T350
(Battery)

Stand–On Rider Scrubber
Parts Manual

Hygenic® Fully Cleanable Recovery Tank
Tennant*True®* Parts
IRIS® a Tennant Technology
Pro–Panel® Controls
Smart–Fill™ Automatic Battery Watering
Insta–Click™ Magnetic Disk

North America / International

For the latest parts manuals and other language Operator manuals, visit:

www.tennantco.com/manuals

9016416
Rev. 08 (6-2024)

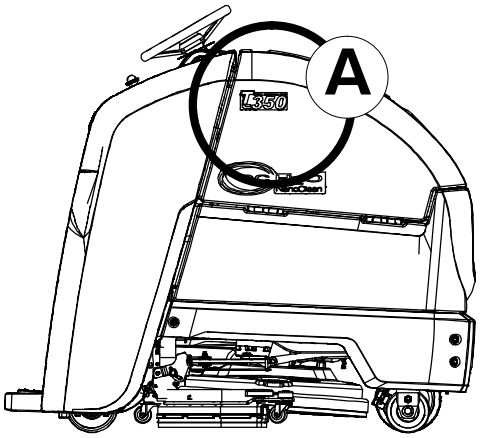

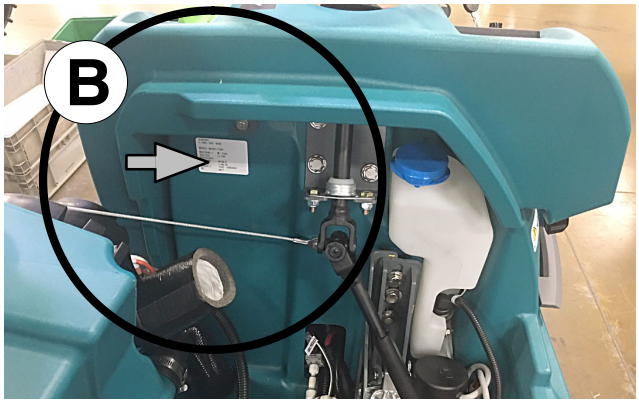

Ref	Part No.	Serial Number	Description	Qty.
1	82681	(100000000–19999999)	Bracket Wldt, Lpg Mount	1
▽ 2	63810	(100000000–19999999)	Latch Assy, Lpg Tank Mtg, W/Nut	4
▲ 3	51839	(100000000–19999999)	Nut Adjustable, Lpg Tank Mtg	2
4	49263	(100000000–19999999)	Tie, Cable	3
5	82556	(100000000–10001564)	Bracket, Vaporizer	1
6	54930	(10000156[illegible]–19999999)	Vaporizer, LPG	1

D

C

EN

HOW TO ORDER PARTS – See diagram above

Only use TENNANT Company supplied or equivalent parts. Parts and supplies may be ordered online, by phone, by fax or by mail.

Follow the steps below to ensure prompt delivery.

1. **(A)** Identify the machine model.
2. **(B)** Identify the machine serial number from the data plate.
3. **(C)** Ensure the proper serial number is used from the parts list.
4. Identify the part number and quantity. Do not order by page or reference numbers.
5. Provide your name, company name, customer ID number, billing and shipping address, phone number and purchase order number.
6. Provide detail shipping instructions.

(D) ▽ – Identifies an assembly
▲ – Identifies parts included in assembly

Please fill out at time of installation for future reference.

Model No. – _____

Serial No. – _____

Machine Options – _____

Sales Rep. – _____

Sales Rep. phone no. – _____

Customer ID Number – _____

Installation Date – _____

Tennant Company
10400 Clean Street
Eden Prairie, MN 55377–2650
Phone: (800) 553–8033
www.tennantco.com

1–STEP, Pro–Membrane, Severe Environment, Zone Settings, and Quiet–Mode are trademarks of Tennant Company.

Trojan® and Hydrolink® are registered trademarks of Trojan Battery Company.

Specifications and parts are subject to change without notice.

Copyright © 2017 – 2019, 2021–2024 TENNANT Company, Printed in U.S.A.

ES

CÓMO SOLICITAR PIEZAS – Consulte el diagrama anterior.

Utilice sólo las piezas suministradas por TENNANT Company o piezas equivalentes. Puede solicitar las piezas a través de internet, por teléfono, por fax o por correo.

Siga los siguientes pasos para que la entrega sea rápida.

1. **(A)** Indique el modelo de máquina.
2. **(B)** Indique el número de serie de la etiqueta de datos.
3. **(C)** Asegúrese de que indica el número de serie correcto de la lista de piezas.
4. Indique la cantidad y el número de la pieza.
   No realice el pedidoindicando el número de página o el de referencia.
5. Incluya su nombre, el nombre de la empresa, el ID de cliente, las direcciones de envío y facturación, el número de teléfono y el número del pedido de compra.
6. Facilite instrucciones de envío.

(D) ▽ – identifica un conjunto
▲ – identifica piezas de un conjunto

Rellene estos datos cuando realice la instalación para utilizarlos como referencia en el futuro.

Nº modelo – _____

Nº serie – _____

Opciones de la máquina – _____

Vendedor – _____

Nº teléfono vendedor – _____

Nº cliente – _____

Fecha de instalación – _____

FR

COMMENT COMMANDER DES PIÈCES DÉTACHÉES – Voir le schéma ci–dessus.

Utilisez uniquement des pièces fournies par la société TENNANT ou équivalentes. Les pièces et fournitures peuvent être commandées en ligne, par téléphone, fax, ou par courrier.

Suivez les étapes ci–dessous pour assurer une livraison rapide.

1. **(A)** Identifiez le modèle de la machine.
2. **(B)** Identifiez le numéro de série de la machine, à partir de l'étiquette signalétique.
3. **(C)** Assurez–vous que le numéro de série correct est utilisé à partir de la liste de pièces détachées.
4. Identifiez le numéro de pièce et la quantité. Ne commandez pas par page ou numéros de référence.
5. Fournissez votre nom, le nom de votre société, votre numéro d'identification de client, l'adresse de facturation et d'expédition, le numéro de téléphone et le numéro du bon de commande.
6. Fournissez des instructions d'expédition détaillées.

(D) ▽ – identifie un assemblage
▲ – identifie les pièces composant l'assemblage

A remplir au moment de l'installation à titre de référence.

Nº du modèle – _____

Nº de série – _____

Options de la machine – _____

Agent commercial – _____

Nº tél. de l'agent commercial – _____

Numéro d'identification client – _____

Date d'installation – _____

General Recommended Maintenance Items

	Ref.	Part No.	Serial Number	Description	Qty.
▽		9016732	(00000000–)	Parts Kit, Maint, Afmkt 500Mm [T350]	1
▲		1207357	(00000000–)	Tray, Debris, Tank, Recvy [T300]	1
▲		1226410	(00000000–)	Hose Assy, W/2cuff, 1.5d 42.5l, Pvc	1
▲		1226488	(00000000–)	Hose Assy, Drain, 1.5d X 62.2l [Pvc] [Black] (62.2L Stretched/ 40L Relaxed)	1
▲		630052	(00000000–)	Float Shut–Off (2)Ball 1.75d	1
▲		1223124	(00000000–)	Blade, Sqge, Front, 938l, Linatex[500mm]	1
▲		1223125	(00000000–)	Blade, Sqge, Rear, 1007l, Linatex[500mm]	1
▲		1211537	(00000000–)	Filter, In–Line, Pf06/Pf06 080m 2.6l Epd	1
		1055025	(00000000–)	Bumper, Head, 50cm, W/ Bristle Skirt, Im	1
▽		9016742	(00000000–)	Blade Kit, 500Mm, Linatex	1
▲		1223125	(00000000–)	Blade, Sqge, Rear, 1007l, Linatex[500mm]	1
▲		1223124	(00000000–)	Blade, Sqge, Front, 938l, Linatex[500mm]	1
▽		9016741	(00000000–)	Blade Kit, 500Mm, Gum (Option)	1
▲		1227127	(00000000–)	Blade, Sqge, Rear, 1007l, Gum [500mm] (Option)	1
▲		1227126	(00000000–)	Blade, Sqge, Front, 938l, Gum [500mm] (Option)	1
▽		9016743	(00000000–)	Blade Kit, 500Mm, Urethane (Option)	1
▲		1227125	(00000000–)	Blade, Sqge, Rear, 1007l, Urethane 500mm (Option)	1
▲		1227124	(00000000–)	Blade, Sqge, Front, 938l, Urethane 500mm (Option)	1
▽		9016733	(00000000–)	Parts Kit, Maint, Afmkt 600Mm [T350]	1
▲		1207357	(00000000–)	Tray, Debris, Tank, Recvy [T300]	1
▲		1226410	(00000000–)	Hose Assy, W/2cuff, 1.5d 42.5l, Pvc	1
▲		1226488	(00000000–)	Hose Assy, Drain, 1.5d X 62.2l [Pvc] [Black] (62.2L Stretched/ 40L Relaxed)	1
▲		630052	(00000000–)	Float Shut–Off (2)Ball 1.75d	1
▲		1222960	(00000000–)	Blade, Sqge, Front, 813l, Linatex[600mm]	1
▲		1222961	(00000000–)	Blade, Sqge, Rear, 861l, Linatex[600mm]	1
▲		1211537	(00000000–)	Filter, In–Line, Pf06/Pf06 080m 2.6l Epd	1
		9011849	(00000000–)	Bumper, Head, 60cm, Bristle Skirt	1
		1055305	(00000000–)	Belt, Drive, 6pj, Ej139 [T3]	1
▽		9016745	(00000000–)	Blade Kit, 600Mm, Linatex	1
▲		1222961	(00000000–)	Blade, Sqge, Rear, 861l, Linatex[600mm]	1
▲		1222960	(00000000–)	Blade, Sqge, Front, 813l, Linatex[600mm]	1
▽		9016744	(00000000–)	Blade Kit, 600Mm, Gum (Option)	1
▲		1227131	(00000000–)	Blade, Sqge, Rear, 861L, Gum 600mm (Option)	1
▲		1227130	(00000000–)	Blade, Sqge, Front, 813l, Gum 600mm (Option)	1
▽		9016746	(00000000–)	Blade Kit, 600Mm, Urethane (Option)	1
▲		1227129	(00000000–)	Blade, Sqge, Rear, 861L, Urethane 600mm (Option)	1
▲		1227128	(00000000–)	Blade, Sqge, Front, 813l, Urethane 600mm (Option)	1
▽		9016804	(00000000–)	Cable Kit, Tools, Installation, Steering	1
▲▽		9016803	(00000000–)	Cable Kit, Steering	1
▲▲		1231914	(00000000–)	Cable, Steering, Top	1
▲▲		1231915	(00000000–)	Cable, Steering, Bottom	1
▲▲		1034731	(00000000–)	Screw, Hex, M6 X 1.00 X 16, Sems, Ss	2
▲▲		44961	(00000000–)	Tie, Cable, Nyl, 14.5l .30w 4.0 Max D	1
▲▽		9016802	(00000000–)	Tool Kit, Installation, Steering	1
▲▲		1233471	(00000000–)	Gauge, Tension, Cable	1
▲▲		1234220	(00000000–)	Rod, Alignment, Wheel	1

▽ ASSEMBLY
▲ INCLUDED IN ASSEMBLY

SECTION 2

Contents **Page**

Fig. 1 – Brushes and Pad Driver Group, 500MM Disk 3–Lug Hub 2-2
Fig. 2 – Brushes and Pad Driver Group, 500MM Disk Magnetic Hub 2-4
Fig. 3 – Brushes and Pad Driver Group, 600MM Disk 3–Lug Hub 2-6
Fig. 4 – Brushes and Pad Driver Group, 600MM Magnetic Hub 2-8
Fig. 5 – Main Frame and Rear Wheel Group . . . 2-10
Fig. 6 – Drive Wheel Group 2-12
Fig. 7 – Steering Cables and Pivot Wheel Group 2-16
Fig. 8 – Instrument Panel and Steering Group . . 2-18
Fig. 9 – Operator Compartment Group 2-20
Fig. 10 – Operator Platform Group 2-22
Fig. 11 – Scrub Head Lift Group 2-24
Fig. 12 – Scrub Head Linkage Group, 500 MM Disk 2-26
Fig. 13 – Scrub Head Group, 500 MM, Magnetic Hub 2-28
Fig. 14 – Scrub Head Group, 500MM, 3–Lug Hub 2-30
Fig. 15 – Squeegee Group, 500MM 2-32
Fig. 16 – Squeegee Rail Group, 500 MM 2-34
Fig. 17 – Scrub Head Linkage Group, 600 MM Disk 2-36
Fig. 18 – Scrub Head Group, 600 MM, Magnetic Hub 2-38
Fig. 19 – Scrub Head Group, 600MM, 3–Lug Hub 2-40
Fig. 20 – Squeegee Group, 600MM 2-42
Fig. 21 – Squeegee Rail Group, 600 MM Disk . . 2-46
Fig. 22 – Recovery Tank Group 2-48
Fig. 23 – Vacuum Fan Group 2-50
Fig. 24 – Solution Tank Group 2-52
Fig. 25 – Electrical Box Group 2-54
Fig. 26 – Electrical Group 2-56
Fig. 27 – Electrical Schematic 2-58
Fig. 28 – Electical Wire Harnesses Group 2-63
Fig. 29 – Label Group (With Text) 2-78
Fig. 30 – Label Group (Textless Labels) 2-80

Fig. 1 – Brushes and Pad Driver Group, 500MM Disk 3–Lug Hub

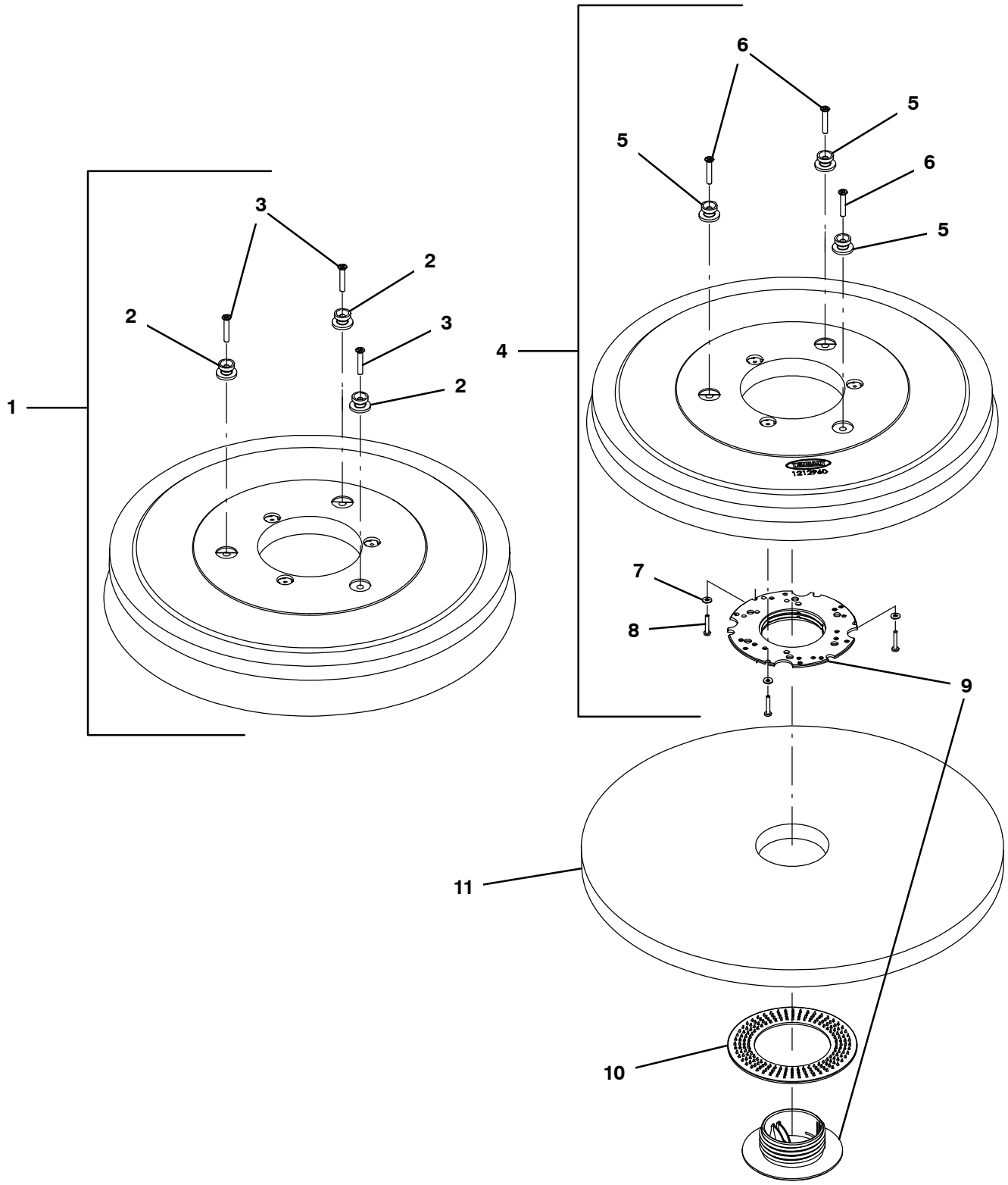

356779

Fig. 1 – Brushes and Pad Driver Group, 500MM Disk 3–Lug Hub

	Ref.	Part No.	Serial Number	Description	Qty.
∇	1	1016805	(00000000–)	Brush Assy, Disk, Scb, 20.0d, Abrasive	1
▲	2	1013018	(00000000–)	Stud, Drive, Brush Pad	3
▲	3	1021316	(00000000–)	Screw, Flt, Phl, M6 X 1.00 X 35, Ss	3
∇	1	1016810	(00000000–)	Brush Assy, Disk, Scb, 20.0d, Nylon	1
▲	2	1013018	(00000000–)	Stud, Drive, Brush Pad	3
▲	3	1021316	(00000000–)	Screw, Flt, Phl, M6 X 1.00 X 35, Ss	3
∇	1	1016811	(00000000–)	Brush Assy, Disk, Scb, 20.0d, Polypropylene	1
▲	2	1013018	(00000000–)	Stud, Drive, Brush Pad	3
▲	3	1021316	(00000000–)	Screw, Flt, Phl, M6 X 1.00 X 35, Ss	3
∇	4	1212960	(00000000–)	Driver Assy, Pad, 50cm, Brush, 3 Lug	1
▲	5	1013018	(00000000–)	Stud, Drive, Brush Pad	3
▲	6	1021316	(00000000–)	Screw, Flt, Phl, M6 X 1.00 X 35, Ss	3
▲	7	41579	(00000000–)	Washer, Flat, 08, Ss	3
▲	8	04403	(00000000–)	Screw, Pan, Phl, M4 X 0.70 X 25, Nl, Ss	3
▲	9	32506	(00000000–)	Device, Centering, Rh Pad Retainer	1
	10	32505	(00000000–)	Washer, Flat, 92b 156d 2.6l, Pad Driver	1
	11	17260	(00000000–)	Pad, Polish, 20.0d, White [1pick=1pad]	1
	11	17261	(00000000–)	Pad, Buff, 20.0d, Red [1pick=1pad]	1
	11	17262	(00000000–)	Pad, Scb, 20.0d, Blu [1pick=1pad]	1
	11	17263	(00000000–)	Pad, Stripping, 20.0d, Brown[1pick=1pad]	1
	11	370094	(00000000–)	Pad, Stripping, 20.0d[Hi Prod,1pick=1pad	1
	11	1051030	(00000000–)	Pad, Surf Prep, 20.0d [Mar, 1pick=1pad]	1

∇ Assembly

▲ Included in Assembly

Fig. 2 – Brushes and Pad Driver Group, 500MM Disk Magnetic Hub

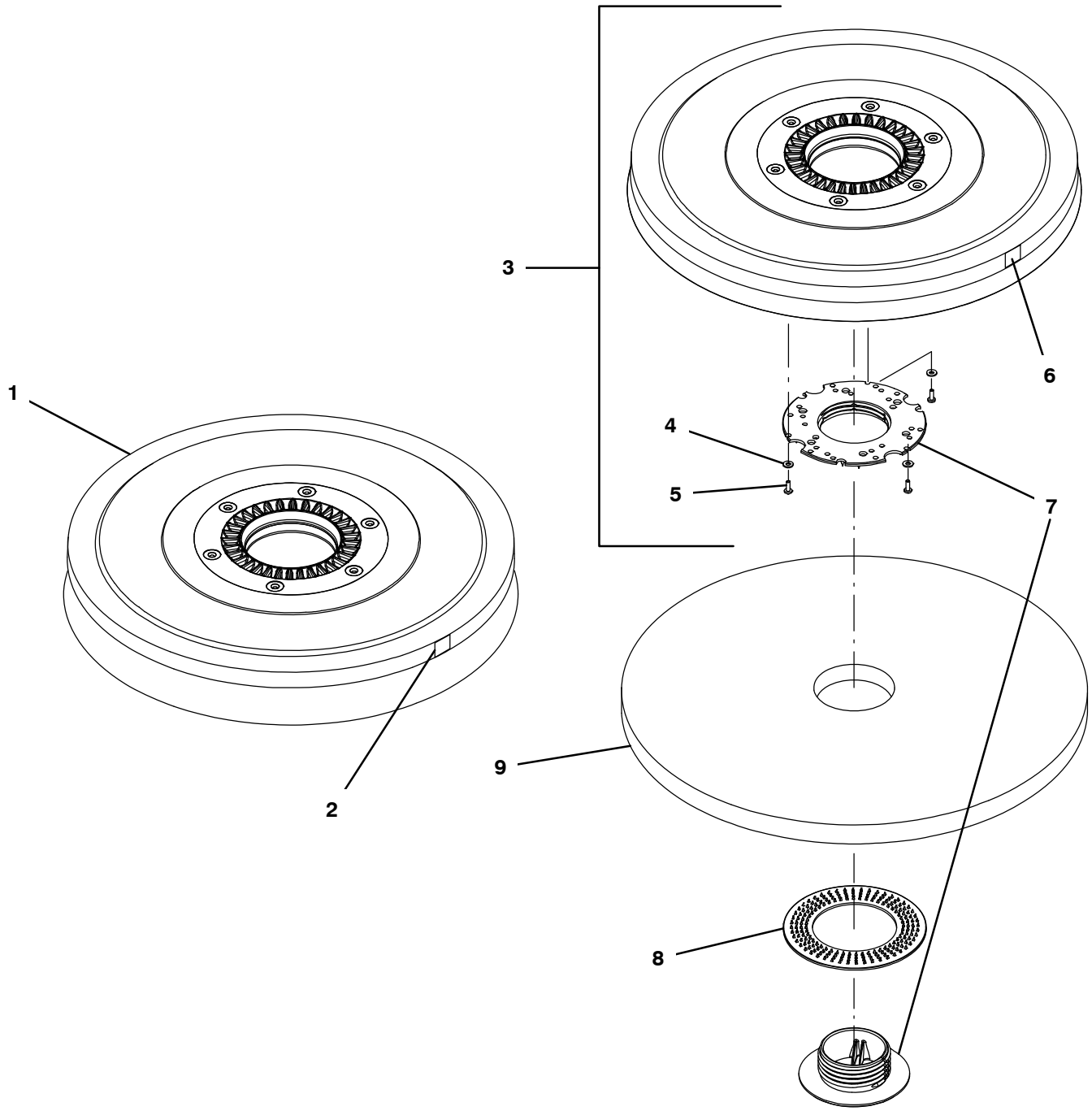

356780

Fig. 2 – Brushes and Pad Driver Group, 500MM Disk Magnetic Hub

	Ref.	Part No.	Serial Number	Description	Qty.
∇	1	1210386	(00000000–)	Brush Assy, Disk, Scb, 50cm, Mag, Nylon	1
▲	2	1218392	(00000000–)	Label, Safety, Magnet, Med	1
∇	1	1213032	(00000000–)	Brush Assy, Disk, Scb, 50cm, Mag, Polypropylene	1
▲	2	1218392	(00000000–)	Label, Safety, Magnet, Med	1
∇	1	1213033	(00000000–)	Brush Assy, Disk, Scb, 50cm, Mag, Abrasive	1
▲	2	1218392	(00000000–)	Label, Safety, Magnet, Med	1
∇	3	1209197	(00000000–)	Driver Assy, Pad, 50cm, Brush, Magnetic	1
▲	4	41579	(00000000–)	Washer, Flat, 08, Ss	3
▲	5	1212542	(00000000–)	Screw, Pan, Phl, M4 X 0.70 X 12, Nl, Ss	3
▲	6	1218392	(00000000–)	Label, Safety, Magnet, Med	1
▲	7	32506	(00000000–)	Device, Centering, Rh Pad Retainer	1
	8	32505	(00000000–)	Washer, Flat, 92b 156d 2.6l, Pad Driver	1
	9	17260	(00000000–)	Pad, Polish, 20.0d, White [1pick=1pad]	1
	9	17261	(00000000–)	Pad, Buff, 20.0d, Red [1pick=1pad]	1
	9	17262	(00000000–)	Pad, Scb, 20.0d, Blu [1pick=1pad]	1
	9	17263	(00000000–)	Pad, Stripping, 20.0d, Brown[1pick=1pad]	1
	9	370094	(00000000–)	Pad, Stripping, 20.0d[Hi Prod,1pick=1pad	1
	9	1051030	(00000000–)	Pad, Surf Prep, 20.0d [Mar, 1pick=1pad]	1

∇ Assembly

▲ Included in Assembly

Fig. 3 – Brushes and Pad Driver Group, 600MM Disk 3–Lug Hub

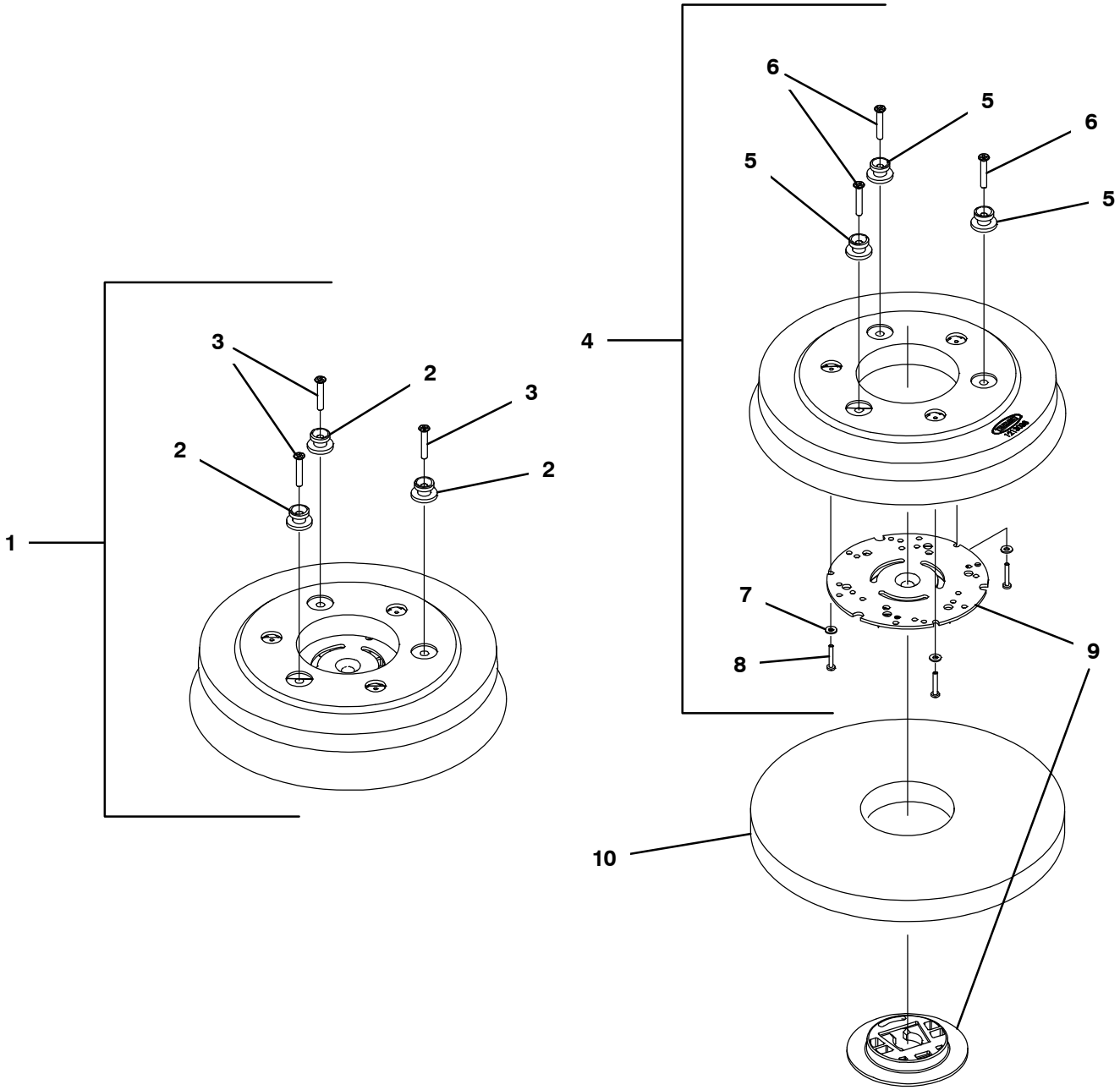

356781

Fig. 3 – Brushes and Pad Driver Group, 600MM Disk 3–Lug Hub

	Ref.	Part No.	Serial Number	Description	Qty.
∇	1	1056306	(00000000–)	Brush Assy, Disk, Scb, 12.0d, 3–Lug, Nylon	2
▲	2	1055558	(00000000–)	Mount, Lug, Pad—Driver [T3]	3
▲	3	1021316	(00000000–)	Screw, Flt, Phl, M6 X 1.00 X 35, Ss	3
∇	1	1056313	(00000000–)	Brush Assy, Disk, Scb, 12.0d, 3–Lug, Polypropylene	2
▲	2	1055558	(00000000–)	Mount, Lug, Pad—Driver [T3]	3
▲	3	1021316	(00000000–)	Screw, Flt, Phl, M6 X 1.00 X 35, Ss	3
∇	1	1063297	(00000000–)	Brush Assy, Disk, Scb, 12.0d, 3–Lug, Abrasive	2
▲	2	1055558	(00000000–)	Mount, Lug, Pad—Driver [T3]	3
▲	3	1021316	(00000000–)	Screw, Flt, Phl, M6 X 1.00 X 35, Ss	3
∇	4	1213038	(00000000–)	Driver Assy, Pad, 30cm, Brush, 3 Lug	2
▲	5	1055558	(00000000–)	Mount, Lug, Pad—Driver [T3]	3
▲	6	1021316	(00000000–)	Screw, Flt, Phl, M6 X 1.00 X 35, Ss	3
▲	7	41579	(00000000–)	Washer, Flat, 08, Ss	3
▲	8	04403	(00000000–)	Screw, Pan, Phl, M4 X 0.70 X 25, Nl, Ss	3
▲	9	370095	(00000000–)	Device, Centering, Clip On, Tl [Gf Pp]	1
	10	385940	(00000000–)	Pad, Polish, 12.0d, White [1pick=1pad]	2
	10	385941	(00000000–)	Pad, Buff, 12.0d, Red [1pick=1pad]	2
	10	385942	(00000000–)	Pad, Scb, 12.0d, Blu [1pick=1pad]	2
	10	385943	(00000000–)	Pad, Stripping, 12.0d, Brown[1pick=1pad]	2
	10	1063334	(00000000–)	Pad, Stripping, 12.0d [Hi–Prod] Blk	2
	10	1051020	(00000000–)	Pad, Surf Prep, 12.0d [Mar, 1pick=1pad]	2

∇ Assembly

▲ Included in Assembly

Fig. 4 – Brushes and Pad Driver Group, 600MM Magnetic Hub

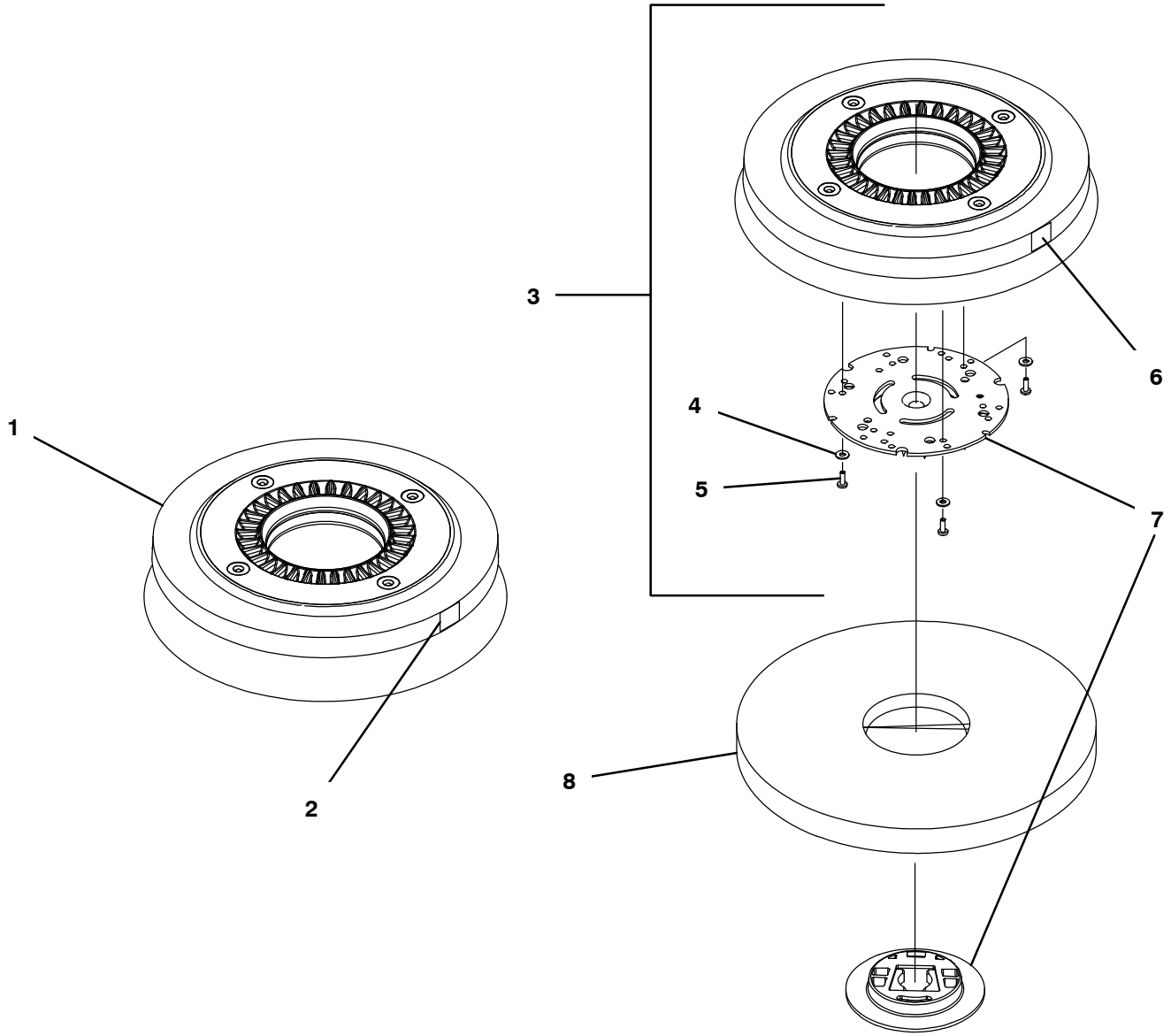

356782

Fig. 4 – Brushes and Pad Driver Group, 600MM Magnetic Hub

	Ref.	Part No.	Serial Number	Description	Qty.
∇	1	1210136	(00000000–)	Brush Assy, Disk, Scb, 30cm, Mag, Nylon	2
▲	2	1218392	(00000000–)	Label, Safety, Magnet, Med	1
∇	1	1213040	(00000000–)	Brush Assy, Disk, Scb, 30cm, Mag, Polypropylene	2
▲	2	1218392	(00000000–)	Label, Safety, Magnet, Med	1
∇	1	1213041	(00000000–)	Brush Assy, Disk, Scb, 30cm, Mag, Abrasive	2
▲	2	1218392	(00000000–)	Label, Safety, Magnet, Med	1
∇	3	1209160	(00000000–)	Driver Assy, Pad, 30cm, [Magnetic]	2
▲	4	41579	(00000000–)	Washer, Flat, 08, Ss	3
▲	5	1212542	(00000000–)	Screw, Pan, Phl, M4 X 0.70 X 12, Nl, Ss	3
▲	6	1218392	(00000000–)	Label, Safety, Magnet, Med	1
▲	7	370095	(00000000–)	Device, Centering, Clip On, Tl [Gf Pp]	1
	8	385940	(00000000–)	Pad, Polish, 12.0d, White [1pick=1pad]	2
	8	385941	(00000000–)	Pad, Buff, 12.0d, Red [1pick=1pad]	2
	8	385942	(00000000–)	Pad, Scb, 12.0d, Blu [1pick=1pad]	2
	8	385943	(00000000–)	Pad, Stripping, 12.0d, Brown[1pick=1pad]	2
	8	1063334	(00000000–)	Pad, Stripping, 12.0d [Hi–Prod] Blk	2
	8	1051020	(00000000–)	Pad, Surf Prep, 12.0d [Mar, 1pick=1pad]	2

∇ Assembly

▲ Included in Assembly

Fig. 5 – Main Frame and Rear Wheel Group

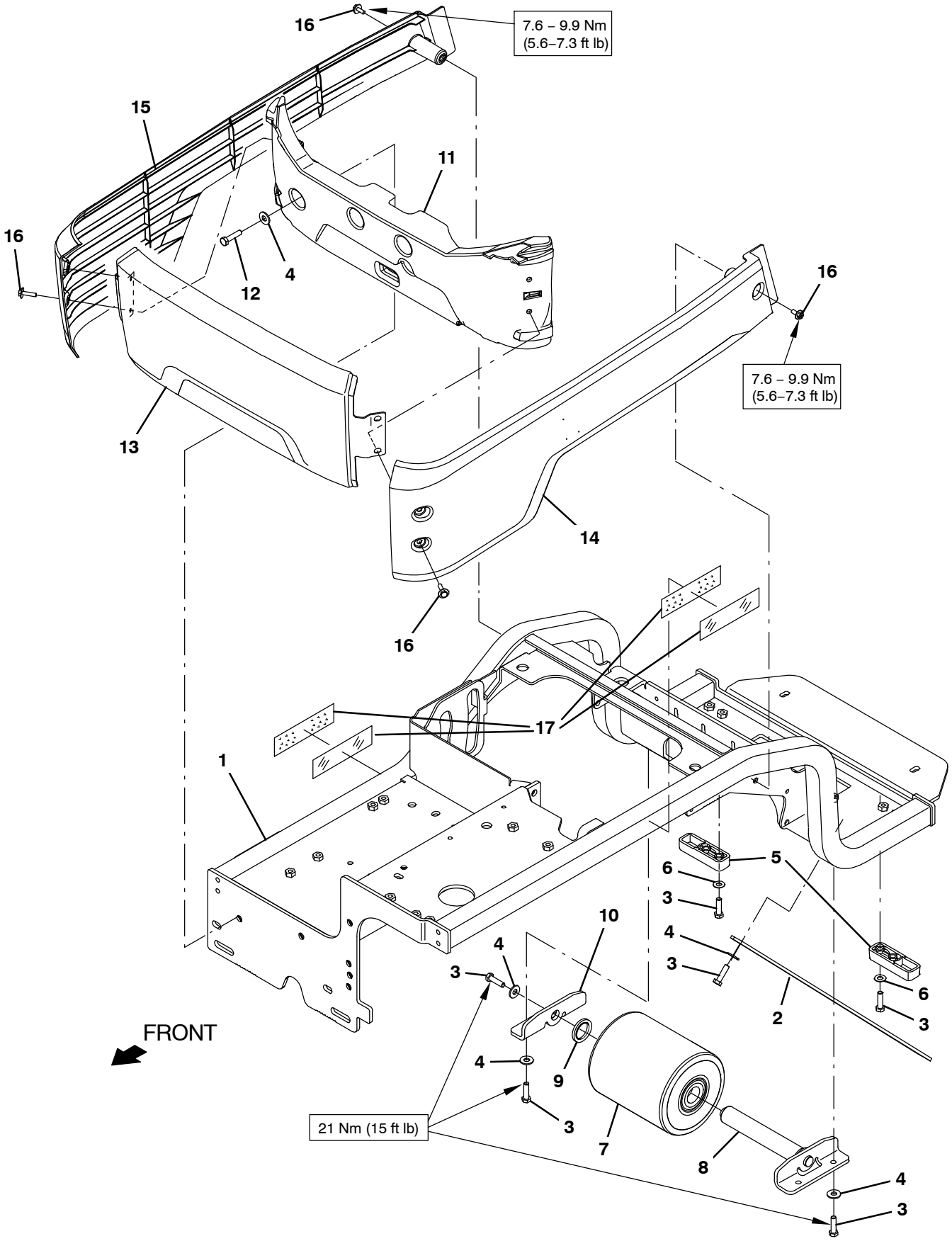

356728

Fig. 5 – Main Frame and Rear Wheel Group

Ref.	Part No.	Serial Number	Description	Qty.
1	1223531	(00000000–)	Frame Wldt, Main [T350]	1
2	71579	(00000000–)	Strap, Static, W/Grommet, .19 1.1w 25.0l	1
3	1016399	(00000000–)	Screw, Hex, M8 X 1.25 X 30, Nl, Ss	10
4	01685	(00000000–)	Washer, Flat, 0.38b 0.88d .08, Ss	10
5	1226462	(00000000–)	Leg, Tip	2
6	140027	(00000000–)	Washer, Flat, 0.35b 0.75d .04, Ss	4
7	1234678	(00000000–)	Wheel, 05.9D 6.89W 1.18B, W/Brg	1
8	1224420	(00000000–)	Axle Wldt, Wheel, Rear	1
9	1224418	(00000000–)	Spacer, 1.19b 1.63d 0.17t, Pl	1
10	1223970	(00000000–)	Bracket, Sppt, Frame	1
11	1231987	(00000000–)	Counterweight [Mach]	1
12	09023	(00000000–)	Screw, Hex, M8 X 1.25 X 35, Fl, Ss	4
13	1224809	(00000000–)	Shroud, Frame, Front	1
14	1224810	(00000000–)	Shroud, Frame, Lh	1
15	1224811	(00000000–)	Shroud, Frame, Rh	1
16	1034731	(00000000–)	Screw, Hex, M6 X 1.00 X 16, Sems, Ss	6
17	370121	(00000000–)	Fastener, 12.00L [Hook & Loop]	1

Fig. 6 – Drive Wheel Group

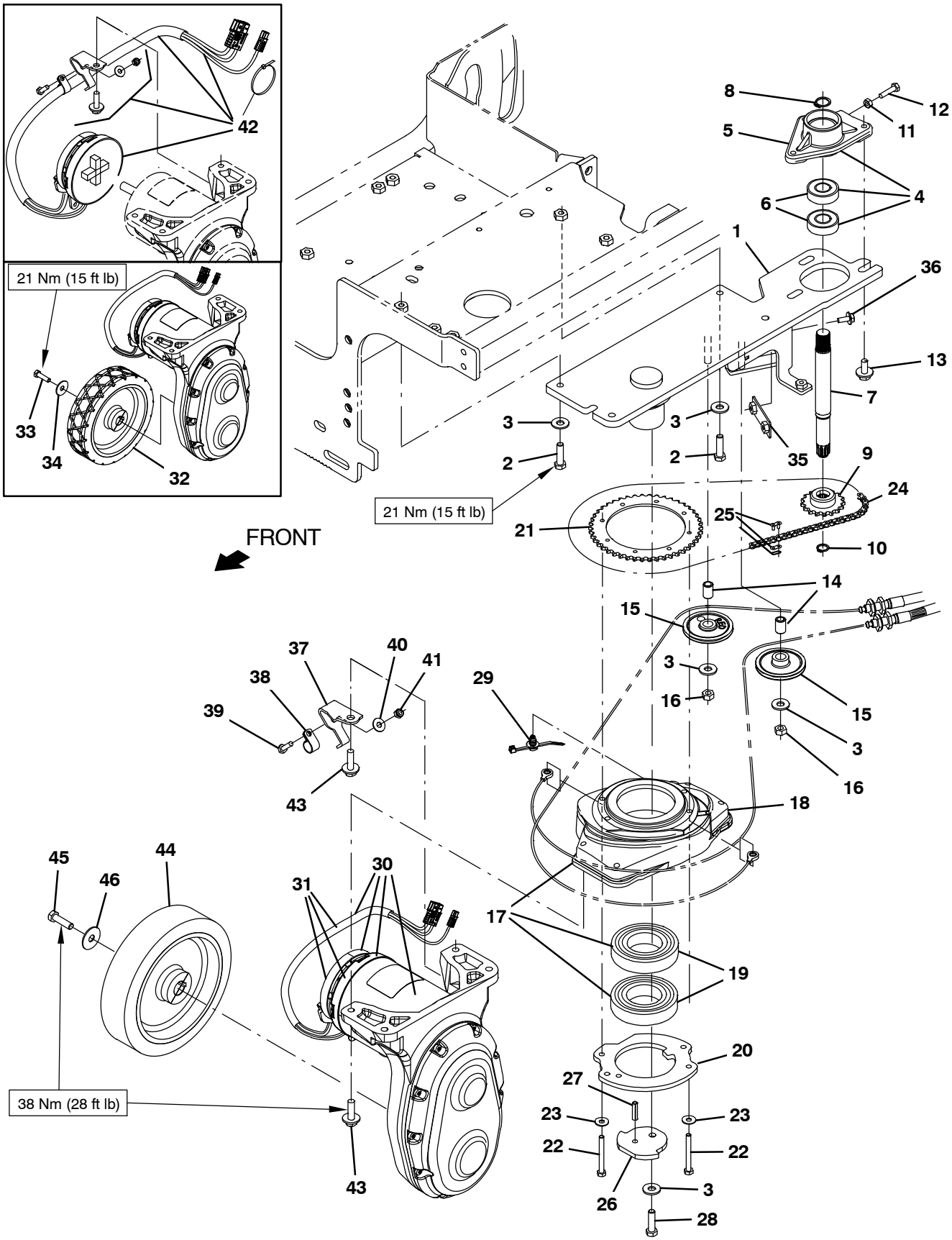

356729

Fig. 6 – Drive Wheel Group

	Ref.	Part No.	Serial Number	Description	Qty.
	1	1232101	(00000000–)	Plate, Steering [Machined]	1
	2	1016399	(00000000–)	Screw, Hex, M8 X 1.25 X 30, Nl, Ss	5
	3	01685	(00000000–)	Washer, Flat, 0.38b 0.88d .08, Ss	8
▽	4	9016818	(00000000–)	Housing Kit, Bearing, Input, Ci	1
▲	5	1224075	(00000000–)	Housing, Bearing, Input	1
▲	6	86041	(00000000–)	Bearing, Ball, 0.67b 1.57d 0.47w	2
	7	1224461	(00000000–)	Shaft, Steering, Input	1
	8	1208985	(00000000–)	Ring, Retaining, Ext, 16.2mm Id, Hd	1
	9	1225247	(00000000–)	Sprocket, 35, 17tooth, 0.62w, Spl	1
	10	70717	(00000000–)	Ring, Retaining, Ext, 0.50d, Hd	1
	11	07785	(00000000–)	Nut, Hex, Std, M6 X 1.00, Ss	1
	12	09007	(00000000–)	Screw, Hex, M6 X 1.00 X 25, Ss	1
	13	1020341	(00000000–)	Screw, Hex, M8 X 1.25 X 20, Ss, Sems	3
	14	360930	(00000000–)	Sleeve, P/M, 0.32b 0.50d 0.8l [430ss]	2
	15	1230963	(00000000–)	Guide, Cable, Plstc	2
	16	07786	(00000000–)	Nut, Hex, Std, M8 X 1.25, Ss	2
▽	17	9016819	(00000000–)	Housing Kit, Brg, Pulley, Steering, Ci	1
▲	18	1231279	(00000000–)	Housing, Brg, Pulley, Steering	1
▲	19	1225863	(00000000–)	Bearing, Ball, 1.77b 3.35d 0.76w	2
	20	1227112	(00000000–)	Plate, Retainer, Brg	1
	21	1224071	(00000000–)	Sprocket, 35, 46tooth, 3.976b	1
	22	58979	(00000000–)	Screw, Hex, M6 X 1.00 X 55, Fl, Ss	4
	23	01684	(00000000–)	Washer, Flat, 0.27b 0.69d .05, Ss	4
	24	1224061	(00000000–)	Chain, Rlr, 35 X 98 Pitches	1
	25	14799	(00000000–)	Link, Chain, Rlr, 35	1
	26	1224066	(00000000–)	Plate, Mtg, Steering	1
	27	23999–4	(00000000–)	Pin, Roll, .250d X 1.00l, .250/.256	1
	28	1016399	(00000000–)	Screw, Hex, M8 X 1.25 X 30, Nl, Ss	1
	29	1210807	(00000000–)	Wire, Tie [W/.25” Fir Tree Clip]	1
▽	30	1217648	(00000000–10903155)	Drive Assy, Wheel, Front (Replaced By 9017772)	1
▲		1235230	(00000000–10903155)	Brush Kit, Carbon [1 Pac = 4 Pcs]	1
▲		1235231	(00000000–10903155)	Brake, Parking, Kit	1
▽	30	1238284	(10903156–11025502)	Drive Assy, Wheel, Front (Replaced By 9017772)	1
▲		1235230	(10903156–11025502)	Brush Kit, Carbon [1 Pac = 4 Pcs]	1
▲		1235231	(10903156–11025502)	Brake, Parking, Kit	1
▲	31	9017775	(10903156–11025502)	Harness Kit, Drive	4
▽	30	1252245	(11025503–)	Drive Assy, Wheel, Front	1
▲		1235230	(11025503–)	Brush Kit, Carbon [1 Pac = 4 Pcs]	1
▲		1235231	(11025503–)	Brake, Parking, Kit	1
▲	31	9017775	(11025503–)	Harness Kit, Drive	4

CONTINUED

▽ Assembly
▲ Included in Assembly

Fig. 6 – Drive Wheel Group

Ref.	Part No.	Serial Number	Description	Qty.
32	1224132	(00000000–11025502)	Wheel, Drive, 190mmd 50mmw 19mmb	1
33	1016399	(00000000–11025502)	Screw, Hex, M8 X 1.25 X 30, Nl, Ss	1
34	32662	(00000000–11025502)	Washer, Flat, 0.38b 1.22d .06, Ss	1
35	1232244	(00000000–)	Plate Wldt, Keeper, Cable	1
36	1034731	(00000000–)	Screw, Hex, M6 X 1.00 X 16, Sems, Ss	2
37	1239387	(10903156–)	Bracket, Sppt, Harness	1
38	26395–1	(10903156–)	Clamp, Cable, Stl, 0.56d X 0.38w, 1hole	1
39	08716	(10903156–)	Screw, Hex, M6 X 1.00 X 20, Ss	1
40	01684	(10903156–)	Washer, Flat, 0.27b 0.69d .05, Ss	1
41	08712	(10903156–)	Nut, Hex, Lock, M6 X 1.00, Nl, Ss	1
42	9017775	(00000000–10903155)	Harness Kit, Drive (Upgrade Kit for 1217648)	1
43	1072816	(00000000–)	Screw, Hex, M8 X 1.25 X 30, Ss, Sems	4
44	1253390	(11025503–)	Wheel, Drive, 190Mmd 54.5Mmw 24.9Mmb	1
45	09770	(11025503–)	Screw, Hex, M10 X 1.50 X 25, Nl, Ss	1
46	1014563	(11025503–)	Washer, Flat, 0.40B 1.12D .12, Ss	1

∇ Assembly

▲ Included in Assembly

Fig. 7 – Steering Cables and Pivot Wheel Group

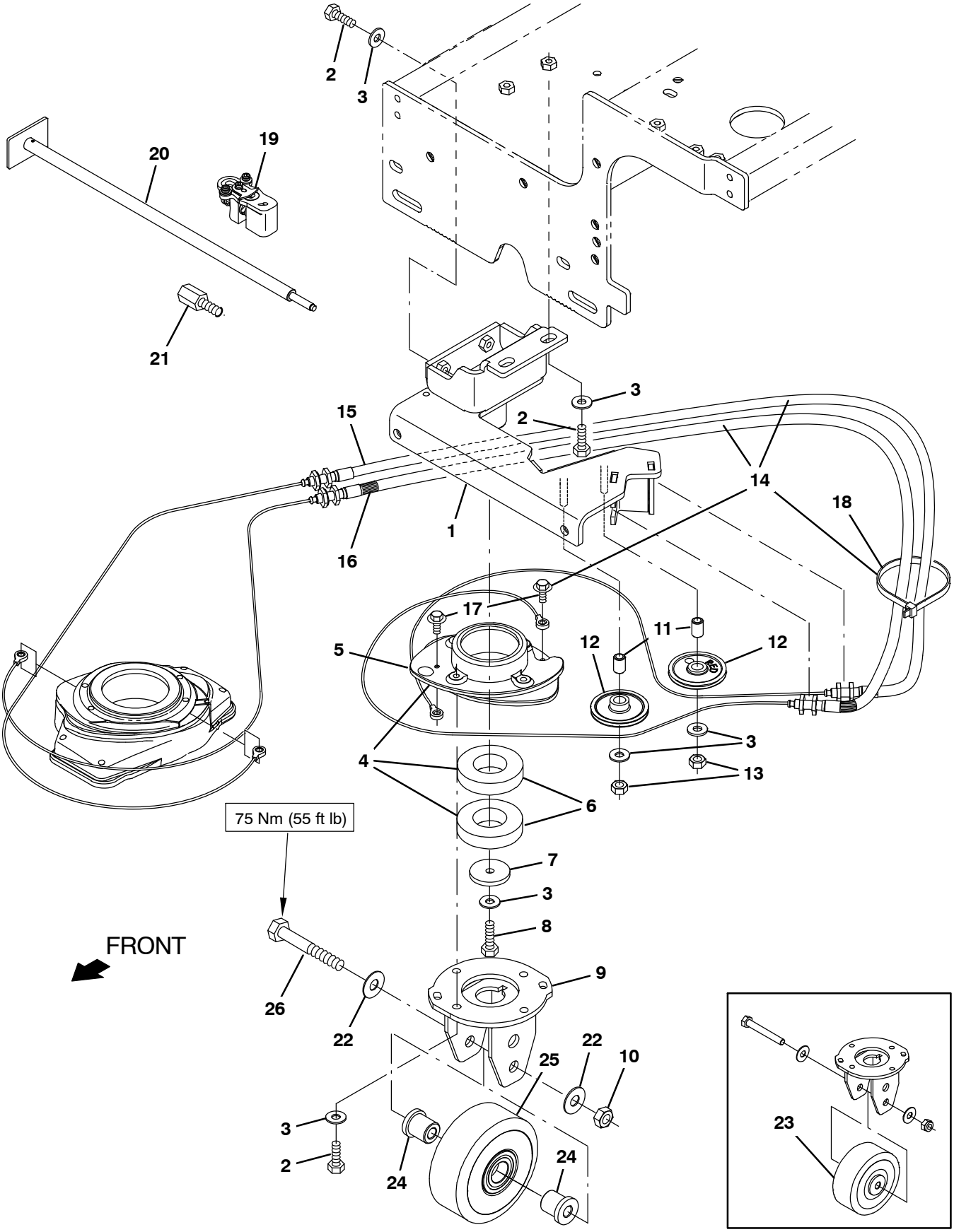

356730

Fig. 7 – Steering Cables and Pivot Wheel Group

	Ref.	Part No.	Serial Number	Description	Qty.
	1	1231265	(00000000–)	Mount Wldt, Wheel, Rh	1
	2	09010	(00000000–)	Screw, Hex, M8 X 1.25 X 25, Ss	10
	3	01685	(00000000–)	Washer, Flat, 0.38b 0.88d .08, Ss	13
▽	4	9016820	(00000000–)	Housing Kit, Bearing, Rh, Ci	1
▲	5	1231084	(00000000–)	Housing, Bearing, Rh	1
▲	6	24899	(00000000–)	Bearing, Ball, 1.38b 2.83d 0.67w	2
	7	1230109	(00000000–)	Plate, Mtg, Steering	1
	8	1016399	(00000000–)	Screw, Hex, M8 X 1.25 X 30, Nl, Ss	1
	9	1230131	(00000000–)	Retainer Wldt, Brg	1
	10	08711	(00000000–)	Nut, Hex, Lock, M12 X 1.75, Nl	1
	11	360930	(00000000–)	Sleeve, P/M, 0.32b 0.50d 0.8l [430ss]	2
	12	1230963	(00000000–)	Guide, Cable, Plstc	2
	13	07786	(00000000–)	Nut, Hex, Std, M8 X 1.25, Ss	2
▽		9016804	(00000000–)	Cable Kit, Tools, Installation, Steering	1
▲▽	14	9016803	(00000000–)	Cable Kit, Steering	1
▲▲	15	1231914	(00000000–)	Cable, Steering, Top (Requires tool kit 9016802)	1
▲▲	16	1231915	(00000000–)	Cable, Steering, Bottom (Requires tool kit 9016802)	1
▲▲	17	1034731	(00000000–)	Screw, Hex, M6 X 1.00 X 16, Sems, Ss	2
▲▲	18	44961	(00000000–)	Tie, Cable, Nyl, 14.5l .30w 4.0 Max D	1
▲▽		9016802	(00000000–)	Tool Kit, Installation, Steering	1
▲▲	19	1233471	(00000000–)	Gauge, Tension, Cable	1
▲▲	20	1234220	(00000000–)	Rod, Alignment, Wheel	1
▲▲	21	1265271	(00000000–)	Fitting, Adapter M8x1.25 Fem/M10x1.5 Mal	1
	22	140045	(00000000–)	Washer, Flat, 0.51B 1.25D .06, Ss	2
	23	9020908	(00000000–10995775)	Rh Wheel Kit, Afmkt	1
	24	1249504	(10995776–)	Spacer, Axle, Rh Wheel	2
	25	1249473	(10995776–)	Wheel, 5.00D 2.00W 0.98B	1
	26	1233080	(00000000–)	Screw, Hex, M12 X 1.75 X 90, Ss	1

▽ Assembly
▲ Included in Assembly

Fig. 8 – Instrument Panel and Steering Group

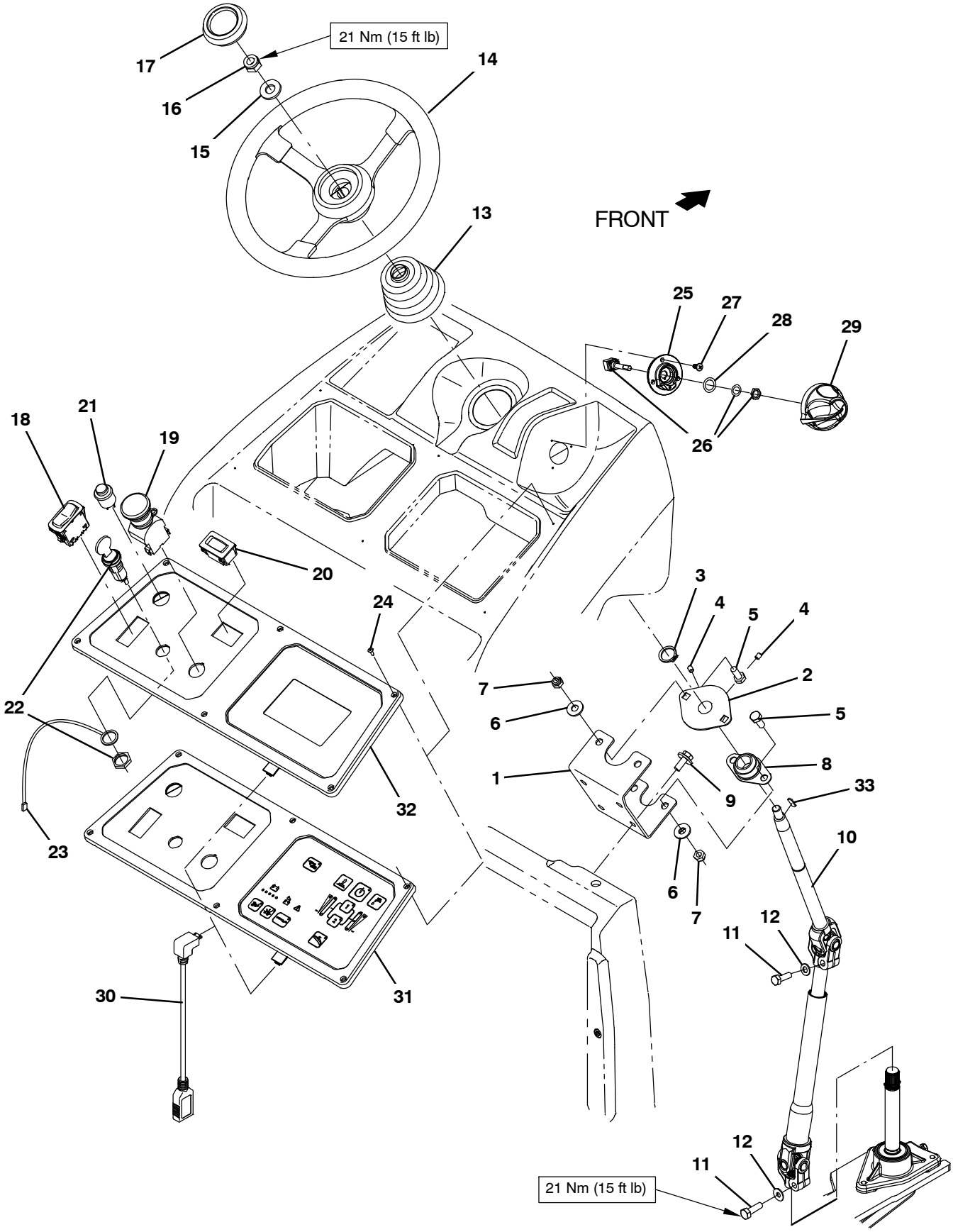

356731

Fig. 8 – Instrument Panel and Steering Group

	Ref.	Part No.	Serial Number	Description	Qty.
	1	1223723	(00000000–)	Bracket, Steering	1
	2	1057554	(00000000–)	Bearing, Flng, 2hole, 0.75b	1
	3	26428	(00000000–)	Ring, Retaining, Ext, 0.75d, Hd	1
	4	09162	(00000000–)	Screw, Set, M6 X 1.00 X 8, Nl	2
	5	16931	(00000000–)	Screw, Hex, M8 X 1.25 X 20, 8.8	4
	6	32491	(00000000–)	Washer, Flat, 0.31, Std	4
	7	08709	(00000000–)	Nut, Hex, Lock, M8 X 1.25, Nl	4
	8	223065	(00000000–)	Bearing, Flng, 2hole, 0.75b [Nyl]	1
	9	1020341	(00000000–)	Screw, Hex, M8 X 1.25 X 20, Ss, Sems	4
	10	9017659	(00000000–10890645)	Shaft Kit, Steering, Replmt [350/SS350]	1
	10	1265162	(10890646–)	Shaft Assy, Steering, T350	1
	11	39277	(00000000–)	Screw, Hex, M8 X 1.25 X 25, 8.8	2
	12	39349	(00000000–)	Washer, Flat, 0.31, Sae	2
	13	1012437	(00000000–)	Bellows, Shaft, Steering	1
	14	1012002	(00000000–)	Wheel, Steering, 300mm	1
	15	64154	(00000000–)	Washer, Flat, 0.53b 1.12d .11, Stl, Pl	1
	16	08711	(00000000–)	Nut, Hex, Lock, M12 X 1.75, Nl	1
	17	1019706	(00000000–)	Cap, Wheel, Steering	1
	18	1223393	(00000000–)	Switch, Rocker, Dpdt, On / None / On	1
	19	1011735	(00000000–)	Switch, Safety, Shutoff	1
	20	1064038	(00000000–)	Gauge, Hourmeter, 05–277 Volt, Ac / Dc	1
	21	1014832	(00000000–)	Switch, Horn	1
∇	22	1011402	(00000000–)	Switch, Key	1
▲		1017696	(00000000–)	Key Set, Replmtm [F/Keyswitch 1011402]	1
	23	1073037	(00000000–)	Harness, Ele [Key Sw.,Static Gnd]	1
	24	140825	(00000000–)	Screw, Pan, Phl, 06 X 0.50, Fmg/Ab, Blk	6
	25	1227247	(00000000–)	Mount, Knob, Spd	1
	26	1229564	(00000000–)	Potentiometer, Cntrl, Spd	1
	27	1018155	(00000000–)	Screw, Pan, Phl, M5 X 0.80 X 16, Tcut,Ss	3
	28	1227248	(00000000–)	Seal, O–Ring, #210, Nbr, Ptfe Coat	1
	29	1226135	(00000000–)	Knob, Spd	1
	30	1228665	(00000000–)	Cable [USB, Mini–B, Male 90D, Female]	1
	31	9040204*	(00000000–11003112)	Control Kit, Membrane, Ci	1
	31	9021345*	(11003113–)	Control Kit, Membrane, Ci	1
	32	9040205*	(00000000–11003112)	Control Kit, Pro–Panl, Ci	1
	32	9021348*	(11003113–)	Control Kit, Pro–Panl, Ci	1
	33	1234681	(00000000–10890645)	Key, Sq, 5Mm X 5Mm X 16Mml	1
	33	1014328	(10890646–)	Key, Sq, 5Mm X 5Mm X 25Mml	1

* Requires Tennant *True* service or an authorized Tennant service provider.

∇ Assembly

▲ Included in Assembly

Fig. 9 – Operator Compartment Group

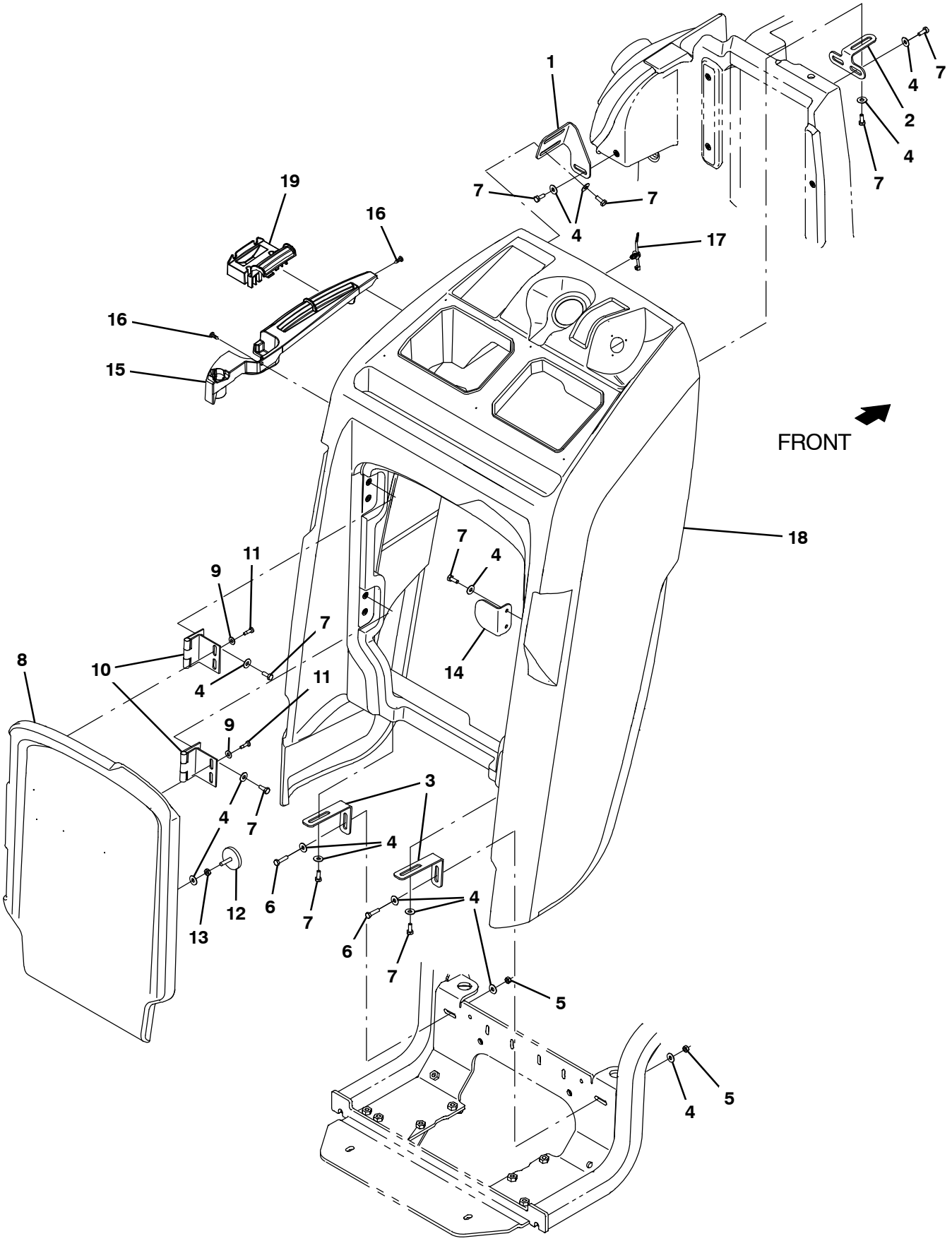

356732

Fig. 9 – Operator Compartment Group

Ref.	Part No.	Serial Number	Description	Qty.
1	1225927	(00000000–)	Bracket, Lh Upper, Op Station	1
2	1225928	(00000000–)	Bracket, Rh Upper, Op Station	1
3	1225929	(00000000–)	Bracket, Lower, Op Station	2
4	01684	(00000000–)	Washer, Flat, 0.27b 0.69d .05, Ss	17
5	07785	(00000000–)	Nut, Hex, Std, M6 X 1.00, Ss	2
6	1016005	(00000000–)	Screw, Hex, M6 X 1.00 X 25, Nl, Fl, Ss	2
7	11329	(00000000–)	Screw, Hex, M6 X 1.00 X 16, Nl, Ss	12
8	9016795	(00000000–)	Door, Access, Oprtr, Ce W/Labels (W/ Textless Labels)	1
8	9016796	(00000000–)	Door, Access, Oprtr, Na W/Labels	1
9	19066	(00000000–)	Washer, Flat, 0.25b 0.56d .05, Pl, 10	4
10	1209466	(00000000–)	Hinge, 6mm Pin 2.5 73.5mmw 60.0mml, Bent	2
11	1043573	(00000000–)	Screw, #10–14 X 0.675, Spl[Shcs,Selftap]	4
12	1202779	(00000000–)	Magnet, Latch, Brush Door	1
13	32520	(00000000–)	Nut, Hex, Jam, .25–20	1
14	1225926	(00000000–)	Bracket, Magnet	1
15	1237554	(00000000–)	Rail, Accessory [T350]	1
16	1018155	(00000000–)	Screw, Pan, Phl, M5 X 0.80 X 16, Tcut,Ss	2
17	1210807	(00000000–)	Wire, Tie [W/.25” Fir Tree Clip]	4
18	1224747	(00000000–)	Shroud, Oprtr, Trimmed, Rm–Tl	1
18	9016798	(00000000–)	Shroud, Oprtr, Trimmed, Rm–Tl, Ce labels (W/ Textless Labels)	1
19	1214292	(00000000–)	Bracket, hanger, Rail, Lrg	1

Fig. 10 – Operator Platform Group

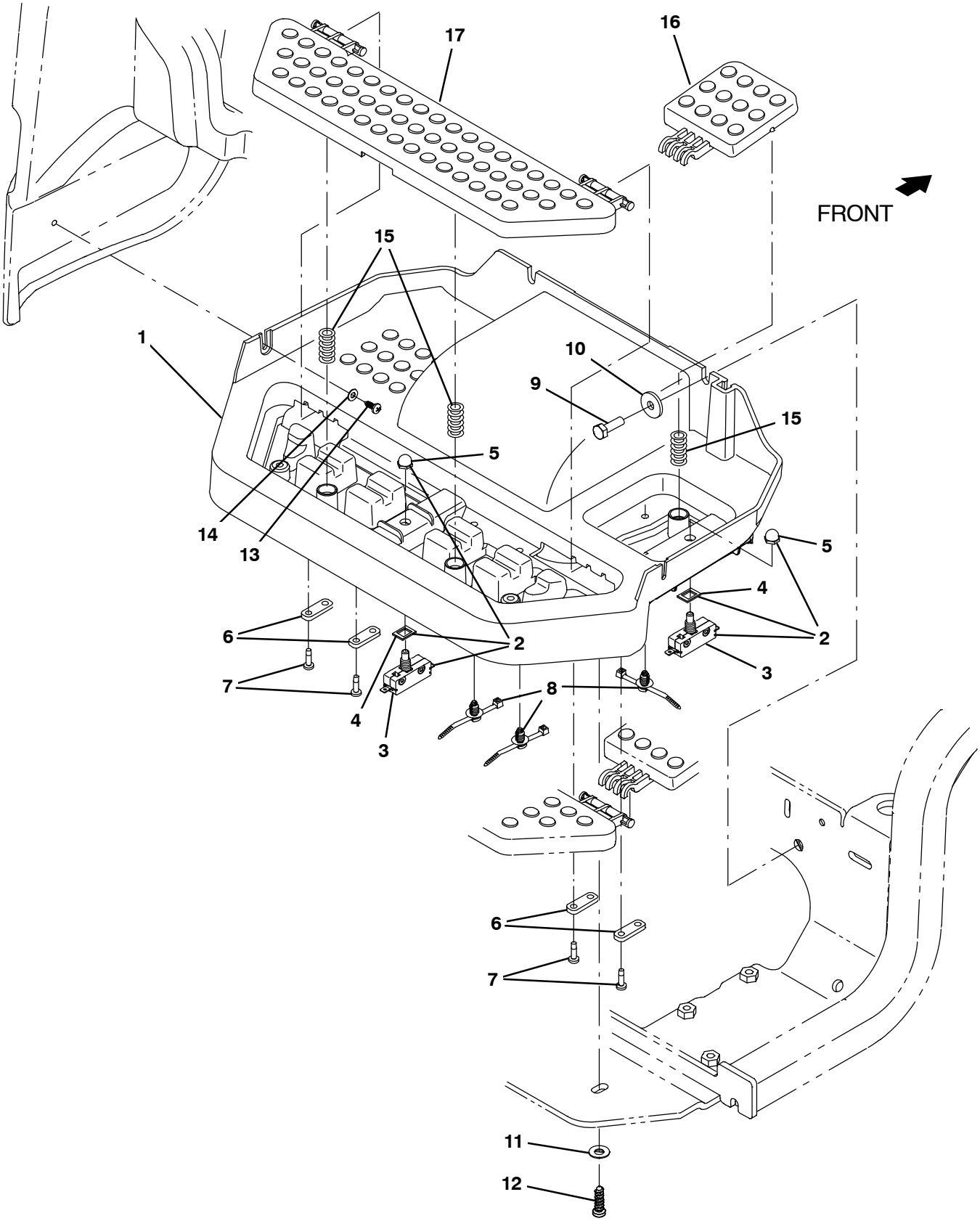

356733

Fig. 10 – Operator Platform Group

	Ref.	Part No.	Serial Number	Description	Qty.
	1	1239015	(00000000–)	Support, Deck	1
∇	2	9018095	(00000000–)	Switch Kit, Pedal, Modif	2
▲	3	1229309	(00000000–)	Switch, Push, Spst, No	1
▲	4	1238693	(00000000–)	Spacer, Switch, Pedal	1
▲	5	1035711	(00000000–)	Boot, Switch, Hex nut, .38–32 Thd	1
	6	1221894	(00000000–)	Plate, Retainer, Pedals	4
	7	1043573	(00000000–)	Screw, #10–14 X 0.675, Spl[Shcs,Selftap]	8
	8	1210807	(00000000–)	Wire, Tie [W/.25” Fir Tree Clip]	3
	9	12333	(00000000–)	Screw, Hex, M8 X 1.25 X 25, Ss, Nl	2
	10	1017218	(00000000–)	Washer, Flat, 0.32b 1.00d .12, Ss	2
	11	140027	(00000000–)	Washer, Flat, 0.35b 0.75d .04, Ss	2
	12	1215863	(00000000–)	Screw, Pan, Torx, M8 X 3.5 X 25[Remform]	2
	13	1018155	(00000000–)	Screw, Pan, Phl, M5 X 0.80 X 16, Tcut,Ss	2
	14	140011	(00000000–)	Washer, Flat, 0.21b 0.45d .03, Ss	2
	15	1226998	(00000000–)	Spring, Cmpr, 0.500d, 0.041wir, 1.00l	3
	16	1221519	(00000000–)	Pedal, Propel (Green Go)	1
	17	1221516	(00000000–)	Pedal, Safety (Operator Presence)	1

∇ Assembly

▲ Included in Assembly

Fig. 11 – Scrub Head Lift Group

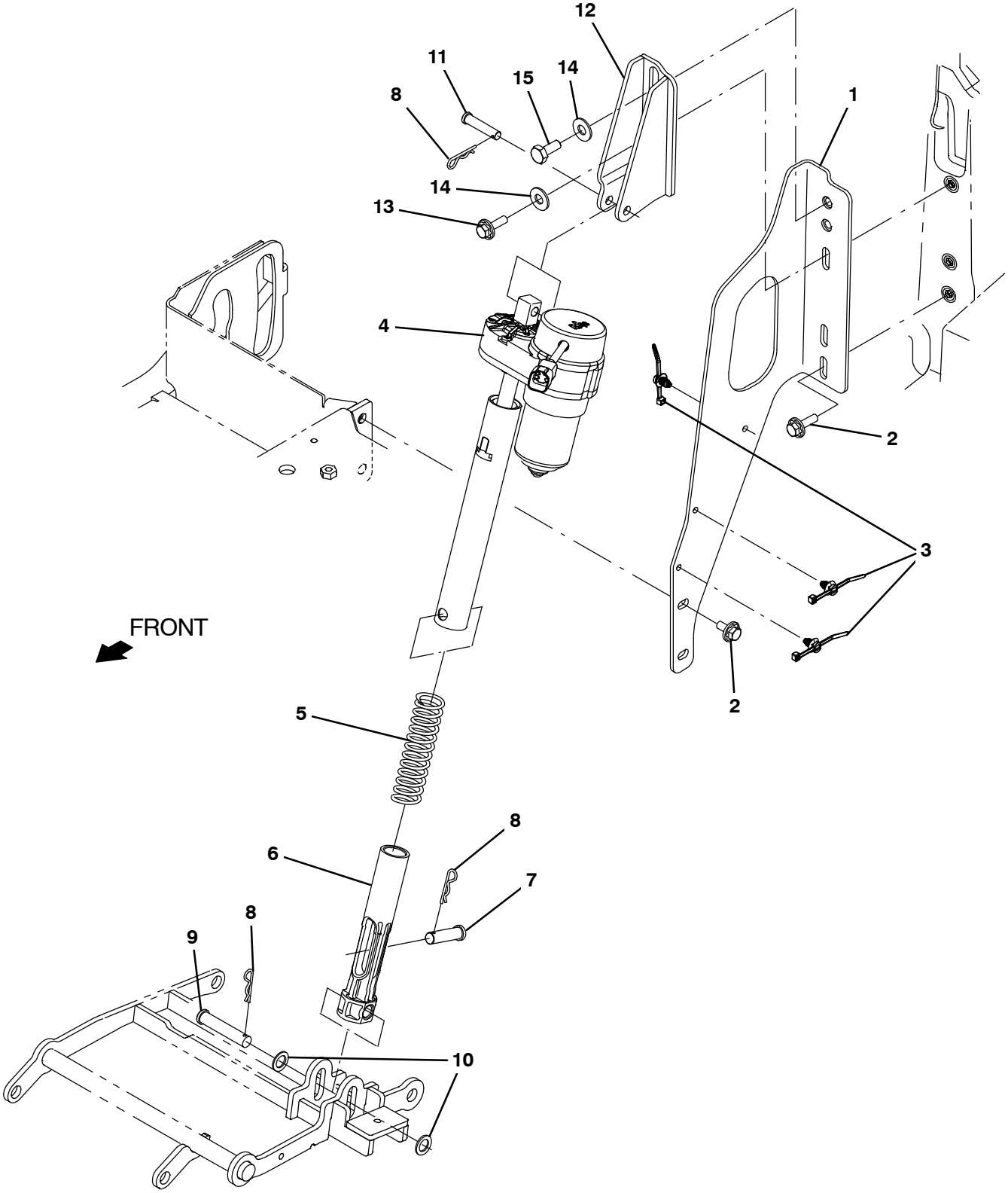

356736

Fig. 11 – Scrub Head Lift Group

Ref.	Part No.	Serial Number	Description	Qty.
1	9040110	(00000000–)	Plate Wldt Kit, Actuator, Ci [T350]	1
2	1020341	(00000000–)	Screw, Hex, M8 X 1.25 X 20, Ss, Sems	4
3	1210807	(00000000–)	Wire, Tie [W/.25” Fir Tree Clip]	3
4	9040109	(00000000–)	Actuator Kit, Ci [T350]	1
5	1228678	(00000000–)	Spring, Cmpr, 1.22od .12wir 5.0l	1
6	1221544	(00000000–)	Tube, Plunger, Spring	1
7	43290	(00000000–)	Pin, Clevis, 0.50d X 1.75l	1
8	44906	(00000000–)	Pin, Cotter, Hair, 0.38d .093 Wir	3
9	06279	(00000000–)	Pin, Clevis, 0.50d X 2.50l	1
10	140058	(00000000–)	Washer, Flat, 0.54b 0.88d .06, Ss [Wand]	2
11	17461	(00000000–)	Pin, Clevis, 0.37d X 1.75l	1
12	1229697	(00000000–)	Bracket, Wldt, Mtg, Actuator	1
13	1072816	(00000000–)	Screw, Hex, M8 X 1.25 X 30, Ss, Sems	1
14	01686	(00000000–)	Washer, Flat, 0.44b 1.00d .08, Ss	3
15	09770	(00000000–)	Screw, Hex, M10 X 1.50 X 25, Nl, Ss	2

Fig. 12 – Scrub Head Linkage Group, 500 MM Disk

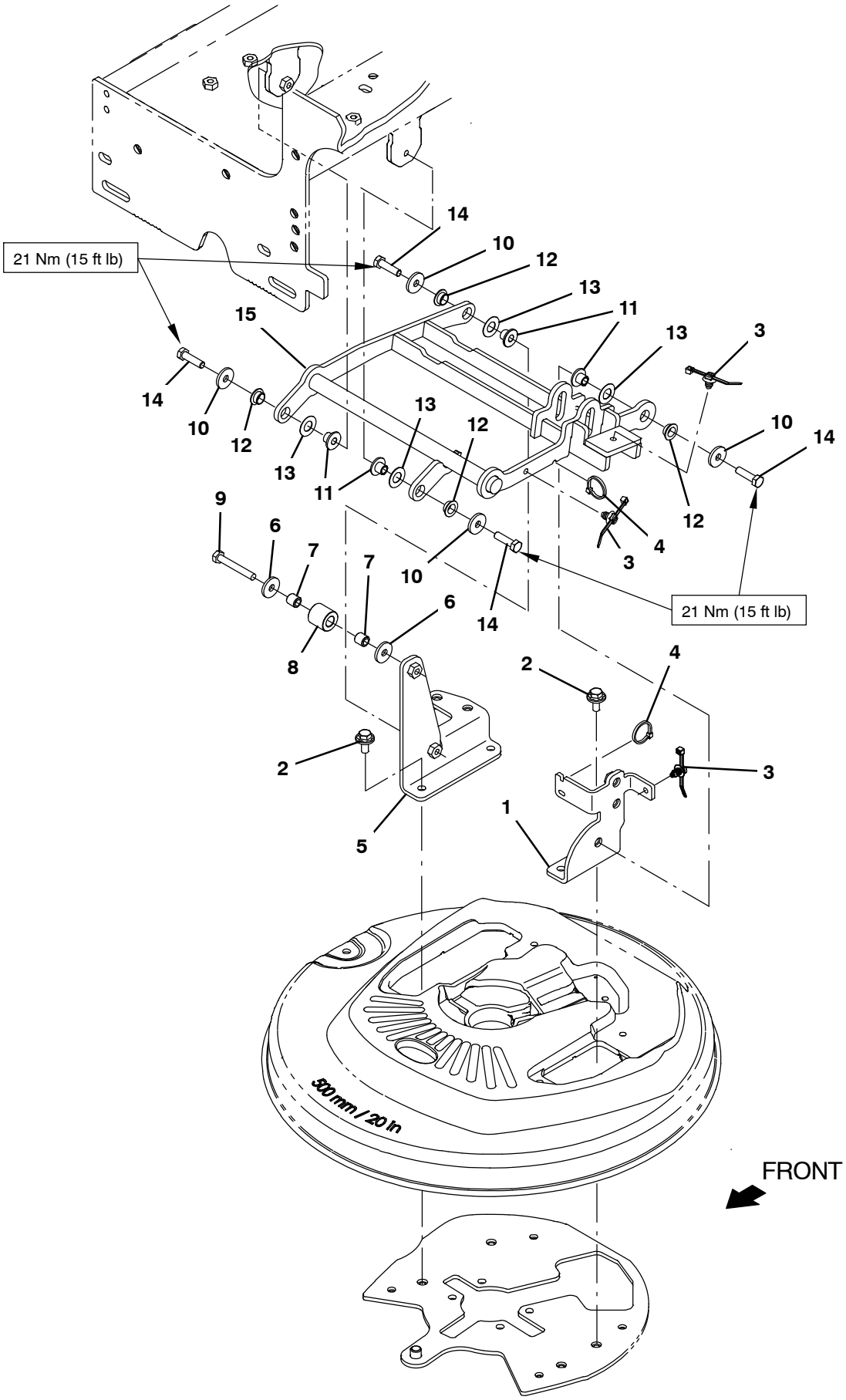

356745

Fig. 12 – Scrub Head Linkage Group, 500 MM Disk

Ref.	Part No.	Serial Number	Description	Qty.
1	1222752	(00000000–)	Bracket Wldt, Head Mtg, 50d, Short	1
2	1020341	(00000000–)	Screw, Hex, M8 X 1.25 X 20, Ss, Sems	4
3	1210807	(00000000–)	Wire, Tie [W/.25” Fir Tree Clip]	3
4	49263	(00000000–)	Tie, Cable, Nyl, 11.4l .19w 3.0 Max D	2
5	1222636	(00000000–)	Bracket Wldt, Mtg, Head, 50d, Tall	1
6	1017218	(00000000–)	Washer, Flat, 0.32b 1.00d .12, Ss	2
7	222460	(00000000–)	Sleeve, P/M, 0.32b 0.50d 0.5l [430ss]	2
8	1014020	(00000000–)	Roller, 0.99d 0.50b 0.95l, Acetal	1
9	222504	(00000000–)	Screw, Hex, M8 X 1.25 X 55, Ss	1
10	1017218	(00000000–)	Washer, Flat, 0.32b 1.00d .12, Ss	4
11	1225659	(00000000–)	Bushing, Flng, 8.3b 11.8d 9.7l	4
12	1225660	(00000000–)	Bushing, Flng, 12.0b 7.0l 14.0d, Plstc	4
13	89710	(00000000–)	Washer, Flat, 0.51b 1.00d .03, Nyl	4
14	1016399	(00000000–)	Screw, Hex, M8 X 1.25 X 30, Nl, Ss	4
15	1223319	(00000000–)	Lift Wldt, Head, Disk, 50cm	1

Fig. 13 – Scrub Head Group, 500 MM, Magnetic Hub

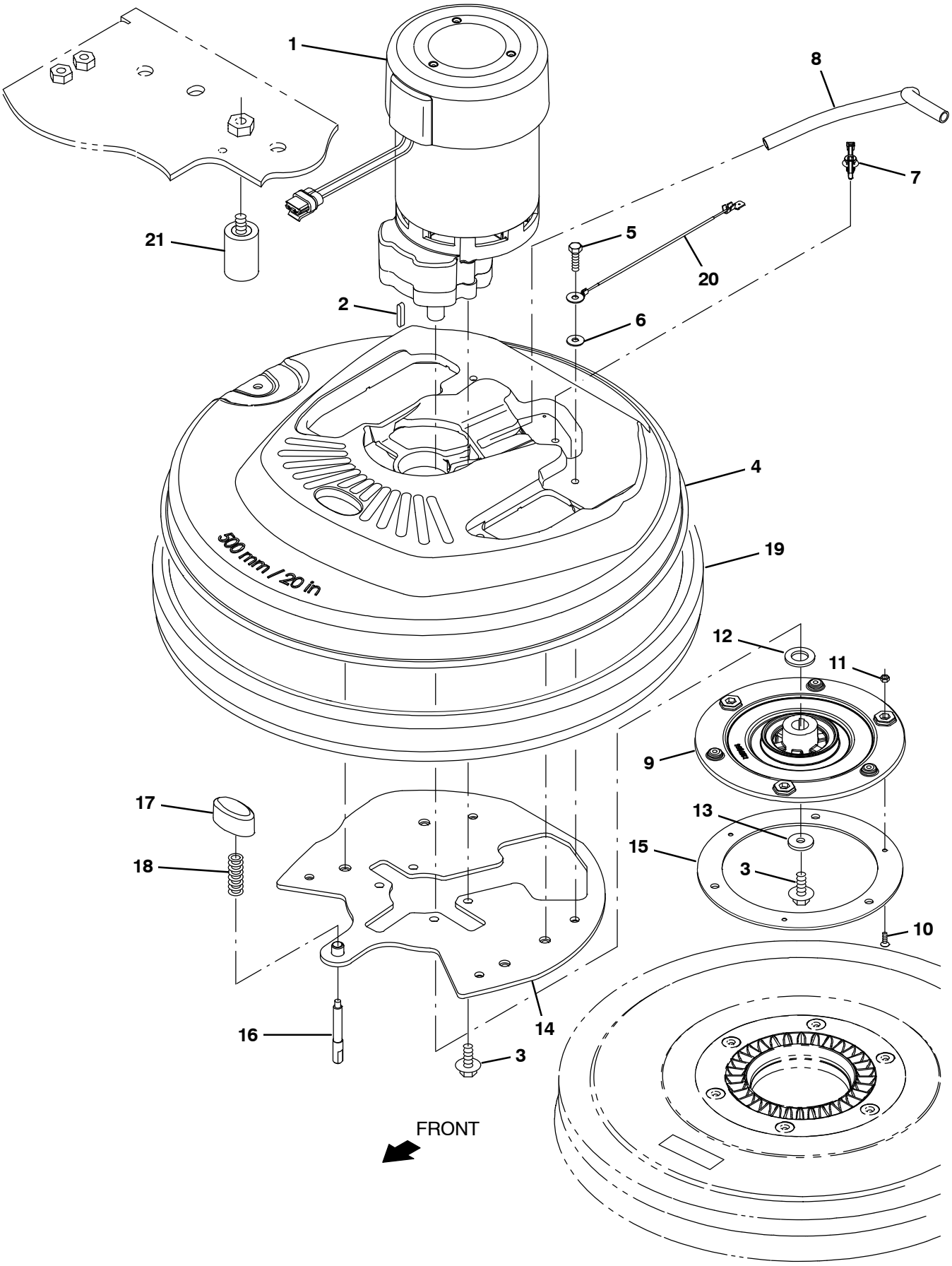

356739

Fig. 13 – Scrub Head Group, 500 MM, Magnetic Hub

	Ref.	Part No.	Serial Number	Description	Qty.
∇	1	1226976	(00000000–)	Motor, Ele, 24vdc 0215rpm 650w, 17mm	1
▲		1227273	(00000000–)	Brush Kit, Motor, Ele (4Pc)	1
▲	2	1014328	(00000000–)	Key, Sq, 05mm X 05mm, 25mml	1
	3	1020341	(00000000–)	Screw, Hex, M8 X 1.25 X 20, Ss, Sems	5
	4	1208041	(00000000–)	Housing, Head, 50cm	1
	5	1016005	(00000000–)	Screw, Hex, M6 X 1.00 X 25, Nl, Fl, Ss	3
	6	01684	(00000000–)	Washer, Flat, 0.27b 0.69d .05, Ss	3
	7	1210807	(00000000–)	Wire, Tie [W/.25” Fir Tree Clip]	1
	8	9014145	(00000000–)	Hose, Afmkt, Pe, .375id .50od, 05ft	1
	9	1227654	(00000000–)	Hub, Drive, Magnetic [Machined]	1
	10	1227670	(00000000–)	Screw, Flt, Soc, M4 X 0.70 X 14,18–8, Ss	3
	11	33932	(00000000–)	Nut, Hex, Lock, M4 X 0.70, Nl, Ss	3
	12	1022549	(00000000–)	Spacer, Shaft, 17.15b 30.0d 3.0l, Ss	1
	13	1017218	(00000000–)	Washer, Flat, 0.32b 1.00d .12, Ss	1
	14	1223980	(00000000–)	Plate Wldt, Head, Weighted	1
	15	1205043	(00000000–)	Ring, Hub, Magnetic	1
	16	1211256	(00000000–)	Pin, Stop, Long	1
	17	1211242	(00000000–)	Button, Plunger, Pad	1
	18	1212785	(00000000–)	Spring, Cmpr, .66od, .05wir, 1.75l, Ss	1
	19	1055025	(00000000–)	Bumper, Head, 50cm, W/ Bristle Skirt, Im	1
	20	1074344	(00000000–)	Harness, Ele [Ring With .250m Tail]	1
	21	1222544	(00000000–)	Bumper, Release, Brush	1

∇ Assembly

▲ Included in Assembly

Fig. 14 – Scrub Head Group, 500MM, 3–Lug Hub

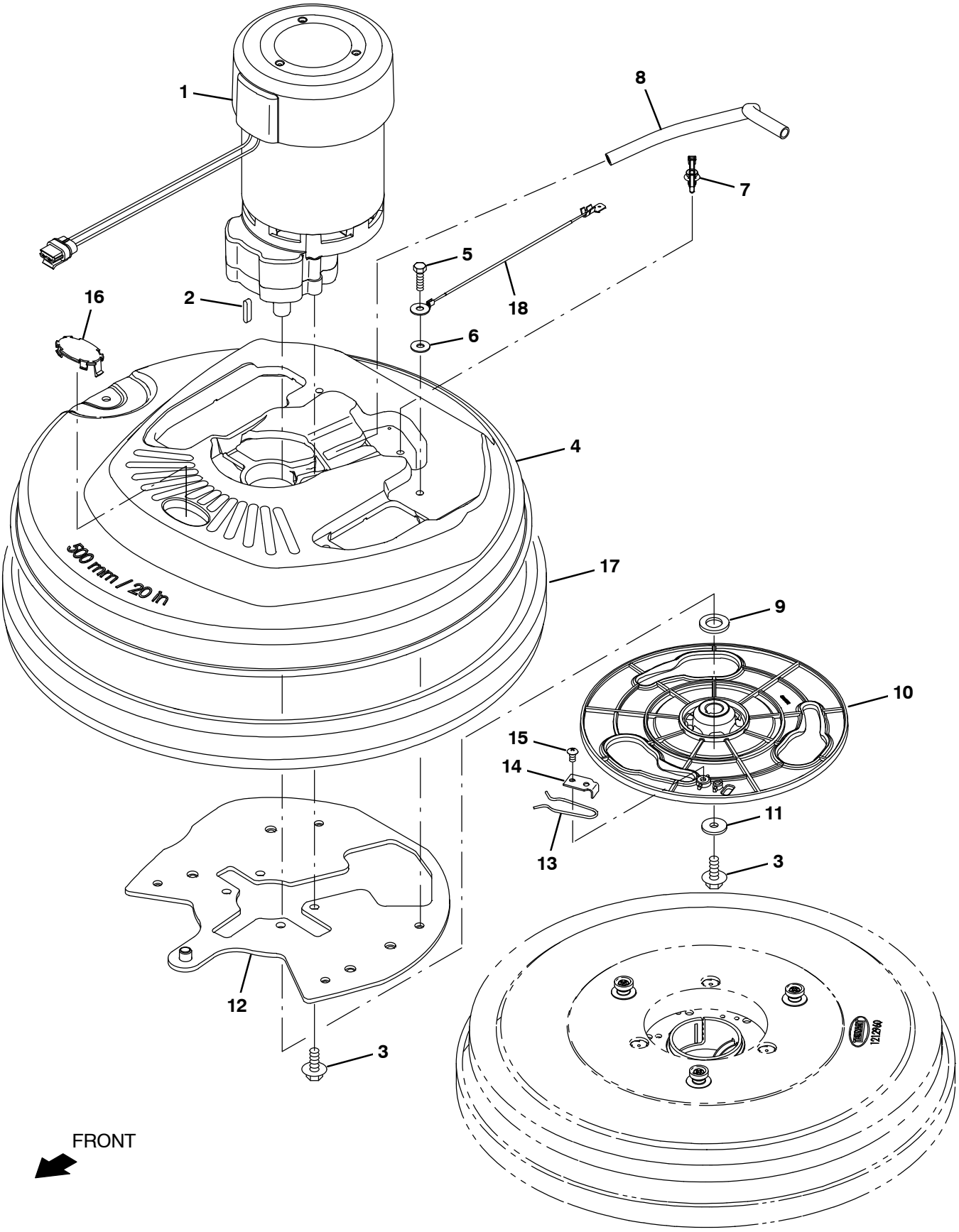

356740

Fig. 14 – Scrub Head Group, 500MM, 3–Lug Hub

	Ref.	Part No.	Serial Number	Description	Qty.
∇	1	1226976	(00000000–)	Motor, Ele, 24vdc 0215rpm 650w, 17mm	1
▲		1227273	(00000000–)	Brush Kit, Motor, Ele (4Pc)	1
▲	2	1014328	(00000000–)	Key, Sq, 05mm X 05mm, 25mml	1
	3	1020341	(00000000–)	Screw, Hex, M8 X 1.25 X 20, Ss, Sems	5
	4	1208041	(00000000–)	Housing, Head, 50cm	1
	5	1016005	(00000000–)	Screw, Hex, M6 X 1.00 X 25, Nl, Fl, Ss	3
	6	01684	(00000000–)	Washer, Flat, 0.27b 0.69d .05, Ss	3
	7	1210807	(00000000–)	Wire, Tie [W/.25” Fir Tree Clip]	1
	8	9014145	(00000000–)	Hose, Afmkt, Pe, .375id .50od, 05ft	1
	9	1022549	(00000000–)	Spacer, Shaft, 17.15b 30.0d 3.0l, Ss	1
	10	1219855	(00000000–)	Hub, Drive, 3lug, Alm–Nyl, 17mm[T2,T300]	1
	11	1017218	(00000000–)	Washer, Flat, 0.32b 1.00d .12, Ss	1
	12	1223980	(00000000–)	Plate Wldt, Head, Weighted	1
	13	1013188	(00000000–)	Clip, Spring, Drive Hub, Release [T3]	1
	14	1011201	(00000000–)	Plate, Clamp, Brush	1
	15	140197	(00000000–)	Screw, Trs, Phl, 10–24 X 0.38, Sems, Ss	2
	16	1221972	(00000000–)	Plug, Hole, Oval, Head, Hsng, Abs [T300]	1
	17	1055025	(00000000–)	Bumper, Head, 50cm, W/ Bristle Skirt, Im	1
	18	1074344	(00000000–)	Harness, Ele [Ring With .250m Tail]	1

∇ Assembly

▲ Included in Assembly

Fig. 15 – Squeegee Group, 500MM

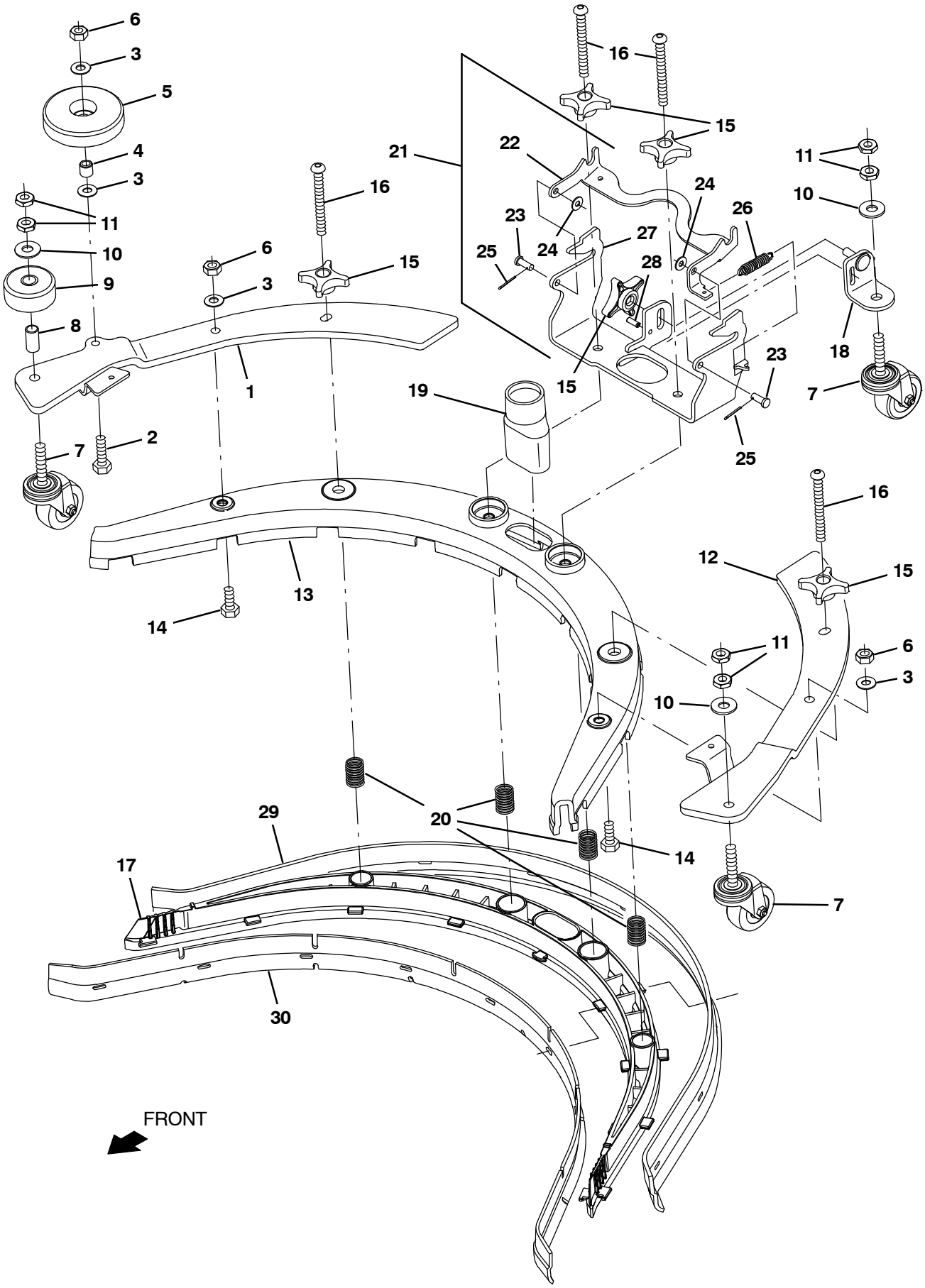

356737

Fig. 15 – Squeegee Group, 500MM

	Ref.	Part No.	Serial Number	Description	Qty.
▽		9040169	(00000000–)	Squeegee Kit, 500mm, Ci [T350/Ss350]	1
▲	1	1231165	(00000000–)	Bracket Wldt, Sppt, Sqge, Rh	1
▲	2	1016399	(00000000–)	Screw, Hex, M8 X 1.25 X 30, Nl, Ss	1
▲	3	140027	(00000000–)	Washer, Flat, 0.35b 0.75d .04, Ss	5
▲	4	222460	(00000000–)	Sleeve, P/M, 0.32b 0.50d 0.5l [430ss]	1
▲	5	1010560	(00000000–)	Wheel, Bmpr, 80d X 25w, Non–Marking	1
▲	6	07786	(00000000–)	Nut, Hex, Std, M8 X 1.25, Ss	3
▲	7	1234625	(00000000–)	Caster, Swivel, 50mmd, M10 X 48, Clr Pl	3
▲	8	1233732	(00000000–)	Sleeve, .40b .50d .93l [304ss]	1
▲	9	222403	(00000000–)	Wheel, 02.0d 0.88w 0.50b	1
▲	10	01686	(00000000–)	Washer, Flat, 0.44b 1.00d .08, Ss	2
▲	11	32716	(00000000–)	Nut, Hex, Jam, M10 X 1.5, Ss	4
▲	12	1231164	(00000000–)	Bracket Wldt, Sppt, Sqge, Lh	1
▲	13	1234623	(00000000–)	Frame, Sqge, 50cm	1
▲	14	09740	(00000000–)	Screw, Hex, M8 X 1.25 X 20, Ss	2
▲	15	1213677	(00000000–)	Knob, Star, 2.00od 4ear M8x1.25 [Yel]	5
▲	16	1255358	(00000000–)	Screw, Btn, M8 X 1.25 X 85, Ss	4
▲	17	1222892	(00000000–)	Retainer, Sqge, 50cm	1
▲	18	1228615	(00000000–)	Bracket Wldt, Caster, Sqge	1
▲	19	1229370	(00000000–)	Coupling, Sqge, 50cm	1
▲	20	22290	(00000000–)	Spring, Cmpr, 0.72od .06wir 02.3l	4
▲▽	21	9016747	(00000000–)	Bracket Kit, Sqge, 500Mm, Ci	1
▲▲	22	1232136	(00000000–)	Bracket, Release, Sqge, 50Cm	1
▲▲	23	1233730	(00000000–)	Pin, Clevis, 0.25d, 0.63l	2
▲▲	24	19066	(00000000–)	Washer, Flat, 0.25b 0.56d .05, Pl, 10	2
▲▲	25	08178	(00000000–)	Pin, Cotter, .062 X 0.75	2
▲▲	26	1233820	(00000000–)	Spring, Extn, 0.375od .052wir 1.75l	1
▲▲	27	1250468	(00000000–)	Bracket Wldt, Sqge, 50cm	1
▲▲	28	140609	(00000000–)	Pin, Roll, .187d X 0.56l, Pl	1
▲▽		9016742	(00000000–)	Blade Kit, 500Mm, Linatex	1
▲▲	29	1223125	(00000000–)	Blade, Sqge, Rear, 1007l, Linatex[500mm]	1
▲▲	30	1223124	(00000000–)	Blade, Sqge, Front, 938l, Linatex[500mm]	1
▽		9016741	(00000000–)	Blade Kit, 500Mm, Gum (Option)	1
▲	29	1227127	(00000000–)	Blade, Sqge, Rear, 1007l, Gum [500mm] (Option)	1
▲	30	1227126	(00000000–)	Blade, Sqge, Front, 938l, Gum [500mm] (Option)	1
▽		9016743	(00000000–)	Blade Kit, 500Mm, Urethane (Option)	1
▲	29	1227125	(00000000–)	Blade, Sqge, Rear, 1007l, Urethane 500mm (Option)	1
▲	30	1227124	(00000000–)	Blade, Sqge, Front, 938l, Urethane 500mm (Option)	1

▽ Assembly

▲ Included in Assembly

Fig. 16 – Squeegee Rail Group, 500 MM

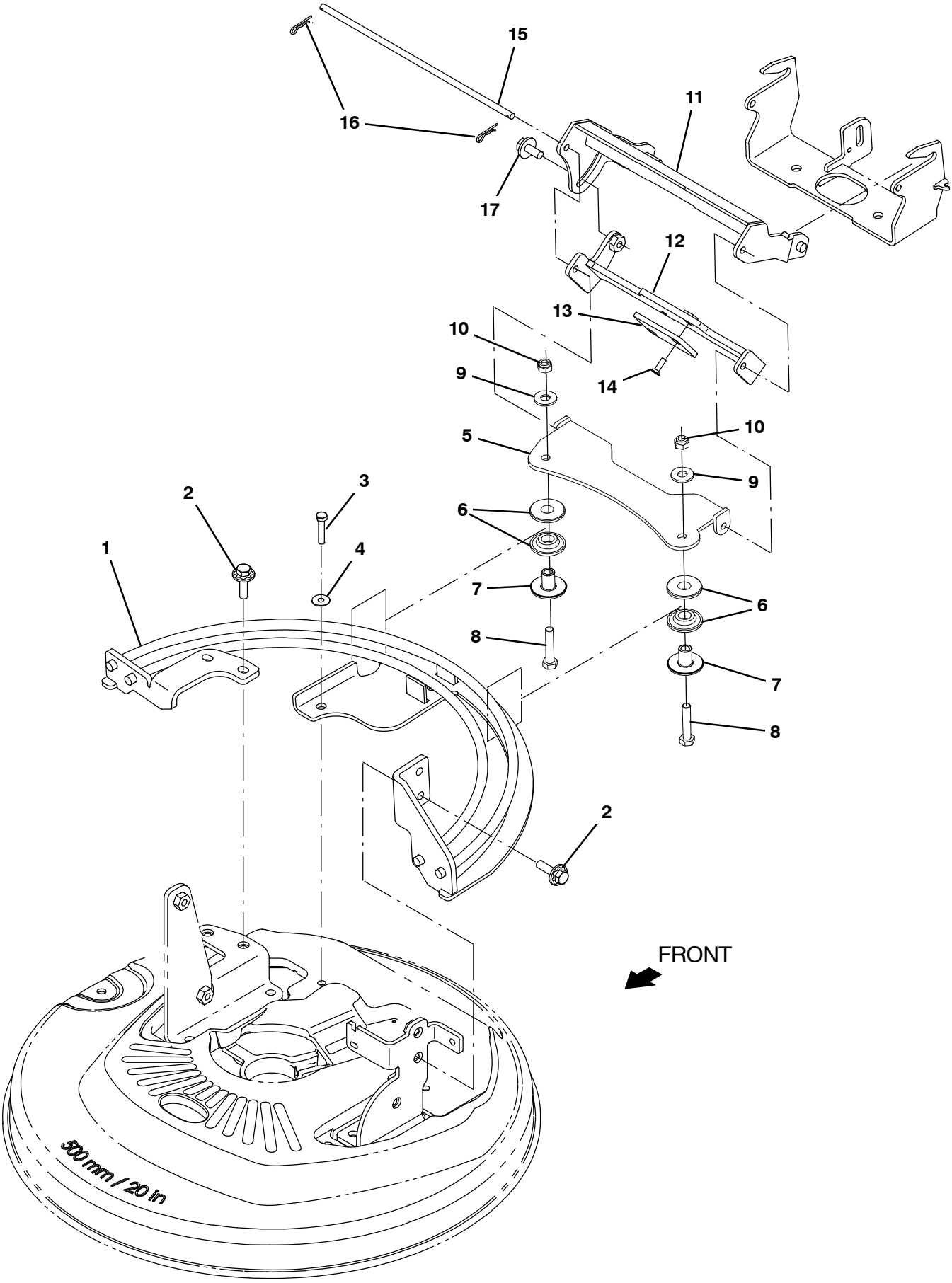

356746

Fig. 16 – Squeegee Rail Group, 500 MM

	Ref.	Part No.	Serial Number	Description	Qty.
▽		9016749	(00000000–)	Rail Kit, Sqge, 500Mm, Ci [T350/SS350]	
▲	1	1225954	(00000000–)	Rail Wldt, Sqge, 50cm	1
▲	2	1072816	(00000000–)	Screw, Hex, M8 X 1.25 X 30, Ss, Sems	4
▲	3	1016005	(00000000–)	Screw, Hex, M6 X 1.00 X 25, Nl, Fl, Ss	1
▲	4	01684	(00000000–)	Washer, Flat, 0.27b 0.69d .05, Ss	1
▽		9040171	(00000000–)	Support Kit, Sqge, Ci [T350/Ss350]	1
▲	5	1231458	(00000000–)	Linkage Wldt, Brg, Sqge	1
▲	6	1231946	(00000000–)	Roller, 12.8mmb 35.0mmd 8.4mml	4
▲	7	1226539	(00000000–)	Bushing, Flng, 8.3mmb 12.7mmd 17.8mml	2
▲	8	59658	(00000000–)	Screw, Hex, M8 X 1.25 X 35, Nl, Ss	2
▲	9	140027	(00000000–)	Washer, Flat, 0.35b 0.75d .04, Ss	2
▲	10	07786	(00000000–)	Nut, Hex, Std, M8 X 1.25, Ss	2
▲	11	1250474	(00000000–)	Linkage Wldt, Sqge, Adj	1
▲	12	1233352	(00000000–)	Bracket Wldt, Sqge, Adj	1
▲	13	1229329	(00000000–)	Pad, Rest, Sqge	1
▲	14	09120	(00000000–)	Screw, Flt, Soc, M5 X 0.80 X 16, 10.9	2
▲	15	1234041	(00000000–)	Pin, 0.25d, 10.45l	1
▲	16	08085	(00000000–)	Pin, Cotter, Hair, 0.31d .058 Wir	2
▲	17	1020341	(00000000–)	Screw, Hex, M8 X 1.25 X 20, Ss, Sems	1

▽ Assembly

▲ Included in Assembly

Fig. 17 – Scrub Head Linkage Group, 600 MM Disk

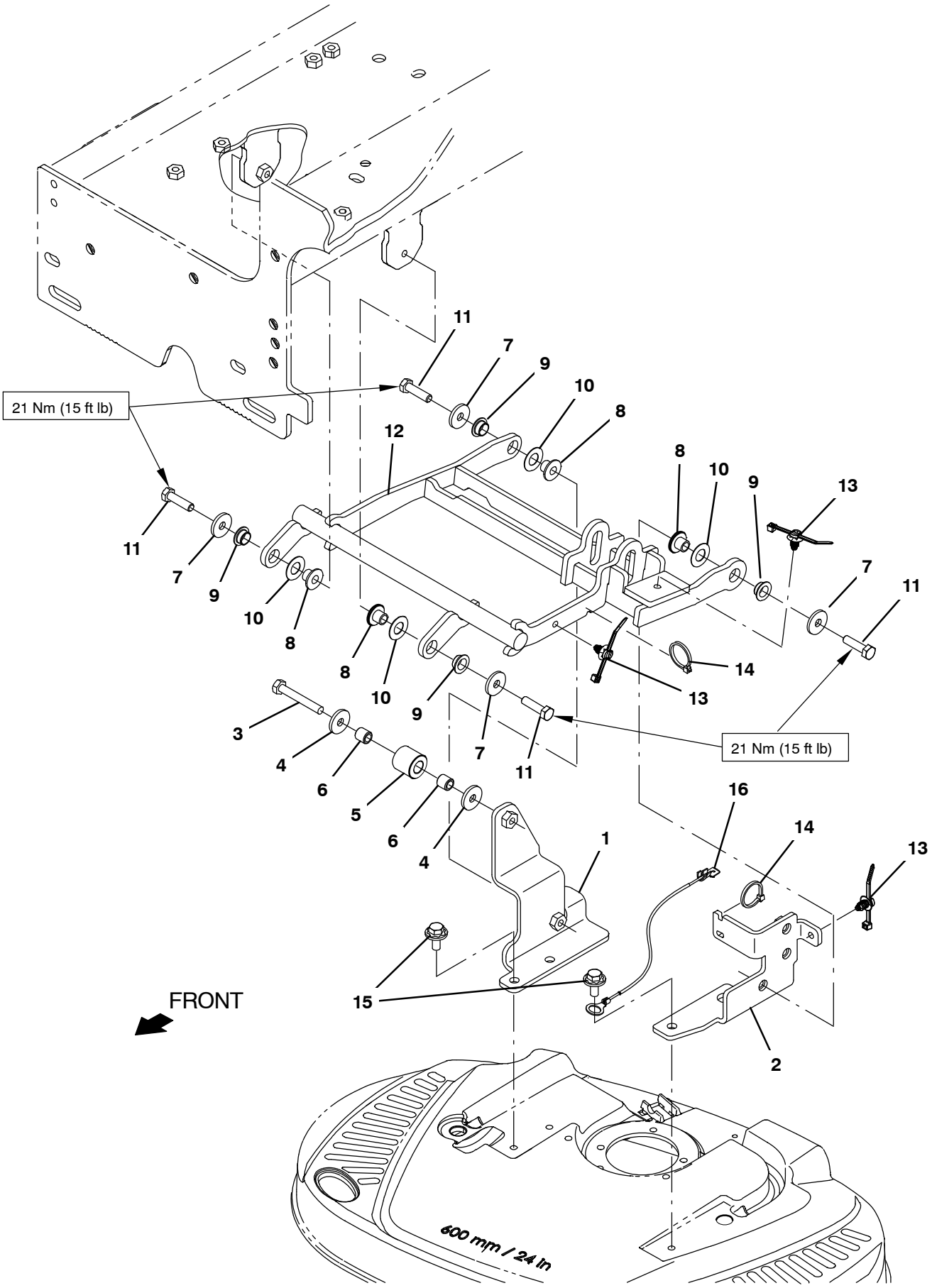

356748

Fig. 17 – Scrub Head Linkage Group, 600 MM Disk

Ref.	Part No.	Serial Number	Description	Qty.
1	1220506	(00000000–)	Bracket Wldt, Mtg, Head, 60dd, Tall	1
2	1221084	(00000000–)	Bracket Wldt, Mtg, Head, 60dd, Short	1
3	222504	(00000000–)	Screw, Hex, M8 X 1.25 X 55, Ss	1
4	1017218	(00000000–)	Washer, Flat, 0.32b 1.00d .12, Ss	2
5	1014020	(00000000–)	Roller, 0.99d 0.50b 0.95l, Acetal	1
6	222460	(00000000–)	Sleeve, P/M, 0.32b 0.50d 0.5l [430ss]	2
7	1017218	(00000000–)	Washer, Flat, 0.32b 1.00d .12, Ss	4
8	1225659	(00000000–)	Bushing, Flng, 8.3b 11.8d 9.7l	4
9	1225660	(00000000–)	Bushing, Flng, 12.0b 7.0l 14.0d, Plstc	4
10	89710	(00000000–)	Washer, Flat, 0.51b 1.00d .03, Nyl	4
11	1016399	(00000000–)	Screw, Hex, M8 X 1.25 X 30, Nl, Ss	4
12	1224694	(00000000–)	Lift Wldt, Head, Disk, 60cm	1
13	1210807	(00000000–)	Wire, Tie [W/.25” Fir Tree Clip]	2
14	49263	(00000000–)	Tie, Cable, Nyl, 11.4l .19w 3.0 Max D	1
15	1020341	(00000000–)	Screw, Hex, M8 X 1.25 X 20, Ss, Sems	3
16	1074344	(00000000–)	Harness, Ele [Ring With .250m Tail]	1

Fig. 18 – Scrub Head Group, 600 MM, Magnetic Hub

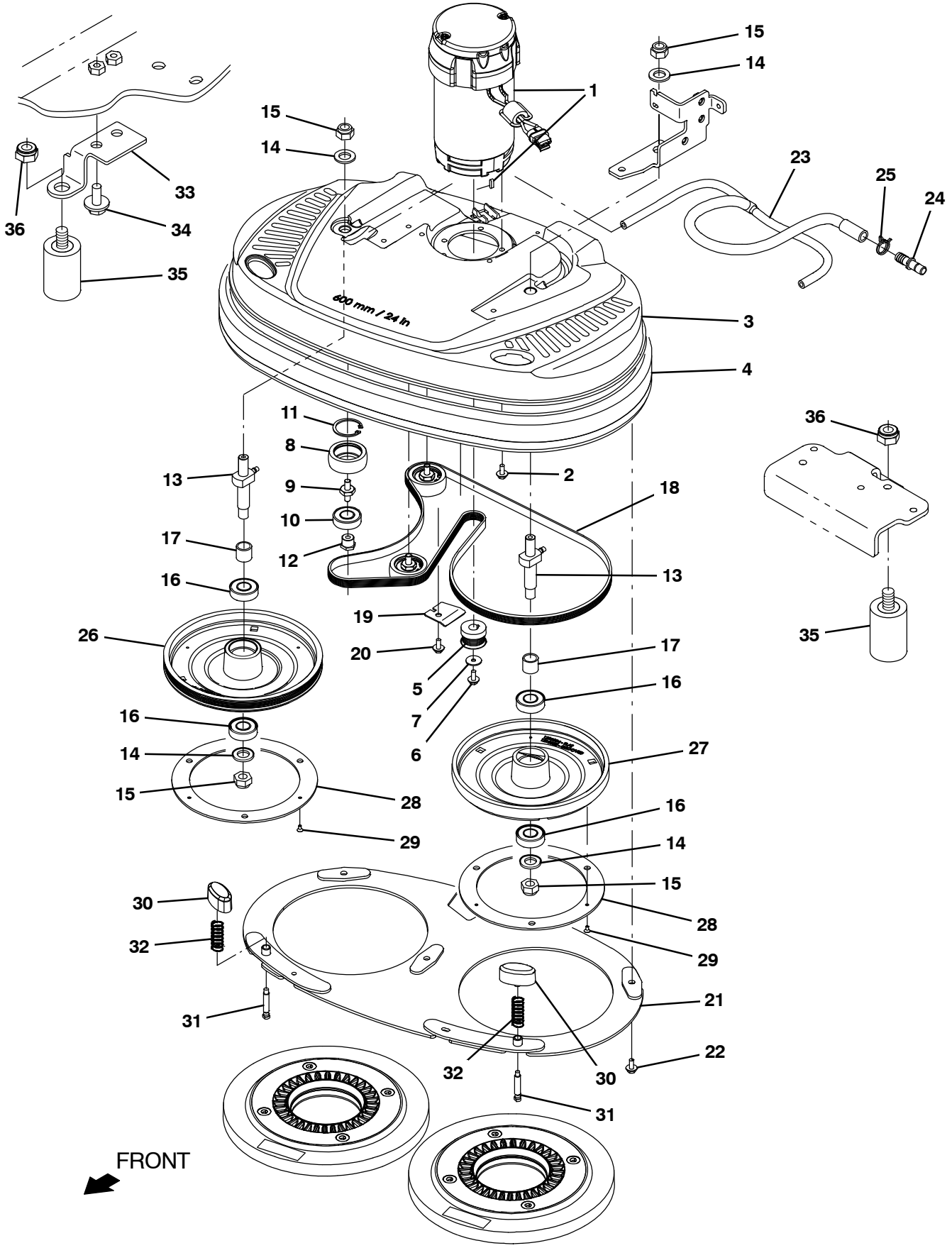

356749

Fig. 18 – Scrub Head Group, 600 MM, Magnetic Hub

	Ref.	Part No.	Serial Number	Description	Qty.
∇	1	1227280	(00000000–)	Motor, 24vdc, 2000rpm, 7/8hp	1
▲		1059370	(00000000–)	Brush, Motor, Replmt [Bag of 4]	1
	2	1034731	(00000000–)	Screw, Hex, M6 X 1.00 X 16, Sems, Ss	4
	3	1211027	(00000000–)	Housing, Head, 60cm [Machined]	1
	4	9011849	(00000000–)	Bumper, Head, 60cm, Bristle Skirt	1
	5	1213927	(00000000–)	Sheave, 06grv, 1.25pd 0.54b, Ss [Keyed]	1
	6	1034731	(00000000–)	Screw, Hex, M6 X 1.00 X 16, Sems, Ss	1
	7	19680127	(00000000–)	Washer, Flat, 6.2mm Id X 22.0mm Od X 1.9	1
	8	1058514	(00000000–)	Pulley, Idler, 55d X 21w[60cm Dual Disk]	3
	9	1211624	(00000000–)	Stud, M8 X 1.25, Dbl End W/Hex, Ss	3
	10	1211187	(00000000–)	Bearing, Ball, 0.67b 1.57d 0.47w [6203]	3
	11	1013884	(00000000–)	Ring, Retaining, Int, 40mm, Ss	3
	12	1011008	(00000000–)	Nut, T, M8 X 1.25, 17.0d X 11.8l, Stl Pl	3
	13	1214206	(00000000–)	Shaft Wldt, Mtg, Pulley	2
	14	1022549	(00000000–)	Spacer, Shaft, 17.15b 30.0d 3.0l, Ss	4
	15	41517	(00000000–)	Nut, Hex, Lock, M14 X 2.00, Nl	4
	16	1211187	(00000000–)	Bearing, Ball, 0.67b 1.57d 0.47w [6203]	4
	17	1011041	(00000000–)	Tube, 0.69id 0.87od 00.8l, Stl, Pl	2
	18	1055305	(00000000–)	Belt, Drive, 6pj, Ej139 [T3]	1
	19	1217752	(00000000–)	Bracket, Belt Guide	1
	20	1034731	(00000000–)	Screw, Hex, M6 X 1.00 X 16, Sems, Ss	1
	21	1216346	(00000000–)	Bracket Wldt, Guard, Splash, 60cm	1
	22	1034731	(00000000–)	Screw, Hex, M6 X 1.00 X 16, Sems, Ss	5
	23	1216084	(00000000–)	Manifold, Distribution, Water, 60dd [Vw]	1
	24	1212807	(00000000–)	Fitting, Plstc, Str, Qm08/Bm08	1
	25	607776	(00000000–)	Clamp, Hose, Wir, .73 – .77, Silver	1
	26	1210503	(00000000–)	Hub, Drive, Magnetic, Grooved, 60cm Dd	1
	27	1210504	(00000000–)	Hub, Drive, Magnetic, Flat, 60cm Dd	1
	28	1205043	(00000000–)	Ring, Hub, Magnetic	2
	29	630114	(00000000–)	Screw, Flt, Phl, M4 X 0.70 X 8, 4.8	6
	30	1211242	(00000000–)	Button, Plunger, Pad	2
	31	1211907	(00000000–)	Pin, Stop, Short	2
	32	1212785	(00000000–)	Spring, Cmpr, .66od, .05wir, 1.75l, Ss	2
	33	1223552	(00000000–)	Plate, Brush Release	1
	34	1020341	(00000000–)	Screw, Hex, M8 X 1.25 X 20, Ss, Sems	2
	35	1222544	(00000000–)	Bumper, Release, Brush	2
	36	08714	(00000000–)	Nut, Hex, Lock, M10 X 1.5, Nl, Ss	2

∇ Assembly

▲ Included in Assembly

Fig. 19 – Scrub Head Group, 600MM, 3–Lug Hub

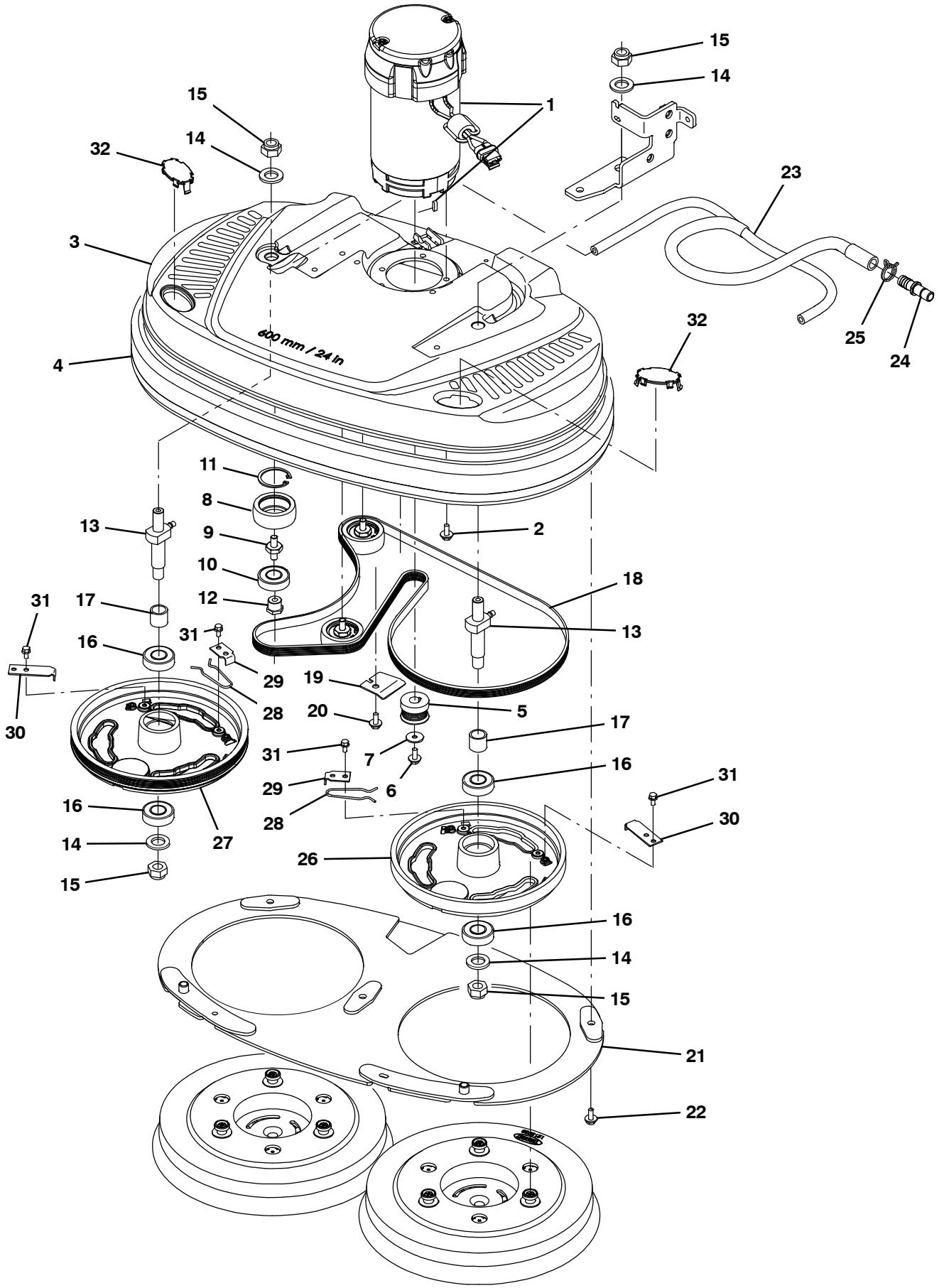

356750

Fig. 19 – Scrub Head Group, 600MM, 3–Lug Hub

	Ref.	Part No.	Serial Number	Description	Qty.
▽	1	1227280	(00000000–)	Motor, 24vdc, 2000rpm, 7/8hp	1
▲		1059370	(00000000–)	Brush, Motor, Replmt [Bag of 4]	1
	2	1034731	(00000000–)	Screw, Hex, M6 X 1.00 X 16, Sems, Ss	4
	3	1211027	(00000000–)	Housing, Head, 60cm [Machined]	1
	4	9011849	(00000000–)	Bumper, Head, 60cm, Bristle Skirt	1
	5	1213927	(00000000–)	Sheave, 06grv, 1.25pd 0.54b, Ss [Keyed]	1
	6	1034731	(00000000–)	Screw, Hex, M6 X 1.00 X 16, Sems, Ss	1
	7	19680127	(00000000–)	Washer, Flat, 6.2mm Id X 22.0mm Od X 1.9	1
	8	1058514	(00000000–)	Pulley, Idler, 55d X 21w[60cm Dual Disk]	3
	9	1211624	(00000000–)	Stud, M8 X 1.25, Dbl End W/Hex, Ss	3
	10	1211187	(00000000–)	Bearing, Ball, 0.67b 1.57d 0.47w [6203]	3
	11	1013884	(00000000–)	Ring, Retaining, Int, 40mm, Ss	3
	12	1011008	(00000000–)	Nut, T, M8 X 1.25, 17.0d X 11.8l, Stl Pl	3
	13	1214206	(00000000–)	Shaft Wldt, Mtg, Pulley	2
	14	1022549	(00000000–)	Spacer, Shaft, 17.15b 30.0d 3.0l, Ss	4
	15	41517	(00000000–)	Nut, Hex, Lock, M14 X 2.00, Nl	4
	16	1211187	(00000000–)	Bearing, Ball, 0.67b 1.57d 0.47w [6203]	4
	17	1011041	(00000000–)	Tube, 0.69id 0.87od 00.8l, Stl, Pl	2
	18	1055305	(00000000–)	Belt, Drive, 6pj, Ej139 [T3]	1
	19	1217752	(00000000–)	Bracket, Belt Guide	1
	20	1034731	(00000000–)	Screw, Hex, M6 X 1.00 X 16, Sems, Ss	1
	21	1216346	(00000000–)	Bracket Wldt, Guard, Splash, 60cm	1
	22	1034731	(00000000–)	Screw, Hex, M6 X 1.00 X 16, Sems, Ss	5
	23	1216084	(00000000–)	Manifold, Distribution, Water, 60dd [Vw]	1
	24	1212807	(00000000–)	Fitting, Plstc, Str, Qm08/Bm08	1
	25	607776	(00000000–)	Clamp, Hose, Wir, .73 – .77, Silver	1
	26	1059205	(00000000–)	Hub, Drive, 3lug, Alm, 2disk, Flt	1
	27	1059206	(00000000–)	Hub, Drive, 3lug, Alm, 2disk, 6grv	1
	28	1013188	(00000000–)	Clip, Spring, Drive Hub, Release [T3]	2
	29	1011201	(00000000–)	Plate, Clamp, Brush	2
	30	1013592	(00000000–)	Stop, Driver, Release	2
	31	223198	(00000000–)	Screw, Hex, M5 X 0.80 X 10, Fmg	8
	32	1221972	(00000000–)	Plug, Hole, Oval, Head, Hsng, Abs [T300]	2

Fig. 20 – Squeegee Group, 600MM

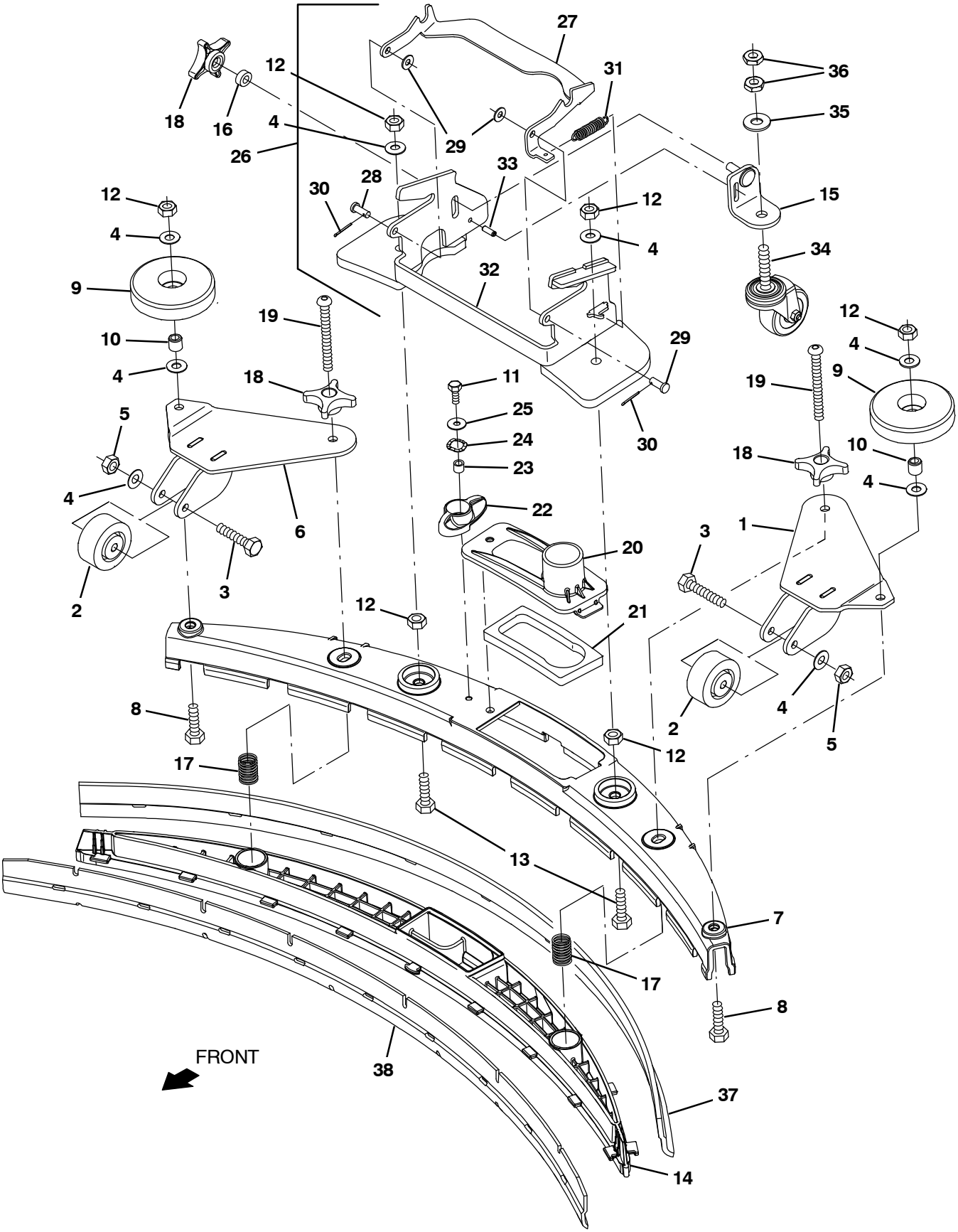

356738

Fig. 20 – Squeegee Group, 600MM

	Ref.	Part No.	Serial Number	Description	Qty.
▽		9040170	(00000000–)	Squeegee Kit, 600mm, Ci [T350/Ss350]	1
▲	1	1222222	(00000000–)	Bracket Wldt, Caster, Lh	1
▲	2	1231753	(00000000–)	Wheel, Urethane, 0.323b 2.0d 1.0w	2
▲	3	222505	(00000000–)	Screw, Hex, M8 X 1.25 X 45, Ss	2
▲	4	140027	(00000000–)	Washer, Flat, 0.35b 0.75d .04, Ss	8
▲	5	08713	(00000000–)	Nut, Hex, Lock, M8 X 1.25, Nl, Ss	2
▲	6	1222223	(00000000–)	Bracket Wldt, Caster, Rh	2
▲	7	1221961	(00000000–)	Frame, Sqge, 60cm [Machined]	1
▲	8	1016399	(00000000–)	Screw, Hex, M8 X 1.25 X 30, Nl, Ss	2
▲	9	1010560	(00000000–)	Wheel, Bmpr, 80d X 25w, Non–Marking	2
▲	10	222460	(00000000–)	Sleeve, P/M, 0.32b 0.50d 0.5l [430ss]	2
▲	11	11329	(00000000–)	Screw, Hex, M6 X 1.00 X 16, Nl, Ss	1
▲	12	07786	(00000000–)	Nut, Hex, Std, M8 X 1.25, Ss	6
▲	13	09023	(00000000–)	Screw, Hex, M8 X 1.25 X 35, Fl, Ss	2
▲	14	1203638	(00000000–)	Retainer, Sqge [T300]	1
▲	15	1234256	(00000000–)	Bracket Wldt, Caster, Sqge, 60Cm	1
▲	16	1234391	(00000000–)	Spacer, 0.33B, 0.75D. 0.33L, Alm	1
▲	17	22290	(00000000–)	Spring, Cmpr, 0.72od .06wir 02.3l	2
▲	18	1213677	(00000000–)	Knob, Star, 2.00od 4ear M8x1.25 [Yel]	3
▲	19	1255358	(00000000–)	Screw, Btn, M8 X 1.25 X 85, Ss	2
▲	20	1209631	(00000000–)	Cover, Trap, Water, Sqge	1
▲	21	1210756	(00000000–)	Gasket, Trap, Water, Sqge	1
▲	22	1222109	(00000000–)	Knob, Sqge, 58l, M6 X 1.00, Plstc	1
▲	23	140154	(00000000–)	Sleeve, P/M, 0.25b 0.38d 0.3l, Pl	1
▲	24	140060	(00000000–)	Washer, .505 X .750 X 0.45 Wave	1
▲	25	01684	(00000000–)	Washer, Flat, 0.27b 0.69d .05, Ss	1
▲▽	26	9016748	(00000000–)	Bracket Kit, Sqge, 600Mm, Ci	1
▲▲	27	1232151	(00000000–)	Bracket, Release, Sqge, 60cm	1
▲▲	28	1233730	(00000000–)	Pin, Clevis, 0.25d, 0.63l	2
▲▲	29	19066	(00000000–)	Washer, Flat, 0.25b 0.56d .05, Pl, 10	2
▲▲	30	08178	(00000000–)	Pin, Cotter, .062 X 0.75	2
▲▲	31	1233820	(00000000–)	Spring, Extn, 0.375od .052wir 1.75l	1
▲▲	32	1231790	(00000000–)	Bracket Wldt, Sqge, 60cm	1
▲▲	33	140609	(00000000–)	Pin, Roll, .187d X 0.56l, Pl	1
▲	34	1234625	(00000000–)	Caster, Swivel, 50mmd, M10 X 48, Clr Pl	1
▲	35	01686	(00000000–)	Washer, Flat, 0.44b 1.00d .08, Ss	1
▲	36	32716	(00000000–)	Nut, Hex, Jam, M10 X 1.5, Ss	2
▲▽		9016745	(00000000–)	Blade Kit, 600Mm, Linatex	1
▲▲	37	1222961	(00000000–)	Blade, Sqge, Rear, 861l, Linatex[600mm]	1
▲▲	38	1222960	(00000000–)	Blade, Sqge, Front, 813l, Linatex[600mm]	1

CONTINUED

▽ Assembly
▲ Included in Assembly

356738

Fig. 20 – Squeegee Group, 600MM (Continued)

	Ref.	Part No.	Serial Number	Description	Qty.
▽		9016744	(00000000–)	Blade Kit, 600Mm, Gum (Option)	1
▲	37	1227131	(00000000–)	Blade, Sqge, Rear, 861L, Gum 600mm (Option)	1
▲	38	1227130	(00000000–)	Blade, Sqge, Front, 813l, Gum 600mm (Option)	1
▽		9016746	(00000000–)	Blade Kit, 600Mm, Urethane (Option)	1
▲	37	1227129	(00000000–)	Blade, Sqge, Rear, 861L, Urethane 600mm (Option)	1
▲	38	1227128	(00000000–)	Blade, Sqge, Front, 813l, Urethane 600mm (Option)	1

▽ Assembly

▲ Included in Assembly

Fig. 21 – Squeegee Rail Group, 600 MM Disk

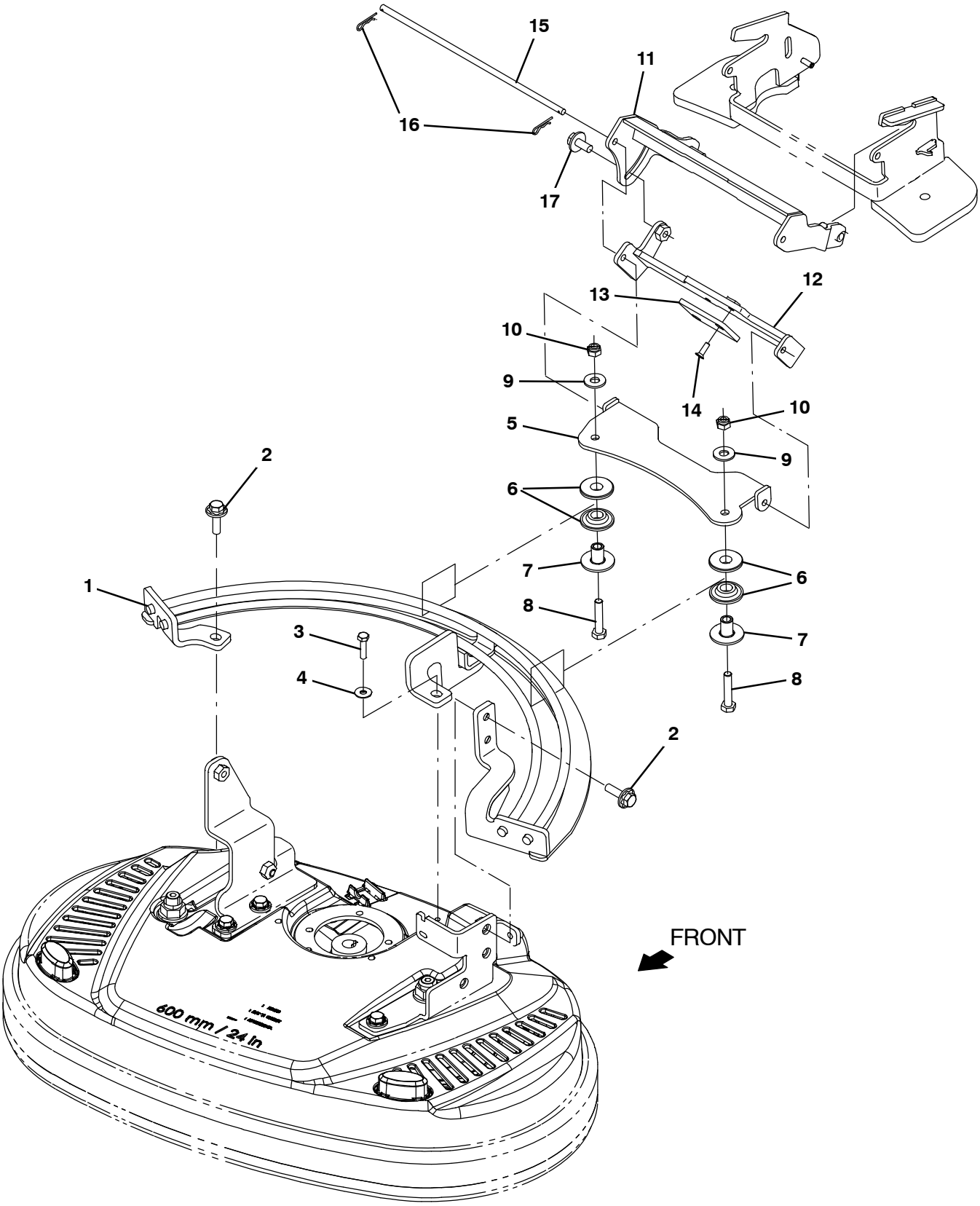

356747

Fig. 21 – Squeegee Rail Group, 600 MM Disk

	Ref.	Part No.	Serial Number	Description	Qty.
▽		9016750	(00000000–)	Rail Kit, Sqge, 600Mm, Ci [T350/Ss350]	1
▲	1	1227644	(00000000–)	Rail Wldt, Sqge, 60cm	1
▲	2	1072816	(00000000–)	Screw, Hex, M8 X 1.25 X 30, Ss, Sems	3
▲	3	1016005	(00000000–)	Screw, Hex, M6 X 1.00 X 25, Nl, Fl, Ss	1
▲	4	01684	(00000000–)	Washer, Flat, 0.27b 0.69d .05, Ss	1
▽		9040171	(00000000–)	Support Kit, Sqge, Ci [T350/Ss350]	1
▲	5	1231458	(00000000–)	Linkage Wldt, Brg, Sqge	1
▲	6	1231946	(00000000–)	Roller, 12.8mmb 35.0mmd 8.4mml	4
▲	7	1226539	(00000000–)	Bushing, Flng, 8.3mmb 12.7mmd 17.8mml	2
▲	8	59658	(00000000–)	Screw, Hex, M8 X 1.25 X 35, Nl, Ss	2
▲	9	140027	(00000000–)	Washer, Flat, 0.35b 0.75d .04, Ss	2
▲	10	07786	(00000000–)	Nut, Hex, Std, M8 X 1.25, Ss	2
▲	11	1250474	(00000000–)	Linkage Wldt, Sqge, Adj	1
▲	12	1233352	(00000000–)	Bracket Wldt, Sqge, Adj	1
▲	13	1229329	(00000000–)	Pad, Rest, Sqge	1
▲	14	09120	(00000000–)	Screw, Flt, Soc, M5 X 0.80 X 16, 10.9	2
▲	15	1234041	(00000000–)	Pin, 0.25d, 10.45l	1
▲	16	08085	(00000000–)	Pin, Cotter, Hair, 0.31d .058 Wir	2
▲	17	1020341	(00000000–)	Screw, Hex, M8 X 1.25 X 20, Ss, Sems	1

▽ Assembly
▲ Included in Assembly

Fig. 22 – Recovery Tank Group

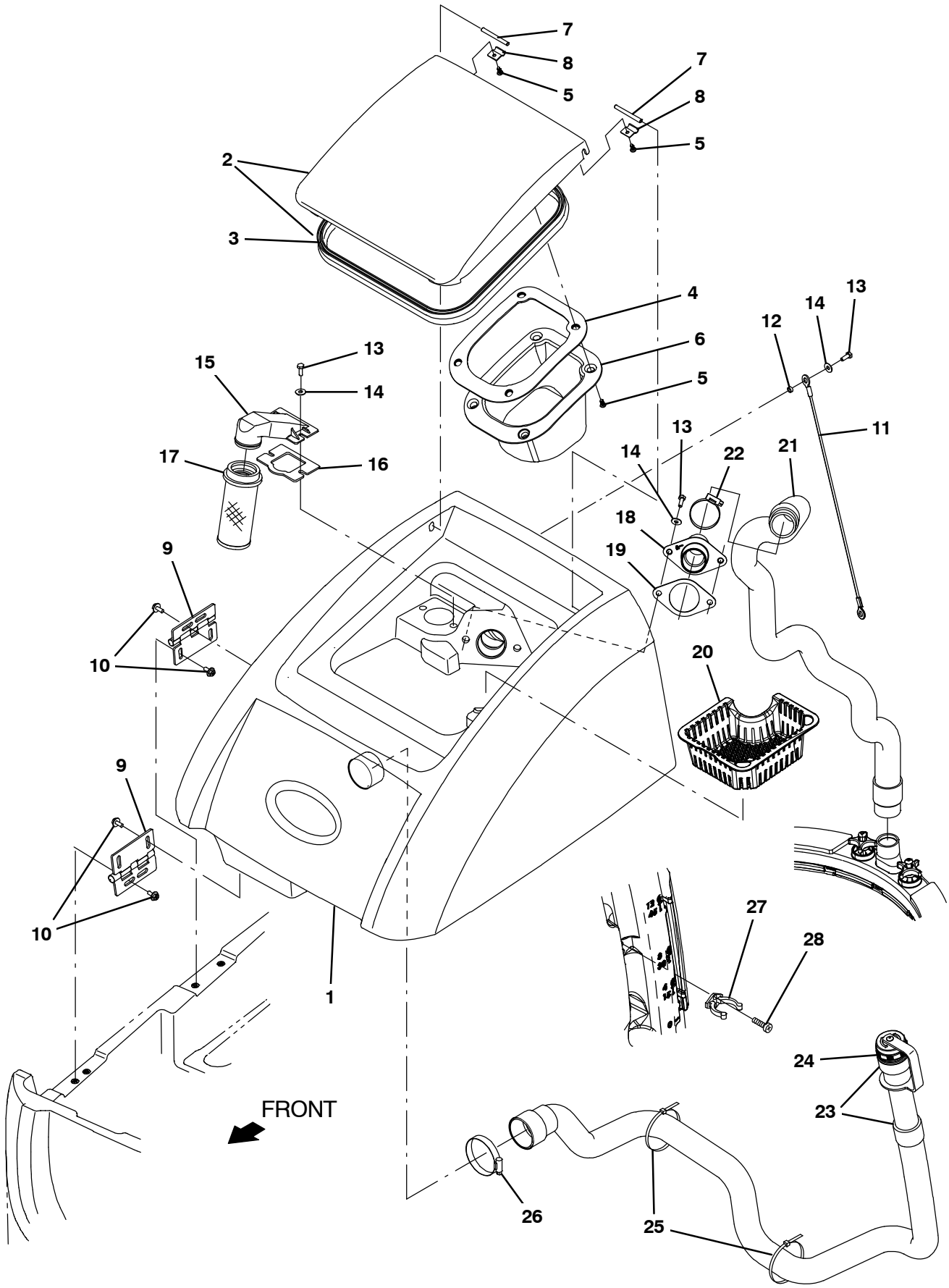

356751

Fig. 22 – Recovery Tank Group

	Ref.	Part No.	Serial Number	Description	Qty.
	1	9016753	(00000000–)	Kit, Tank, Recvy, Ci [T350]	1
▽	2	9016756	(00000000–)	Kit, Cover, Recvy, Ci[T350/SS350]	1
▲	3	9016825	(00000000–)	Seal, Afmkt, Bulb, 0.60D 0.19 Grip 08Ft	1
	4	1226891	(00000000–)	Gasket, Defl, Debris, Neo, .19t	1
	5	1018155	(00000000–)	Screw, Pan, Phl, M5 X 0.80 X 16, Tcut,Ss	6
	6	1226842	(00000000–)	Deflector, Debris, Inner	1
	7	1225244	(00000000–)	Pin, 0.25d 02.5l, 2cham, Ss	2
	8	1225239	(00000000–)	Clamp, Pin, Rnd .25d	2
	9	1224342	(00000000–)	Hinge Assy, 7.0 Pin, 11 Ga, 100l X 78w	2
	10	1034731	(00000000–)	Screw, Hex, M6 X 1.00 X 16, Sems, Ss	8
	11	391368	(00000000–)	Cable, Glv .09d 016.5l .38eye /.38eye	1
	12	80491	(00000000–)	Sleeve, P/M, 0.25b 0.38d 0.2l [430ss]	2
	13	11329	(00000000–)	Screw, Hex, M6 X 1.00 X 16, Nl, Ss	6
	14	01684	(00000000–)	Washer, Flat, 0.27b 0.69d .05, Ss	6
	15	1011777	(00000000–)	Mount, Float, Mold	1
	16	1013628	(00000000–)	Gasket, Mtg, Float, .125th, Neo, Adh	1
	17	630052	(00000000–)	Float Shut–Off (2)Ball 1.75d	1
	18	1219618	(00000000–)	Tube, Hose, Adapter, 1.5d [T500]	1
	19	1037106	(00000000–)	Gasket, Adapter, Hose .13, Neo	1
	20	1207357	(00000000–)	Tray, Debris, Tank, Recvy [T300]	1
▽		9040173	(00000000–)	Hose Kit, Recvy, Pvc, Ci	1
▲	21	1226410	(00000000–)	Hose Assy, W/2cuff, 1.5d 42.5l, Pvc	1
▲	22	11531	(00000000–)	Clamp, Hose, Wormdrive, 1.06–2.00d, .56w	1
▽		9040174	(00000000–)	Hose Kit, Recvy, Pyu, Ci	1
▲	21	1224431	(00000000–)	Hose Assy, W/2cuff,1.5d 34.5 1.5/1.5[Pu]	1
▲	22	11531	(00000000–)	Clamp, Hose, Wormdrive, 1.06–2.00d, .56w	1
▽		9040175	(00000000–)	Hose Kit, Drain, Pvc, Ci	1
▲▽	23	1226488	(00000000–)	Hose Assy, Drain, 1.5d X 40.0l [Pvc] [Black] (62.2L Stretched/ 40L Relaxed)	1
▲▲	24	1218955	(00000000–)	Cap, Drain Assy [Black]	2
▲	25	49263	(00000000–)	Tie, Cable, Nyl, 11.4l .19w 3.0 Max D	2
▲	26	14432	(00000000–)	Clamp, Hose, Wormdrive, 1.81–2.75d, .50w	1
▽		9040176	(00000000–)	Hose Kit, Drain, Pyu, Ci	1
▲▽	23	1226633	(00000000–)	Hose Assy, Drain, 1.5d X 62.2l [Pu] [Gray] (62.2L Stretched/ 40L Relaxed)	1
▲▲	24	1219134	(00000000–)	Cap, Drain Assy [Gray]	2
▲	25	49263	(00000000–)	Tie, Cable, Nyl, 11.4l .19w 3.0 Max D	2
▲	26	14432	(00000000–)	Clamp, Hose, Wormdrive, 1.81–2.75d, .50w	1
	27	1001992	(00000000–)	Clip, Grip, Hose, 1.63–1.87, Blk Nyl	1
	28	607006	(00000000–)	Screw, Trs, M4 X 0.70 X 12, Phl, Pl	2

▽ Assembly

▲ Included in Assembly

Fig. 23 – Vacuum Fan Group

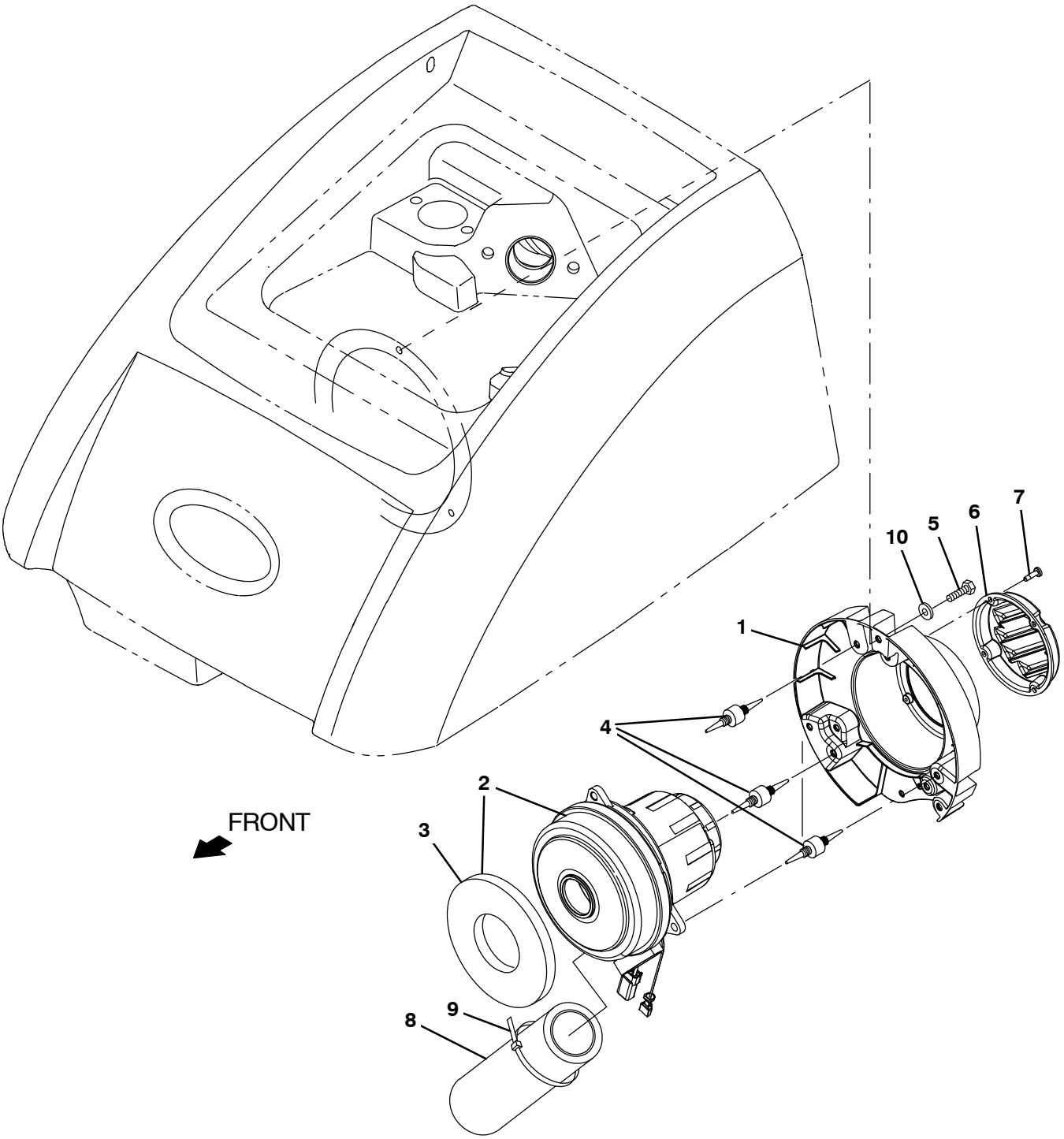

356764

Fig. 23 – Vacuum Fan Group

	Ref.	Part No.	Serial Number	Description	Qty.
	1	1207368	(00000000–)	Mount, Vacfan, 5.7/6.6	1
▽	2	9016755	(00000000–)	Fan Kit, Vacuum, Ci [T350/SS350]	1
▲	3	100038	(00000000–)	Gasket, .50, 02.63id 05.75od, Adh [Epdm]	1
▲		1206774	(00000000–)	Brush Kit, Motor, Fan	1
	4	1062016	(00000000–)	Isolator, Vib, .75d	3
	5	11329	(00000000–)	Screw, Hex, M6 X 1.00 X 16, Nl, Ss	3
	6	1209342	(00000000–)	Cover, Inlet, Vac, Vented	1
	7	1043573	(00000000–)	Screw, #10–14 X 0.675, Spl[Shcs,Selftap]	4
▽		9040172	(00000000–)	Muffler Kit, Fan, Vacuum, Ci (Option)	1
▲	8	1068577	(00000000–)	Muffler, Exhaust, Vacfan, 150mml [T2/T3]	1
▲	9	130773	(00000000–)	Tie, Cable, Nyl, 11.0l, .14w, 3.0 Max. D	2
	10	01684	(00000000–)	Washer, Flat, 0.27B 0.69D .05, Ss	3

▽ Assembly

▲ Included in Assembly

Fig. 24 – Solution Tank Group

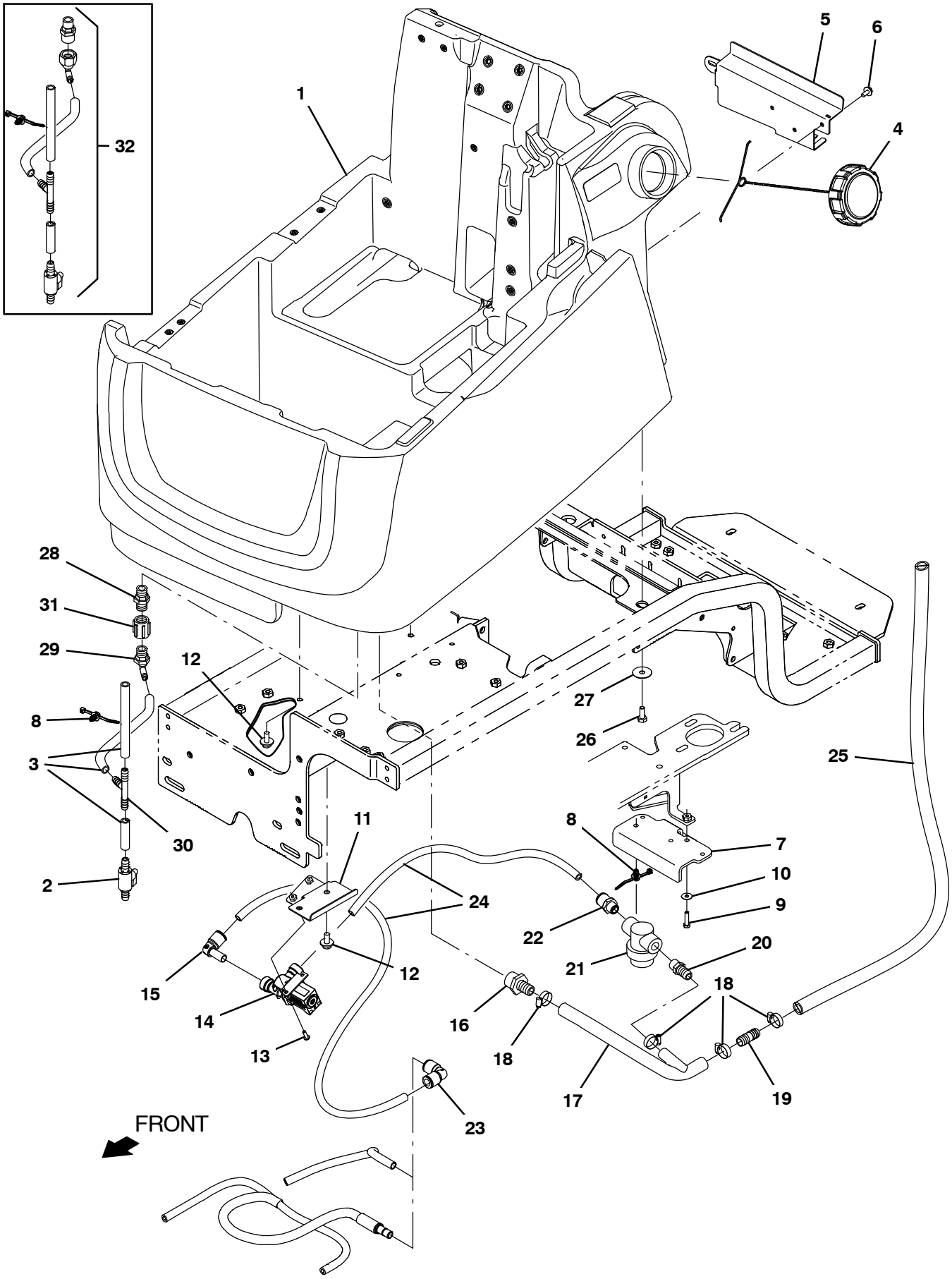

356752

Fig. 24 – Solution Tank Group

Ref.	Part No.	Serial Number	Description	Qty.
1	9017487	(00000000–)	Kit, Tank, Soltn, W/O ECH20, Ci [T350]	1
1	9016751	(00000000–)	Kit, Tank, Soltn, W/ECH20[T350]	1
2	1233940	(00000000–)	Valve, Ball, Bm06/Bm06, Pvc, W/Handle	1
3	1014939	(00000000–)	Hose, Afmkt, Pvc, Clr, 0.38id, 02ft	1
4	1011885	(00000000–)	Cap, Tank	1
5	1224641	(00000000–)	Plate, Sppt, Hose	1
6	1034731	(00000000–)	Screw, Hex, M6 X 1.00 X 16, Sems, Ss	2
7	1226094	(00000000–)	Bracket, Mtg, Filter	1
8	1210807	(00000000–)	Wire, Tie [W/.25” Fir Tree Clip]	5
9	1016005	(00000000–)	Screw, Hex, M6 X 1.00 X 25, Nl, Fl, Ss	2
10	01684	(00000000–)	Washer, Flat, 0.27b 0.69d .05, Ss	2
11	1231628	(00000000–)	Plate Wldt, Solenoid	1
12	1020341	(00000000–)	Screw, Hex, M8 X 1.25 X 20, Ss, Sems	6
13	1205799	(00000000–)	Screw, Btn, M5 X 0.8 X 16, 8.8, Nl, Torx	2
14	1211424	(00000000–)	Valve, Water, Solenoid, 24vdc Qf08/Qf08	1
15	1212809	(00000000–)	Fitting, Plstc, E90, Qf08/Qm08	1
16	71628	(00000000–)	Fitting, Plstc, Str, Bm10/Pm12 [Nylon]	1
17	1228621	(00000000–)	Tube, Split, Solution Delivery	1
18	54333	(00000000–)	Clamp, Hose, Wormdrive, 0.31–0.88d, .31w	4
19	365164	(00000000–)	Fitting, Plstc, Str, Bm10/Bm10	1
20	64743	(00000000–)	Fitting, Plstc, Str, Bm08/Pm06	1
21	1211537	(00000000–)	Filter, In–Line, Pf06/Pf06 080m 2.6l Epd	1
22	1212813	(00000000–)	Fitting, Plstc, Str, Qf08/Pm06	1
23	1221945	(00000000–)	Fitting, Plstc, E90, Qf08/Qf08	1
24	9014145	(00000000–)	Hose, Afmkt, Pe, .375id .50od, 05ft	1
25	1035352	(00000000–)	Hose, Afmkt, Pvc, Clr, 0.62id, 08ftbox	1
26	12273	(00000000–)	Screw, Hex, M8 X 1.25 X 20, Nl, Ss	1
27	30013	(00000000–)	Washer, Flat, 0.31, Fendr	1
28	1247602	(10945380–)	Fitting, Plstc. Str, Pm06/Pm06, Pyp	1
29	1247579	(10945380–)	Fitting, Plstc, E90, Bm06/Pm06, Pyp	1
30	1247259	(10945380–)	Fitting, Plstc, Tee, Bm06/Bm06/Bm06, Pyp	1
31	1247605	(10945380–)	Fitting, Plstc, Str, Pf06/Pf06, Pyp	1
32	9019340	(00000000–10945379)	Maint Kit, Drain, Compartment, Battery	1

Fig. 25 – Electrical Box Group

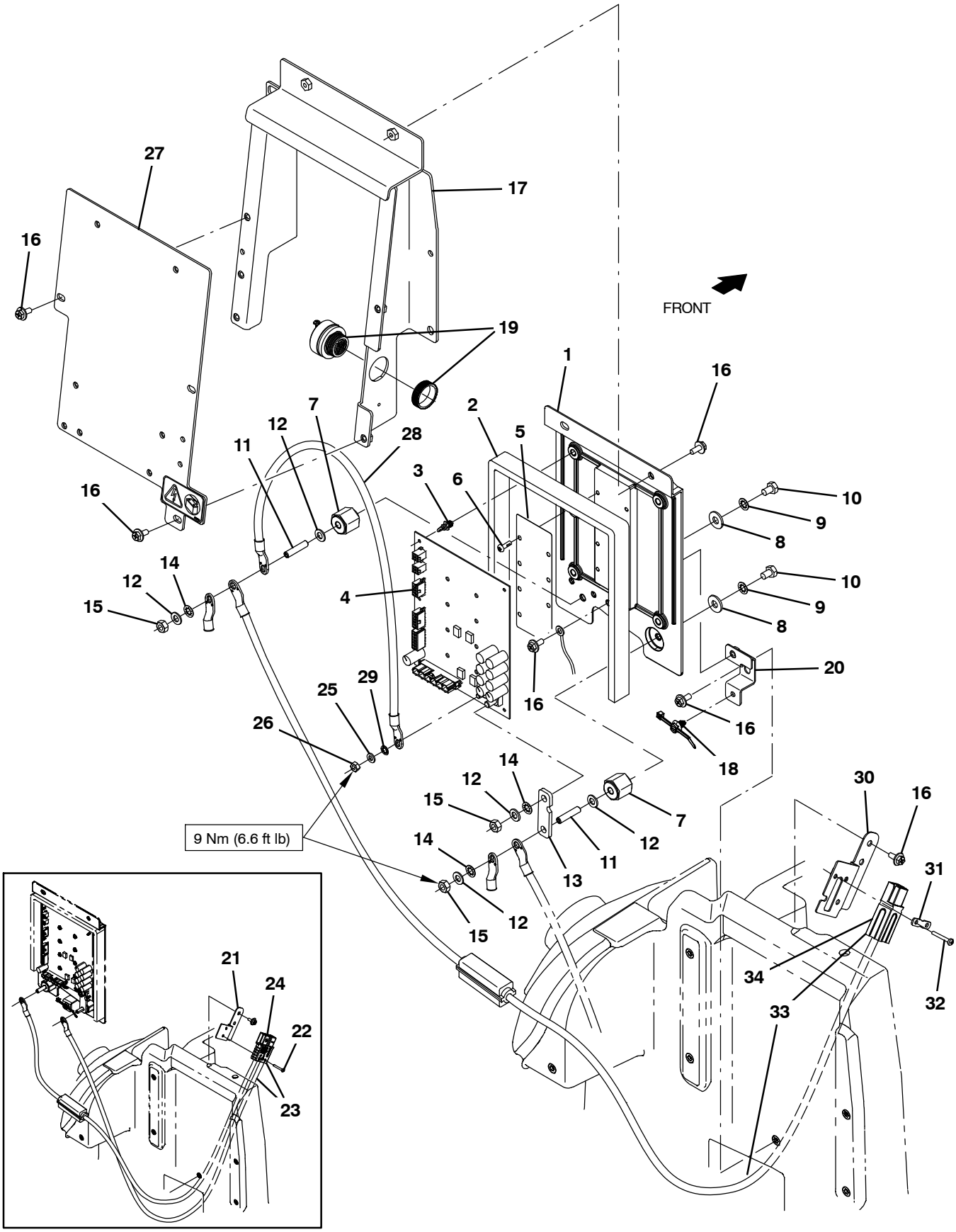

356765

Fig. 25 – Electrical Box Group

	Ref.	Part No.	Serial Number	Description	Qty.
	1	1210631	(00000000–)	Heatsink, Mtg, Circuitboard, 12.1 X 08.6	1
	2	1208628	(00000000–)	Gasket, Cover, Circuitboard	1
	3	1209448	(00000000–)	Standoff, Circuitboard, .25	5
	4	9040084*	(00000000–)	Board kit, Scb, Std, Ci	1
	5	1210381	(00000000–)	Circuitboard, Silpad [Vw, Lower]	1
	6	1205799	(00000000–)	Screw, Btn, M5 X 0.8 X 16, 8.8, Nl, Torx	8
	7	1205345	(00000000–)	Stand–Off, Wir, M8, Insulator, Panel	2
	8	01685	(00000000–)	Washer, Flat, 0.38b 0.88d .08, Ss	2
	9	43952	(00000000–)	Washer, Lock, Int, 0.31, Ss	2
	10	386868	(00000000–)	Screw, Hex, M8 X 1.25 X 12, Ss	2
	11	607461	(00000000–)	Screw, Set, M8 X 1.25 X 35, Nl	2
	12	1209373	(00000000–)	Washer, Flat, M8.4b X 16d X 1.6, Brs	5
	13	1212780	(00000000–)	Busbar, 125a 0.188 0.750w 2.638l	1
	14	43952	(00000000–)	Washer, Lock, Int, 0.31, Ss	3
	15	41361	(00000000–)	Nut, Hex, Std, M8 X 1.25, Brs	3
	16	1034731	(00000000–)	Screw, Hex, M6 X 1.00 X 16, Sems, Ss	7
	17	1226948	(00000000–)	Cover Wldt, Control	1
	18	1210807	(00000000–)	Wire, Tie [W/.25” Fir Tree Clip]	5
	19	1021290	(00000000–)	Alarm, Warning [Sonalert, St628]	1
	20	1225906	(00000000–)	Bracket Wldt, Heat Sink	1
	21	1224826	(00000000–10897476)	Plate Wldt, Mount, Battery Disconnect	1
	22	33931	(00000000–10897476)	Screw, Pan, Phl, M4 X 0.70 X 30, Ss	2
▽	23	1075580	(00000000–10897476)	Cable, Battery, Fuse [Sb120, 100A] (Replaced by 9018173)	1
▲	24	605387	(00000000–10897476)	Connector, Anderson, 050A, Red [W/o Con]	1
	25	1061918	(00000000–)	Washer, Flat, 0.25b 0.47d .06, Brs	1
	26	1061910	(00000000–)	Nut, Hex, Std, M6 X 1.00, Brs	1
	27	9016800	(00000000–)	Plate Wldt, Mtg, Charger, Na W/Label	1
	27	9016801	(00000000–)	Plate Wldt, Mtg, Charger, Ce Jp W/Label	1
	28	1074945	(00000000–)	Cable, 04Ga 15.0L Red [M8 Ring/M6 Ring]	1
	29	07515	(00000000–)	Washer, Lock, Int, 0.25, Ss	1
	30	1239877	(10897477–)	Plate Wldt, Mount, Battery Disconnect	1
	31	1240380	(10897477–)	Plate, Washer, Battery, Connector	1
	32	33931	(10897477–)	Screw, Pan, Phl, M4 X 0.70 X 30, Ss	2
▽	33	1076392	(10897477–)	Cable, Battery, Fuse [Pp120, 10A]	1
▲	34	1020446	(10897477–)	Connector, Anderson, 1321 Series	1

***** Requires Tennant *True* service or an authorized Tennant service provider.

Fig. 26 – Electrical Group

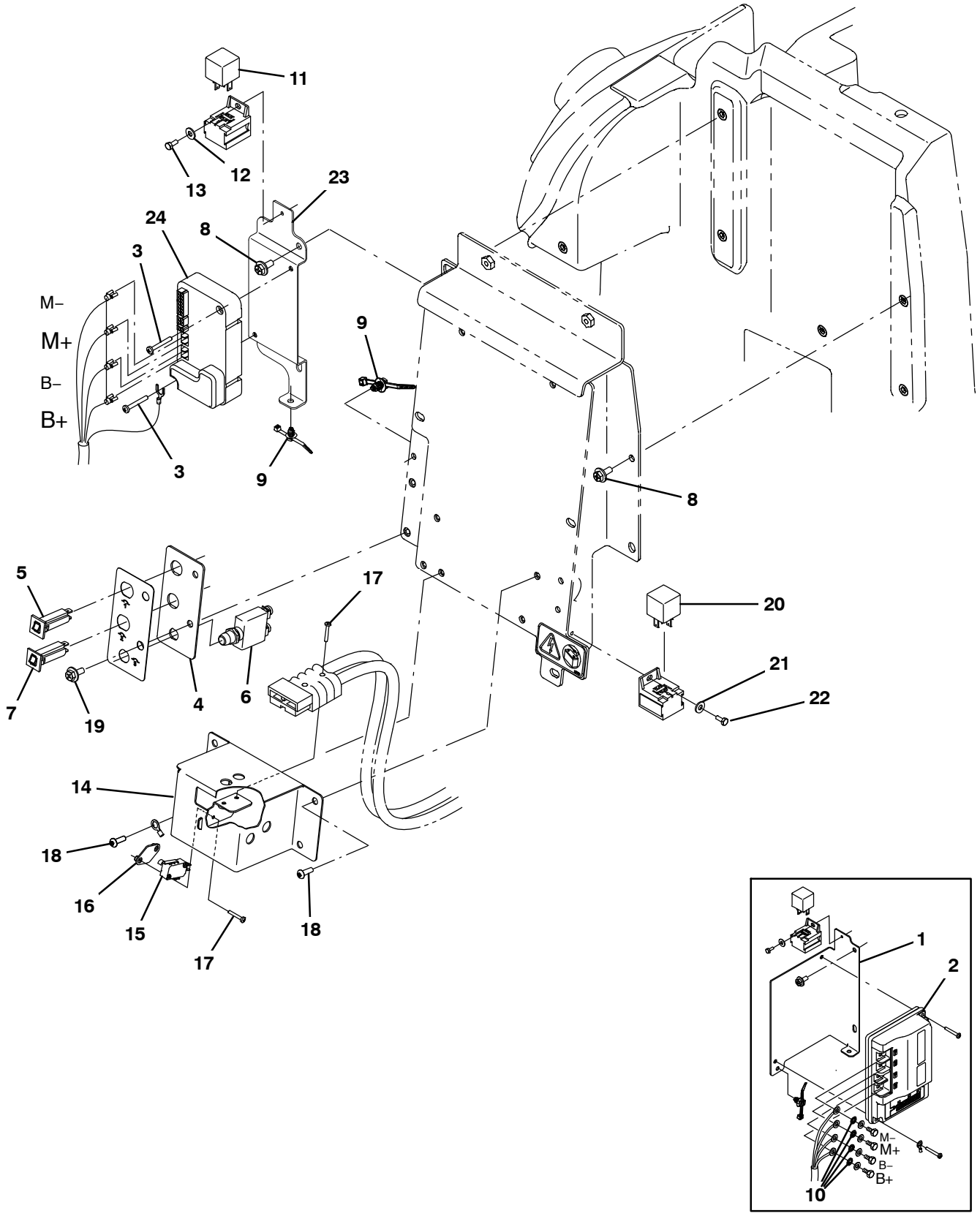

356753

Fig. 26 – Electrical Group

Ref.	Part No.	Serial Number	Description	Qty.
1	1225881	(00000000–11052764)	Bracket Wldt, Mtg, I–Drive	1
2	9016821	(00000000–11052764)	Controller Kit, Spd, Ci [T350/SS350]	1
3	33931	(00000000–)	Screw, Pan, Phl, M4 X 0.70 X 30, Ss	2
4	1225495	(00000000–)	Bracket, Mtg, Circuitbreaker	1
5	1208816	(00000000–)	Circuitbreaker, 04.0a, Resetable	1
6	383730	(00000000–)	Circuitbreaker, 70.0a	1
7	1064187	(00000000–)	Circuitbreaker, 10.0A, Resetable (ec–H20 OPTION)	1
8	1034731	(00000000–)	Screw, Hex, M6 X 1.00 X 16, Sems, Ss	6
9	1210807	(00000000–)	Wire, Tie [W/.25” Fir Tree Clip]	1
10	32982	(00000000–11052764)	Washer, Lock, Int, 0.25	4
11	49309	(00000000–)	Relay, 24vdc, 015a, Spdt No	1
12	01683	(00000000–)	Washer, Flat, 10, Ss	1
13	16944	(00000000–)	Screw, Hex, M4 X 0.70 X 10, Fmg	1
14	1228332	(00000000–)	Cover Wldt, Socket, Off–Board Charger	1
15	1215716	(00000000–)	Switch, 0.1a, Spdt[Micro, Gold Contacts]	1
16	1013705	(00000000–)	Plate, Thread, Switch, M3 Nut, 96hr Pl	1
17	06922	(00000000–)	Screw, Pan, Phl, M3 X 0.50 X 20, 4.8	4
18	1205799	(00000000–)	Screw, Btn, M5 X 0.8 X 16, 8.8, Nl, Torx	4
19	1034731	(00000000–)	Screw, Hex, M6 X 1.00 X 16, Sems, Ss	2
20	49309	(00000000–)	Relay, 24vdc, 015a, Spdt No (ec–H20 OPTION)	1
21	01683	(00000000–)	Washer, Flat, 10, Ss (ec–H20 OPTION)	1
22	16944	(00000000–)	Screw, Hex, M4 X 0.70 X 10, Fmg (ec–H20 OPTION)	1
23	1258175	(11052765–)	Bracket Wldt, Mtg, I–Drive	1
24	9015776	(11052765–)	Drive Module Kit, Ci [T500/E/Ss500]	1

Fig. 27 – Electrical Schematic

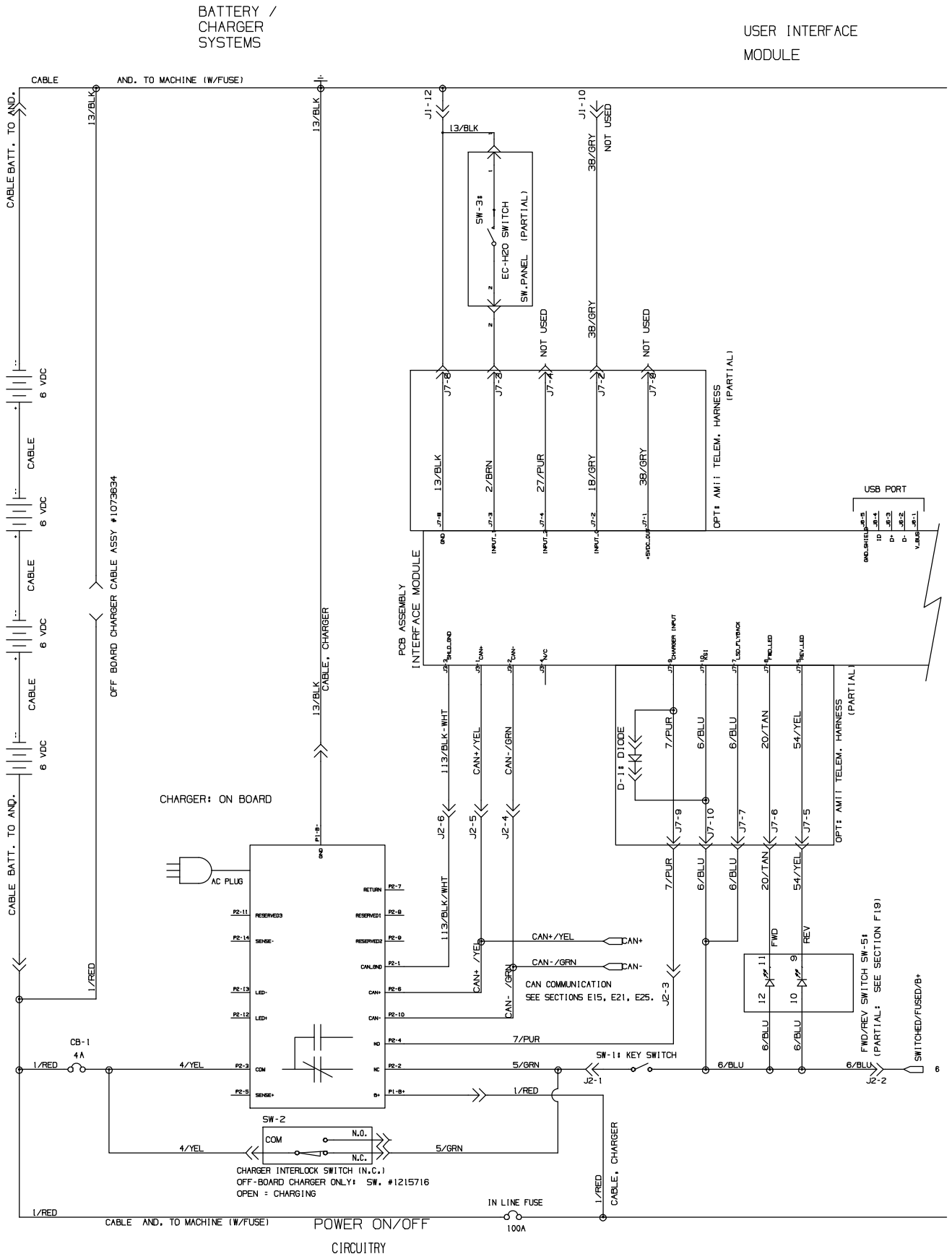

356786 – 1075602

Fig. 27 – Electrical Schematic

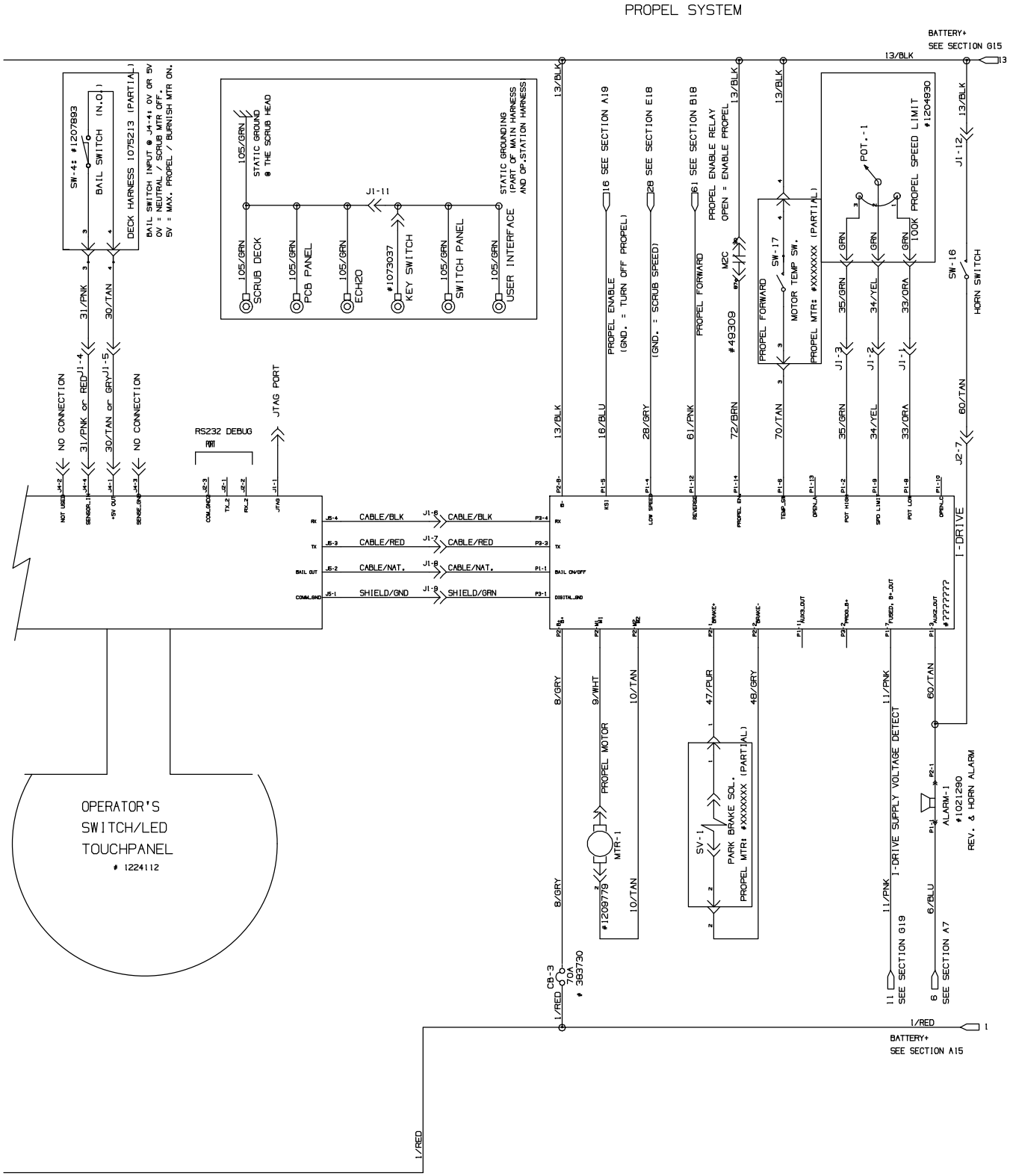

356786 – 1075602

Fig. 27 – Electrical Schematic

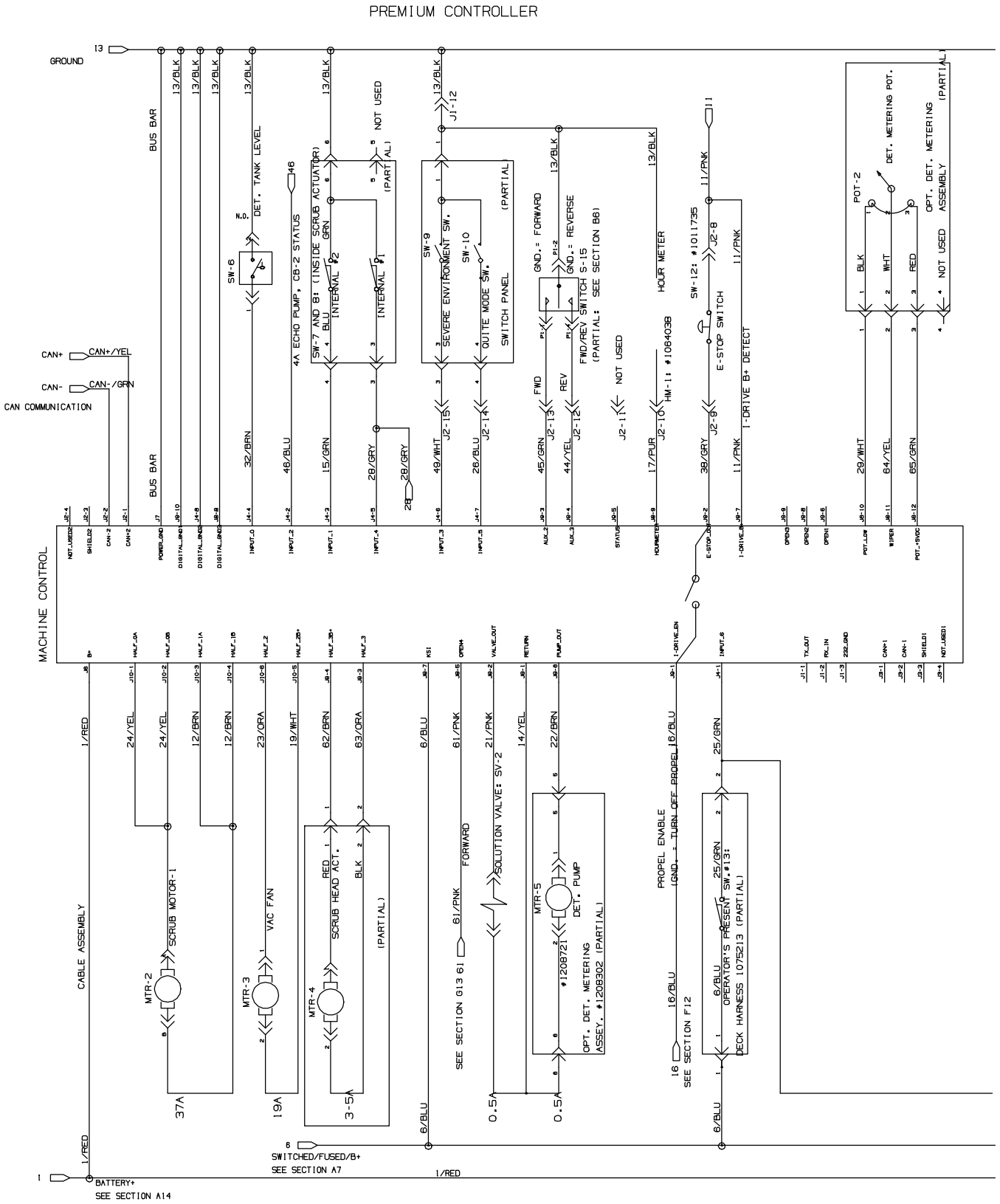

356786 – 1075602

Fig. 27 – Electrical Schematic

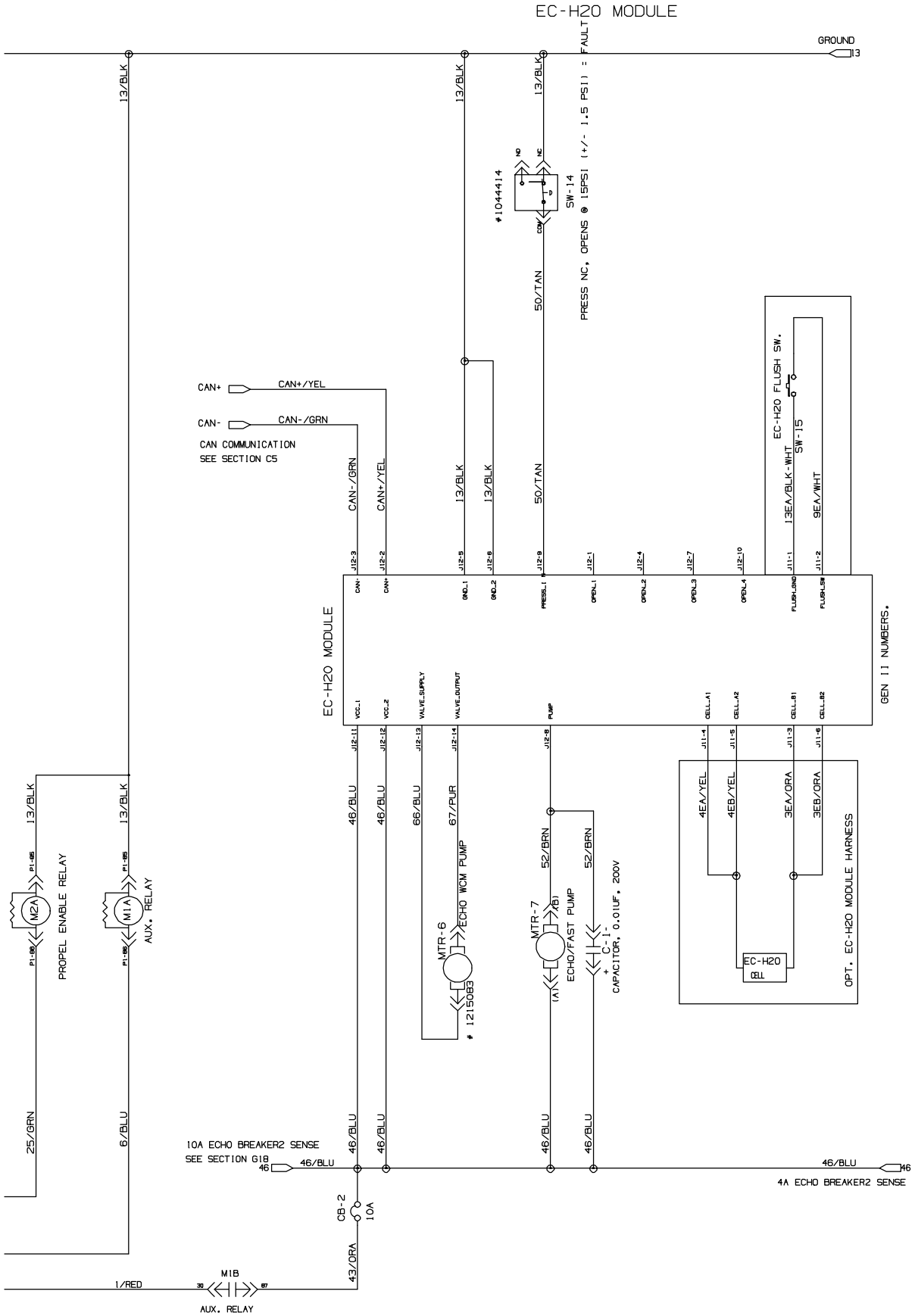

356786 – 1075602

Fig. 27 – Electrical Schematic

ABW MODULE

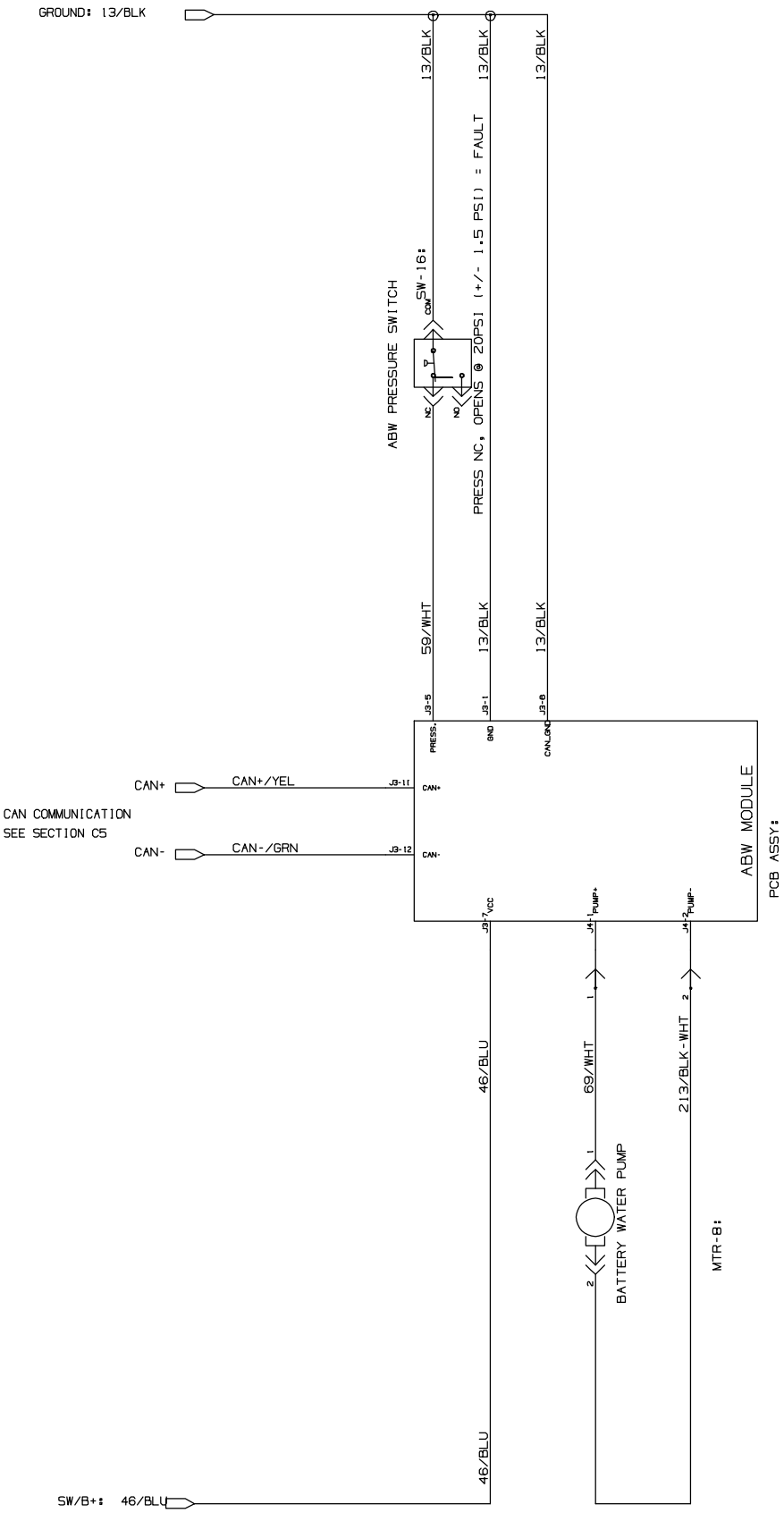

356786 – 1075602

Fig. 28 – Electrical Wire Harnesses Group

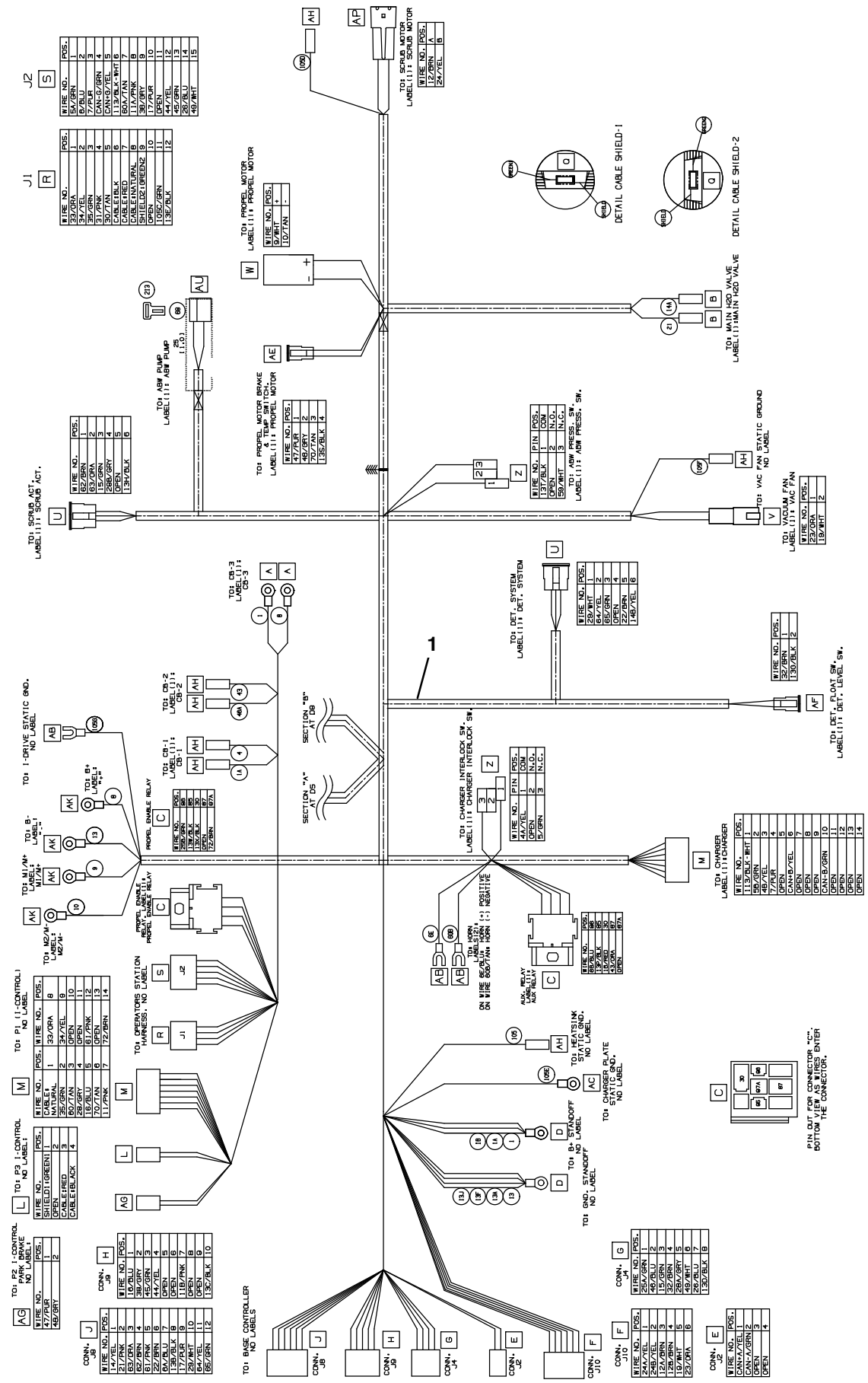

Fig. 28 – Electrical Wire Harnesses Group

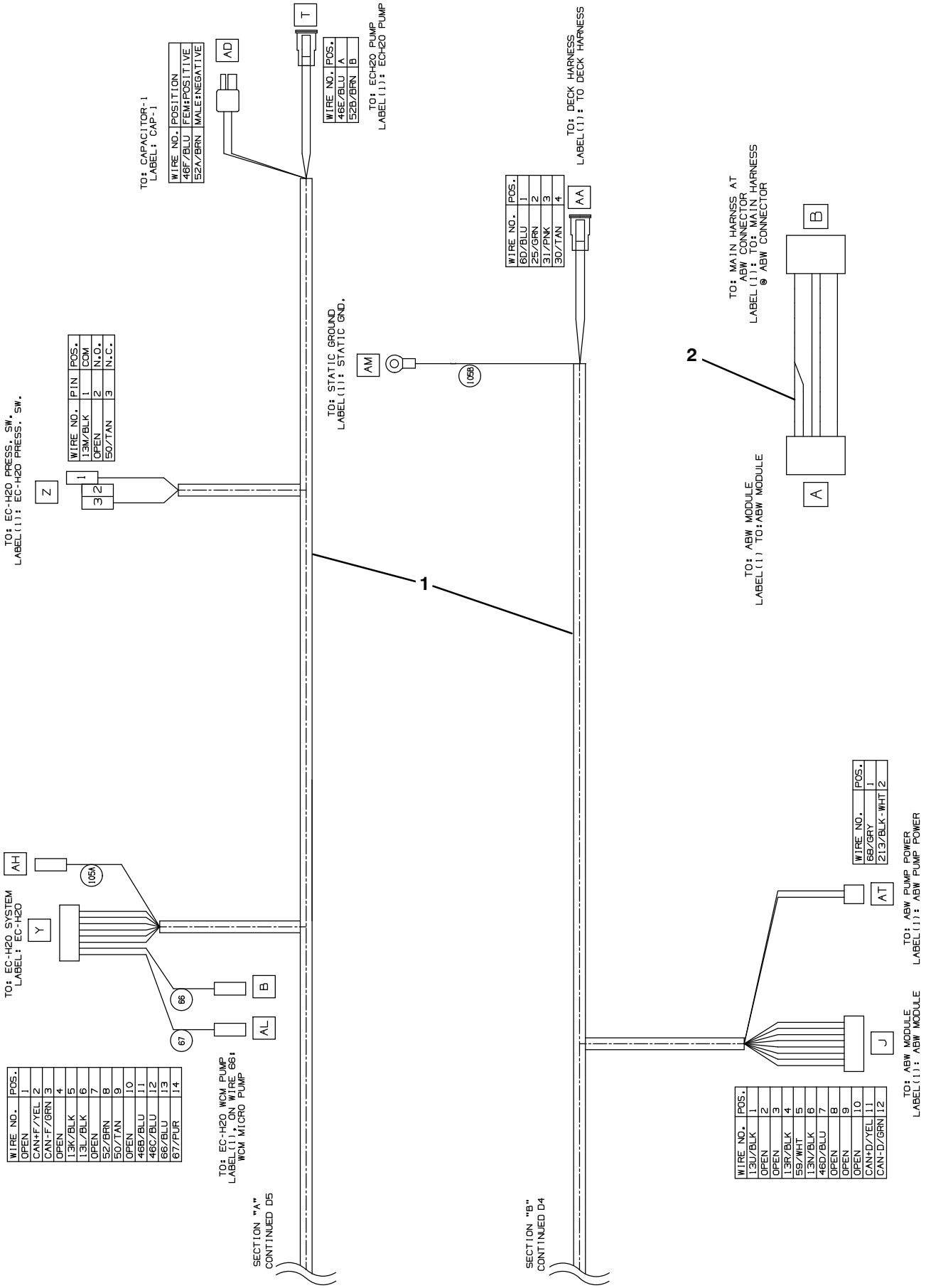

Fig. 28 – Electrical Wire Harnesses Group

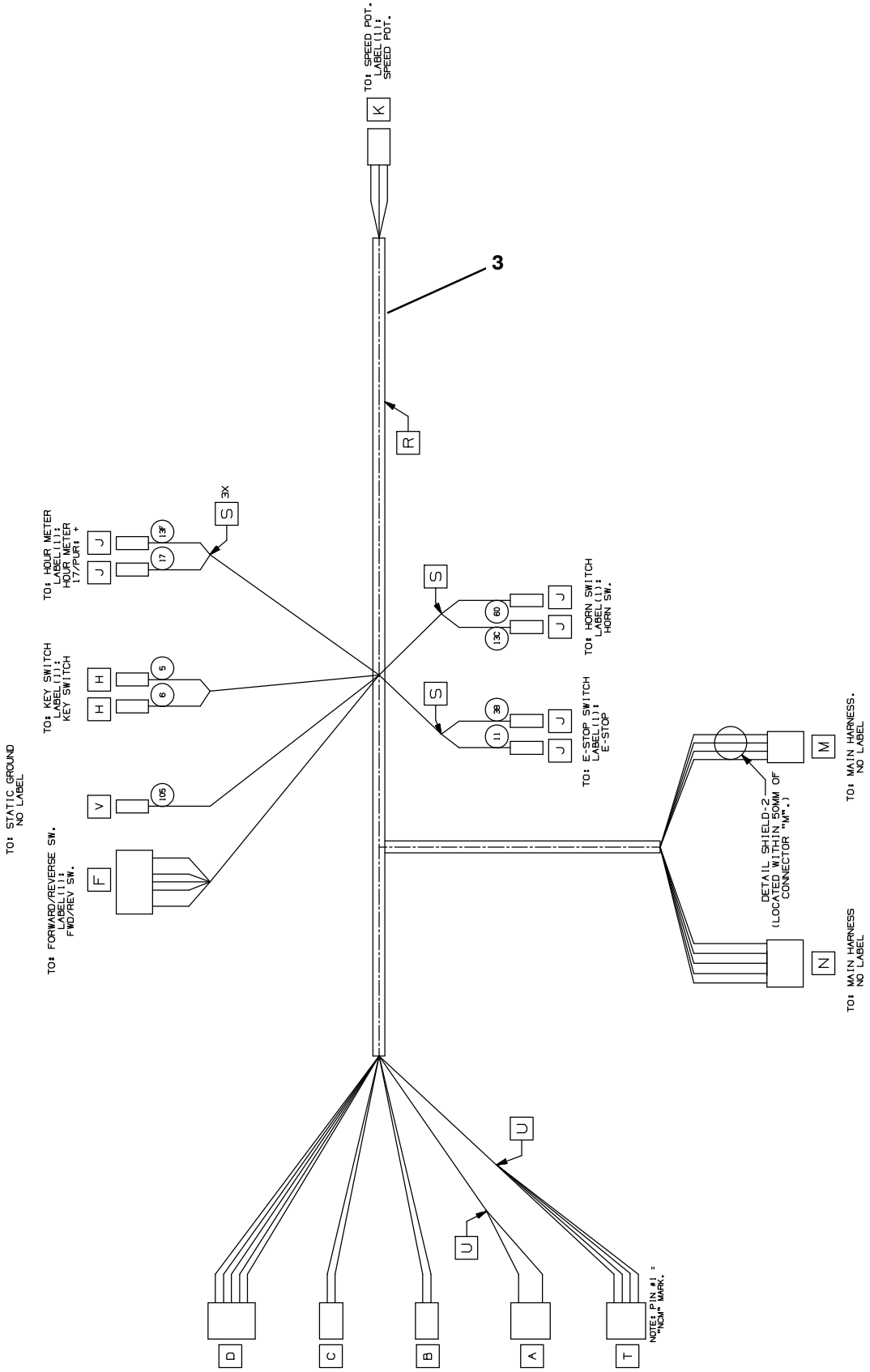

356785

Fig. 28 – Electrical Wire Harnesses Group

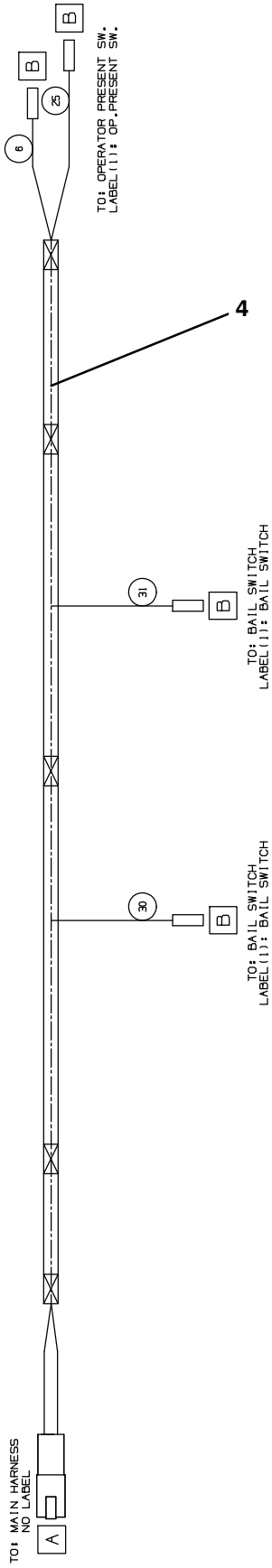

356785

Fig. 28 – Electrical Wire Harnesses Group

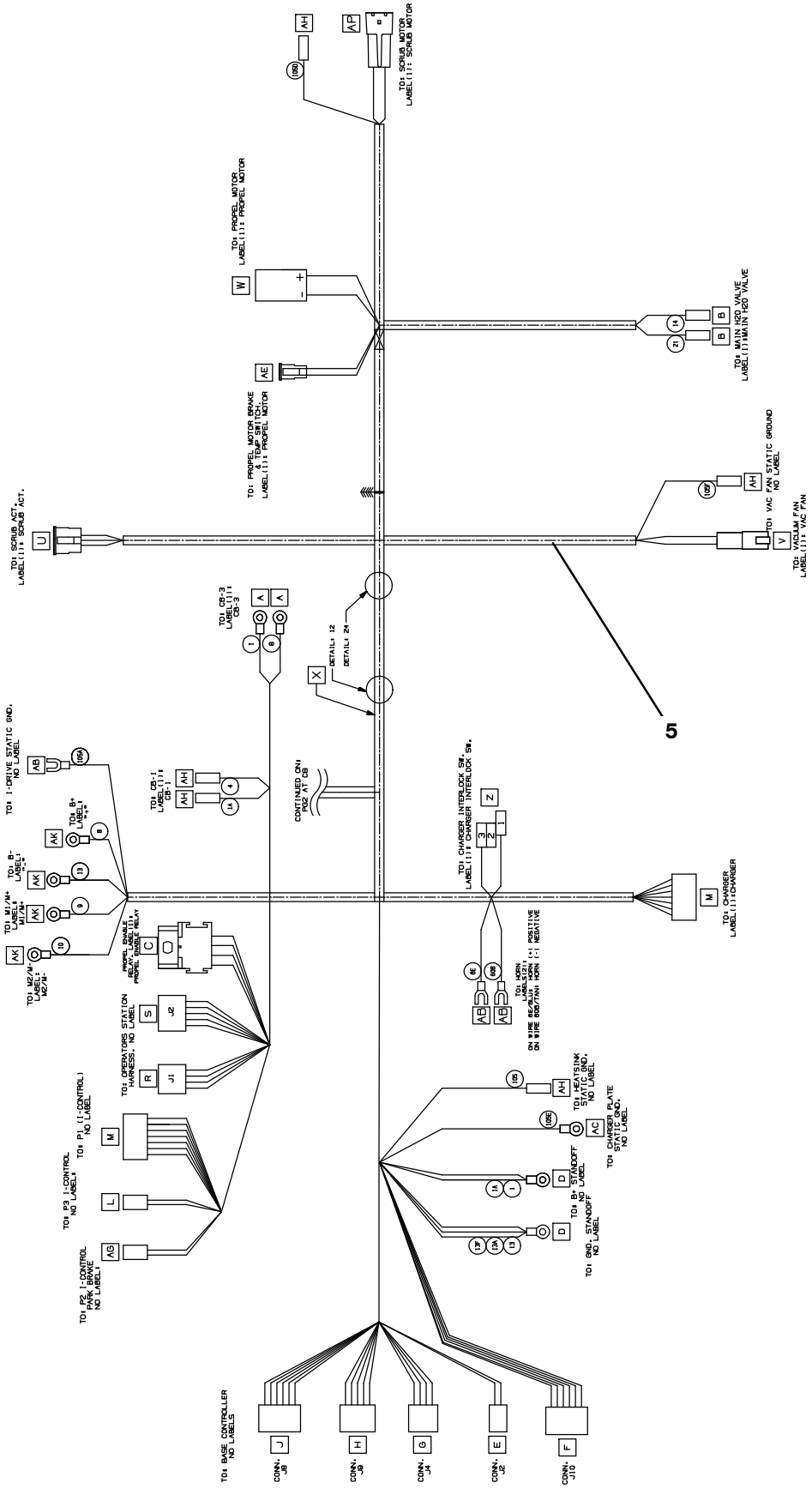

356785

Fig. 28 – Electrical Wire Harnesses Group

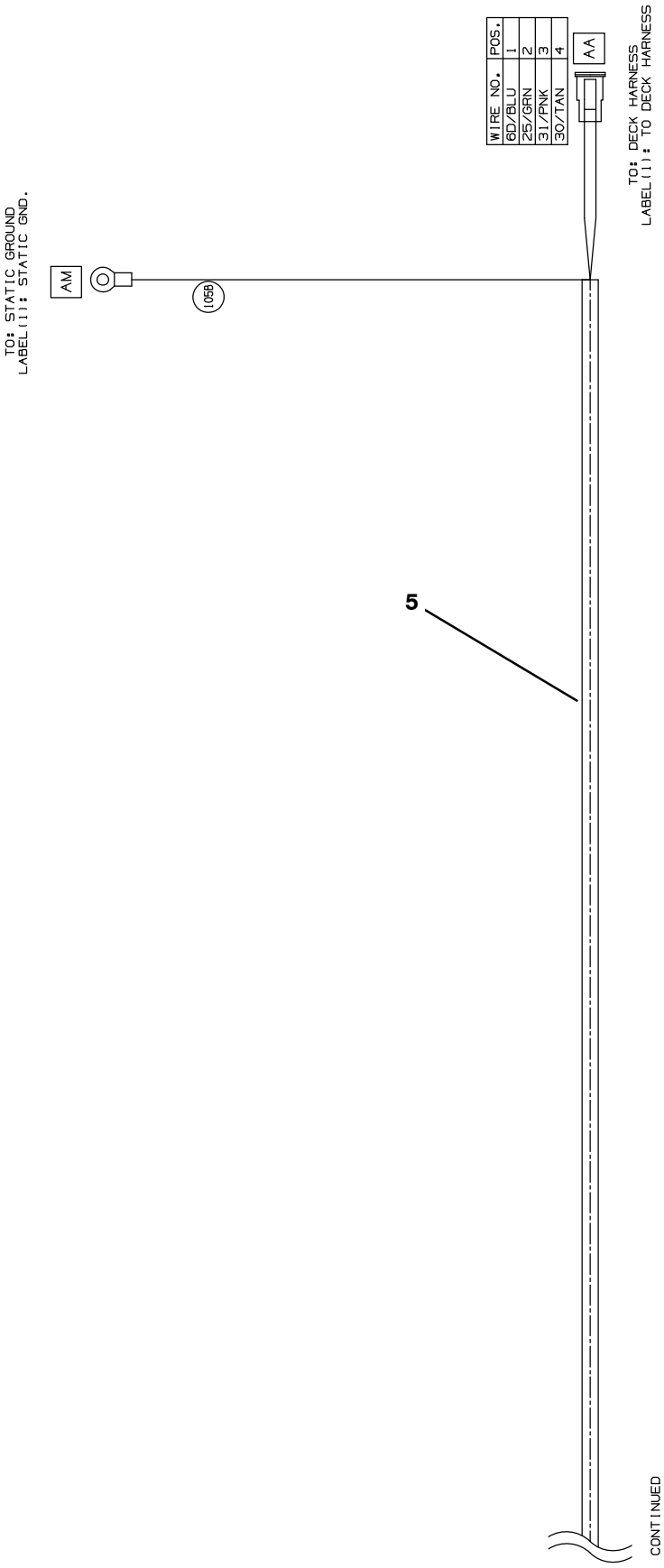

356785

Fig. 28 – Electrical Wire Harnesses Group

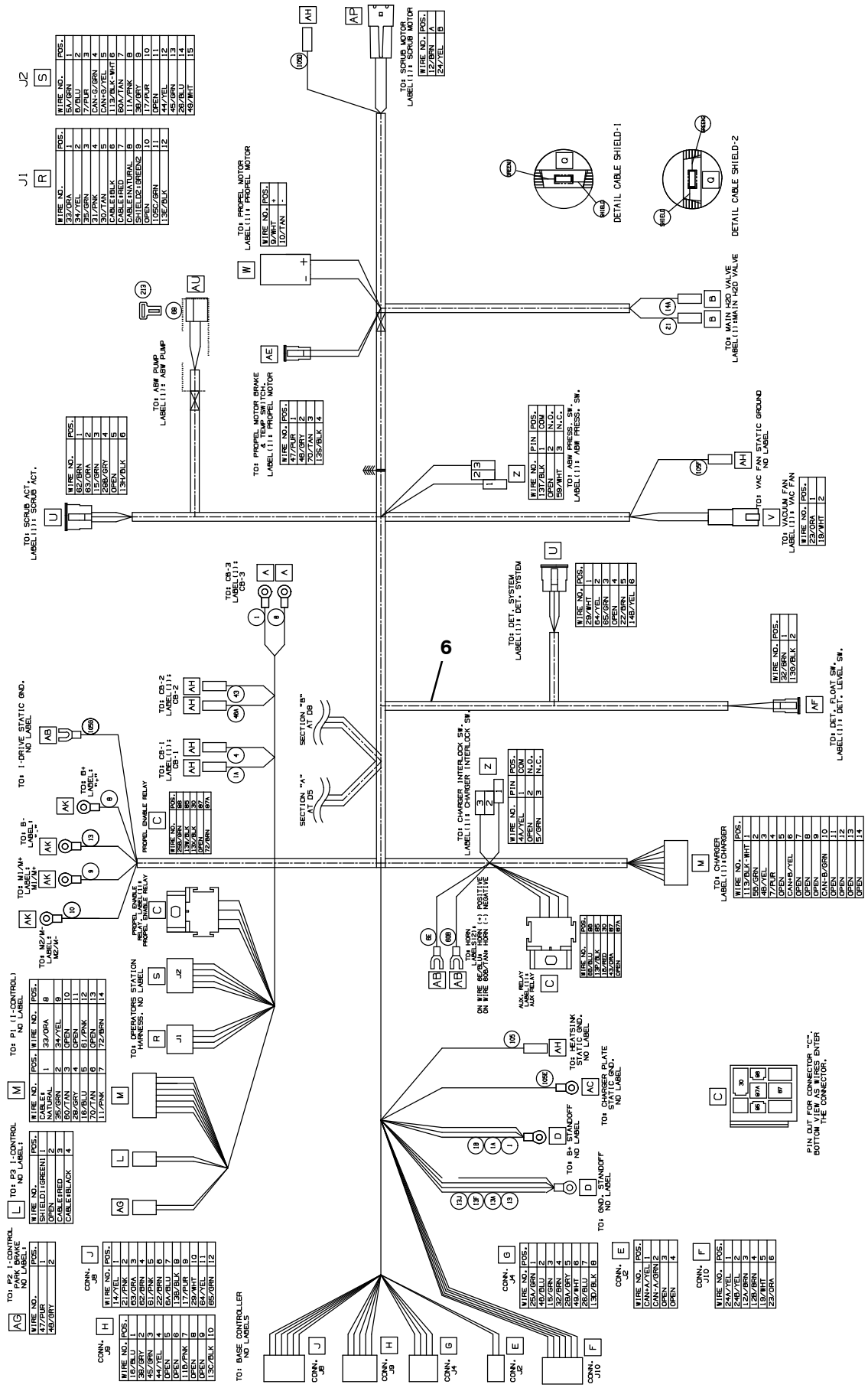

Fig. 28 – Electrical Wire Harnesses Group

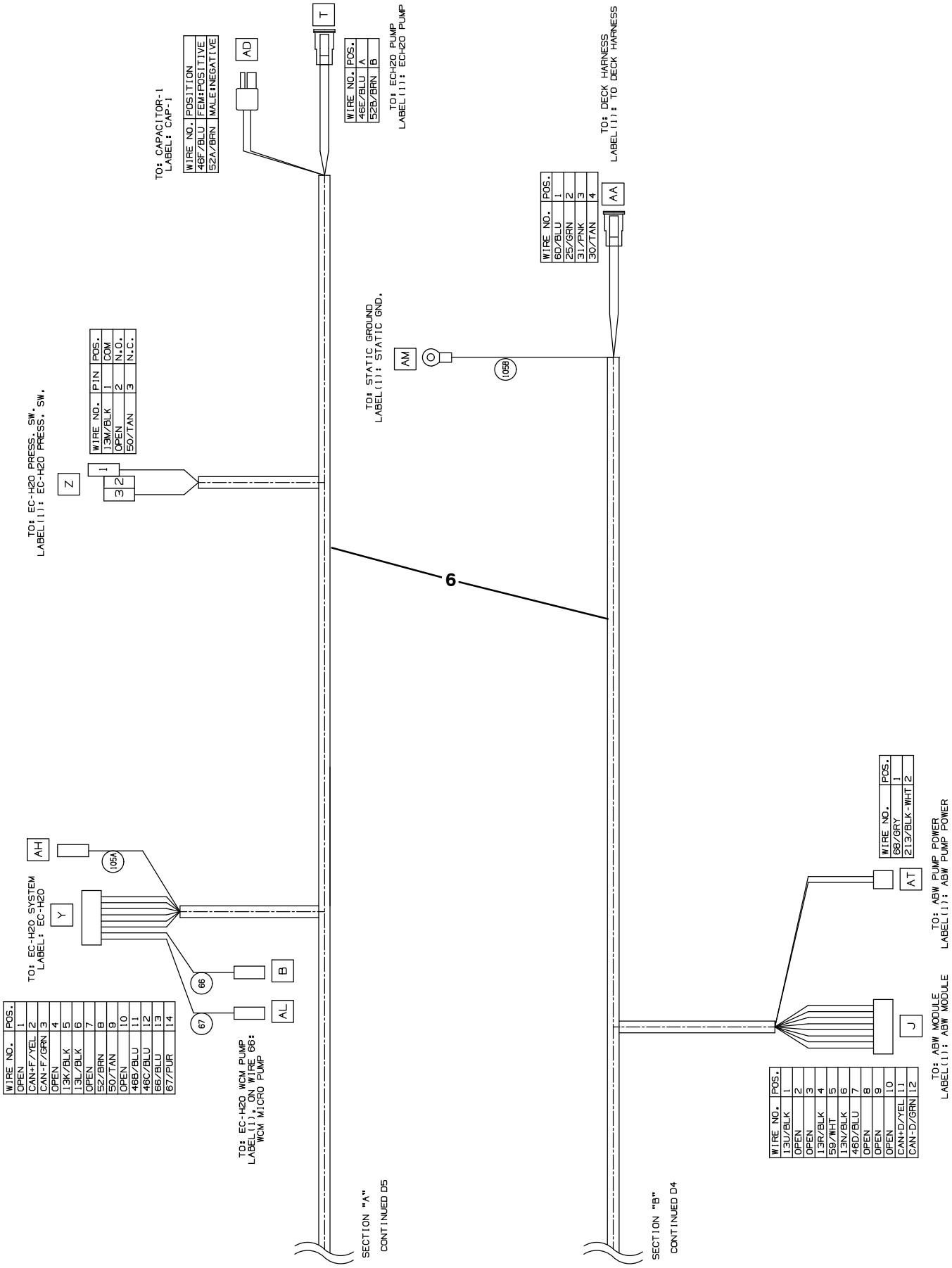

Fig. 28 – Electrical Wire Harnesses Group

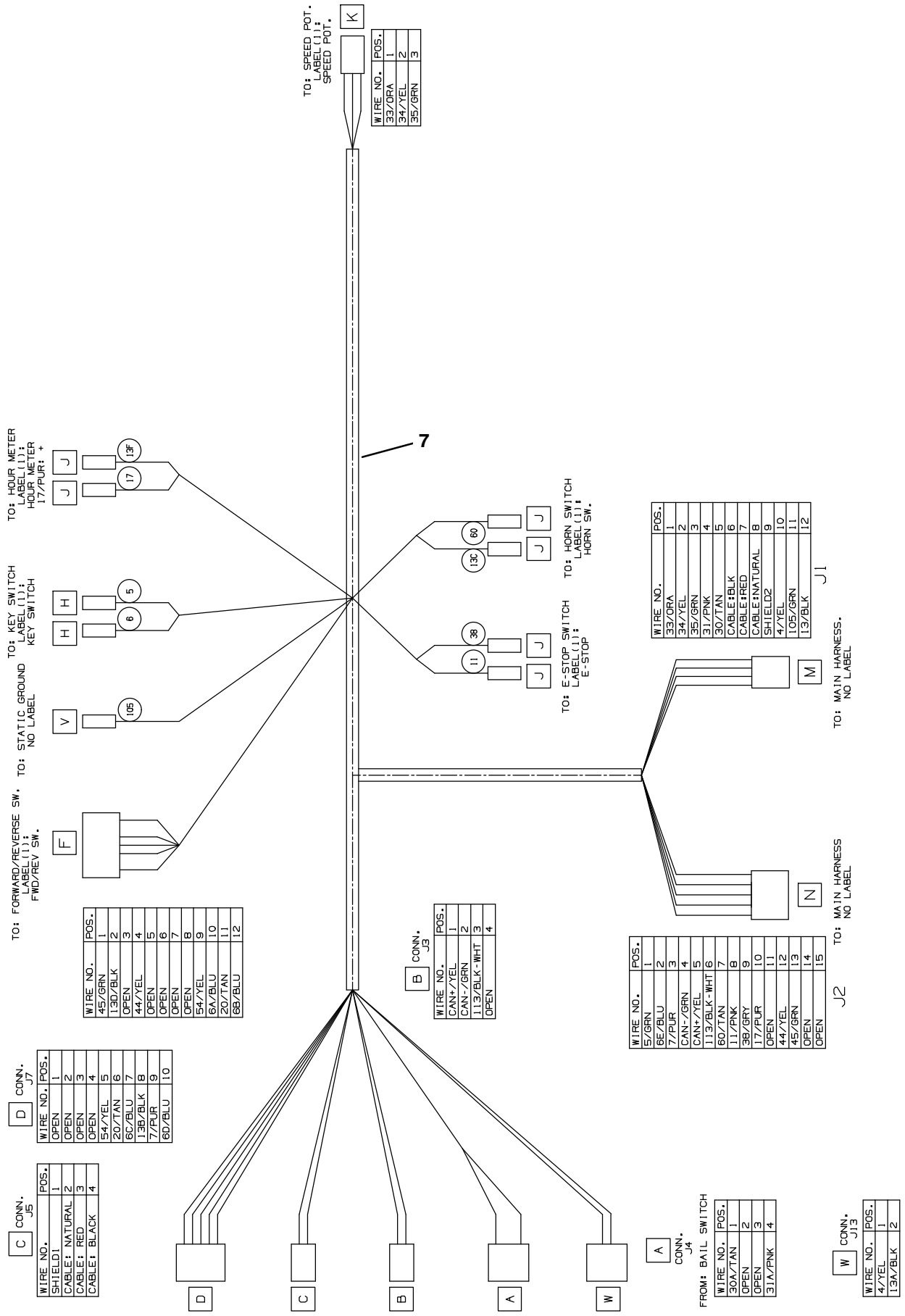

Fig. 28 – Electrical Wire Harnesses Group

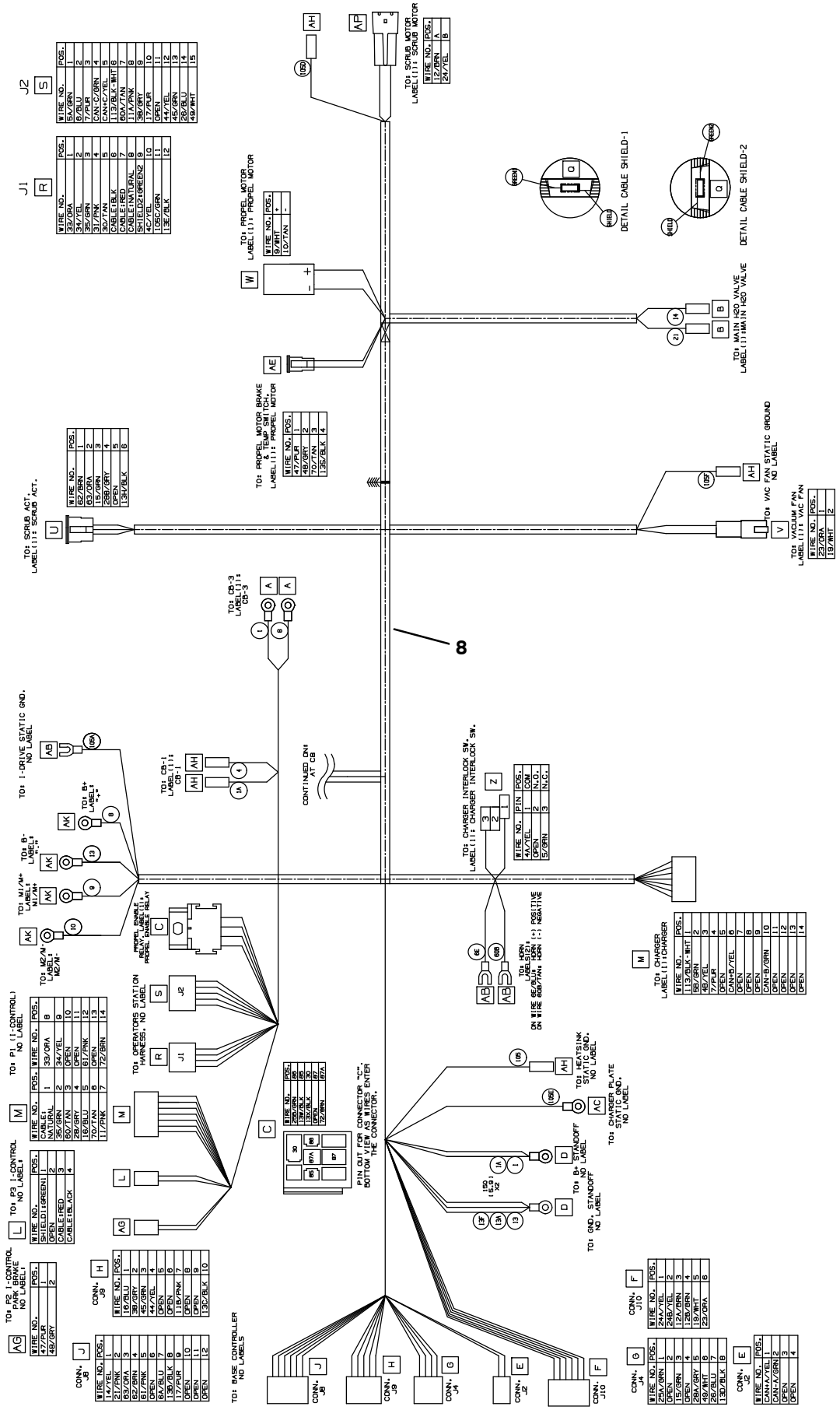

Fig. 28 – Electrical Wire Harnesses Group

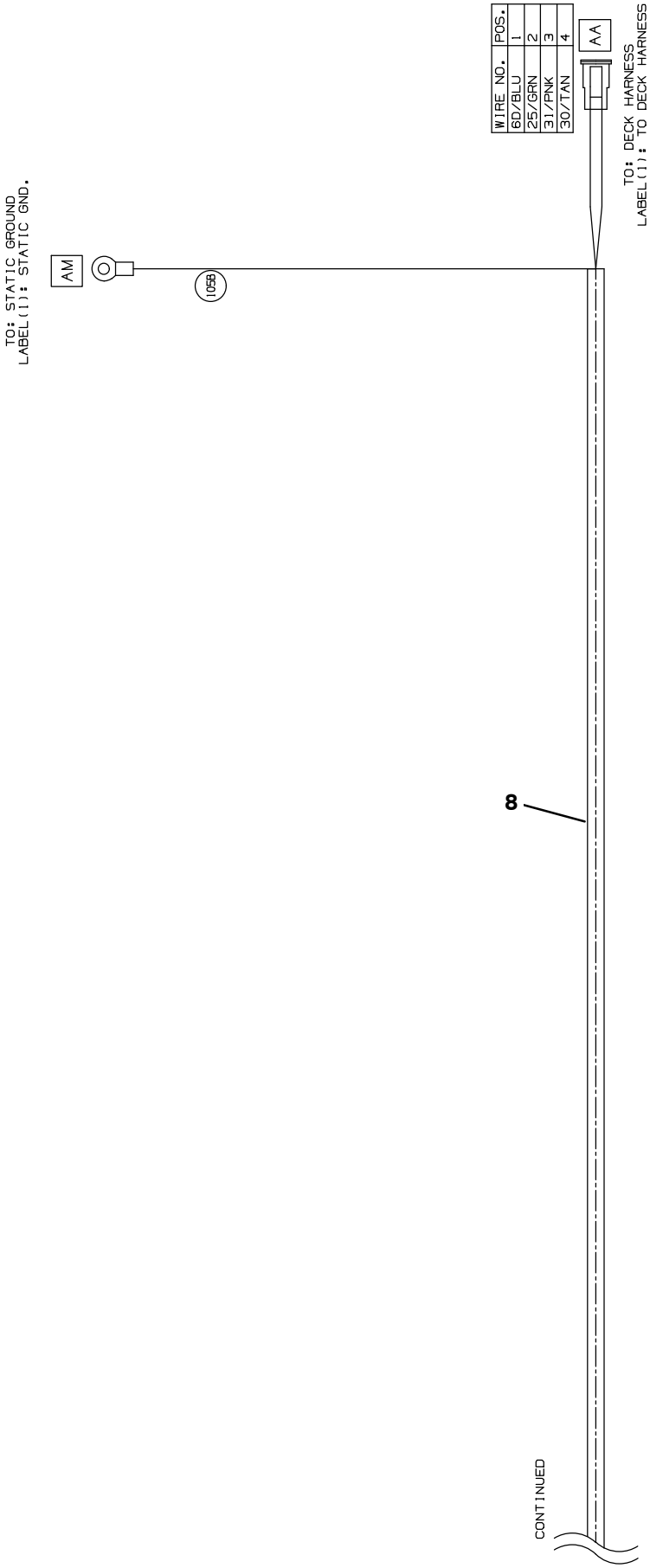

Fig. 28 – Electrical Wire Harnesses Group

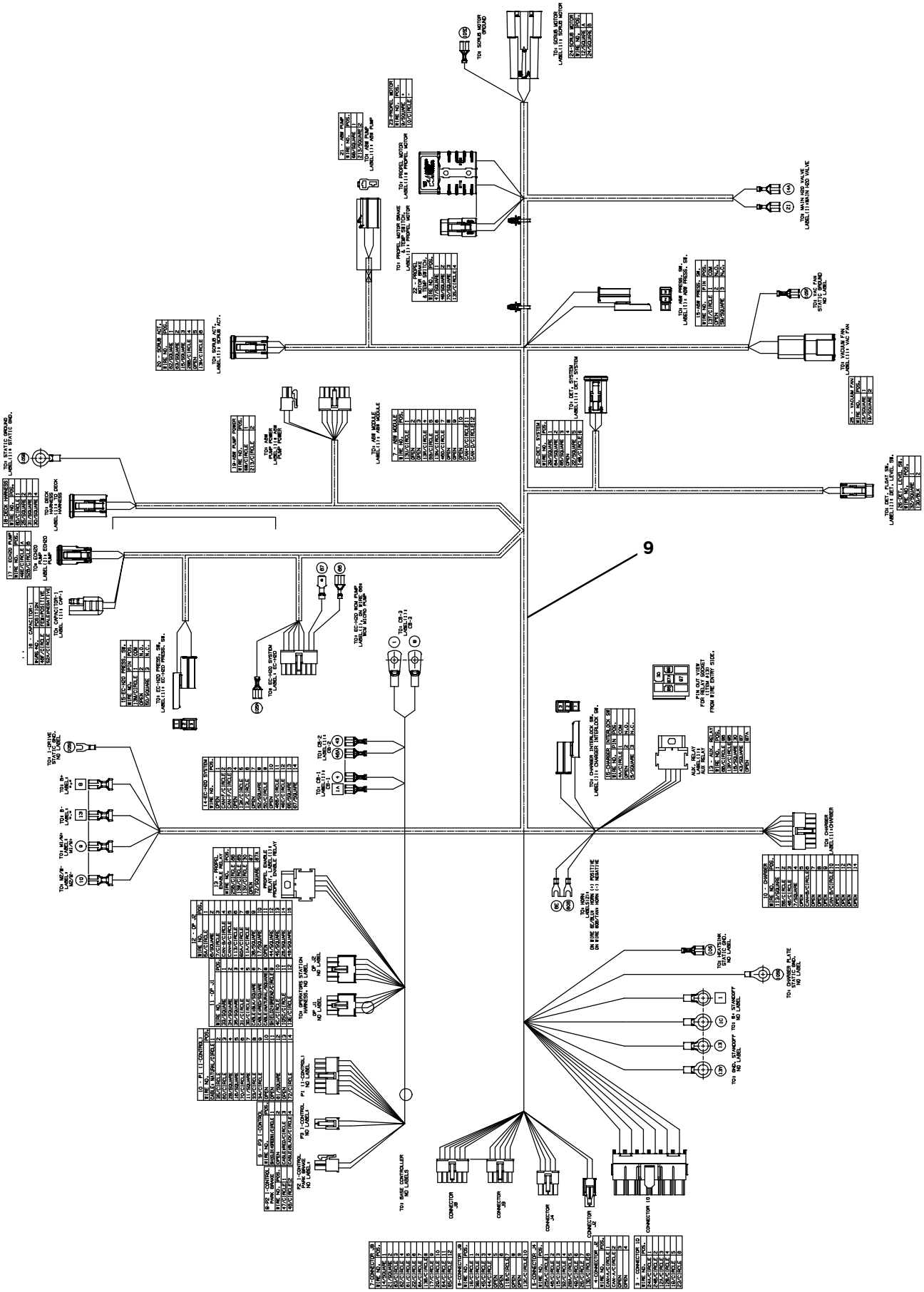

Fig. 28 – Electrical Wire Harnesses Group

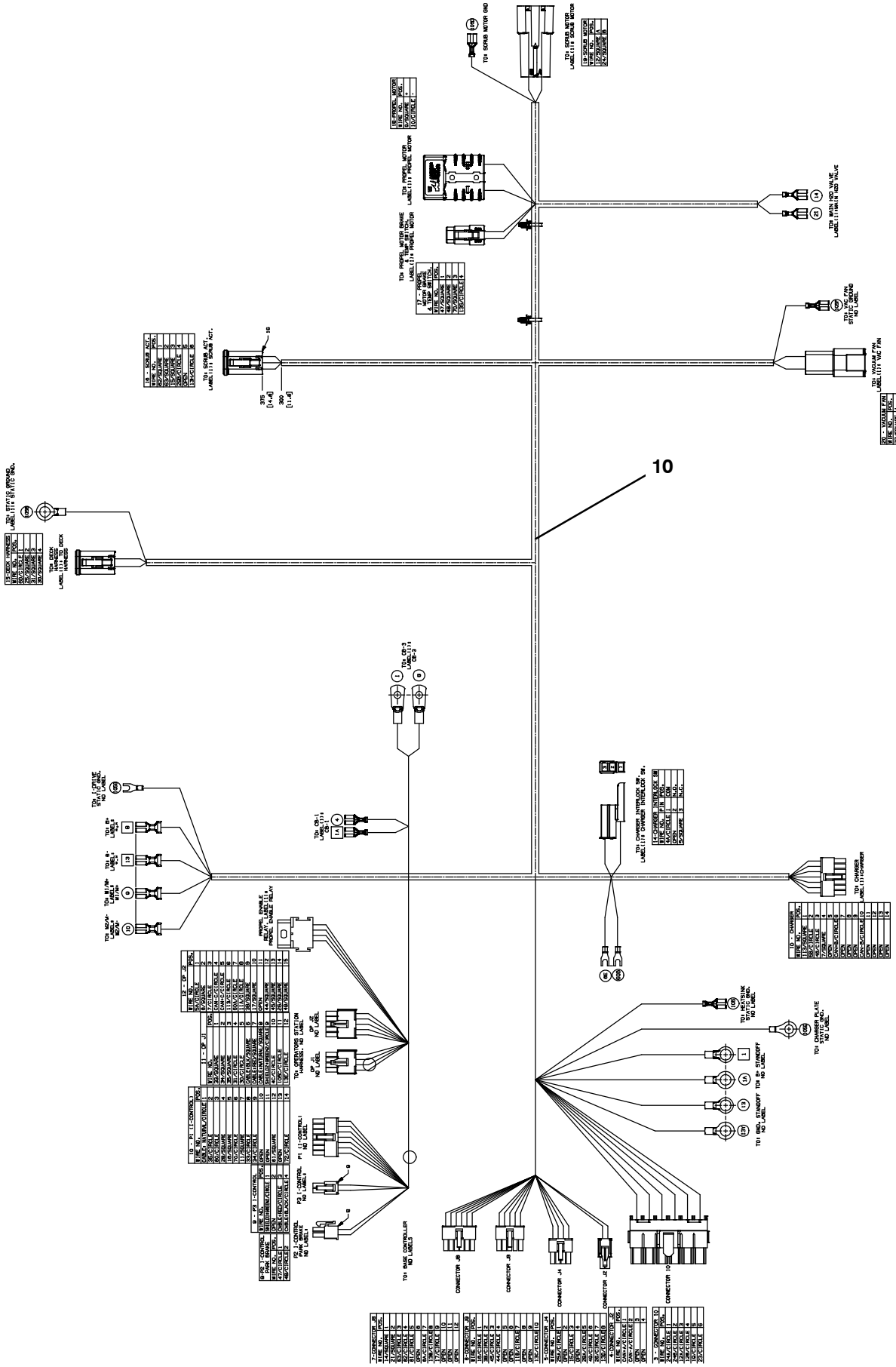

356785

Fig. 28 – Electrical Wire Harnesses Group

Ref.	Part No.	Serial Number	Description	Qty.
1	1076627	(00000000–11003112)	Harness, Main, Ele [T350]	1
2	1076629	(00000000–)	Harness, Ele [Adaptor, ABW]	1
3	1075200	(00000000–11003112)	Harness, Ele [T350, Op. Station]	1
4	1075213	(00000000–)	Harness, Ele [T350, Deck]	1
5	1075573	(00000000–11003112)	Harness, Main, Ele [No Option, T350]	1
6	1076921	(11003113–11052764)	Harness, Main, Ele [T350]	1
7	1076736	(11003113–)	Harness, Ele [T350, Op. Station]	1
8	1076922	(11003113–11052764)	Harness, Main, Ele [No Option, T350]	1
9	1077000	(11052765–)	Harness, Main, Ele [T350]	1
10	1077055	(11052765–)	Harness, Main, Ele [No Option, T350]	1

Fig. 29 – Label Group (With Text)

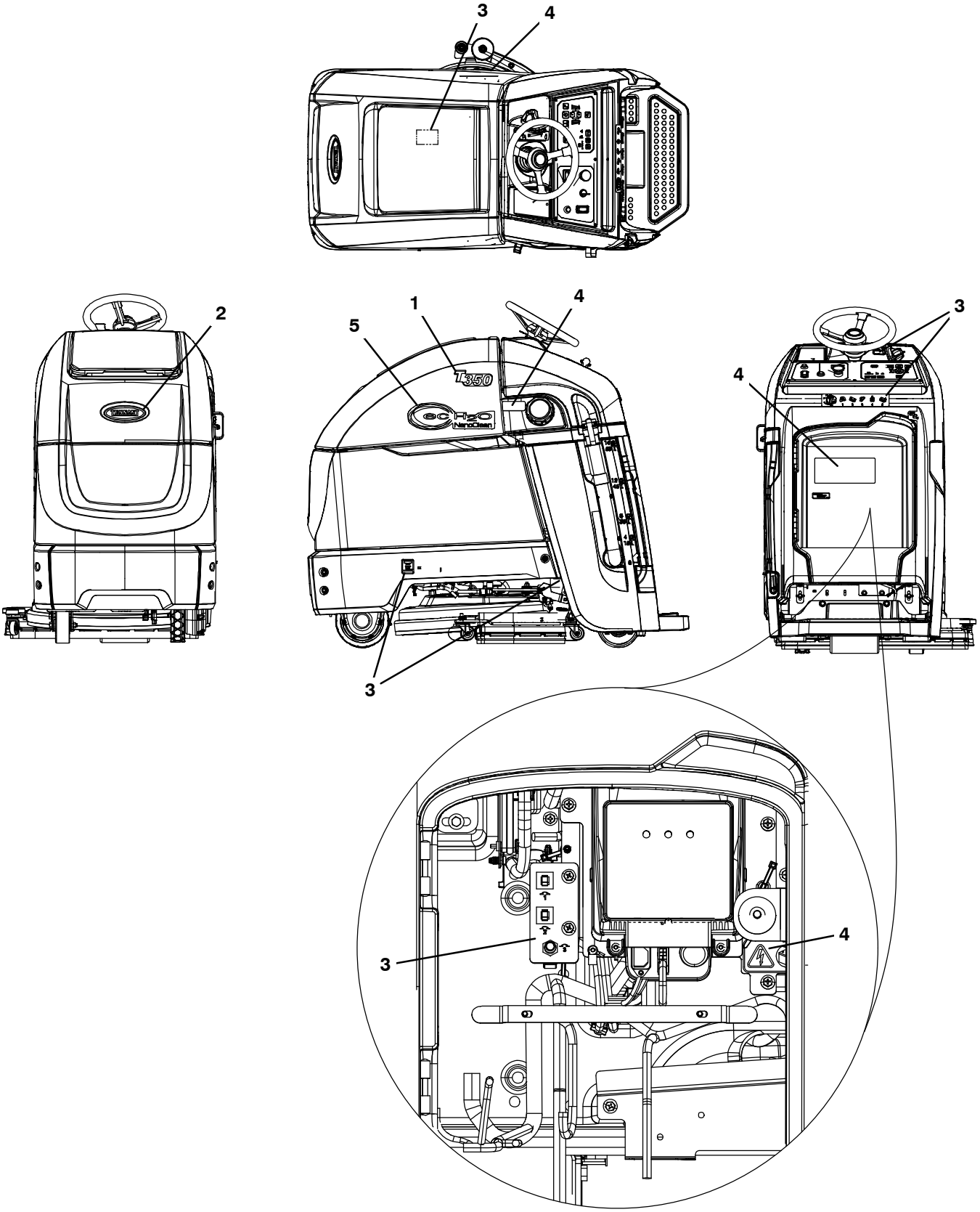

356774

Fig. 29 – Label Group (With Text)

Ref.	Part No.	Serial Number	Description	Qty.
1	1233076	(00000000–)	Label, T350	2
2	1213114	(00000000–)	Label, Logo, 05.5l, Blk/Sil [Tennant]	1
3	1233347	(00000000–)	Label Sheet, Operational [T350]	1
4	1220962	(00000000–)	Label Sheet, Info/Hzrd [T500, Na] (En/Fr/ Es Text)	1
5	1216520	(00000000–)	Label, Logo [ecH20 Nano]	2

Fig. 30 – Label Group (Textless Labels)

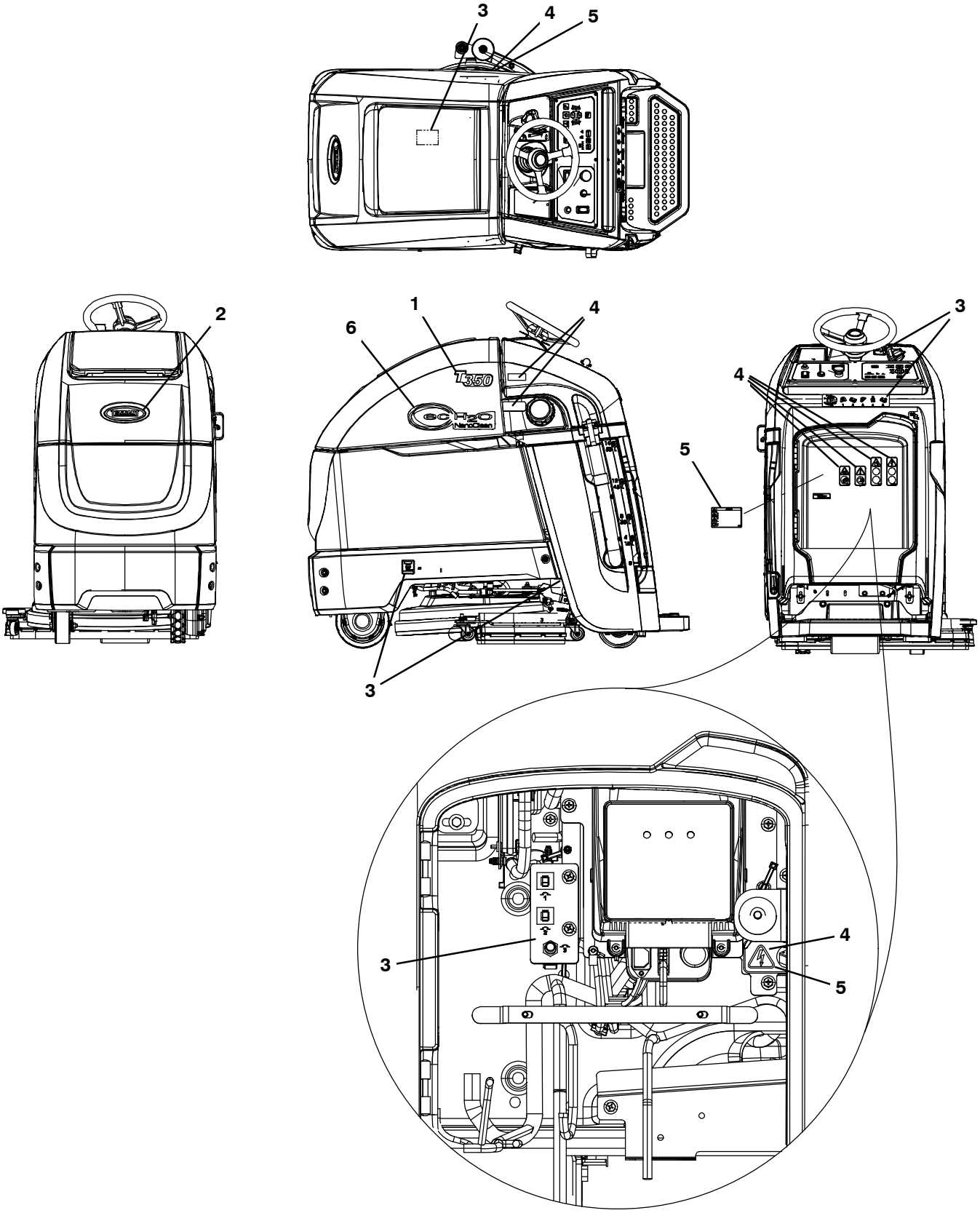

356754

Fig. 30 - Label Group (Textless Labels)

Ref.	Part No.	Serial Number	Description	Qty.
1	1233076	(00000000–)	Label, T350	2
2	1213114	(00000000–)	Label, Logo, 05.5l, Blk/Sil [Tennant]	1
3	1233347	(00000000–)	Label Sheet, Operational [T350]	1
4	1220963	(00000000–)	Label Sheet, Info/Hzrd [T500, Ce] (Textless)	1
5	1220966	(00000000–)	Label Sheet, Info/Hzrd [T500, Jp] (Japanese Text)	1
6	1216520	(00000000–)	Label, Logo [ecH20 Nano]	2

SECTION 3

Contents **Page**

Fig. 1 – ec–H20 Solution Pump Group 3-2
Fig. 2 – ec–H20 Solution Supply Group 3-4
Fig. 3 – ES Detergent Metering / Severe Environment Group 3-6
Fig. 4 – Telemetry Group (S/N 00000000–11013677) 3-8
Fig. 5 – Telemetry Group, Membrane Panel (S/N 11013678 –) 3-10
Fig. 6 – Telemetry Group, Pro–Panel (S/N 11013678 –) 3-12
Fig. 7 – Battery Group, 210AH, C20 3-14
Fig. 8 – Battery Group, 240AH, C20 3-16
Fig. 9 – Battery Group, 210AH, C20 3-18
Fig. 10 – Hydrolinkâ Battery Watering System . . 3-20
Fig. 11 – Smart–Fill Automatic Battery Watering System 3-22
Fig. 12 – Manual Battery Watering System 3-24
Fig. 13 – On–Board Charger Group 3-26
Fig. 14 – Off–Board Charger Group 3-28
Fig. 15 – Documentation Group (Available Online Only) 3-30

Fig. 1 – ec–H20 Solution Pump Group

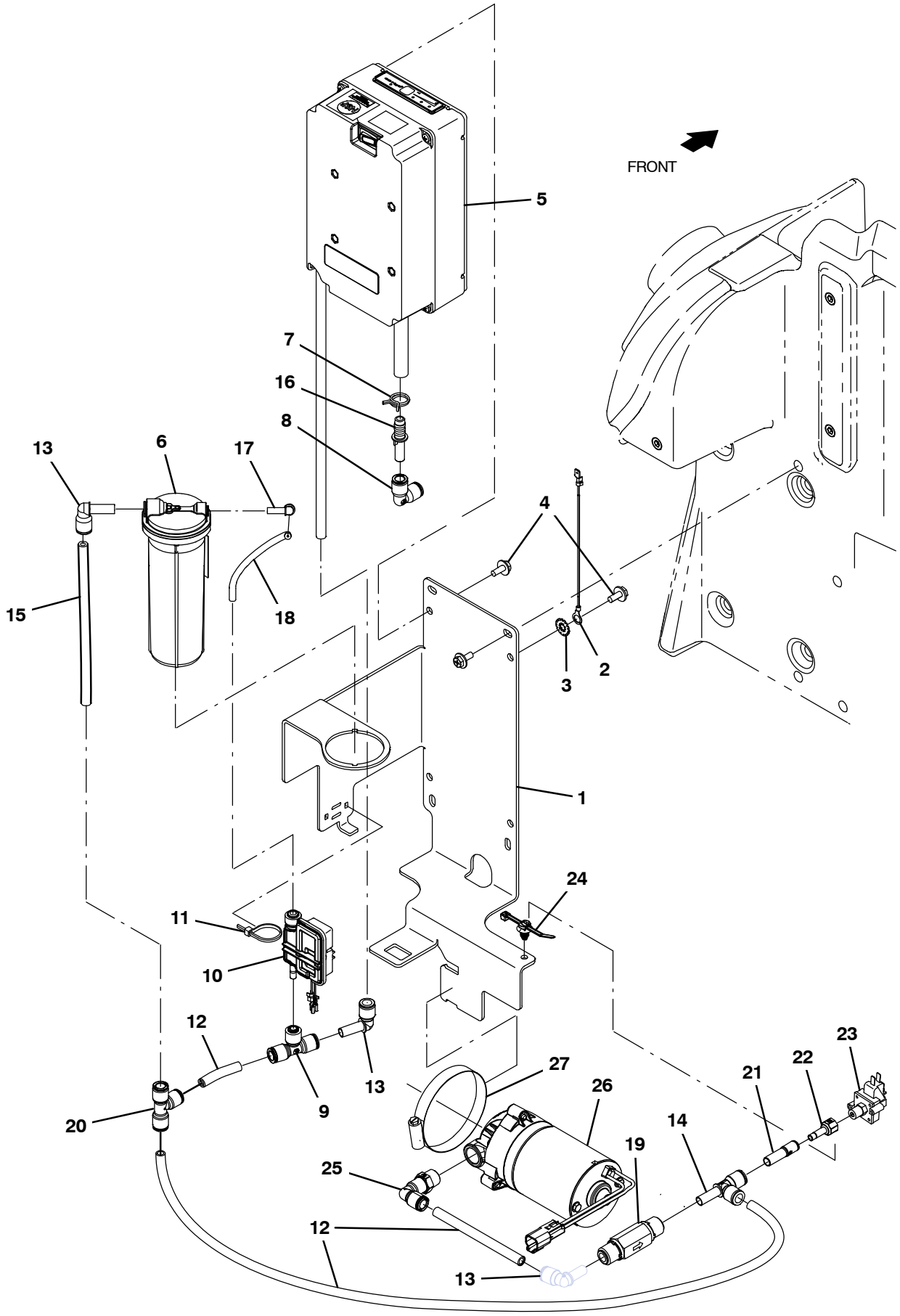

356769

Fig. 1 – ec–H20 Solution Pump Group

	Ref.	Part No.	Serial Number	Description	Qty.
	1	1231135	(00000000–)	Plate, Mtg, Ech2o	1
	2	1074344	(00000000–)	Harness, Ele [Ring With .250m Tail]	1
	3	41140	(00000000–)	Washer, Lock, Int–Ext, 0.25	1
	4	1034731	(00000000–)	Screw, Hex, M6 X 1.00 X 16, Sems, Ss	8
∇	5	9011810*	(00000000–11026321)	Module Kit, Replmt [Ec–H2o, B 02] (See Breakdowns) (Replaced by 9021553)	1
▲	6	9013646	(00000000–11026321)	Cartridge, Ec–H2o Nanoclean Wcm, 270ml	1
∇	5	9021553*	(11026322–)	Module Kit, Replmt [Ec–H2o, B 02] (See Breakdowns]	1
▲	6	9013646	(11026322–)	Cartridge, Ec–H2o Nanoclean Wcm, 270ml	1
	7	607775	(00000000–)	Clamp, Hose, Wir, .63 – .66, Blk	1
	8	1212856	(00000000–)	Fitting, Plstc, E90, Qf06/Qf06	1
	9	1212855	(00000000–)	Fitting, Plstc, Tee, Qf04/Qf06/Qf06	1
	10	1216973	(00000000–)	Pump Assy, Dispenser	1
	11	130773	(00000000–)	Tie, Cable, Nyl, 11.0l, .14w, 3.0 Max. D	1
	12	9014148	(00000000–)	Hose, Afmkt, Nat, 0.25id 0.375od, 06ft	1
	13	1215186	(00000000–)	Fitting, Plstc, E90, Qf06/Qm06	3
	14	1224323	(00000000–)	Fitting, Plstc, Tee, Qf06/Qf06/Qm06	1
	15	9014212	(00000000–)	Hose, Afmkt, Pvc, Grn 0.06id .38od, 02ft	1
	16	1223948	(00000000–)	Fitting, Plstc, Str, Qm06/Bm06	1
	17	1214339	(00000000–)	Fitting, Plstc, E90, Qfo4/Qm04	1
	18	9014211	(00000000–)	Hose, Afmkt, Pvc, Grn .06id .25od, 02ft	1
	19	1215527	(00000000–)	Valve, Check, 1.0 Psi Qf06/Qf06	1
	20	1212573	(00000000–)	Fitting, Plstc, Tee, Qf06/Qf06/Qf06	1
	21	1212934	(00000000–)	Fitting, Plstc, Str, Qf04/Qm06	1
	22	1231855	(00000000–)	Fitting, Plstc, Str, Qm04/Pf02	1
	23	1044335	(00000000–)	Switch, Press, 6psi, Pm02	1
	24	1210807	(00000000–)	Wire, Tie [W/.25” Fir Tree Clip]	1
	25	1212812	(00000000–)	Fitting, Plstc, E90, Qf06/Pm06, Swivel	1
	26	1210517	(00000000–)	Pump, Soltn, Ele, 24vdc, 35 Psi	1
	27	43555	(00000000–)	Clamp, Hose, Wormdrive, 2.62–3.50d	1

* Requires Tennant *True* service or an authorized Tennant service provider.

∇ Assembly

▲ Included in Assembly

Fig. 2 – ec–H20 Solution Supply Group

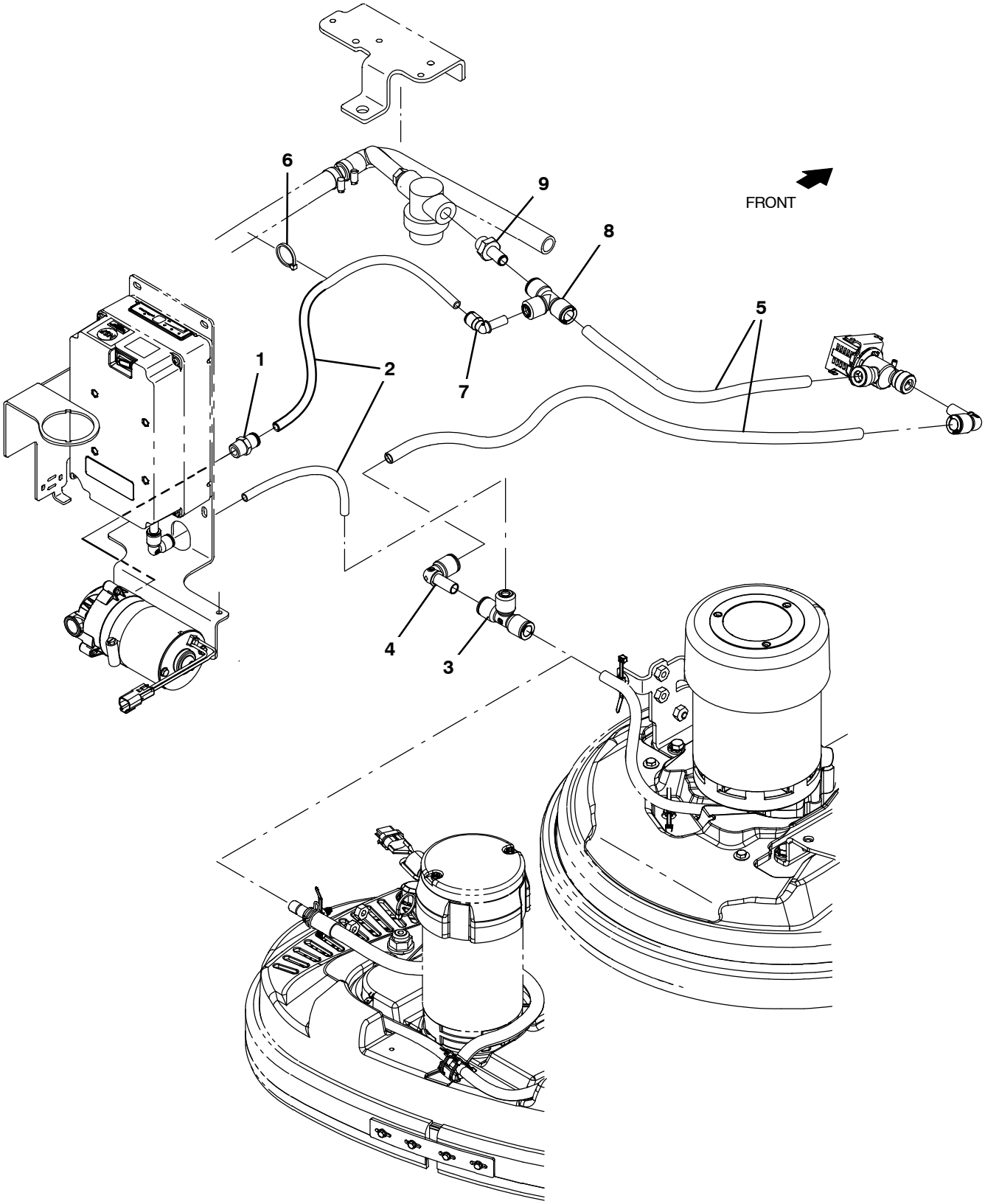

356770

Fig. 2 – ec–H20 Solution Supply Group

Ref.	Part No.	Serial Number	Description	Qty.
1	1231160	(00000000–)	Fitting, Plstc, Str, Qf06/Pm06	1
2	9014148	(00000000–)	Hose, Afmkt, Nat, 0.25Id 0.375Od, 06Ft	1
3	1212875	(00000000–)	Fitting, Plstc, Tee, Qf06/Qf08/Qf08	1
4	1212809	(00000000–)	Fitting, Plstc, E90, Qf08/Qm08	1
5	9014145	(00000000–)	Hose, Afmkt, Pe, .375Id .50Od, 05Ft	1
6	49263	(00000000–)	Tie, Cable, Nyl, 11.4l .19w 3.0 Max D	3
7	1215186	(00000000–)	Fitting, Plstc, E90, Qf06/Qm06	1
8	1212875	(00000000–)	Fitting, Plstc, Tee, Qf06/Qf08/Qf08	1
9	1227552	(00000000–)	Fitting, Plstc, Str, Qm08/Pm06	1

Fig. 3 – ES Detergent Metering / Severe Environment Group

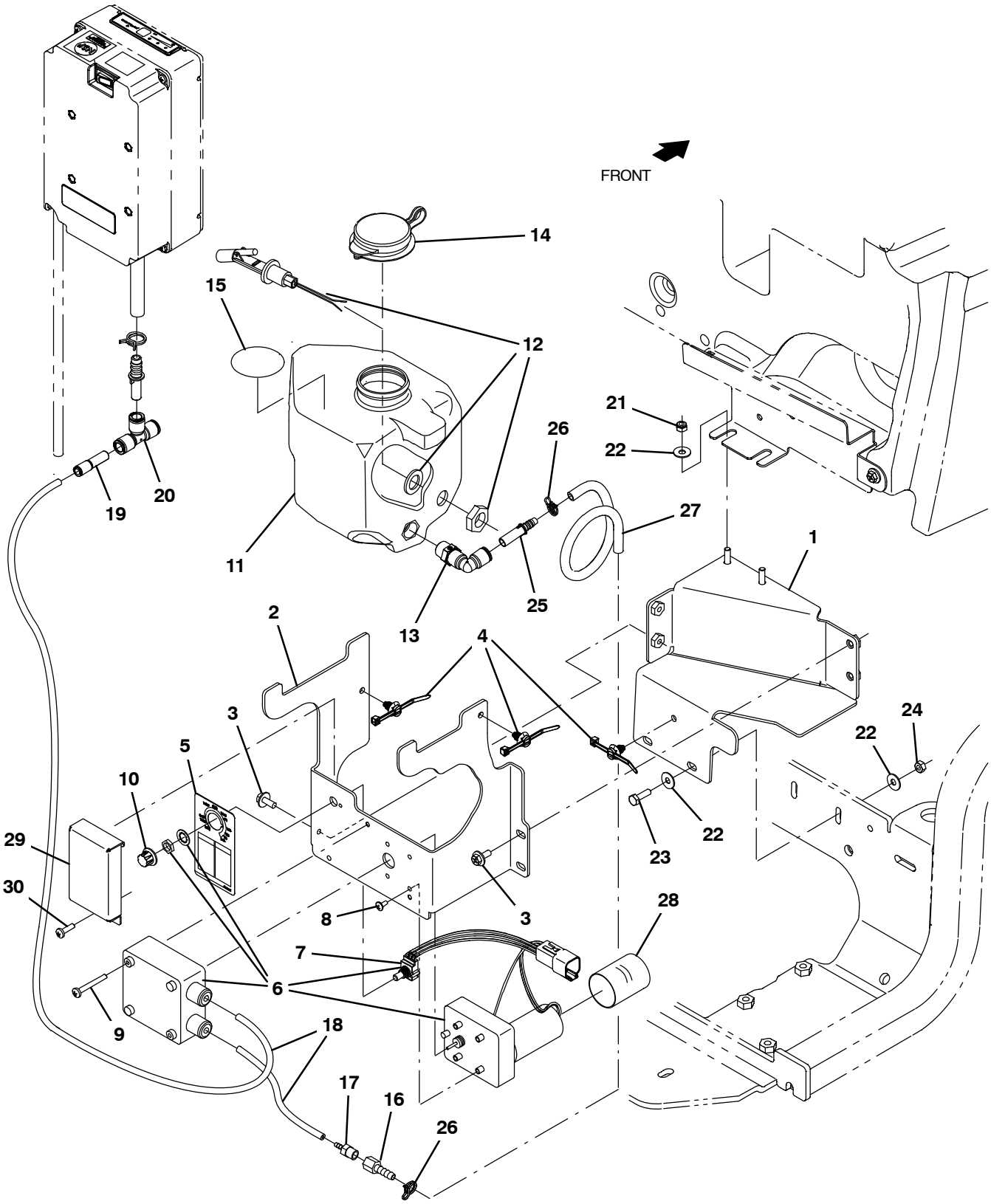

356771

Fig. 3 – ES Detergent Metering / Severe Environment Group

	Ref.	Part No.	Serial Number	Description	Qty.
	1	1230864	(00000000–)	Bracket Wldt, Sevr Env	1
	2	1230470	(00000000–)	Bracket, Sevr Env	1
	3	1034731	(00000000–)	Screw, Hex, M6 X 1.00 X 16, Sems, Ss	4
	4	1210807	(00000000–)	Wire, Tie [W/.25” Fir Tree Clip]	3
	5	1210440	(00000000–)	Label, Opertnl, Detergent Metering	1
∇	6	1215698	(00000000–)	Pump Assy, Detgt, 24 Vdc [T300]	1
▲		1208721	(00000000–)	Pump, Detgt, 24vdc, 120 rpm	1
▲		1219077	(00000000–)	Hose Kit, Detge [0.5cc]	1
▲	7	1211775	(00000000–)	Potentiometer [5k, W/Leads and Conn.]	1
	8	609980	(00000000–)	Screw, Trs, Phl, 08–32 X 0.38, Sems	4
	9	17185	(00000000–)	Screw, Pan, Phl, M5 X 0.80 X 40, Ss	2
	10	630265	(00000000–)	Knob, Rnd, 0.75d 0.50l 0.25b, Plstc	1
	11	1217453	(00000000–)	Tank [2.5 Liter]	1
	12	1212430	(00000000–)	Sensor, Level, Liq, 30watt, Spst	1
	13	1212812	(00000000–)	Fitting, Plstc, E90, Qf06/Pm06, Swivel	1
	14	1057372	(00000000–)	Cap, Snap, 2.17d	1
	15	1224989	(00000000–)	Label, Detergent Metering Tank	1
	16	150520	(00000000–)	Fitting, Brs, Str, Bm04/Pf02	1
	17	150524	(00000000–)	Fitting, Brs, Str, Bm02/Pm02	1
	18	1235746	(00000000–)	Hose, Afmkt, Pvc, Clr 0.12Id 03Ft	1
	19	1212934	(00000000–)	Fitting, Plstc, Str, Qf04/Qm06	1
	20	1212573	(00000000–)	Fitting, Plstc, Tee, Qf06/Qf06/Qf06	1
	21	08712	(00000000–)	Nut, Hex, Lock, M6 X 1.00, Nl, Ss	2
	22	01684	(00000000–)	Washer, Flat, 0.27b 0.69d .05, Ss	6
	23	12277	(00000000–)	Screw, Hex, M6 X 1.00 X 20, Nl, Ss	2
	24	07785	(00000000–)	Nut, Hex, Std, M6 X 1.00, Ss	2
	25	1212857	(00000000–)	Fitting, Plstc, Str, Qm06/Bm04	1
	26	613735	(00000000–)	Clamp, hose, Wir, .40– .42, Yel	2
	27	1014986	(00000000–)	Hose, Afmkt, Pvc, Clr, 0.25id, 02ft	1
	28	605064	(00000000–)	Cap, Vinyl, 1.38 D 1.6L	1
∇		9017884	(00000000–)	Lockout Kit, Severe Environment, CI	1
▲	29	1239732	(00000000–)	Cover, Knob, Severe Environment	1
▲	30	140350	(00000000–)	Screw, Pan, Phl, 10–16 X 0.50, Ss[Typ25]	1

∇ Assembly

▲ Included in Assembly

Fig. 4 – Telemetry Group (S/N 00000000–11013677)

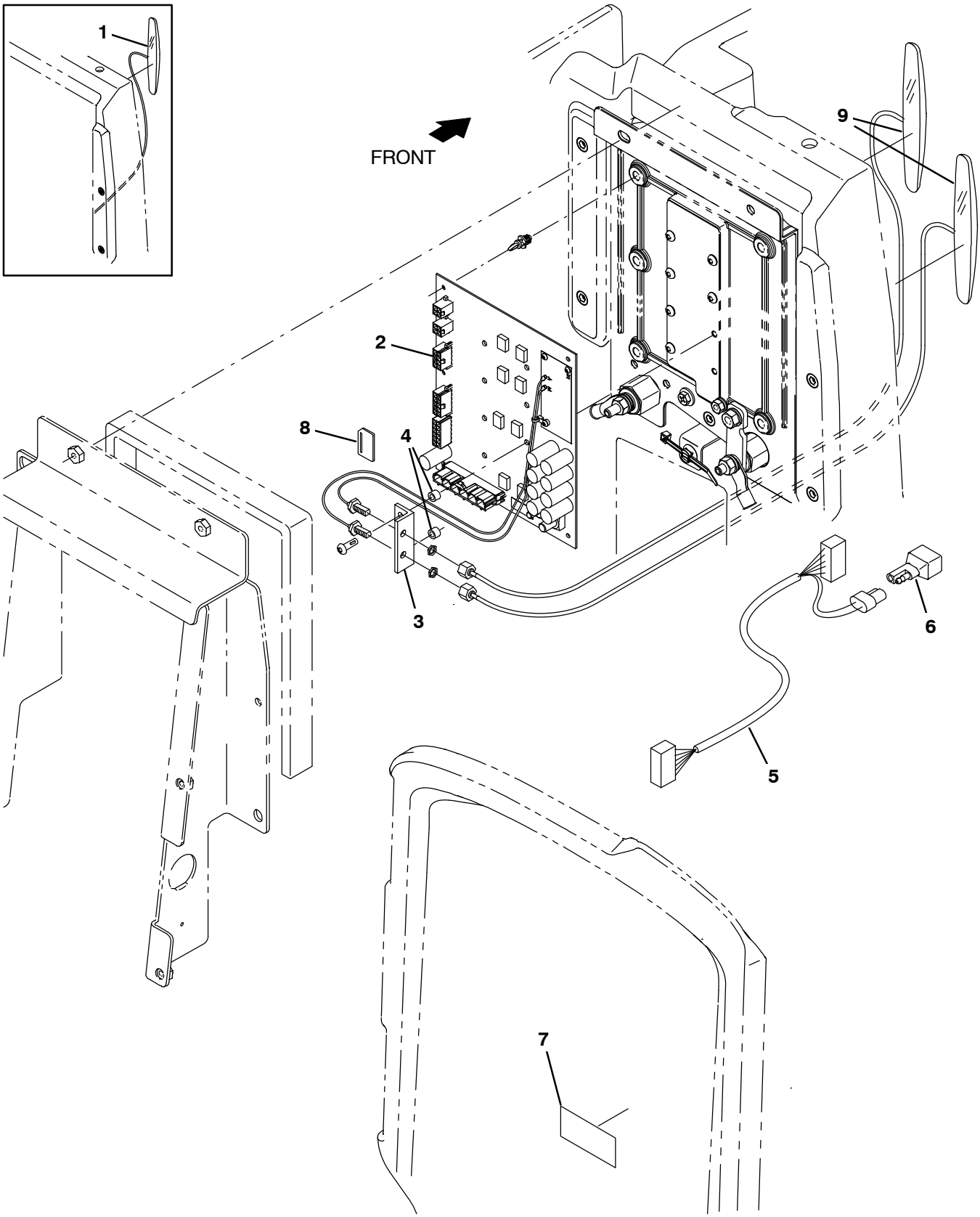

356772

Fig. 4 – Telemetry Group (S/N 00000000–11013677)

Ref.	Part No.	Serial Number	Description	Qty.
1	315724	(00000000–10974102)	Antenna, Telem, 18.0 In [Gprs]	1
2	9021347*	(00000000–11013677)	Board Kit, Scb, Membrane, Telem, Ci	1
2	9021350*	(00000000–11013677)	Board Kit, Scb, Pro–Panel, Telem, Ci	1
3	1227812	(00000000–11013677)	Bracket, Sma Connector	1
4	1227815	(00000000–11013677)	Spacer, Unthreaded, Aluminium	2
5	1075195	(00000000–11013677)	Harness, Ele, Adaptor [T300, Amii]	1
6	222290	(00000000–11013677)	Diode, Ele, Plug	1
7	1069580	(00000000–11013677)	Label, Mach, Telem [Usa, Intl]	1
8	9040082	(00000000–11013677)	Telem Kit, Ci [Sim, US]	1
8	9040083	(00000000–11013677)	Telem Kit, Ci [Sim, Intl]	1
9	1247569	(10974103–11013677)	Antenna, Telem [4g, 36”]	2

***** Requires Tennant *True* service or an authorized Tennant service provider.

Fig. 5 – Telemetry Group, Membrane Panel (S/N 11013678 –)

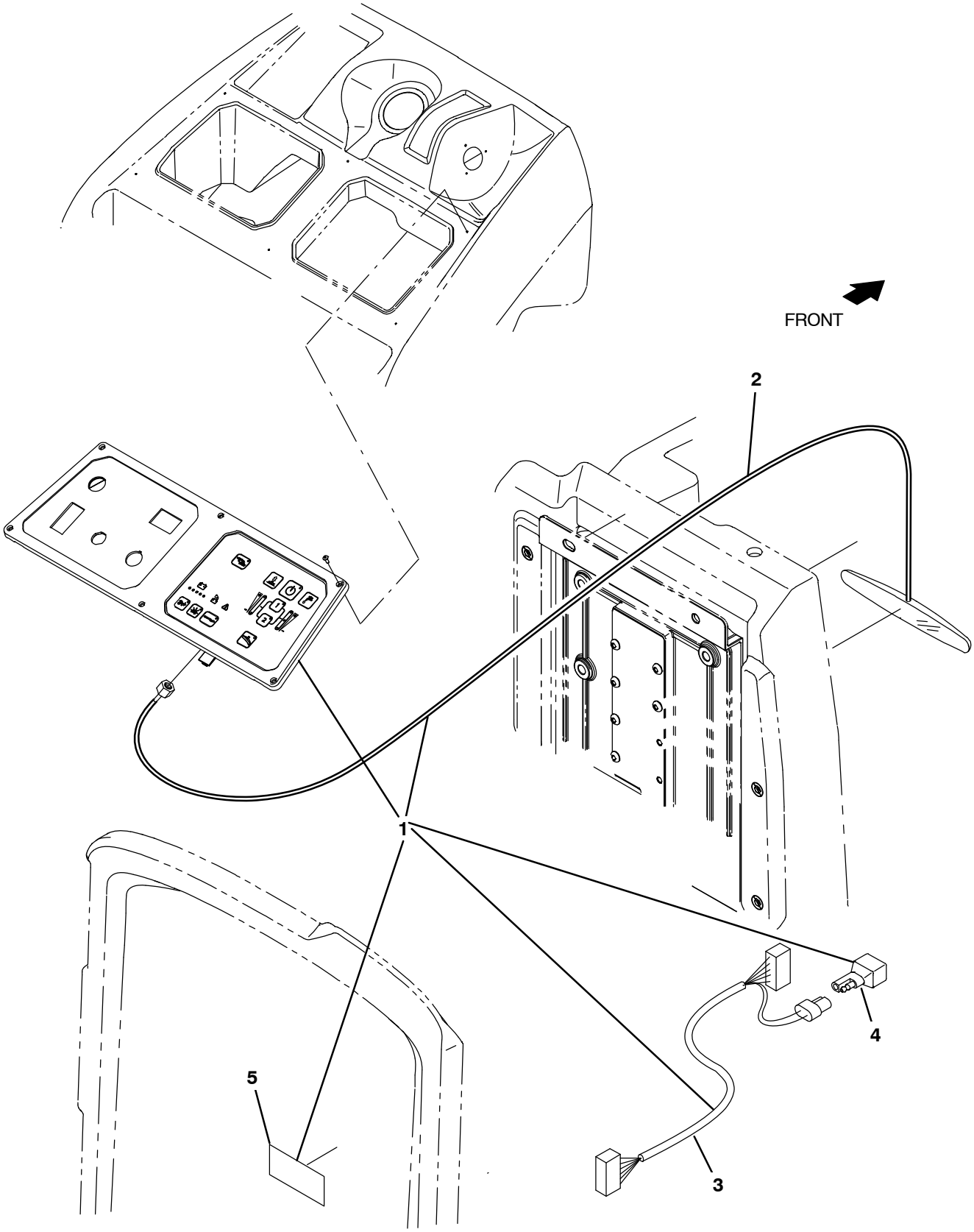

357144

Fig. 5 – Telemetry Group, Membrane Panel (S/N 11013678 –)

	Ref.	Part No.	Serial Number	Description	Qty.
▽	1	9021346	(11013678–)	Control Kit, Membrane, Telem, Ci	1
▲	2	1247569	(11013678–)	Antenna, Telem [4g, 36”]	1
▲	3	1075195	(11013678–)	Harness, Ele, Adaptor [T300, Amii]	1
▲	4	222290	(11013678–)	Diode, Ele, Plug	1
▲	5	1252880	(11013678–)	Label, Mach, Telem [BG96]	1

Fig. 6 – Telemetry Group, Pro–Panel (S/N 11013678 –)

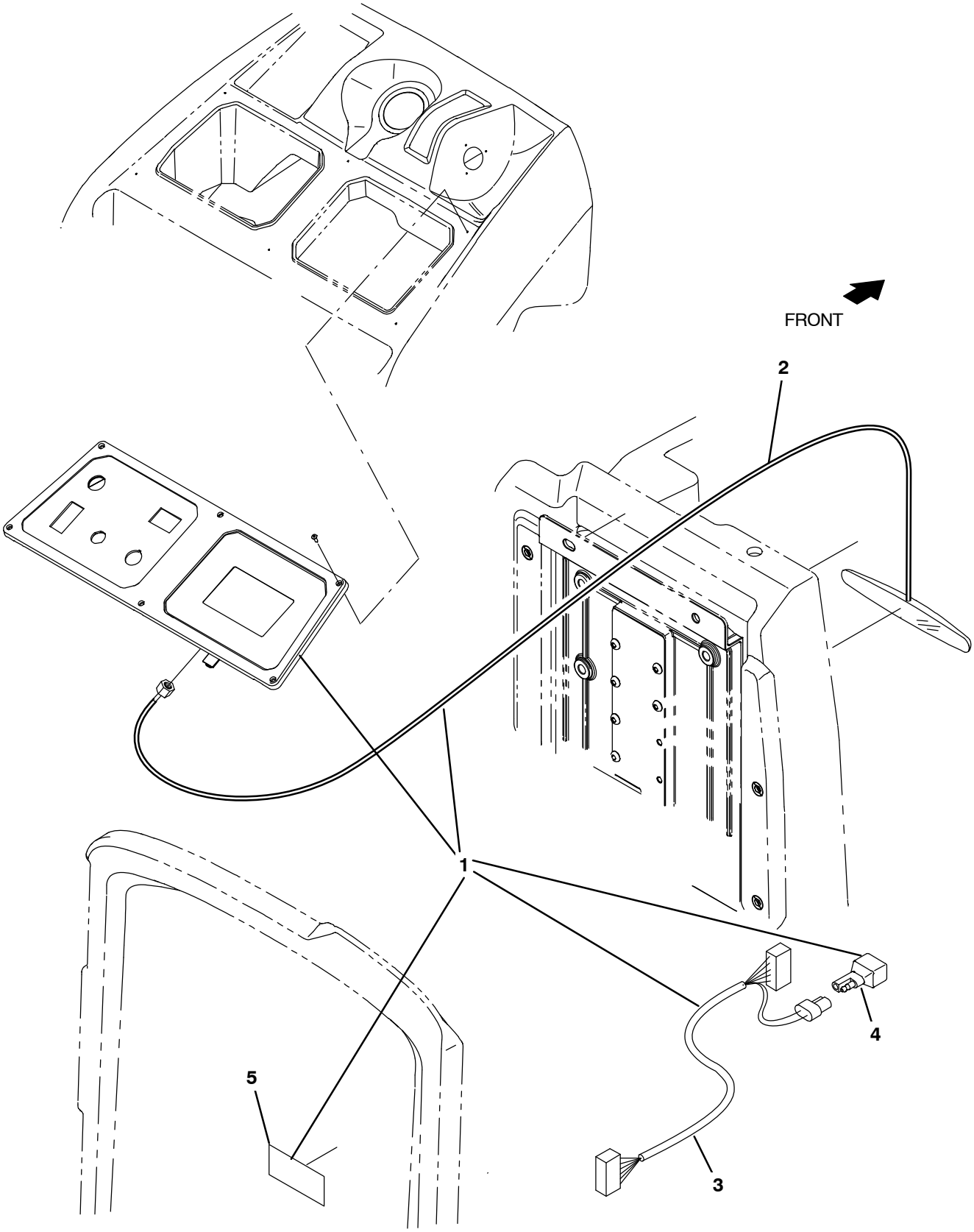

357145

Fig. 6 – Telemetry Group, Pro–Panel (S/N 11013678 –)

	Ref.	Part No.	Serial Number	Description	Qty.
▽	1	9021349	(11013678–)	Control Kit, Pro–Panl, Telem, Ci	1
▲	2	1247569	(11013678–)	Antenna, Telem [4g, 36”]	1
▲	3	1075195	(11013678–)	Harness, Ele, Adaptor [T300, Amii]	1
▲	4	222290	(11013678–)	Diode, Ele, Plug	1
▲	5	1252880	(11013678–)	Label, Mach, Telem [BG96]	1

* Requires Tennant *True* service or an authorized Tennant service provider.

Fig. 7 – Battery Group, 210AH, C20

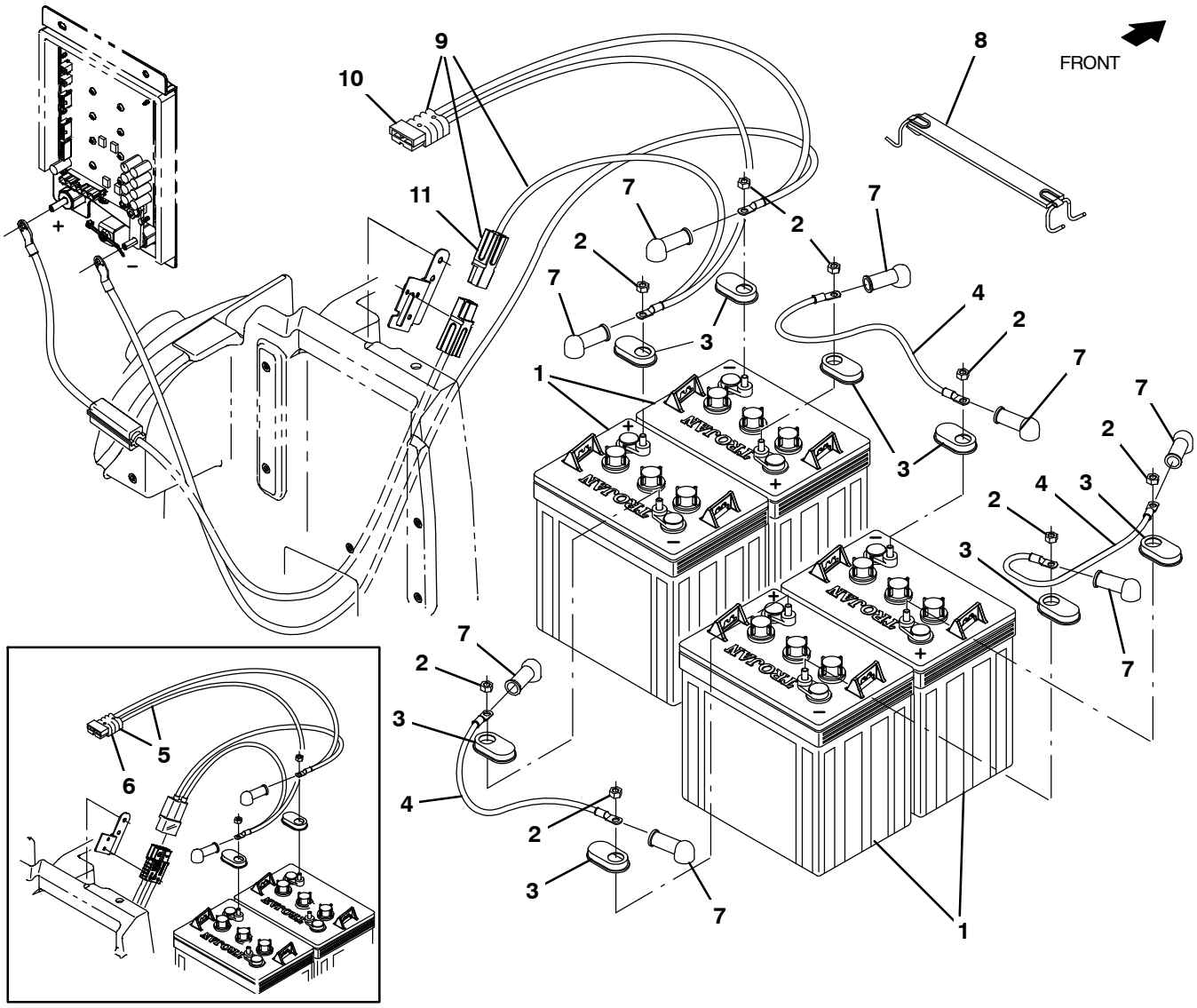

356757

Fig. 7 – Battery Group, 210AH, C20

	Ref.	Part No.	Serial Number	Description	Qty.
	1	1227180	(00000000–)	Battery, Wet, 6vdc, 210ah, C/20, W/Ca	4
	2	87435	(00000000–)	Nut, Hex, Flexlock, .31–18	8
	3	1041030	(00000000–)	Cap, Battery, Black [For 155ah]	8
	4	1073680	(00000000–)	Cable, 04ga 15.0l Blk [M8 Ring/M8 Ring]	3
▽	5	1075576	(00000000–10897476)	Cable, Battery, 4ga [M8 Ring/M8 Ring] (Replaced by 9018173)	1
▲	6	605387	(00000000–10897476)	Connector, Anderson, 050A, Red [W/o Con]	1
	7	611221	(00000000–)	Boot, Terminal, Battery, 25.4mm, Blk	8
	8	1232290	(00000000–)	Strap, Lift, Battery [Trojan]	1
▽	9	1076391	(10897477–)	Cable, Battery, 4Ga [M8 RingM8 Ring]	1
▲	10	605387	(10897477–)	Connector, Anderson, 050A, Red [W/o Con]	1
▲	11	1020446	(10897477–)	Connector, Anderson, 1321 Series	1

▽ Assembly

▲ Included in Assembly

Fig. 8 – Battery Group, 240AH, C20

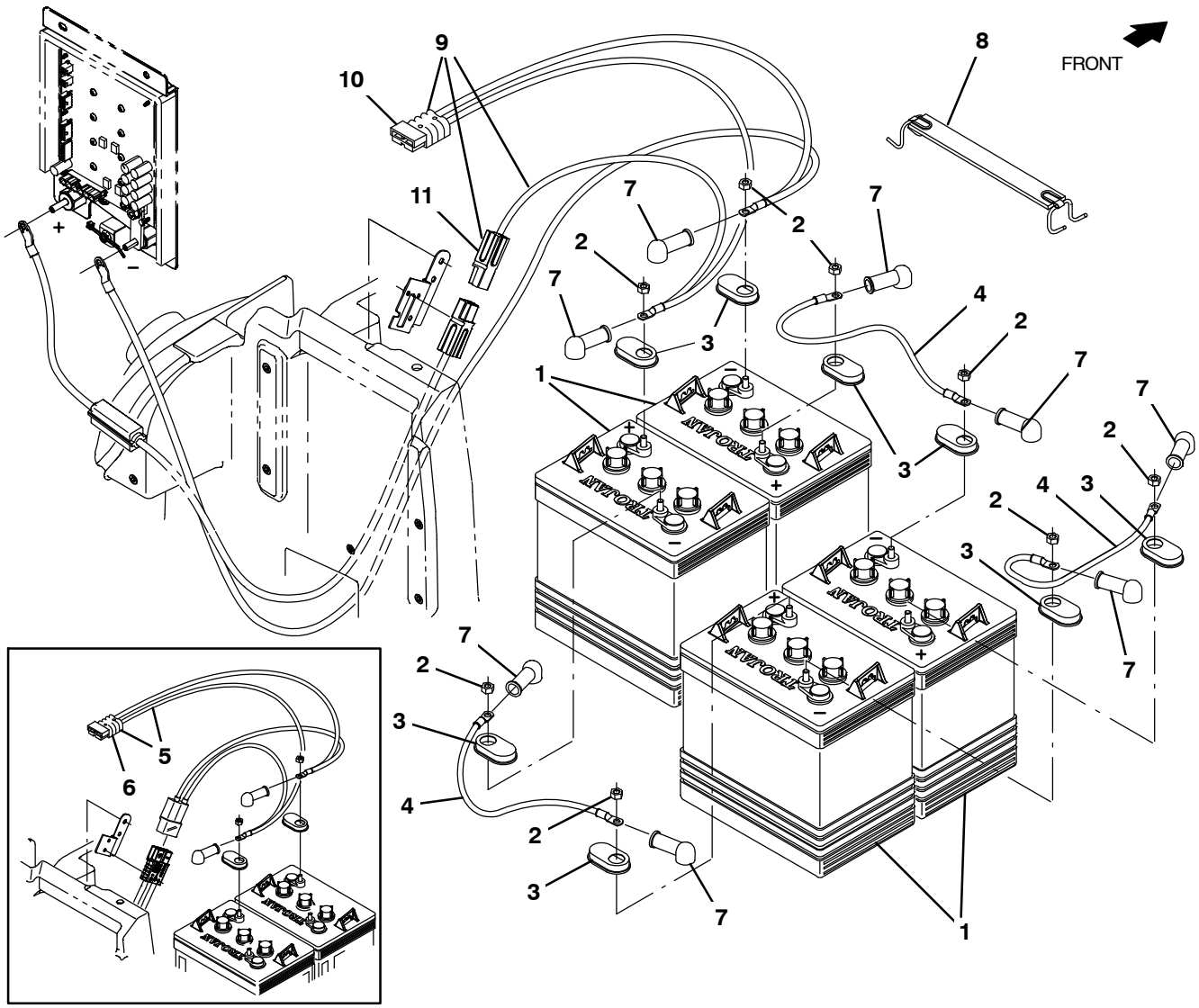

356756

Fig. 8 – Battery Group, 240AH, C20

	Ref.	Part No.	Serial Number	Description	Qty.
	1	222280	(00000000–)	Battery, Wet, 06vdc 0240ah	4
	2	87435	(00000000–)	Nut, Hex, Flexlock, .31–18	8
	3	1041030	(00000000–)	Cap, Battery, Black [For 155ah]	8
	4	1073680	(00000000–)	Cable, 04ga 15.0l Blk [M8 Ring/M8 Ring]	3
▽	5	1075576	(00000000–10897476)	Cable, Battery, 4ga [M8 Ring/M8 Ring] (Replaced by 9018173)	1
▲	6	605387	(00000000–10897476)	Connector, Anderson, 050A, Red [W/o Con]	1
	7	611221	(00000000–)	Boot, Terminal, Battery, 25.4mm, Blk	8
	8	1232290	(00000000–)	Strap, Lift, Battery [Trojan]	1
▽	9	1076391	(10897477–)	Cable, Battery, 4Ga [M8 RingM8 Ring]	1
▲	10	605387	(10897477–)	Connector, Anderson, 050A, Red [W/o Con]	1
▲	11	1020446	(10897477–)	Connector, Anderson, 1321 Series	1

▽ Assembly

▲ Included in Assembly

Fig. 9 – Battery Group, 210AH, C20

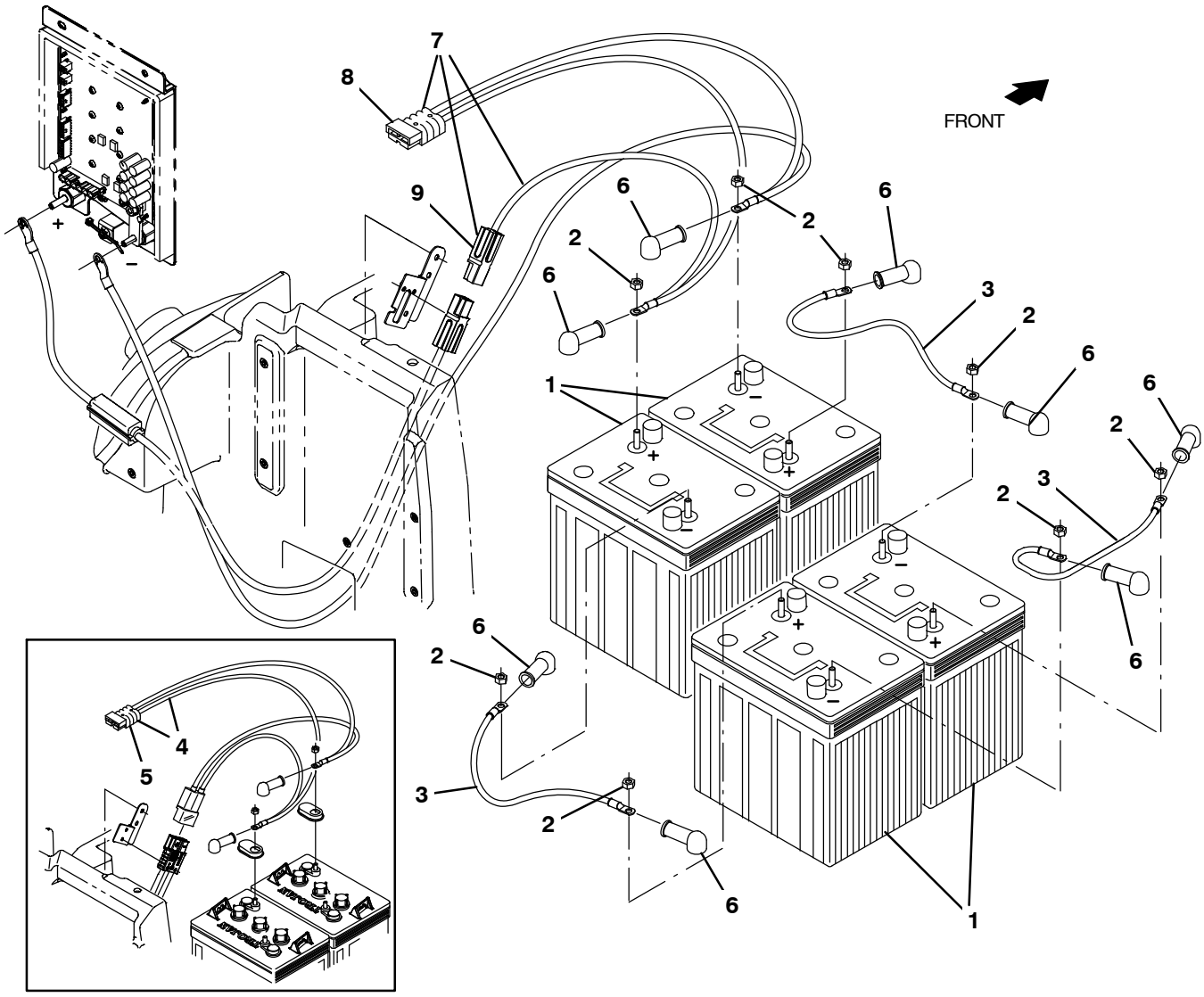

356758

Fig. 9 – Battery Group, 210AH, C20

	Ref.	Part No.	Serial Number	Description	Qty.
	1	1262245	(00000000–)	Battery, Agm, 06vdc 0210ah	4
	2	87435	(00000000–)	Nut, Hex, Flexlock, .31–18	8
	3	1073680	(00000000–)	Cable, 04ga 15.0l Blk [M8 Ring/M8 Ring]	3
∇	4	1075576	(00000000–10897476)	Cable, Battery, 4ga [M8 Ring/M8 Ring] (Replaced by 9018173)	1
▲	5	605387	(00000000–10897476)	Connector, Anderson, 050A, Red [W/o Con]	1
	6	611221	(00000000–)	Boot, Terminal, Battery, 25.4mm, Blk	8
∇	7	1076391	(10897477–)	Cable, Battery, 4Ga [M8 RingM8 Ring]	1
▲	8	605387	(10897477–)	Connector, Anderson, 050A, Red [W/o Con]	1
▲	9	1020446	(10897477–)	Connector, Anderson, 1321 Series	1

∇ Assembly

▲ Included in Assembly

Fig. 10 – Hydrolink® Battery Watering System

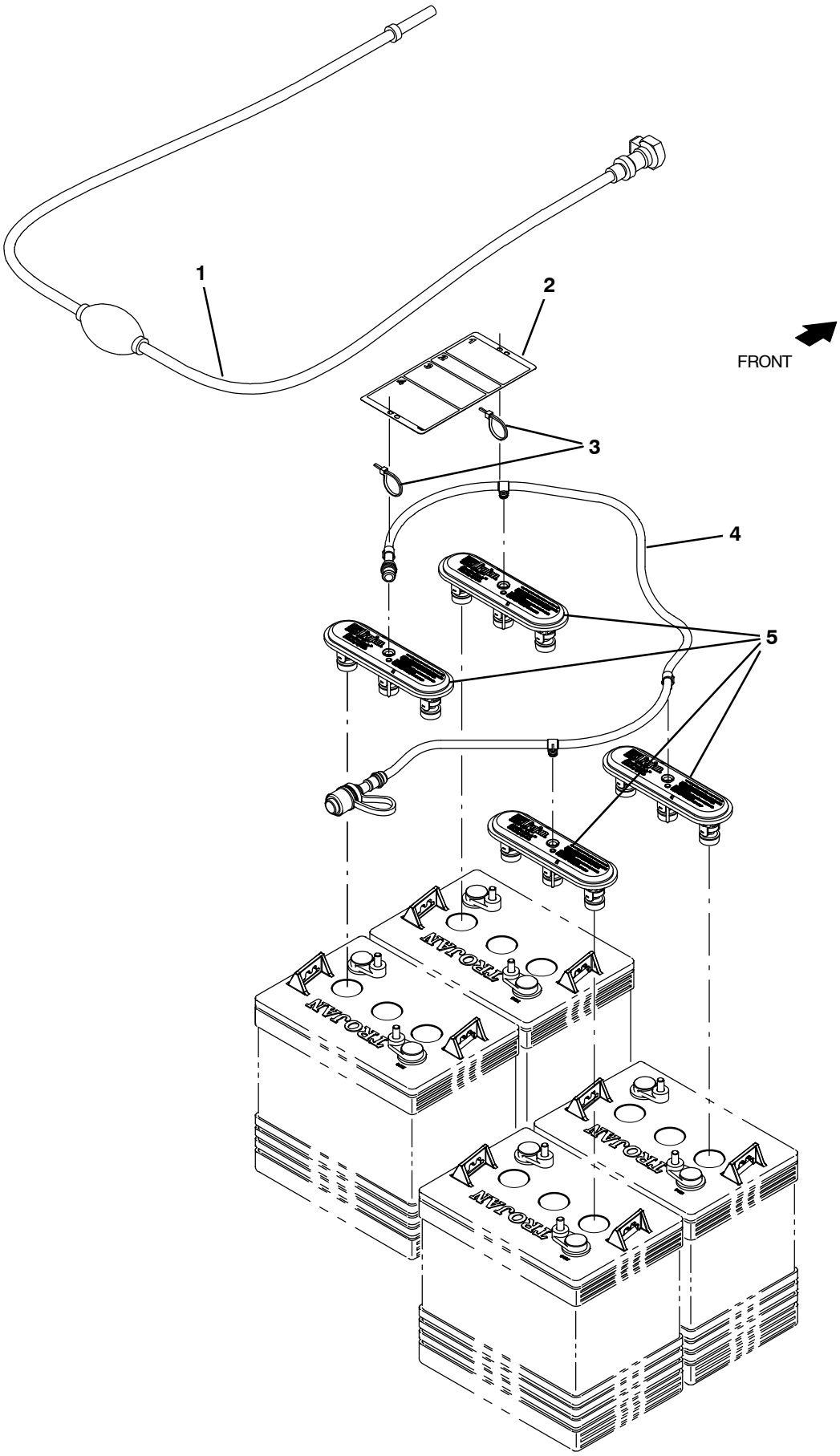

356759

Fig. 10 – Hydrolink® Battery Watering System

	Ref.	Part No.	Serial Number	Description	Qty.
∇		9016768	(00000000–)	Pump Kit, Bat, 24Vdc, Ci [Man, Trojan]	1
▲	1	1058939	(00000000–)	Pump Kit, Fill, Hand, Battery	1
▲	2	1071084	(00000000–)	Label, Tag, Battery [Hydrolink Watering]	1
▲	3	130773	(00000000–)	Tie, Cable, Nyl, 11.0l, .14w, 3.0 Max. D	2
▲	4	1225718	(00000000–)	Tube, Water, Battery, 24vdc [Trojan]	1
▲	5	1204142	(00000000–)	Cap, Vent, Battery [Trojan Hydrolink]	4

∇ Assembly

▲ Included in Assembly

Fig. 11 – Smart–Fill Automatic Battery Watering System

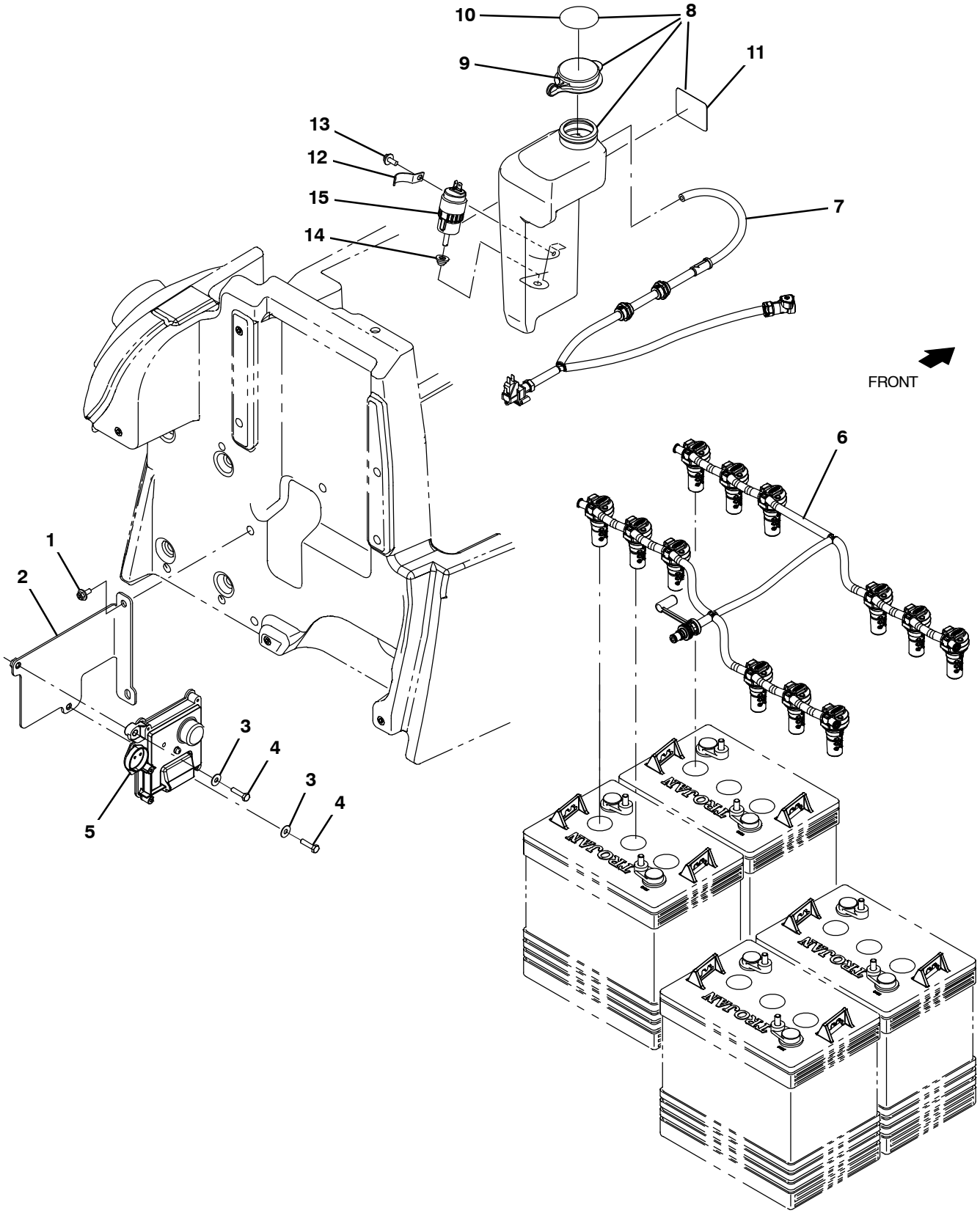

356760

Fig. 11 – Smart–Fill Automatic Battery Watering System

	Ref.	Part No.	Serial Number	Description	Qty.
	1	1034731	(00000000–)	Screw, Hex, M6 X 1.00 X 16, Sems, Ss	2
	2	1226589	(00000000–)	Bracket Wldt, Fill, Auto, Battery	1
	3	01684	(00000000–)	Washer, Flat, 0.27b 0.69d .05, Ss	2
	4	1016005	(00000000–)	Screw, Hex, M6 X 1.00 X 25, Nl, Fl, Ss	2
	5	9016770*	(00000000–)	Controller Kit, Battery, 24Vdc, Ci{Abw]	1
	6	9021081	(00000000–)	Distribution Kit, Water, 4 Btry [Trojan]	1
	7	9018989	(00000000–)	Delivery Kit, Water, Battery	1
∇		9016771	(00000000–)	Tank Kit, Battery Fill, Ci [W/ Pump]	1
▲∇	8	9016772	(00000000–)	Tank Kit, Battery Fill, Ci [W/O Pump]	1
▲▲	9	1224600	(00000000–)	Cap, Snap, 2.17d [Blue]	1
▲▲	10	1224988	(00000000–)	Label, Automated Battery Watering	1
▲▲	11	1233633	(00000000–)	Label, Detgt [Do Not Add]	1
▲	12	1231727	(00000000–)	Strap, Mtg, Pump	1
▲	13	1034731	(00000000–)	Screw, Hex, M6 X 1.00 X 16, Sems, Ss	1
▲	14	1231338	(00000000–)	Grommet, Pump	1
▲	15	1231018	(00000000–)	Pump, In–Tank, 13.5vdc 3.5lpm	1

***** Requires Tennant *True* service or an authorized Tennant service provider.

∇ Assembly

▲ Included in Assembly

Fig. 12 – Manual Battery Watering System

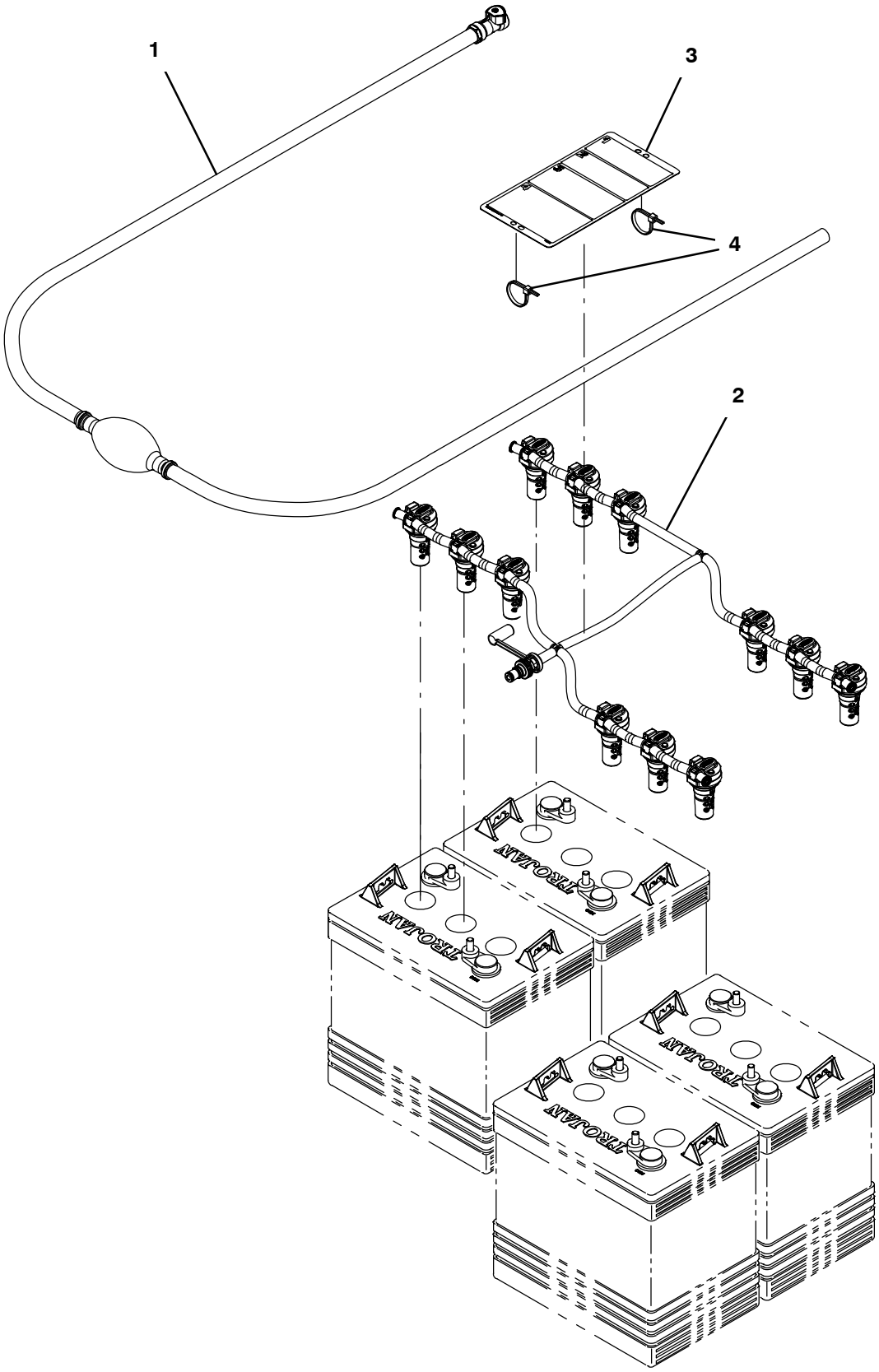

357146

Fig. 12 – Manual Battery Watering System

	Ref.	Part No.	Serial Number	Description	Qty.
▽		9021123	(00000000–)	Fill Kit, Battery, Manual, Ci [Trojan]	1
▲	1	1236295	(00000000–)	Pump, Hand, Battery	1
▲	2	1253640	(00000000–)	Distribution Assy, Water, Battery	1
▲	3	1253250	(00000000–)	Label, Tag, Battery [Bwt Watering]	1
▲	4	130773	(00000000–)	Tie, Cable, Nyl, 11.0l, .14w, 3.0 Max. D	2

Fig. 13 – On–Board Charger Group

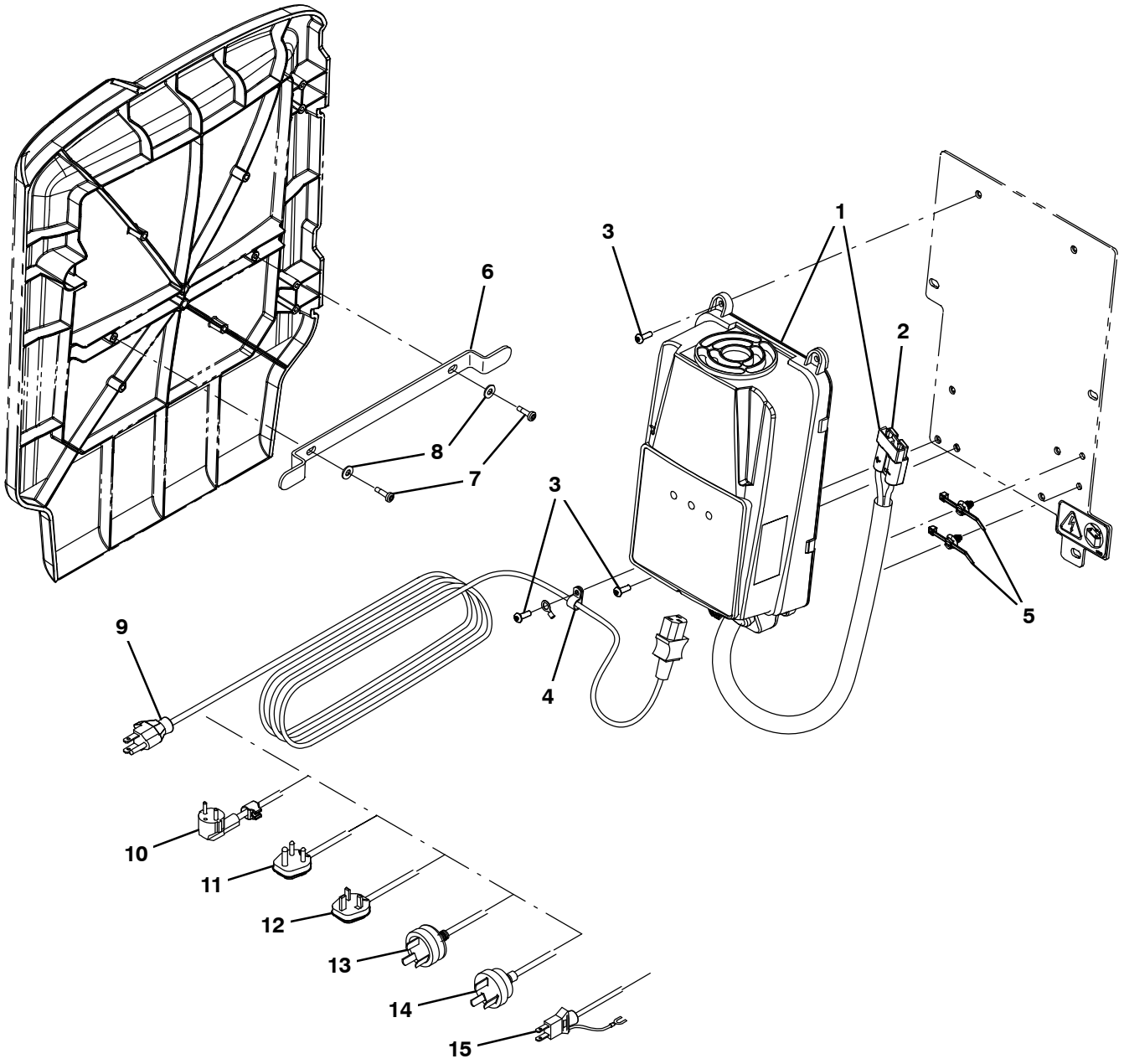

356762

Fig. 13 – On–Board Charger Group

	Ref.	Part No.	Serial Number	Description	Qty.
∇	1	9017891*	(00000000–10897476)	Charger Kit, Charger, Harness	1
▲	2	605387	(00000000–10897476)	Connector, Anderson, 050a, Red [W/O Con]	1
∇	1	1250046*	(10897477–)	Charger, 24vdc 25a 115–240vac [On–Board]	1
▲	2	605387	(10897477–)	Connector, Anderson, 050a, Red [W/O Con]	1
	3	1205799	(00000000–)	Screw, Btn, M5 X 0.8 X 16, 8.8, Nl, Torx	5
	4	26395–2	(00000000–)	Clamp, Cable, Stl, 0.38d X 0.38w, 1hole	1
	5	1210807	(00000000–)	Wire, Tie [W/.25” Fir Tree Clip]	2
	6	1049610	(00000000–)	Hook, Cord	1
	7	1043573	(00000000–)	Screw, #10–14 X 0.675, Spl[Shcs,Selftap]	2
	8	19066	(00000000–)	Washer, Flat, 0.25b 0.56d .05, Pl, 10	2
	9	1025642	(00000000–)	Cord, Power, 16/3, 15ft Blk [Us]	1
	10	1032849	(00000000–)	Cord, Power, Blk [4.5meter, Ce]	1
	11	1048304	(00000000–)	Cord, Power [4.5meter, India, S.Africa]	1
	12	1032820	(00000000–)	Cord, Power, Blk [4.5meter, Uk]	1
	13	1026325	(00000000–)	Cord, Power, 1.0mm2/3 Blk[2.5meter, Aus]	1
	14	1026330	(00000000–)	Cord, Power, 1.0mm2 [2.5meter]	1
	15	1019426	(00000000–)	Cord, Chrgr, Ele, Tj	1

* Requires Tennant *True* service or an authorized Tennant service provider.

∇ Assembly

▲ Included in Assembly

Fig. 14 – Off–Board Charger Group

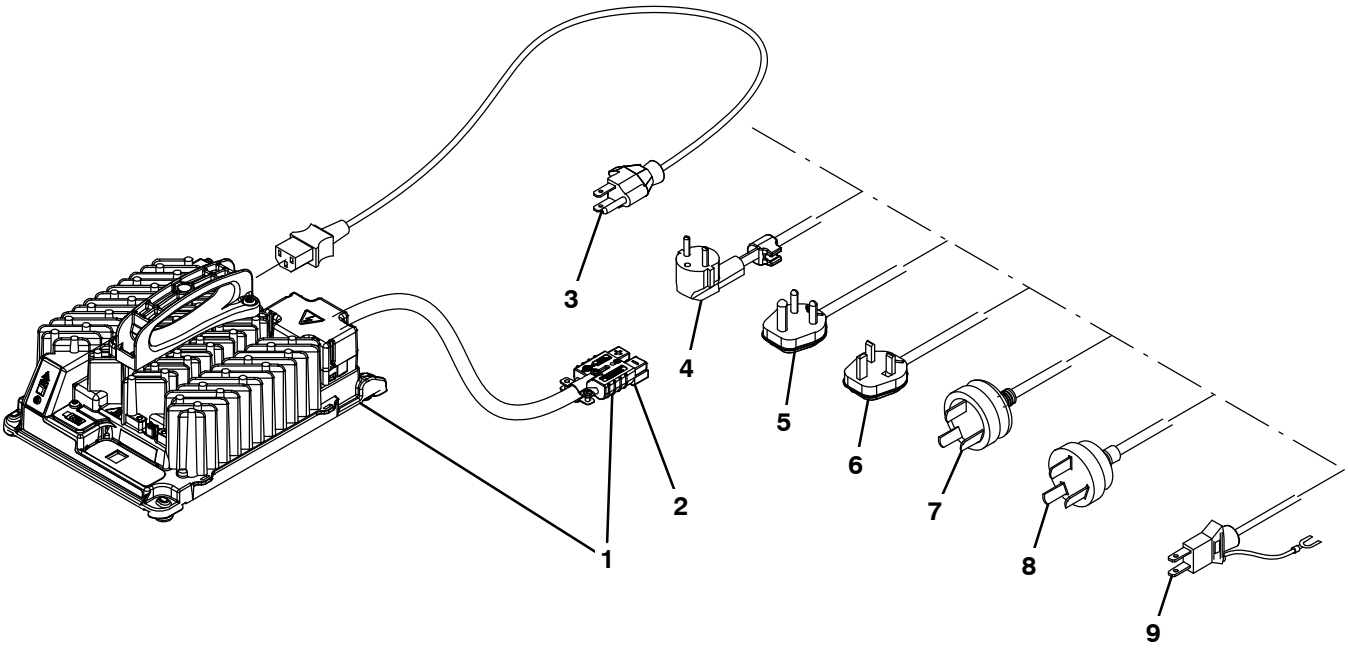

356767

Fig. 14 – Off–Board Charger Group

	Ref.	Part No.	Serial Number		Qty.
∇	1	1257204	(00000000–)	Charger, 24VDC, 650W, 100–240Vac [Off Board]	1
▲	2	605387	(00000000–)	Connector, Anderson, 050a, Red [W/O Con]	1
	3	1025642	(00000000–)	Cord, Power, 16/3, 15ft Blk [Us]	1
	4	1032849	(00000000–)	Cord, Power, Blk [4.5meter, Ce]	1
	5	1048304	(00000000–)	Cord, Power [4.5meter, India, S.Africa]	1
	6	1032820	(00000000–)	Cord, Power, Blk [4.5meter, Uk]	1
	7	1026325	(00000000–)	Cord, Power, 1.0mm2/3 Blk[2.5meter, Aus]	1
	8	1026330	(00000000–)	Cord, Power, 1.0mm2 [2.5meter]	1
	9	1019426	(00000000–)	Cord, Chrgr, Ele, Tj	1

∇ Assembly

▲ Included in Assembly

Fig. 15 – Documentation Group (Available Online Only)

Ref.	Part No.	Serial Number	Description	Qty.
	9016416	(00000000–)	Manual, Parts [T350, Na]	1
	9016417	(00000000–)	Manual, Oprtr [T350, En, Na]	1
	9016418	(00000000–)	Manual, Oprtr [T350, Es, Na]	1
	9016419	(00000000–)	Manual, Oprtr [T350, Fr, Na]	1
	9016420	(00000000–)	Manual, Oprtr [T350, Ptb]	1
	9016435	(00000000–)	Manual, Oprtr [T350, Kr]	1
	9016421	(00000000–)	Instr, Wall Chart [T350, Intl]	1
	9016422	(00000000–)	Manual, Service [T350, En]	1

To view, print, or download the latest Parts manual, other language Operator manuals, and Use and Care Guides (wall charts) visit:

www.tennantco.com/manual

SECTION 4

Contents **Page**

Fig. 1 – ec–H2O Nanoclean Module Assembly Breakdown, 9011810 4-2
Fig. 2 – ec–H2O Nanoclean Module Assembly Breakdown, 9021553 4-4

Fig. 1 – ec–H2O Nanoclean Module Assembly Breakdown, 9011810

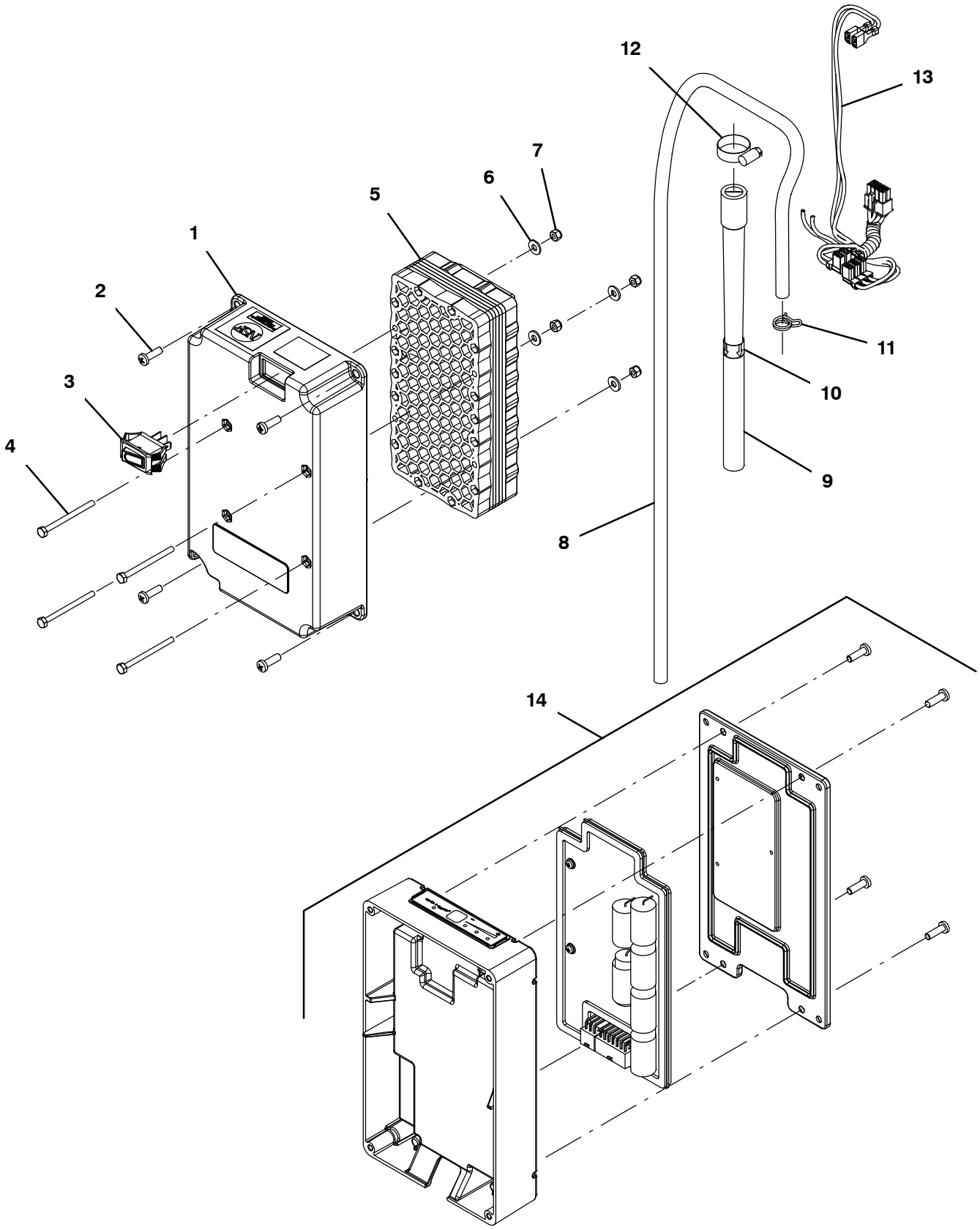

355317

Fig. 1 – ec–H2O Nanoclean Module Assembly Breakdown, 9011810

	Ref.	Part No.	Serial Number	Description	Qty.
∇		9011810	(00000000–)	Module Kit, Replmt [Ec–H2o, B 02] (Includes ec–H2O NanoClean Cartridge)	1
▲∇		9014126	(00000000–)	Ec–H2o Nc Kit [Module B, Plumbing]	1
▲▲	1	1208823	(00000000–)	Housing, Module, Upper, Ec–H2o	1
▲▲	2	1015506	(00000000–)	Screw, Pan, Phl, M5 X 16, Tcut [Plastic]	4
▲▲	3	1044393	(00000000–)	Switch, Rocker, Spst, Mom	1
▲▲	4	32509	(00000000–)	Screw, Hex, M4 X 0.70 X 50, Ss	4
▲▲	5	1235516	(00000000–)	Electrode, 5 Plate [De Nora Tech]	1
▲▲	6	41579	(00000000–)	Washer, Flat, 08, Ss	4
▲▲	7	33932	(00000000–)	Nut, Hex, Lock, M4 X 0.70, Nl, Ss	4
▲▲	8	1006415	(00000000–)	Hose, Afmkt, Pvc, Clr, 0.25id, 03ft	1
▲▲	9	1208526	(00000000–)	Hose, Molded, Bm08/Bm06	1
▲▲	10	1049637	(00000000–)	Label, Direction [Ec–H2o]	1
▲▲	11	613735	(00000000–)	Clamp, Hose, Wir, .40 – .42, Yel	1
▲▲	12	54333	(00000000–)	Clamp, Hose, Wormdrive, 0.31–0.88d, .31w	1
▲▲	13	1073286	(00000000–)	Harness, Ele, Module B2 [Ec–H2o]	1
▲∇	14	9014127*	(00000000–)	Controller Kit, Replmt [Ec–H2o Nc]	1
▲▲		9013646	(00000000–)	Cartridge, Ec–H2o Nanoclean Wcm, 270ml	1

***** Requires Tennant *True* service or an authorized Tennant service provider.

∇ Assembly

▲ Included in Assembly

Fig. 2 – ec–H2O Nanoclean Module Assembly Breakdown, 9021553

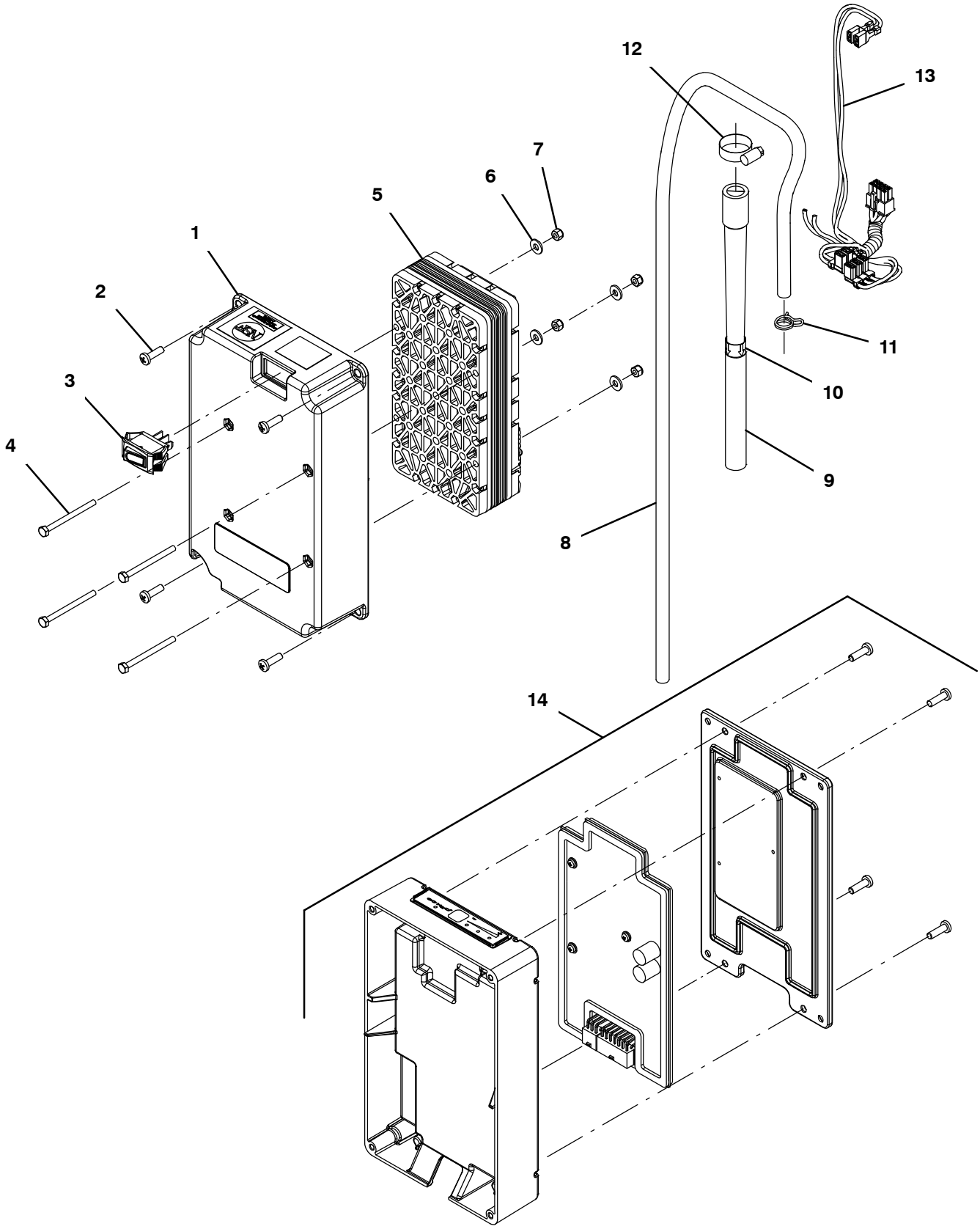

357148

Fig. 2 – ec–H2O Nanoclean Module Assembly Breakdown, 9021553

	Ref.	Part No.	Serial Number	Description	Qty.
∇		9021553	(00000000–)	Module Kit, Replmt [Ec–H2o, B 02] (Includes ec–H2O NanoClean Cartridge)	1
▲∇		9014126	(00000000–)	Ec–H2o Nc Kit [Module B, Plumbing]	1
▲▲	1	1208823	(00000000–)	Housing, Module, Upper, Ec–H2o	1
▲▲	2	1015506	(00000000–)	Screw, Pan, Phl, M5 X 16, Tcut [Plastic]	4
▲▲	3	1044393	(00000000–)	Switch, Rocker, Spst, Mom	1
▲▲	4	32509	(00000000–)	Screw, Hex, M4 X 0.70 X 50, Ss	4
▲▲	5	1235516	(00000000–)	Electrode, 5 Plate [De Nora Tech]	1
▲▲	6	41579	(00000000–)	Washer, Flat, 08, Ss	4
▲▲	7	33932	(00000000–)	Nut, Hex, Lock, M4 X 0.70, Nl, Ss	4
▲▲	8	1006415	(00000000–)	Hose, Afmkt, Pvc, Clr, 0.25id, 03ft	1
▲▲	9	1208526	(00000000–)	Hose, Molded, Bm08/Bm06	1
▲▲	10	1049637	(00000000–)	Label, Direction [Ec–H2o]	1
▲▲	11	613735	(00000000–)	Clamp, Hose, Wir, .40 – .42, Yel	1
▲▲	12	54333	(00000000–)	Clamp, Hose, Wormdrive, 0.31–0.88d, .31w	1
▲▲	13	1073286	(00000000–)	Harness, Ele, Module B2 [Ec–H2o]	1
▲∇	14	9020642*	(00000000–)	Controller Kit, Replmt [Ec–H2o Nc]	1
▲▲		9013646	(00000000–)	Cartridge, Ec–H2o Nanoclean Wcm, 270ml	1

***** Requires Tennant *True* service or an authorized Tennant service provider.

∇ Assembly

▲ Included in Assembly