800D

Cummins Powered

(SPECIALS)

Operator Manual

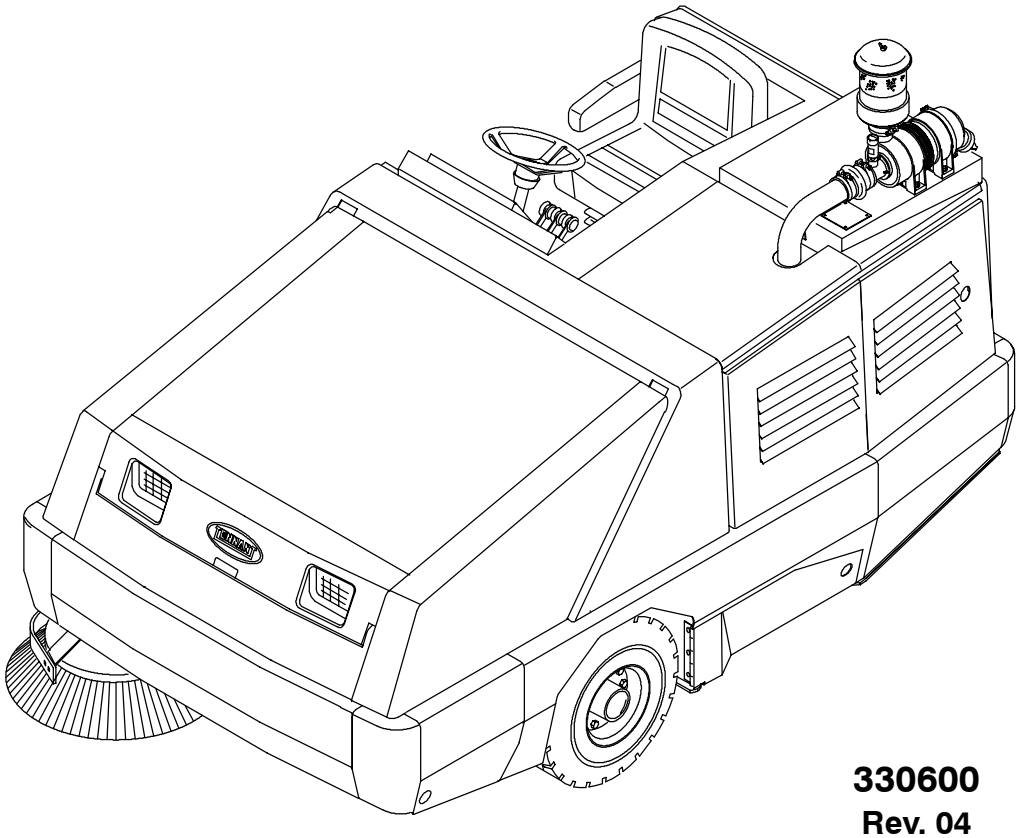

330600

Rev. 04

CD-Rom Part No. 311301

This manual is furnished with each new TENNANT Model 800D. It provides necessary operating and preventive maintenance instructions. Read this manual completely and understand the machine before operating or servicing it.

This machine will provide excellent service. However, the best results will be obtained at minimum costs if:

- The machine is operated with reasonable care.
- The machine is maintained regularly – per the maintenance instructions provided.
- The machine is maintained with TENNANT supplied or equivalent parts.

Manual Number – 330600

Revision: 04

Published: 11–02

CALIFORNIA PROPOSITION 65 WARNING:
Engine exhaust from this product contains chemicals known to the State of California to cause cancer, birth defects, or other reproductive harm.

Copyright © 2000, 2001, 2002 TENNANT, Printed in U.S.A.

CONTENTS

	Page
SAFETY PRECAUTIONS	3
OPERATION	5
OPERATOR RESPONSIBILITY	5
MACHINE COMPONENTS	7
CONTROL PANEL SYMBOLS	8
CONTROLS AND INSTRUMENTS	10
OPERATION OF CONTROLS	12
DIRECTIONAL PEDAL	12
BRAKE PEDAL	13
PARKING BRAKE	13
SIDE BRUSH SWITCH	14
SIDE BRUSH DOWN PRESSURE KNOB	14
THROTTLE LEVER	15
HOPPER DOOR LEVER	16
HOPPER ROLLOUT LEVER	17
HOPPER LIFT LEVER	18
HORN BUTTON	18
CHARGING SYSTEM LIGHT	19
ENGINE OIL PRESSURE LIGHT	19
ENGINE WATER TEMPERATURE LIGHT	19
HOPPER TEMPERATURE LIGHT – THERMO SENTRY™	19
MAIN BRUSH SHUT DOWN LIGHT	20
CLOGGED FILTER LIGHT	20
HOPPER DOOR LIGHT (OPTION)	20
FUEL LEVEL GAUGE	20
HOURMETER	21
HAZARD LIGHT SWITCH (OPTION)	21
OPERATING LIGHTS SWITCH	21
FILTER SHAKER SWITCH	22
VACUUM FAN SWITCH	22
IGNITION SWITCH	23
MAIN BRUSH SWITCH	24
STEERING WHEEL	25
STEERING WHEEL TILT LEVER	25
CIRCUIT BREAKERS	26
GLOW PLUGS LIGHT	26
MAIN BRUSH DOWN PRESSURE KNOB	27
LATCHES	27
OPERATOR SEAT	28
HOPPER SUPPORT BAR	28
WINDSHIELD WIPER SWITCH (OPTION)	29
DOME LIGHT SWITCH (OPTION)	29
HEATER KNOB (OPTION)	29
FAN SPEED SWITCH (OPTION)	30
AIR CONDITIONING SWITCH (OPTION)	30
AIR CONTROL VENTS (OPTION)	30
HOW THE MACHINE WORKS	31
PRE-OPERATION CHECKLIST	31
STARTING THE MACHINE	33
SWEEPING AND BRUSH INFORMATION	35
SWEEPING	37
STOP SWEEPING	39
EMPTYING THE HOPPER	40
STOP THE MACHINE	42
POST-OPERATION CHECKLIST	44
ENGAGING HOPPER SUPPORT BAR	45
DISENGAGING HOPPER SUPPORT BAR	47
OPERATION ON INCLINES	48
OPTIONS	49
VACUUM WAND	49
REGENERATIVE FILTER SYSTEM (RFS)	53
MACHINE TROUBLESHOOTING	54
MAINTENANCE	56
MAINTENANCE CHART	56
LUBRICATION	58
ENGINE	58
REAR WHEEL SUPPORT	58
FRONT WHEEL BEARINGS	59
SIDE BRUSH PIVOT PINS	59
MAIN BRUSH ADJUSTMENT	59
HYDRAULICS	60
HYDRAULIC FLUID RESERVOIR	60
HYDRAULIC FLUID	61
HYDRAULIC HOSES	61
PROPELLING MOTOR	62
ENGINE	62
COOLING SYSTEM	62
AIR FILTER INDICATOR	63
WATER SEPARATOR/FUEL FILTER	64
ENGINE FUEL FILTER	64
FUEL LINES	64
BATTERY	65
CHAINS	65
STATIC DRAG CHAIN	65
AIR CONDITIONING FILTER (OPTION)	65
DEBRIS HOPPER	66
HOPPER DUST FILTER	66
TO REMOVE OR REPLACE HOPPER DUST FILTER	66
THERMO SENTRY™	68
BRUSHES	68
MAIN BRUSH	68
TO REPLACE MAIN BRUSH	68
TO CHECK AND ADJUST MAIN BRUSH PATTERN	69
SIDE BRUSH	72
TO REPLACE SIDE BRUSH	72

CONTENTS

Page

SKIRTS AND SEALS 73
HOPPER LIP SKIRTS 73
BRUSH COMPARTMENT SKIRTS 73
REAR SKIRTS 74
BRUSH DOOR SEALS 74
HOPPER SEALS 74
HOPPER DOOR SEALS 74
HOPPER SIDE SKIRT 75
HOPPER DUST SEAL 75
HOPPER COVER SEAL 75
HOPPER VACUUM FAN SEAL 75
BRAKES AND TIRES 76
SERVICE BRAKES 76
PARKING BRAKE 76
TIRES 77
FRONT WHEEL 77
REAR WHEEL 77
PUSHING, TOWING, AND TRANSPORTING THE MACHINE 78
PUSHING OR TOWING THE MACHINE 78
TRANSPORTING THE MACHINE 79
MACHINE JACKING 81
STORING MACHINE 81
SPECIFICATIONS 82
GENERAL MACHINE DIMENSIONS/CAPACITIES 82
GENERAL MACHINE PERFORMANCE . . 83
STEERING 83
HYDRAULIC SYSTEM 83
BRAKING SYSTEM 83
TIRES 83
MACHINE DIMENSIONS 84
INDEX 85

SAFETY PRECAUTIONS

The following precautions are used throughout this manual as indicated in their description:

WARNING: To warn of hazards or unsafe practices which could result in severe personal injury or death.

FOR SAFETY: To identify actions which must be followed for safe operation of equipment.

The machine is suited to sweep disposable debris. Do not use the machine other than described in this Operator Manual. The machine is not designed for use on public roads.

The following information signals potentially dangerous conditions to the operator or equipment:

WARNING: Engine emits toxic gases. Severe respiratory damage or asphyxiation can result. Provide adequate ventilation. Consult with your regulatory authorities for exposure limits. Keep engine properly tuned.

WARNING: Raised hopper may fall. Engage hopper support bar.

WARNING: Lift arm pinch point. Stay clear of hopper lift arms.

WARNING: Moving belt and fan. Keep away.

FOR SAFETY:

1. **Do not operate machine:**
   - **unless trained and authorized.**
   - **unless operator manual is read and understood.**
   - **if it is not in proper operating condition.**
   - **in flammable or explosive areas unless designed for use in those areas.**
   - **in areas with possible falling objects unless equipped with overhead guard.**

2. **Before starting machine:**
   - **check for fuel, oil, and liquid leaks.**
   - **keep sparks and open flame away from refueling area.**
   - **make sure all safety devices are in place and operate properly.**
   - **check brakes and steering for proper operation.**

3. **When starting machine:**
   - **keep foot on brake and directional pedal in neutral.**

4. **When using machine:**
   - **use brakes to stop machine.**
   - **go slow on inclines and slippery surfaces.**
   - **use care when reversing machine.**
   - **move machine with care when hopper is raised.**
   - **make sure adequate clearance is available before raising hopper.**
   - **do not carry passengers on machine.**
   - **always follow safety and traffic rules.**
   - **report machine damage or faulty operation immediately.**
5. **Before leaving or servicing machine:**
   - **stop on level surface.**
   - **set parking brake.**
   - **turn off machine and remove key.**

6. **When servicing machine:**
   - **avoid moving parts. do not wear loose jackets, shirts, or sleeves.**
   - **block machine tires before jacking machine up.**
   - **jack machine up at designated locations only. Block machine up with jack stands.**
   - **use hoist or jack that will support the wieght of the machine.**
   - **wear eye and ear protection when using pressurized air or water.**
   - **disconnect battery connections before working on machine.**
   - **avoid contact with battery acid.**
   - **avoid contact with hot engine coolant.**
   - **allow engine to cool.**
   - **keep flames and sparks away from fuel system service area. Keep area well ventilated.**
   - **use cardboard to locate leaking hydraulic fluid under pressure.**
   - **use tennant supplied or approved replacement parts.**

7. **When loading/unloading machine onto/off truck or trailer:**
   - **Turn off machine.**
   - **Use truck or trailer that will support the weight of the machine.**
   - **Use winch. Do not drive the machine onto/off the truck or trailer unless the load height is 380 mm (15 in) or less from the ground.**
   - **Set parking brake after machine is loaded.**
   - **Block machine tires.**
   - **Tie machine down t truck or trailer.**

The following safety labels are mounted on the machine in the locations indicated. If these or any label becomes damaged or illegible, install a new label in its place.

EMISSIONS LABEL - LOCATED ON THE FRONT PANEL OF THE OPERATOR COMPARTMENT.

NOISE LABEL - LOCATED ON THE FRONT PANEL OF THE OPERATOR COMPARTMENT.

FOR SAFETY LABEL - LOCATED ON THE FRONT PANEL OF THE OPERATOR COMPARTMENT.

ENGINE FAN AND BELT LABEL - LOCATED ON THE RADIATOR SHROUD.

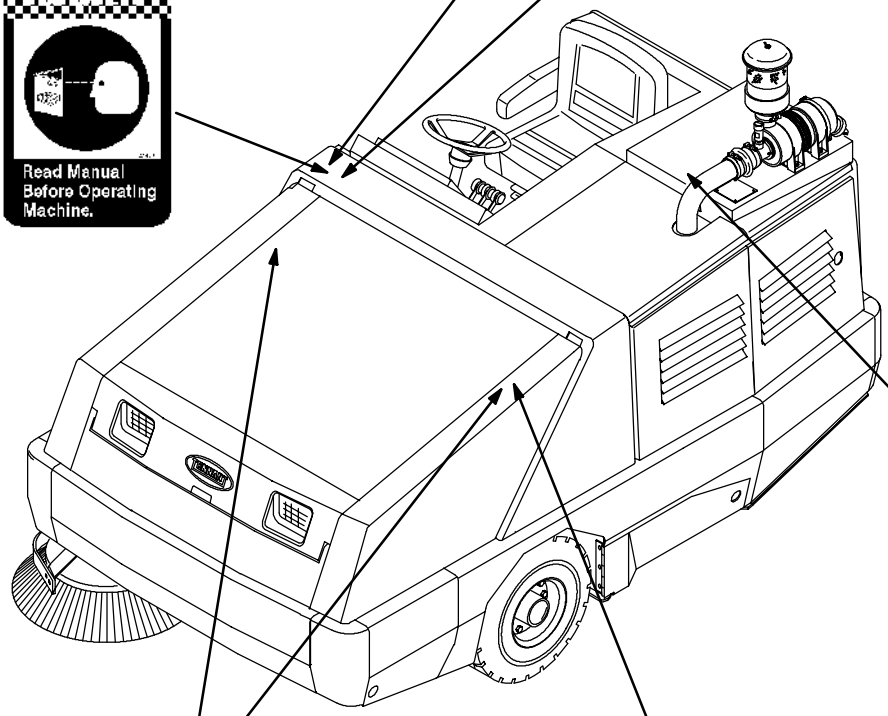

353232

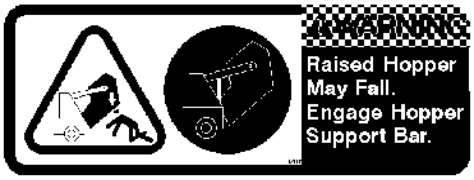

HOPPER SUPPORT BAR LABEL - LOCATED ON THE HOPPER LIFT ARMS CROSS-TUBE AND ON BOTH HOPPER LIFT ARMS.

HOPPER LIFT ARMS LABEL - LOCATED ON BOTH HOPPER LIFT ARMS.

OPERATION

OPERATOR RESPONSIBILITY

- ❑ The operator's responsibility is to take care of the daily maintenance and checkups of the machine to keep it in good working condition. The operator must inform the service mechanic or supervisor when the required maintenance intervals occur as stated in the *MAINTENANCE* section of this manual.

- ❑ Read this manual carefully before operating this machine.

  FOR SAFETY: Do not operate machine, unless operation manual is read and understood.

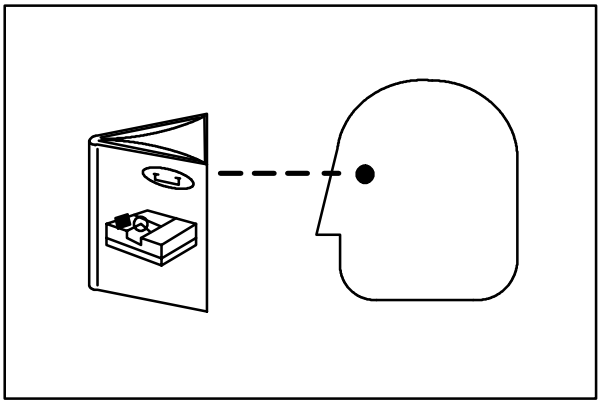

07324

- ❑ Check the machine for shipping damage. Check to make sure machine is complete per shipping instructions.

- ❑ Check the hydraulic fluid level in the hydraulic reservoir.

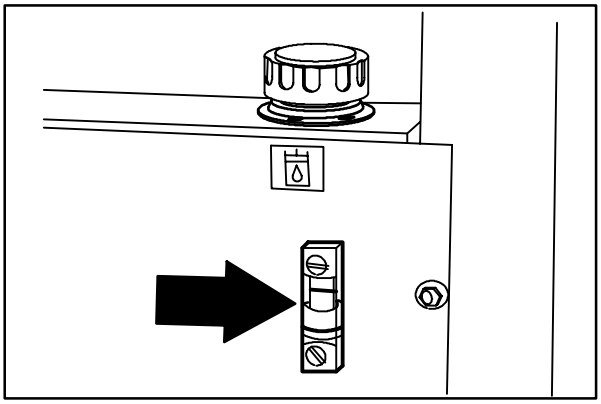

08430

- ❑ Check the engine oil level.

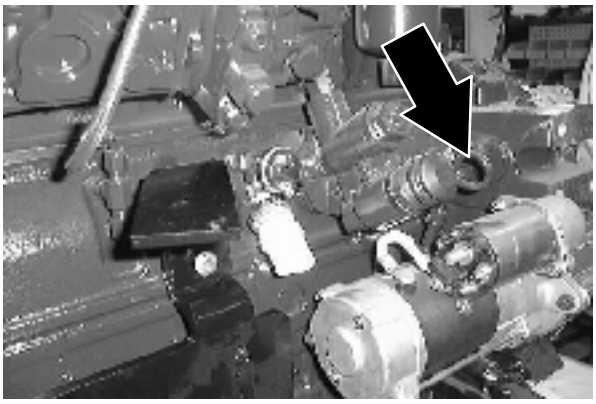

❑ Check the radiator coolant level. The coolant level should be 25 to 50 mm (1 to 2 in) below the fill opening.

FOR SAFETY: When servicing machine, avoid contact with hot engine coolant.

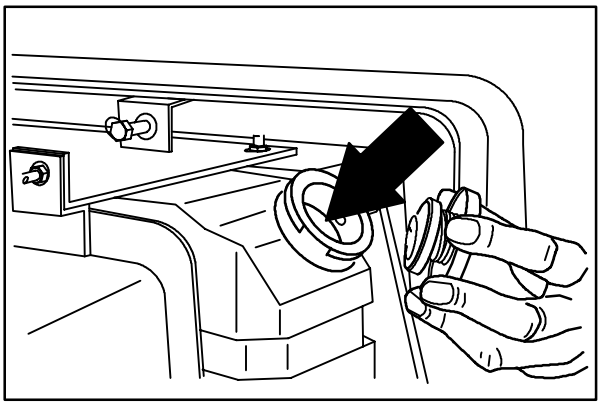

08432

❑ Fill the fuel tank.

FOR SAFETY: When servicing machine, keep flames and sparks away from fuel system service area. Keep area well ventilated.

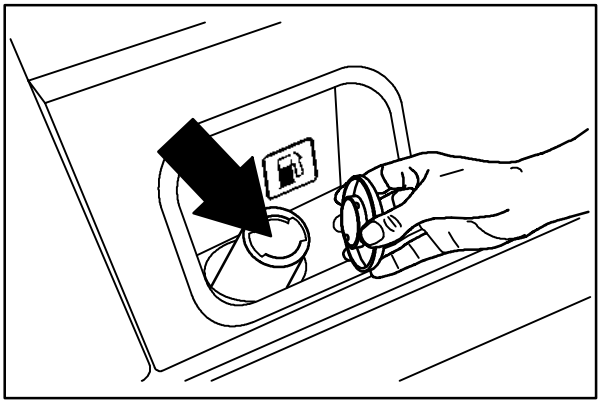

08433

❑ After the first 50 hours of operation, follow the recommended procedures stated in the *MAINTENANCE CHART*.

❑ Keep your machine regularly maintained by following the maintenance information in this manual. We recommend taking advantage of a regularly scheduled service contract from your TENNANT representative.

❑ Order parts and supplies directly from your authorized TENNANT representative. Use the parts manual provided when ordering parts.

MACHINE COMPONENTS

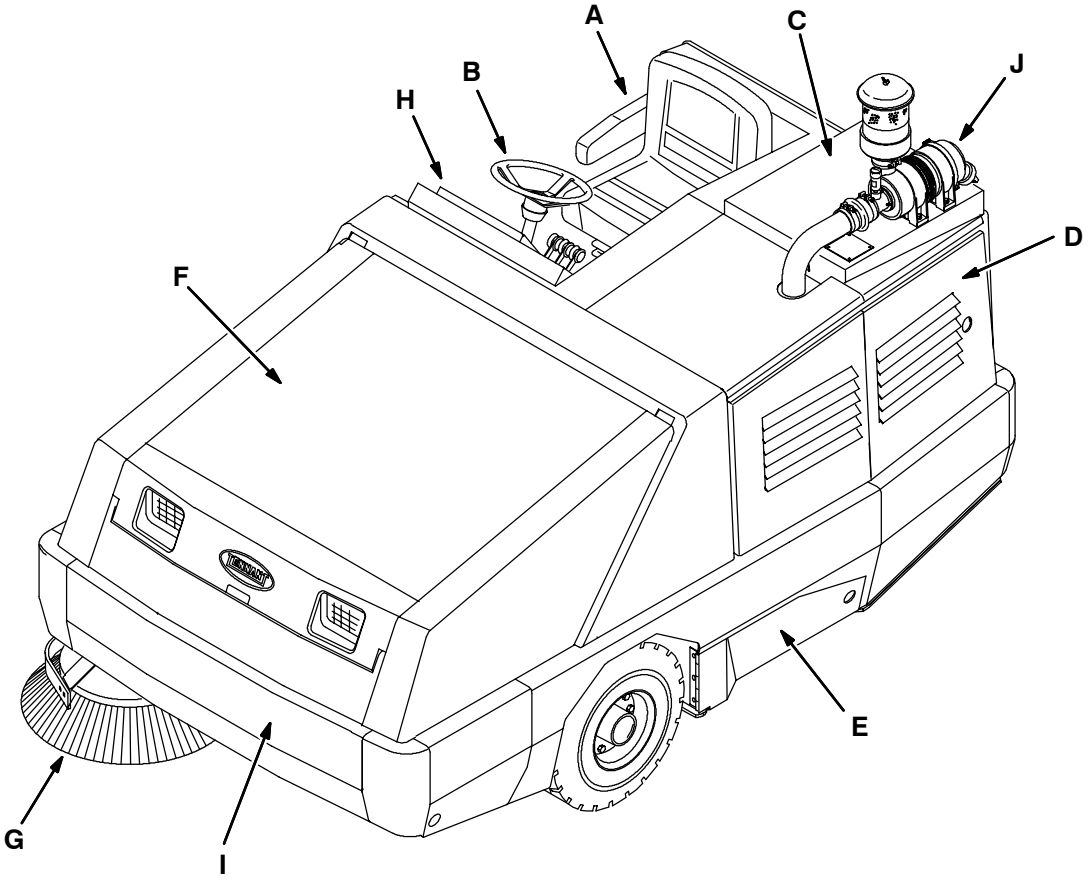

353232

A. Operator Seat
B. Steering Wheel
C. Engine Cover
D. Engine Side Door
E. Main Brush Access Door
F. Hopper Cover
G. Side Brush
H. Instrument Panel
I. Hopper Door
J. Air Filter Assembly

CONTROL PANEL SYMBOLS

These symbols identify controls and displays on the machine:

- Engine Oil Pressure
- Engine Water Temperature
- Side Brush Down Pressure Light
- Side Brush Down Pressure Heavy
- Side Brush Down and On
- Side Brush Up and Off
- Hopper Door Close
- Hopper Door Open
- Hopper Roll In
- Hopper Roll Out
- Hopper Down
- Hopper Up
- Horn
- Charging System
- Hopper Temperature – Thermo Sentry™
- Main Brush Shut Down
- Filter Clogged
- Hopper Door Closed
- Fuel
- Hourmeter
- Hazard Light
- Operating Lights
- Fan
- Engine Speed
- Steering Wheel Tilt
- Main Brush Down and II Speed™
- Main Brush Off
- Main Brush Down and Normal Speed

Main Brush Down Pressure Light

Main Brush Down Pressure Heavy

Circuit Breaker 1

Circuit Breaker 2

Circuit Breaker 3

Circuit Breaker 4

Circuit Breaker 5

Circuit Breaker 6

Circuit Breaker 7

Circuit Breaker 8

Circuit Breaker 9

Parking Brake

Glow Plugs (Preheat)

Hydraulic Filter Clogged

CONTROLS AND INSTRUMENTS

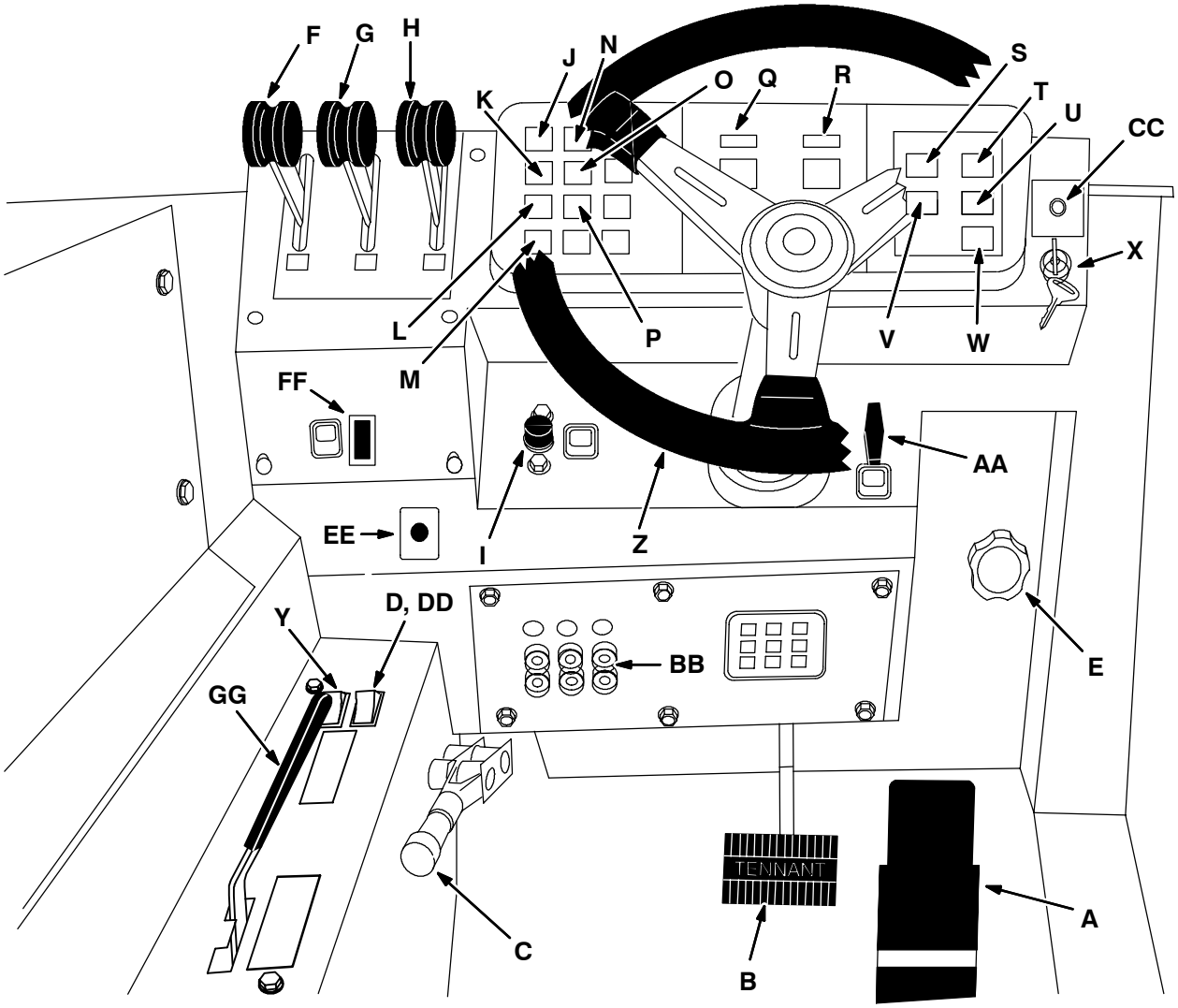

353289

A. Directional Pedal
B. Brake Pedal
C. Parking Brake Lever
D. Side Brush Switch
E. Side Brush Down Pressure Knob
F. Hopper Door Lever
G. Hopper Rollout Lever
H. Hopper Lift Lever
I. Horn Button
J. Charging System Light
K. Engine Oil Pressure Light
L. Engine Water Temperature Light
M. Hopper Temperature Light - Thermo Sentry™
N. Main Brush Shut Down Light
O. Clogged Filter Light
P. Hopper Door Light (Option)
Q. Fuel Level Gauge
R. Hourmeter
S. Hazard Light Switch (Option)
T. Operating Light Switch
U. Filter Shaker Switch
V. Vacuum Fan Switch
W. Engine Speed Switch
X. Ignition Switch
Y. Main Brush Switch
Z. Steering Wheel
AA. Steering Column Tilt Lever
BB. Circuit Breakers
CC. Glow Plugs Light
DD. Side Brush Switch, Left (Option)
EE. Heater Cable (Option)
FF. Clogged Hydraulic Filter Light
GG. Throttle Lever

OPERATION OF CONTROLS

DIRECTIONAL PEDAL

The directional pedal controls direction of travel and the propelling speed of the machine. You change the speed of the machine with the pressure of your foot; the harder you press the faster the machine travels.

Forward: Press the top of the directional pedal with the toe of your foot.

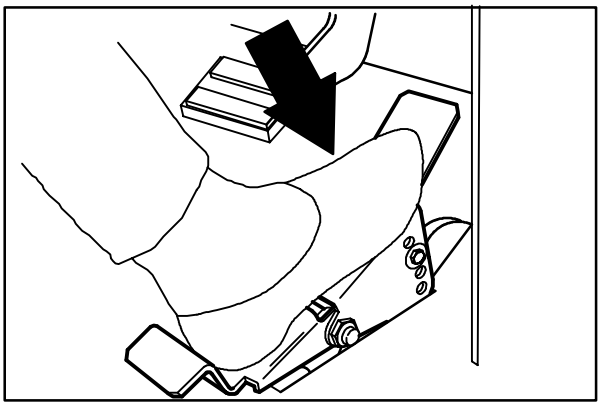

08467

Reverse: Press the bottom of the directional pedal with the heel of your foot.

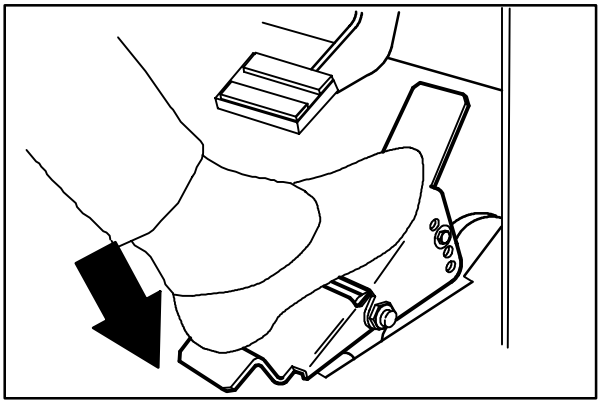

08468

Neutral: Take your foot off the directional pedal and it will return to the neutral position.

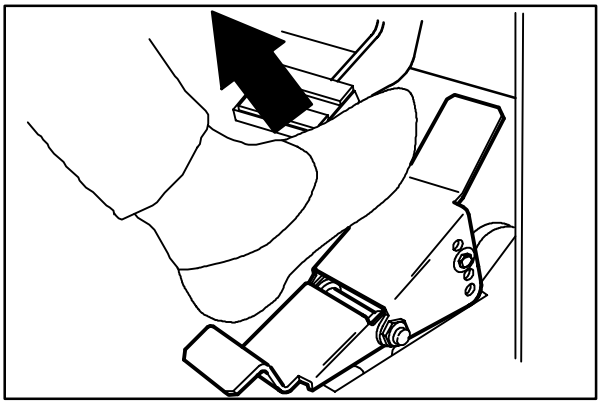

08469

The toe angle of the directional pedal is adjustable. Remove the clevis pin, move the top of the pedal to the angle needed, and put the clevis pin through the adjustment holes.

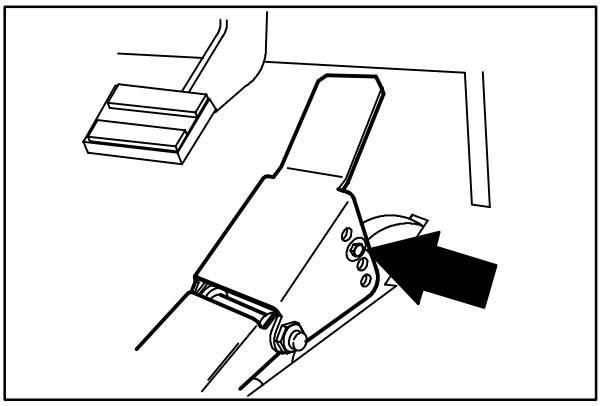

08470

BRAKE PEDAL

The brake pedal stops the machine.

Stop: Take your foot off the directional pedal and let it return to the neutral position. Step on the brake pedal.

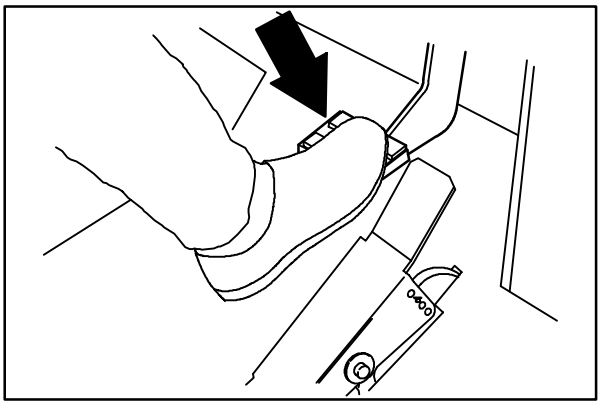

08471

PARKING BRAKE

The parking brake lever sets and releases the front wheel brakes.

Set: Pull the parking brake lever up.

> **FOR SAFETY: Before leaving or servicing machine; stop on level surface, set parking brake, turn off machine and remove key.**

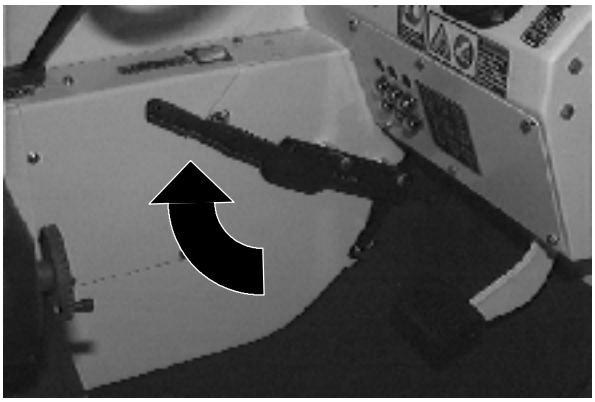

Release: Push the parking brake lever down.

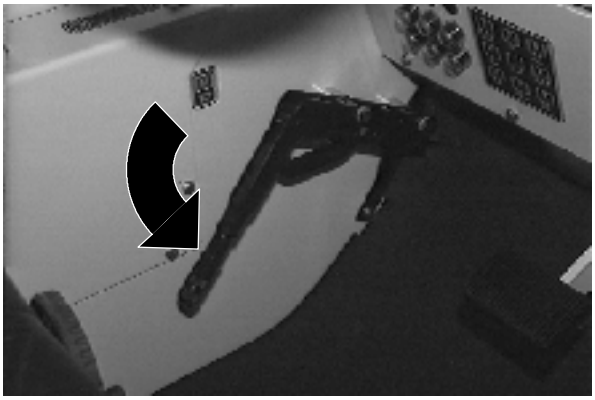

SIDE BRUSH SWITCH

The right side brush switch controls the right side brush position and rotation. The optional left side brush switch controls the optional left side brush position and rotation.

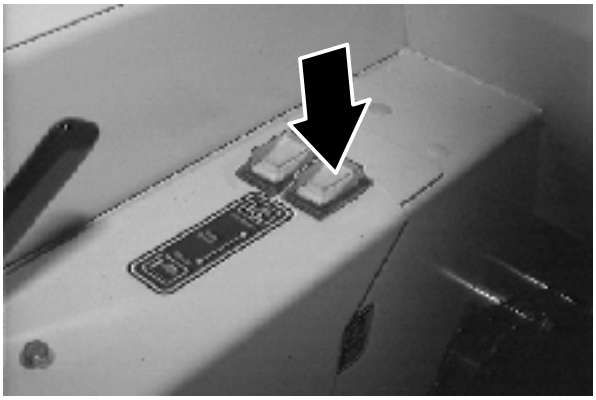

Down and On: Press the top of the switch into the **On**/**Down** position.

Up and Off: Press the bottom of the switch into the **Off**/**Up** position.

SIDE BRUSH DOWN PRESSURE KNOB

The side brush down pressure knob changes the side brush contact with the sweeping surface.

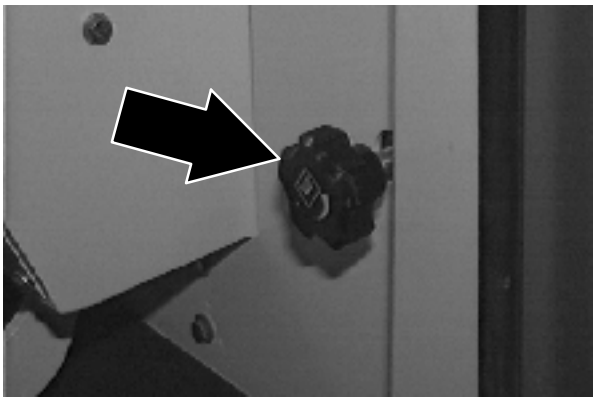

Increase Pressure: Turn the side brush down pressure knob counter-clockwise.

Decrease Pressure: Turn the side brush down pressure knob clockwise.

THROTTLE LEVER

The throttle lever controls the engine speed.

Fast: Pull the lever into the **Fast** position.

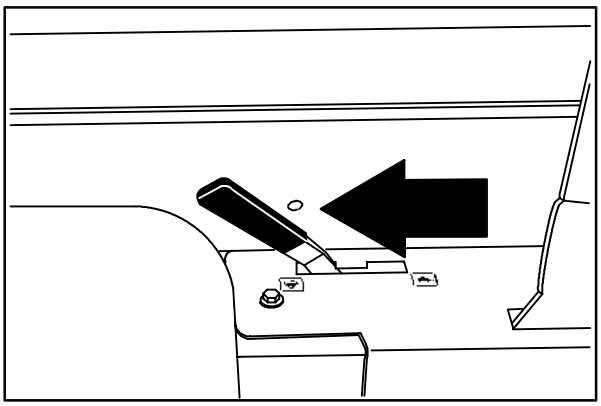

08456

Idle: Push the lever into the **Idle** position.

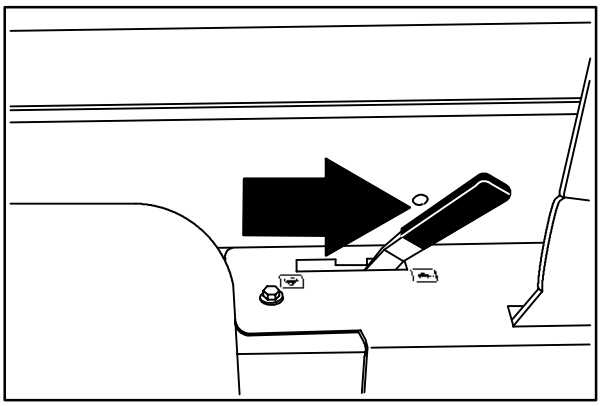

08457

HOPPER DOOR LEVER

The hopper door lever opens and closes the hopper door. Close the hopper door when emptying the hopper to control debris and dust.

Open: Pull and hold the hopper door lever in the **Open** position.

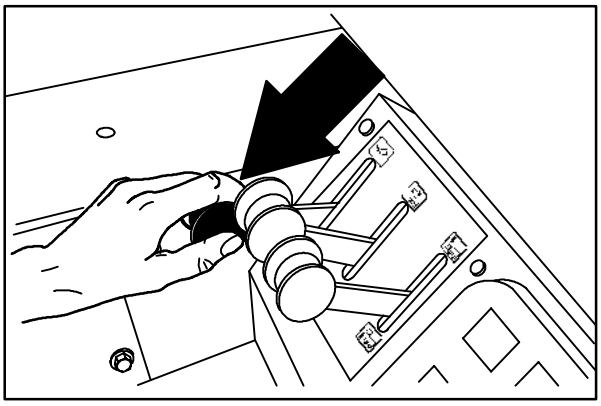

08474

Hold: Release the hopper door lever into the middle position.

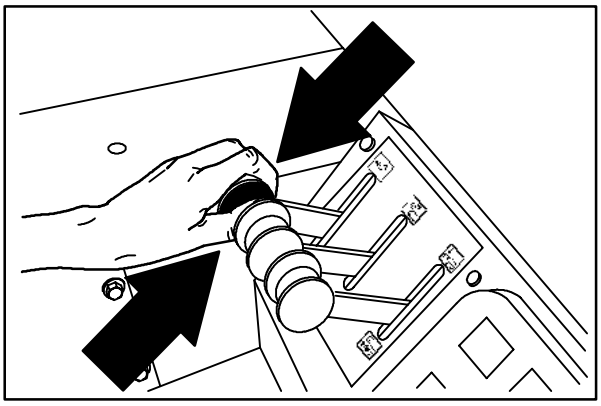

08475

Close: Push and hold the hopper door lever in the **Close** position.

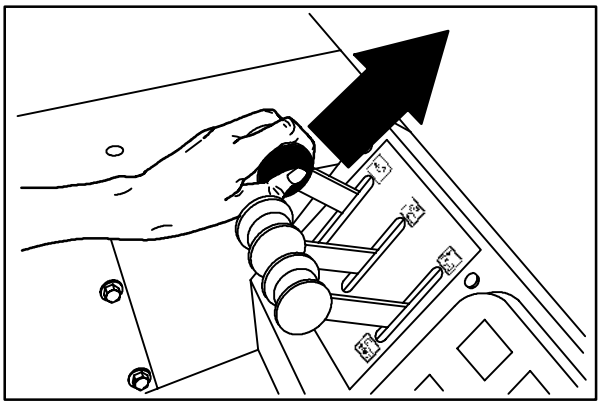

08476

HOPPER ROLLOUT LEVER

The hopper rollout lever moves the hopper in and out.

Out: Pull and hold the hopper rollout lever in the **Out** position.

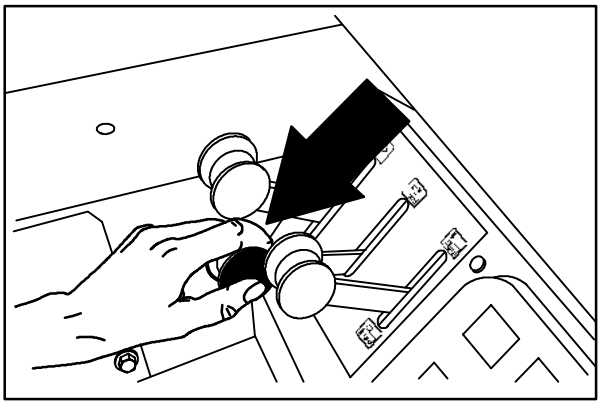

08477

Hold: Release the hopper rollout lever into the middle position.

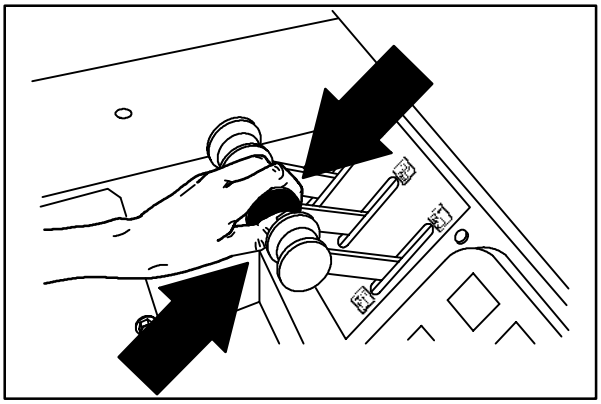

08478

In: Push and hold the hopper rollout lever in the **In** position.

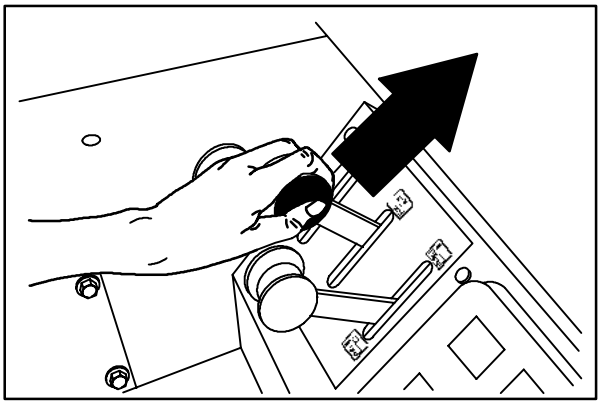

08479

HOPPER LIFT LEVER

The hopper lift lever raises and lowers the hopper.

Raise: Pull and hold the hopper lift lever in the **Up** position.

WARNING: Raised hopper may fall. Engage hopper support bar.

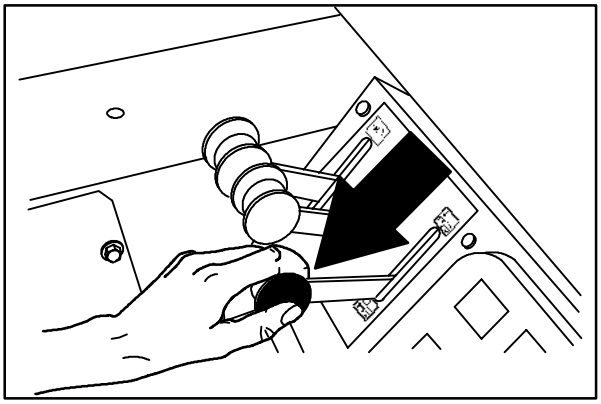

08480

Hold: Release the hopper lift lever up and into the middle position.

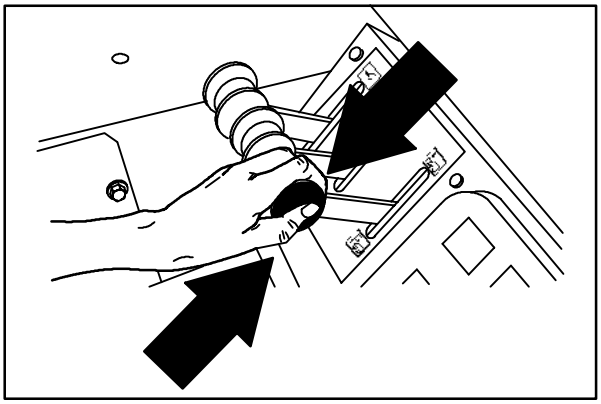

08481

Lower: Push and hold the hopper lift lever in the **Down** position.

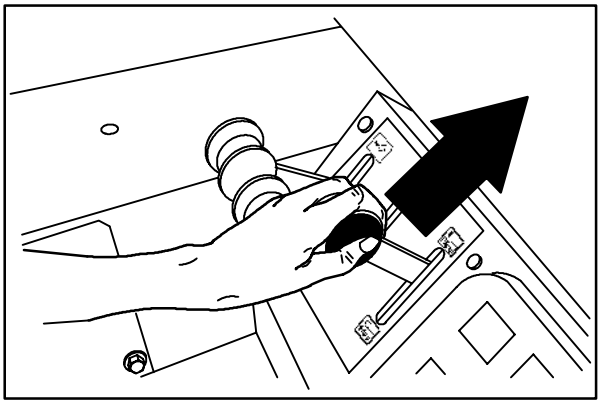

08482

HORN BUTTON

The horn button operates the horn.

Sound: Press the button.

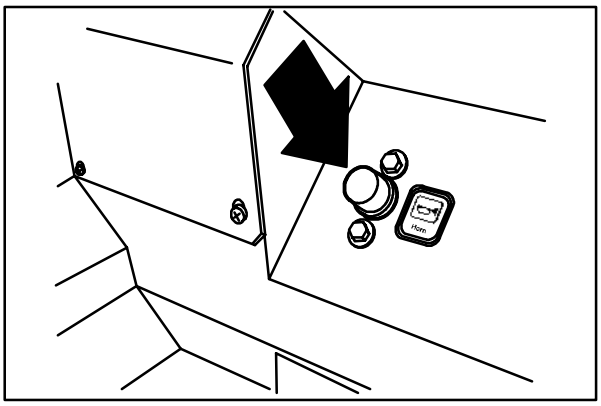

08438

CHARGING SYSTEM LIGHT

The charging system light comes on when the existing voltage potential of the battery is not within normal range (10 to 14 Volts). Stop operating the machine. Locate the problem and have it corrected.

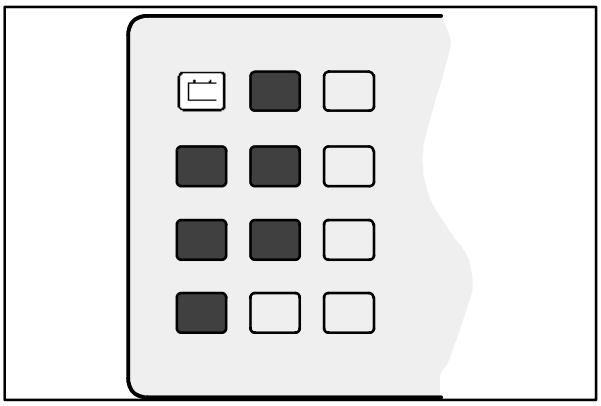

07757

ENGINE OIL PRESSURE LIGHT

The engine oil pressure light comes on when the engine oil pressure falls below 35 kPa (5 psi). Stop operating the machine. Locate the problem and have it corrected.

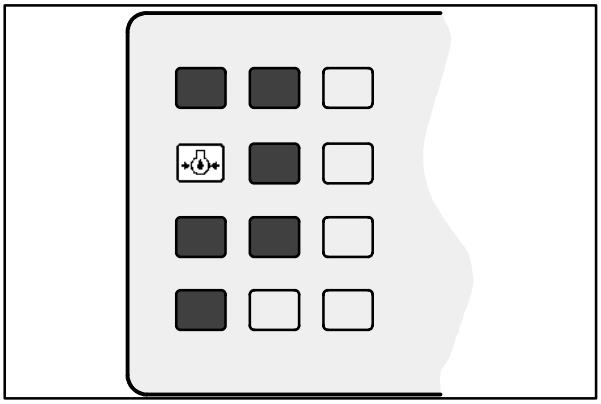

07758

ENGINE WATER TEMPERATURE LIGHT

The engine water temperature light comes on when the temperature of the engine coolant is more than 107° C (225° F). Stop operating the machine. Locate the problem and have it corrected.

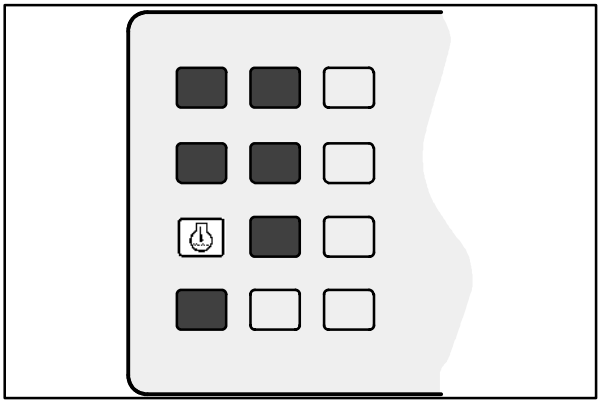

07759

HOPPER TEMPERATURE LIGHT - THERMO SENTRY™

The hopper temperature light comes on when there is too much heat in the hopper, possibly from a fire. The Thermo Sentry™ will stop the vacuum fan.

The Thermo Sentry™ has to be reset manually, see *THERMO SENTRY ™* in *MAINTENANCE.*

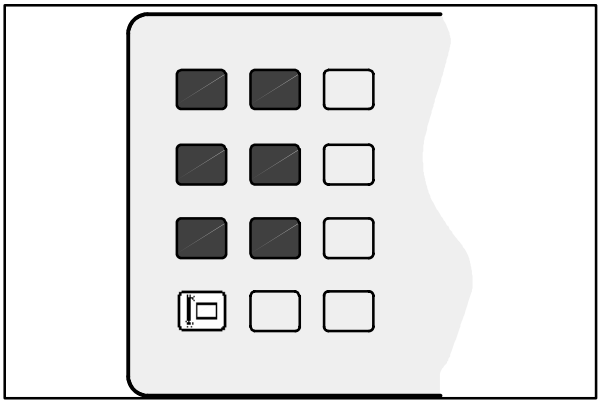

07760

MAIN BRUSH SHUT DOWN LIGHT

The main brush shut down light comes on when there is excessive down pressure for the main brush, or there is a problem with the main and side brush hydraulic motor circuit. The brush pressures can be reduced with the main brush and side brush pressure knobs.

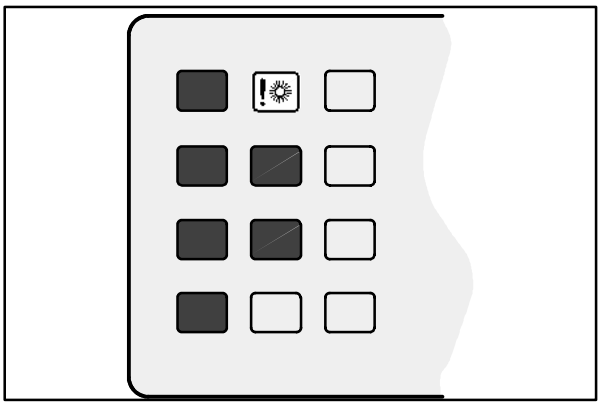

07761

CLOGGED FILTER LIGHT

The clogged filter light comes on when the hopper dust filter is clogged. If the machine is equipped with a Regenerative Filter System (RFS) option, the light will remain on for a few seconds each time the RFS cycles.

To clean the filter, press the filter shaker switch. If the clogged filter light remains lit, manually clean the hopper dust filter. See *HOPPER DUST FILTER* in *MAINTENANCE.*

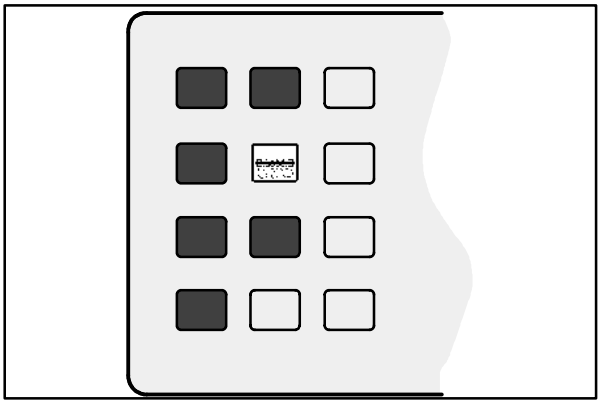

07762

HOPPER DOOR LIGHT (OPTION)

The hopper door light comes on when the hopper door is open. Make sure the hopper door is closed and the hopper door light is off, before sweeping with the machine.

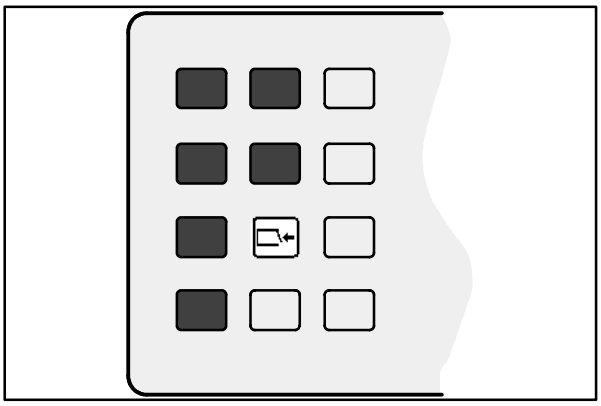

07763

FUEL LEVEL GAUGE

The fuel level gauge indicates how much fuel is in the fuel tank with a segmented LED light. When the tank is full, all ten of the segments are lit. As the fuel tank empties, the segments shut off. The fuel tank is empty when all ten of the segments have shut off.

NOTE: Do not let the fuel tank empty completely. Air can enter the fuel system. The fuel system will need bleeding before the next engine start.

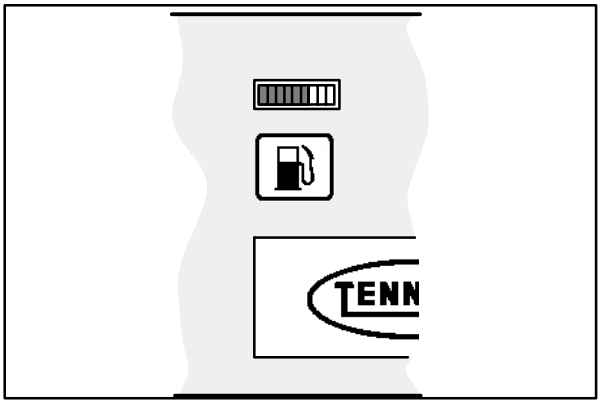

07764

HOURMETER

The hourmeter records the number of hours the machine has been operated. Use this information to determine machine maintenance intervals.

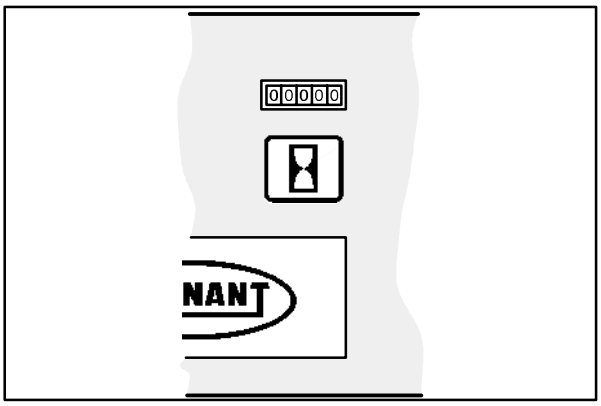

07765

HAZARD LIGHT SWITCH (OPTION)

The hazard light switch powers on and off the hazard light.

On: Press the hazard light switch. The indicator light above the switch will come on.

Off: Press the hazard light switch. The indicator light above the switch will go off.

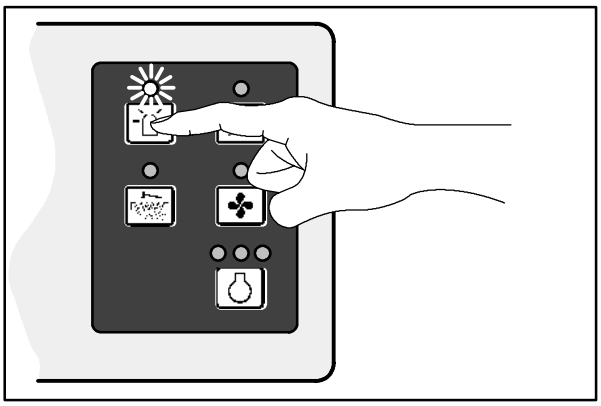

07766

OPERATING LIGHTS SWITCH

The operating lights switch powers on and off the headlights and taillights.

On: Press the operating lights switch. The indicator light above the switch will come on.

Off: Press the operating lights switch. The indicator light above the switch will go off.

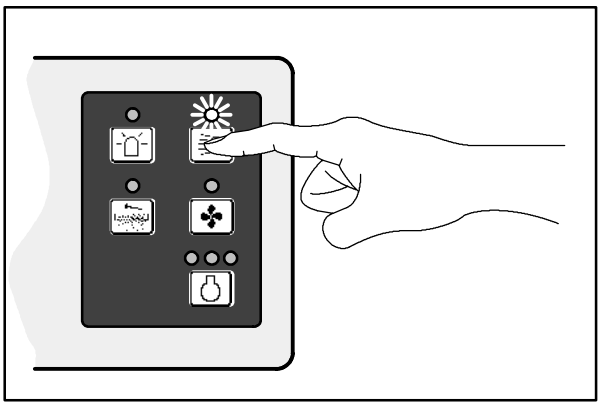

07768

FILTER SHAKER SWITCH

The filter shaker switch starts the hopper dust filter shaker. The shaker automatically operates for 40 seconds.

Start: Press the filter shaker switch. The indicator light will remain on while the filter shaker is operating.

Stop: Press the filter shaker switch again ***IF*** wanting to stop the filter shaker during the 40 second shaking cycle.

NOTE: The vacuum fan shuts off while the filter shaker is operating.

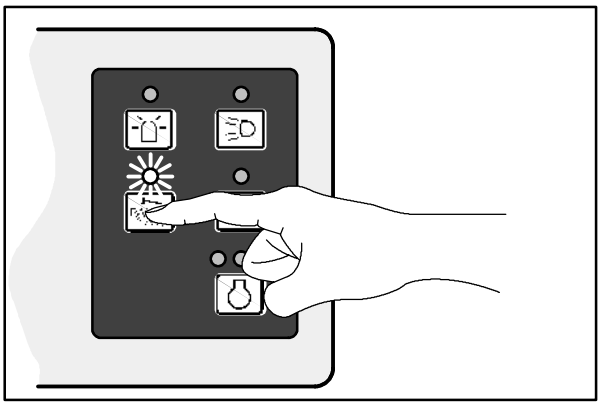

07767

VACUUM FAN SWITCH

The vacuum fan switch starts and stops the vacuum fan.

Start: Press the vacuum fan switch. The indicator light above the switch will come on.

Stop: Press the vacuum fan switch. The indicator light above the switch will go off.

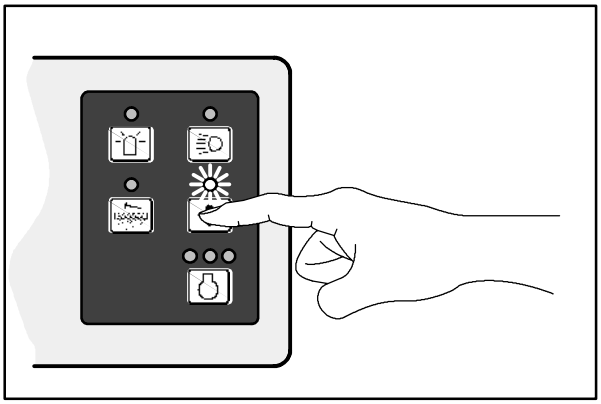

07769

IGNITION SWITCH

The ignition switch starts and stops the engine with a key.

Turn the key counter–clockwise. The glow plug light will come on. When the glow plug light goes out (5 to 15 seconds) the engine is ready to start.

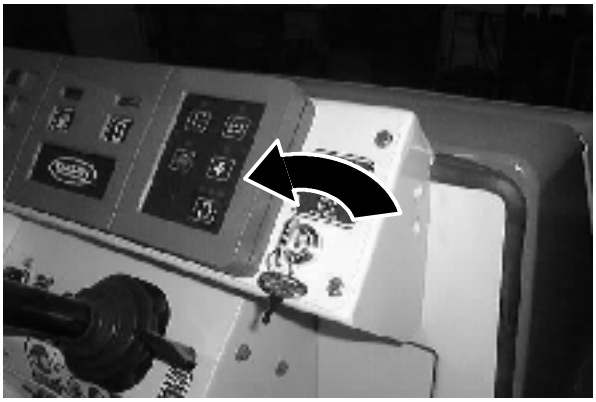

Start: Turn the key all the way clockwise. Release the key as soon as the engine starts.

Stop: Turn the key counter-clockwise.

MAIN BRUSH SWITCH

The main brush switch controls the main brush position and rotation.

Main Brush Down and Normal Speed: Press the front **Normal** position of the switch.

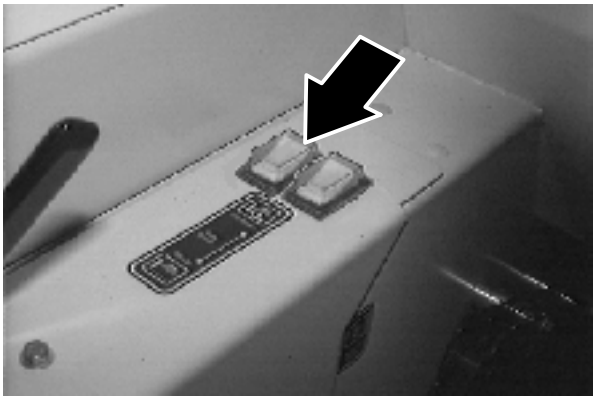

Main Brush Up and Off: Place the switch in the middle **Off** position.

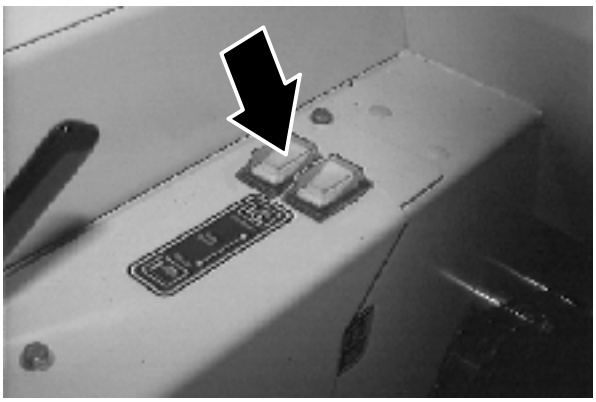

Main Brush Down and II Speed™: Press the rear **II Speed™** position of the switch.

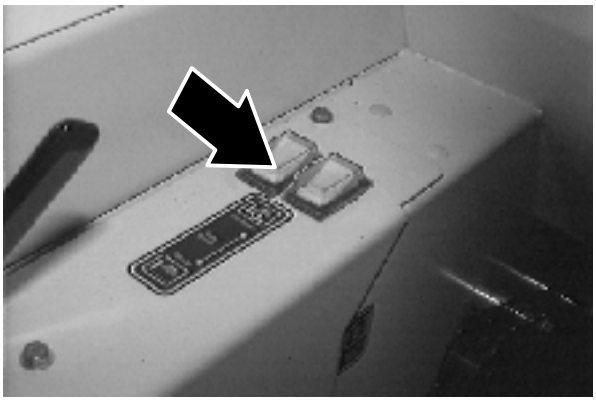

STEERING WHEEL

The steering wheel controls the machine's direction. The machine is very responsive to the steering wheel movements.

Left: Turn the steering wheel to the left.

Right: Turn the steering wheel to the right.

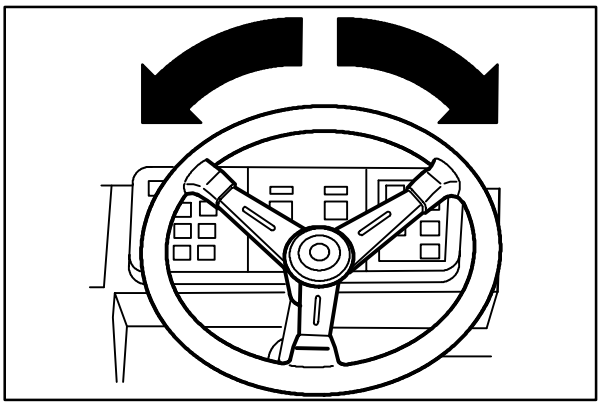

08484

STEERING WHEEL TILT LEVER

The steering wheel tilt lever controls the angle of the steering wheel.

Adjust: Pull out the tilt lever, move the wheel up or down, and release the tilt lever.

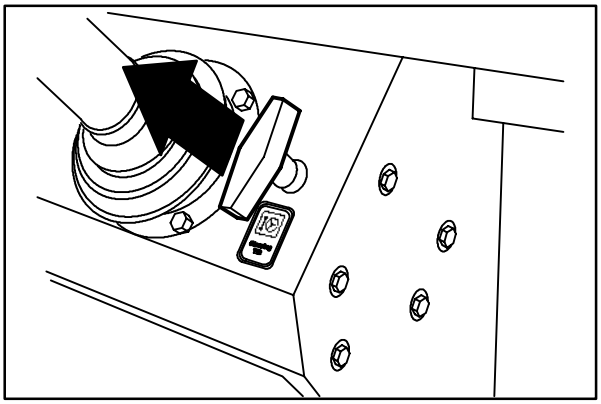

08439

CIRCUIT BREAKERS

The circuit breakers are resetable electrical circuit protection devices. Their design stops the flow of current in the event of a circuit overload. Once a circuit breaker is tripped, it must be reset manually. Press the reset button after the breaker has cooled down.

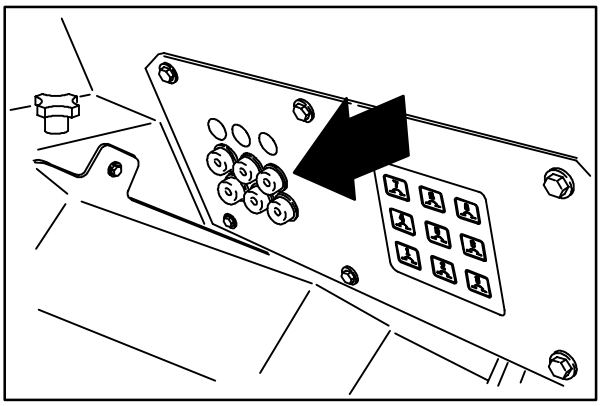

08440

If the overload that caused the circuit breaker to trip is still there, the circuit breaker will continue to stop current flow until the problem is corrected.

All but two of the circuit breakers are located in the operator compartment. There are two 30 Amp circuit breakers located behind the circuit breaker panel that can be accessed by raising the hopper. The 30 Amp circuit breakers are self-resetting: they will reset themselves, after cooling down, after being tripped.

The chart lists the circuit breakers and the electrical components they protect.

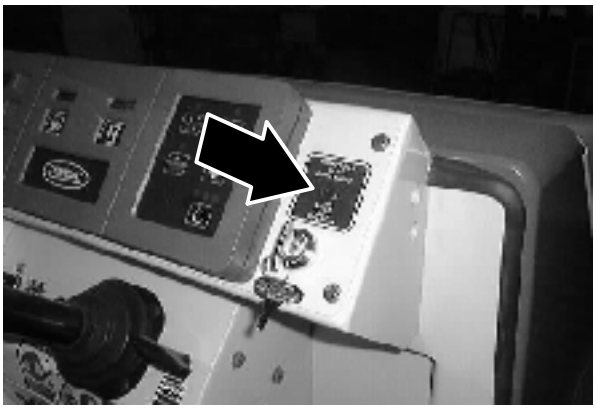

Circuit Breaker	Rating	Circuit Protected
CB-1	15 A	Horn
CB-2	15 A	Filter shaker
CB-3	15 A	Controls
CB-4	15 A	Instrument panel
CB-5	15 A	Hazard light
CB-6	2.5 A	Brushes
CB-7	15 A	Left side brush option
CB-8	15 A	Cab accessories
CB-9	15 A	Accessories
CB-10	30 A	AC compressor/blower
CB-11	30 A	AC condenser/fans

GLOW PLUGS LIGHT

The glow plugs light comes on when the ignition switch is turned counter-clockwise. The light will go out when the engine is ready to start, usually after 5 to 15 seconds, depending on weather conditions.

MAIN BRUSH DOWN PRESSURE KNOB

The main brush down pressure knob changes the main brush contact with the sweeping surface.

Increase Pressure: Turn the main brush down pressure knob counter-clockwise.

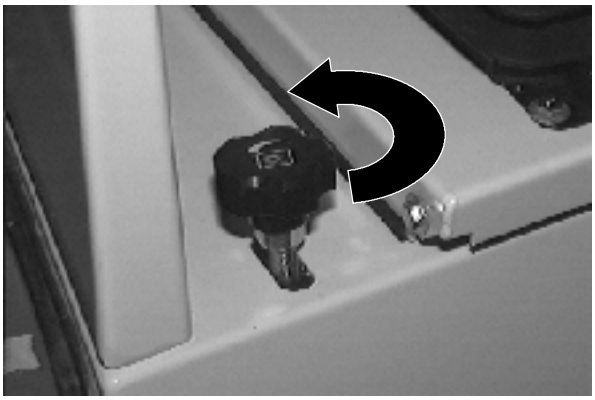

Decrease Pressure: Turn the main brush down pressure knob clockwise.

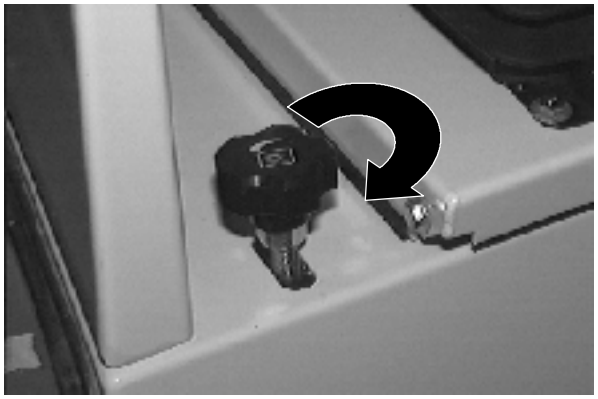

LATCHES

The side doors, rear door, engine cover, and hopper cover are secured with latches.

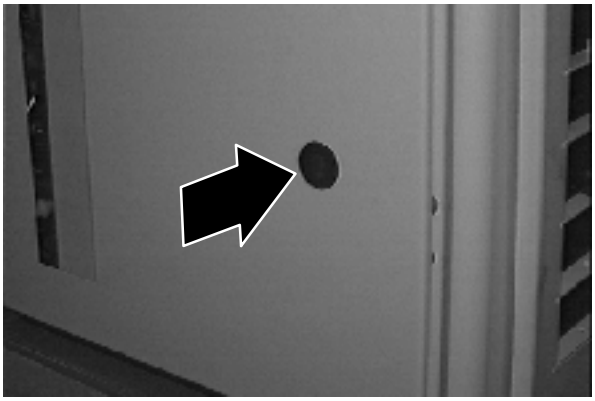

Open the Main Brush Side Doors: Pull up on the door latch.

Open the Engine Side Door: Pull up on the door latch.

Open the Rear Door: Push the latch to the left.

Open the Engine Cover: Push in on the cover latch.

Open the Hopper Cover: Push the latch to the right.

Open Rear Bumper Door: Push the latch to the left.

OPERATOR SEAT

The operator seat has two adjustments. The adjustments are for the front to rear seat position and ride stiffness.

The seat front-to-rear position is adjusted by the seat position lever.

Adjust: Push the lever forward, slide the seat backward or forward to the desired position and release the lever.

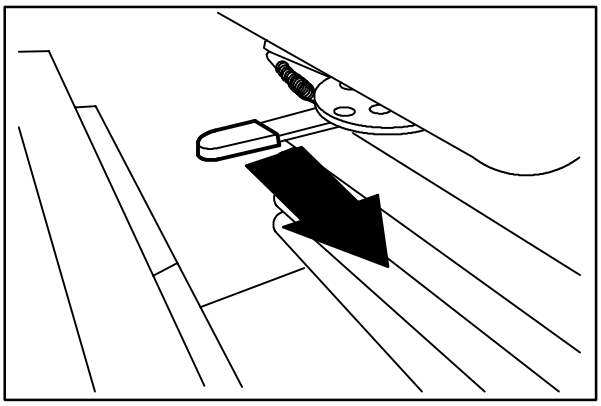

08443

The ride stiffness is adjusted with the stiffness knob.

Adjust: Turn the knob clockwise to increase the ride stiffness, and counter-clockwise to decrease the ride stiffness.

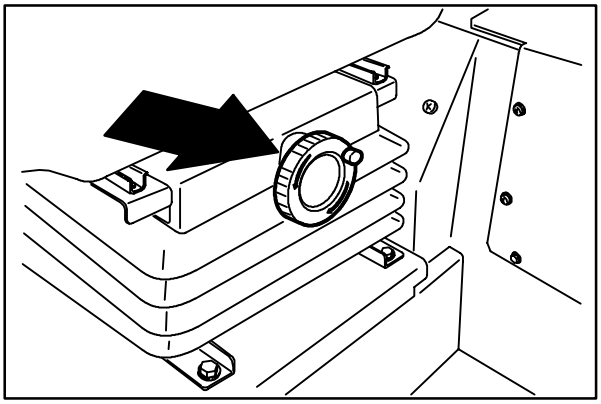

08444

Lift: Pull up on the seat mounting plate until the seat mount locks up.

Lower: Pull on the release lever and lower the seat mounting plate.

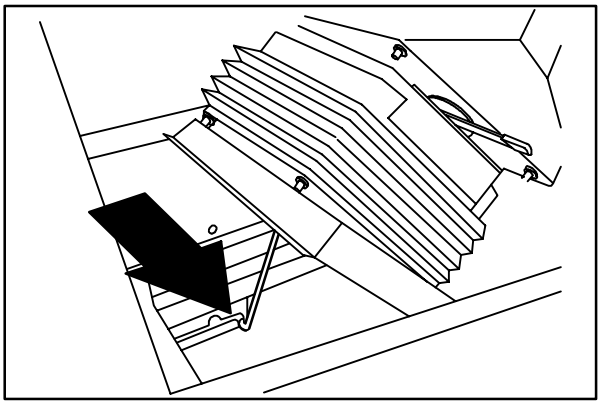

08445

HOPPER SUPPORT BAR

The hopper support bar is located on the operator's side of the hopper. The hopper support bar holds the hopper in the raised position to allow work under the hopper. DO NOT rely on the machine hydraulic system to keep the hopper raised.

WARNING: Raised hopper may fall. Engage hopper support bar.

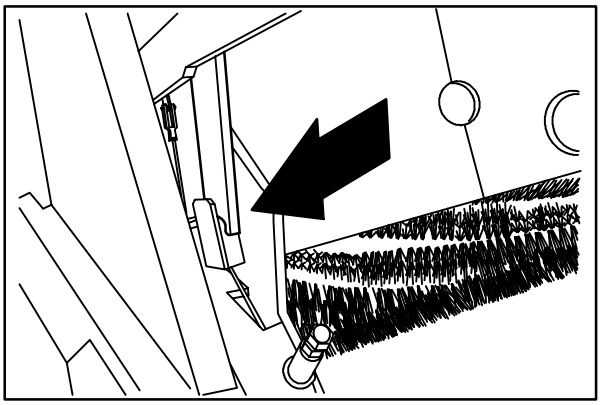

08446

WINDSHIELD WIPER SWITCH (OPTION)

The windshield wiper switch operates the windshield wiper on the cab option.

On: Pull out on the switch.

Off: Push in on the switch.

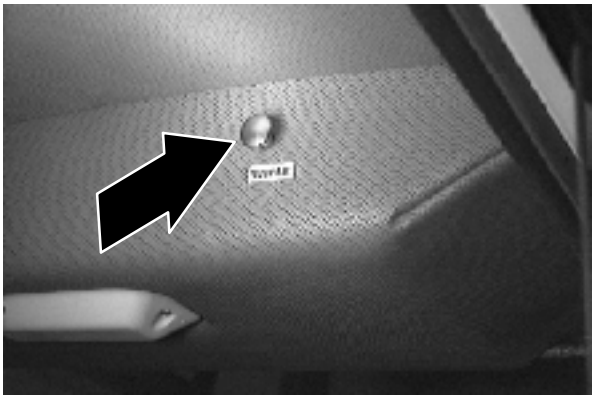

DOME LIGHT SWITCH (OPTION)

The dome light switch controls the dome light on the cab option.

On: Press on the switch.

Off: Press on the switch again.

HEATER KNOB (OPTION)

The heater knob controls the cab heater on the cab option. The heater knob is located above the parking brake lever.

On: Pull the knob out until the air temperature is at the desired comfort level. For maximum heat, pull the knob out all the way.

Off: Push the knob in all the way.

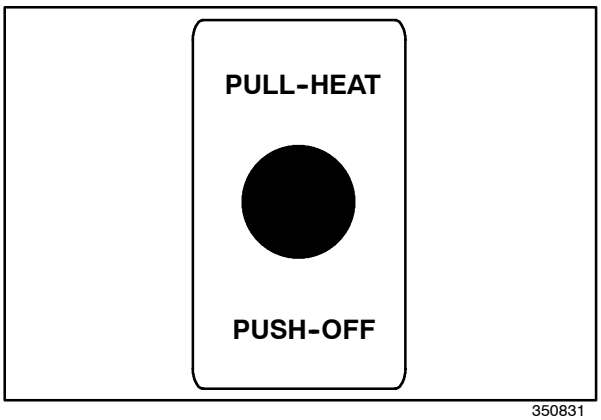

350831

FAN SPEED SWITCH (OPTION)

The fan speed switch controls the speed of the fan in the optional cab. The pressurizer can be set at three different speeds and into the **off** setting. The fan speed switch is located on the roof of the optional cab.

High: Turn the switch clockwise to the **high** setting.

Medium: Turn the switch clockwise to the **medium** setting.

Low: Turn the switch clockwise to the **low** setting.

Off: Turn the switch counter-clockwise to the **off** setting.

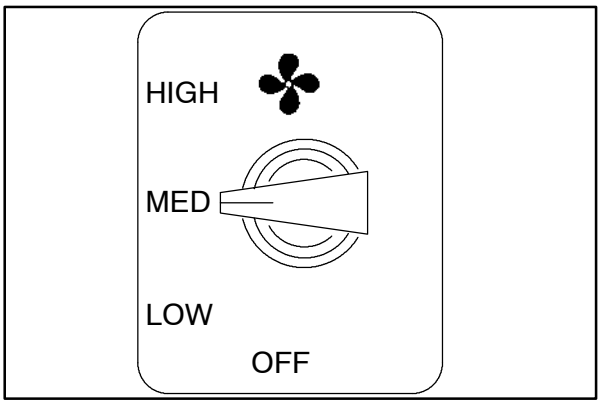

350832

AIR CONDITIONING SWITCH (OPTION)

The air conditioning switch operates the cab's air conditioner in the optional cab. The air conditioning switch is located on the roof of the optional cab.

On: Turn the switch clockwise until the air temperature is at the desired comfort level. For maximum cooling, turn the switch clockwise all the way to the maximum position.

Off: Turn the switch counter-clockwise all the way to the **off** position.

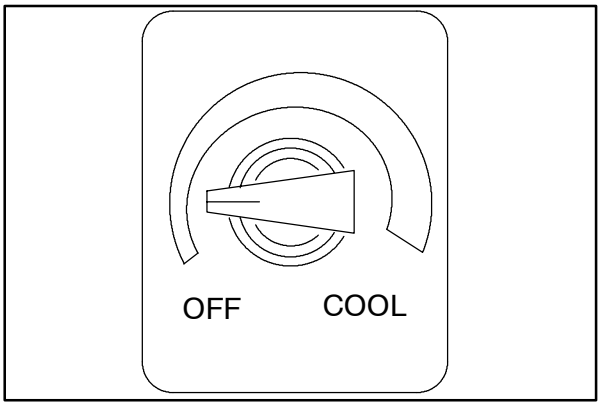

350833

AIR CONTROL VENTS (OPTION)

The air control vents control the direction of the air flow in an optional cab. Turn the vents until they meet your desired comfort level. For defrosting, direct the air control vents onto the windows. This creates warm, dry air which works best for defrosting. If this causes the windows to fog, turn on the air conditioner for drier air.

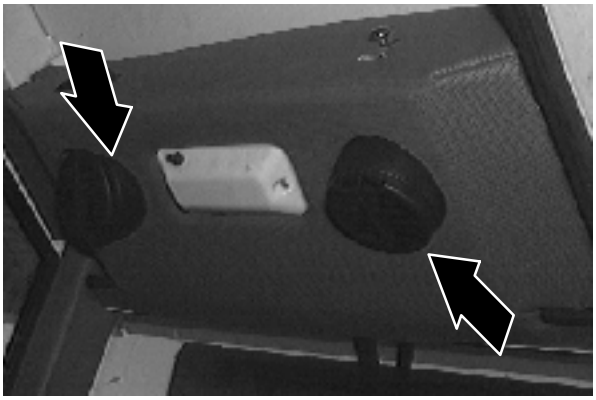

HOW THE MACHINE WORKS

The steering wheel controls the direction of machine travel. The directional pedal controls the speed and forward/reverse direction. The brake pedal slows and stops the machine.

The side brush sweeps debris into the path of the main brush. The main brush sweeps debris from the floor into the hopper. The vacuum system pulls dust and air through the hopper and the hopper dust filters.

When sweeping is finished, clean the hopper dust filter and empty the hopper.

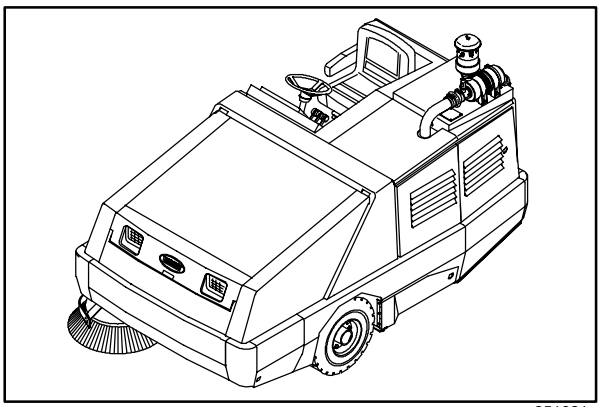

351081

PRE-OPERATION CHECKLIST

❑ Check under the machine for leaks (fuel, oil, coolant).

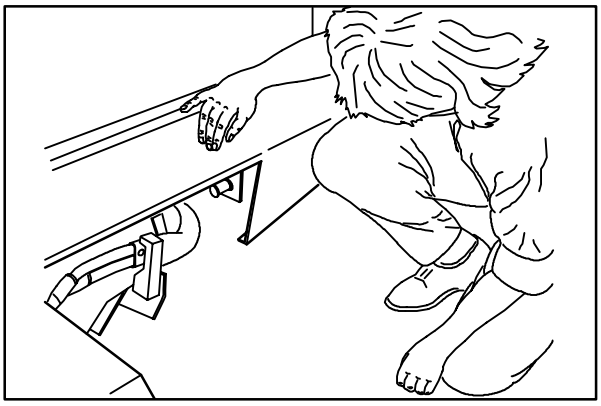

07807

❑ Check the engine air filter indicator.

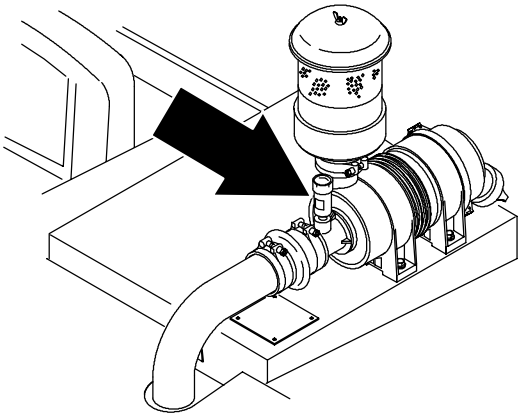

❑ Check the engine oil level.

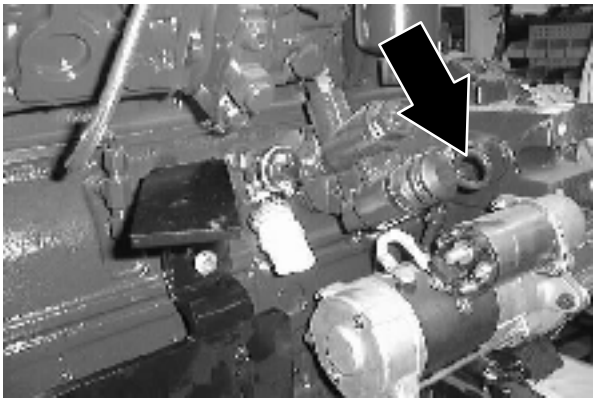

❑ Check fuel level.

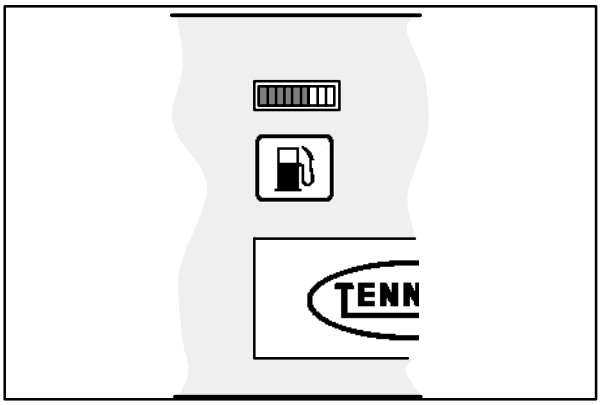

07764

❑ Check the brakes and steering for proper operation.

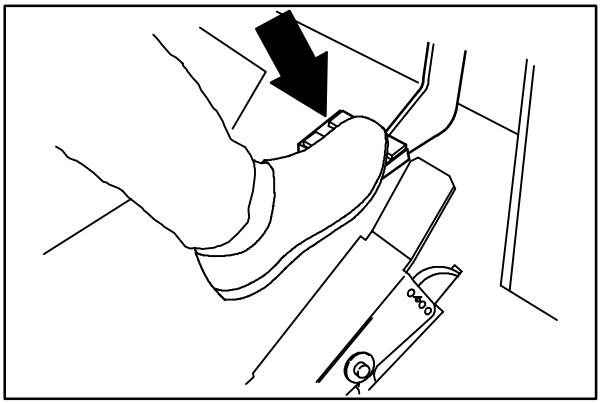

08471

STARTING THE MACHINE

1. You must be in the operator's seat with the directional pedal in neutral, and your foot on the brake pedal or with the parking brake set.

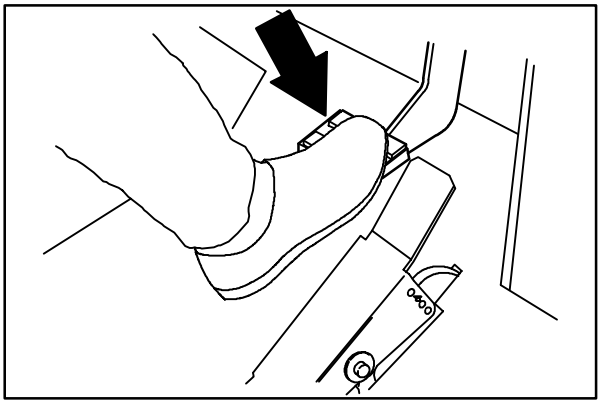

2. Turn the key counter-clockwise. The glow plugs light will come on. When the glow plug light goes out (5 to 15 seconds) the engine is ready to start.

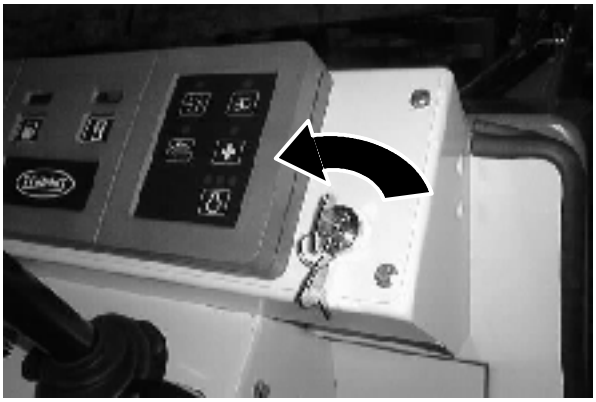

3. Turn the ignition switch key clockwise until the engine starts.

NOTE: Do not operate the starter motor for more than 10 seconds at a time or after the engine has started. Allow the starter to cool between starting attempt or damage to the starter motor may occur.

4. Allow the engine and hydraulic system to warm up three to five minutes.

WARNING: Engine emits toxic gases. Severe respiratory damage or asphyxiation can result. Provide adequate ventilation. Consult with your regulatory authorities for exposure limits. Keep engine properly tuned.

5. Release the machine parking brake.

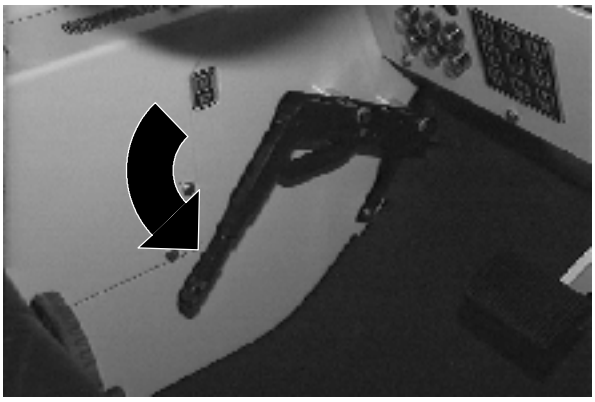

6. Fast: Pull the lever into the **Fast** position.

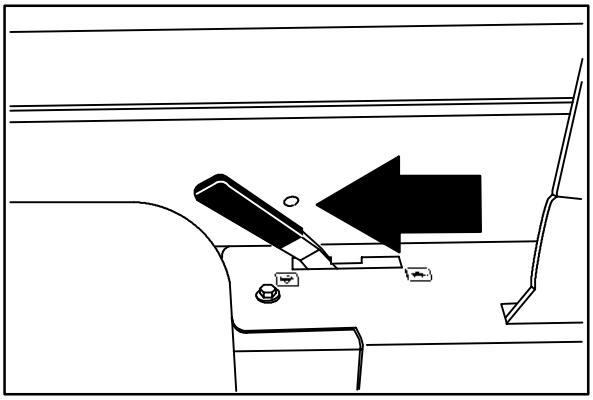

08456

7. Drive the machine to the area to be swept.

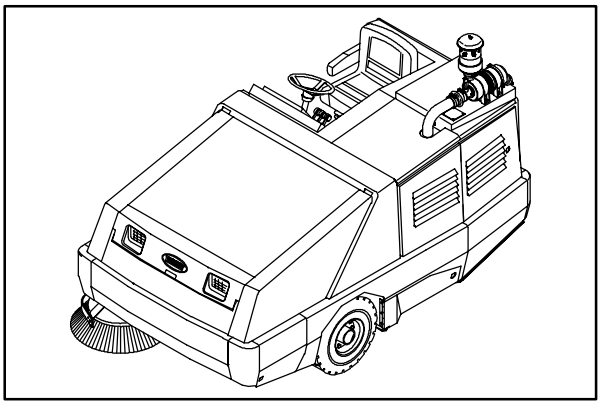

SWEEPING AND BRUSH INFORMATION

Pick up oversized debris before sweeping. Flatten or remove bulky cartons from aisles before sweeping. Pick up pieces of wire, twine, string, etc., which could become entangled in brush or brush plugs.

Plan the sweeping in advance. Try to arrange long runs with minimum stopping and starting. Sweep debris from very narrow aisles into main aisles ahead of time. Do an entire floor or section at one time. Sweep as straight a path as possible. Avoid bumping into posts or scraping the sides of the sweeper. Overlap the brush paths.

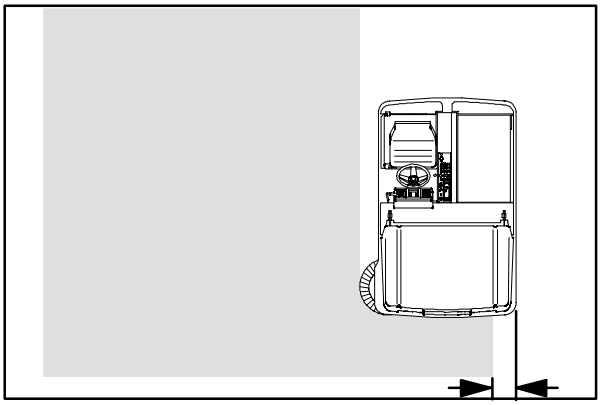

07817

Avoid turning the steering wheel too sharply when the machine is in motion. The machine is very responsive to the movement of the steering wheel. Avoid sudden turns, except in emergencies.

Use main brush **II Speed**™ when picking up light litter. This will improve both litter pickup and hopper loading. Do not use the **II Speed**™ speed in dusty environments. The machine can dust and clog the hopper dust filter. Operate the main brush in the **Normal** position when picking up general debris.

For best results, use the correct brush type for your sweeping application. The following are recommendations for main and side brush applications.

Polypropylene 8-double Row Main Brush – Gives superior pickup of sand, gravel, and paper litter. Retains its stiffness when wet, and can be used indoor or out. Not recommended for high-temperature debris.

Polypropylene and Wire 8-double Row Main Brush – The wire bristles loosen slightly packed soilage and heavier debris. The polypropylene bristles sweep up the debris with excellent hopper loading.

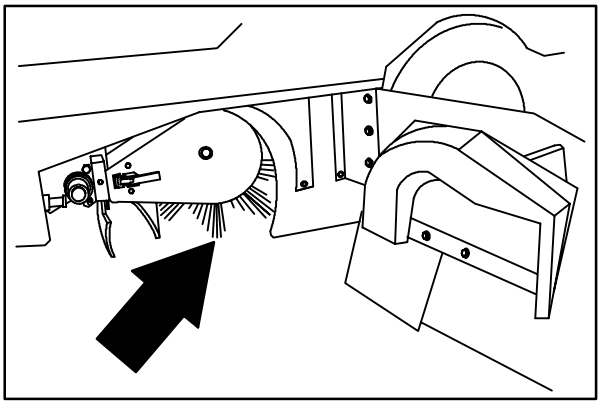

08587

Crinkle Wire 8-double Row Main Brush – The stiff wire bristles cut through compacted grime, hard to sweep dirt, and dirt mixed with oil, grease, or mud. This brush is recommended for foundry sweeping where heat may melt synthetic bristles. This brush has good hopper loading ability, but is not recommended for dusty applications.

Nylon 24-row Main Brush – Recommended for severe dust conditions on rough surfaces. This brush has excellent pickup and long life.

Nylon Patrol Main Brush – Designed for sweeping large indoor or outdoor areas at higher speed. The patrol pattern gives excellent loading of light bulky debris (leaves and paper), while the nylon bristle gives long life.

Heavy Gauge Polypropylene 8-double Row Main Brush – Designed for sweeping outdoor areas. The stiffer bristles allow excellent loading of heavier bulky debris (leaves and paper litter).

Polypropylene Side Brush – A good general purpose brush for sweeping of light to medium debris in both indoor and outdoor applications. This brush is recommended when bristles may get wet.

Nylon Side Brush – A longer life, general purpose brush that is recommended for rough surfaces.

Flat Wire Side Brush – Recommended for outside and curb-side sweeping where soilage is heavy or compacted. The stiff wire bristles dig out soilage. This brush is also recommended for foundry sweeping where heat may melt synthetic bristles.

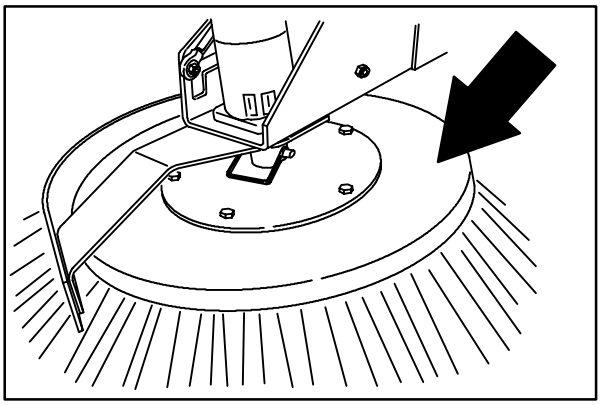

08588

SWEEPING

1. Select **Fast** engine speed.

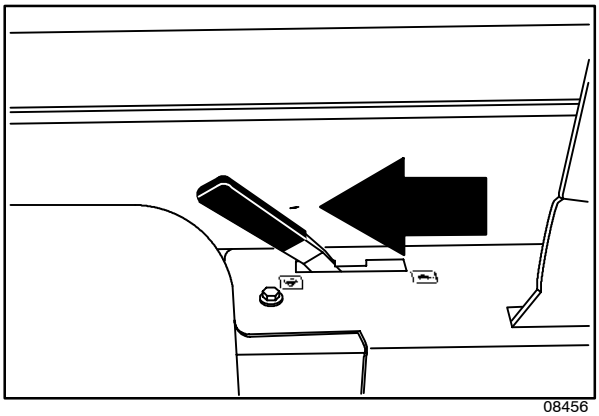

08456

2. The hopper door has to be closed during sweeping. If your machine has the hopper door light option, make sure the hopper door light is off. If the hopper door light is on, close the hopper door.

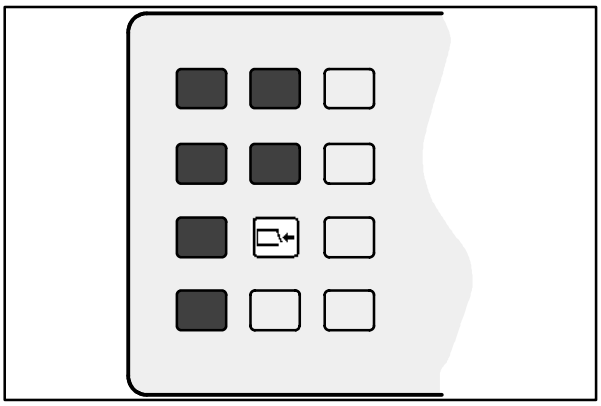

07763

3. Place the main brush switch in the **Normal** or **II Speed**™ position.

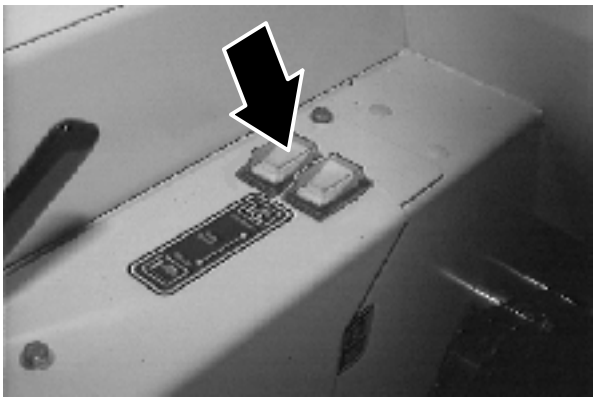

4. Push the top of the side brush switch into the **On**/**Down** position.

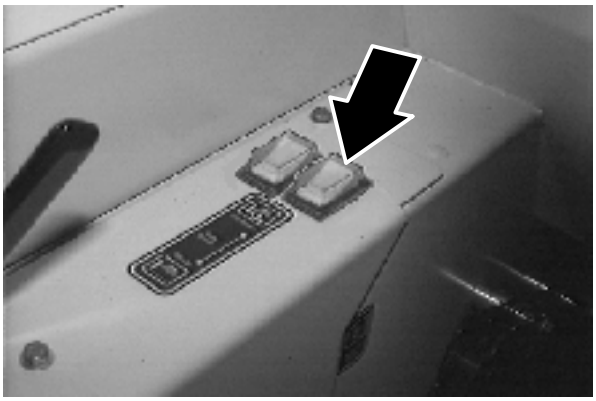

5. Press the vacuum fan switch to start the vacuum.

6. Sweep as needed.

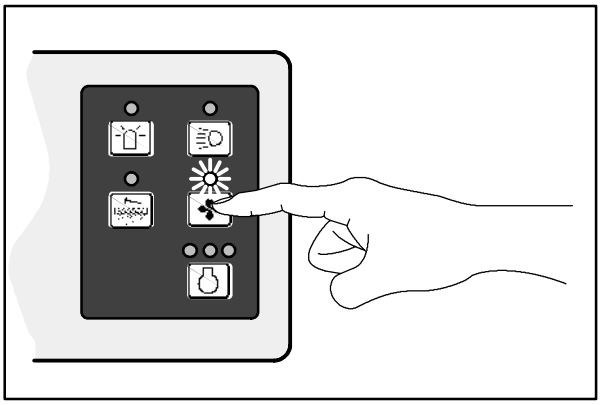

07769

STOP SWEEPING

1. Push the bottom of the side brush switch into the **Off**/**Up** position.

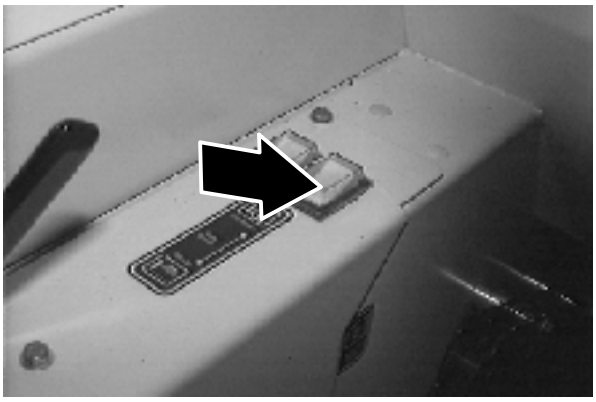

2. Place the main brush switch in the middle **Off** position.

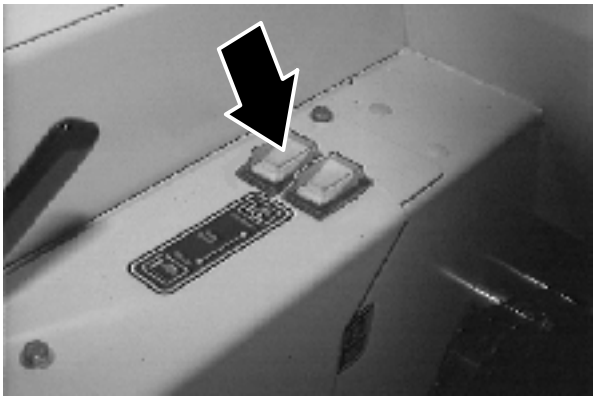

3. Press the filter shaker switch to shake the hopper dust filter.

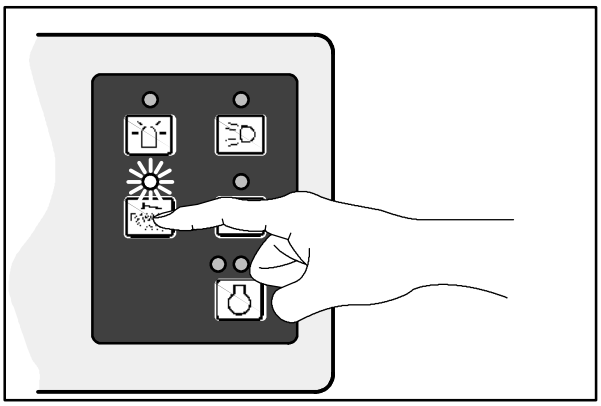

07767

EMPTYING THE HOPPER

1. Slowly drive the machine to the debris site or debris container.

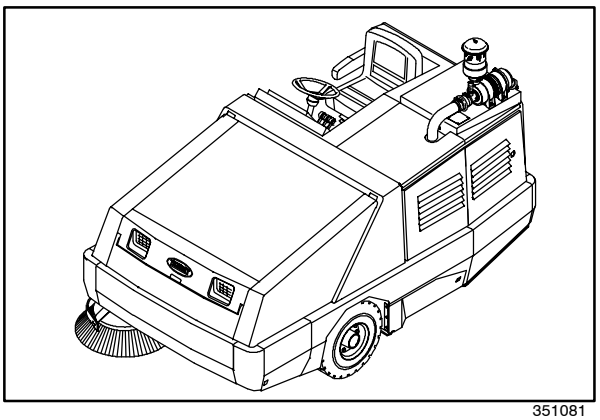

351081

2. Pull and hold the hopper lift lever in the **Up** position and raise the hopper to the desired height.

   FOR SAFETY: When using machine, make sure adequate clearance is available before raising hopper.

NOTE: Be aware that the minimum ceiling height needed to high dump the hopper is 3355 mm (11 ft).

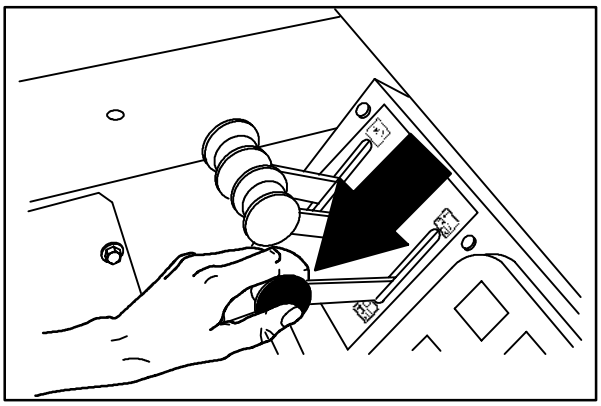

08480

3. Release the hopper lift lever up and into the middle (Hold) position.

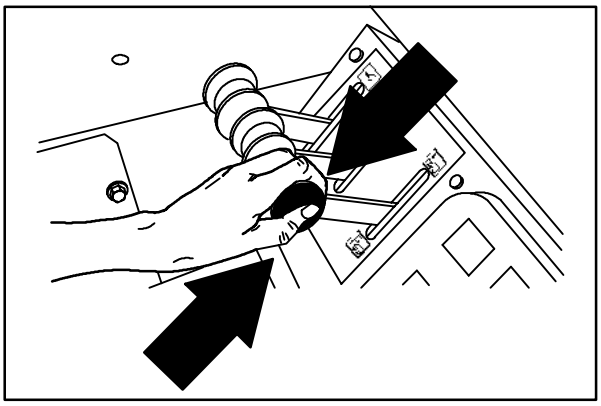

08481

4. Drive the machine up to the debris container.

   FOR SAFETY: When using machine, move machine with care when hopper is raised.

5. Pull and hold the hopper rollout lever into the **Out** position.

6. Lower the hopper into the debris container to control dust.

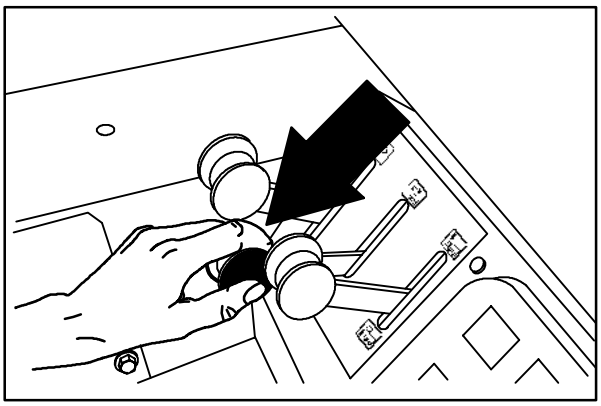

08477

7. Pull and hold the hopper door lever into the **Open** position.

8. Raise the hopper enough and/or close the hopper door to clear the top of the debris container.

9. Slowly back the machine away from the debris site or debris container.

   FOR SAFETY: When using machine, move machine with care when hopper is raised.

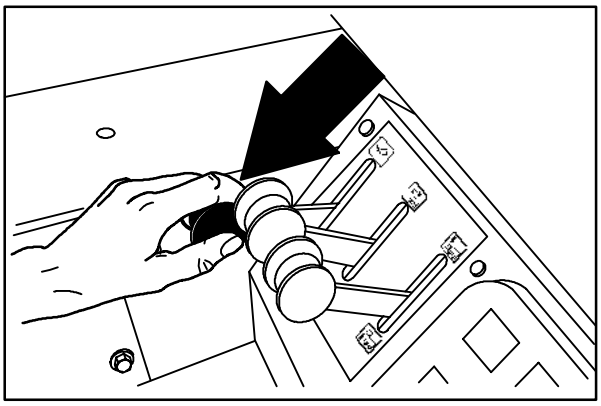

08474

10. Push and hold the hopper door lever into the **Close** position.

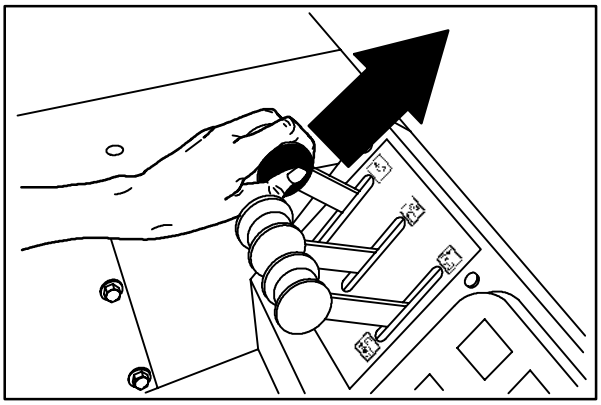

08476

11. Push and hold the hopper rollout lever into the **In** position.

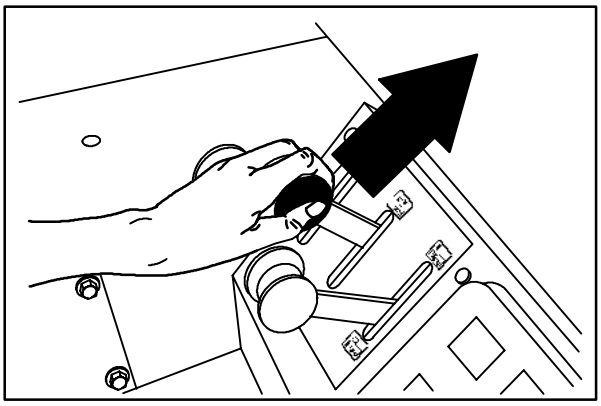

08479

12. Push and hold the hopper lift lever in the **Down** position.

NOTE: The hopper lift lever, hopper rollout lever, and the hopper door lever can be use together to lift the hopper, rollout the hopper, and open the hopper door.

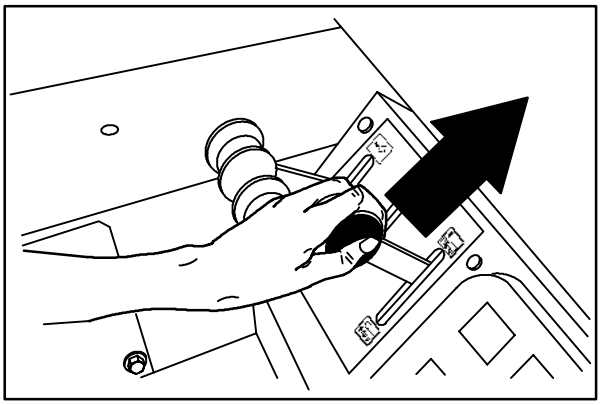

08482

STOP THE MACHINE

1. Stop sweeping.

2. Take your foot off the directional pedal. Step on the brake pedal.

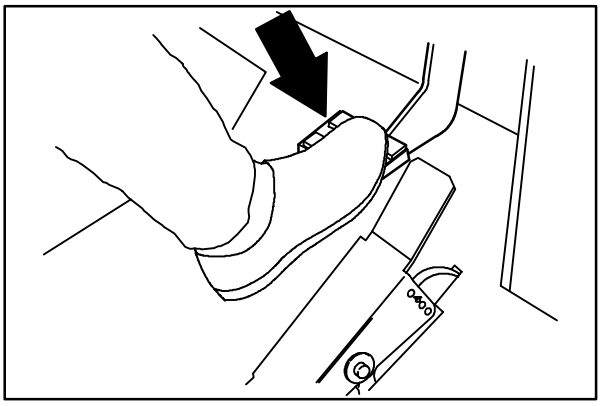

08471

3. Set the machine parking brake.

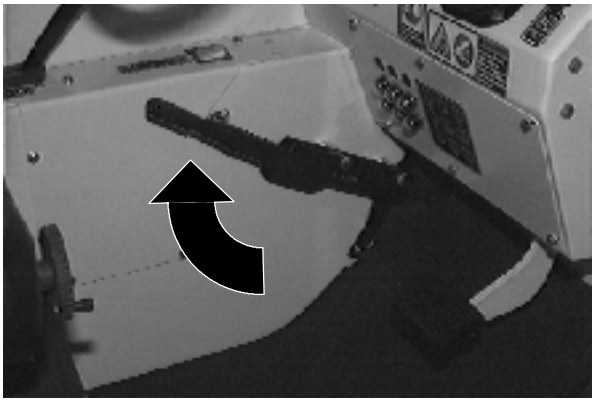

4. Turn the ignition switch key counter-clockwise to stop the engine. Remove the switch key.

   FOR SAFETY: Before leaving or servicing machine; stop on level surface, set parking brake, turn off machine and remove key.

POST-OPERATION CHECKLIST

- ❑ Check the brushes adjustment. See *TO CHECK AND ADJUST MAIN BRUSH PATTERN* and *SIDE BRUSH* in *MAINTENANCE*.
- ❑ Check the brush skirts for damage, wear, and adjustment.

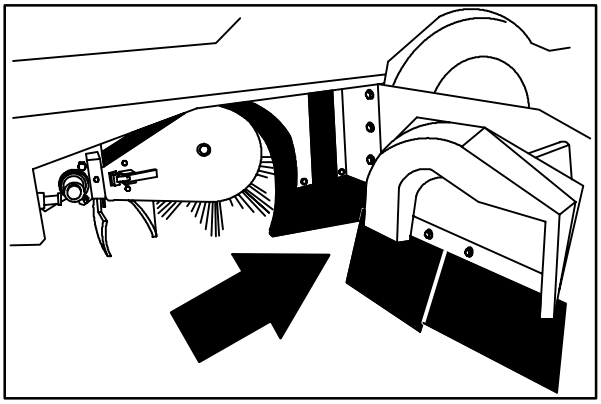

08493

- ❑ Check for wire or string tangled on the main and side brushes.

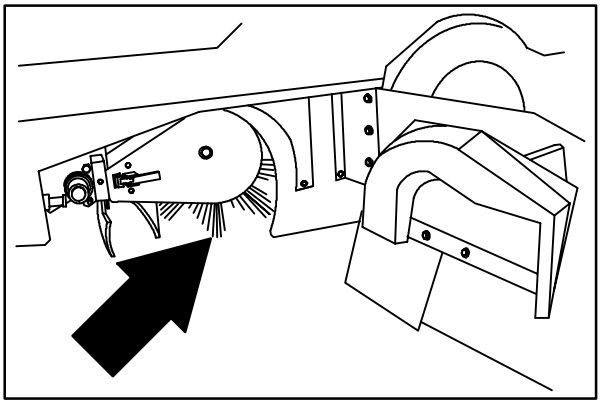

08587

- ❑ Check for fuel odor that indicates a fuel leak.
- ❑ Check under the machine for leak spots (fuel, oil, coolant).
- ❑ Check the service records to determine maintenance requirements.

ENGAGING HOPPER SUPPORT BAR

1. Set the machine parking brake.

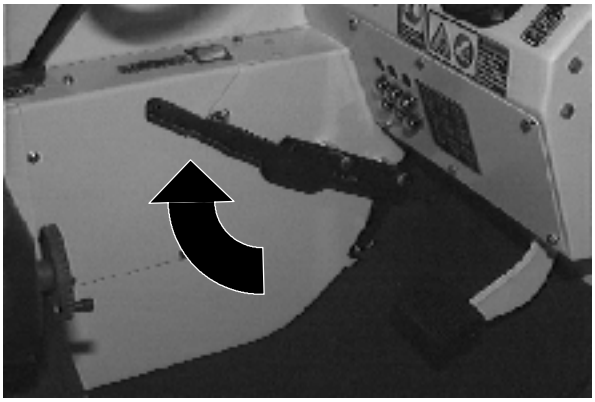

2. Start the engine.

3. Raise the hopper all the way up.

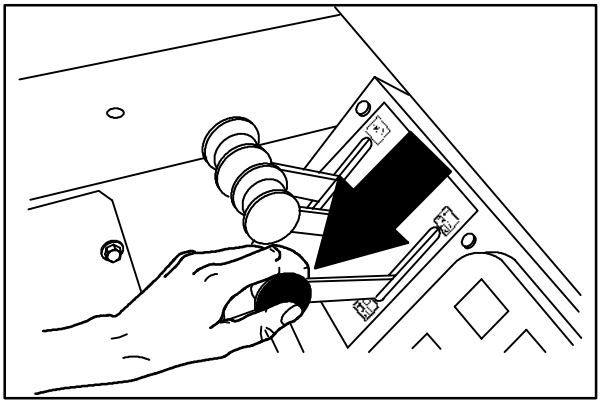

08480

4. Remove the support bar from the storage clip.

WARNING: Raised hopper may fall. Engage hopper support bar.

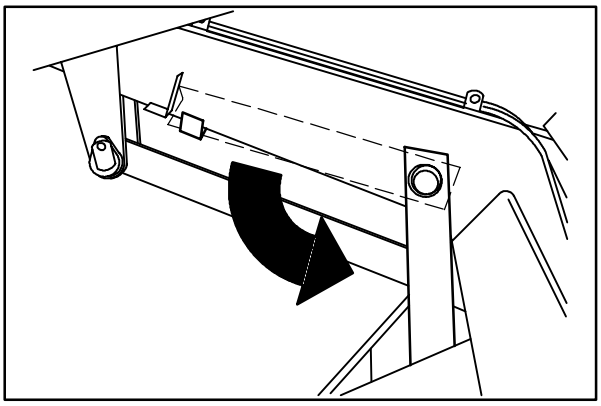

08589

5. Slowly lower the hopper so the support bar rests on the bar stop on the machine frame.

WARNING: Lift arm pinch point. Stay clear of hopper lift arms.

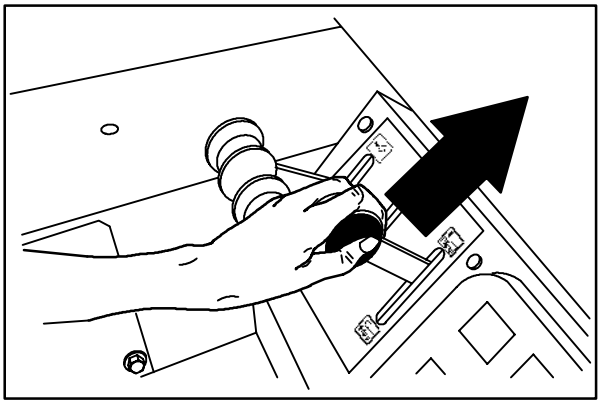

08482

6. Shut the engine off.

DISENGAGING HOPPER SUPPORT BAR

1. Start the engine.

2. Raise the hopper slightly to release the hopper support bar.

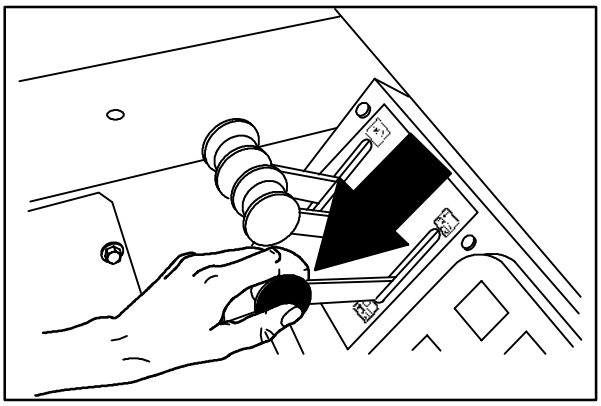

08480

3. Put the hopper support bar in the storage clip.

WARNING: Lift arm pinch point. Stay clear of hopper lift arms.

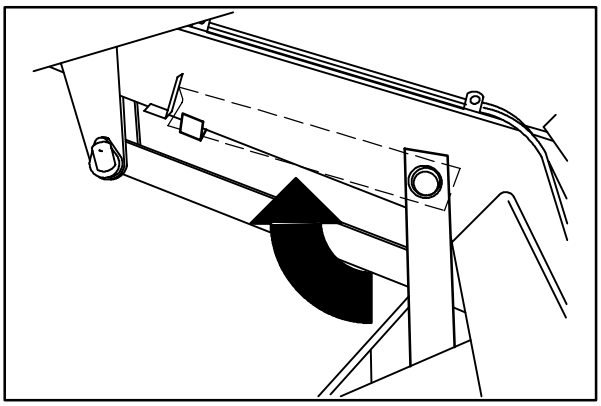

08590

4. Lower the hopper.

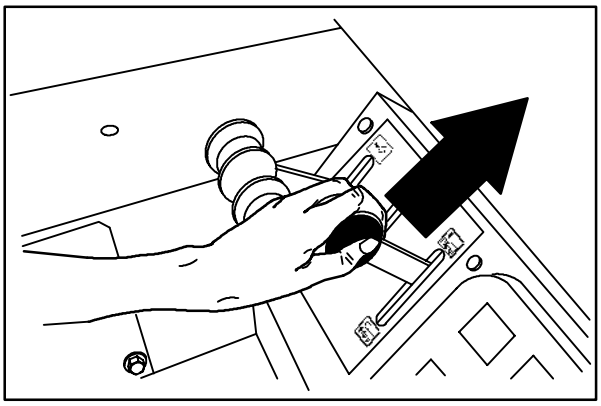

08482

5. Shut the engine off.

OPERATION ON INCLINES

Drive the machine slowly on inclines. Use the brake pedal to control machine speed on descending inclines.

The maximum rated incline is 8.5°.

FOR SAFETY: When using machine, move machine with care when hopper is raised.

OPTIONS

VACUUM WAND

The vacuum wand uses the machine's vacuum system. The vacuum hose and wand allow pick-up of debris that is out of reach of the machine.

1. Stop the machine within reach of the area to be vacuumed and set the machine parking brake.

2. Turn off the vacuum fan by pressing the vacuum fan switch. The indicator light above the switch will go off.

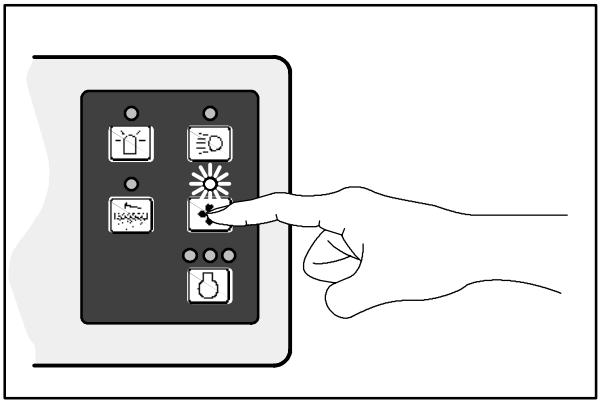

07769

3. Turn off and lift the main brush by placing the switch in the middle **Off** position.

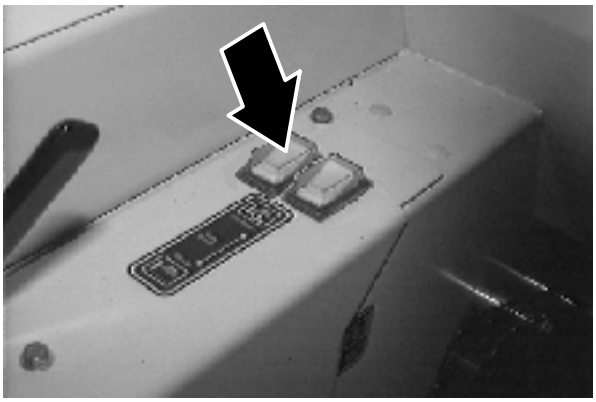

4. Turn off and lift the side brush(es) by placing the bottom of the switch(es) into the **Off**/**Up** position.

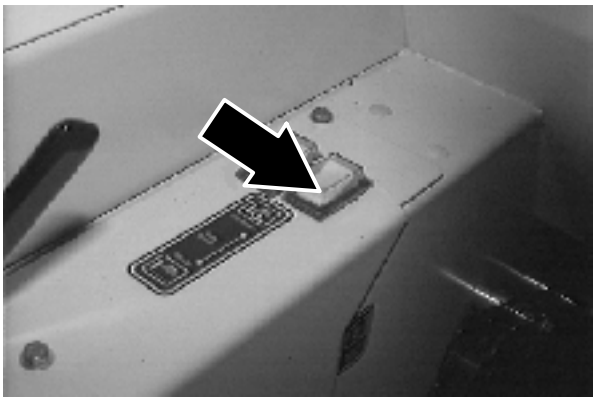

5. Open the forward hopper access door and engage the lift arm.

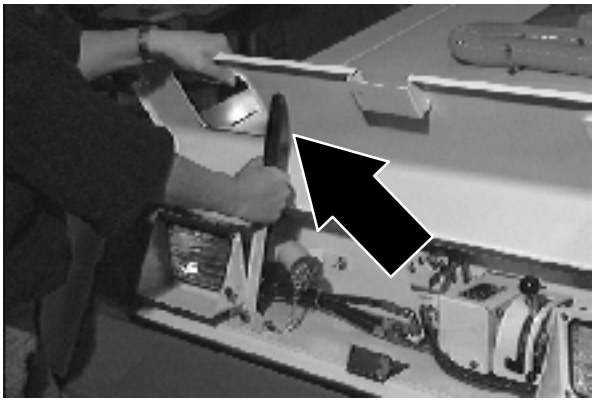

6. Remove the vacuum plug from the vacuum adaptor tube in front of the hopper.

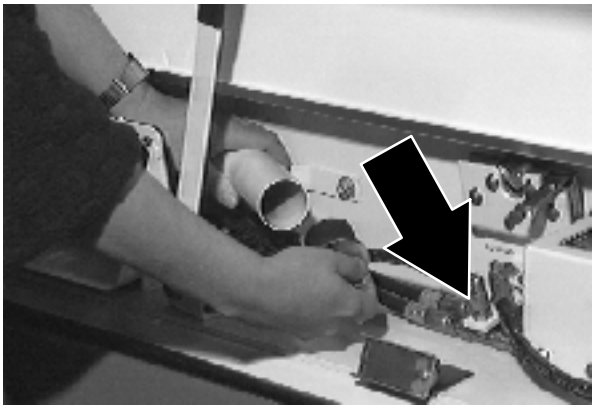

7. Remove the vacuum wand and hose from the mounting clips and assemble them together.

8. Connect the vacuum hose to the vacuum adaptor tube in front of the hopper.

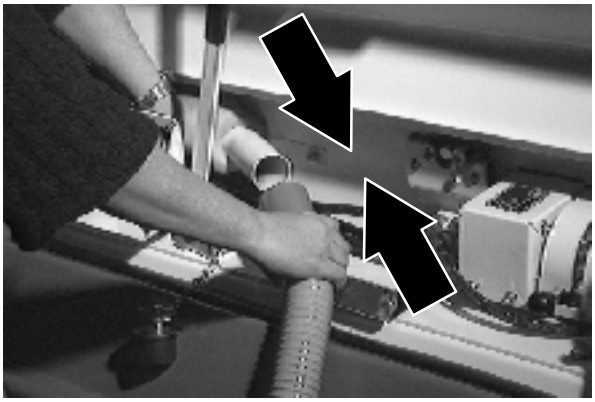

9. Close the vacuum door by sliding the vacuum door lever down and to the left into the locked position.

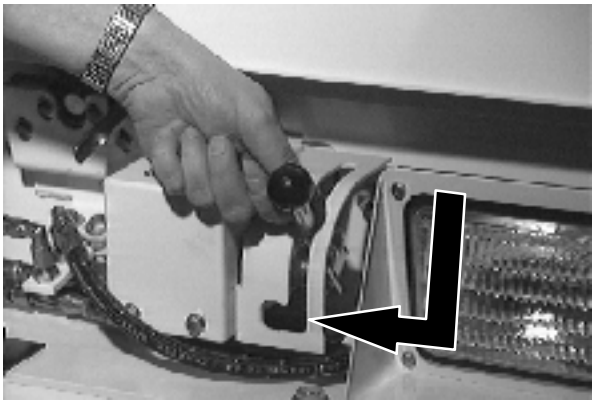

10. Turn on the vacuum fan by pressing the vacuum fan switch. The indicator light above the switch will go on.

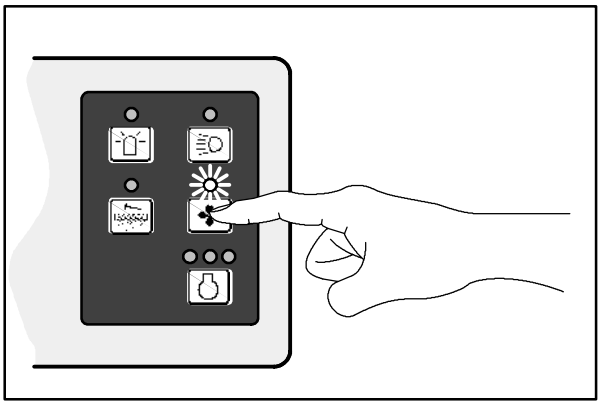

07769

11. Vacuum the area as needed.

12. When done vacuuming, turn off the vacuum fan by pressing the vacuum fan switch. The indicator light above the switch will go off.

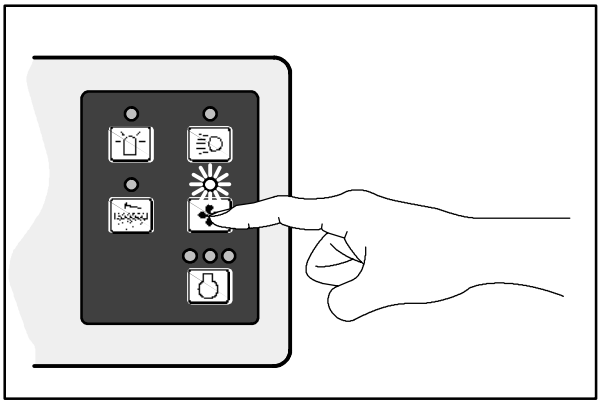

07769

13. Open the vacuum door by sliding the vacuum door lever to the right and up from the locked position.

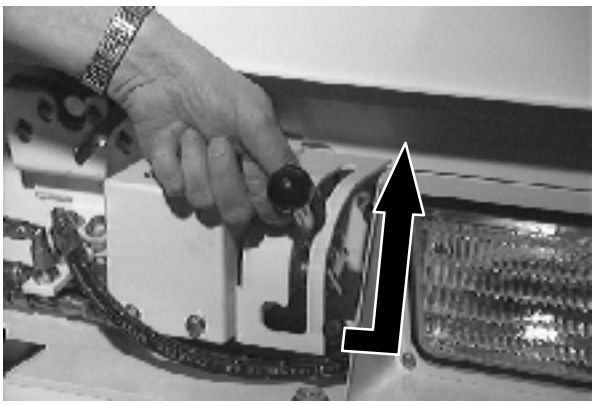

14. Disconnect the vacuum hose from the vacuum adaptor tube in front of the hopper.

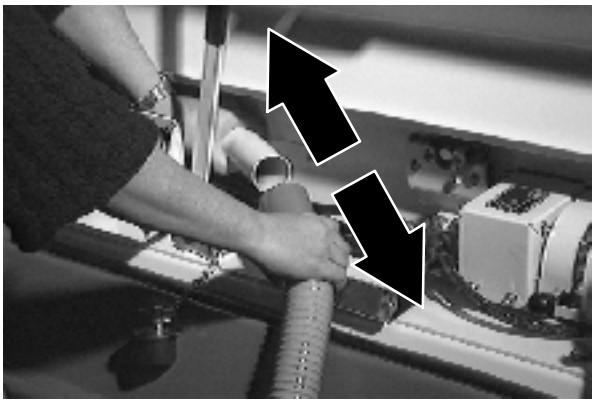

15. Disassemble the vacuum hose assembly and place back onto the hopper in the mounting clips.

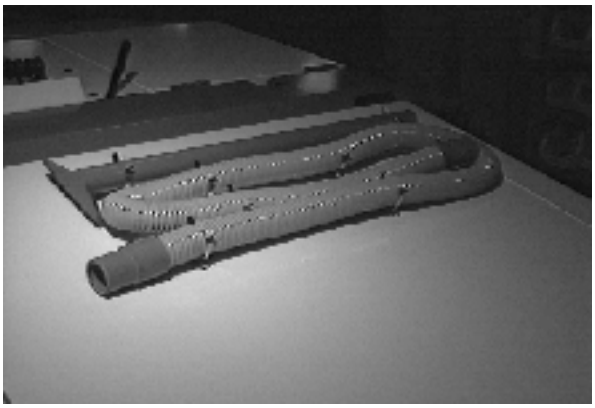

16. Replace the vacuum plug into the vacuum adaptor tube in front of the hopper, disengage the lift arm and close the forward hopper access door.

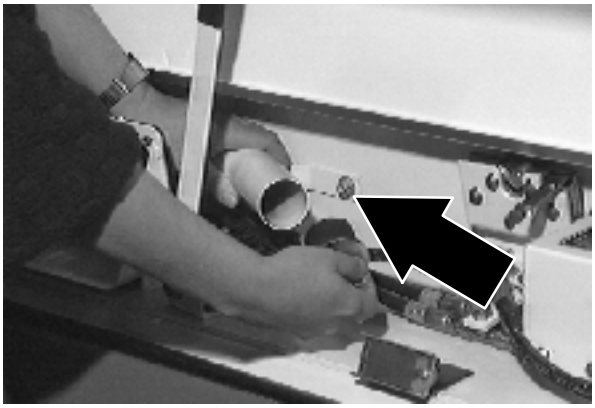

REGENERATIVE FILTER SYSTEM (RFS)

The Regenerative Filter System (RFS) is an option that alternately turns on the filter shaker motors when the filters need cleaning because of a build-up of dust or debris.

Normally the RFS does not require the operator to stop the machine to shake the filters during sweeping operation (except in extreme and severe dust environments). However, it is recommended that the filters are shaken at the operator's initiative each time the hopper is dumped. This can be accomplished during transit to a dump sight. *AVOID* shaking the filters while hopper is in a rolled out position. To initiate a shaking cycle, press the filter button on the instrument panel. See *FILTER SHAKER SWITCH.*

In very severe dust environments, the plugged filter indicator on the instrument panel may remain lit. When this occurs, it is recommended that the operator stop the machine and initiate one or two shake cycles to clear a possible plugged filter condition. After shaking, roll the hopper out to evacuate the dust tray. Resume sweeping operation.

If the hopper is over full, the light may come on. Check the hopper load and dump if necessary.

If the filter light remains on after all the above conditions are corrected, the filters may be plugged or the RFS may be inoperative. Filters may be shaken by the operator initiative by pressing the filter button on the instrument panel if there is a failure in the RFS control system.

Successful operation of the RFS option requires clean, undamaged filters. Plugged filters may cause the RFS to cycle continuously even at start up. The option also requires good sealing of the upper lid to the hopper, as well as a good seal between the two upper filter chambers.

It is recommended that the machine be driven for some test sweeping with the RFS option at initial start up. This next step assumes the hopper cover and upper filter chamber of the hopper was cleaned thoroughly prior to installation of the RFS option. Sweep for 30 minutes and open the hopper cover to check the integrity of the seals. Look at the top of the shaker panels and the underside of the hopper cover. Check for any signs of *dust tracking* that may be caused by a bad seal or filter. Repair a necessary. Perform this check periodically while using the sweeper with the RFS option.

MACHINE TROUBLESHOOTING

Problem	Cause	Remedy
Excessive dusting	Brush skirts and dust seals worn, damaged, out of adjustment	Replace or adjust brush skirts or dust seals
	Hopper dust filter clogged	Shake and/or clean or replace dust filter
	Main brush operating in **II Speed**™	Operate main brush in **Normal** speed
	Vacuum hose damaged	Replace vacuum hose
	Vacuum fan seal (vacuum fan inlet bracket) damaged	Replace seal
	Vacuum fan failure	Contact TENNANT service personnel
	Hopper door partially or completely closed	Open the hopper door
	Thermo Sentry™ tripped	Reset Thermo Sentry™
	Fabric presceen missing on dust filters	Clean filter elements and install fabric prescreen
Poor sweeping performance	Brush bristles worn	Replace brushes
	Main and side brushes not adjusted properly	Adjust main and side brushes
	Debris caught in main brush drive mechanism	Free drive mechanism of debris
	Main brush drive failure	Contact TENNANT service personnel
	Side brush drive failure	Contact TENNANT service personnel
	Hopper full	Empty hopper
	Hopper floor skirts worn or damaged	Replace floor skirts
	Hopper door partially or completely open	Close the hopper door
	Wrong sweeping brush	Contact TENNANT representative for recommendations

MAINTENANCE

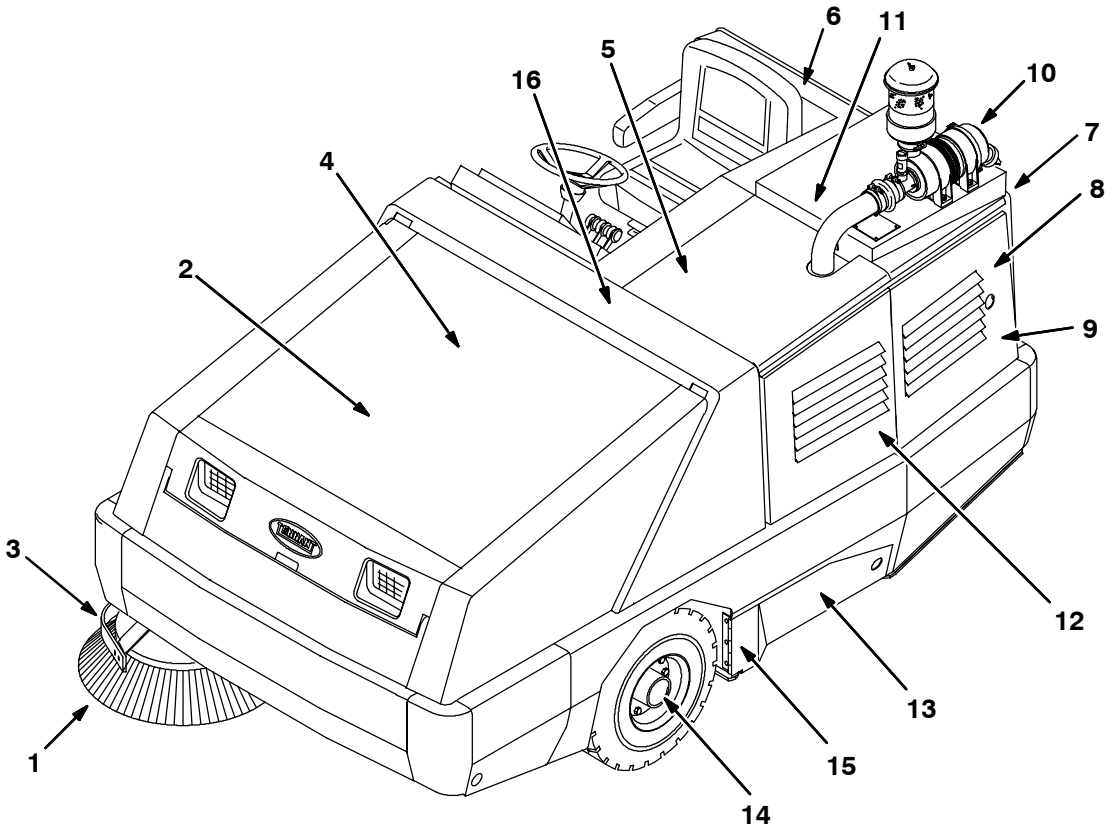

353232

MAINTENANCE CHART

Interval	Key	Description	Procedure	Lubricant/ Fluid	No. of Service Points
Daily	10	Engine air filter	Check indicator	–	1
			Empty dust cap	–	1
	12	Engine crankcase	Check oil level	EO	1
	13	Brush compartment skirts	Check for damage, wear, and adjustment	–	6
	15	Hopper lip skirts	Check for damage, wear, and adjustment	–	3
	13	Main brush	Check for damage, wear, and adjustment	–	1
			Check brush pattern	–	1
	1	Side brush	Check for damage, wear, and adjustment	–	1
			Check brush pattern	–	1
	2	Hopper dust filter	Shake	–	2
50 Hours	13	Main brush	Rotate end-for-end	–	1
	2	Hopper dust filter	Check or clean	–	2
	12	Fuel lines	Check for wear and leaks	–	1
	16	Main brush adjustment	Lubricate	SPL	1

Interval	Key	Description	Procedure	Lubricant/ Fluid	No. of Service Points
100 Hours	6	Hydraulic fluid reservoir	Check fluid level	HYDO	1
	7	Hydraulic fluid cooler	Clean cooler fins		1
	8	Radiator	Clean core exterior		1
			Check coolant level	WG	1
			Clean screen	–	1
	–	Tires	Check pressure	–	3
	13	Main brush & hopper seals	Check for damage or wear	–	12
	12	Engine crankcase	■ Change oil and filter element	EO	1
	12	Engine fan belt	■ Check tension	–	1
	12	Air cond. belt (option)	Check tension	–	1
	–	Air cond. filter (option)	Clean or replace if necessary	–	1
200 Hours	12	Engine	Steam clean exterior	–	1
	8	Radiator hoses and clamps	Check for tightness and wear	–	2
	11	Rear wheel support bearings	Lubricate	SPL	2
	5	Parking brake	Check adjustment	–	1
	3	Side brush pivot pins	Lubricate	SPL	1
400 Hours	12	Fuel filter, Engine	Replace	–	1
	12	Water separator / fuel filter	Replace	–	1
	8	Cooling system	Flush	WG	1
	4	Brake master cylinder	Check fluid level	BF	1
800 Hours	6	Hydraulic reservoir	Replace filler cap	GL	
			Replace suction strainer	GL	1
			Change hydraulic fluid	HYDO	1
	9	Hydraulic fluid filter	■ Change filter element	–	1
	9	Hydraulic hoses	Check for wear and damage	–	49
	11	Propelling motor	■ Torque shaft nut	–	1
	–	Rear wheel	■ Torque wheel nuts	–	1
	16	Battery	■ Clean and tighten battery cable connections	–	1
1600 Hours	14	Front wheel bearings	Check, lubricate, and adjust	SPL	2

LUBRICANT/FLUID

BF . . . . Brake fluid
EO . . . . Engine oil, 15W40 Cummins Valoline diesel
HYDO . Tennant Company or approved hydraulic fluid
SPL . . . Special lubricant, Lubriplate EMB grease (TENNANT part no. 01433–1)
WG . . . Water and permanent-type ethylene glycol anti-freeze, –34° C (–30° F)
NOTE: Also check procedures indicted (■) after the first 50-hours of operation.

LUBRICATION

ENGINE

Check the engine oil level daily. Change the engine oil and oil filter after the first 50 hours of machine operation, and then every 100 hours of operation. Use 15W40 Cummins Valvoline oil.

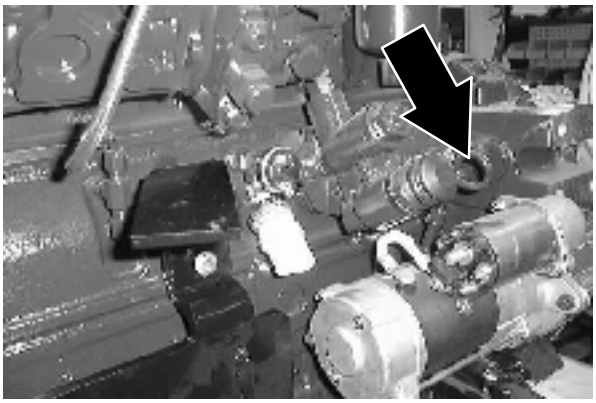

The engine oil drain is located on the engine oil pan. Drain the engine oil when it is warm.

Fill the engine with oil to the level indicated on the oil dipstick. The engine oil capacity is 11.3 L (12 qt) including the oil filter.

REAR WHEEL SUPPORT

The rear wheel support pivots the rear wheel. The support has one grease fitting for the bearings. The rear wheel support bearings must be lubricated every 200 hours of operation. Use Lubriplate EMB grease (TENNANT part no. 01433–1).

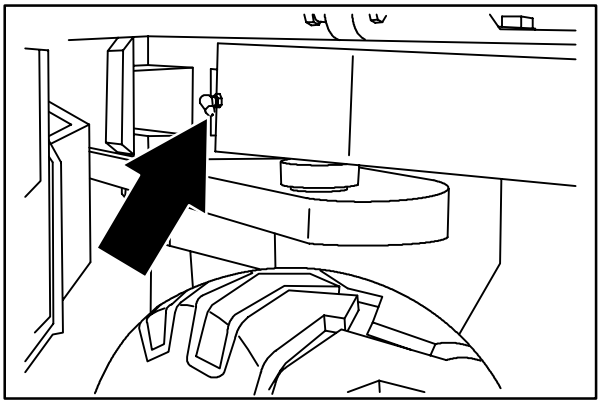

08451

FRONT WHEEL BEARINGS

Inspect the front wheel bearings for seal damage, and repack and adjust every 1600 hours of operation. Use Lubriplate EMB grease (TENNANT part no. 01433–1).

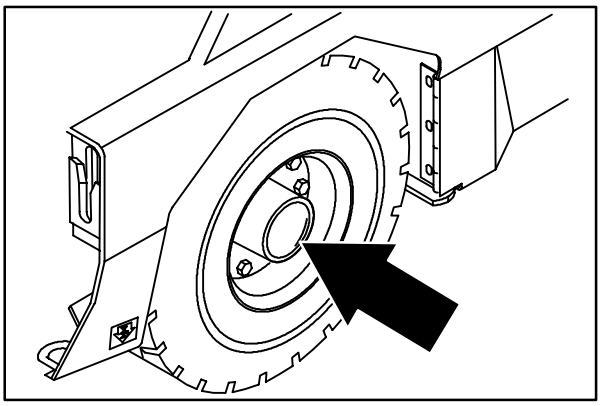

08579

SIDE BRUSH PIVOT PINS

The side brush pivot pins should be lubricated with Lubriplate EMB grease (TENNANT part no. 01433–1) every 200 hours of operation.

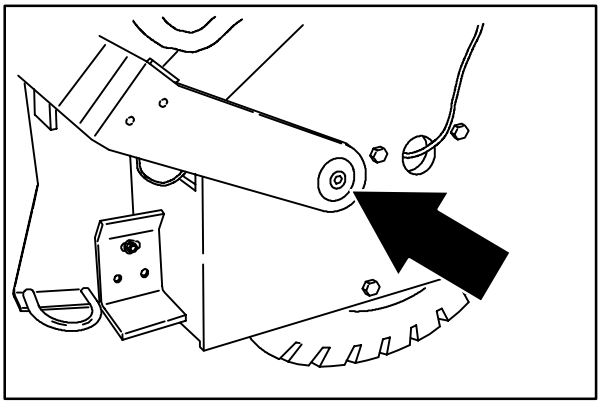

08581

MAIN BRUSH ADJUSTMENT

The main brush adjustment, located on the right side of the main brush, has one grease fitting for lubrication. Lubricate the main brush adjustment every 50 hours of operation with Lubriplate EMB grease (TENNANT part no. 01433–1).

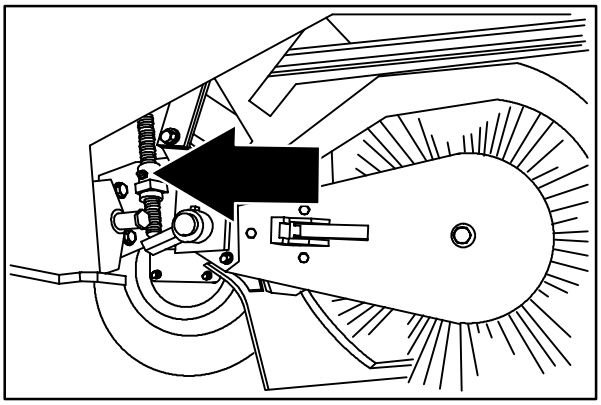

08934

HYDRAULICS

HYDRAULIC FLUID RESERVOIR

The reservoir is located behind the operator seat.

Mounted on top of the reservoir is a filler cap with a built-in breather. Replace the cap every 800 hours of operation.

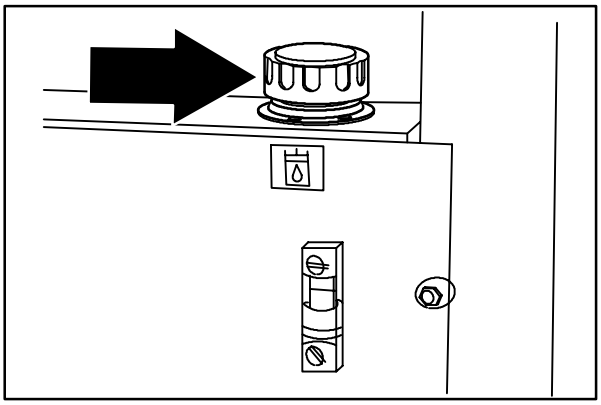

08452

Check the hydraulic fluid level at operating temperature every 100 hours of operation. Make sure the hopper is down when checking hydraulic fluid level. The sight gauge is marked with FULL (black line) and ADD (red line) levels to indicate the level of hydraulic fluid in the reservoir.

Lubricate the filler cap gasket with a film of hydraulic fluid before putting the cap back on the reservoir.

ATTENTION! Do not overfill the hydraulic fluid reservoir or operate the machine with a low level of hydraulic fluid in the reservoir. Damage to the machine hydraulic system may result.

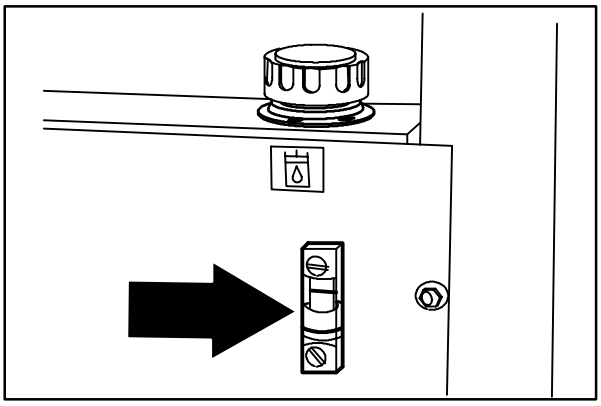

08430

Drain and refill the hydraulic fluid reservoir with new hydraulic fluid every 800 hours of operation.

The hydraulic fluid filter is located in the engine compartment.

Replace the filter element every 800 hours of operation.

The reservoir has a built-in strainer outlet that filters hydraulic fluid before it enters the system. Replace the strainer every 800 hours of operation.

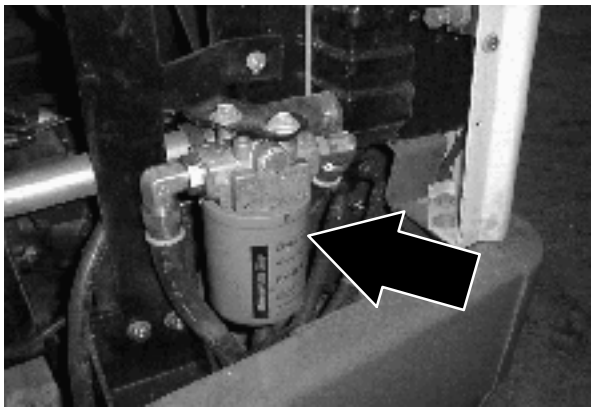

HYDRAULIC FLUID

The quality and condition of the hydraulic fluid play a very important role in how well the machine operates. TENNANT's hydraulic fluid is specially selected to meet the needs of TENNANT machines.

TENNANT's hydraulic fluids provide a longer life for the hydraulic components. There are two fluids available for different temperature ranges:

TENNANT part no.	Ambient Temperature
65869	above 7° C (45° F)
65870	below 7° C (45° F)

The higher temperature fluid has a higher viscosity and should not be used at the lower temperatures. Damage to the hydraulic pumps may occur because of improper lubrication.

The lower temperature fluid is a thinner fluid for colder temperatures.

If another hydraulic fluid is used, make sure the specifications match TENNANT's hydraulic fluid specifications. Using substitute fluids can cause premature failure of hydraulic components.

European marketed machines are filled with locally available hydraulic fluids. Check the label on the hydraulic fluid reservoir.

ATTENTION! Hydraulic components depend on system hydraulic fluid for internal lubrication. Malfunctions, accelerated wear, and damage will result if dirt or other contaminants enter the hydraulic system.

HYDRAULIC HOSES

Check the hydraulic hoses every 800 hours of operation for wear or damage.

Fluid escaping at high pressure from a very small hole can be almost invisible, and can cause serious injuries.

See a doctor at once if injury results from escaping hydraulic fluid. Serious infection or reaction can develop if proper medical treatment is not given immediately.

FOR SAFETY: When servicing machine, use cardboard to locate leaking hydraulic fluid under pressure.

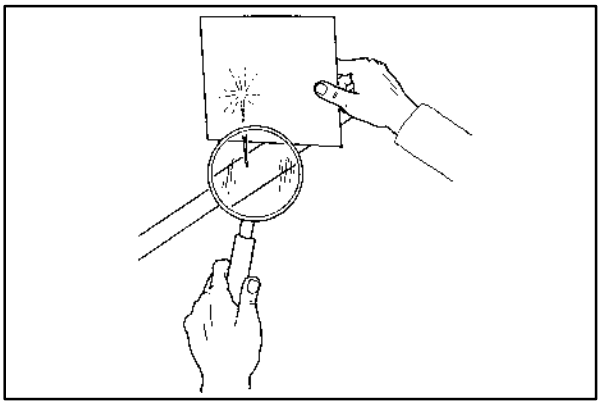

00002

If you discover a fluid leak, contact your mechanic/supervisor.

PROPELLING MOTOR

Torque the shaft nut to 237 Nm (175 ft lb) plus enough torque to align the slotted nut and the shaft hole after the first 50-hours of operation, and every 800 hours there after.

ENGINE

COOLING SYSTEM

Check the radiator coolant every 100 hours of operation. Use clean water mixed with a permanent-type, ethylene glycol antifreeze to a -34° C (-30° F) rating. The coolant level should be 25 to 50 mm (1 to 2 in) below the filler opening.

FOR SAFETY: When servicing machine, avoid contact with hot engine coolant.

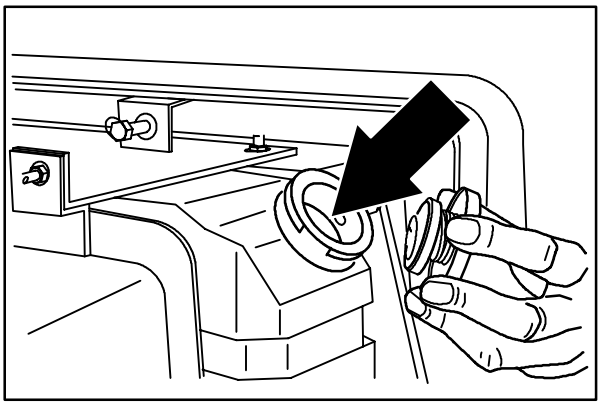

08432

Check the radiator hoses and clamps every 200 hours of operation. Tighten the clamps if they are loose. Replace clamps if they no longer tighten properly. Replace hoses if they become hard, cracked, or swollen.

Check the radiator core exterior and hydraulic cooler fins for debris every 100 hours of operation. Blow or rinse all dust, which may have collected on the radiator, in through the grille and radiator fins, opposite the direction of normal air flow. The grille and hydraulic cooler open for easier cleaning. Be careful not to bend the cooling fins when cleaning. Clean thoroughly to prevent the fins becoming encrusted with dust. Clean the radiator and cooler only after the radiator has cooled to avoid cracking.

FOR SAFETY: When servicing machine, wear eye and ear protection when using pressurized air or water.

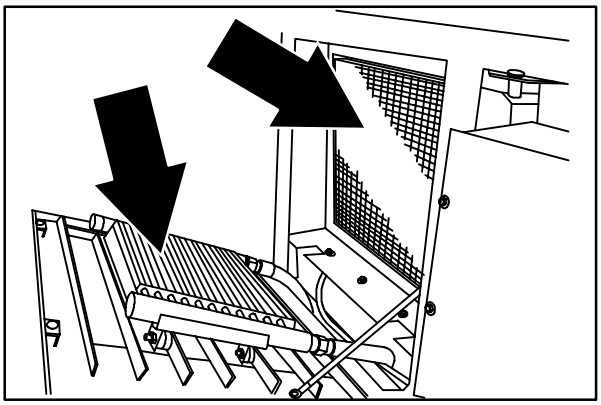

08454

Flush the radiator and the cooling system every 400 hours of operation, using a dependable cleaning compound.

AIR FILTER INDICATOR

The air filter indicator shows when to replace the air filter element. Check the indicator daily. The indicator's red line will move as the air filter element fills with dirt. Do not replace the air filter element until the red line reaches 5 kPa (20 in H_2O) and the "SERVICE WHEN RED" window is filled with red. The indicator's red line may return to a lower reading on the scale when the engine shuts off. The red line will return to a correct reading after the engine runs for a while.

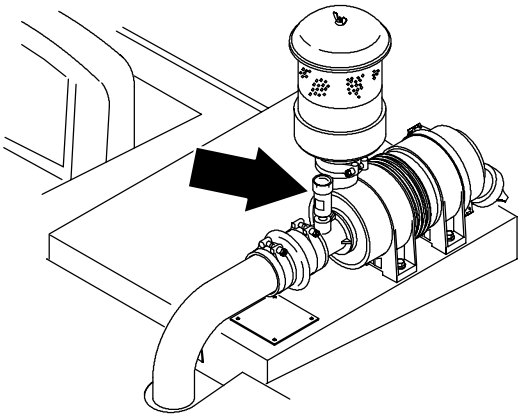

Reset the air filter indicator by pushing the reset button on the end of the indicator after replacing the air filter element.

WATER SEPARATOR/FUEL FILTER

The water separator/fuel filter filters impurities from the fuel and separates any water from the fuel system. It is located on the right side of the engine compartment. Water can be drained from the drain cock at the bottom as needed.

Replace the water separator/fuel filter element every 400 hours of operation.

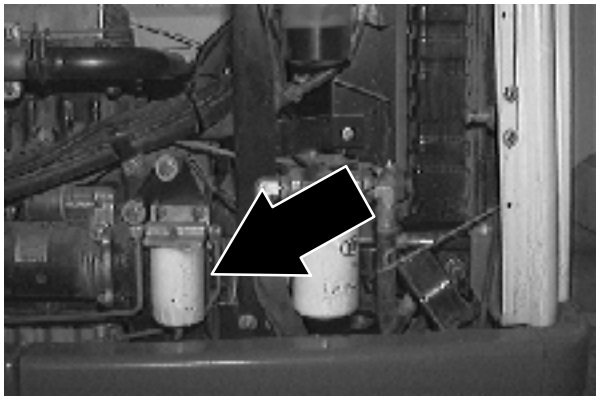

ENGINE FUEL FILTER

The engine fuel filter filters impurities from the fuel. It is located on the left side of the engine.

Replace the engine fuel filter element every 400 hours of operation.

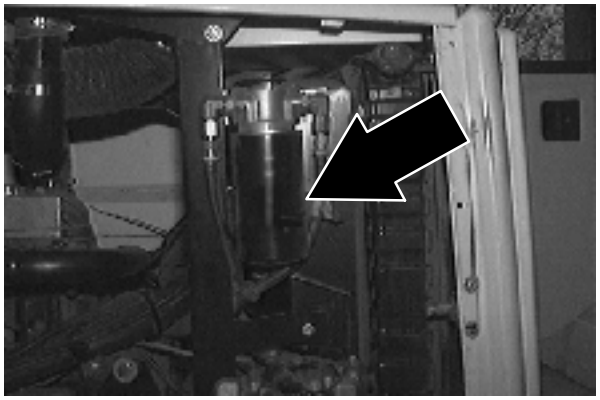

FUEL LINES

Check the fuel lines for wear and leaks every 50 hours of operation.

For older style fuel lines made of rubber, the fuel lines become worn out whether the engine has been used much or not. Replace the fuel lines every two years. If the fuel lines are found worn or damaged before two years' time, replace or repair them at once.

Bleed the fuel system after replacement of any of the fuel lines, When the fuel lines are not installed, plug both ends with clean cloth or paper to prevent dirt from entering the lines. Dirt in the lines can cause fuel injection pump malfunction.

BATTERY

The battery for the machine is a low maintenance battery. Do not add water to the battery, or remove the battery vent plugs.

The battery is located behind the engine access panel in the operator compartment.

After the first 50 hours of operation, and every 800 hours after that, clean and tighten the battery connections.

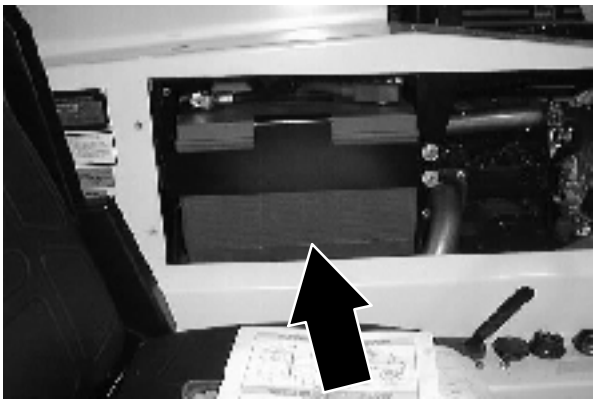

CHAINS

STATIC DRAG CHAIN

A static drag chain prevents the buildup of static electricity in the machine. The chain is attached to the machine by a rear main brush skirt retaining bolt.

Make sure the chain is touching the floor at all times.

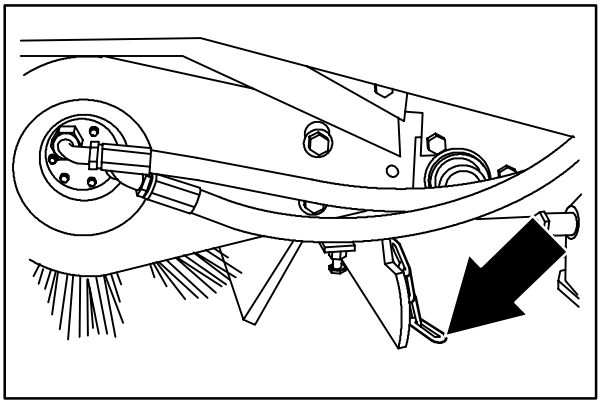

08449

AIR CONDITIONING FILTER (OPTION)

The air conditioning filter should be inspected and cleaned per the cleaning instructions on the side of the filter every 100 hours of operation.

NOTE: In extremely dusty sweeping environments, clean or replace the filter as often as necessary.

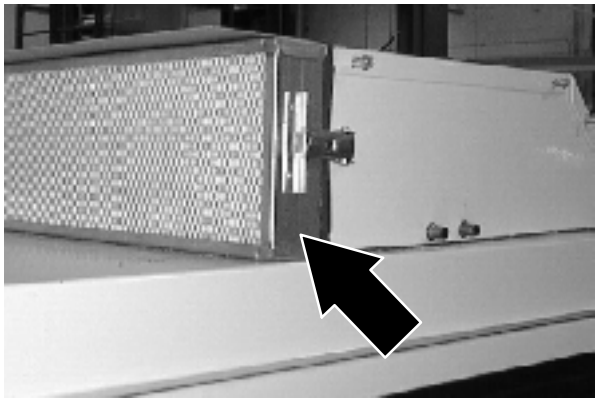

DEBRIS HOPPER

HOPPER DUST FILTER

The dust filters filter the air pulled up from the hopper. The dust filters are equipped with a shaker to remove the accumulated dust particles. The dust filters shaker is operated by the filter shaker switch.

Shake the dust filters before dumping the hopper and at the end of every work shift. Avoid shaking the filters while the hopper is in a rolled out position. Check and clean the dust filters every 50 hours of operation. Extremely dusty conditions may require more frequent cleaning of dust filters.

To clean the dust filters, use one of the following methods:

- SHAKING – Press the filter shaker switch.
- AIR – Blow compressed air through the dust filter from the inside. This may be done with the dust filter in the machine, or for more efficient cleaning remove the dust filter from the machine and the prescreen wrap from the filter element. Always wear eye protection when using compressed air.

  FOR SAFETY: When servicing machine, wear eye and ear protection when using pressurized air or water.

- WATER – Remove the fabric presceen wrap from the filter element. Wash the prescreen wrap in a water and mild detergent solution. Rinse the prescreen wrap until it is clean. Air dry the wet prescreen wrap; do not use compressed air. **NEVER** wash the filter element with water.

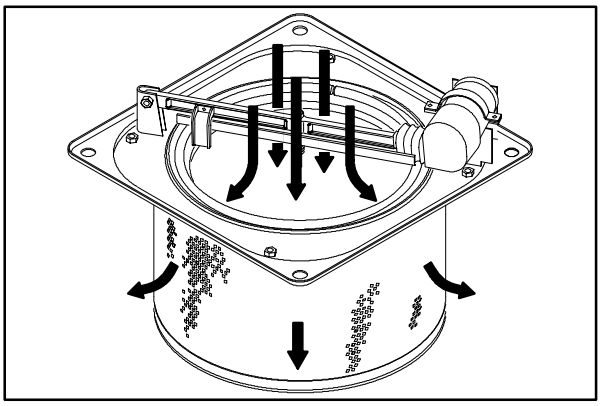

08594

TO REMOVE OR REPLACE HOPPER DUST FILTER

1. Stop the engine and set the machine parking brake.

   FOR SAFETY: Before leaving or servicing machine; stop on level surface, set parking brake, turn off machine and remove key.

2. Open the hopper cover.
3. Disconnect the shaker motor wire connectors.

4. Remove the four retaining screws from the filter shaker frame.

5. Pull the filter shaker frame out of the hopper.

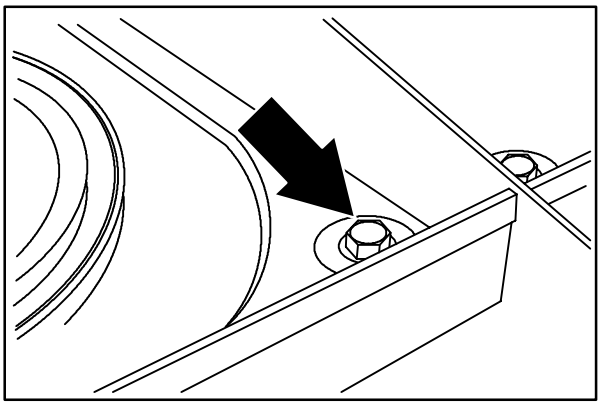

08591

6. Carefully turn over the shaker frame and element.

7. Loosen the four filter retaining screws from the shaker frame.

8. Remove the retainer ring from the shaker frame. Remove the filter.

9. Make sure the prescreen wrap is tightly wrapped around and securely fastened on the new filter element. Put the new filter on the filter shaker frame.

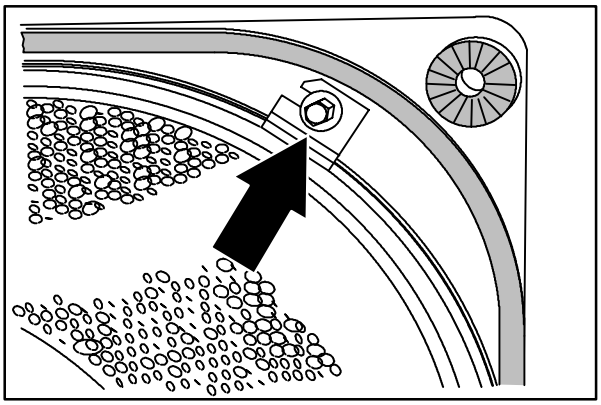

08592

10. Place the retainer ring over the filter. Make sure the retaining ring fits inside the lip of the filter element all the way around. Line up the slots on the retainer ring with the retaining screws holes.

11. Mount using the retaining screws.

12. Check the seal on the shaker frame for damage. Make sure the vibration isolators are mounted in all four corners of the filter shaker frame.

13. Put the filter and shaker frame in the hopper.

14. Install the four retaining screws and tighten.

15. Connect the shaker motor wire connectors.

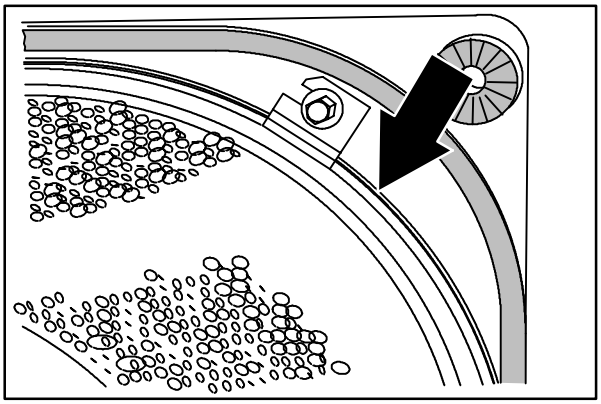

08593

THERMO SENTRY™

The Thermo Sentry™ senses the temperature of the air pulled up from the hopper. If there is a fire in the hopper, the Thermo Sentry™ stops the vacuum fan and cuts off the air flow. The Thermo Sentry™ is located on the vacuum fan housing.

Reset the Thermo Sentry™ by pushing in its reset button.

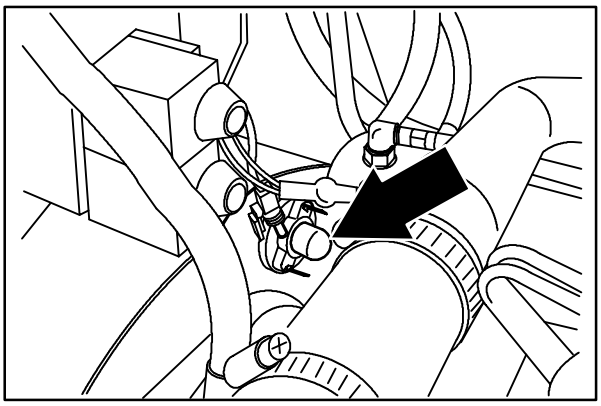

08928

BRUSHES

MAIN BRUSH

The main brush is cylindrical and spans the width of the machine, sweeping debris into the hopper.

Check the brush daily for wear or damage. Remove any string or wire tangled on the main brush, main brush drive hub, or main brush idler hub.

Check the main brush pattern daily. The pattern should be 50 to 65 mm (2 to 2.5 in) wide. Adjust the main brush pattern by turning the main brush pressure knob located next to the operator seat.

Rotate the main brush end-for-end every 50 hours of operation for maximum brush life and best sweeping performance.

Replace the main brush when the remaining bristles measure 30 mm (1.25 in) in length.

TO REPLACE MAIN BRUSH

1. Stop the engine and set the machine parking brake.

   FOR SAFETY: Before leaving or servicing machine; stop on level surface, set parking brake, turn off machine and remove key.

2. Raise the main brush.

3. Open the right side main brush access door.

4. Unlatch and remove the brush idler plate.

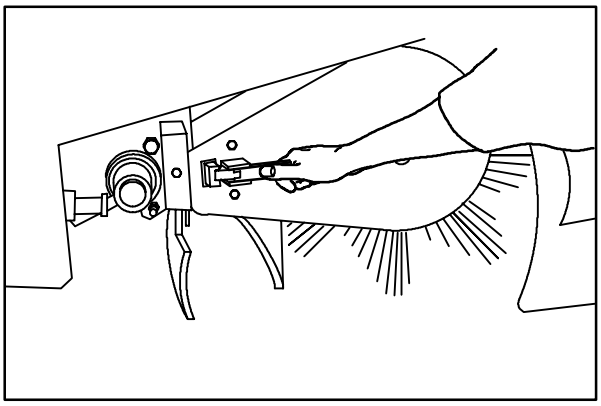

08487

5. Grasp the main brush; pull it off the brush drive plug and out of the main brush compartment.

6. Put the new or rotated end-for-end main brush on the floor next to the access door.

7. Slide the main brush onto the drive plug. Rotate the brush until it engages the drive plug, and push it all the way onto the plug.

8. Slide the main brush idler plate plug onto the main brush.

9. Latch the idler plate onto the machine frame.

10. Close the right side main brush access door.

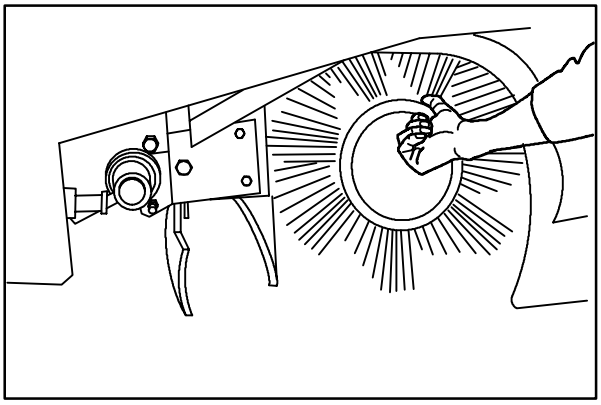

08488

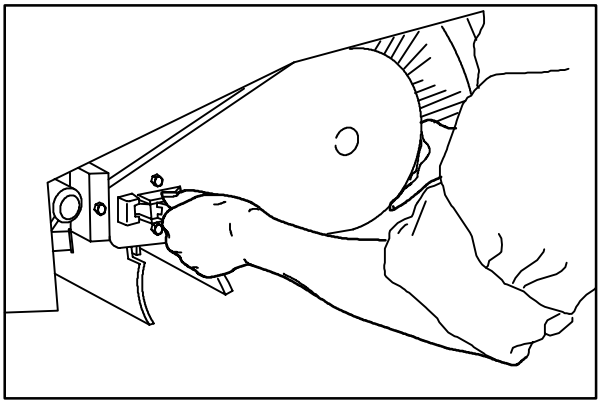

08489

TO CHECK AND ADJUST MAIN BRUSH PATTERN

1. Apply chalk, or some other material that will not blow away easily, to a smooth, level floor.

2. Raise the side brush and main brush and position the main brush over the chalked area.

3. Start the main brush.

4. Lower the main brush for 15 to 20 seconds while keeping a foot on the brakes to keep the machine from moving. This will lower the rotating main brush.

NOTE: If chalk or other material is not available, allow the brushes to spin on the floor for two minutes. A polish mark will remain on the floor.

5. Raise the main brush.

6. Stop the main brush.

7. Drive the machine off the test area.

8. Observe the width of the brush pattern. The proper brush pattern width is 65 to 75 mm (2.5 to 3.5 in).

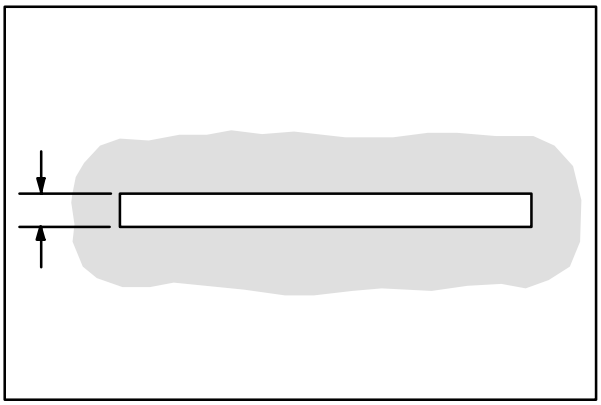

00582

9. To increase the width of the main brush pattern, turn the main brush down pressure knob counter-clockwise.

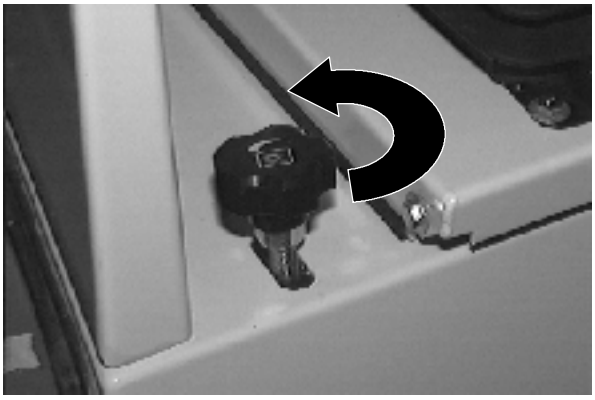

To decrease the width of the main brush pattern, turn the main brush down pressure knob clockwise.

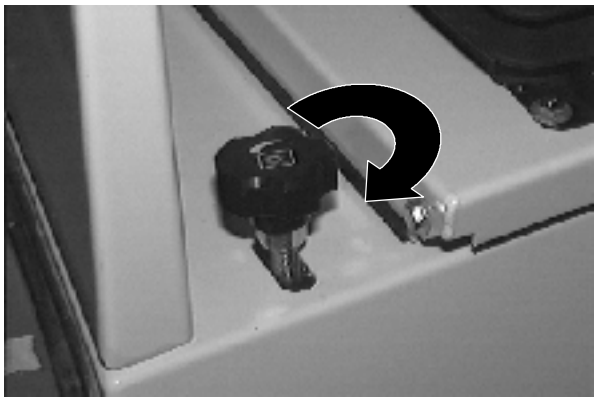

If the main brush pattern is tapered, more than 15 mm (0.5 in) on one end than the other, adjust the taper at the drive end of the brush.

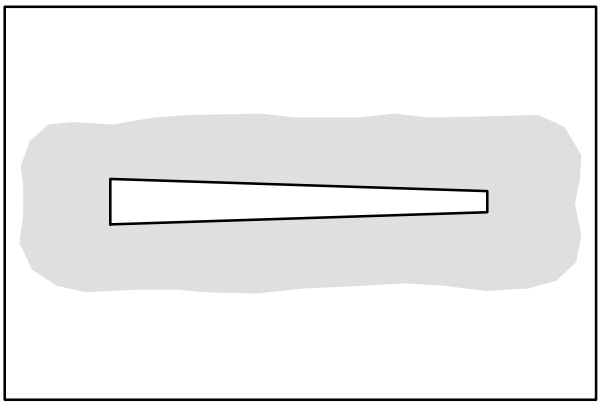

00601

A. Loosen the brush drive end plate mounting bolts.

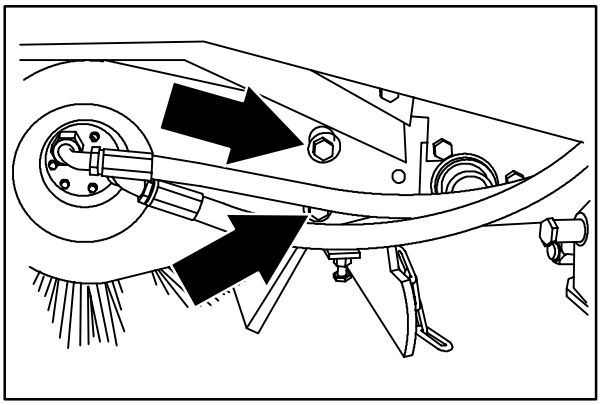

08450

B. Turn the taper adjustment nut counter-clockwise to increase the pattern width at the brush drive end, and clockwise to decrease the pattern width at the brush drive end. Tighten the drive end plate mounting bolts.

C. Check the main brush pattern and readjust as necessary. Then adjust the width of the main brush pattern.

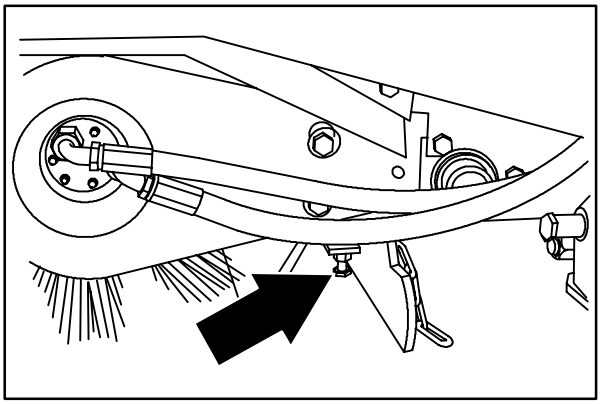

08490

SIDE BRUSH

The side brush sweeps debris along edges into the path of the main brush.

Check the brush daily for wear or damage. Remove any string or wire found tangled on the side brush or side brush drive hub.

Check the side brush pattern daily.The side brush bristles should contact the floor in a 10 o'clock to 3 o'clock pattern when the brush is in motion. Adjust the side brush pattern by the side brush down pressure knob. Turn the knob counter-clockwise to increase the brush contact with the sweeping surface, and clockwise to decrease the brush contact with the sweeping surface.

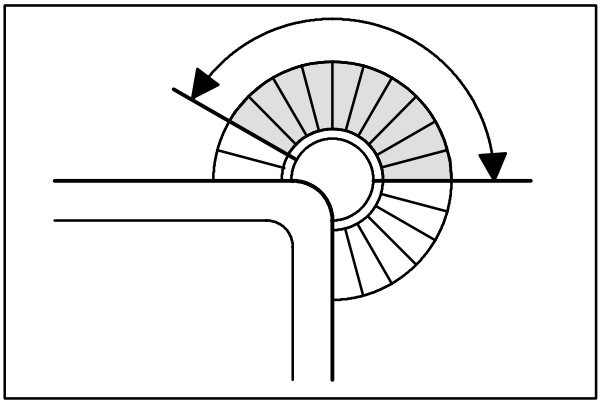

350327

The side brush should be replaced when it no longer sweeps effectively for your application. A guideline length is when the remaining bristles measure 50 mm (2 in) in length. You may change the side brush sooner if you are sweeping light litter, or wear the bristles shorter if you are sweeping heavy debris.

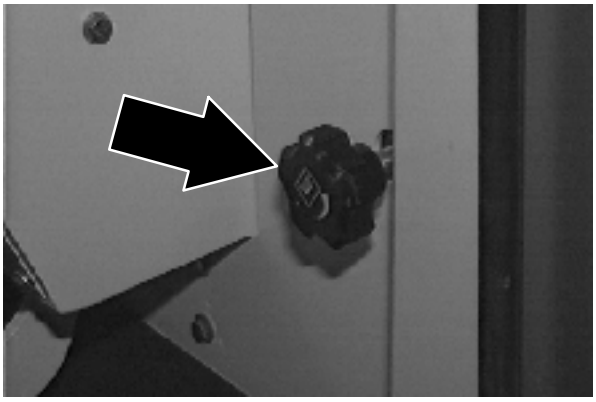

TO REPLACE SIDE BRUSH

1. Empty the debris hopper.
2. Set the machine parking brake.
3. Raise the hopper.
4. Stop the engine.

   FOR SAFETY: Before leaving or servicing machine; stop on level surface, set parking brake, turn off machine and remove key.

5. Remove the side brush retaining pin from the side brush drive shaft.
6. Slide the side brush off the side brush drive shaft.

NOTE: Remove the drive hub and put it on the new brush if one is not installed.

7. Slide the new side brush onto the side brush drive shaft.
8. Insert the side brush retaining pin through the side brush hub and shaft and secure.

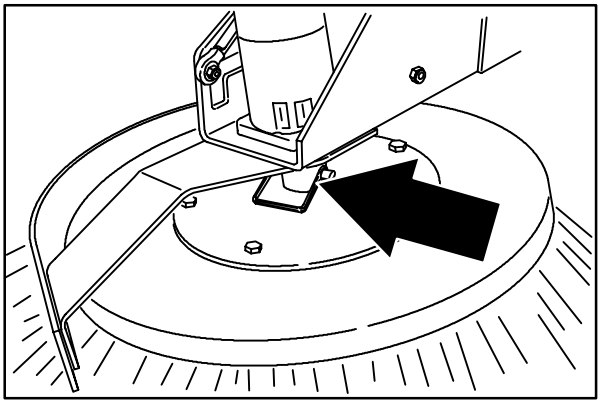

08466

9. Disengage the hopper support bar and lower the hopper.

10. Adjust the side brush pattern with the side brush down pressure knob.

SKIRTS AND SEALS

HOPPER LIP SKIRTS

The hopper lip skirts are located on the bottom rear of the hopper. The skirts float over debris and help deflect that debris into the hopper. The top skirt is segmented.

Check the hopper lip skirts for wear or damage daily.

Replace the hopper lip skirts when they no longer touch the floor.

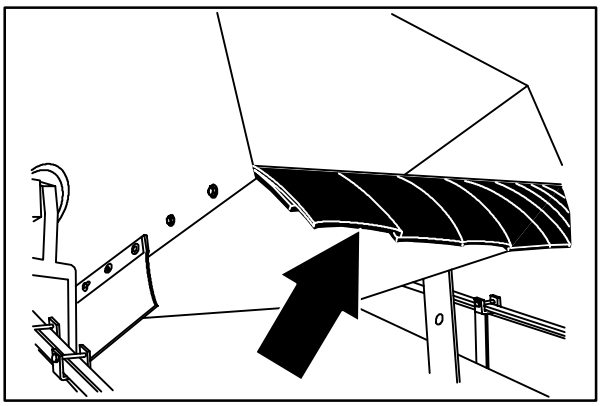

08491

BRUSH COMPARTMENT SKIRTS

The brush compartment skirts are located on the bottom of each of the two main brush doors and around the ends of the brush on the main frame. The inside brush door skirt should touch the floor, and the outside brush door skirt should clear the floor by 3 to 5 mm (0.12 to 0.25 in).

Check the skirts for wear or damage and adjustment daily.

NOTE: The brush door skirts have slotted holes to allow for a ground clearance adjustment. The door must be closed for proper adjustment.

NOTE: Tire pressure will affect skirt clearances.

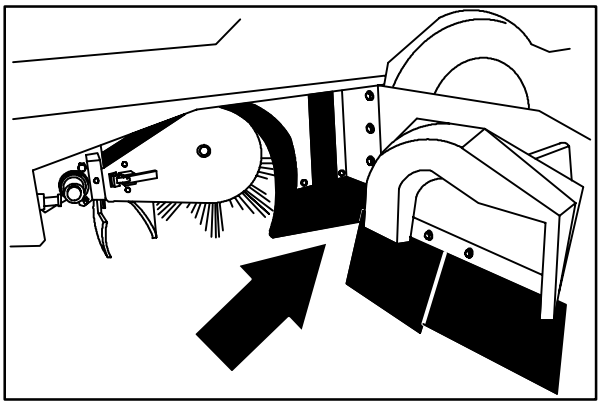

08493

REAR SKIRTS

The two rear skirts are located on the bottom rear of the main brush compartment. The vertical skirt should clear the floor up to 20 mm (0.75 in) in dusty conditions, and touch the floor otherwise. The recirculation skirt is self-adjusting.

Check the skirts for wear or damage and adjustment daily.

NOTE: Tire pressure will affect skirt clearances.

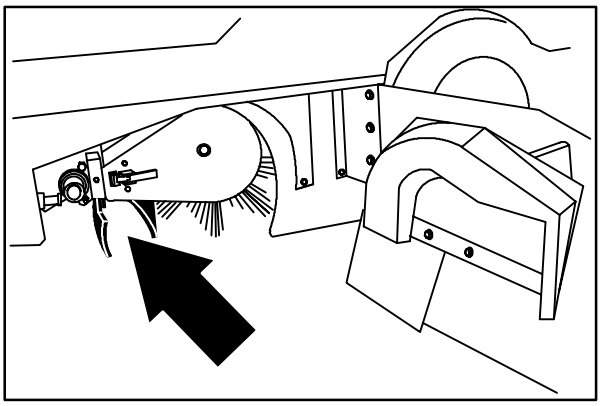

08494

BRUSH DOOR SEALS

The brush door seals are located on both main brush doors and on corresponding portions of the main frame.

Check the seals for wear or damage every 100 hours of operation.

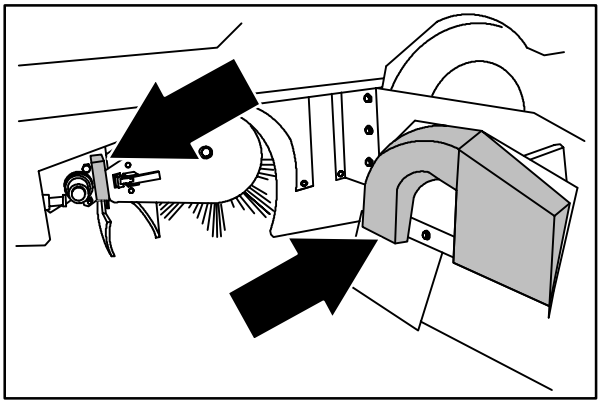

08495

HOPPER SEALS

The hopper seals are located on the top and side portions of the machine frame that contact the hopper.

Check the seals for wear or damage every 100 hours of operation.

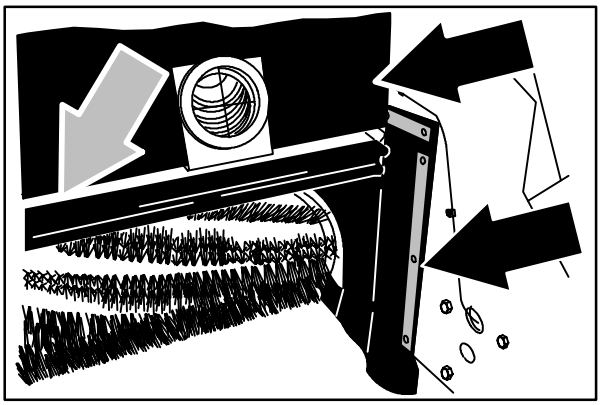

08496

HOPPER DOOR SEALS

The hopper door seals are located on the hopper door. They seal the hopper when the hopper door is closed.

Check the seals for wear or damage every 100 hours of operation.

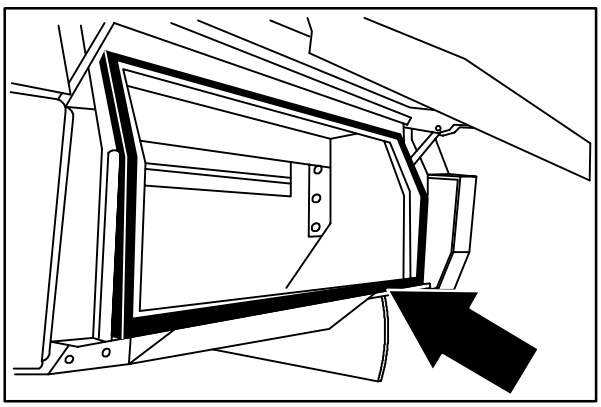

08497

HOPPER SIDE SKIRT

The hopper side skirt is located on the left side of the hopper.

Check the hopper side skirt for wear or damage daily.

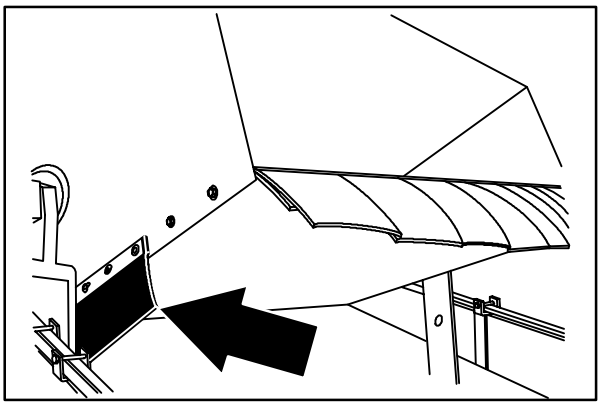

08492

HOPPER DUST SEAL

The hopper dust seal is located inside the hopper. It seals the hopper filter compartment.

Check the seal for wear or damage every 100 hours of operation.

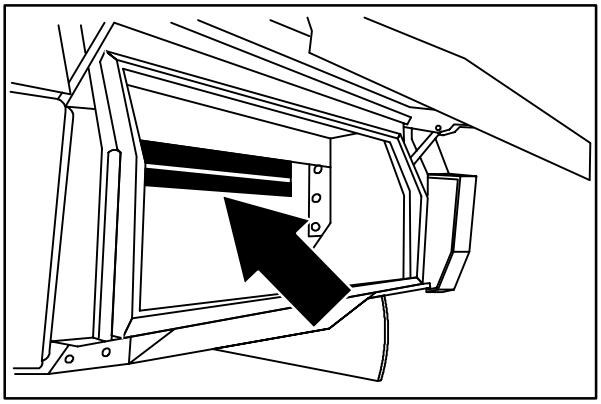

08498

HOPPER COVER SEAL

The hopper cover seals are located on the inside of the hopper cover. They seal the hopper filter compartment.

Check the seal for wear or damage every 100 hours of operation.

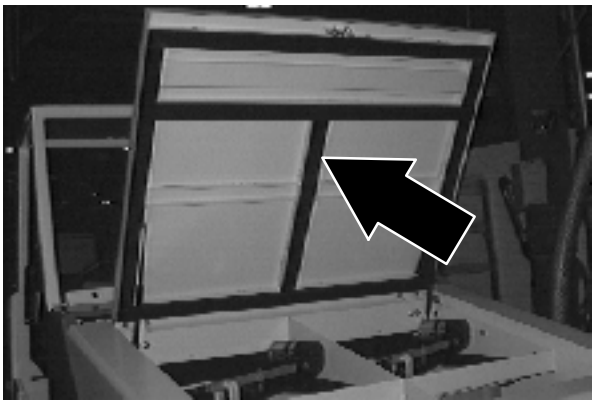

HOPPER VACUUM FAN SEAL

The hopper vacuum fan seal is mounted on the the vacuum fan inlet bracket.

Check the seal for wear or damage every 100 hours of operation.

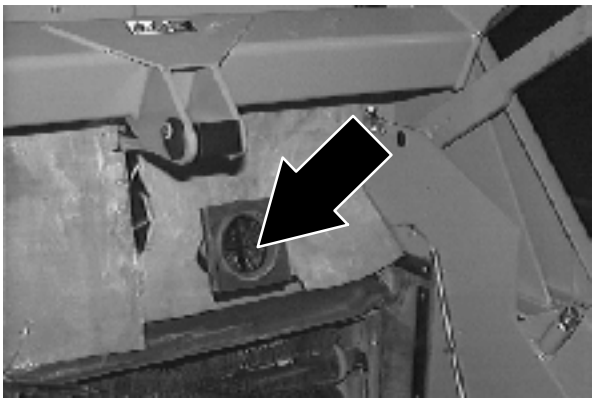

BRAKES AND TIRES

SERVICE BRAKES

The hydraulic service brakes are located on the front wheels.

The master brake cylinder is located on the fire wall.

Check the master brake cylinder fluid level every 400 hours of operation.

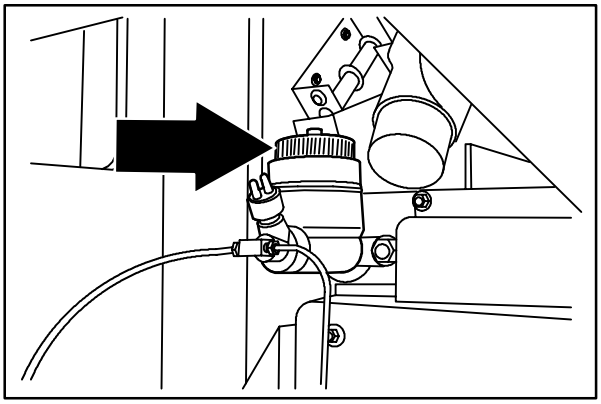

08501

PARKING BRAKE

Adjust the parking brake whenever it becomes very easy to set, when the machine rolls after setting it, and after every 200 hours of operation.

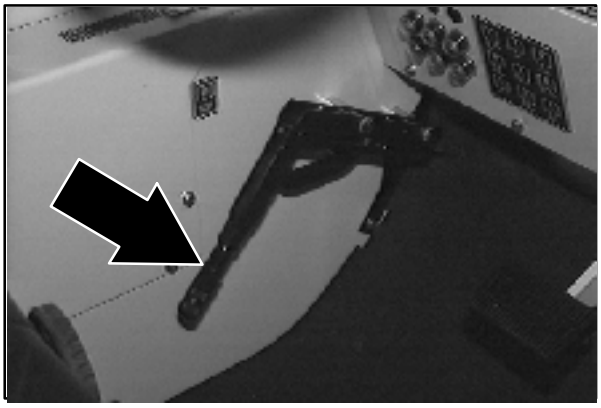

TIRES

The standard machine tires are pneumatic.

Check the tire pressure every 100 hours of operation. The proper tire air pressure is 690 – 758 kPa (100 – 110 psi).

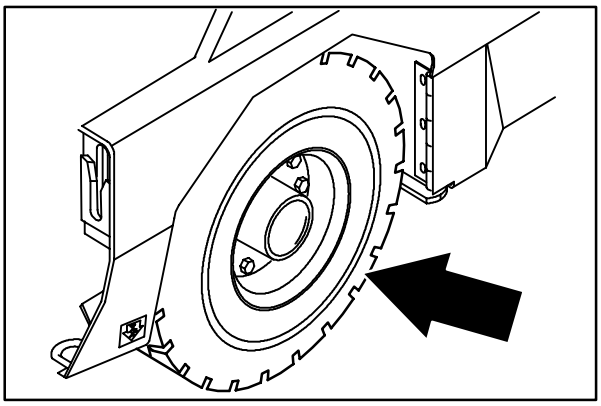

08575

FRONT WHEEL

Torque the front wheel nuts twice in the pattern shown to 168 to 196 Nm (120 to 140 ft lb) after the first 50-hours of operation, and every 800 hours there after.

REAR WHEEL

Torque the rear wheel nuts twice in the pattern shown to 102 to 115 Nm (75 to 85 ft lb) after the first 50-hours of operation, and every 800 hours there after.

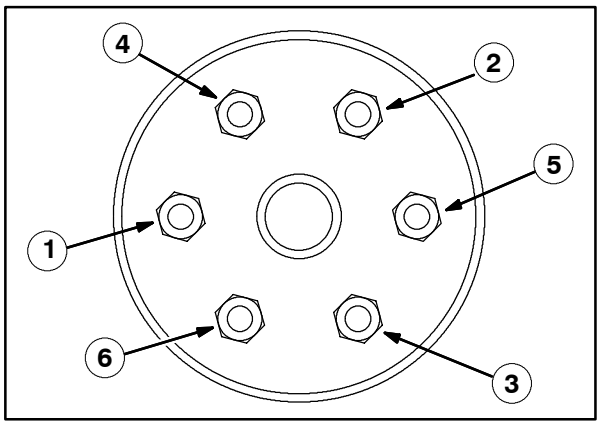

PUSHING, TOWING, AND TRANSPORTING THE MACHINE

PUSHING OR TOWING THE MACHINE

If the machine becomes disabled, it can be pushed from the front or rear, but towed only from the rear.

The propelling pump has a bypass valve to prevent damage to the hydraulic system when the machine is being pushed or towed. This valve allows a disabled machine to be moved for a *very short distance* and at a speed to not exceed 1.6 kp/h (1 mph). The machine is NOT intended to be pushed or towed a long distance or at a high speed.

ATTENTION! Do not push or tow machine for a long distance and without using the bypass valve, or the machine hydraulic system may be damaged.

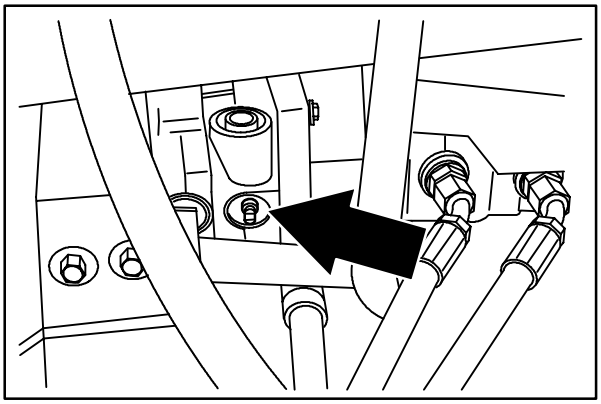

08576

Turn the bypass valve 90° from the normal position before pushing or towing the machine. **The illustration shows the bypass valve in the pushing or towing position.**

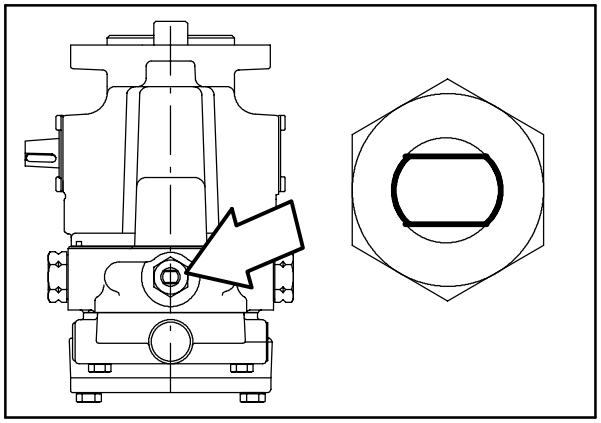

TRANSPORTING THE MACHINE

1. Position the rear of the machine at the loading edge of the truck or trailer.

   FOR SAFETY: Use truck or trailer that will support the weight of the machine.

NOTE: Empty the hopper before transporting the machine.

2. If the loading surface is not horizontal or is higher than 380 mm (15 in) from the ground, use a winch to load machine.

   If the loading surface is horizontal AND is 380 mm (15 in) or less from the ground, the machine may be driven onto the truck or trailer.

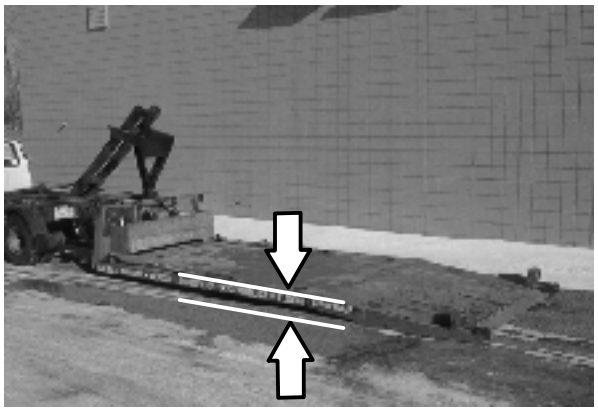

3. To winch the machine onto the truck or trailer, attach the winching chains to the rear tie down locations.

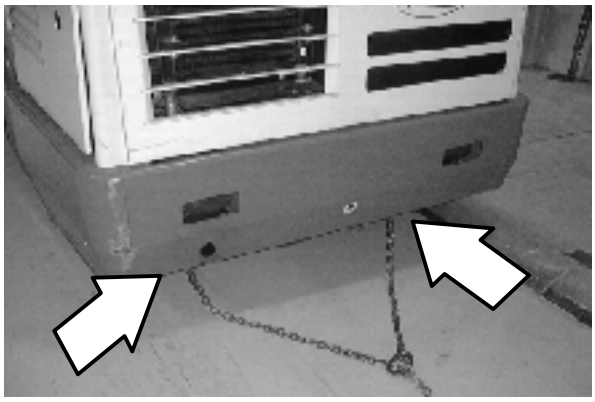

   The rear tie-down locations are through the U-bolt section of the main frame under the side bumpers toward the rear.

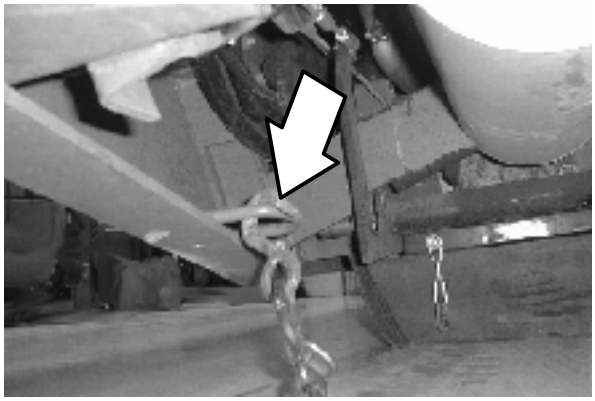

4. Turn the bypass valve 90° from the normal position before winching the machine onto the truck or trailer. See *PUSHING OR TOWING THE MACHINE* section of this manual. Make sure the machine is centered.

   FOR SAFETY: When loading machine onto truck or trailer, use winch. Do not drive the machine onto the truck or trailer unless the loading surface is horizontal AND is 380 mm (15 in) or less from the ground.

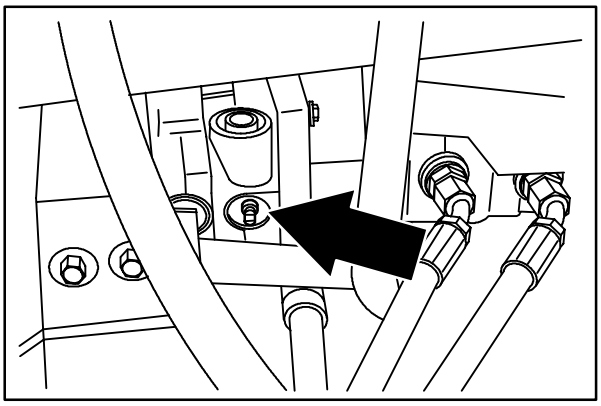

08576

5. Position the machine onto the truck or trailer as far as possible. If the machine starts to veer off the centerline of the truck or trailer, stop and turn the steering wheel to center the machine.

6. Set the parking brake and block the machine tires. Tie down the machine to the truck or trailer before transporting.

   The two front tie-down locations are through the U-bolt section of the main frame in front of the wheels.

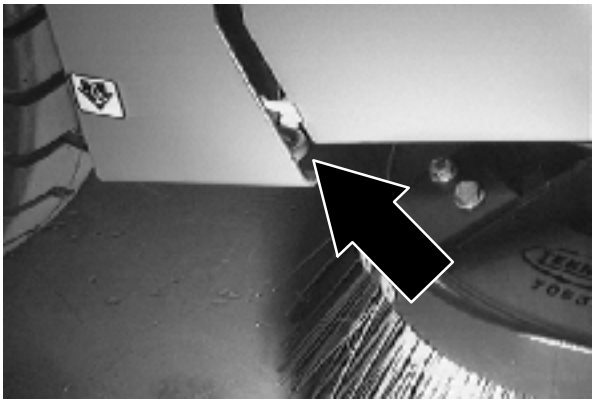

   The two rear tie-down locations are through the U-bolt section of the main frame under the side bumpers toward the rear.

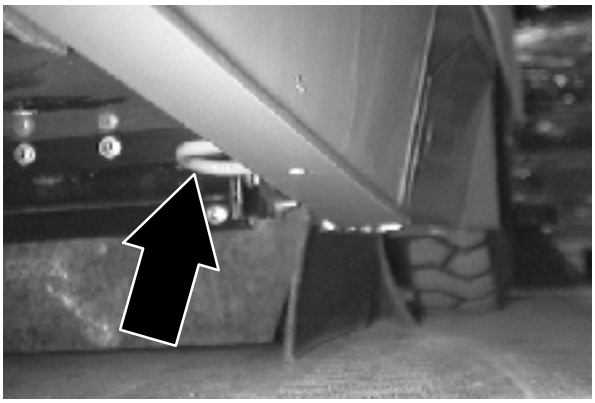

7. If the loading surface is not horizontal or is higher than 380 mm (15 in) from the ground, use a winch to unload machine.

   If the loading surface is horizontal AND is 380 mm (15 in) or less from the ground, the machine may be driven off the truck or trailer.

   FOR SAFETY: When unloading machine off truck or trailer, use winch. Do not drive the machine off the truck or trailer unless the loading surface is horizontal AND 380 mm (15 in) or less from the ground.

MACHINE JACKING

Empty the hopper before jacking the machine.You can jack up the machine for service at the designated locations. Use a jack or hoist that will support the wieght of the machine. Always stop the machine on a flat, level surface and block the tires before jacking the machine up.

The front jacking locations are the flat bottom edge of the machine frame next to the front tires.

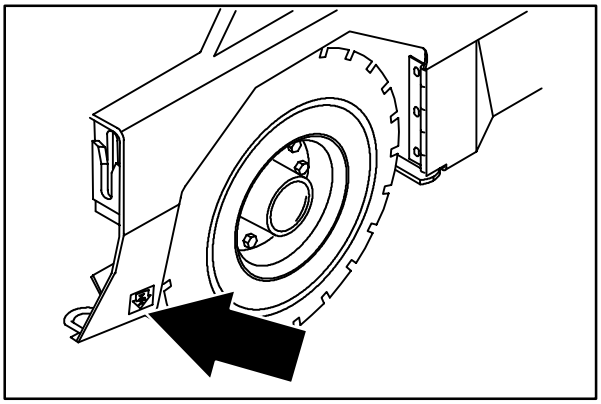

08485

The rear jacking location is the middle of the rear bumper.

FOR SAFETY: When servicing machine, block machine tires before jacking machine up.

FOR SAFETY: When servicing machine, jack machine up at designated locations only. Block machine up with jack stands.

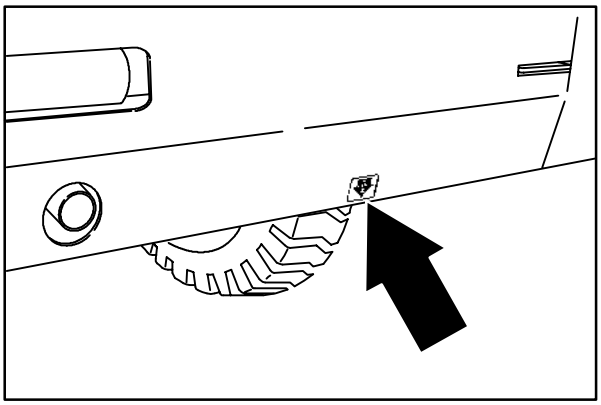

08586

STORING MACHINE

Before storing the machine for an extended period of time, the machine needs to be prepped to lessen the chance of rust, sludge, and other undesirable deposits from forming. Contact TENNANT service personnel.

SPECIFICATIONS

GENERAL MACHINE DIMENSIONS/CAPACITIES

Item	Dimension/capacity
Length	3050 mm (120 in)
Width	1780 mm (70 in)
Height	1335 mm (52.5 in)
Height with overhead guard	2095 mm (82.5 in)
Height with overhead guard and hazard light	2310 mm (91 in)
Height with cab	2095 mm (82.5 in)
Height with cab & air conditioner	2257 mm (89 in)
Height with cab and hazard light	2310 mm (91 in)
Track	1560 mm (61.5 in)
Wheelbase	1420 mm (56 in)
Main brush diameter	405 mm (16 in)
Main brush length	1270 mm (50 in)
Side brush diameter	65 mm (26 in)
Sweeping path width	1270 mm (50 in)
Sweeping path width with side brush	1675 mm (66 in)
Main brush pattern width	50 to 65 mm (2.0 to 2.5 in)
Hopper weight capacity	907.2 kg (2000 lb)
Hopper volume capacity	849.5 L (30 cu ft)
Dust filter area	17.7 m^2 (190 sq ft)
Ceiling height minimum dumping clearance	3355 mm (11 ft)

GENERAL MACHINE PERFORMANCE

Item	Measure
Maximum forward speed	16 kmh (10 mph)
Maximum reverse speed	7.3 kmh (4.5 mph)
Minimum aisle turn width, left	3450 mm (135 in)
Minimum aisle turn width, right	4675 mm (184 in)
Maximum rated climb and descent angle	8.5°

STEERING

Type	Power source	Emergency steering
Rear wheel, hydraulic cylinder and rotary valve controlled	Hydraulic accessory pump	Manual

HYDRAULIC SYSTEM

System	Capacity	Fluid Type
Hydraulic reservoir	47.3 L (12.5 gal)	TENNANT part no. 65869 – above 7° C (45° F)
Hydraulic total	56.8 L (15 gal)	TENNANT part no. 65870 – below 7° C (45° F)

BRAKING SYSTEM

Type	Operation
Service brakes	Hydraulic drum brakes (2), one per front wheel, foot brake master cylinder activated
Parking brake	Utilize service brakes, cable actuated

TIRES

Location	Type	Size	Pressure
Front (2)	Pneumatic	6.5 x 23.5 in	690 – 758 kPa (100 – 110 psi)
Rear (1)	Pneumatic	6.5 x 23.5 in	690 – 758 kPa (100 – 110 psi)

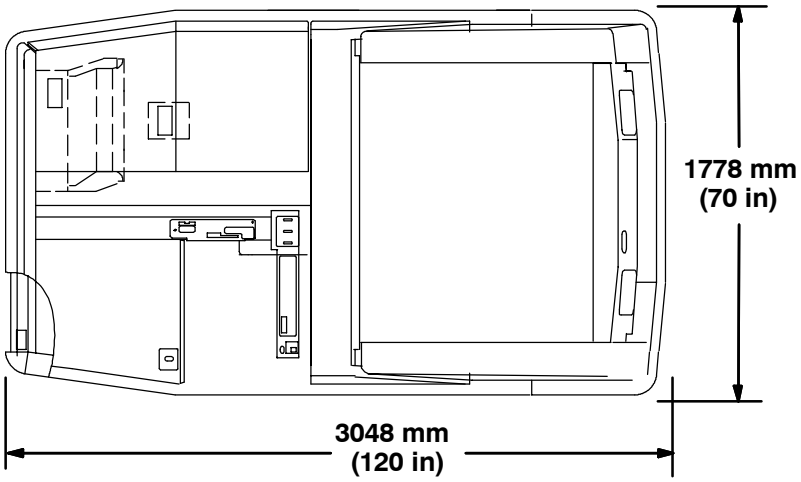

TOP VIEW

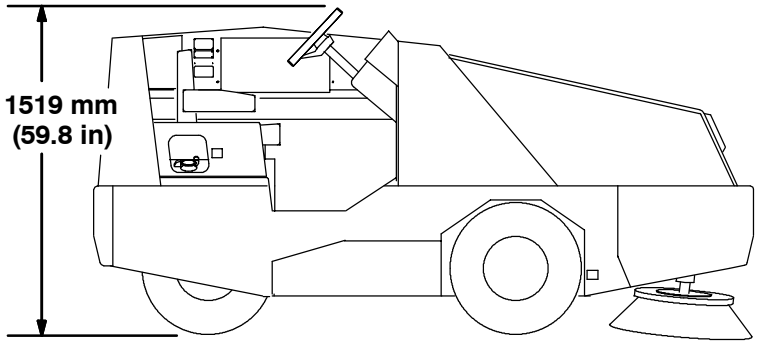

SIDE VIEW

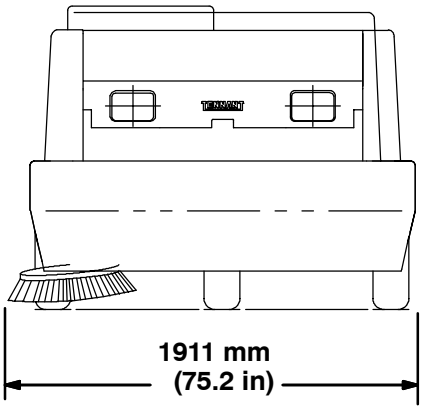

FRONT VIEW

08774

MACHINE DIMENSIONS

INDEX

A

Air conditioning system (option)
filter, 65–66
switch, 30

Air control vents (option), 30

Air filter indicator, 63

Aisle turn, 83

B

Battery, 65
charging system light, 19

Belts, 65

Brake pedal, 13

Brake, parking, 76

Brakes, 76
service, 76
system specifications, 83

Brush & sweeping information, 35

Brush door skirts, 73

Brush doors, latch, 27

Brushes, 68
adjusting main brush taper, 71–73
checking main brush pattern, 69–71
checking side brush pattern, 72
door seals, 74
main brush, 68
main brush minimum bristle length, 68
replacing main brush, 68–70
replacing side brush, 72
side brush, 72
side brush minimum bristle length, 72

Bypass valve, 78

C

Capacities, 82

Chain, static drag, 65

Chains, 65

Circuit breakers, 26

Control panel
charging system light, 19
clogged filter light, 20
engine oil pressure light, 19
engine water temperature light, 19
fuel level gauge, 20
hopper door light (option), 20
hopper temperature light, 19
hourmeter, 21
main brush shut down light, 20

Control panel symbols, 8

Controls, 10
air conditioning switch (option), 30
air control vents (option), 30
brake pedal, 13
directional pedal, 12
dome light switch, 29
fan speed switch (option), 30
filter shaker switch, 22
hazard light switch (option), 21
heater knob, 29
hopper door lever, 16
hopper lift lever, 18
hopper rollout lever, 17
horn button, 18
ignition switch, 23
main brush down pressure knob, 27
main brush switch, 24
operating lights switch, 21
operation, 12
parking brake, 13
side brush down pressure knob, 14
side brush switch, 14
steering wheel, 25
steering wheel tilt lever, 25
Throttle lever, 15
vacuum fan switch, 22
windshield wiper switch (option), 29

D

Debris hopper, 66–67

Dimensions, 82

Directional pedal, 12
toe adjustment, 13

Dome light switch, 29

Dust filter, 66
cleaning, 66
replacement, 66–67

E

Electrical system
circuit breakers, 26
ignition switch, 23

Engine, 62
air filter indicator, 63
cooling system, 62
fuel filter, 64
fuel lines, 64
lubrication, 58

oil capacity, 58
oil level, 5
oil pressure light, 19
water separator/fuel filter, 64
water temperature light, 19

Engine cover, latch, 27

Engine side door, latch, 27

F

Fan speed switch (option), 30

Filter, air conditioning (option), 65–66

Filter shaker switch, 22

Filters
engine, fuel, 64
hopper dust, 66
hopper dust filter replacement, 66–67
hopper filter cleaning, 66
Regenerative Filter System (RFS) (option), 53–54
water seperator/fuel, 64

Front wheel, 77

Fuel filter, engine, 64

Fuel filter/water seperator, 64

Fuel level gauge, 20

Fuel system, fuel lines, 64

G

Glow plugs light, 26

H

Hazard light switch, 21

Heater knob, 29

Hopper, 66–67
changing dust filter, 66–67
clogged filter light, 20
cover seal, 75
door lever, 16
door light (option), 20
door seals, 74
dust filter, 66
dust seal, 75
emptying, 40–41
filter cleaning, 66
filter shaker, 22
lift lever, 18
lip skirts, 73
rollout lever, 17
seals, 74
side skirt, 75
support bar, 28
support bar disengagement, 47–48
support bar engagement, 45–46
Thermo Sentry, 19, 68
vacuum fan seal, 75

Hopper cover, latch, 27

Hopper door, operation, 16

Hopper door lever, 16

Hopper lift lever, 18

Hopper rollout lever, 17

Hopper support bar, 28

Horn button, 18

Hourmeter, 21

Hydraulic fluid, 61

Hydraulic fluid reservoir, 60

Hydraulic hoses, 61

Hydraulic system
fluid, 61
fluid filter, 60
fluid level, 60
fluid reservoir, 60
propelling motor, 62

Hydraulics
fluid level, 5
hoses, 61
system specifications, 83

I

Ignition switch, 23

J

Jack points, 81

K

Knobs
heater, 29
main brush down pressure, 27
side brush down pressure, 14

L

Latches, 27
engine cover, 27
engine side door, 27
hopper cover, 27
main brush doors, 27
rear bumper door, 27
rear door, 27

Levers
hopper door, 16
hopper lift, 18
hopper rollout, 17
parking brake release, 13
steering wheel tilt, 25
Throttle, 15

Lights
battery charging system, 19
clogged filter, 20
engine oil pressure, 19
engine water temperature, 19
glow plugs, 26
hopper door (option), 20
hopper temperature, 19
main brush shut down, 20

Lubrication
engine, 58
front wheel bearings, 59
main brush adjustment, 59
rear wheel support, 58
side brush pivot pins, 59

M

Machine components, 7

Machine dimensions, 84

Machine jacking, 81

Machine storage, 81

Machine tie down location, 80

Machine troubleshooting, 54

Main brush, 68–71
adjusting taper, 71–73
checking brush pattern, 69–71
door seals, 74
door skirts, 73
down pressure knob, 27
information, 35–36
maintenance, 68
replacement, 68–70
shut down light, 20
switch, 24

Main brush adjustment, lubrication, 59

Main brush down pressure knob, 27

Main brush switch, 24

Maintenance chart, 56–57

Motors, propelling, 62

O

Oil capacity, engine, 58

Operating lights switch, 21

Operation
hopper emptying, 40–41
how the machine works, 31
on inclines, 48
post-operation checklist, 44
pre-operation checklist, 31–32
starting the machine, 33–34
stop sweeping, 39
stopping the machine, 42–43
sweeping, 37–38

Operation of controls, 12

Operator responsibility, 5

Operator seat, 28

Options, 49–56
air conditioning switch, 30
air control vents, 30
dome light switch, 29
fan speed switch, 30
hazard light switch, 21
heater knob, 29
hopper door light, 20
Regenerative Filter System (RFS), 53–54
vacuum wand, 49–54
windshield wiper switch, 29

P

Parking brake, 13
adjustment, 76

Pedals
brake, 13
directional, 12

Pushing machine, 78

Pushing or towing the machine, 78

Pushing, towing, and transporting machine, 78

R

Radiator, 62
coolant level, 6, 62
coolant type, 62
flushing the system, 62
hoses, 62

Rear bumper door latch, 27

Rear door latch, 27

Rear wheel, 77

Rear wheel support, lubrication, 58

Regenerative Filter System (RFS) (option), 53–54

S

Safety
hopper support bar disengagement, 47–48
hopper support bar engagement, 45–46
labels, 4
precautions, 3

Seals, 73–75
brush door, 74
hopper, 74
hopper cover, 75
hopper door, 74
hopper vacuum fan, 75
hopper, dust, 75

Seat, operator, adjustment, 28

Side brush, 72
checking brush pattern, 72
down pressure knob, 14
information, 36
minimum bristle length, 72
replacement, 72
switch, 14

Side brush pivot pins, lubrication, 59

Skirts, 73–74
brush door, 73
hopper Lip, 73
hopper, side, 75
rear, 74

Specifications
braking system, 83
climb & descent angle, 83
dumping clearance height, 82
hydraulic system, 83
machine capacities, 82
machine dimensions, 82
machine performance, 83
steering, 83
tires, 83

Static drag chain, 65

Steering, specifications, 83

Steering wheel, 25

Steering wheel tilt lever, 25

Storing machine, 81

Sweeping, 37–38

Sweeping & brush information, 35

Switches
air conditioning (option), 30
dome light (options), 29
fan speed (option), 30
filter shaker, 22
hazard light (option), 21
ignition, 23
main brush, 24
operating lights, 21
side brush, 14
vacuum fan, 22
windshield wiper (option), 29

T

Thermo Sentry, 68

Throttle, Lever, 15

Throttle lever, 15

Tie down location, 80

Tires, 76–78
Front wheel, 77
pressure, 77
rear wheel, 77
specifications, 83

Towing machine, 78

Transporting machine, 78

Transporting the machine, 79

Travel speed, 83

Troubleshooting, 54

V

Vacuum fan switch, 22

Vacuum wand (option), 49–54

Vents, air control, 30

W

Water separator/fuel filter, 64

Wheel bearings, front, lubrication, 59

Windshield wiper switch, 29