6100

Parts Manual

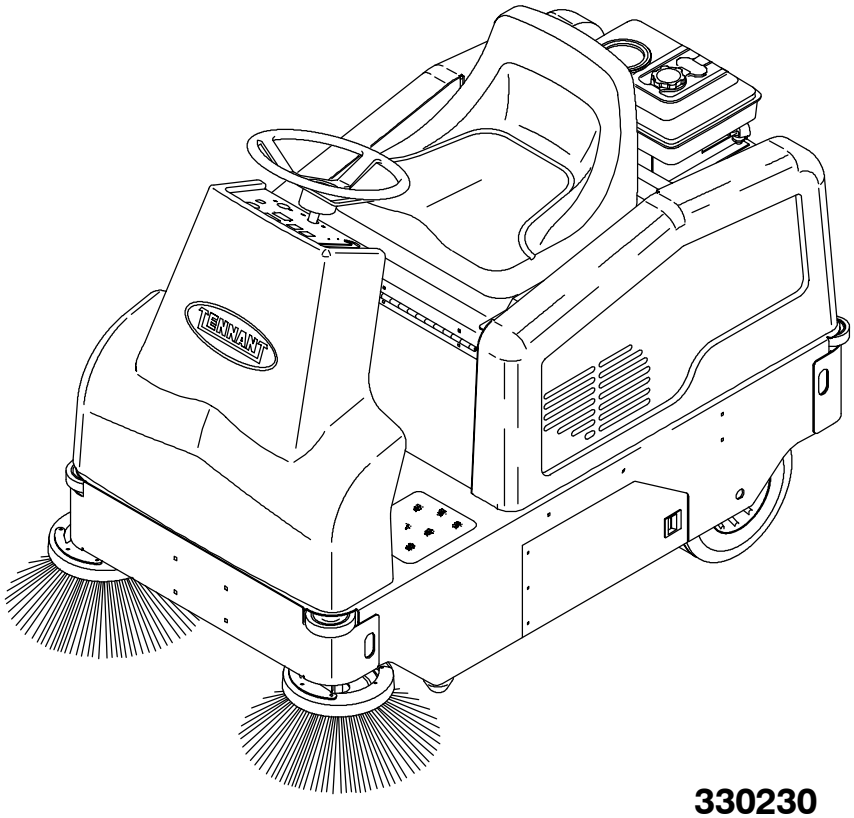

330230

Rev. 04

This manual is furnished with each new TENNANT Model 6100.

This manual consists of the How To Use This Manual; Standard Parts; Options; Breakdowns; Engine Breakdown; and Cross Reference sections.

MACHINE DATA

Please fill out at time of installation for future reference.

Machine Model Number – 6100

Machine Serial Number – _____

Machine Options – _____

TENNANT Representative/phone no. – _____

Customer ID Number – _____

Date of Installation – _____

Manual Number – 330230

Revision: 04

Published: 9–02

Copyright © 1999, 2000, 2001, 2002 TENNANT, Printed in U.S.A.

HOW TO USE THIS MANUAL

This section on *HOW TO USE THIS MANUAL* will tell you how to:

- Find important machine information for ordering correct repair parts.
- Find TENNANT part numbers.
- Order TENNANT parts and supplies.

IMPORTANT INFORMATION

When placing an order for parts, the machine model and machine serial number are important. Refer to the *MACHINE DATA* box which is filled out during the installation of your machine. The *MACHINE DATA* box is located on the inside of the front cover of this manual.

MACHINE DATA

Please fill out at time of installation for future reference.

Machine Model Number - 6100

Machine Serial Number - _____

Machine Options - _____

TENNANT Representative/phone no. - _____

Customer ID Number - _____

Date of Installation - _____

Manual Number - 330230

Revision: 00

Published: 2-99

The model number of your machine is on the side of the machine.

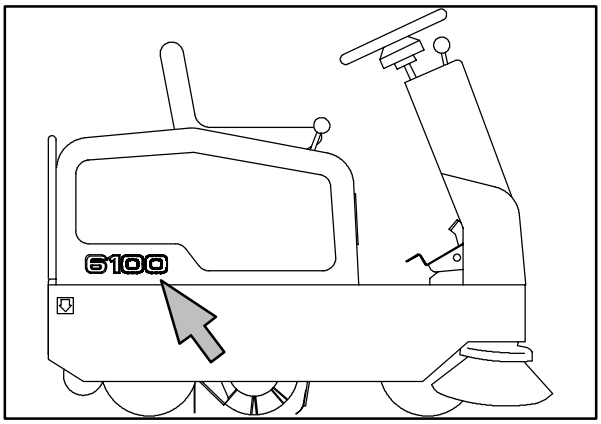

The serial number of your machine is printed on the machine data plate located as shown.

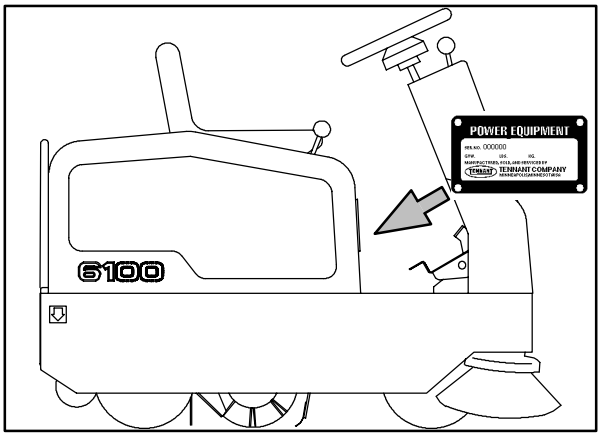

FINDING A TENNANT PART NUMBER

This manual contains the following sections:

- HOW TO USE THIS MANUAL
- STANDARD PARTS
- OPTIONS
- BREAKDOWNS
- ENGINE BREAKDOWN
- CROSS REFERENCE

The STANDARD PARTS section lists repair parts for standard machines. They are grouped in this general order:

- General wear parts.
- Machine frame and related parts.
- Machine propelling system.
- Sweeping components.
- Electrical parts.

The OPTION section lists repair parts of options.

The BREAKDOWN section lists available repair parts of major components.

All sections in this manual consist of parts illustrations and corresponding parts lists.

The parts illustrations are numbered with ***Ref*** numbers which refer to corresponding parts lists.

The parts lists include a number of columns of information:

- ***Ref*** – column refers to the reference number on the parts illustration.
  ▽ – indicates the part is an assembly.
  ▲ – indicates the part is included in the assembly listed just before it.

- ***tennant Part No.*** – column lists the tennant part number for the part.

- ***Serial Number*** – column indicates the set of machines the part number is applicable to. Serial numbers change when the machine design has been modified. The most current design of the machine is shown in the main illustration, older designs are boxed in a corner of the illustration.

- ***Description*** – column is a brief description of the part.

- ***Qty.*** – column lists the quantity of that part used in that area of the machine.

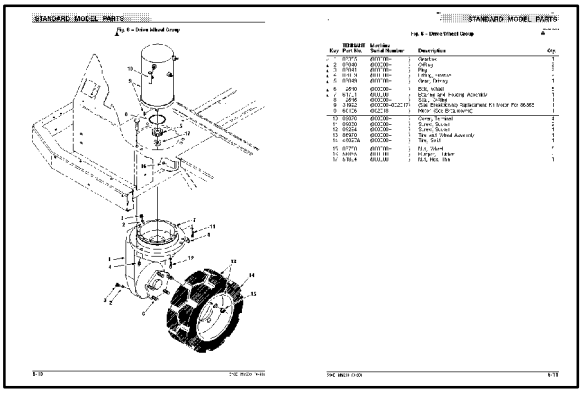

Key	TENNANT Part No.	Machine Serial Number	Description	Qty.
▽ 1	87355	(000000–)	Gearbox	1
▲ 2	87840	(000000–)	O-Ring	2
▲ 3	87841	(000000–)	Plug	2
▲ 4	87839	(000000–)	Fitting, Grease	2
▲ 5	87649	(000000–)	Gear, Driving	1
▲ 6	12540	(000000–)	Bolt, Wheel	5
▲ 7	61791	(000000–)	Bearing and Housing Assembly	1
8	12546	(000000–)	Seal, O-Ring	1
9	31992	(000000–002017)	(See Breakdowns) Replacement Kit Motor For 86356	1
9	60196	(002018–)	Motor (See Breakdowns)	1
10	02076	(000000–)	Cover, Terminal	4
11	09030	(000000–)	Screw, Socket	2
12	09294	(000000–)	Screw, Socket	1
13	86970	(000000–)	Tire and Wheel Assembly	1
14	45027A	(000000–)	Tire, Solid	1
15	87750	(000000–)	Nut, Wheel	5
16	56855	(000000–)	Bumper, Rubber	2
17	51824	(000000–)	Nut, Hex, Thin	1

NOTE: If a service kit is installed on your machine, be sure to keep the INSTRUCTION BULLETIN which came with the kit. It contains repair parts numbers needed for ordering future parts.

NOTE: Fasteners used in this machine may be metric or non-metric. Take care when replacing hardware to replace with same thread size.

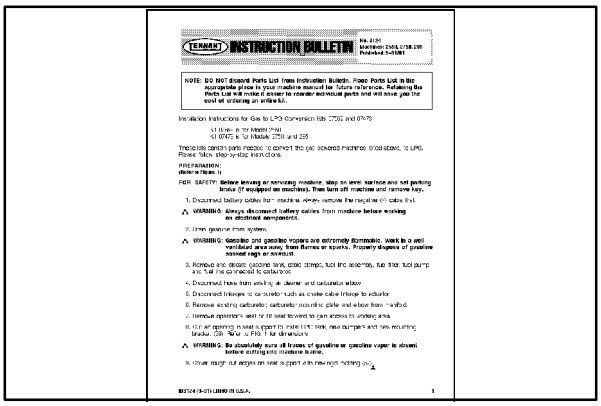

TENNANT INSTRUCTION BULLETIN

No. 3134
Machines: 2555, 2750, 255
Published: 5-01001

NOTE: DO NOT discard Parts List from Instruction Bulletin. Place Parts List in the appropriate place in your machine manual for future reference. Retaining the Parts List will make it easier to reorder individual parts and will save you the cost of ordering an entire kit.

Installation Instructions for Gas to LPG Conversion Kits 37332 and 37475

<1> Kit 37332 is for Models 2750 and 255

<2> 37475 is for Models 2555 and 255

This kit contains parts needed to convert the (all) selected machines from gasoline, to LPG. Please follow step-by-step instructions.

PREPARATION:
Materials Needed:

FOR SAFETY: **Before leveling or servicing machine, step on level surface and set parking brake (if equipped on machine). Then turn off machine and remove key.**

1. Disconnect battery cables from machine. Always remove the negative (-) cable first.

⚠ **WARNING: Always disconnect battery cables from machine before working on electrical components.**

2. Drain gasoline from system.

⚠ **WARNING: Gasoline and gasoline vapors are extremely flammable. Work in a well ventilated area away from flames or sparks. Properly dispose of gasoline soaked rags or overspill.**

3. Remove engine cleaner, gasoline tank, cable clamps, fuel line assembly, fuel filter, fuel pump and fuel line connected to carburetor.
4. Disconnect hose from welding air cleaner and carburetor elbow.
5. Disconnect linkages to carburetor such as choke cable linkage to carburetor.
6. Remove existing carburetor; carburetor mounting plate and elbow from manifold.
7. Remove operator's seat or lift seat forward to gain access to welding area.
8. Cut air opening in seat support to make room for new bumpers and new mounting bracket. See Fig. 1 for dimensions.

⚠ **WARNING: Be absolutely sure all traces of gasoline or gasoline vapor is absent before cutting into machine frame.**

9. Cover rough cut edges on seat support with new rust inhibiting paint.

B3134 (9-01) LITHO IN U.S.A. 1

PLACING AN ORDER

Orders may be placed by phone, fax, or by mail. Phone orders may need written confirmation. Follow the steps below to insure prompt delivery:

1. Identify the model number of your machine.
2. Identify the serial number of your machine.
3. Find the part number of the part you need. Do not order by page number or reference number. If you are not able to find the part number, call your TENNANT representative for help or send the old part as a sample.
4. Determine the quantity of the part you need.
5. Provide the following company information:
   - Company name
   - Customer ID Number
   - Shipping address
   - Billing address
   - First and last name of person ordering parts
   - Telephone number
   - Purchase order number
6. Provide definitive shipping instructions.

Any claim for loss or damage to a shipment in transit should be filed promptly with the transportation company making the delivery. Shipments will be complete unless the packing list or order acknowledgement indicates items back ordered.

If parts received are suspected to be incorrect or defective, please contact the TENNANT representative from whom you ordered the part. They will give authorization for return and/or handle replacement shipments when required.

SECTION 2

Contents **Page**

Fig. 1 – General Recommended Maintenance Items 2-3
Fig. 2 – Replacement Brushes 2-5
Fig. 3 – Main Frame Group 2-6
Fig. 4 – Seat and Shroud Group 2-8
Fig. 5 – Steering Group 2-10
Fig. 6 – Instrument Panel Group 2-12
Fig. 7 – Engine Group, Gas 2-14
Fig. 8 – Fuel Line Group, Gas 2-16
Fig. 9 – Engine Group, LPG 2-18
Fig. 10 – Vaporizer Group, LPG 2-20
Fig. 11 – Fuel Tank Group, LPG 2-22
Fig. 12 – Muffler Group 2-24
Fig. 13 – Battery Group 2-26
Fig. 14 – Hydraulic Schematic 2-28
Fig. 15 – Hydraulic Hose Group 2-29
Fig. 16 – Hydraulic Reservoir Group 2-30
Fig. 17 – Hydraulic Pump and Belts Group 2-32
Fig. 18 – Hydraulic Control Valve Group 2-34
Fig. 19 – Front Wheel Pivot Group 2-36
Fig. 20 – Front Drive Wheel Group 2-38
Fig. 21 – Front Brake Linkage Group 2-40
Fig. 22 – Directional Pedal Group 2-42
Fig. 23 – Rear Wheel Group 2-44
Fig. 24 – Brake Pedal Group 2-46
Fig. 25 – Main Brush Skirts Group 2-48
Fig. 26 – Main Brush Front Flap Group 2-50
Fig. 27 – Main Brush Idler Group 2-52
Fig. 28 – Main Brush Drive Group 2-54
Fig. 29 – Main Brush Drive Shaft Group 2-56
Fig. 30 – Side Brush Lift Group 2-58
Fig. 31 – Side Brush Motor Group 2-60
Fig. 32 – Vacuum Fan Group 2-62
Fig. 33 – Vacuum Fan Box Group 2-64
Fig. 34 – Hopper Group 2-66
Fig. 35 – Filter Shaker Group 2-68
Fig. 36 – Electrical Schematic, Gasoline 2-70
Fig. 36 – Electrical Schematic, Gasoline 2-71
Fig. 37 – Electrical Schematic, LPG 2-72
Fig. 37 – Electrical Schematic, LPG 2-73
Fig. 38 – Wire Harness Group 2-74
Fig. 38 – Wire Harness Group 2-75
Fig. 39 – Label Group 2-77

IC

Fig. 1 - General Recommended Maintenance Items

	Ref.	Tennant Part No.	Machine Serial Number	Description	Qty.
		83189	(000000–)	Knob Assy	1
▽		83119	(000000–)	Skirt Kit	1
▲		81748	(000000–)	Skirt, Side, L.H.	1
▲		81715	(000000–)	Skirt, Side, R.H.	1
▲		81727	(000000–)	Skirt, Recirculation	1
▲		83117	(000000–)	Skirt, Side	2
▲		81740	(000000–)	Skirt, Front	1
▲		81726	(000000–)	Skirt, Recirculation	1
▽		83039	(000000–)	Seal Kit, Hopper	1
▲		81965	(000000–)	Seal, Bulb .50 X .50 X 9.19Lg	2
▲		83115	(000000–)	Seal, Foam, Extrusion 23.5	1
▲		81966	(000000–)	Seal, Bulb .38 X .75 X 22.62Lg	1
▽		83038	(000000–)	Bearing Assy, Vac Fan	1
▲		81838	(000000–)	Housing, Bearing	1
▲		81830	(000000–)	Bearing, Ball	2
▲		81828	(000000–)	Shaft, Fan	1
		83420	(000000–)	Brake Kit, Disc	1
		375210	(000000–)	Filter Package, Dust, Panel, 62 Pleats	1
		81899	(000000–)	Belt, V, Main Brush	1
		57039	(000000–)	Belt, V, Jackshaft Drive	1
		46461	(000000–)	Belt, V, Hyd Pump	1
		81840	(000000–)	Belt, V, Vac Fan	1
		55740	(000000–)	Filter, Oil, Hyd	1
		370808	(000000–)	Sparkplug (Lpg)	1
		385970	(000000–)	Sparkplug (Gas)	1
		373171	(000000–)	Element, Air Filter	1
▽		383715	(000000–)	Kit, Perf, Sweeper, [6100 G/Lp]	1
▲		83189	(000000–)	Kit, Replmt, Knob Assy, [6100]	2
▲▽		83038	(000000–)	Kit, Replmt, Bearing, Vacuum Fan, [6100]	1
▲▲		81838	(000000–)	Housing, Brg, Vacfan	1
▲▲		81830	(000000–)	Bearing, Ball, 0.47b 1.26d 0.39w	2
▲▲		81828	(000000–)	Shaft, Drive, Vacfan	1
▲▲		41722	(000000–)	Washer, 0.52b 0.90d .07, Stl, Pl	1
▲		83420	(000000–)	Kit, Replmt, Stator Assy, Brake, Disc	1
▲		46461	(000000–)	Belt, V, [3v] 25.0l	1
▲		57039	(000000–)	Belt, V, [3v] 49.0l	1
▲		81899	(000000–)	Belt, V, [3v] 32.9l	1
▲		81840	(000000–)	Belt, V, [3l] 61.0l	1
▲		83444	(000000–)	Chain, Roller, #40, 049 Pitches, O–Ring	1
▲		375210	(000000–)	Filter Pkg, Dust, Panel 62plts	1
▲		81748	(000000–)	Skirt, Side, Lh	1
▲		08712	(000000–)	Nut, Hex, Lock, M06 X 1.0, Nl, Ss	10
▲		81715	(000000–)	Skirt, Side, Rh	1
▲		81727	(000000–)	Skirt, Recirculation, Rear	1
▲		361339	(000000–)	Screw, Hex, M06 X 1.0 X 16, Fmg	3
▲		222159	(000000–)	Screw, Hex, M06 X 1.0 X 25, Fmg	1
▲		81725	(000000–)	Skirt, Recirculation	1
▲		360821	(000000–)	Screw, Flt, M08 X 1.25 X 16, 10.9	4
▲		361339	(000000–)	Screw, Hex, M06 X 1.0 X 16, Fmg	4
▲		81726	(000000–)	Skirt, Recirculation, Front	1

IC

Fig. 1 - General Recommended Maintenance Items

Ref.	Tennant Part No.	Machine Serial Number	Description	Qty.
▲	361339	(000000-)	Screw, Hex, M06 X 1.0 X 16, Fmg	5
▲	81740	(000000-)	Skirt, Front	1
▲	08712	(000000-)	Nut, Hex, Lock, M06 X 1.0, Nl, Ss	5
▲	83117	(000000-)	Skirt, Side	2
▲	361339	(000000-)	Screw, Hex, M06 X 1.0 X 16, Fmg	2
▲	30013	(000000-)	Washer, Flat, .31 Fender	4
▲	223470	(000000-)	Screw, Btn, M08 X 1.25 X 25, Ss	2
▲	08713	(000000-)	Nut, Hex, Lock, M08 X 1.25,Nl, Ss	2
▲	81965	(000000-)	Seal, Bulb, .50th, .50w X 09.19l	2
▲	83115	(000000-)	Seal, Bulb, Str, 0.76h .93w 23.5l Adh	1
▲	81966	(000000-)	Seal, Bulb, Str, .38th, 0.75w X 22.6l	1
▽	398328	(000000-)	Kit, Maint, 400hr [6100 Lp] Engine	1
▲	370808	(000000-)	Sparkplug, Lpg [Robn]	1
▲	65870-1	(000000-)	Oil, Hyd, 5/20, 1 Gal	2
▲	373171	(000000-)	Element Set, Fltr, Air [Robn]	1
▲	369585	(000000-)	Filter, Fuel	1
▲	55619	(000000-)	Filter Assy, Oil,Spin-On,[Parker#929161]	1
▽	398327	(000000-)	Kit, Maint, 400hr [6100 G] Engine	1
▲	385970	(000000-)	Sparkplug, Gas [Robn]	1
▲	65870-1	(000000-)	Oil, Hyd, 5/20, 1 Gal	2
▲	373171	(000000-)	Element Set, Fltr, Air [Robn]	1
▲	369585	(000000-)	Filter, Fuel	1
▲	55619	(000000-)	Filter Assy, Oil,Spin-On,[Parker#929161]	1
▽	398326	(000000-)	Kit, Maint, 800hr [6100 G/Lp]	1
▲	83189	(000000-)	Kit, Replmt, Knob Assy, [6100]	1
▲	83119	(000000-)	Kit, Replmt, Skirt [6100]	1
▲	83039	(000000-)	Kit, Seal, Hppr [6100]	1
▲▽	83038	(000000-)	Kit, Replmt, Bearing, Vacuum Fan, [6100]	1
▲▲	81838	(000000-)	Housing, Brg, Vacfan	1
▲▲	81830	(000000-)	Bearing, Ball, 0.47b 1.26d 0.39w	2
▲▲	81828	(000000-)	Shaft, Drive, Vacfan	1
▲▲	41722	(000000-)	Washer, 0.52b 0.90d .07, Stl, Pl	1
▲	83420	(000000-)	Kit, Replmt, Stator Assy, Brake, Disc	1
▲	375210	(000000-)	Filter Pkg, Dust, Panel 62plts	1
▲	81899	(000000-)	Belt, V, [3v] 32.9l	1
▲	57039	(000000-)	Belt, V, [3v] 49.0l	1
▲	46461	(000000-)	Belt, V, [3v] 25.0l	1
▲	81840	(000000-)	Belt, V, [3l] 61.0l	1

Fig. 2 - Replacement Brushes

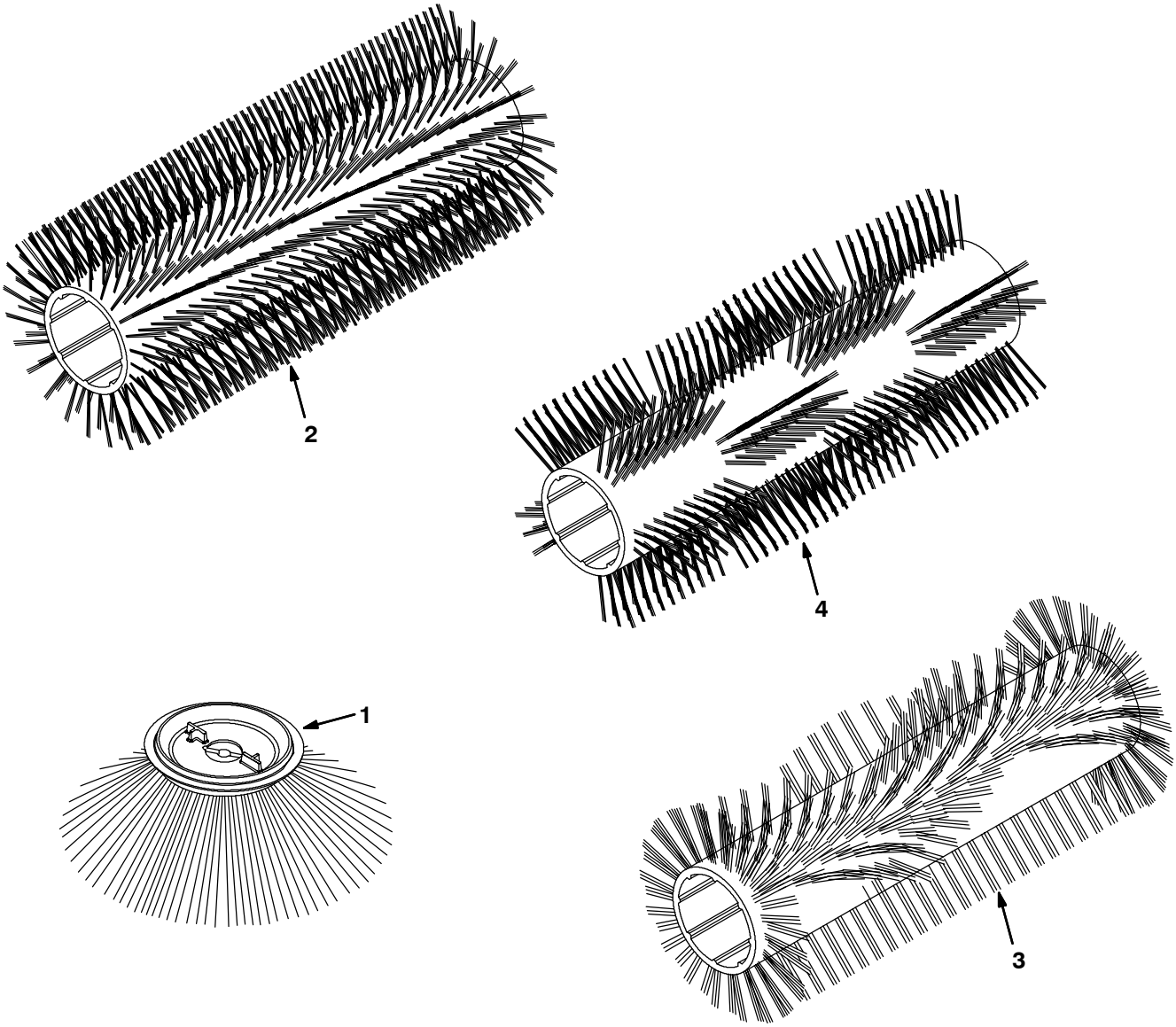

353517 - ALL

Ref.	Tennant Part No.	Machine Serial Number	Description	Qty.
1	80042	(000000-)	Brush-Side Sweep 16.5D Ply (2-Row)	1
1	384473	(000000-)	Brush-Side Sweep 16.5D Ply (3-Row)	1
1	378804	(000000-)	Brush-Side Sweep 17D Stiff Ply	1
2	81888	(000000-)	Brush-Sweep 22Lg Poly	1
2	83031	(000000-)	Brush-Sweep Spl-22Lg-8Sr-Unmx	1
3	83030	(000000-)	Brush-Sweep Spl-22Lg-Wedg-Poly	1
4	370048	(000000-)	Brush, Swp, 22l, Window, Pyp, Spl	1

Fig. 3 - Main Frame Group

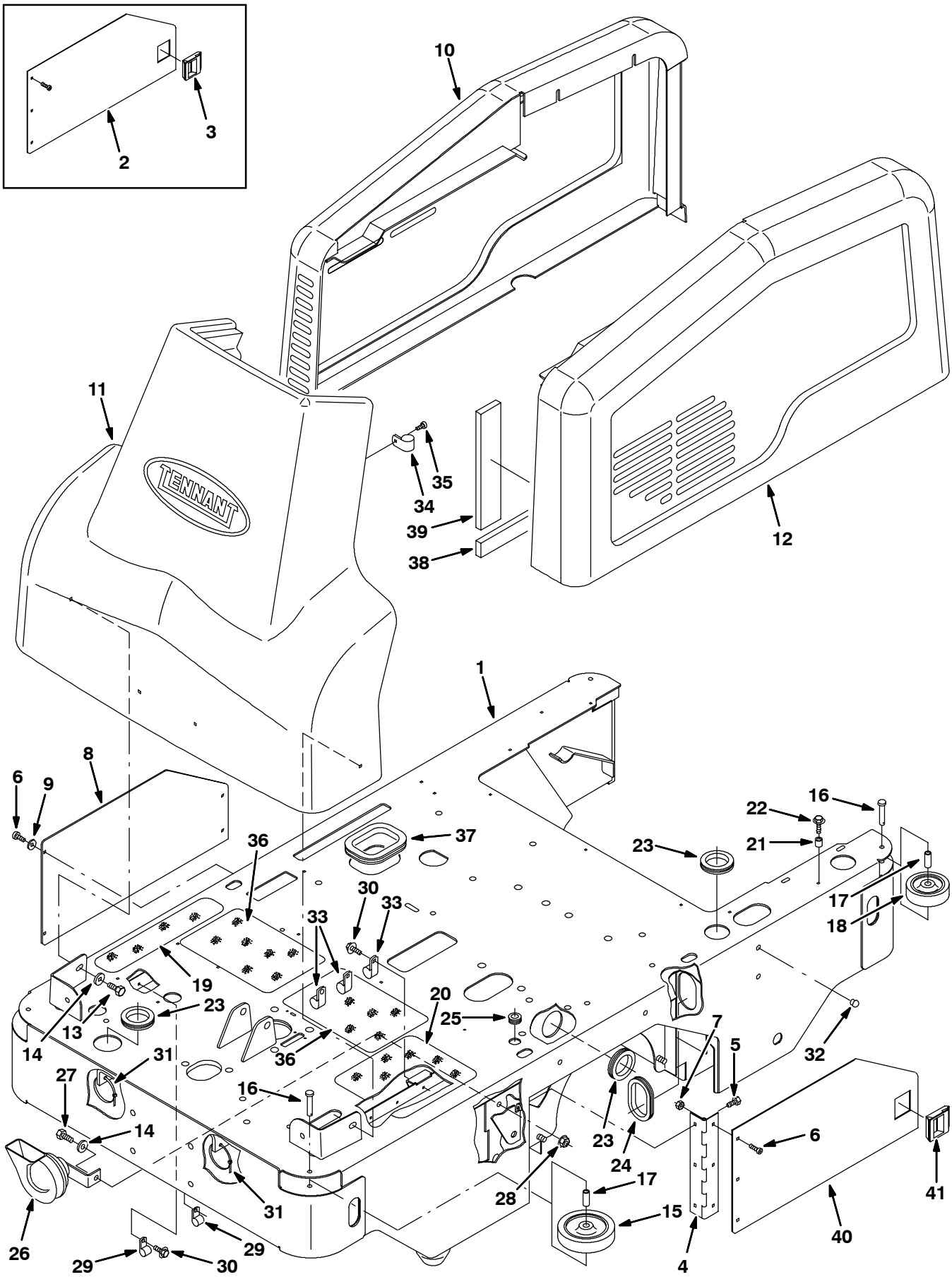

352610 - IC

Fig. 3 - Main Frame Group

Ref.	Tennant Part No.	Machine Serial Number	Description	Qty.
1	81601	(000000-)	Frame Wldt, Main, Sweeper	1
2	384426	(000000-001469)	Kit, Door, Brush	1
3	81855	(000000-001469)	Latch	1
4	81721	(000000-)	Hinge	1
5	87308	(000000-)	Screw, Hex, M06-1.0 X 12, 8.8	7
6	363503	(000000-)	Screw, Pan, M06-1.0 X 12, Ss	3
7	08712	(000000-)	Nut, Hex, Lock, M06-1.0, Nl,Ss	6
8	81779	(000000-)	Plate, Door, Brush	1
9	32483	(000000-)	Washer, Flat, .25 Sae	4
10	81554	(000000-)	Shroud, R.H.	1
11	83157	(000000-)	Shroud, Front, 6100	1
12	83158	(000000-)	Shroud, Left, 6100 Ic	1
13	16735	(000000-)	Screw, Hex, M08-1.25 X 16, 8.8	4
14	32491	(000000-)	Washer, Flat, .31 Hard	5
15	81580	(000000-)	Wheel, Bumper, 4 In Dia	2
16	81581	(000000-)	Pin, Clevis, .31 Dia X 1.75 Lg	4
17	393129	(000000-)	Sleeve, P/M, 0.437d 0.318b 1.15l 430ss	4
18	81582	(000000-)	Wheel, Bumper 3.0 Od	2
19	82839	(000000-)	Pad	1
20	16368	(000000-)	Tread, Floor	1
21	222460	(000000-)	Sleeve	1
22	222159	(000000-)	Screw, Hex, Fmg, M06-1.0 X 25	1
23	54345	(000000-)	Grommet, Rubber	3
24	62595-16	(000000-)	Molding, Trim 8.50	1
25	10632-9	(000000-)	Grommet, Rubber	1
26	369704	(000000-)	Horn	1
27	16931	(000000-)	Screw, Hex, M08-1.25 X 20, 8.8	1
28	07791	(000000-)	Nut, Hex, Flange, M08-1.25	1
29	26395-1	(000000-)	Clamp, Cable	2
30	361339	(000000-)	Screw, Hex 6X 1.0 16 Pltd	5
31	49266	(000000-)	Tie, Cable 1.75D Max 7.50Lg	2
32	01314	(000000-)	Button, Plug	6
33	40678-1	(000000-)	Clamp, Cable	3
34	56094	(000000-)	Clamp, Cable	1
35	360973	(000000-)	Screw, Pan, #12- X 0.50,	1
36	32646	(000000-)	Floor Tread, Anti-Slip	2
37	62595-5	(000000-)	Molding, Trim 11-14Ga 11.50	1
38	81979	(000000-)	Insulation, Sound Foam	1
39	81992	(000000-)	Insulation, Sound Foam	1
40	384416	(001470-)	Plate, Door, Brush	1
41	384423	(001470-)	Latch	1

Fig. 4 - Seat and Shroud Group

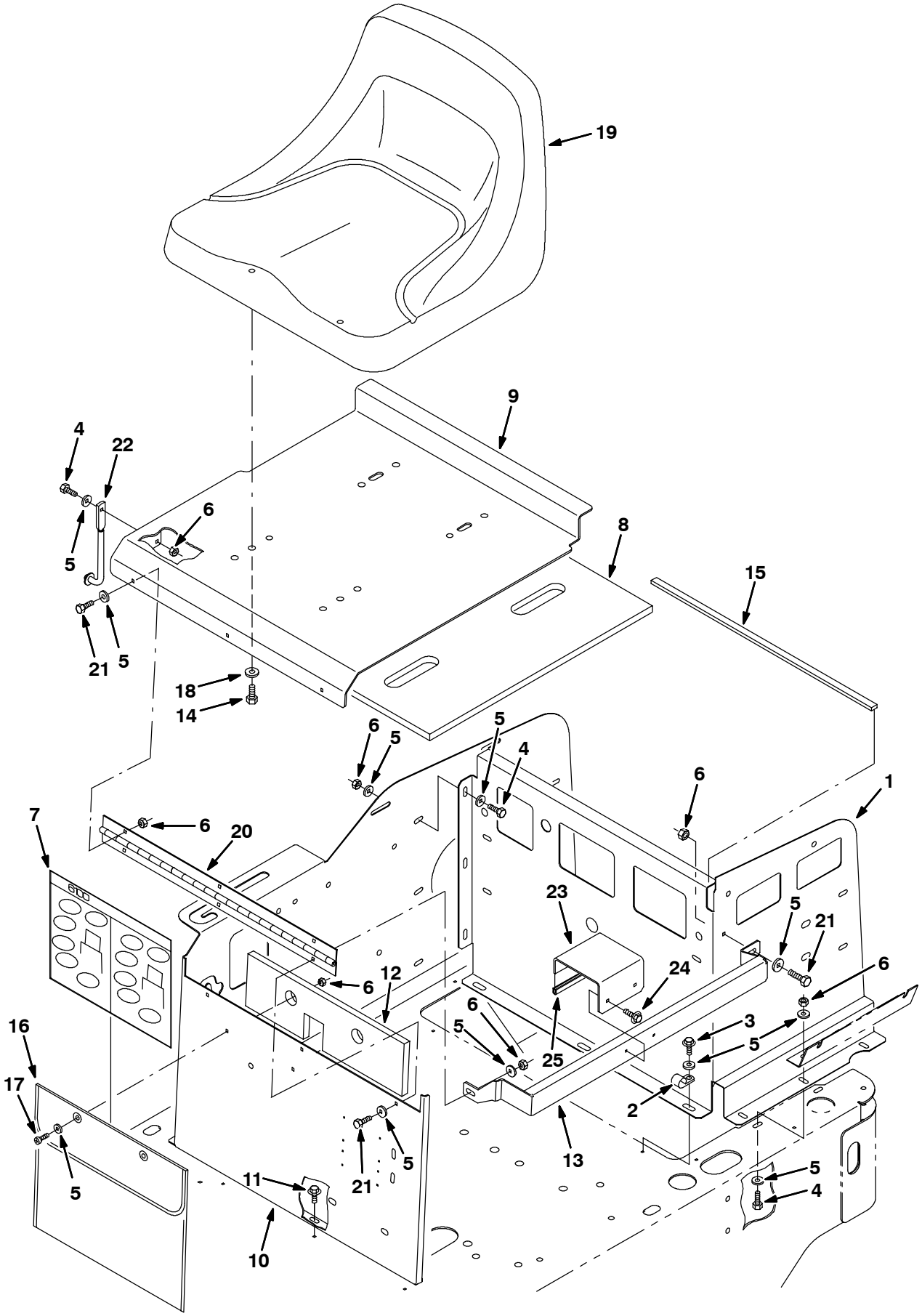

352613 - IC, NA

Fig. 4 - Seat and Shroud Group

Ref.	Tennant Part No.	Machine Serial Number	Description	Qty.
1	81567	(000000-)	Lintel Wldt, Rear, Ic	1
2	40678-1	(000000-)	Clamp, Cable	1
3	222158	(000000-)	Screw, Hex, Fmg, M06-1.0 X 10	4
4	06943	(000000-)	Screw, Hex, M06-1.0 X 20, 8.8	6
5	32490	(000000-)	Washer, Flat, .25 Hard	27
6	08708	(000000-)	Nut, Hex, Lock, M06-1.0, Nl	15
7	83122	(000000-)	Instruction, Use And Care, 6100	1
8	83505	(000000-)	Insulation, Sound Foam	1
9	81971	(000000-)	Plate Wldt, Seat, Ic	1
10	81690	(000000-)	Panel, Seat Support, Ic W/Label	1
11	74455	(000000-)	Screw, Hex, Fmg, M06-1.0 X 12	8
12	81996	(000000-)	Insulation, Sound Foam	1
13	81909	(000000-)	Brace, Seat Support	1
14	54396	(000000-)	Screw, Hex, .31-18 X 0.75, G5	4
15	81912	(000000-)	Seal, Foam Rbr .25 X .50 X .20	1
16	68275	(000000-)	Pouch	1
17	09145	(000000-)	Screw, Pan, M06-1.0 X 16, 4.8	2
18	32491	(000000-)	Washer, Flat, .31 Hard	4
19	375411	(000000-)	Seat	1
20	81902	(000000-)	Hinge, Seat Support	1
21	06942	(000000-)	Screw, Hex, M06-1.0 X 16, 8.8	7
22	223080	(000000-)	Rod, Propelling	1
23	384404	(000000-)	Bracket, Engine Module (Lpg Only)	1
24	361339	(000000-)	Screw, Hex 6 X 1.0 16 Pltd (Lpg Only)	2
25	31775	(000000-)	Molding, Trim, 11-14 Ga, 4.0 (Lpg Only)	1

Fig. 5 - Steering Group

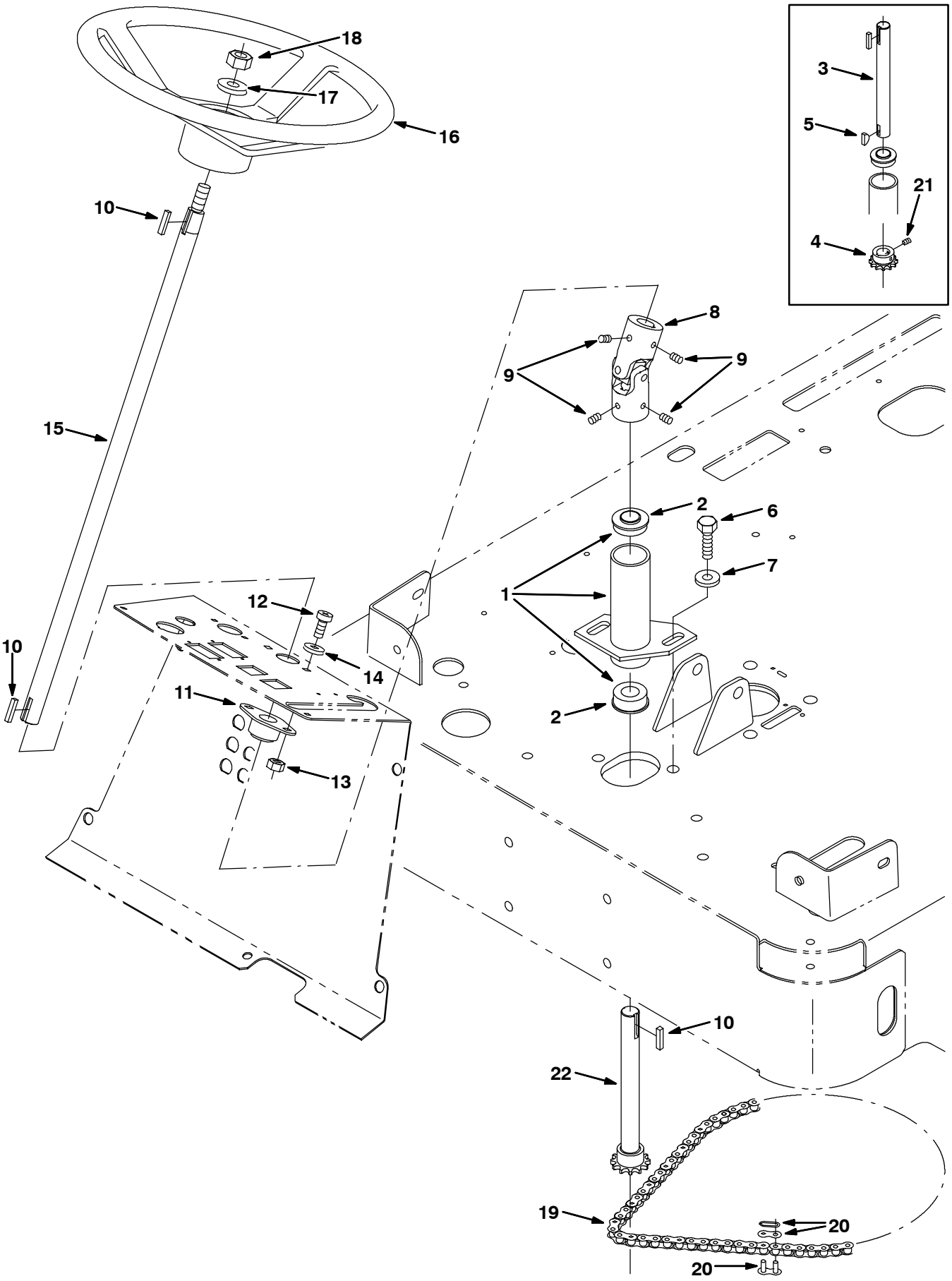

352105 – ALL

Fig. 5 - Steering Group

	Ref.	Tennant Part No.	Machine Serial Number	Description	Qty.
▽	1	83112	(000000–)	Housing Assy, Bearing	1
▲	2	223073	(000000–)	Bearing, Flange	2
	3	223068	(000000–002339)	Shaft, Steering (Replaced by 391401)	1
	4	223070	(000000–002339)	Sprocket, Steering	1
	5	00500–10	(000000–002339)	Key, Woodruff	1
	6	03192	(000000–)	Screw, Hex, M10–1.5 X 30, 8.8	2
	7	41187	(000000–)	Washer, Belleville, .38	2
▽	8	223072	(000000–)	Joint U	1
▲	9	39338	(000000–)	Screw, Set, .31–18 X 0.50, Soc	4
	10	00912	(000000–)	Key, Square	3
	11	223065	(000000–)	Bearing, Flange	1
	12	09737	(000000–)	Screw, Pan, M08–1.25X 20, 4.8	2
	13	08709	(000000–)	Nut, Hex, Lock, M08–1.25,Nl	2
	14	39349	(000000–)	Washer, Flat, .31 Sae	2
	15	223061	(000000–)	Shaft, Steering	1
	16	223075	(000000–)	Wheel, Steering	1
	17	32493	(000000–)	Washer, Flat, .50 Hard	1
	18	08711	(000000–)	Nut, Hex, Lock, M12–1.75,Nl	1
	19	83113	(000000–)	Chain, Roller #35, .375 Pitch	1
	20	14799	(000000–)	Link, Chain	1
	21	39326	(000000–002339)	Screw, Set, .25 –20 X .25	2
	22	391401	(002340–)	Shaft, W/ Sprocket, Steering	1

Fig. 6 - Instrument Panel Group

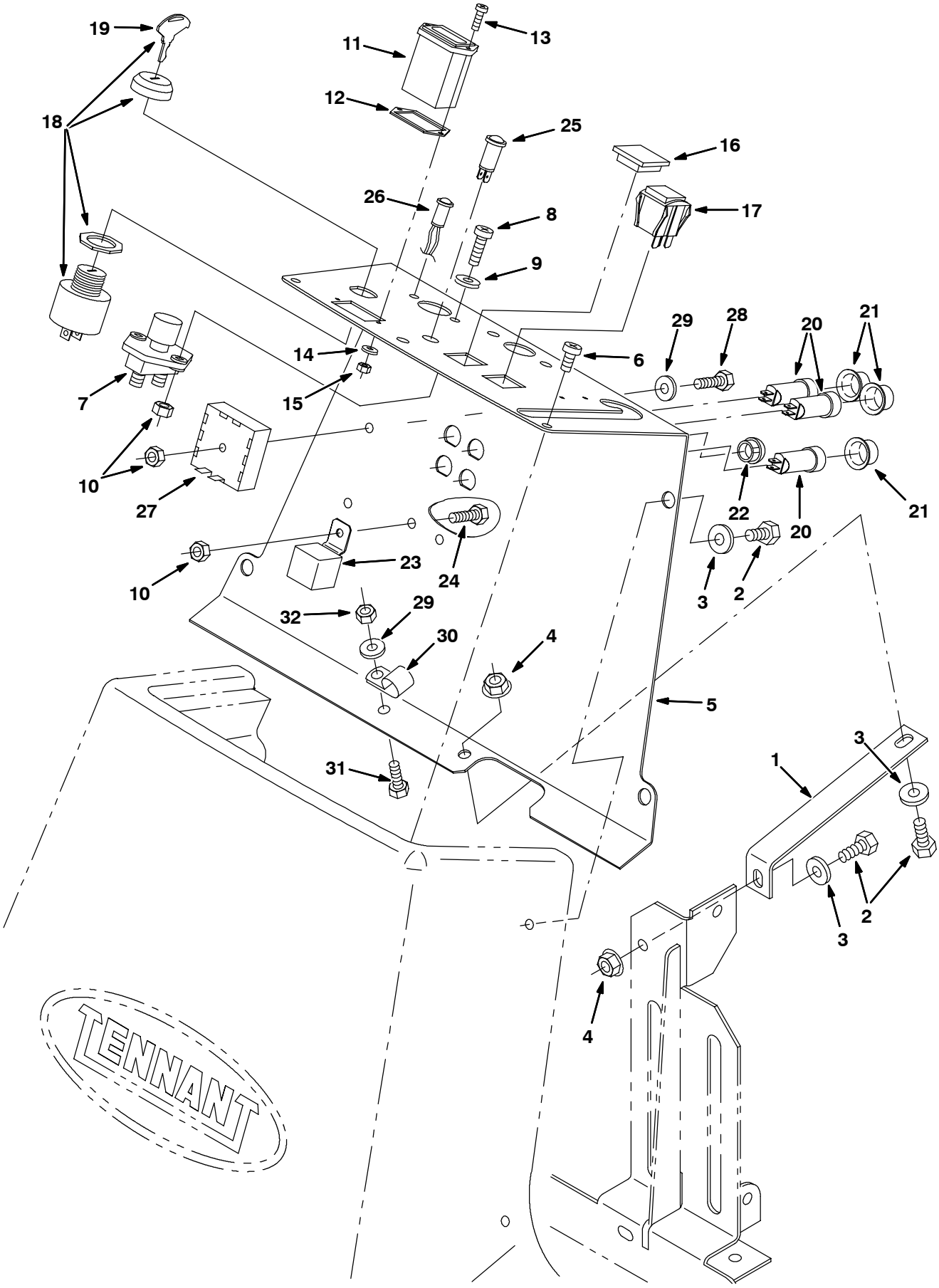

352615 - IC

Fig. 6 - Instrument Panel Group

	Ref.	Tennant Part No.	Machine Serial Number	Description	Qty.
	1	83528	(000000-)	Angle, Brace	1
	2	16735	(000000-)	Screw, Hex, M08-1.25 X 16, 8.8	6
	3	32491	(000000-)	Washer, Flat, .31 Hard	6
	4	07791	(000000-)	Nut, Hex, Flange, M08-1.25	2
	5	83173	(000000-)	Console, Instrument, Ic	1
	6	360973	(000000-)	Screw, Pan, #12- X 0.50,	2
	7	44078	(000000-)	Switch, Pushmom, Spst100A 12V	1
	8	09164	(000000-)	Screw, Pan, M06-1.0 X 20, 4.8	2
	9	19066	(000000-)	Washer, Flat, #10	2
	10	08708	(000000-)	Nut, Hex, Lock, M06-1.0, Nl	4
	11	31988	(000000-)	Hourmeter, Electronic	1
	12	222683	(000000-)	Gasket	1
	13	09146	(000000-)	Screw, Pan, M03-0.5 X 12, 4.8	4
	14	39658	(000000-)	Washer, Lock, Int, #04	4
	15	01754	(000000-)	Nut, Hex, Std, M03-0.5	4
	16	222534	(000000-)	Plug	1
	17	383831	(000000-)	Switch, Rocker, Mom, On-Off, D	1
▽	18	80331	(000000-)	Switch,	1
▲	19	80181	(000000-)	Key Set	1
	20	57803	(000000-)	Circuitbreaker, 15 A	3
	21	57751	(000000-)	Boot	3
	22	57167	(000000-)	Button, Plug	1
	23	57804	(000000-)	Relay, 12V 40 A, SPDT	1
	24	09145	(000000-)	Screw, Pan, M06-1.0 X 16, 4.8	1
	25	34820	(000000-)	Light, Indctr/Red 12V	1
	26	80173	(000000-)	Light, Oil (Gas)	1
	26	373195	(000000-)	Light, Oil (LPG)	1
	27	379665	(000000-)	Module, Shaker, 12V	1
	28	33944	(000000-)	Screw, Pan, M06-1.0 X 35, 4.8	1
	29	32483	(000000-)	Washer, Flat, .25 Sae	2
	30	07471	(000000-)	Clamp, Cable	1
	31	06943	(000000-)	Screw, Hex M6	1
	32	07790	(000000-)	Nut, Flange M6	1

Fig. 7 - Engine Group, Gas

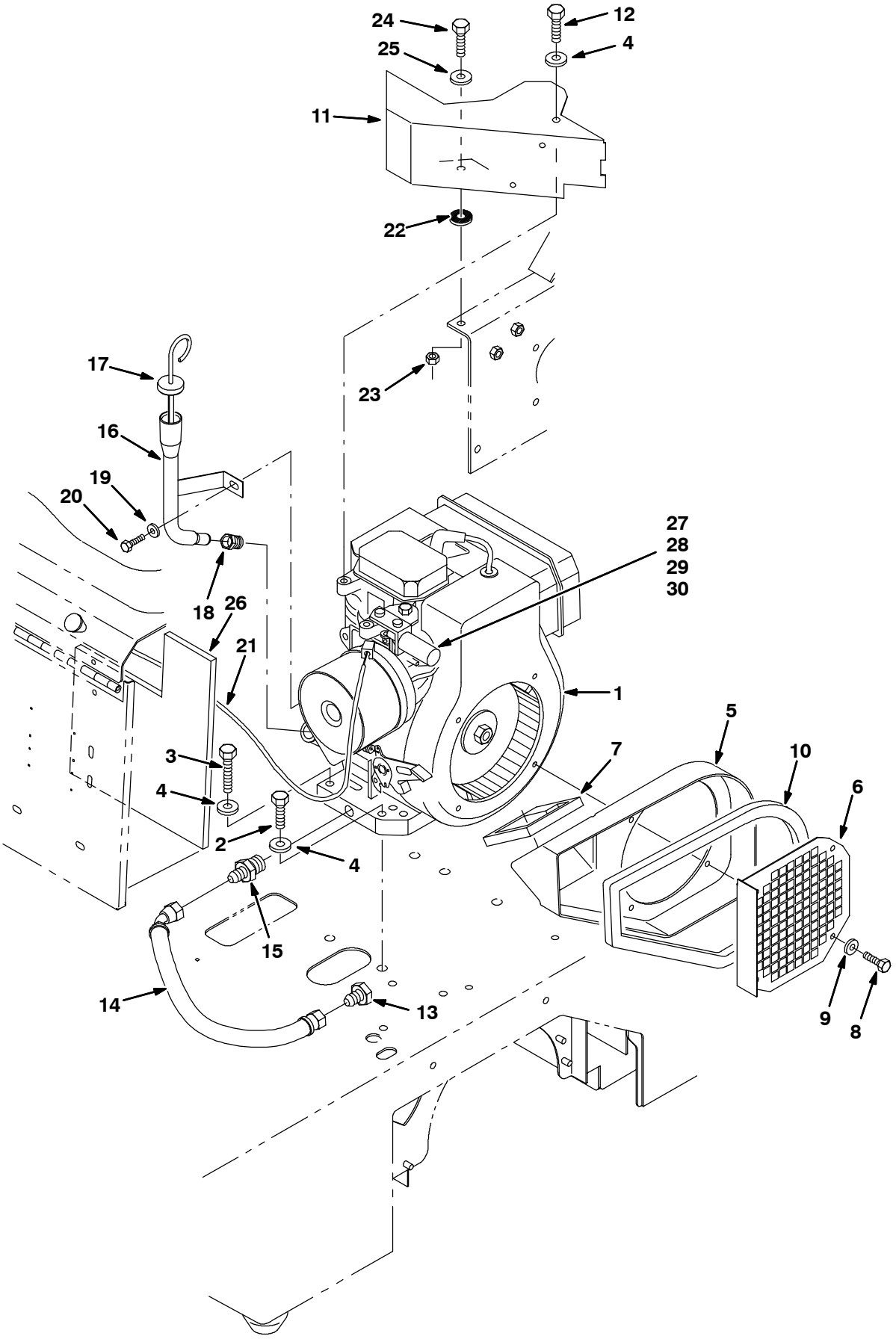

352640 - G

Fig. 7 - Engine Group, Gas

Ref.	Tennant Part No.	Machine Serial Number	Description	Qty.
1	83300	(000000-)	Engine-11Hp Gas (See Engine Breakdown)	1
2	39285	(000000-)	Screw, Hex, M10-1.5 X 40, 8.8	2
3	16930	(000000-)	Screw, Hex, M10-1.5 X 50, 8.8	1
4	32492	(000000-)	Washer, Flat, .38 Hard	4
5	83483	(000000-)	Panel, Baffle, Air Intake	1
6	83482	(000000-)	Screen	1
7	83495	(000000-)	Gasket, Air Intake	1
8	11635	(000000-)	Screw, Hex, M06-1.0 X 12, Ss	4
9	01684	(000000-)	Washer, Flat, .25 Ss	4
10	83496	(000000-)	Seal, Bulb, 41.1 Lg.	1
11	83532	(000000-)	Duct, Air, Engine	1
12	58286	(000000-)	Screw-Hex M10X1.25 20 8.8 Pltd	1
13	19747	(000000-)	Fitting, Hyd, Plug	1
14	83385	(000000-)	Hose, Hyd	1
15	19200	(000000-)	Fitting, Hyd, Str	1
16	81694	(000000-)	Tube, Fill	1
17	81695	(000000-)	Dipstick	1
18	81692	(000000-)	Fitting, Tube End	1
19	32490	(000000-)	Washer, Flat, .25 Hard	1
20	06960	(000000-)	Screw, Hex M10	1
21	53140	(000000-)	Cable Assy,Choke 37.00LG	1
22	222268	(000000-)	Washer, Rubber	1
23	07791	(000000-)	Nut, Hex Flange, M8	1
24	39277	(000000-)	Screw, Hex M8	1
25	32491	(000000-)	Washer, Flat, .31 Hard	1
26	384443	(000000-)	Insulation, Sound Foam	1
27	384448	(000000-)	Soleniod, 12vdc, Engine	1
28	383820	(000000-)	Terminal, Bullet, .156m 18/22awg	2
29	87308	(000000-)	Screw, Hex, M06 X 1.0 X 12, 8.8	2
30	32982	(000000-)	Washer, Lock, Int, .25	2

Fig. 8 - Fuel Line Group, Gas

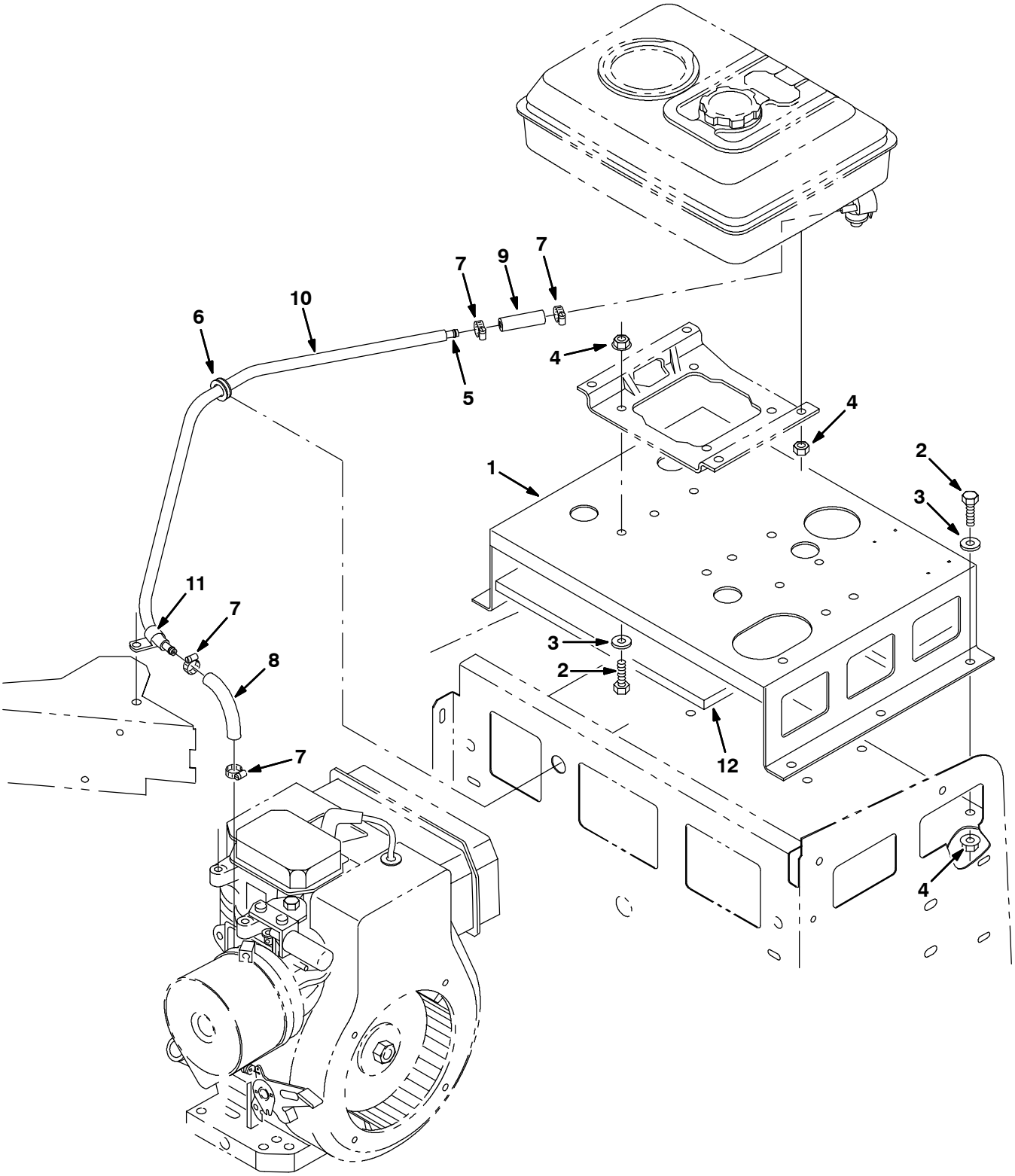

352687 - G

Fig. 8 - Fuel Line Group, Gas

Ref.	Tennant Part No.	Machine Serial Number	Description	Qty.
1	81558	(000000-)	Bracket, Vacuum Box	1
2	16735	(000000-)	Screw, Hex, M08-1.25 X 16, 8.8	10
3	39349	(000000-)	Washer, Flat, .31 Sae	10
4	07791	(000000-)	Nut, Hex, Flange, M08-1.25	10
5	83387	(000000-)	Tube, Fuelline	1
6	10632-4	(000000-)	Grommet, Rubber	1
7	43844	(000000-)	Clamp, Wormdrive	4
8	81584	(000000-)	Hose, Fuel, .31Id 5.0L	1
9	57404	(000000-)	Hose, Fuel	1
10	81585	(000000-)	Hose, Fuel, .38Id 24.0L	1
11	82829	(000000-)	Clamp, Cable, 0.63D 0.75W STL	1
12	81574	(000000-)	Insulation, Heat	1

Fig. 9 - Engine Group, LPG

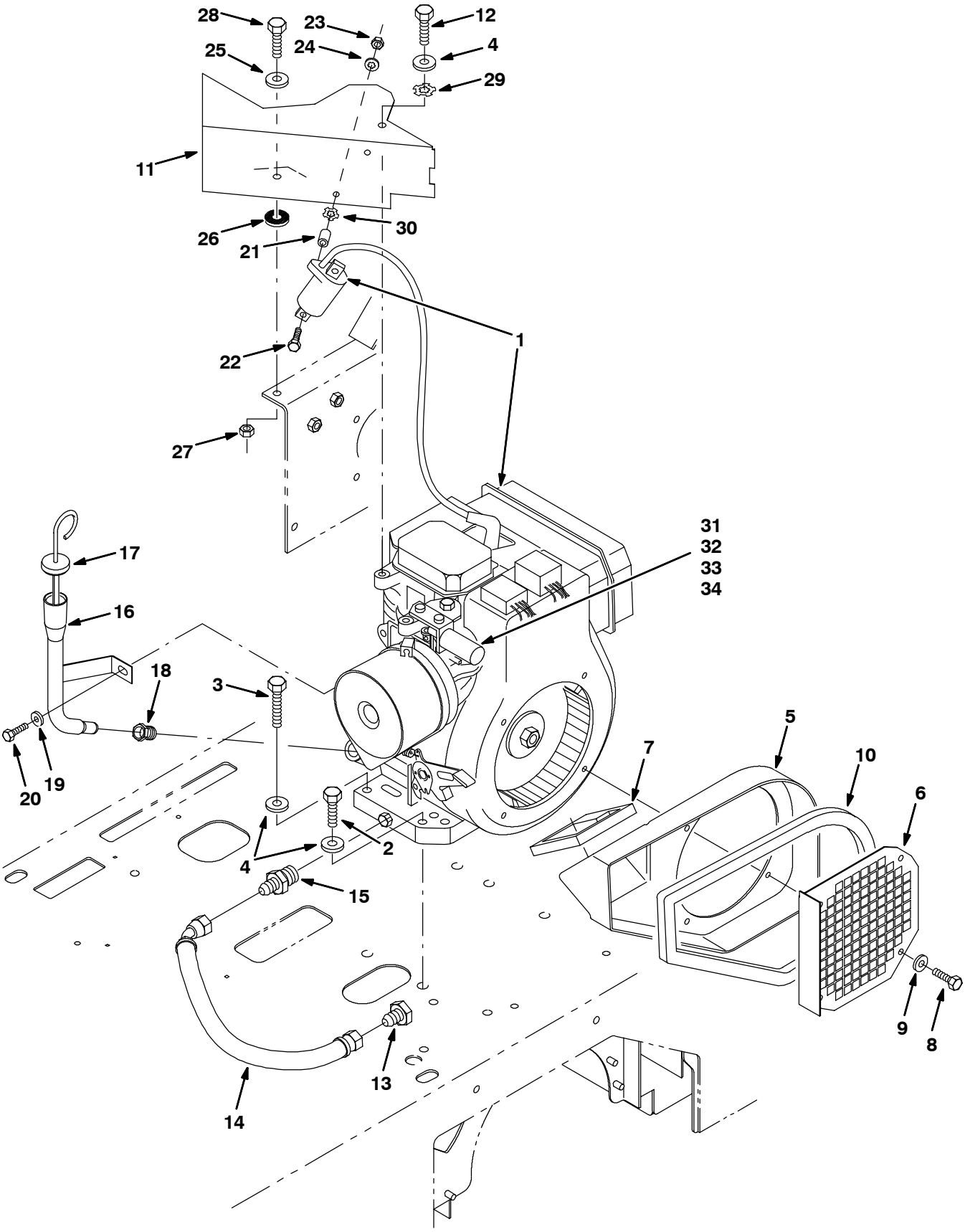

352689 - LP

Fig. 9 - Engine Group, LPG

Ref.	Tennant Part No.	Machine Serial Number	Description	Qty.
1	83301	(000000-)	Engine, Robn Eh34 Lpg (See Engine Breakdown)	1
2	39285	(000000-)	Screw, Hex, M10-1.5 X 40, 8.8	3
3	16930	(000000-)	Screw, Hex, M10-1.5 X 50, 8.8	1
4	32492	(000000-)	Washer, Flat, .38 Hard	5
5	83483	(000000-)	Panel, Baffle, Air Intake	1
6	83482	(000000-)	Screen	1
7	83495	(000000-)	Gasket, Air Intake	1
8	11635	(000000-)	Screw, Hex, M06-1.0 X 12, Ss	4
9	01684	(000000-)	Washer, Flat, .25 Ss	4
10	83496	(000000-)	Seal, Bulb, 41.1 Lg.	1
11	83532	(000000-)	Duct, Air, Engine	1
12	58286	(000000-)	Screw-Hex M10X1.25 20 8.8 Pltd	1
13	19747	(000000-)	Fitting, Hyd, Plug	1
14	83385	(000000-)	Hose, Hyd	1
15	19200	(000000-)	Fitting, Hyd, Str	1
16	81694	(000000-)	Tube, Fill	1
17	81695	(000000-)	Dipstick	1
18	81692	(000000-)	Fitting, Tube End	1
19	32490	(000000-)	Washer, Flat, .25 Hard	1
20	06960	(000000-)	Screw, Hex M10	1
21	360930	(000000-)	Tube	2
22	06947	(000000-)	Screw, Hex M6	2
23	07790	(000000-)	Nut, Hex Flange, M6	2
24	07515	(000000-)	Washer, Lock	2
25	32491	(000000-)	Washer, Flat, .31 Hard	1
26	222268	(000000-)	Washer, Rubber	1
27	07791	(000000-)	Nut, Hex Flange, M8	1
28	39277	(000000-)	Screw, Hex M8	1
29	41142	(000000-)	Washer, Lock, Int-Ext, .38	1
30	41140	(000000-)	Washer, Lock, Int-Ext, .25	1
31	384448	(000000-)	Soleniod, 12vdc, Engine	1
32	383820	(000000-)	Terminal, Bullet, .156m 18/22awg	2
33	87308	(000000-)	Screw, Hex, M06 X 1.0 X 12, 8.8	2
34	32982	(000000-)	Washer, Lock, Int, .25	2

Fig. 10 - Vaporizer Group, LPG

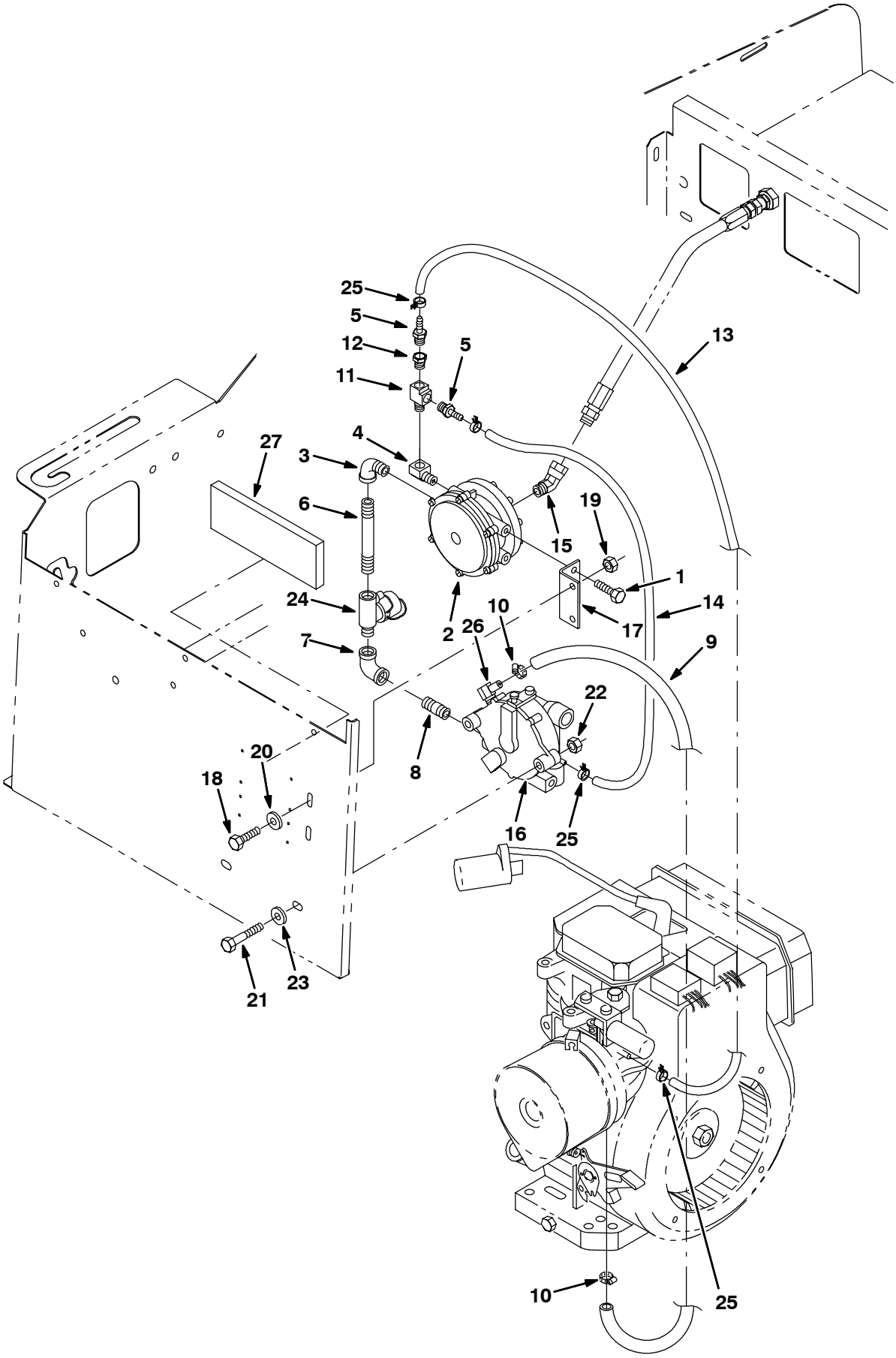

352636 - LP

Fig. 10 - Vaporizer Group, LPG

	Ref.	Tennant Part No.	Machine Serial Number	Description	Qty.
	1	19315	(000000-)	Screw, Hex, .25-20 X 0.50, G5	2
▽	2	73020	(000000-)	Filter, Fuelock	1
▲		65527	(000000-)	Fuelock Replacement Kit	1
	3	81975	(000000-)	Fitting, Pipe, Elbow90	1
	4	11984	(000000-)	Fitting, Elbow	1
	5	40607	(000000-)	Fitting, Brass, Str	2
	6	81973	(000000-)	Fitting, Pipe, Nipple, .25 Pt	1
	7	81976	(000000-)	Fitting, Pipe, E90 Pf04/Pf04	1
	8	10770	(000000-)	Fitting, Pipe	1
	9	383852	(000000-)	Hose, Lpg, Low Pressure, .375I	1
	10	86824	(000000-)	Clamp, Wormdrive	2
	11	26426	(000000-)	Fitting, Tee PF02/PM02/PM02	1
	12	80637	(000000-)	Valve, Check	1
	13	07464	(000000-)	Hose, Vacuum	1
	14	19774	(000000-)	Hose, Vacuum	1
	15	47720	(000000-)	Fitting, Elbow PM04/PF04	1
	16	83349	(000000-)	Regulator	1
	17	83527	(000000-)	Angle, Fuellock Mount	1
	18	06942	(000000-)	Screw, Hex, M06-1.0 X 16, 8.8	2
	19	07790	(000000-)	Nut, Hex, Flange, M06-1.0	2
	20	32490	(000000-)	Washer, Flat, .25 Hard	2
	21	06957	(000000-)	Screw, Hex, M08-1.25 X 60,8.8	2
	22	07791	(000000-)	Nut, Hex, Flange, M08-1.25	2
	23	32491	(000000-)	Washer, Flat, .31 Hard	2
	24	30181	(000000-)	Lock, LP Fuel	1
	25	384032	(000000-)	Clamp, Hose	4
	26	384286	(000000-)	Fitting, Brass, E90	1
	27	384447	(000000-)	Insulation, Sound Foam	1

Fig. 11 - Fuel Tank Group, LPG

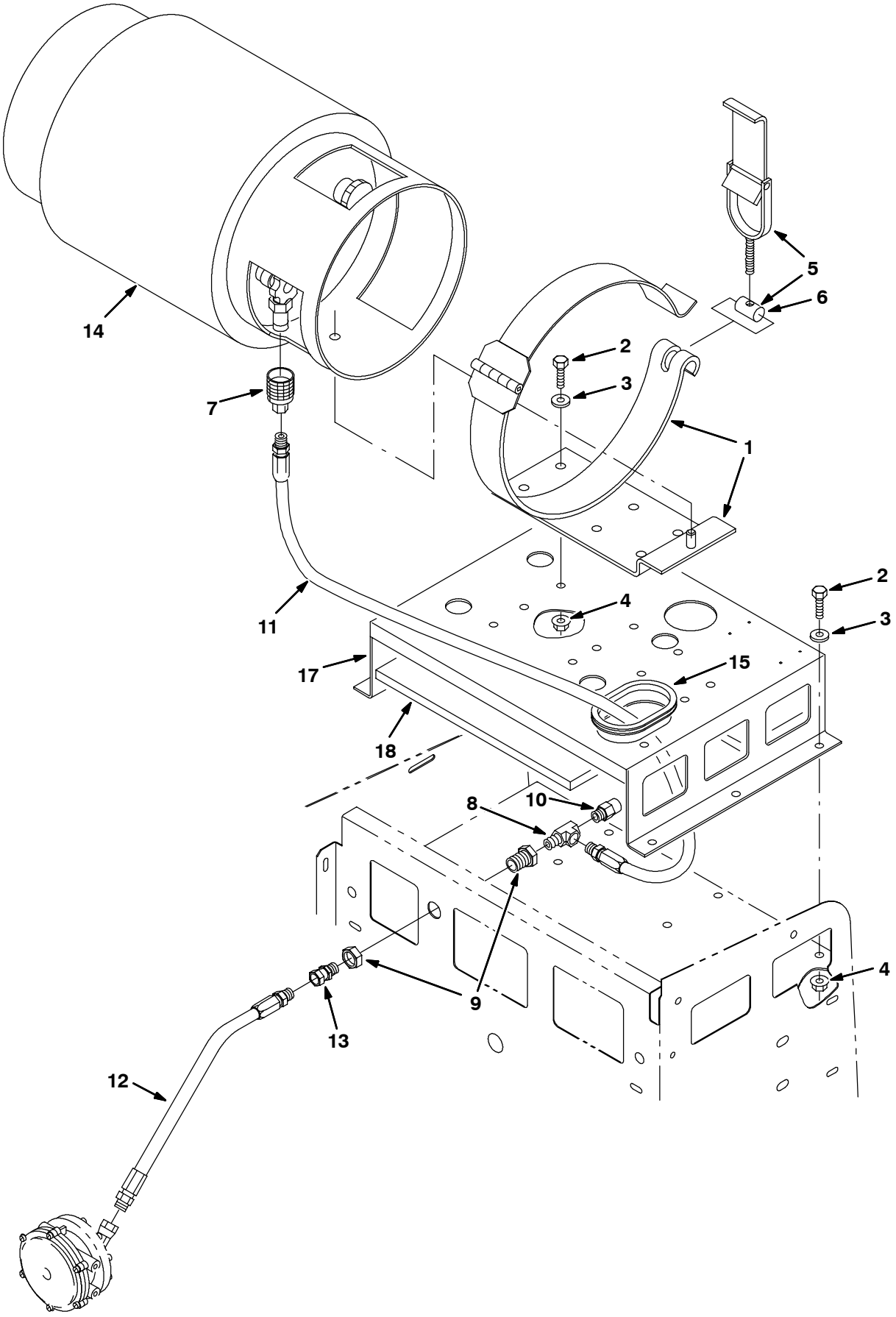

352638 - LP, NA

Fig. 11 - Fuel Tank Group, LPG

	Ref.	Tennant Part No.	Machine Serial Number	Description	Qty.
	1	81557	(000000-)	Bracket, Tank, Lpg	1
	2	16931	(000000-)	Screw, Hex, M08-1.25 X 20, 8.8	12
	3	39349	(000000-)	Washer, Flat, .31 Sae	12
	4	07791	(000000-)	Nut, Hex, Flange, M08-1.25	12
▽	5	53400-1	(000000-)	Latch Assy, Lpg Tank Mtg,W/Nut	1
▲	6	53400-4	(000000-)	Nut	1
	7	26496	(000000-)	Coupling	1
	8	24929	(000000-)	Fitting, Brass, Tee	1
	9	78122	(000000-)	Fitting, Bkhd	1
	10	24047	(000000-)	Valve, Press Relief, Lpg Rego	1
	11	365029	(000000-)	Hose, Lpg	1
	12	10754	(000000-)	Hose, Lpg	1
	13	11442-23	(000000-)	Fitting, Str	1
	14	10752-2	(000000-)	Tank-Lp,20#,Vap,Both,Fill Ga L	1
	15	57570	(000000-)	Molding, Trim	1
	16	81574	(000000-)	Insulation, Heat	1
	17	81558	(000000-)	Bracket, Vacuum Box	1
	18	81574	(000000-)	Insulation, Heat	1

Fig. 12 - Muffler Group

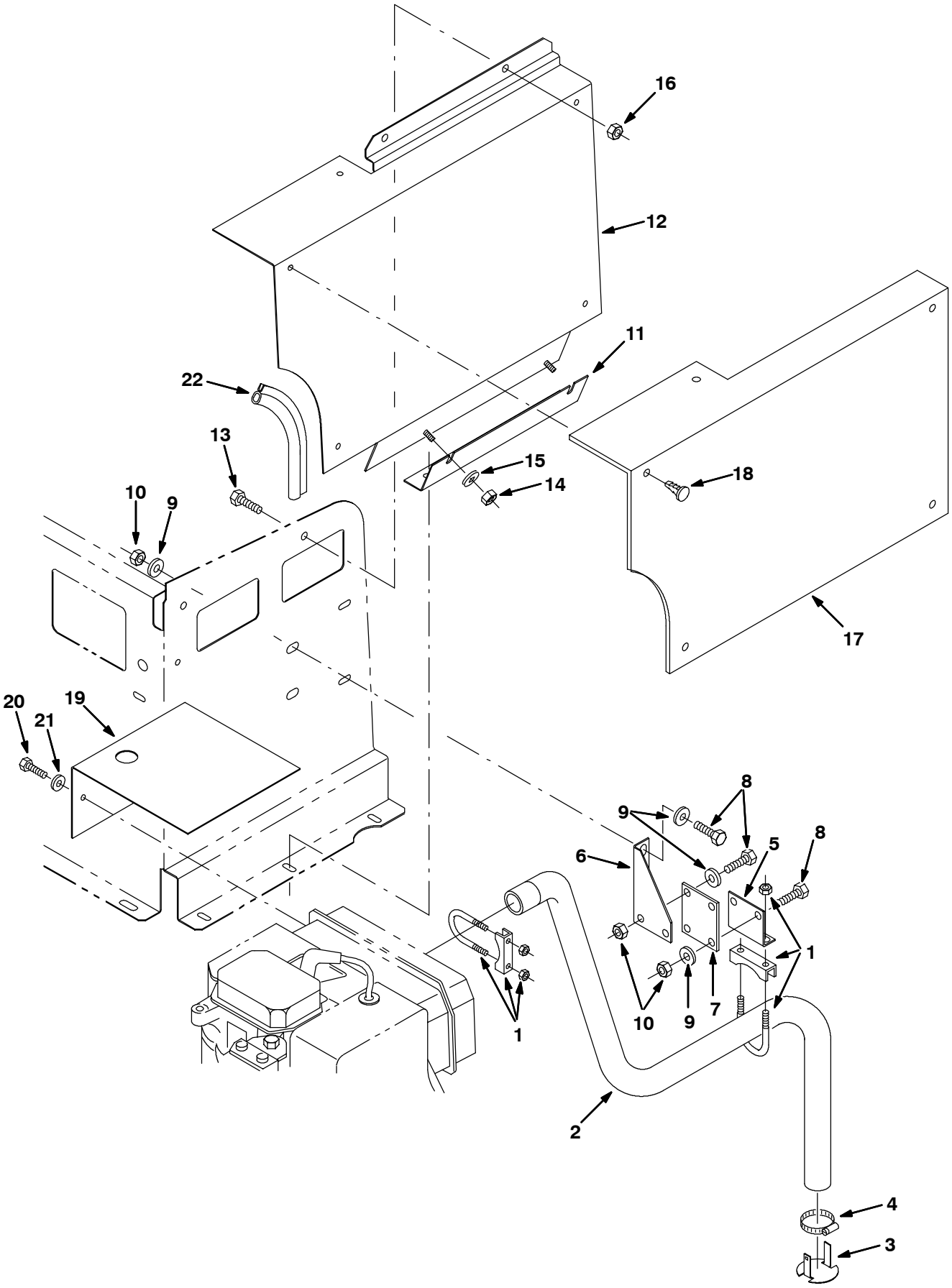

352646 - IC

Fig. 12 - Muffler Group

Ref.	Tennant Part No.	Machine Serial Number	Description	Qty.
1	36033	(000000–)	Clamp	2
2	83488	(000000–)	Pipe, Exhaust, Tail	1
3	83513	(000000–)	Plate, Baffle, Exhaust	1
4	11399	(000000–)	Clamp, Wormdrive	1
5	83491	(000000–)	Angle, Muffler Hanger	1
6	83492	(000000–)	Angle, Muffler Support	1
7	83493	(000000–)	Isolator, Rubber, Muffler	1
8	16735	(000000–)	Screw, Hex, M08–1.25 X 16, 8.8	6
9	39349	(000000–)	Washer, Flat, .31 Sae	8
10	08709	(000000–)	Nut, Hex, Lock, M08–1.25,Nl	6
11	83511	(000000–)	Bracket, Heat Shield	1
12	83510	(000000–)	Panel, Heat Shield	1
13	16735	(000000–)	Screw, Hex, M08–1.25 X 16, 8.8	2
14	08708	(000000–)	Nut, Hex, Lock, M06–1.0, Nl	2
15	32483	(000000–)	Washer, Flat, .25 Sae	2
16	07791	(000000–)	Nut, Hex, Flange, M08–1.25	2
17	83512	(000000–)	Insulation, Heat	1
18	84086	(000000–)	Clip, Christmas Tree	5
19	83393	(000000–)	Plate, Deflector, Heat	1
20	87308	(000000–)	Screw, Hex, M06–1.0 X 12, 8.8	1
21	32483	(000000–)	Washer, Flat, .25 Sae	1
22	367573	(000000–)	Seal, Bulb	1

Fig. 13 - Battery Group

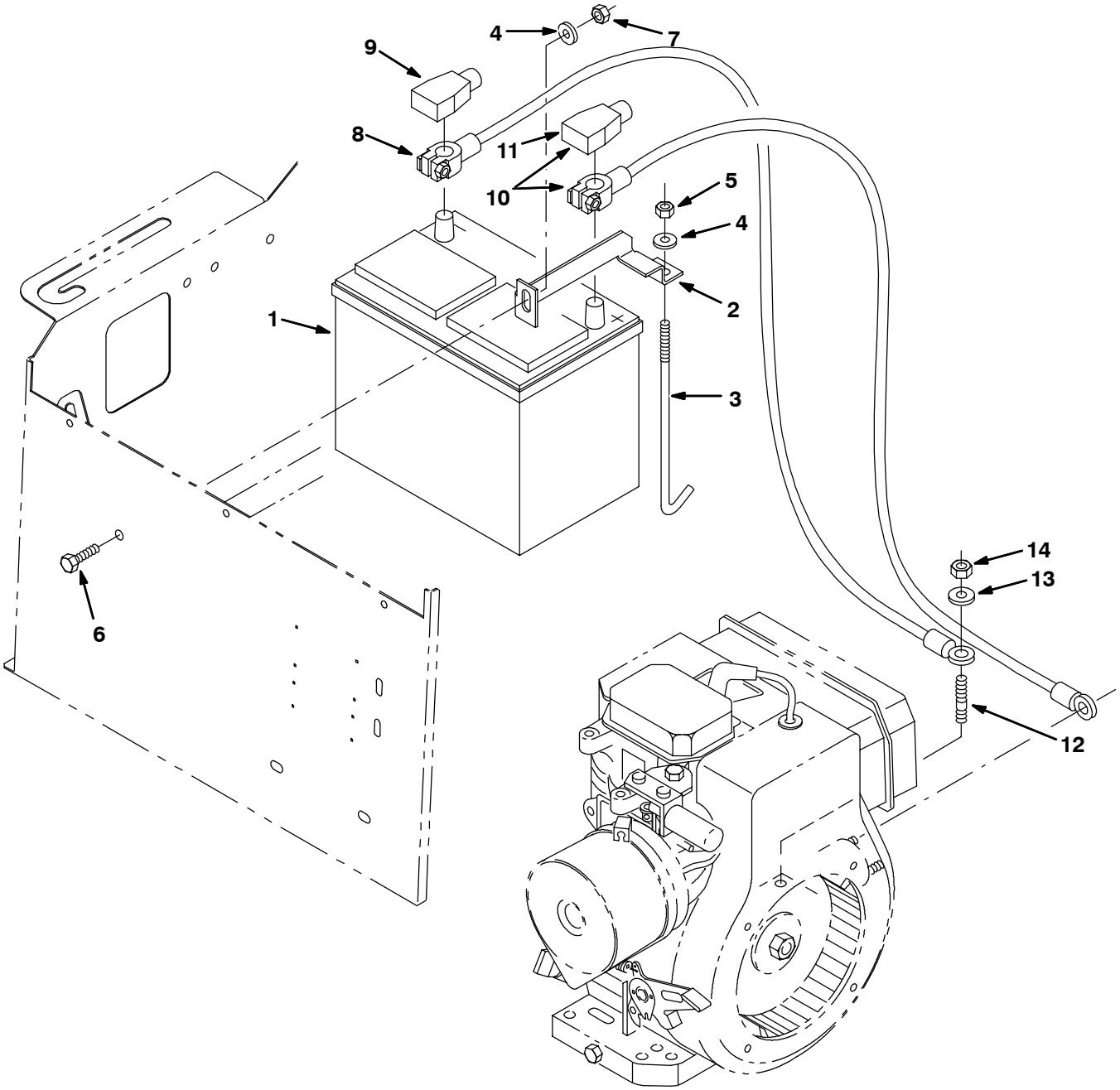

352648 - IC, NA

Fig. 13 - Battery Group

	Ref.	Tennant Part No.	Machine Serial Number	Description	Qty.
	1	10137	(000000-)	Battery, 12V, Wet	1
	2	83508	(000000-)	Bracket, Clamp, Battery	1
	3	13015-1	(000000-)	Bolt, Holddown, 10.0 Long	1
	4	32491	(000000-)	Washer, Flat, .31 Hard	2
	5	32983	(000000-)	Nut, Hex, Lock, .31-18, Nl	1
	6	39277	(000000-)	Screw, Hex, M08-1.25 X 25, 8.8	1
	7	08709	(000000-)	Nut, Hex, Lock, M08-1.25,Nl	1
	8	57345	(000000-)	Wire Assy, Elect,Batt.Neg.	1
	9	68872	(000000-)	Boot	1
▽	10	83526	(000000-)	Cable, Battery, Pos 6Ga 25.Ol	1
▲	11	68873	(000000-)	Boot	1
	12	384442	(000000-)	Stud, M10-1.50 X 35	1
	13	32492	(000000-)	Washer, Flat, .38 Hard	1
	14	39312	(000000-)	Nut, Hex, Std, M10-1.50	1

Fig. 14 - Hydraulic Schematic

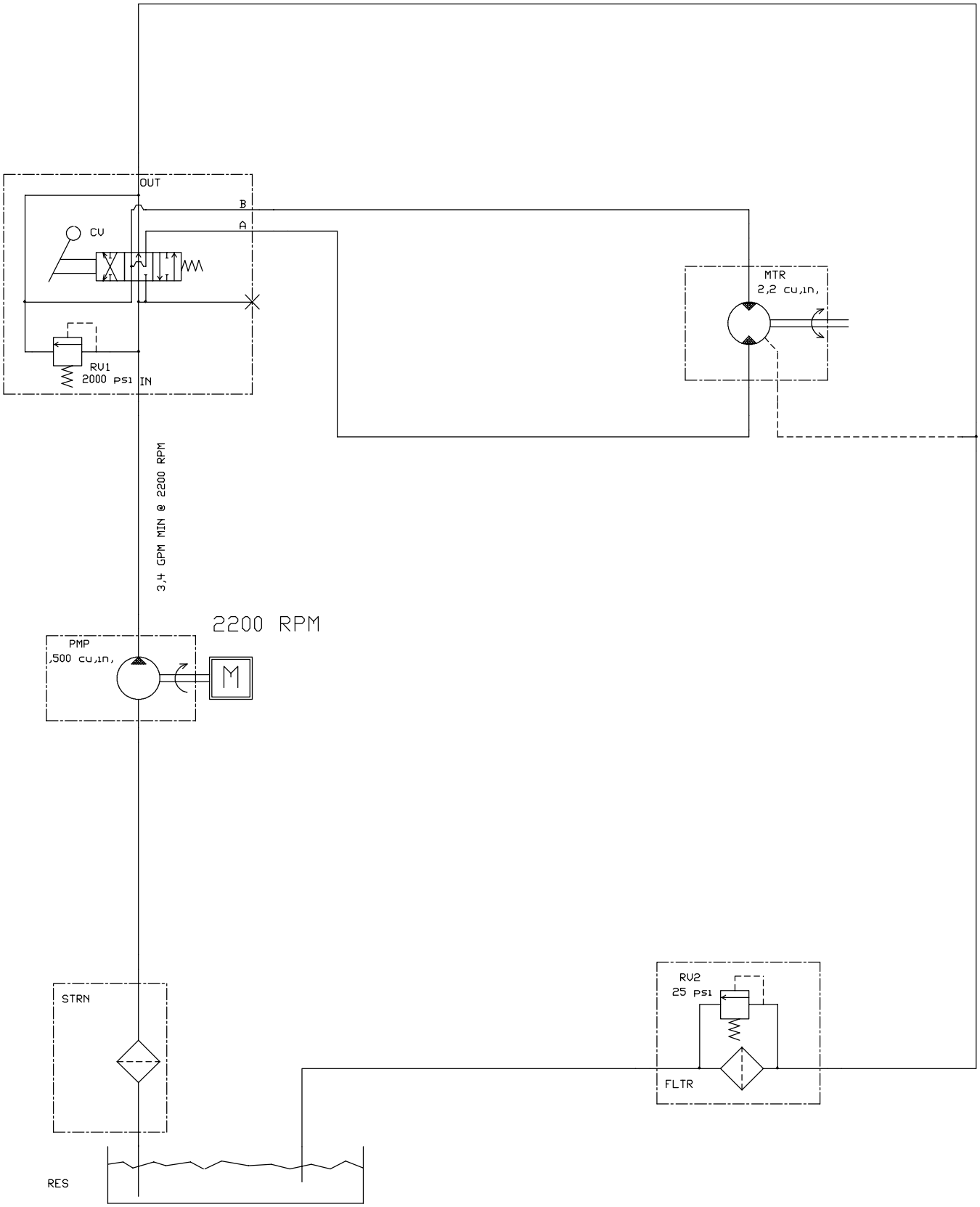

Fig. 15 - Hydraulic Hose Group

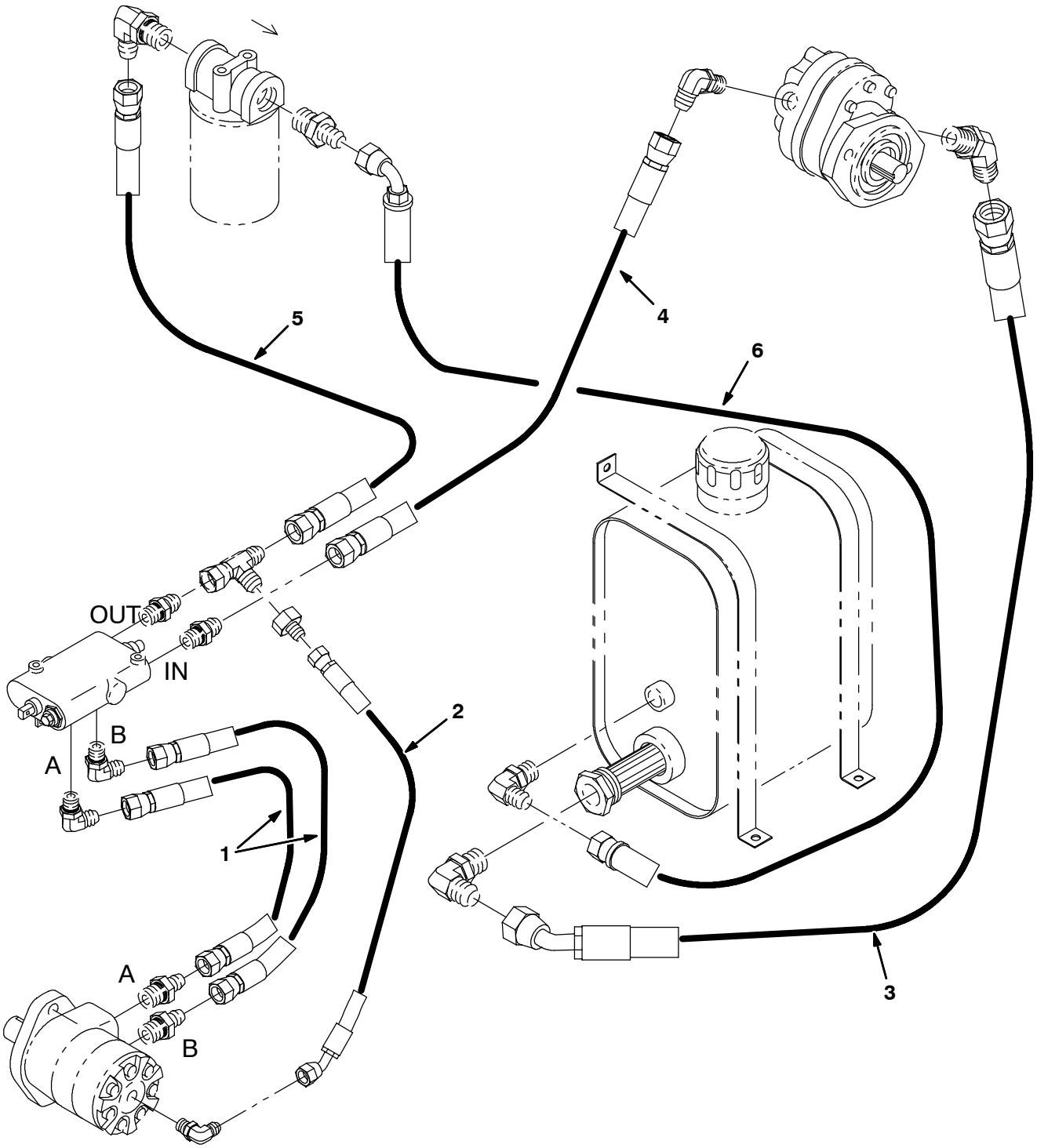

352652 - IC

Ref.	Tennant Part No.	Machine Serial Number	Description	Qty.
1	83457	(000000-)	Hose, Hyd, Med06, Jf Str/Str	2
2	83458	(000000-)	Hose, Hyd, Low04, Jf Str/E45	1
3	83459	(000000-)	Hose, Hyd, Suc12, Jf Str/E45	1
4	64772	(000000-)	Hose, Hyd	1
5	02999	(000000-)	Hose, Hyd	1
6	19630	(000000-)	Hose, Hyd	1

Fig. 16 - Hydraulic Reservoir Group

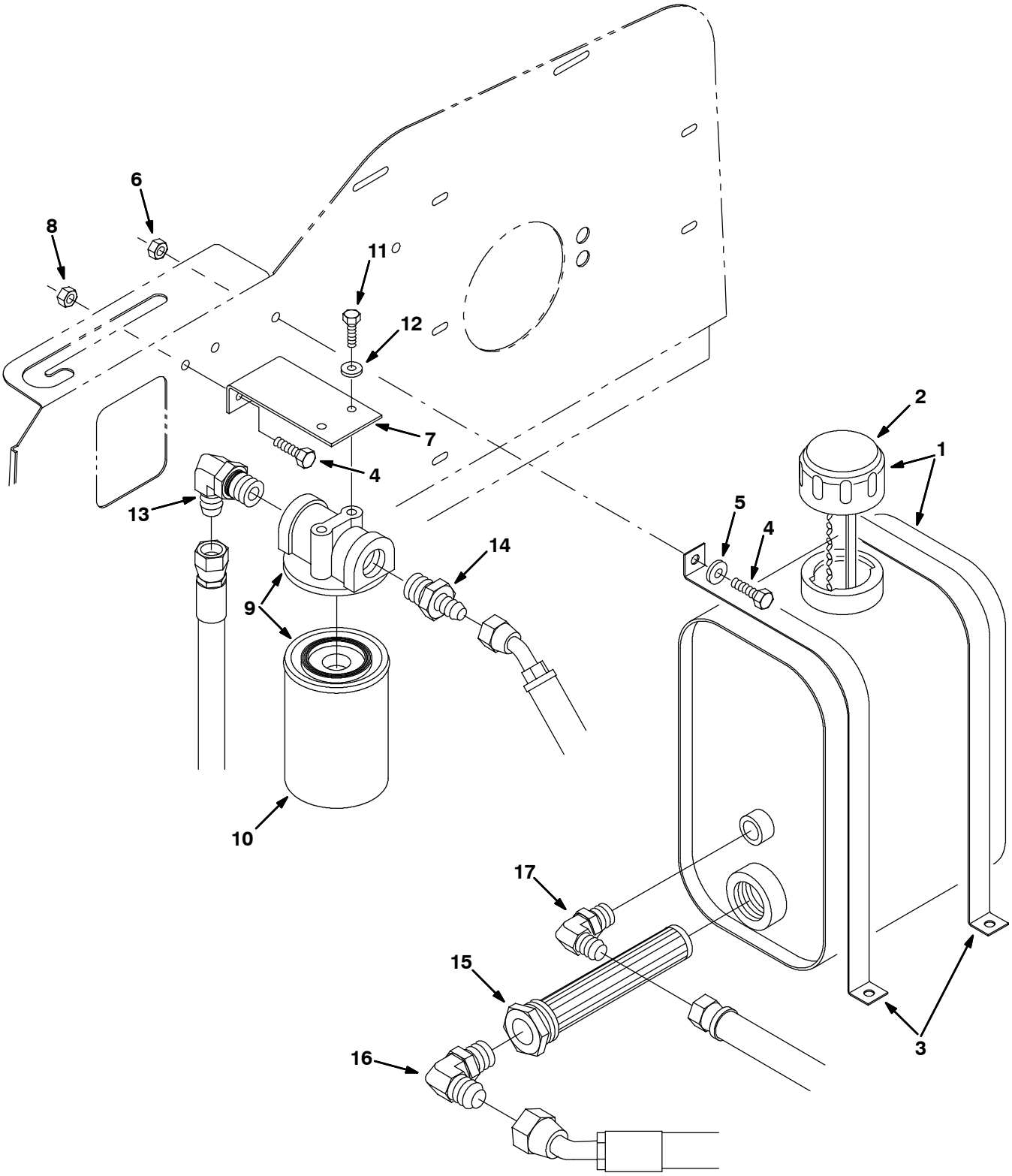

352650 - IC

Fig. 16 - Hydraulic Reservoir Group

	Ref.	Tennant Part No.	Machine Serial Number	Description	Qty.
▽	1	83454	(000000-)	Reservoir, 2.0Gal	1
▲	2	360991	(000000-)	Breather, Hyd	1
▲		70006	(000000-)	Gasket, Cap, Hyd	1
	3	83485	(000000-)	Strap, Mtg, Hyd Tank	2
	4	16931	(000000-)	Screw, Hex, M08-1.25 X 20, 8.8	6
	5	32491	(000000-)	Washer, Flat, .31 Hard	4
	6	08709	(000000-)	Nut, Hex, Lock, M08-1.25,Nl	2
	7	83486	(000000-)	Bracket, Hyd Filter	1
	8	07791	(000000-)	Nut, Hex, Flange, M08-1.25	2
▽	9	55619	(000000-)	Filter, Oil, Hyd	1
▲	10	55740	(000000-)	Filter, Oil, Hyd	1
	11	19315	(000000-)	Screw, Hex, .25-20 X 0.50, G5	2
	12	41185	(000000-)	Washer, Belleville, .25	2
	13	47655	(000000-)	Fitting, Hyd, Elbow	1
	14	42227	(000000-)	Fitting, Hyd, Str	1
	15	361023	(000000-)	Strainer, Hyd 10Gpm 100Mesh	1
	16	46481	(000000-)	Fitting, Hyd, Elbow	1
	17	56821	(000000-)	Fitting, Hyd, Elbow	1

Fig. 17 - Hydraulic Pump and Belts Group

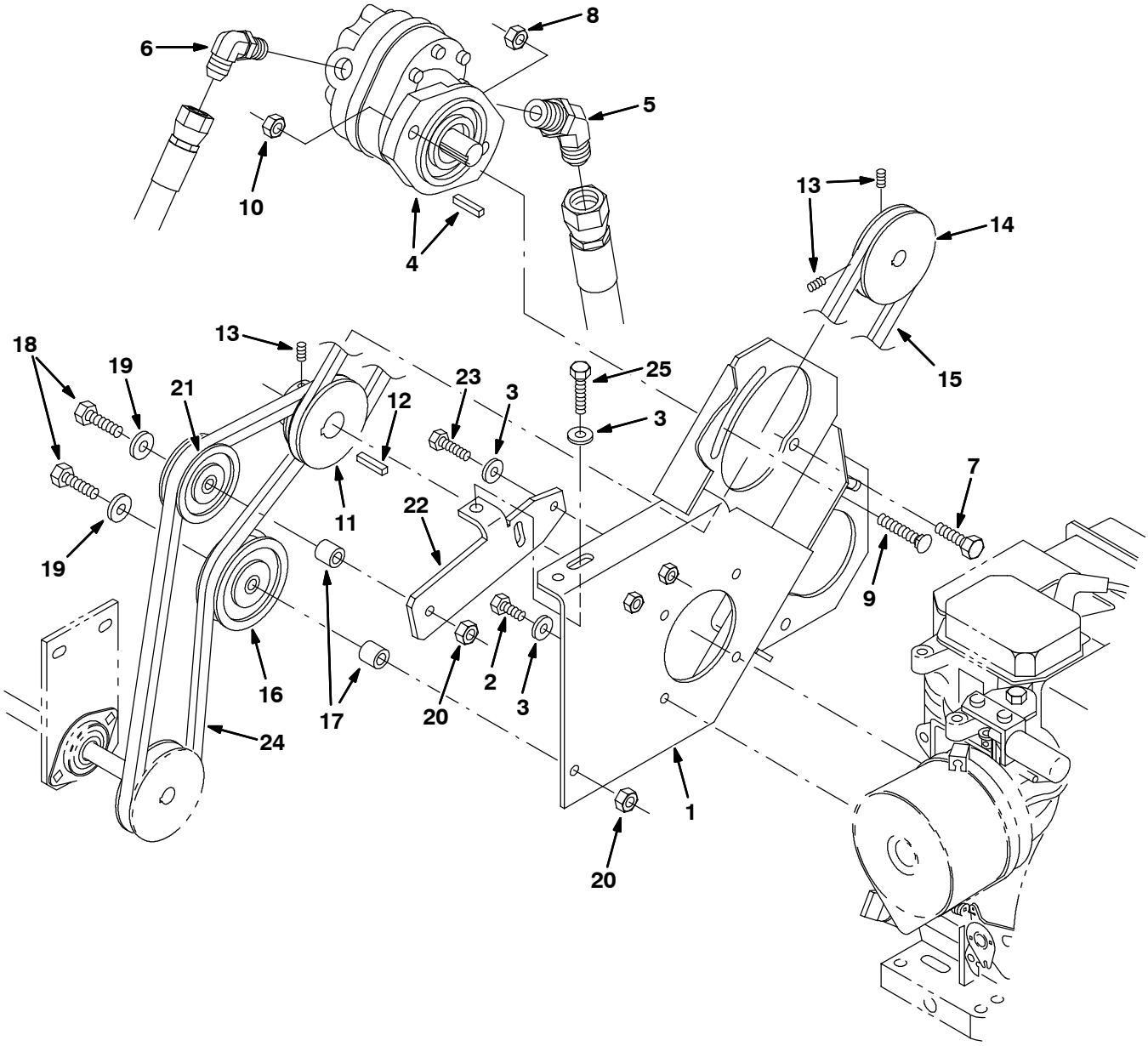

352644 - IC

Fig. 17 - Hydraulic Pump and Belts Group

Ref.	Tennant Part No.	Machine Serial Number	Description	Qty.
1	384456	(000000-)	Channel Wldt, Pump Mt	1
2	07592	(000000-)	Screw, Hex, .31-24 X 0.75, G5	4
3	39349	(000000-)	Washer, Flat, .31 Sae	7
4	83449	(000000-)	Pump, Hyd Gear (See Breakdowns)	1
5	16081	(000000-)	Fitting, Hyd, Elbow	1
6	56821	(000000-)	Fitting, Hyd, Elbow	1
7	39284	(000000-)	Screw, Hex, M10-1.5 X 35, 8.8	1
8	41430	(000000-)	Nut, Hex, Lock, M10-1.5, Nl	1
9	25154	(000000-)	Bolt, Carriage, .38-16 X 1.50	1
10	50902	(000000-)	Nut, Hex, Lock, .38-16, Nl	1
11	83523	(000000-)	Sheave, 3V,2Gr, 3.30Pd	1
12	00927	(000000-)	Key, Square	1
13	09162	(000000-)	Screw, Set, M06-1.0 X 8, Nl	4
14	83479	(000000-)	Sheave, 3V 3.30 Pd	1
15	46461	(000000-)	V-Belt, 3V0250	1
16	02356	(000000-)	Pulley	1
17	83466	(000000-)	Spacer	2
18	27992	(000000-)	Screw, Hex, .38-16 X 2.50, G5	2
19	15331	(000000-)	Washer, Flat, .62 Sae	2
20	50902	(000000-)	Nut, Hex, Lock, .38-16, Nl	2
21	02355	(000000-)	Sheave,Idler,W.Brng,Plastic	1
22	384431	(000000-)	Arm, Idler Sheave	1
23	39277	(000000-)	Screw, Hex, M08-1.25 X 25, 8.8	2
24	57039	(000000-)	V-Belt, 3V0490 Cogged	1
25	41342	(000000-)	Screw, Hex, M08-1.25 X 40, 8.8	1

Fig. 18 - Hydraulic Control Valve Group

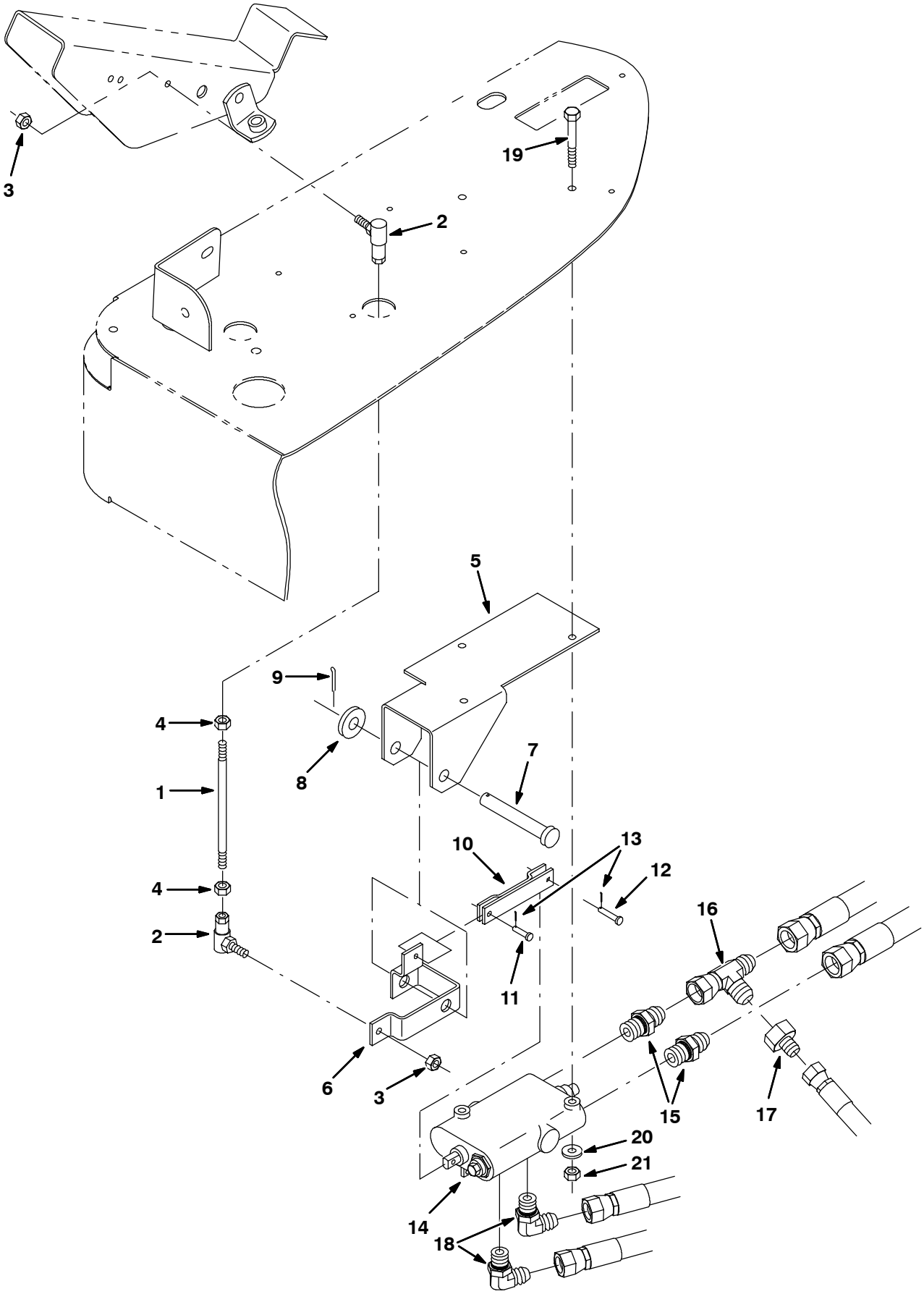

352634 - IC

Fig. 18 - Hydraulic Control Valve Group

Ref.	Tennant Part No.	Machine Serial Number	Description	Qty.
1	81991	(000000-)	Rod-Thrd, 2End .25-28	1
2	14601	(000000-)	Balljoint	2
3	13513	(000000-)	Nut, Hex, Lock, .25-28, Nl	2
4	01714	(000000-)	Nut, Hex, Std, .25-28	2
5	81986	(000000-)	Bracket, Mtg, Bellcrank	1
6	81987	(000000-)	Bellcrank	1
7	23683	(000000-)	Pin, Clevis	1
8	32486	(000000-)	Washer, Flat, .50 Sae	1
9	08182	(000000-)	Pin, Cotter	1
10	81983	(000000-)	Linkage Wldt, Valve	1
11	36376	(000000-)	Pin, Clevis	1
12	76782	(000000-)	Pin, Clevis	1
13	08170	(000000-)	Pin, Cotter	2
14	383806	(000000-)	Valve, Hyd Cntrl Man (See Breakdowns)	1
15	44869	(000000-)	Fitting, Hyd, Str	2
16	45482	(000000-)	Fitting, Hyd, Tee	1
17	57979	(000000-)	Fitting, Hyd, Str	1
18	56820	(000000-)	Fitting, Hyd, Elbow	2
19	06949	(000000-)	Screw, Hex, M06-1.0 X 50, 8.8	2
20	32490	(000000-)	Washer, Flat, .25 Hard	2
21	08708	(000000-)	Nut, Hex, Lock, M06-1.0, Nl	2

Fig. 19 - Front Wheel Pivot Group

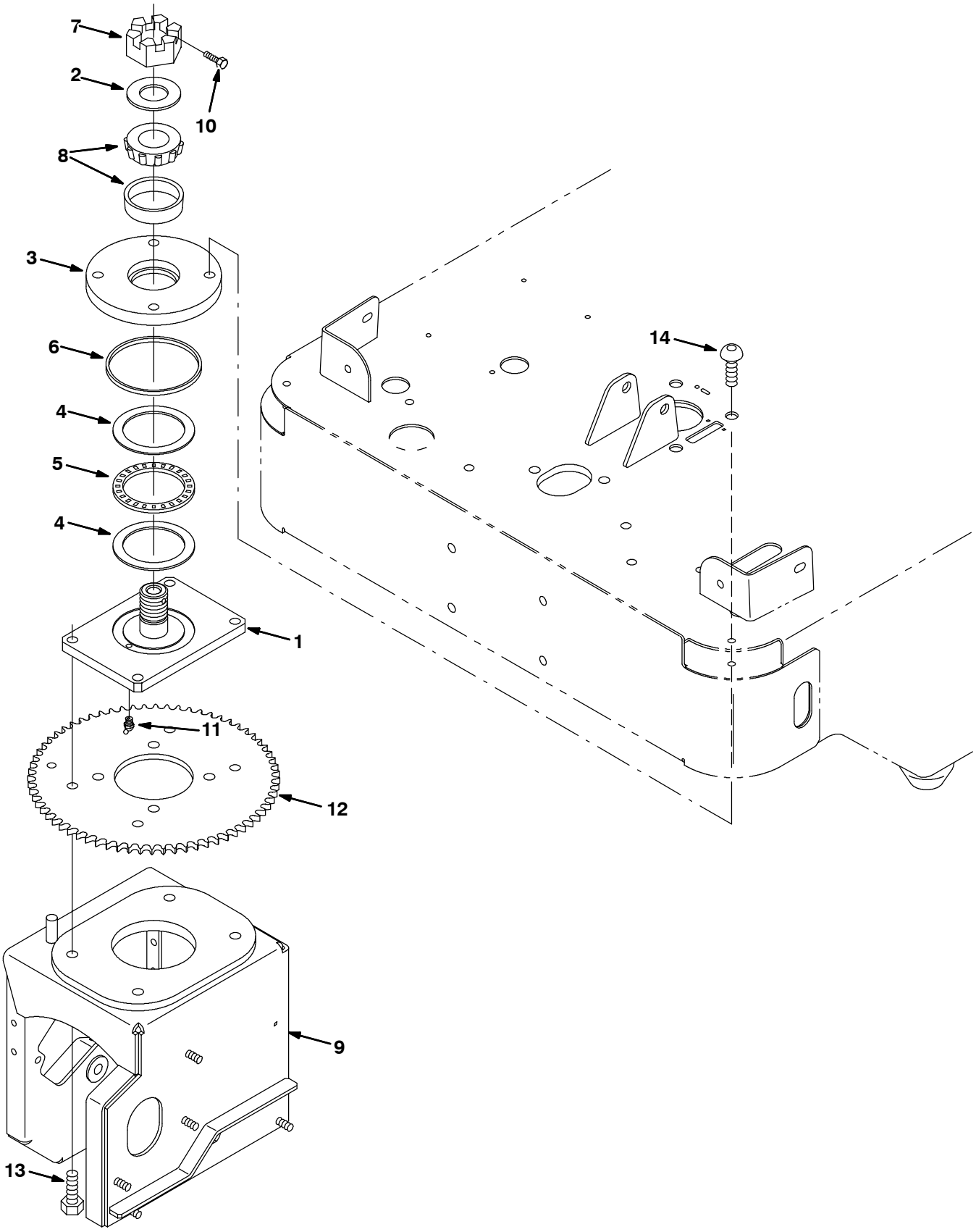

353149 - IC

Fig. 19 - Front Wheel Pivot Group

Ref.	Tennant Part No.	Machine Serial Number	Description	Qty.
1	83044	(000000-)	Plate Wldt, Swivel	1
2	223153	(000000-)	Washer	1
3	223157	(000000-)	Plate, Swivel	1
4	223161	(000000-)	Washer, Thrust	2
5	223154	(000000-)	Bearing, Needle	1
6	223160	(000000-)	Seal, Ring	1
7	223159	(000000-)	Nut, Hexslot 1.25-12	1
8	49225	(000000-)	Bearing, Cup & Cone Assy	1
9	384405	(000000-)	Housing Wldt, Wheel, Front	1
10	361339	(000000-)	Screw, Hex 6X 1.0 16 Pltd	1
11	08407	(000000-)	Fitting, Grease	1
12	385650	(000000-)	Sprocket, Steering, Drive	1
13	41346	(000000-)	Screw, Hex, M12-1.75 X 30, 8.8	4
14	83097	(000000-)	Scr-Butn M12X1.75 25 Nylonlo	4

Fig. 20 - Front Drive Wheel Group

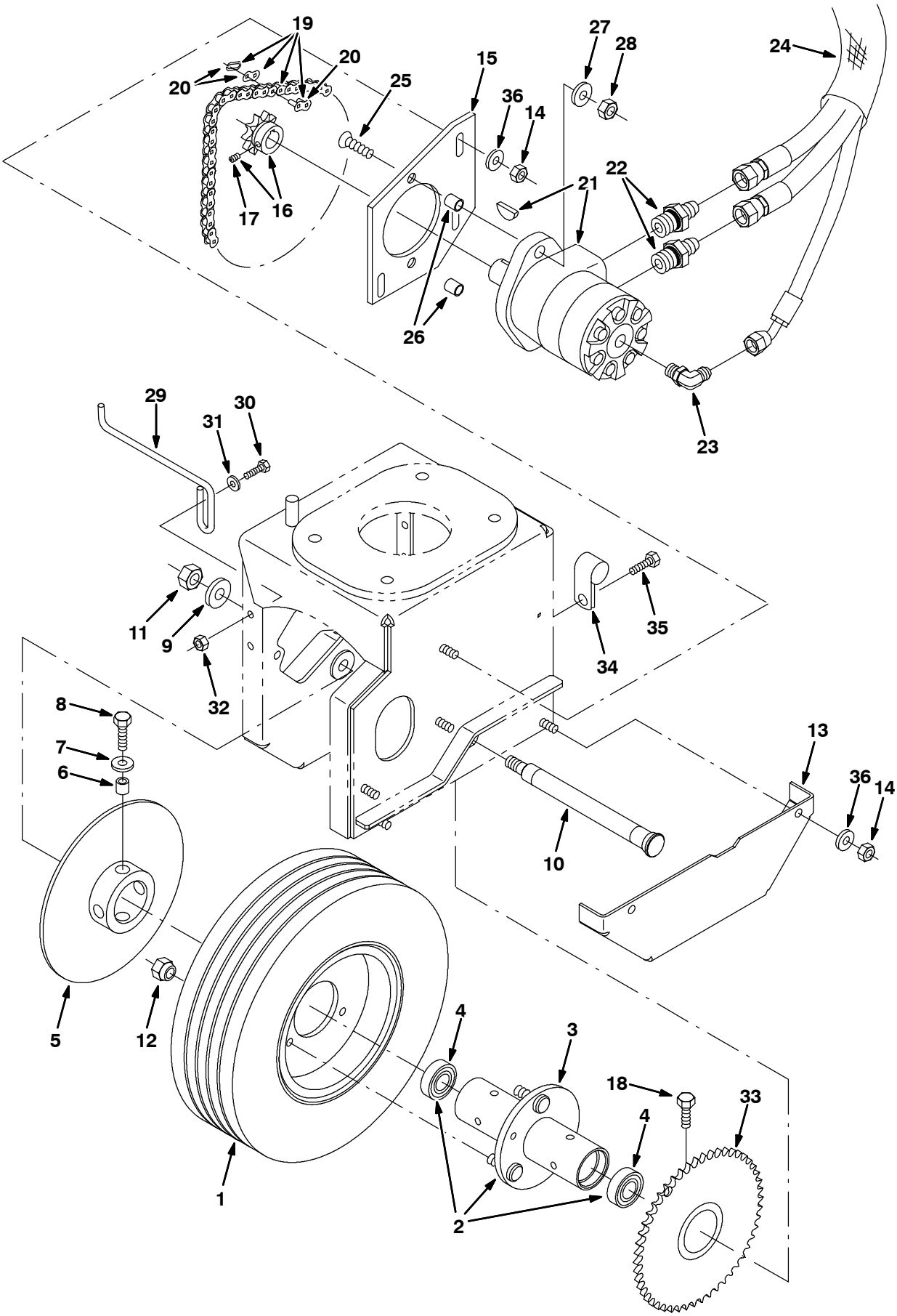

352617 - IC

Fig. 20 - Front Drive Wheel Group

	Ref.	Tennant Part No.	Machine Serial Number	Description	Qty.
	1	369345	(000000-)	Tire & Rim Assy	1
▽	2	83036	(000000-)	Bearing Assy, Front Wheel	1
▲	3	83442	(000000-)	Housing, Wheel, Front	1
▲	4	369319	(000000-)	Bearing, Ball	2
	5	83059	(000000-)	Disc Wldt, Brake 8.0 Dia X .18	1
	6	222460	(000000-)	Sleeve	4
	7	39349	(000000-)	Washer, Flat, .31 Sae	4
	8	39277	(000000-)	Screw, Hex, M08-1.25 X 25, 8.8	4
	9	32486	(000000-)	Washer, Flat, .50 Sae	1
	10	83069	(000000-)	Axle, Wheel, Front	1
	11	08711	(000000-)	Nut, Hex, Lock, M12-1.75,Nl	1
	12	11109	(000000-)	Nut, Wheel, .44-20 X 60 Angle	3
	13	384408	(000000-)	Guard, Chain	1
	14	08709	(000000-)	Nut, Hex, Lock, M08-1.25,Nl	5
	15	83443	(000000-)	Plate, Mtg	1
▽	16	83440	(000000-)	Sprocket, #40 12T 1.00 Id	1
▲	17	39327	(000000-)	Screw, Set, .25-20 X 0.31, Soc	2
	18	16931	(000000-)	Screw, Hex, M08-1.25 X 20, 8.8	4
▽	19	83444	(000000-)	Chain, O-Ring, Rlr, #40 X 51 P	1
▲	20	83099	(000000-)	Link Connection	1
	21	83448	(000000-)	Motor, Hyd Gear (See Breakdowns)	1
	22	47508	(000000-)	Fitting, Hyd, Str	2
	23	77097	(000000-)	Fitting, Hyd, Elbow	1
	24	75028	(000000-)	Sleeve	1
	25	06535	(000000-)	Screw, Flat, M10-1.5 X 35,10.9	2
	26	83521	(000000-)	Sleeve	2
	27	32485	(000000-)	Washer, Flat, .38 Sae	2
	28	41430	(000000-)	Nut, Hex, Lock, M10-1.5, Nl	2
	29	83525	(000000-)	Rod, Hose Support	2
	30	06943	(000000-)	Screw, Hex, M06-1.0 X 20, 8.8	4
	31	32483	(000000-)	Washer, Flat, .25 Sae	4
	32	07790	(000000-)	Nut, Hex, Flange, M06-1.0	4
	33	83445	(000000-)	Sprocket Wldt, Ic	1
	34	09570	(000000-)	Clamp, Strap	1
	35	74455	(000000-)	Screw, Hex Forming	1
	36	41186	(000000-)	Washer, Belleville .31 Pltd	5

Fig. 21 - Front Brake Linkage Group

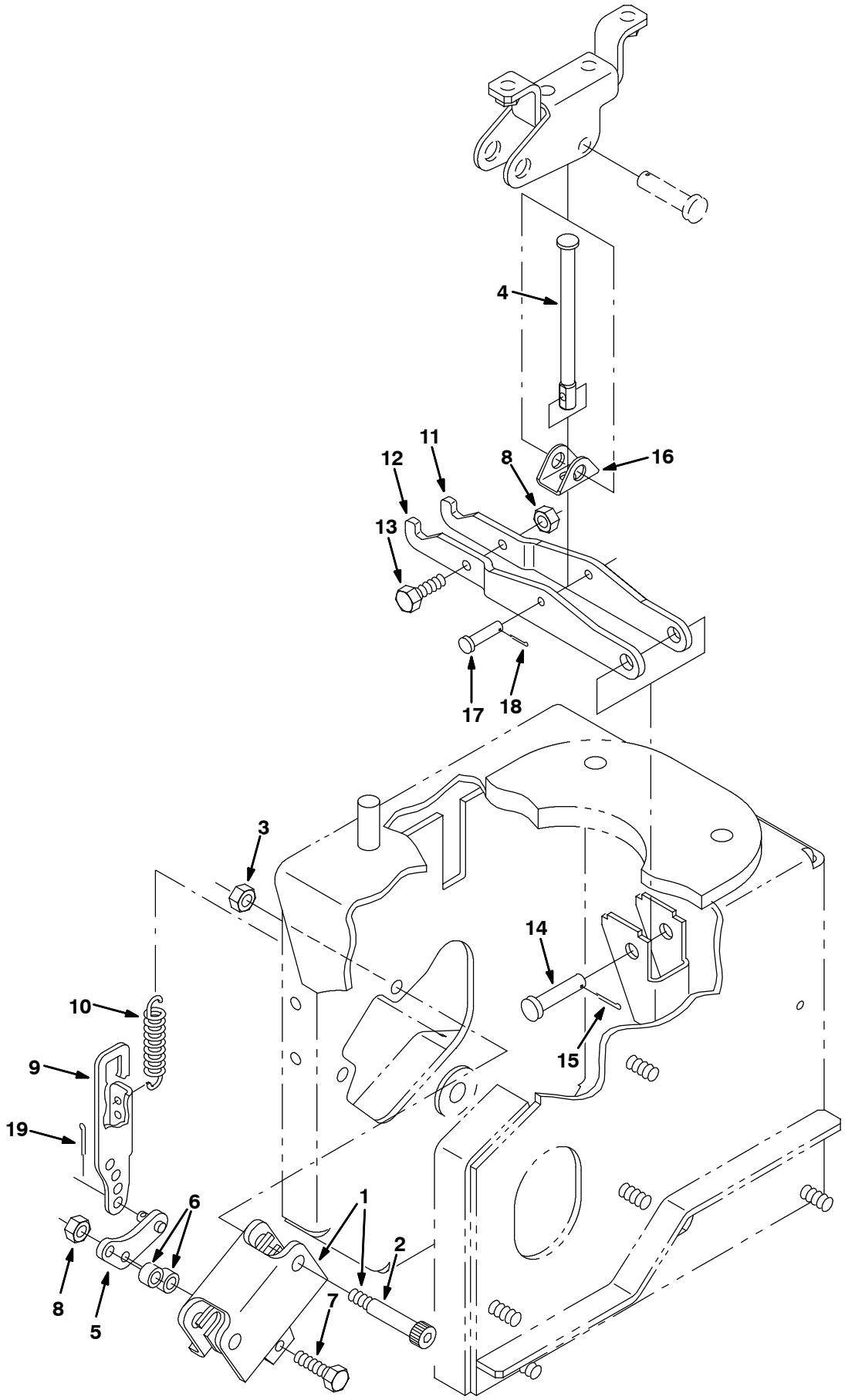

353150 – IC

Fig. 21 – Front Brake Linkage Group

	Ref.	Tennant Part No.	Machine Serial Number	Description	Qty.
▽	1	83134	(000000–)	Caliper, Brake 6.5 – 8.0 Dia	1
▲		83420	(000000–)	Brake Kit, Disc	1
▲	2	83041	(000000–)	Scr–Shld .375 X 1.50L .31–18	2
	3	01760	(000000–)	Nut, Hex, Lock, .31–18, Nl	2
	4	81685	(000000–)	Link, Brake, Upper	1
	5	83137	(000000–)	Arm Wldt, Brake Ext	1
	6	360801	(000000–)	Sleeve	2
	7	06944	(000000–)	Screw, Hex, M06–1.0 X 25, 8.8	2
	8	08708	(000000–)	Nut, Hex, Lock, M06–1.0, Nl	3
	9	83136	(000000–)	Link, Brake	1
	10	75575	(000000–)	Spring, Tension	1
	11	83138	(000000–)	Arm, Brake, Lift, Rh	1
	12	83139	(000000–)	Arm, Brake, Lift, Lh	1
	13	06943	(000000–)	Screw, Hex, M06–1.0 X 20, 8.8	1
	14	29558	(000000–)	Pin, Clevis	1
	15	39005	(000000–)	Pin, Cotter	1
	16	390868	(000000–)	Channel, Brake, Link, Upper	1
	17	36191	(000000–)	Pin, Clevis	1
	18	08170	(000000–)	Pin, Cotter	1
	19	39005	(000000–)	Pin, Cotter	1

Fig. 22 - Directional Pedal Group

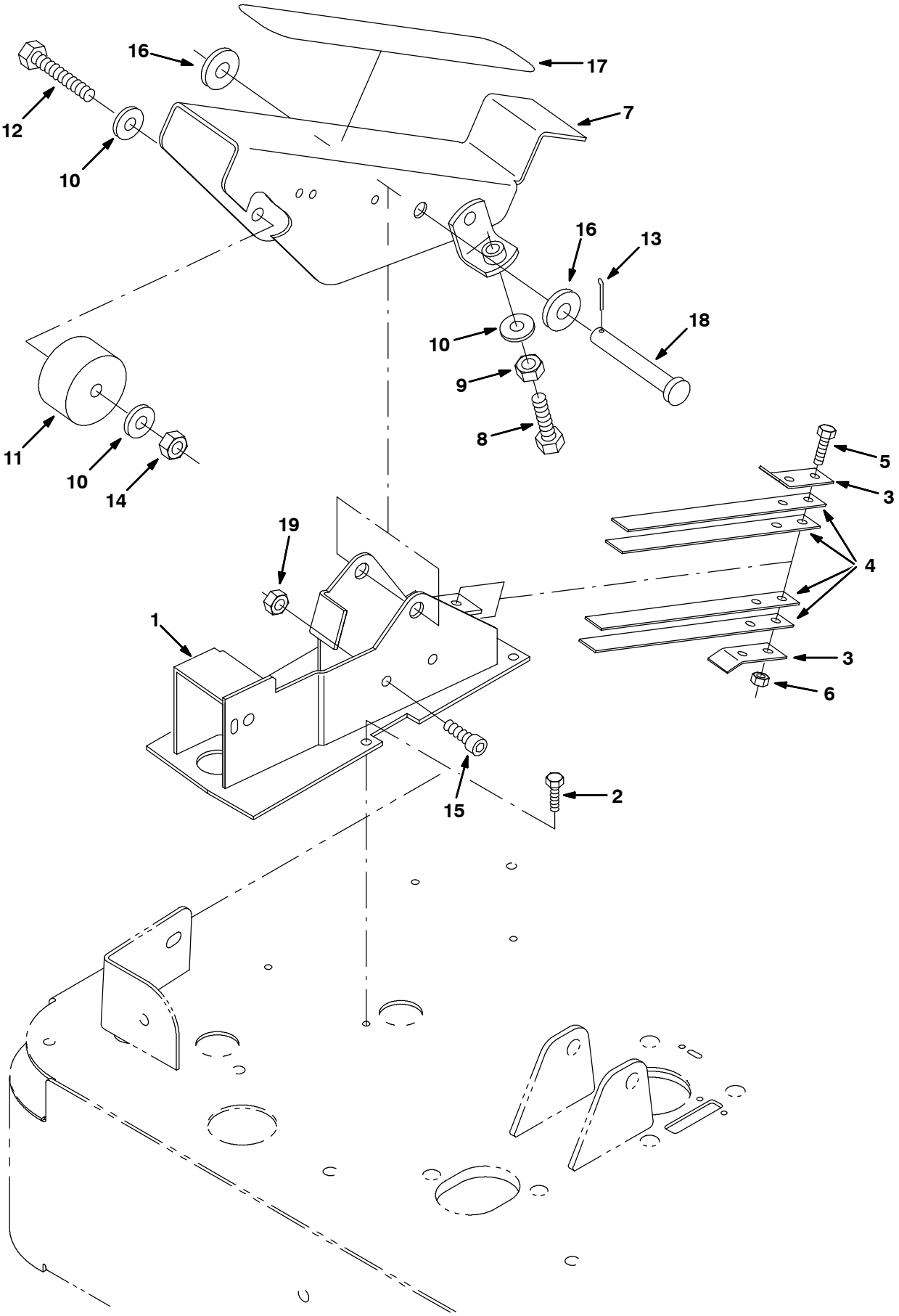

352619 - IC

Fig. 22 - Directional Pedal Group

Ref.	Tennant Part No.	Machine Serial Number	Description	Qty.
1	81569	(000000-)	Plate Wldt, Control	1
2	74455	(000000-)	Screw, Hex, Fmg, M06-1.0 X 12	4
3	223601	(000000-)	Retainer, Spring	2
4	223600	(000000-)	Strip, Control Spring	4
5	06944	(000000-)	Screw, Hex, M06-1.0 X 25, 8.8	2
6	08708	(000000-)	Nut, Hex, Lock, M06-1.0, Nl	2
7	223320	(000000-)	Pedal, Accelerator	1
8	39284	(000000-)	Screw, Hex, M10-1.5 X 35, 8.8	1
9	39312	(000000-)	Nut, Hex, Std, M10-1.5	1
10	32485	(000000-)	Washer, Flat, .38 Sae	3
11	87725	(000000-)	Spacer	1
12	06963	(000000-)	Screw, Hex, M10-1.5 X 60, 8.8	1
13	08182	(000000-)	Pin, Cotter	1
14	41430	(000000-)	Nut, Hex, Lock, M10-1.5, Nl	1
15	49609	(000000-)	Screw, Soc, M08 X 1.25 X 16, 12.9	2
16	32486	(000000-)	Washer, Flat, .50 Sae	1
17	82839	(000000-)	Pad	1
18	06474A	(000000-)	Pin, Clevis	1
19	08709	(000000-)	Nut, Hex, Lock, M08 X 1.25,Nl	2

Fig. 23 - Rear Wheel Group

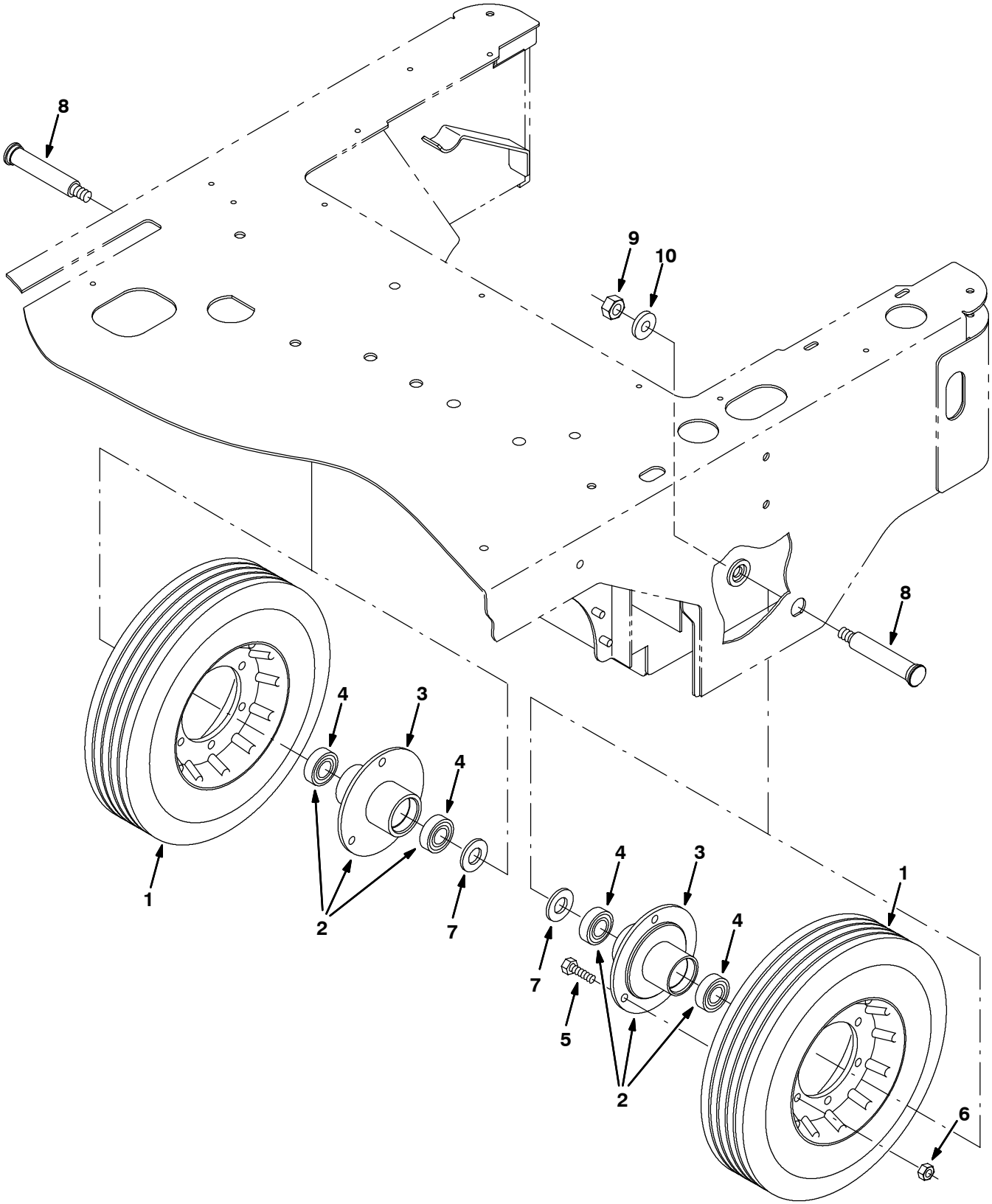

352119 - NA, CE

Fig. 23 - Rear Wheel Group

	Ref.	Tennant Part No.	Machine Serial Number	Description	Qty.
	1	81681	(000000–)	Wheel Assy, Rear, Solid	2
▽	2	83033	(000000–)	Bearing Assy, Rear Wheel	2
▲	3	384451	(000000–)	Housing Wldt, Wheel, Rear	1
▲	4	369319	(000000–)	Bearing, Ball	2
	5	39277	(000000–)	Screw, Hex, M08–1.25 X 25, 8.8	6
	6	08709	(000000–)	Nut, Hex, Lock, M08–1.25,Nl	6
	7	49145	(000000–)	Washer	2
	8	81682	(000000–)	Pin, Axle, Rear	2
	9	08711	(000000–)	Nut, Hex, Lock, M12–1.75,Nl	2
	10	32486	(000000–)	Washer, Flat, .50 Sae	2

Fig. 24 - Brake Pedal Group

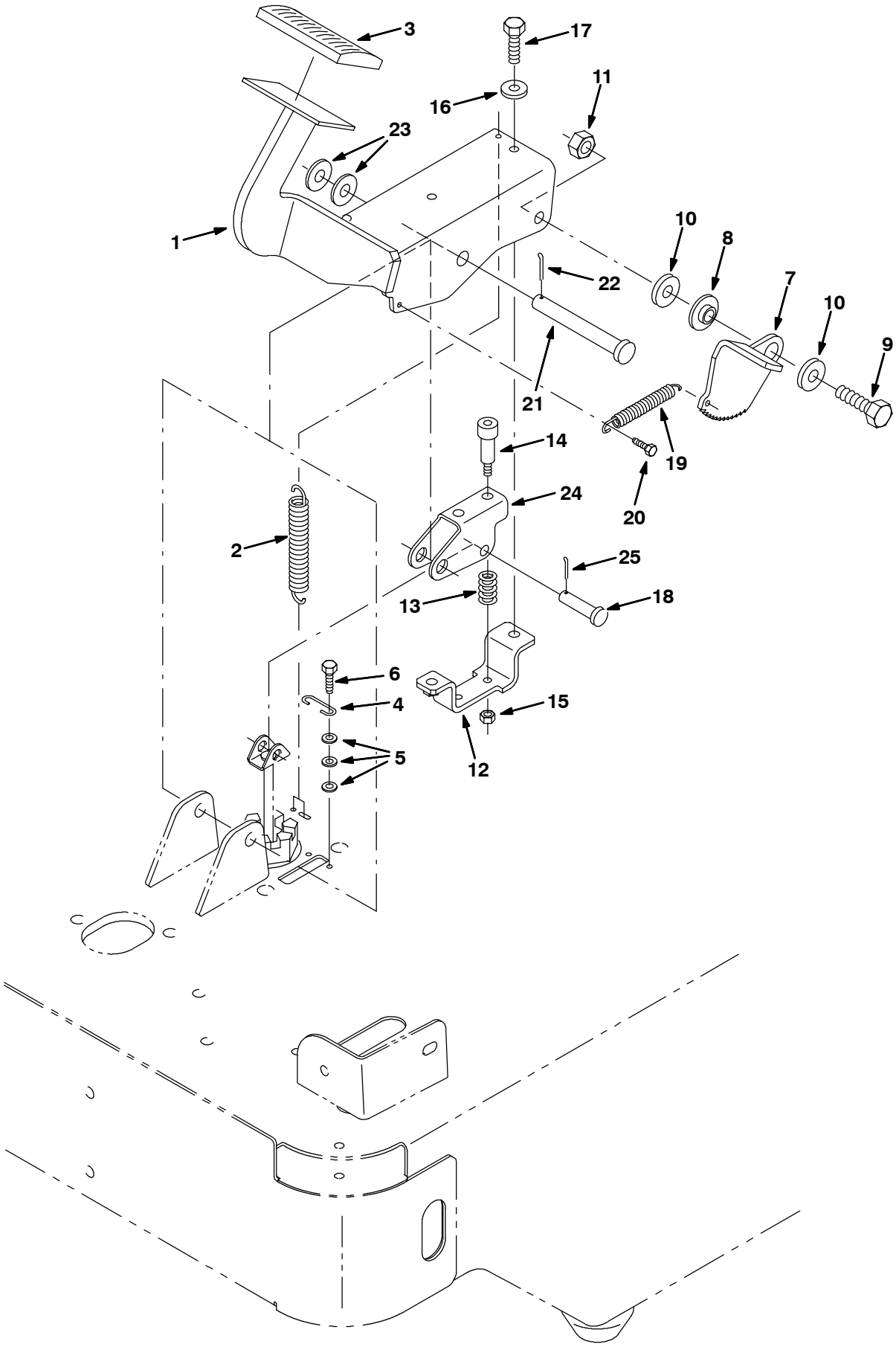

352121 - ALL

Fig. 24 - Brake Pedal Group

Ref.	Tennant Part No.	Machine Serial Number	Description	Qty.
1	83140	(000000-)	Pedal Wldt, Brake	1
2	363981	(000000-)	Spring, Ext, .50D .037W 3.00L	1
3	51109	(000000-)	Pad	1
4	97031	(000000-)	Spring, Parking Brake	1
5	19066	(000000-)	Washer, Flat, #10	6
6	223198	(000000-)	Screw, Hex	2
7	83149	(000000-)	Pedal, Brake Lock	1
8	363087	(000000-)	Spacer, Flanged	1
9	03192	(000000-)	Screw, Hex, M10-1.5 X 30, 8.8	1
10	32492	(000000-)	Washer, Flat, .38 Hard	2
11	41430	(000000-)	Nut, Hex, Lock, M10-1.5, Nl	1
12	392966	(000000-)	Channel, Mtg, Spring	1
13	81672	(000000-)	Spring, Compression	2
14	16213	(000000-)	Bolt, Shld .31D X 1.00, .25-20	2
15	75934	(000000-)	Nut, Hex, Lock, .25-20, Nl	2
16	32483	(000000-)	Washer, Flat, .25 Sae	2
17	12274	(000000-)	Screw, Hex, M06-1.0 X 20, Nl	2
18	29558	(000000-)	Pin, Clevis	1
19	54745	(000000-)	Spring, Tension	1
20	55845	(000000-)	Screw, Hex, Fmg, M05-0.8 X 16	1
21	06474A	(000000-)	Pin, Clevis	1
22	08182	(000000-)	Pin, Cotter	1
23	32486	(000000-)	Washer, Flat, .50 Sae	2
24	390867	(000000-)	Channel, Mtg, Brake	1
25	39005	(000000-)	Pin, Cotter	1

Fig. 25 - Main Brush Skirts Group

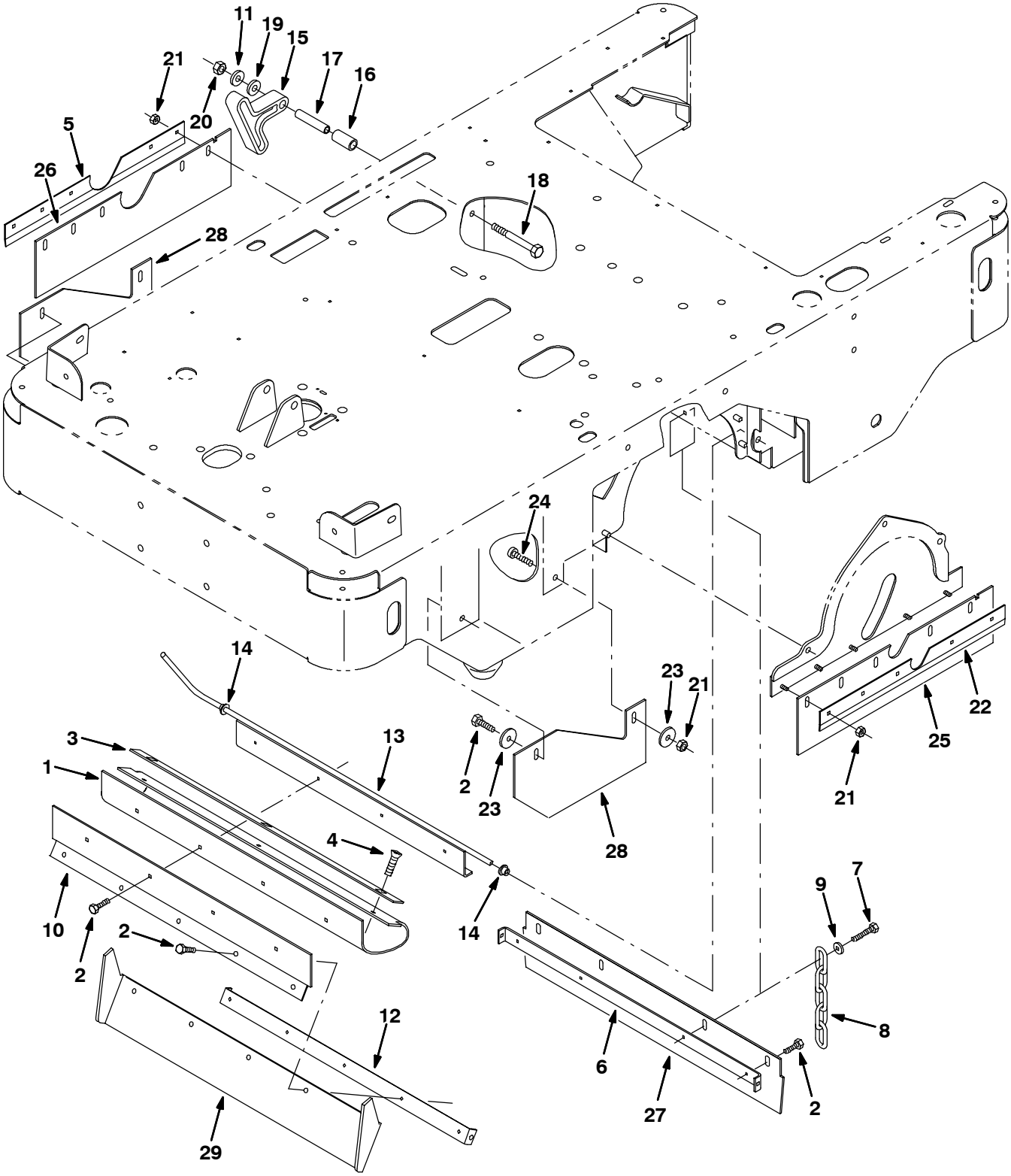

352123 - ALL

Fig. 25 - Main Brush Skirts Group

	Ref.	Tennant Part No.	Machine Serial Number	Description	Qty.
	1	81725	(000000-)	Skirt, Recirculation	1
	2	361339	(000000-)	Screw, Hex 6X 1.0 16 Pltd	14
	3	81728	(000000-)	Retainer, Flap	1
	4	360821	(000000-)	Screw, Flat, M08-1.25X 16,10.9	4
	5	81716	(000000-)	Retainer, Recirculation Flap	1
	6	81717	(000000-)	Retainer, Recirculation Flap	1
	7	222159	(000000-)	Screw, Hex, Fmg, M06-1.0 X 25	1
	8	40758	(000000-)	Chain, Link	1
	9	32490	(000000-)	Washer, Flat, .25 Hard	1
	10	81723	(000000-)	Bracket, Support, Recirc	1
	11	59633	(000000-)	Bearing, Thrust, 0.53B 1.00D 0.03W	1
	12	81722	(000000-)	Strip, Retainer	1
	13	81791	(000000-)	Support Wldt, Recirculation	1
	14	11747	(000000-)	Bearing	2
	15	81797	(000000-)	Lever, Recirc Adj	1
	16	81918	(000000-)	Spacer	1
	17	81719	(000000-)	Sleeve, .375B .50D 2.54	1
	18	06958	(000000-)	Screw, Hex, M08-1.25 X 80, 8.8	1
	19	32491	(000000-)	Washer, Flat, .31 Hard	1
	20	08709	(000000-)	Nut, Hex, Lock, M08-1.25,Nl	1
	21	08712	(000000-)	Nut, Hex, Lock, M06-1.0, Nl,Ss	12
	22	81747	(000000-)	Retainer, Recirc, Flap	1
	23	30013	(000000-)	Washer, Flat, .31 Fender	4
	24	223470	(000000-)	Screw	2
▽		83119	(000000-)	Skirt Kit,	1
▲	25	81748	(000000-)	Skirt, Side, L.H.	1
▲	26	81715	(000000-)	Skirt, Side, R.H.	1
▲	27	81727	(000000-)	Skirt, Recirculation	1
▲	28	83117	(000000-)	Skirt, Side	2
▲	29	81726	(000000-)	Skirt, Recirculation	1

Fig. 26 - Main Brush Front Flap Group

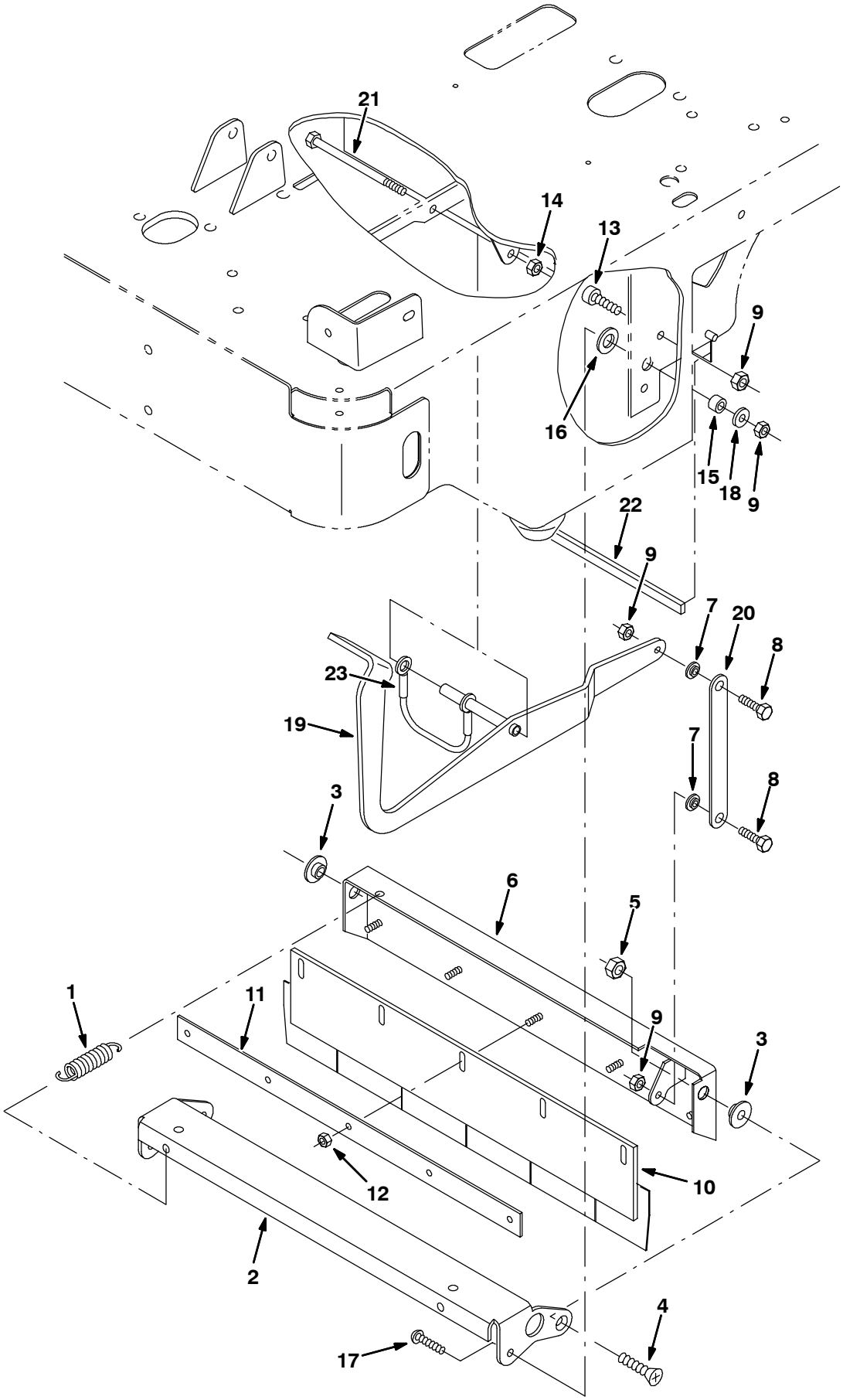

353151 - IC

Fig. 26 - Main Brush Front Flap Group

Ref.	Tennant Part No.	Machine Serial Number	Description	Qty.
1	75575	(000000-)	Spring, Tension	1
2	81794	(000000-)	Bracket, Skirt, Front	1
3	363087	(000000-)	Spacer, Flanged	2
4	06535	(000000-)	Screw, Flat, M10-1.5 X 35,10.9	2
5	41430	(000000-)	Nut, Hex, Lock, M10-1.5, Nl	2
6	81736	(000000-)	Bracket Wldt, Flap, Front	1
7	01047	(000000-)	Retainer	2
8	16931	(000000-)	Screw, Hex, M08-1.25 X 20, 8.8	2
9	08709	(000000-)	Nut, Hex, Lock, M08-1.25,Nl	6
10	81740	(000000-)	Skirt, Front	1
11	81734	(000000-)	Retainer	1
12	08712	(000000-)	Nut, Hex, Lock, M06-1.0, Nl,Ss	5
13	49609	(000000-)	Screw, Soc, M08-1.25 X 16, Al	2
14	08713	(000000-)	Nut, Hex, Lock, M08-1.25,Nl,Ss	1
15	222556	(000000-)	Sleeve	2
16	20536-1	(000000-)	Washer	2
17	223470	(000000-)	Screw	2
18	32491	(000000-)	Washer, Flat, .31 Hard	2
19	81913	(000000-)	Pedal Wldt	1
20	81759	(000000-)	Plate, Link, Flap	1
21	16946	(000000-)	Screw, Hex, M08-1.25 X150, 8.8	1
22	83425	(000000-)	Seal, Foam Rbr, .25 X .50 X 22.63	1
23	87172	(000000-)	Cable	1

Fig. 27 - Main Brush Idler Group

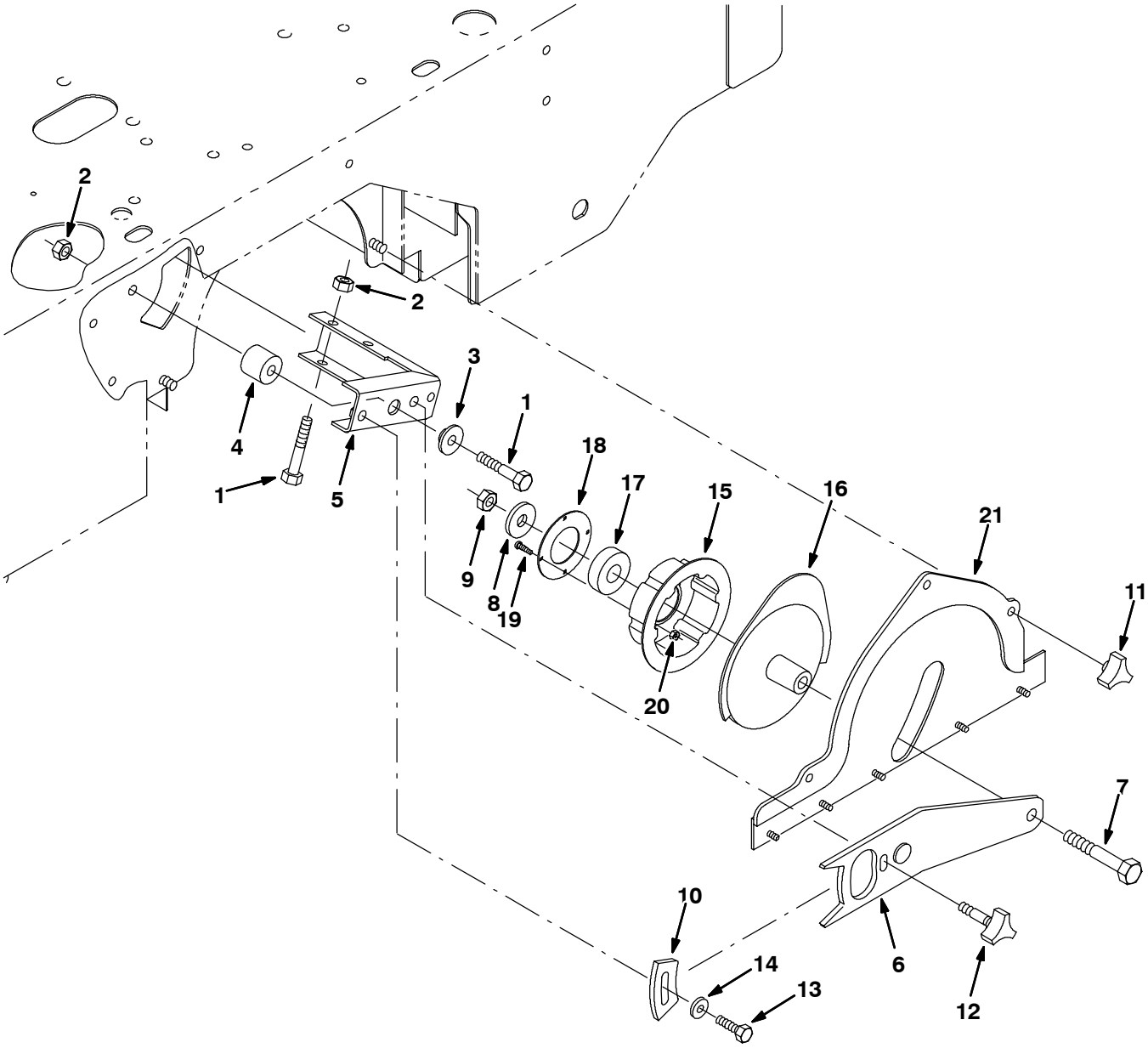

352127 - ALL

Fig. 27 - Main Brush Idler Group

Ref.	Tennant Part No.	Machine Serial Number	Description	Qty.
1	06963	(000000-)	Screw, Hex, M10-1.5 X 60, 8.8	3
2	41430	(000000-)	Nut, Hex, Lock, M10-1.5, Nl	3
3	363087	(000000-)	Spacer, Flanged	1
4	81729	(000000-)	Spacer	1
5	81731	(000000-)	Bracket, Brush Arm	1
6	81739	(000000-)	Plate, Brush Lift	1
7	12138	(000000-)	Screw, Hex, M12-1.75 X120, 8.8	1
8	36328	(000000-)	Washer, Belleville	1
9	09741	(000000-)	Nut, Hex, Lock, M12-1.75,Nl,Ss	1
10	81884	(000000-)	Plate, Arm Adj	1
11	222470	(000000-)	Knob, M8X1.25 Insert	3
12	83189	(000000-)	Knob Assy	1
13	39277	(000000-)	Screw, Hex, M08-1.25 X 25, 8.8	1
14	32491	(000000-)	Washer, Flat, .31 Hard	1
15	81818	(000000-)	Plug, Brush, Drive	1
16	81735	(000000-)	Plug Wldt	1
17	46390	(000000-)	Bearing, Ball	1
18	35836	(000000-)	Retainer	1
19	12312	(000000-)	Screw, Hex, M05-0.8 X 12, 8.8	4
20	06549	(000000-)	Nut, Hex, Lock, M05-0.8, Nl	4
21	81775	(000000-)	Brush Door Wldt	1

Fig. 28 - Main Brush Drive Group

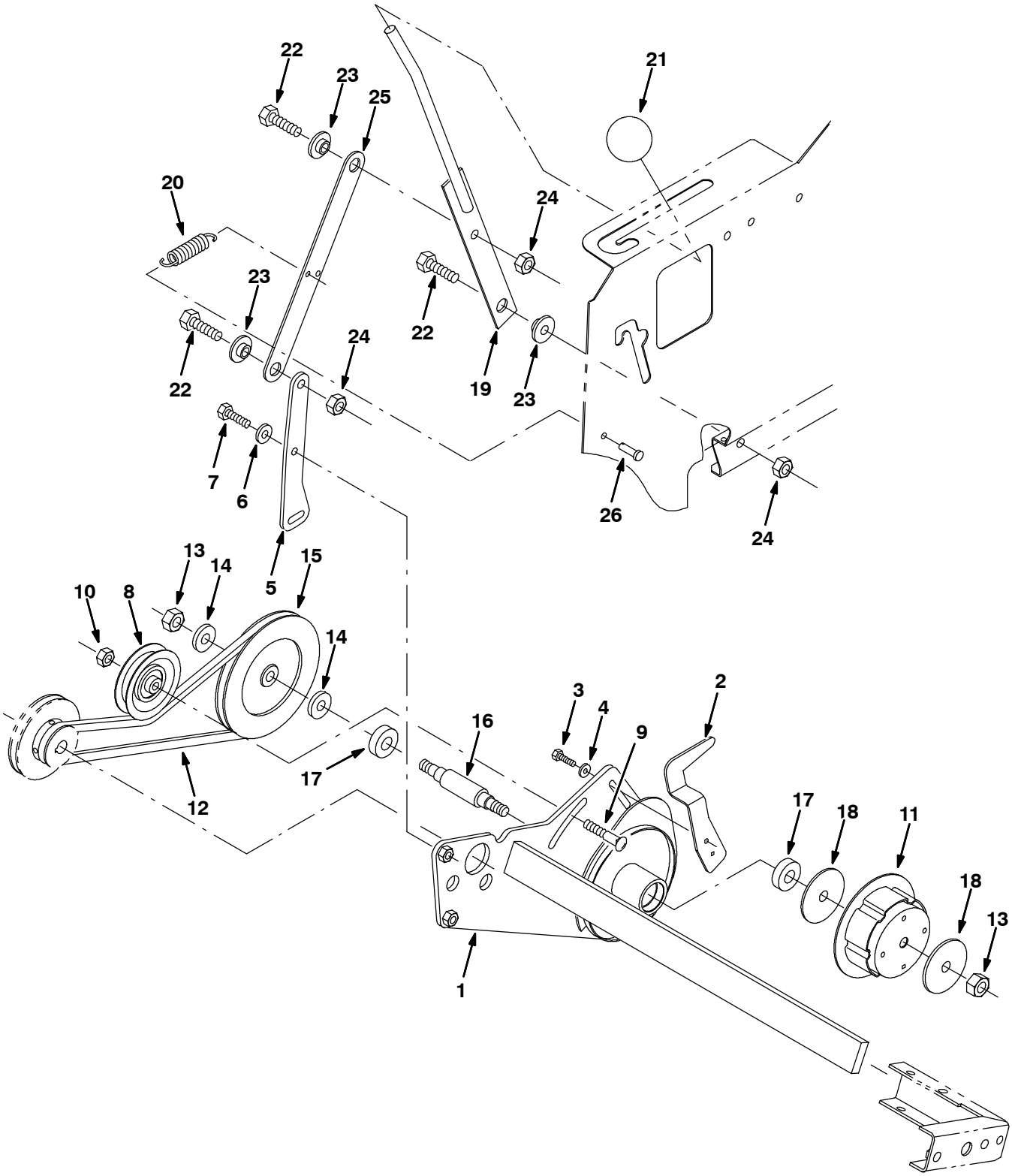

352621 - IC

Fig. 28 - Main Brush Drive Group

Ref.	Tennant Part No.	Machine Serial Number	Description	Qty.
1	81780	(000000-)	Brush Arm Wldt	1
2	81776	(000000-)	Plate, Flap, Rear Adj	1
3	06943	(000000-)	Screw, Hex, M06-1.0 X 20, 8.8	2
4	32490	(000000-)	Washer, Flat, .25 Hard	4
5	81894	(000000-)	Link, Brush Arm	1
6	32491	(000000-)	Washer, Flat, .31 Hard	2
7	16931	(000000-)	Screw, Hex, M08-1.25 X 20, 8.8	2
8	81710	(000000-)	Sheave	1
9	10820	(000000-)	Bolt, Carriage, .38-16 X 1.25	1
10	36643	(000000-)	Nut, Hex, Lock, .38-16, Nl	1
11	81819	(000000-)	Plug, Brush Drive, Splined	1
12	81899	(000000-)	Belt, 3V	1
13	35846	(000000-)	Nut, Hex, Std, .50-13, Lh	2
14	32486	(000000-)	Washer, Flat, .50 Sae	2
15	81713	(000000-)	Pulley	1
16	81711	(000000-)	Shaft, Brush Drive .88Dx5.2L .	1
17	28010	(000000-)	Bearing, Ball	2
18	02384	(000000-)	Washer	2
19	81769	(000000-)	Handle Wldt	1
20	25737	(000000-)	Spring, Tension	1
21	81796	(000000-)	Knob, Round, Press On .50	1
22	39283	(000000-)	Screw, Hex, M10-1.5 X 25, 8.8	3
23	363087	(000000-)	Spacer, Flanged	3
24	41430	(000000-)	Nut, Hex, Lock, M10-1.5, Nl	2
25	81733	(000000-)	Strip, Link, Brush Lift	1
26	46800	(000000-)	Pin, Clevis	1

Fig. 29 - Main Brush Drive Shaft Group

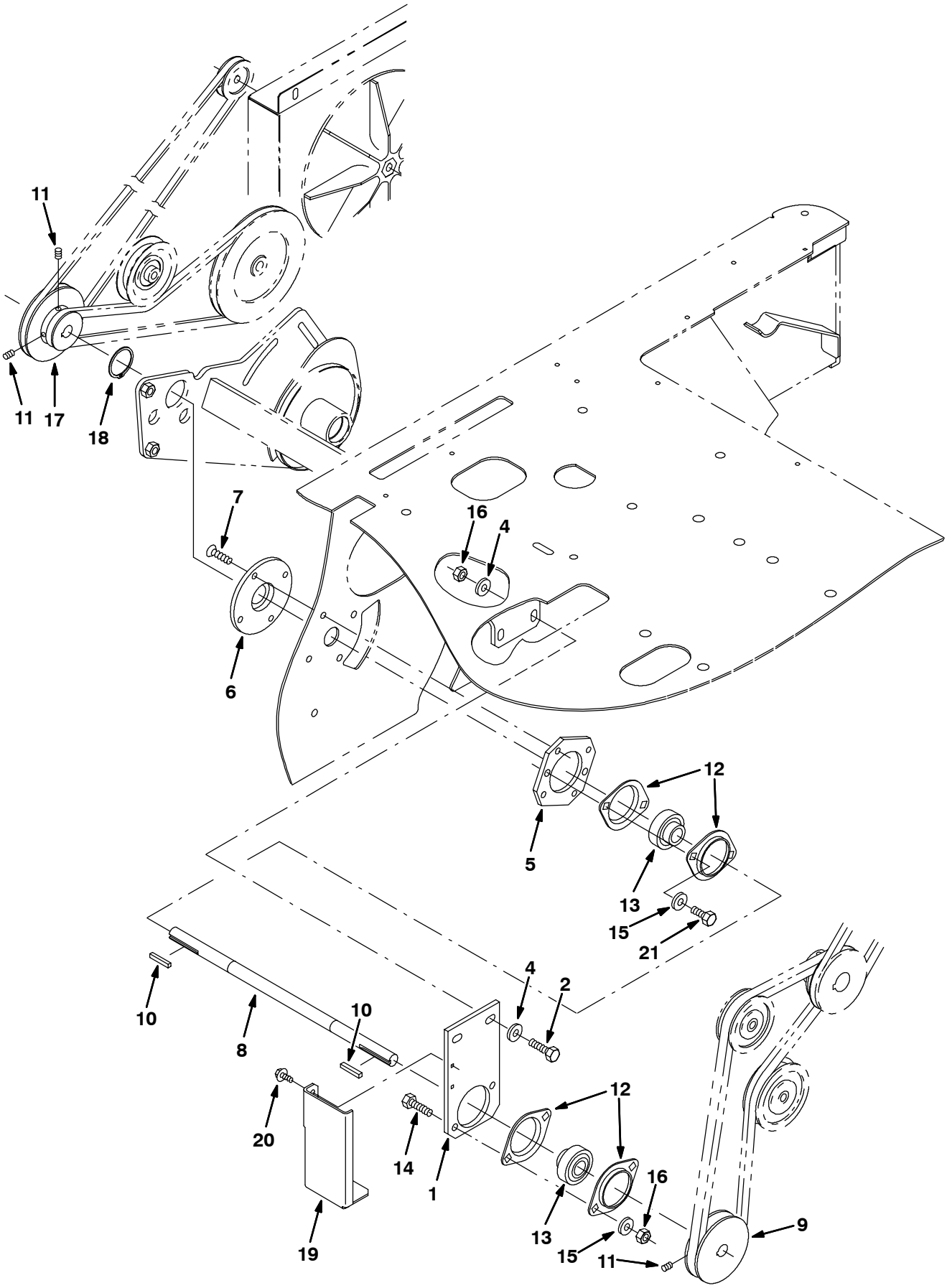

352642 - IC

Fig. 29 - Main Brush Drive Shaft Group

Ref.	Tennant Part No.	Machine Serial Number	Description	Qty.
1	83469	(000000-)	Plate, Jackshaft Mt.	1
2	76570	(000000-)	Screw, Hex, M08-1.25 X 30, 8.8	2
3	08708	(000000-)	Nut, Hex, Lock, M06-1.0, Nl	2
4	32491	(000000-)	Washer, Flat, .31 Hard	4
5	83470	(000000-)	Plate, Jackshaft Mt	1
6	81705	(000000-)	Pivot, Motor	1
7	07810	(000000-)	Screw, Flat, M08-1.25X 25,10.9	4
8	83468	(000000-)	Shaft	1
9	83474	(000000-)	Sheave, 3V 3.30 Pd.	1
10	00918	(000000-)	Key, Square	2
11	09162	(000000-)	Screw, Set, M06-1.0 X 8, Nl	4
12	35973	(000000-)	Flange, Bearing	4
13	25887	(000000-)	Bearing	2
14	16931	(000000-)	Screw, Hex, M08-1.25 X 20, 8.8	2
15	39349	(000000-)	Washer, Flat, .31 Sae	4
16	08709	(000000-)	Nut, Hex, Lock, M08-1.25,Nl	4
17	81832	(000000-)	Sheave, Combination, 3L	1
18	81798	(000000-)	Ring, Retaining, 32Mm	1
19	384422	(000000-)	Bracket, Guard, Hose	1
20	361339	(000000-)	Screw, Hex 6 X 1.0 16 Pltd	2
21	50388	(000000-)	Screw, Hex, M08-1.25 X 12, 8.8	2

Fig. 30 - Side Brush Lift Group

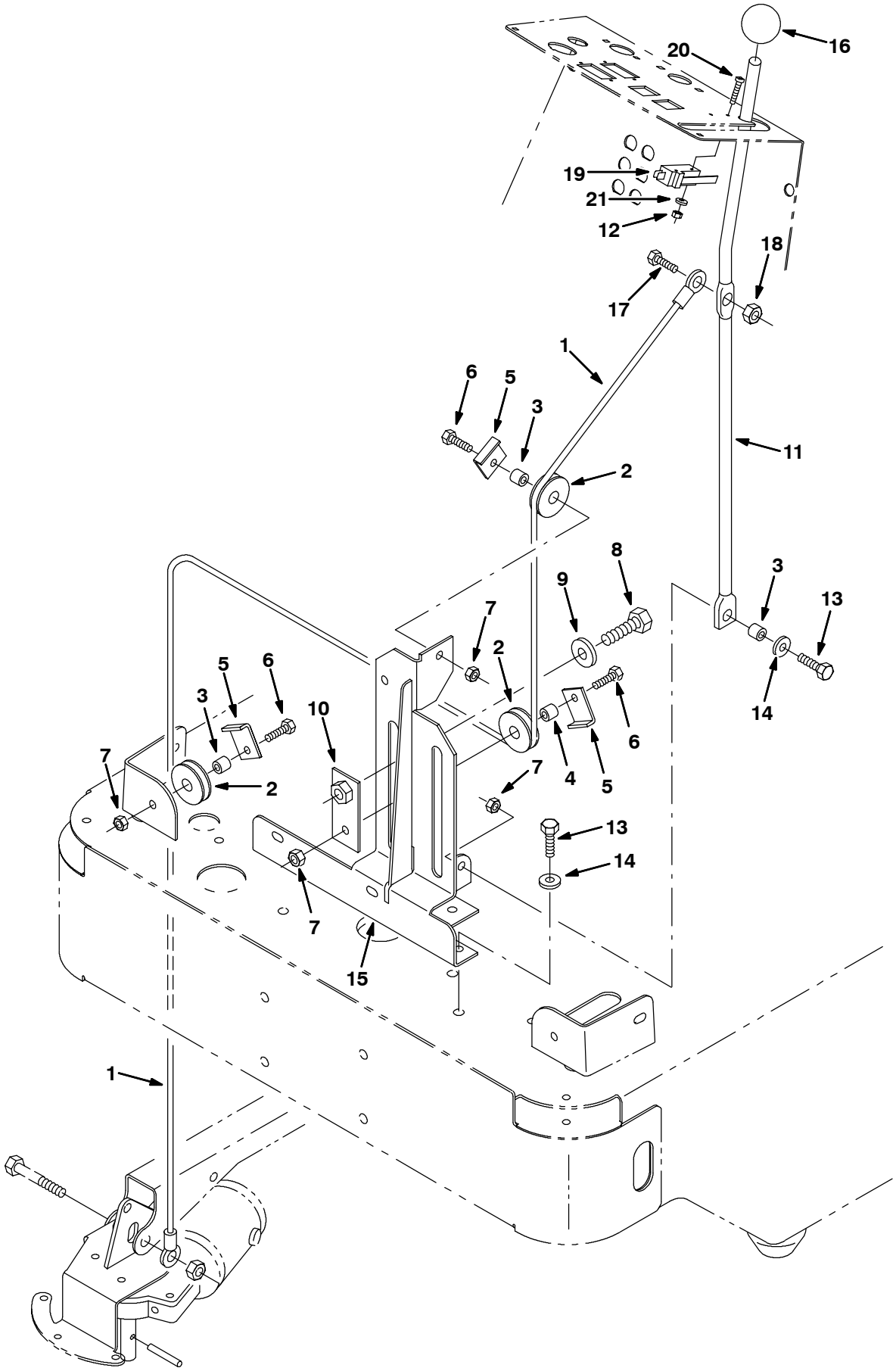

352131 - ALL

Fig. 30 - Side Brush Lift Group

Ref.	Tennant Part No.	Machine Serial Number	Description	Qty.
1	81795	(000000-)	Cable, Sidebrush Lift Rh	1
2	369781	(000000-)	Pulley, Cable, 1.5d, Nyl	3
3	222460	(000000-)	Sleeve	3
4	80395	(000000-)	Sleeve	1
5	54400	(000000-)	Angle	3
6	76570	(000000-)	Screw, Hex, M08-1.25 X 30, 8.8	3
7	08709	(000000-)	Nut, Hex, Lock, M08-1.25,Nl	4
8	06967	(000000-)	Scr Hex M12X1.75 20	1
9	32493	(000000-)	Washer, Flat, .50 Hard	1
10	81955	(000000-)	Plate, Sidebrush Lift	1
11	81956	(000000-)	Handle	1
12	01754	(000000-)	Nut, Hex, Std, M03-0.5	2
13	39277	(000000-)	Screw, Hex, M08-1.25 X 25, 8.8	4
14	32491	(000000-)	Washer, Flat, .31 Hard	4
15	81959	(000000-)	Support Wldt, Side Brush	1
16	81796	(000000-)	Knob, Round, Press On .50	1
17	06944	(000000-)	Screw, Hex, M06-1.0 X 25, 8.8	1
18	08708	(000000-)	Nut, Hex, Lock, M06-1.0, Nl	1
19	398525	(000000-)	Switch, Micro, Spdt	1
20	06923	(000000-)	Screw, Pan, M03-0.5 X 25, 4.8	2
21	39658	(000000-)	Washer, Lock, Int, #04	2

Fig. 31 - Side Brush Motor Group

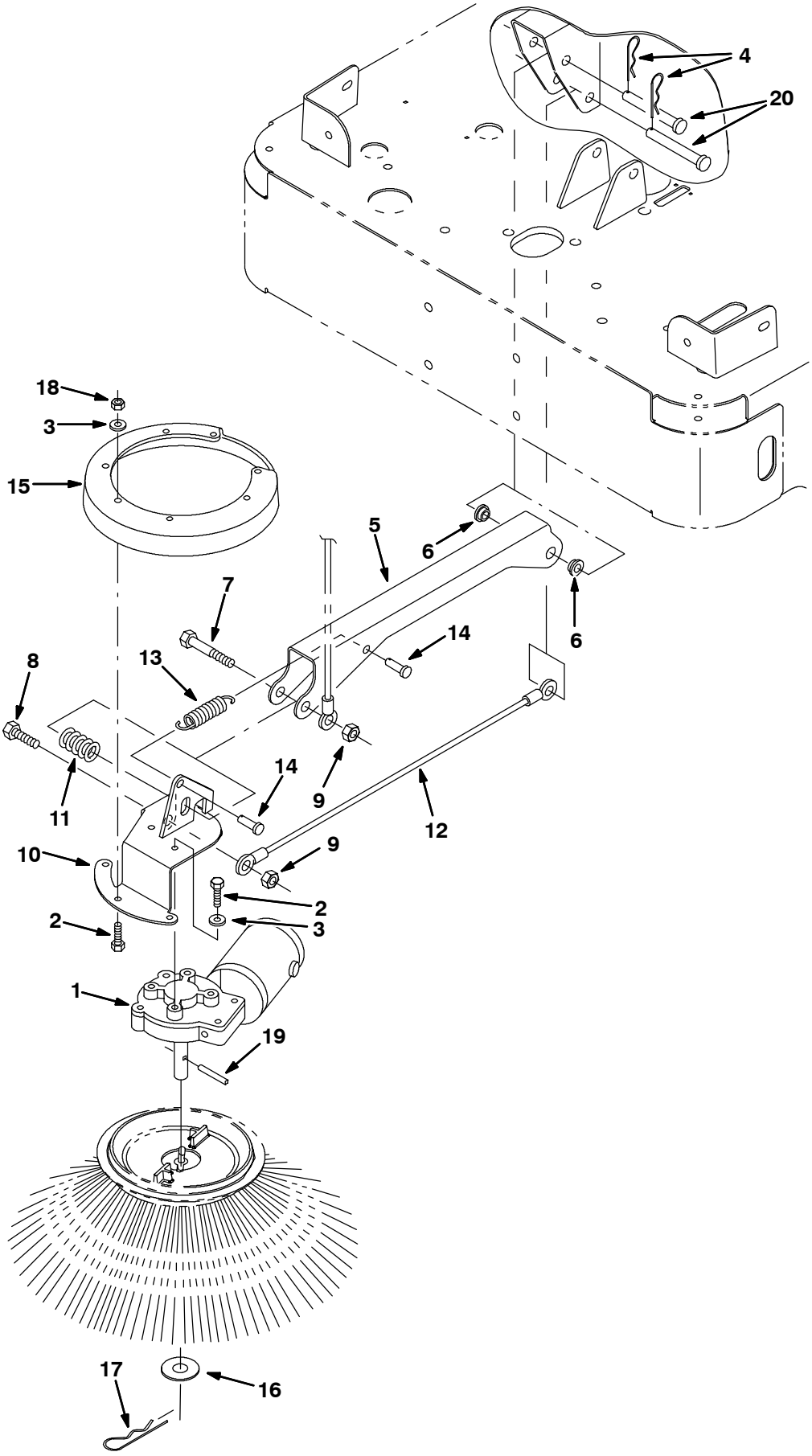

352133 - IC

Fig. 31 - Side Brush Motor Group

	Ref.	Tennant Part No.	Machine Serial Number	Description	Qty.
▽	1	379213	(000000-)	Motor, Electric, 12V	1
▲		81919	(000000-)	Brush&Spring Assy Se	1
▲		80127	(000000-)	Cap, Brush	2
▲		369795	(000000-)	Brushholder	2
▲		369796	(000000-)	Clip	2
	2	15678	(000000-)	Screw, Hex, M06-1.0 X 16, Ss	9
	3	01684	(000000-)	Washer, Flat, .25 Ss	9
	4	44906	(000000-)	Pin, Hair Cotter	2
	5	81783	(000000-)	Channel, Mtg, Sidebrush	1
	6	15648	(000000-)	Bearing, Flange	2
	7	06972	(000000-)	Screw, Hex, M12-1.75 X 60, 8.8	1
	8	41345	(000000-)	Screw, Hex, M12-1.75 X 25, 8.8	1
	9	08711	(000000-)	Nut, Hex, Lock, M12-1.75,Nl	2
	10	81786	(000000-)	Bracket Wldt, Sidebrush	1
	11	87242	(000000-)	Spring, Die .50 Id 1.00 Od 1.25	1
	12	81784	(000000-)	Cable, Sidebrush	1
	13	15047	(000000-)	Spring, Extension	1
	14	39019	(000000-)	Pin, Clevis	2
	15	81822	(000000-)	Guard,Sidebrush	1
	16	04400	(000000-)	Washer, Flat, M16, 17 X30X3Ss	1
	17	02942	(000000-)	Pin, Hair Cotter	1
	18	08712	(000000-)	Nut, Hex, Lock, M06-1.0, Nl,Ss	5
	19	11516	(000000-)	Pin	1
	20	06279	(000000-)	Pin, Clevis	2

Fig. 32 - Vacuum Fan Group

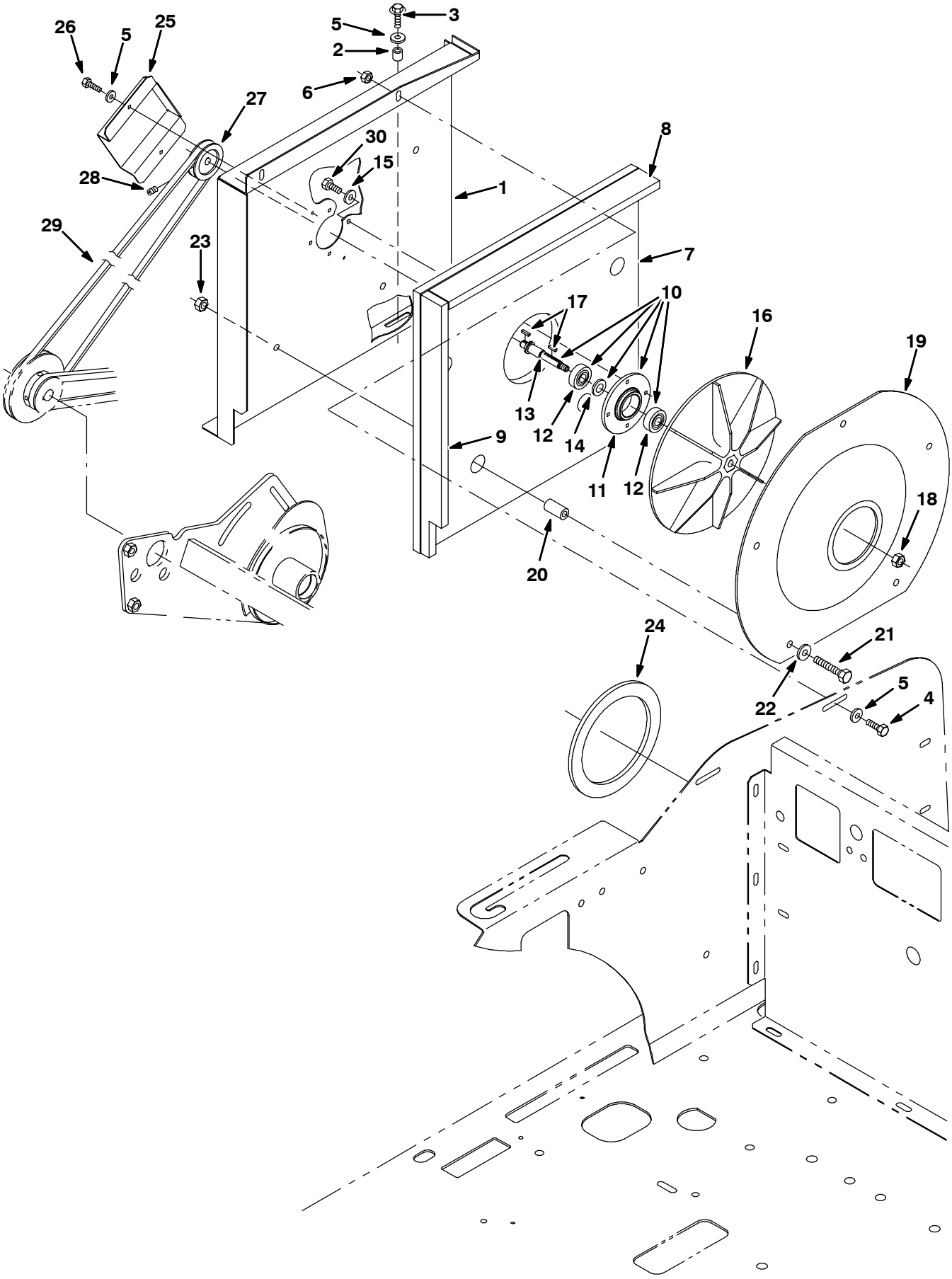

352624 - IC

Fig. 32 - Vacuum Fan Group

	Ref.	Tennant Part No.	Machine Serial Number	Description	Qty.
	1	81848	(000000-)	Plate, Housing, Bearing	1
	2	222460	(000000-)	Sleeve	2
	3	222159	(000000-)	Screw, Hex, Fmg, M06-1.0 X 25	2
	4	06942	(000000-)	Screw, Hex, M06-1.0 X 16, 8.8	2
	5	32490	(000000-)	Washer, Flat, .25 Hard	4
	6	08708	(000000-)	Nut, Hex, Lock, M06-1.0, Nl	2
	7	81843	(000000-)	Insulation, Acoustic	1
	8	81844	(000000-)	Insulation, Acoustic	1
	9	81845	(000000-)	Insulation, Acoustic	1
▽	10	83038	(000000-)	Bearing Assy, Vac Fan	1
▲	11	81838	(000000-)	Housing, Bearing	1
▲	12	81830	(000000-)	Bearing, Ball	2
▲	13	81828	(000000-)	Shaft, Fan	1
▲	14	41722	(000000-)	Washer, .516B .90D .07Cr	1
	15	41185	(000000-)	Washer, Belleville, .25	4
	16	81890	(000000-)	Impeller, 9.06 D X 0.375 B	1
	17	00960	(000000-)	Key, Square	2
	18	87299	(000000-)	Nut, Hex, Flexlock, .31-24	1
	19	81842	(000000-)	Plate, Inlet, Fan (Painted)	1
	20	363301	(000000-)	Tube	5
	21	39278	(000000-)	Screw, Hex, M08-1.25 X 50, 8.8	5
	22	32491	(000000-)	Washer, Flat, .31 Hard	5
	23	08709	(000000-)	Nut, Hex, Lock, M08-1.25,Nl	5
	24	81891	(000000-)	Seal, Vac Fan	1
	25	81917	(000000-)	Guard, Fan Sheave	1
	26	87308	(000000-)	Screw, Hex	2
	27	83541	(000000-)	Sheave, 3L,1G,1.621Pd,0.375Id	1
	28	39391	(000000-)	Screw, Set, M06-1.0 X 6, Soc	2
	29	81840	(000000-)	Belt, V, 3L610	1
	30	11635	(000000-)	Screw, Hex, M06-1.0 X 12, Ss	4

Fig. 33 - Vacuum Fan Box Group

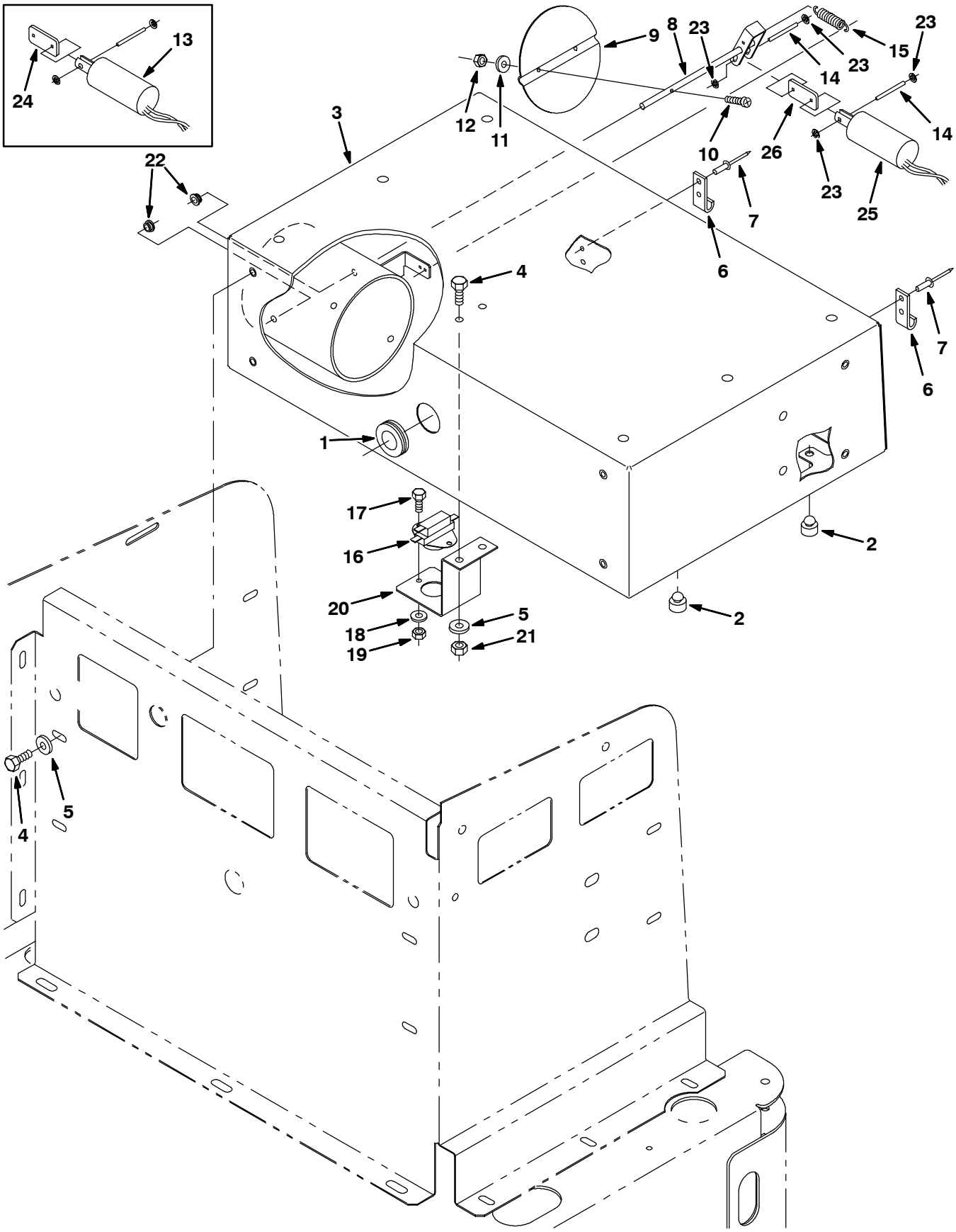

352626 - IC

Fig. 33 - Vacuum Fan Box Group

Ref.	Tennant Part No.	Machine Serial Number	Description	Qty.
1	81697	(000000-)	Grommet, Rubber	1
2	83165	(000000-)	Bumper, Rubber	3
3	81691	(000000-)	Box Assy, Vacuum W/Label	1
4	06942	(000000-)	Screw, Hex, M06-1.0 X 16, 8.8	10
5	32490	(000000-)	Washer, Flat, .25 Hard	10
6	81816	(000000-)	Bracket, Latch	2
7	06524	(000000-)	Rivet, Pop	6
8	384403	(000000-)	Rod, Damper	1
9	384114	(000000-)	Plate, Damper	1
10	09146	(000000-)	Screw, Pan	2
11	32975	(000000-)	Washer, Lock	2
12	07807	(000000-)	Nut, Hex M3 Ss	2
13	384169	(000000-002257)	Kit, Ci, Sloenoid, Damper	1
14	384410	(000000-)	Pin, Pivot	2
15	378769	(000000-)	Spring, Tension	1
16	367679	(000000-)	Thermostat, Spdt	1
17	09206	(000000-)	Screw, Hex M4	2
18	19065	(000000-)	Washer, Flat	2
19	02850	(000000-)	Nut, M4	2
20	81963	(000000-)	Bracket, Mount	1
21	08708	(000000-)	Nut, M6	2
22	80921	(000000-)	Bearing, Snap-In	2
23	384411	(000000-)	Retainer	4
24	384440	(000000-002257)	Link	1
25	384464	(002258-)	Solenoid, 12 Vdc, Damper	1
26	384496	(002258-)	Link, .12T 0.7W 1.5LL	1

Fig. 34 - Hopper Group

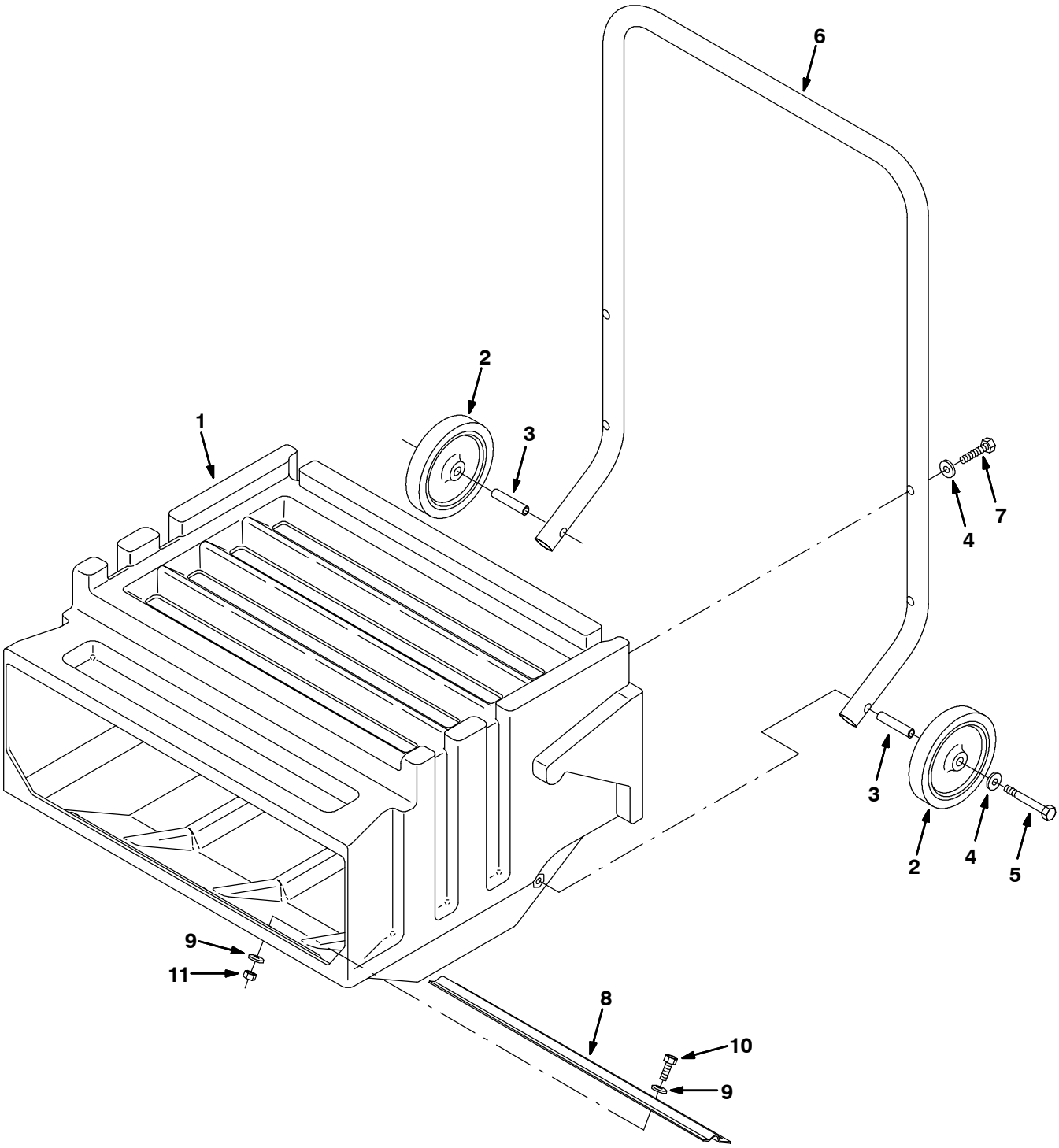

352139 - NA, CE

Fig. 34 - Hopper Group

Ref.	Tennant Part No.	Machine Serial Number	Description	Qty.
1	83447	(000000–)	Hopper, Rear	1
2	81860	(000000–)	Wheel, Hopper	2
3	81870	(000000–)	Tube, Axle	2
4	32491	(000000–)	Washer, Flat, .31 Hard	6
5	39279	(000000–)	Screw, Hex, M08–1.25 X 70, 8.8	2
6	81911	(000000–)	Handle, Hopper, (Painted)	1
7	41342	(000000–)	Screw, Hex, M08–1.25 X 40, 8.8	4
8	384413	(000000–)	Bracket, Lip, Hopper	1
9	32490	(000000–)	Washer, Flat, .25 Hard	10
10	08716	(000000–)	Screw, Hex, M06–1.0 X 20, Ss	5
11	08708	(000000–)	Nut, Hex, Lock, M06–1.0, Nl	5

Fig. 35 - Filter Shaker Group

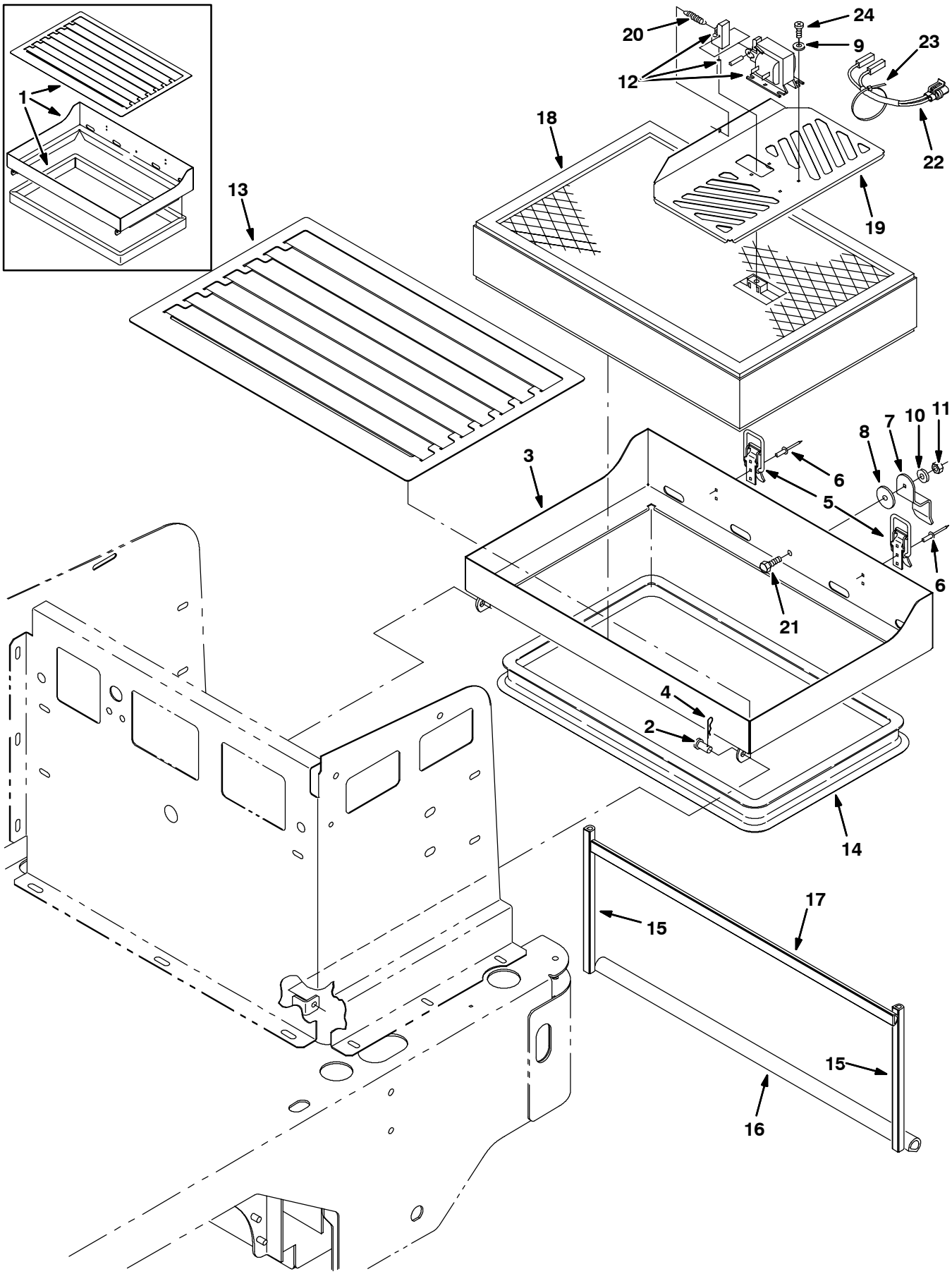

352628 - IC, NA

Fig. 35 - Filter Shaker Group

	Ref.	Tennant Part No.	Machine Serial Number	Description	Qty.
	1	83542	(000000-001215)	Panel Assy, Filter	1
	2	46800	(000000-)	Pin, Clevis	2
	3	83439	(001216-)	Panel Weldt, Filter	1
	4	08085	(000000-)	Pin, Hair Cotter	2
	5	23709	(000000-)	Catch, Draw Pull	2
	6	41732	(000000-)	Rivet, Pop	4
	7	81889	(000000-)	Bracket, Latch, Hopper	1
	8	33518	(000000-)	Washer	1
	9	19065	(000000-)	Washer, Flat, #08	4
	10	32490	(000000-)	Washer, Flat, .25 Hard	2
	11	08708	(000000-)	Nut, Hex, Lock, M06-1.0, Nl	1
	12	379890	(000000-)	Solenoid, Filter Shaker	1
	13	83427	(001216-)	Panel, Perma-Filter	1
	14	83426	(001216-)	Gasket, Filter Panel	1
▽		83039	(000000-)	Seal Kit, Hopper, 6100	1
▲	15	81965	(000000-)	Seal, Bulb .50 X .50 X 9.19Lg	2
▲	16	83115	(000000-)	Seal, Foam	1
▲	17	81966	(000000-)	Seal, Bulb .38 X .75 X 22.62Lg	1
	18	375210	(000000-)	Filter Pkg, Dust, Panel, 62 Pleats	1
	19	81803	(000000-)	Panel Wldt, Shaker	1
	20	81812	(000000-)	Spring, Tension, Shaker	1
	21	06943	(000000-)	Screw, Hex, M06-1.0x20, 8.8	1
	22	83384	(001286-)	Harness, Shaker	1
	23	49266	(001286-)	Tie, Cable 1.75D Max 7.50Lg	1
	24	49697	(000000-)	Screw, Pan, M04-0.7 X 10, Ss	4

Fig. 36 - Electrical Schematic, Gasoline

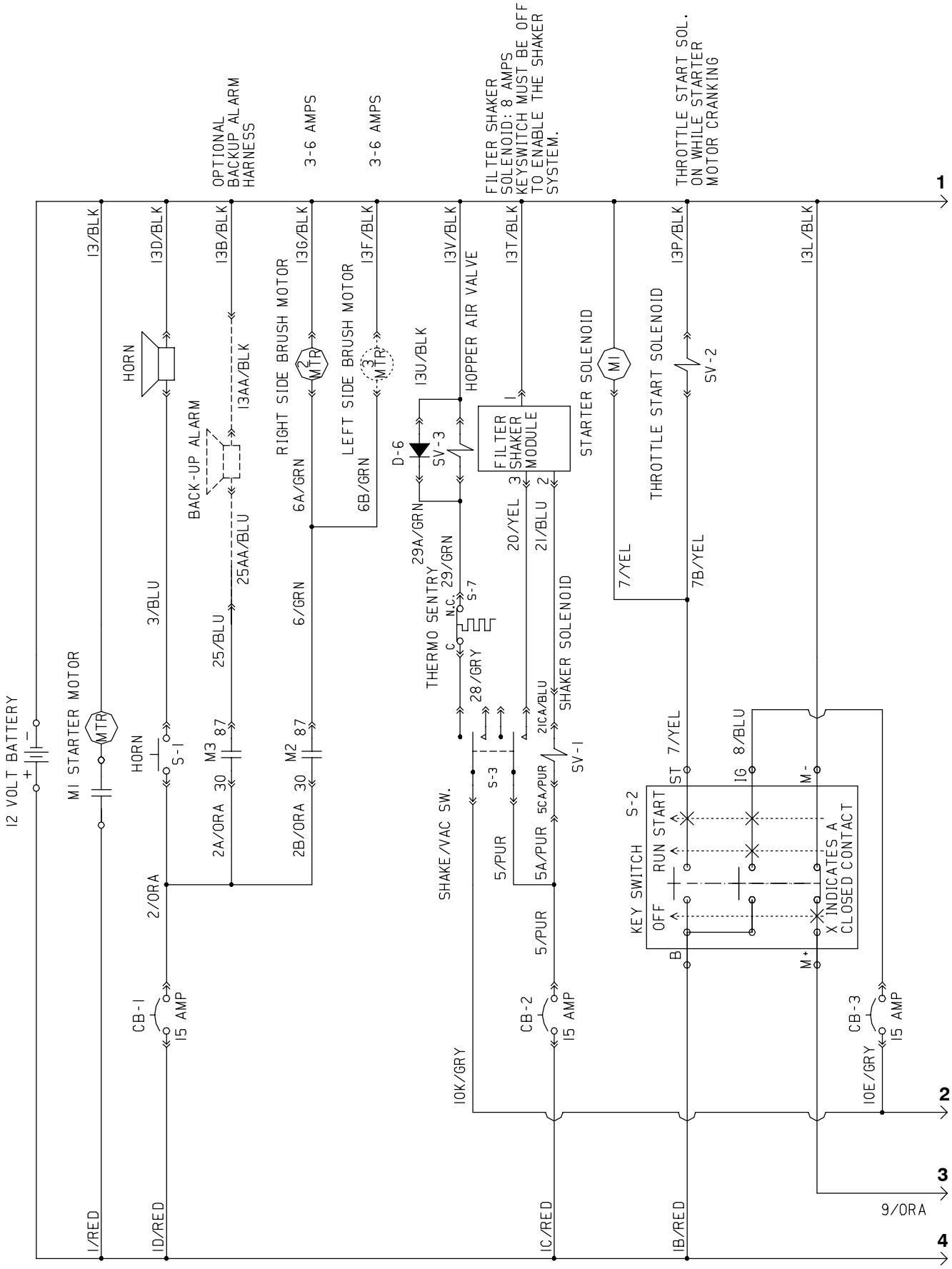

Fig. 36 - Electrical Schematic, Gasoline

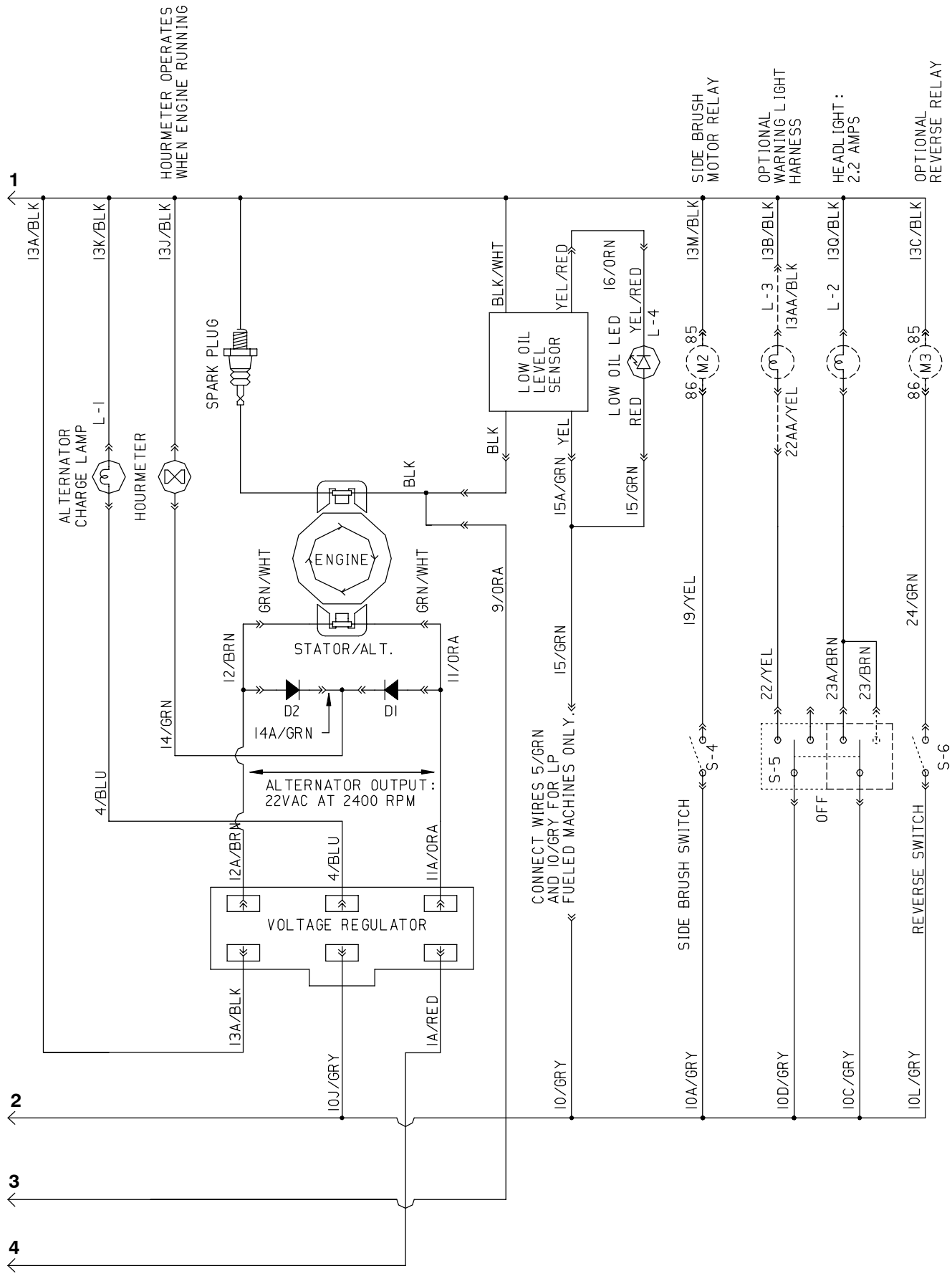

Fig. 37 - Electrical Schematic, LPG

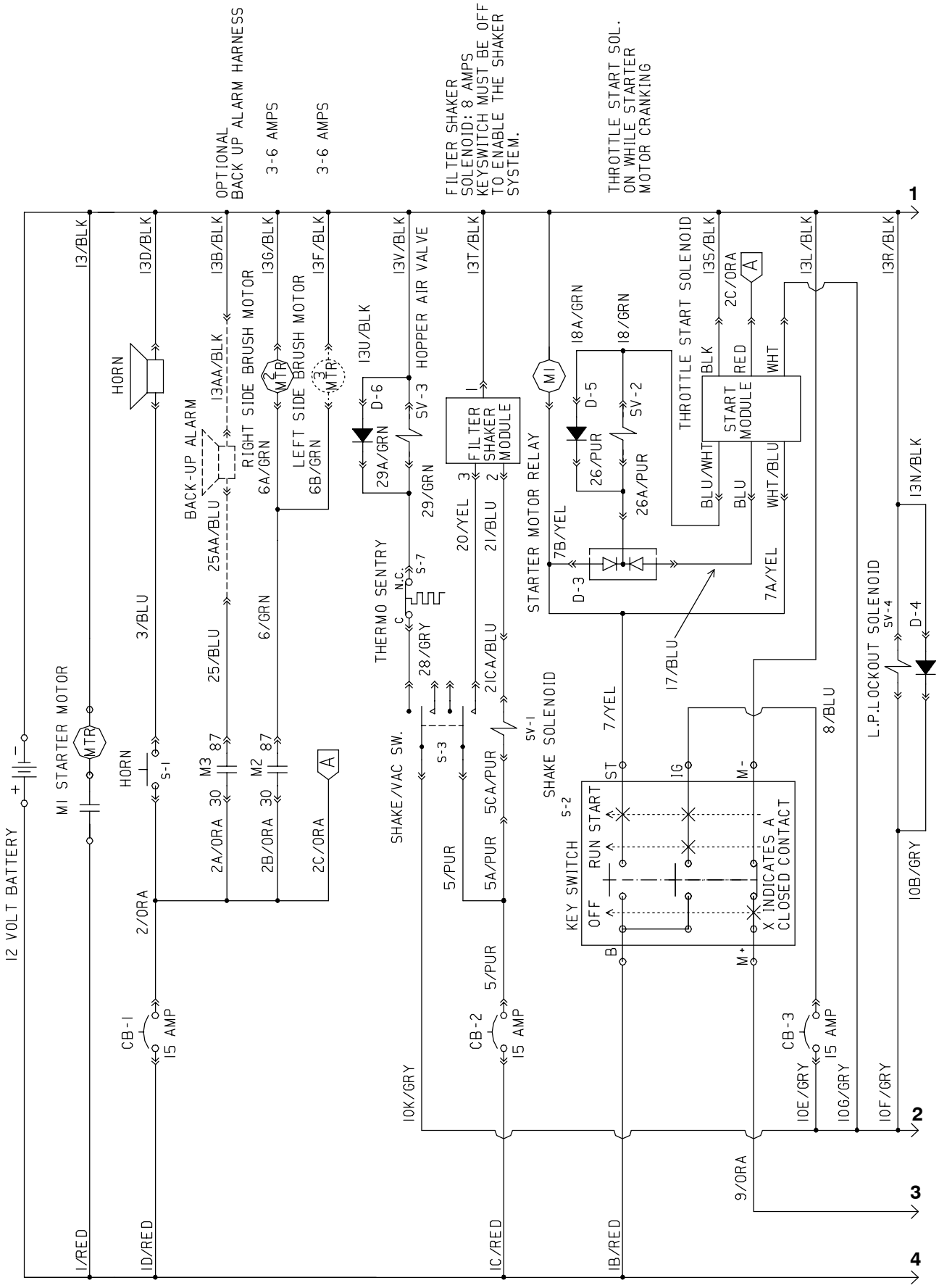

Fig. 37 - Electrical Schematic, LPG

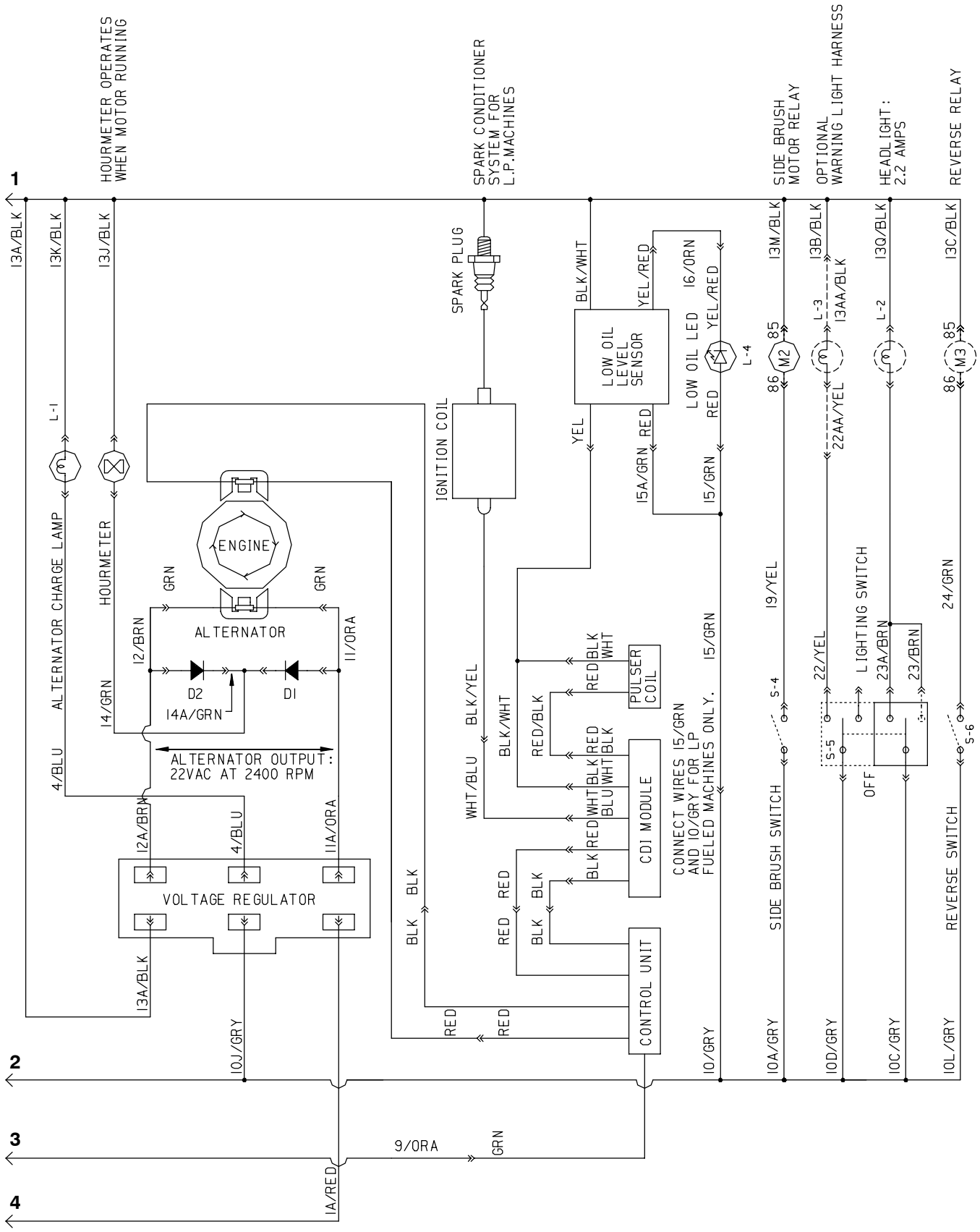

Fig. 38 - Wire Harness Group

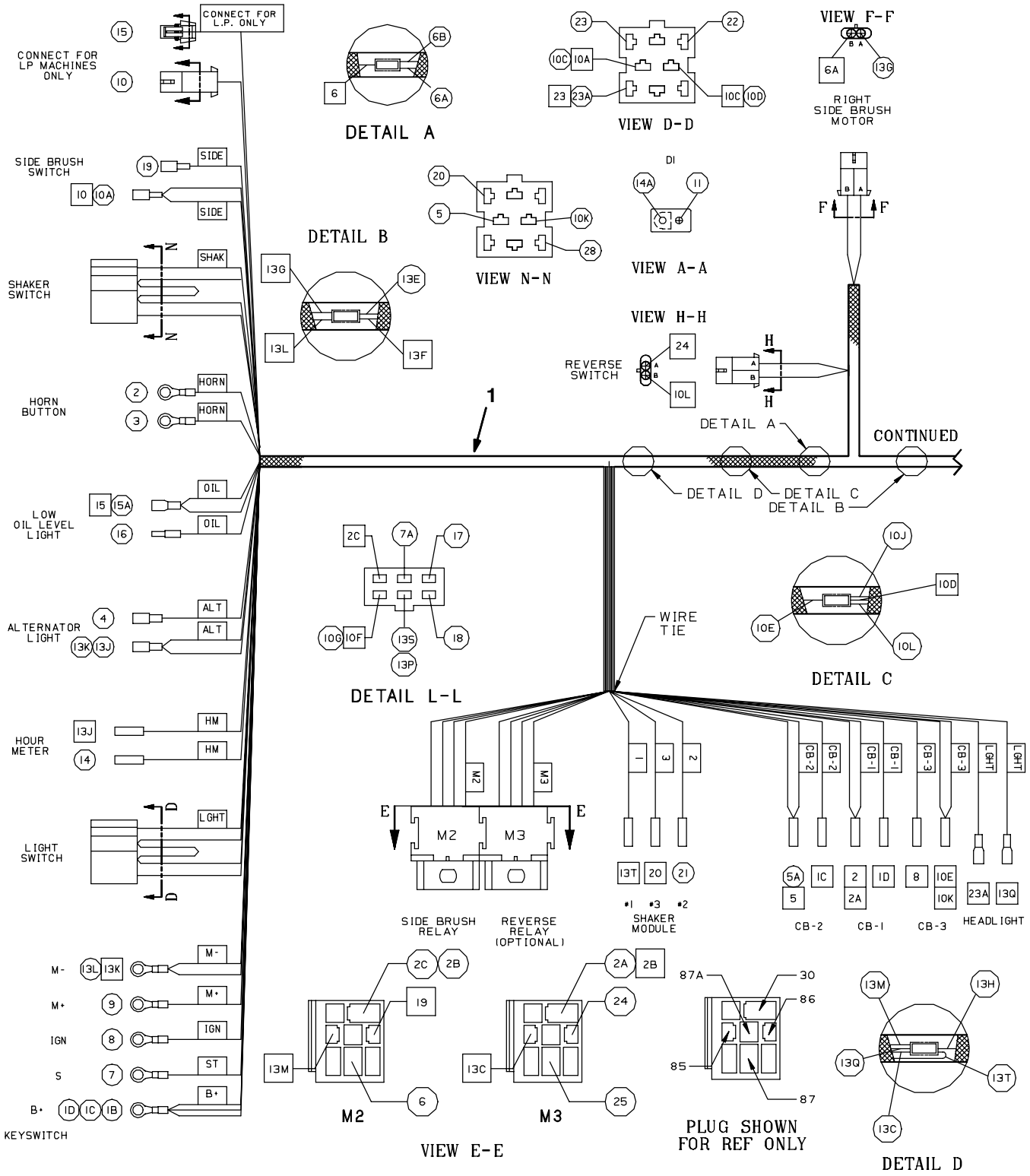

Fig. 38 - Wire Harness Group

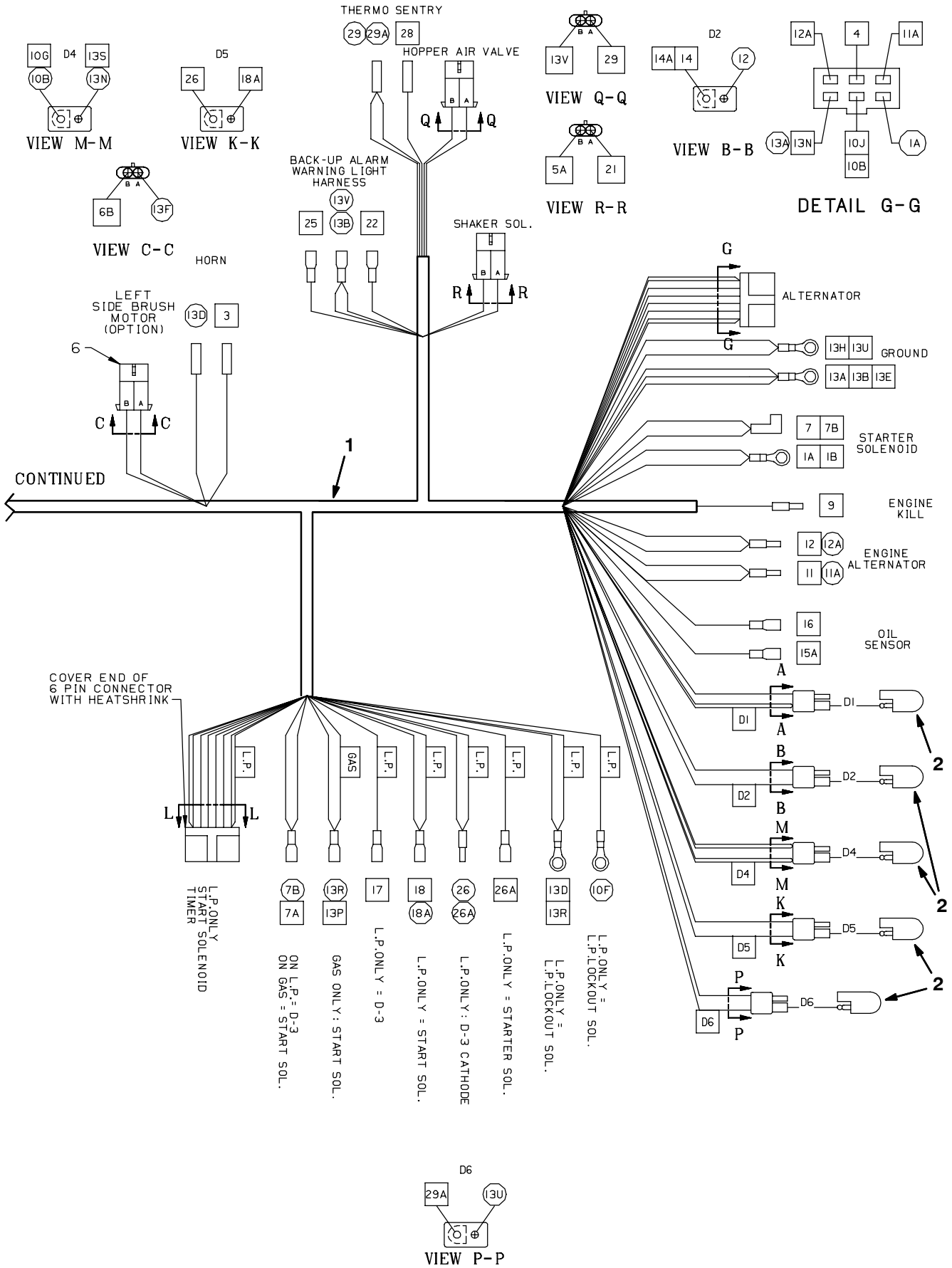

352631 - IC

Fig. 38 - Wire Harness Group

Ref.	Tennant Part No.	Machine Serial Number	Description	Qty.
1	81937	(000000-)	Harness, Wire, Main, 6100 G/LP	1
2	222290	(000000-)	Diode, Electric Plug	5

Fig. 39 - Label Group

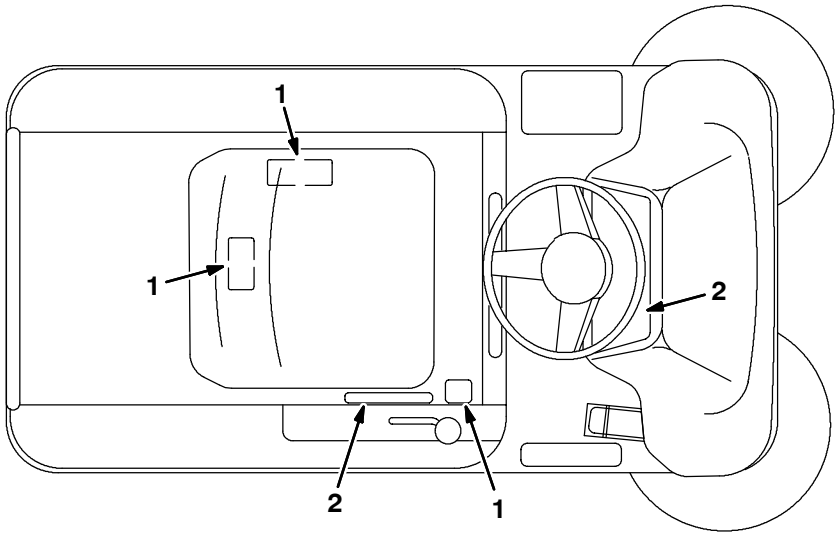

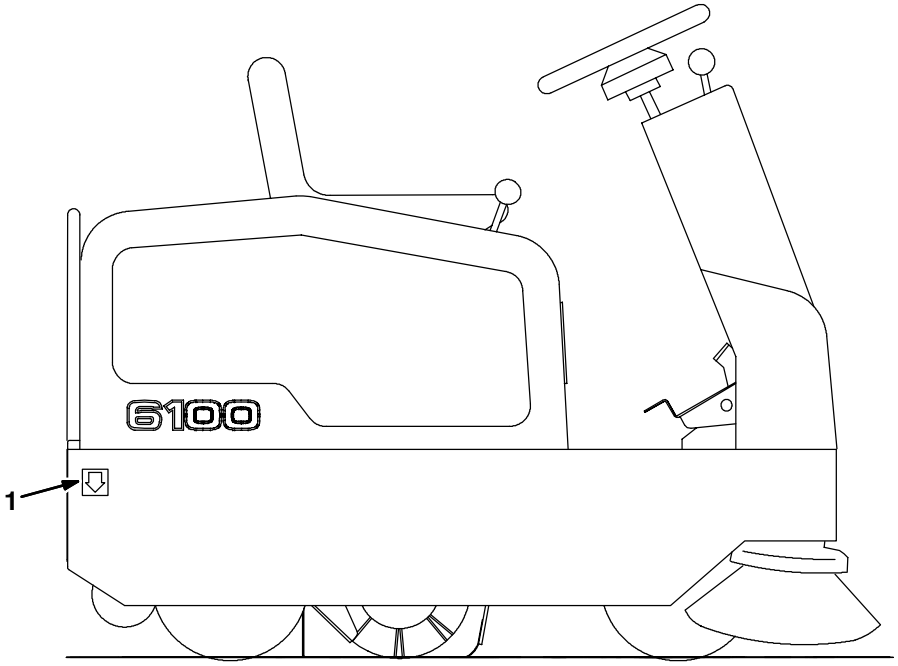

352201 - IC, NA

Ref.	Tennant Part No.	Machine Serial Number	Description	Qty.
1	83520	(000000-)	Label Set,Info&Hzd	1
2	83519	(000000-)	Label Set, Oper, 6100 G/LP	1

SECTION 3

Contents **Page**

Fig. 1 – Quick Mop™ Kit 3-2
Fig. 2 – Side Brush Lift Group, Left Hand 3-4
Fig. 3 – Side Brush Motor Group, Left Hand 3-6
Fig. 4 – Side Brush Alternator Group, Left Hand 3-8
Fig. 5 – Flashing Light Kit 3-10
Fig. 6 – Backup Alarm Kit 3-12
Fig. 7 – Seat Belt Kit 3-14
Fig. 8 – Seat Slide Kit 3-15
Fig. 9 – Side Molding Kit 3-16
Fig. 10 – Worklight Kit 3-17
Fig. 11 – Non–Marking Tire Kit 3-18
Fig. 12 – Fire Extinguisher Kit 3-19
Fig. 13 – Documentation Group 3-20

Fig. 1 - Quick Mop™ Kit

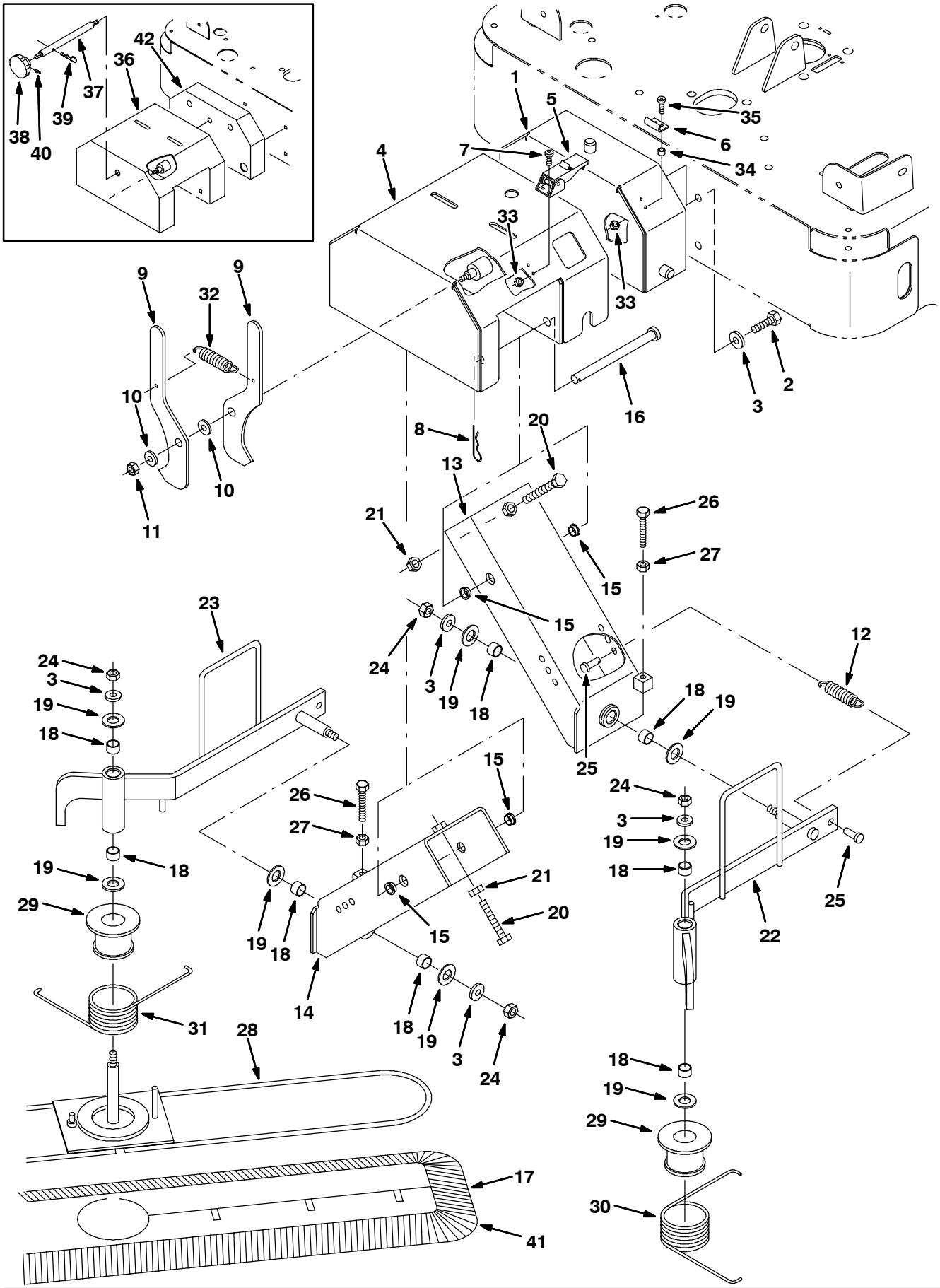

352180 - NA

Fig. 1 - Quick Mop™ Kit

	Ref.	Tennant Part No.	Machine Serial Number	Description	Qty.
▽		83199	(000000-)	Quick Mop Kit, 6100	1
▲	1	384246	(xxxxxx-)	Bumper Wldt, V-Mop	1
▲	2	39283	(000000-)	Screw, Hex, M10-1.5 X 25, 8.8	4
▲	3	32492	(000000-)	Washer, Flat, .38 Hard	8
▲	4	384247	(xxxxxx-)	Housing Wldt, V-Mop	1
▲	5	384287	(xxxxxx-)	Latch, Door	2
▲	6	384419	(xxxxxx-)	Bracket, Keeper	2
▲	7	49697	(xxxxxx-)	Screw, Pan, M04-0.7 X 10, Ss	4
▲	8	02942	(000000-)	Pin, Hair Cotter	2
▲	9	83338	(000000-)	Plate, Latch	2
▲	10	86860	(000000-)	Bearing, Thrust 0.50B 0.87D 0.06W	2
▲	11	08709	(000000-)	Nut, Hex, Lock, M08-1.25,Nl	1
▲	12	15047	(000000-)	Spring, Extension	2
▲	13	83313	(000000-)	Channel Wldt, Lift Lh	1
▲	14	83315	(000000-)	Channel Wldt, Lift Rh	1
▲	15	15648	(000000-)	Bearing, Flange	4
▲	16	51225-1	(000000-)	Pin, Clevis	2
▲	17	83347	(000000-)	Mop, Dust	2
▲	18	07449	(000000-)	Bearing, Fiberglide	8
▲	19	64425	(000000-)	Washer	8
▲	20	76438	(000000-)	Screw, Hex, M10-1.5 X 90, Fl	2
▲	21	39312	(000000-)	Nut, Hex, Std, M10-1.5	2
▲	22	83318	(000000-)	Arm Wldt, Lift Lh	1
▲	23	83324	(000000-)	Arm Wldt, Lift Rh	1
▲	24	41430	(000000-)	Nut, Hex, Lock, M10-1.5, Nl	4
▲	25	39019	(000000-)	Pin, Clevis	4
▲	26	363976	(000000-)	Scr-Hex M 8X1.25 60 Full Thd	2
▲	27	39311	(000000-)	Nut, Hex, Std, M08-1.25	2
▲	28	83325	(000000-)	Frame Wldt, V-Mop	2
▲	29	83332	(000000-)	Spacer, Spring	2
▲	30	80317	(000000-)	Spring, Torsion	1
▲	31	80318	(000000-)	Spring, Torsion	1
▲	32	87816	(000000-)	Spring, Extension	1
▲	33	02850	(xxxxxx-)	Nut, Hex, Lock, M04-0.7, Nl	8
▲	34	65441	(xxxxxx-)	Spacer	4
▲	35	12323	(xxxxxx-)	Screw, Pan, M04 X 0.7 X 20, Ss	4
	36	83335	(000000- xxxxxx)	Housing Wldt, V-Mop	1
	37	83341	(000000- xxxxxx)	Rod, Threaded	1
	38	06506	(000000- xxxxxx)	Knob	1
	39	02942	(000000- xxxxxx)	Pin, Hair Cotter	1
	40	39323	(000000- xxxxxx)	Screw, Set, #10-32 X 0.38,	1
	41	83348	(000000-)	Mop, Dust, Industrial	1
	42	83342	(000000- xxxxxx)	Bumper Wldt, V-Mop	1

Fig. 2 - Side Brush Lift Group, Left Hand

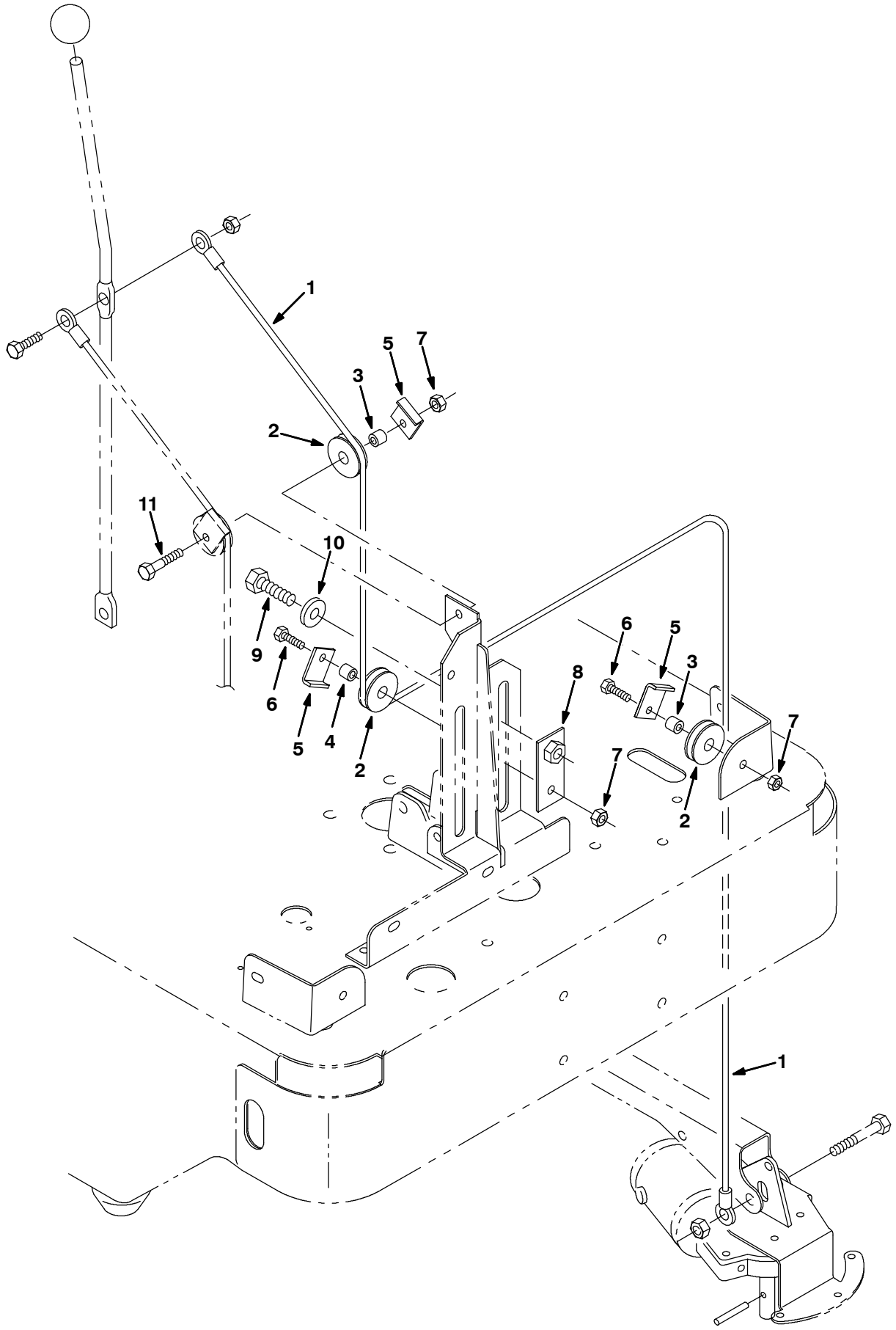

352174– ALL

Fig. 2 - Side Brush Lift Group, Left Hand

NOTE: Side Brush Kit, Left Hand, Tennant Part Number 83223, includes Fig. 2, Fig. 3, and Fig. 4

Ref.	Tennant Part No.	Machine Serial Number	Description	Qty.
1	81785	(000000–)	Cable, Sidebrush Lift Lh	1
2	74391	(000000–)	Pulley	3
3	222460	(000000–)	Sleeve	2
4	80395	(000000–)	Sleeve	1
5	54400	(000000–)	Angle	3
6	76570	(000000–)	Screw, Hex, M08–1.25 X 30, 8.8	2
7	08709	(000000–)	Nut, Hex, Lock, M08–1.25,Nl	3
8	81955	(000000–)	Plate, Sidebrush Lift	1
9	06967	(000000–)	Scr Hex M12X1.75 20	1
10	32493	(000000–)	Washer, Flat, .50 Hard	1
11	06956	(000000–)	Screw, Hex, M08–1.25 X 45, 8.8	1

Fig. 3 - Side Brush Motor Group, Left Hand

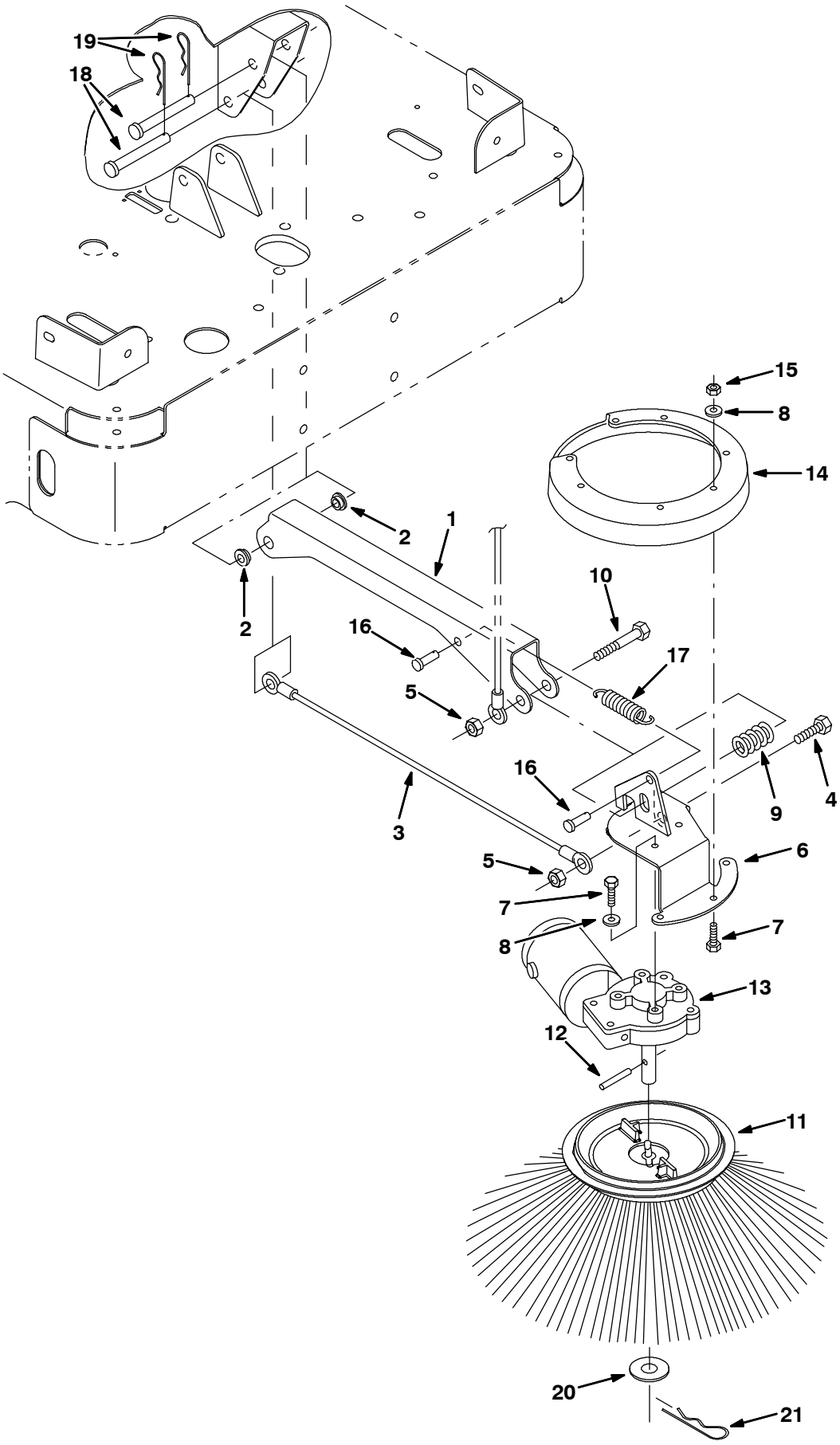

352176 - IC

Fig. 3 - Side Brush Motor Group, Left Hand

NOTE: Side Brush Kit, Left Hand, Tennant Part Number 83223, includes Fig. 2, Fig. 3, and Fig. 4

	Ref.	Tennant Part No.	Machine Serial Number	Description	Qty.
	1	81783	(000000-)	Channel, Mtg, Sidebrush	1
	2	15648	(000000-)	Bearing, Flange	2
	3	81784	(000000-)	Cable, Sidebrush	1
	4	41345	(000000-)	Screw, Hex, M12-1.75 X 25, 8.8	1
	5	08711	(000000-)	Nut, Hex, Lock, M12-1.75,Nl	2
	6	81750	(000000-)	Bracket Wldt, Sidebrush	1
	7	15678	(000000-)	Screw, Hex, M06-1.0 X 16, Ss	9
	8	01684	(000000-)	Washer, Flat, .25 Ss	9
	9	87242	(000000-)	Spring,Die .50 Id 1.00 Od 1.25	1
	10	06972	(000000-)	Screw, Hex, M12-1.75 X 60, 8.8	1
	11	80042	(000000-)	Brush, Side	1
	12	11516	(000000-)	Pin	1
▽	13	379212	(000000-)	Motor, Electric, 12V	1
▲		81919	(000000-)	Brush&Spring Assy Se	1
▲		80127	(000000-)	Cap, Brush	2
▲		369795	(000000-)	Brushholder	2
▲		369796	(000000-)	Clip	2
	14	81822	(000000-)	Guard,Sidebrush	1
	15	08712	(000000-)	Nut, Hex, Lock, M06-1.0, Nl,Ss	5
	16	39019	(000000-)	Pin, Clevis	2
	17	15047	(000000-)	Spring, Extension	1
	18	06279	(000000-)	Pin, Clevis	2
	19	44906	(000000-)	Pin, Hair Cotter	2
	20	04400	(000000-)	Washer, Flat, M16, 17 X30X3Ss	1
	21	02942	(000000-)	Pin, Hair Cotter	1

Fig. 4 - Side Brush Alternator Group, Left Hand

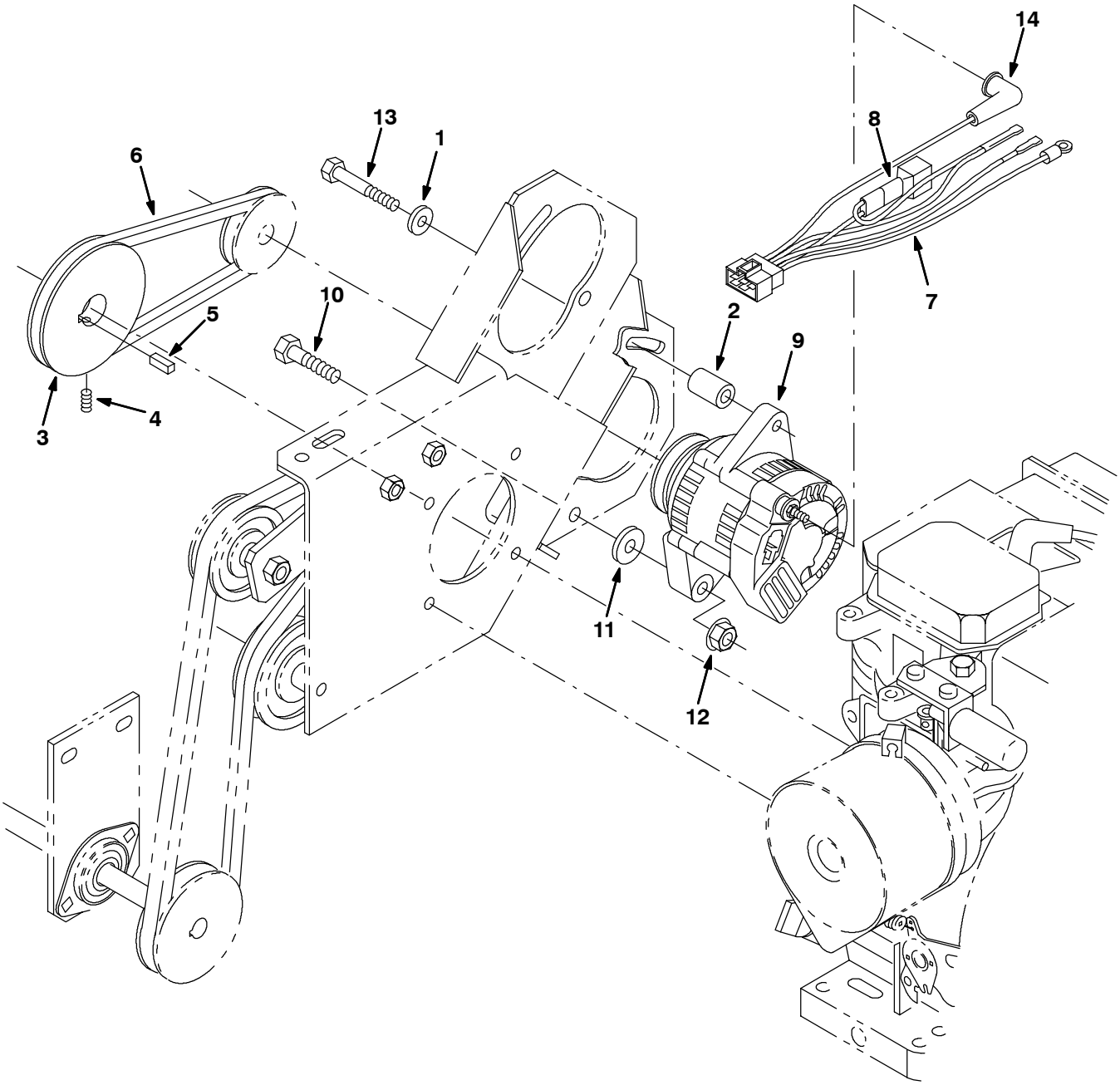

353516 - IC

Fig. 4 - Side Brush Alternator Group, Left Hand

NOTE: Side Brush Kit, Left Hand, Tennant Part Number 83223, includes Fig. 2, Fig. 3, and Fig. 4

	Ref.	Tennant Part No.	Machine Serial Number	Description	Qty.
	1	41186	(000000–)	Washer, Belleville, .31	1
	2	384459	(000000–)	Tube, 0.75d 0.41b 1.2l Stl	1
	3	384458	(000000–)	Sheave, 3l 1 Groove, 4.00pd	1
	4	01750	(000000–)	Screw, Set, M06 X 1.0 X 16, Soc	2
	5	00926	(000000–)	Key, Sq, 0.25 X 0.25, 00.75l	1
	6	384455	(000000–)	Belt, V, 3l, 26.0l	1
▽	7	384461	(000000–)	Harness, Alternator	1
▲	8	222290	(000000–)	Diode, Ele, Plug	1
	9	361387	(000000–)	Alternator	1
	10	06962	(000000–)	Screw, Hex, M10 X 1.5 X 45, 8.8	1
	11	13248	(000000–)	Washer, 0.40b 1.12d .12, Stl, Pl	1
	12	07792	(000000–)	Nut, Hex, Flng, M10 X 1.5	1
	13	06957	(000000–)	Screw, Hex, M08 X 1.25 X 60, 8.8	1
	14	02076	(000000–)	Boot, 90deg .50d .57d X .84	1

Fig. 5 - Flashing Light Kit

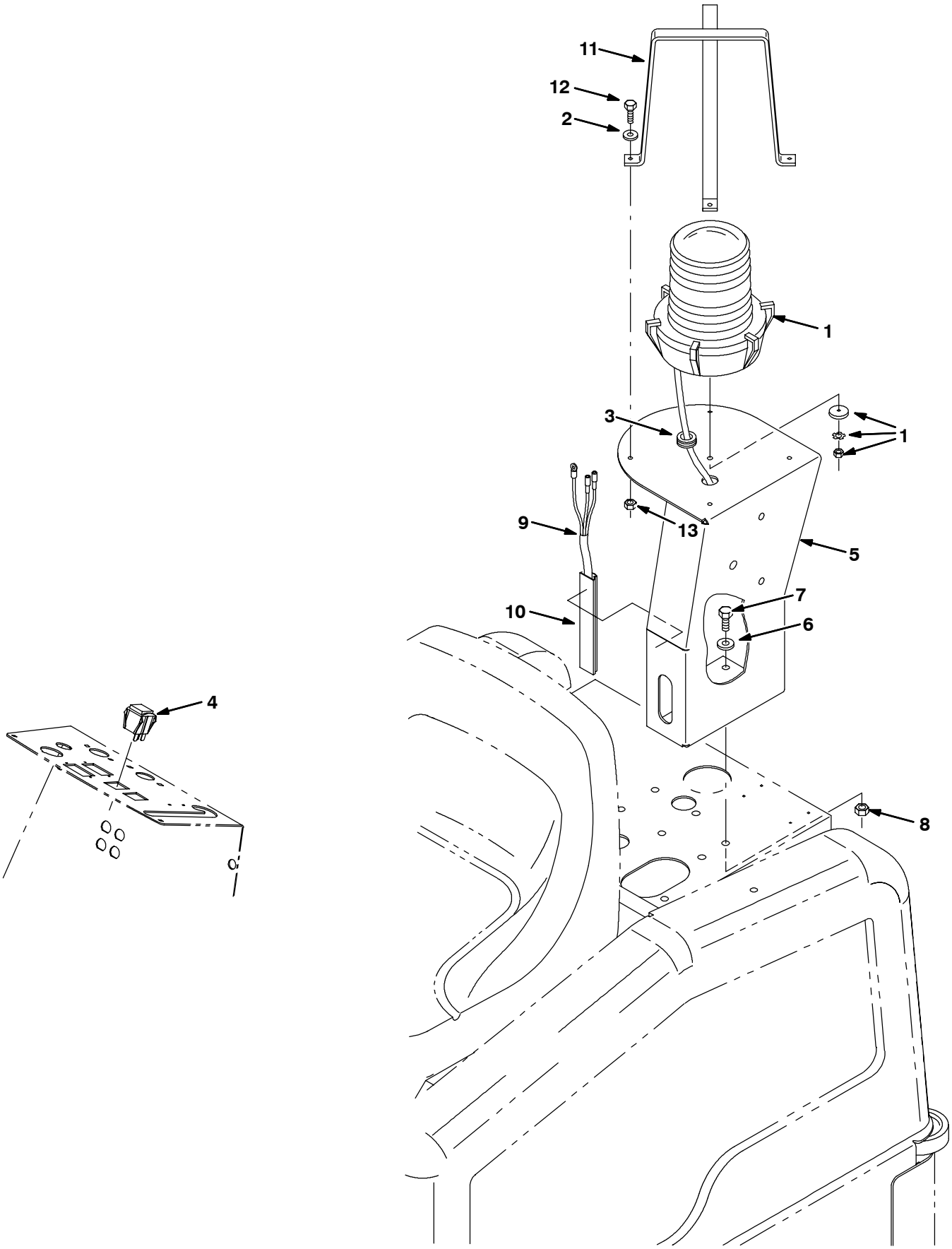

352657 - IC, NA

Fig. 5 - Flashing Light Kit

	Ref.	Tennant Part No.	Machine Serial Number	Description	Qty.
▽		83207	(000000-)	Light Kit, Flsh Lrc 12V	1
▲▽	1	83160	(000000-)	Light, Flsh, Amber, 12V	1
▲▲		45779	(000000-)	Lamp	1
▲▲		58520	(000000-)	Lens,Flashing Lite Amber	1
▲	2	19066	(000000-)	Washer, Flat, 10	4
▲	3	10632-2	(000000-)	Grommet, Rbr, 0.63Id, For .13Matl	1
▲	4	360520	(000000-)	Switch, Rocker, Spdt, 3Pos	1
▲	5	384400	(000000-)	Pedestal	1
▲	6	39349	(000000-)	Washer, Flat, .31 Sae	3
▲	7	16735	(000000-)	Screw, Hex, M08-1.25 X 16, 8.8	3
▲	8	07791	(000000-)	Nut, Hex, Flange, M08-1.25	3
▲	9	81934	(000000-)	Harness, Wire, Warning/Backup	1
▲	10	72114	(000000-)	Duct, Vinyl	1
▲	11	361940	(000000-)	Guard, Lights	1
▲	12	09252	(000000-)	Screw, Hex, M05-0.8 X 20	4
▲	13	06549	(000000-)	Nut, Hex, Lock, M05-0.8, Nl	4
		58518	(000000-)	Lens,Flashing Lite Red	1
		58519	(000000-)	Lens,Flashing Lite Blue	1

Fig. 6 - Backup Alarm Kit

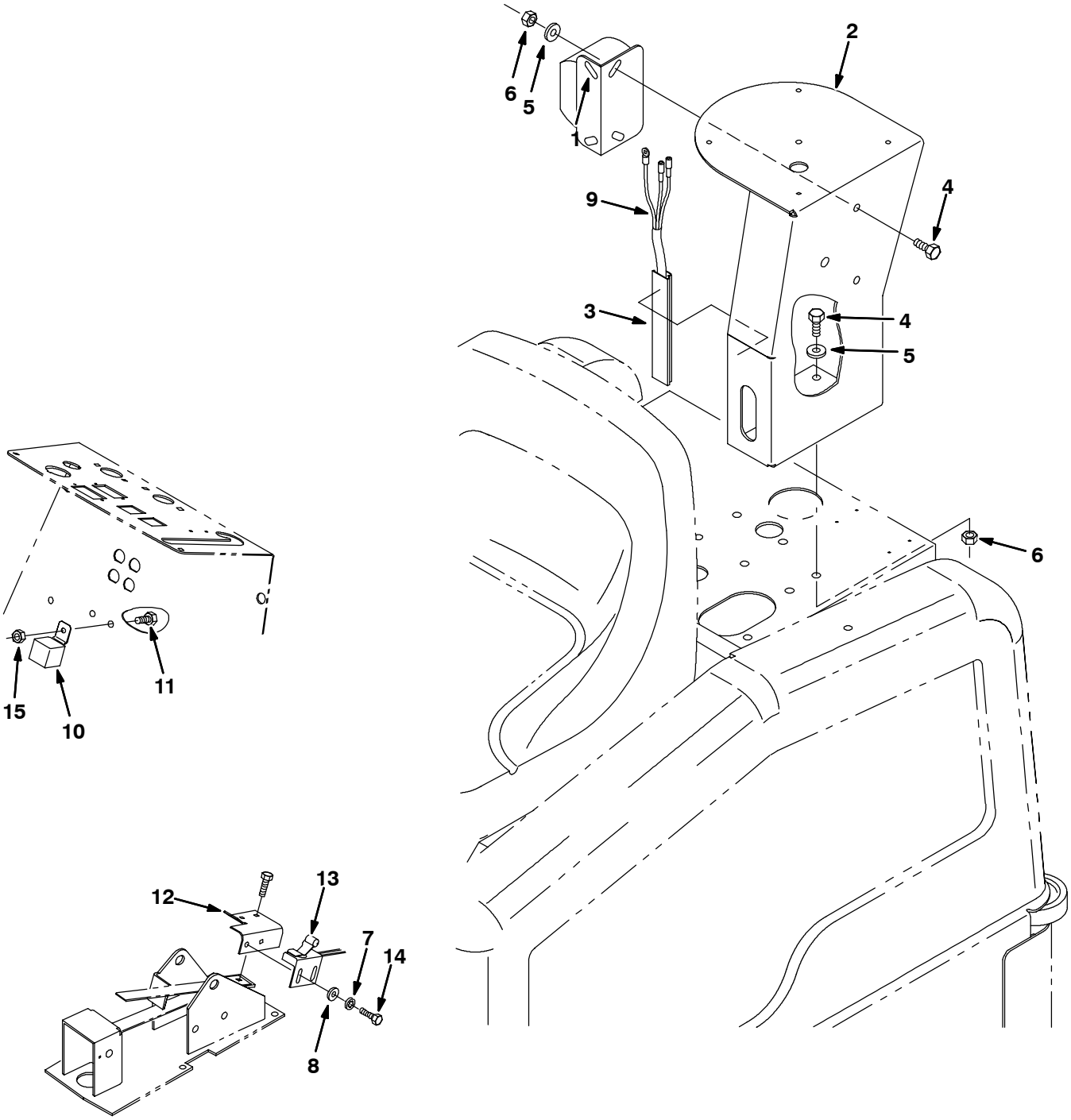

352659 - IC

Fig. 6 - Backup Alarm Kit

	Ref.	Tennant Part No.	Machine Serial Number	Description	Qty.
▽		83225	(000000-)	Alarm Kit, Backup, 12V, 6100	1
▲	1	83161	(000000-)	Horn Assy, Back-Up Alarm, 12V	1
▲	2	384400	(000000-)	Pedestal	1
▲	3	72114	(000000-)	Duct, Vinyl	1
▲	4	16735	(000000-)	Screw, Hex, M08-1.25 X 16, 8.8	5
▲	5	39349	(000000-)	Washer, Flat, .31 Sae	5
▲	6	07791	(000000-)	Nut, Hex, Flange, M08-1.25	5
▲	7	32980	(000000-)	Washer, Lock, Int, #10	2
▲	8	19066	(000000-)	Washer, Flat, #10	2
▲	9	81934	(000000-)	Harness, Wire, Warning/Backup	1
▲	10	57804	(000000-)	Relay, 12Vdc, 40Amp Spdt	1
▲	11	09145	(000000-)	Screw, Pan, M06-1.0 X 16	1
▲	12	83265	(000000-)	Bracket, Mtg, Switch	1
▲	13	59965	(000000-)	Switch, Roller	1
▲	14	12312	(000000-)	Screw, Hex, M05-0.8 X 12, 8.8	2
▲	15	08708	(000000-)	Nut, Hex, Lock, M06-1.0, Nl	1

Fig. 7 - Seat Belt Kit

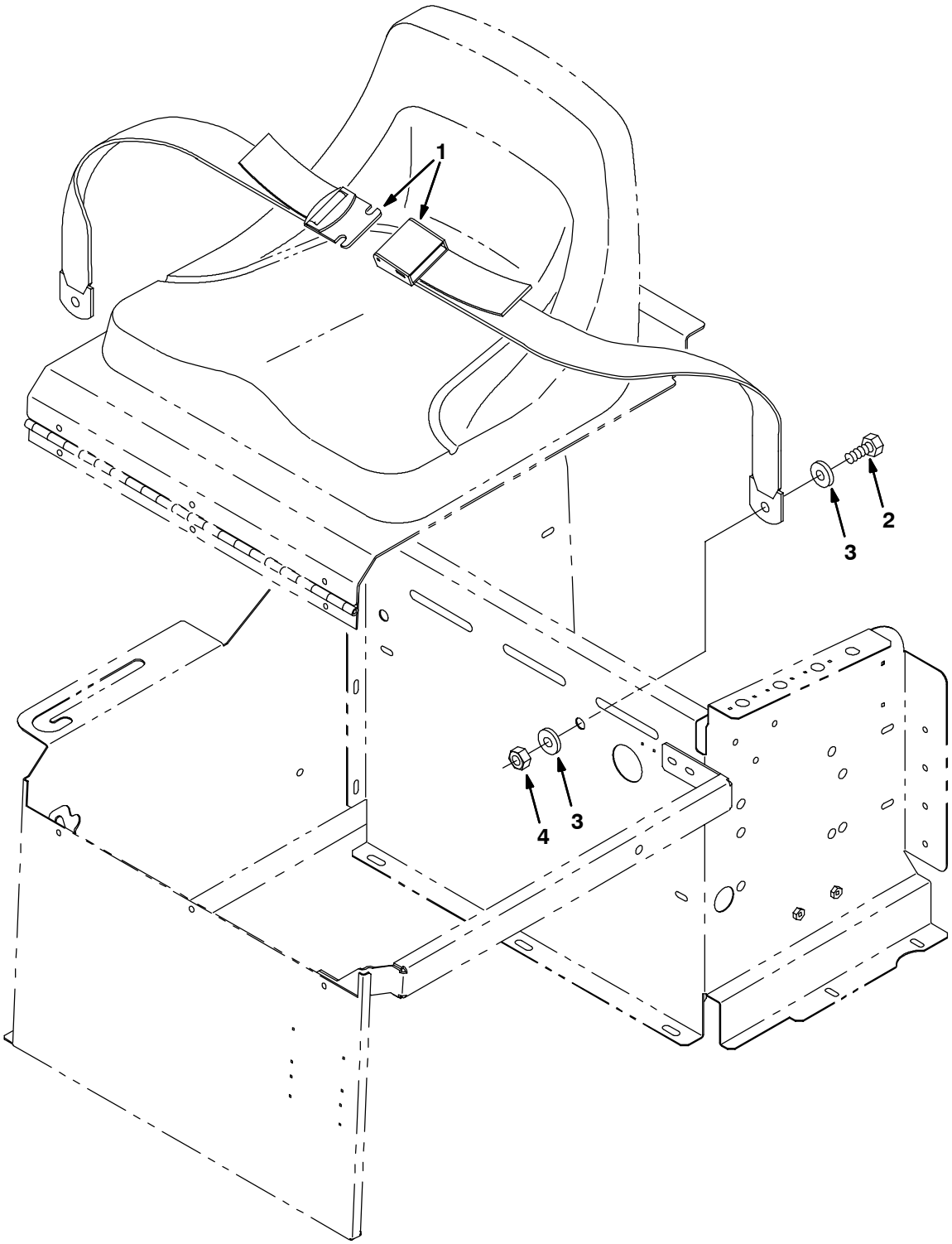

352188 - ALL

	Ref.	Tennant Part No.	Machine Serial Number	Description	Qty.
▽		83267	(000000-)	Seatbelt Kit 6100	1
▲	1	30533	(000000-)	Belt, Seat	1
▲	2	41345	(000000-)	Screw, Hex, M12-1.75 X 25, 8.8	2
▲	3	32486	(000000-)	Washer, Flat, .50 Sae	4
▲	4	08711	(000000-)	Nut, Hex, Lock, M12-1.75,NI	2

Fig. 8 - Seat Slide Kit

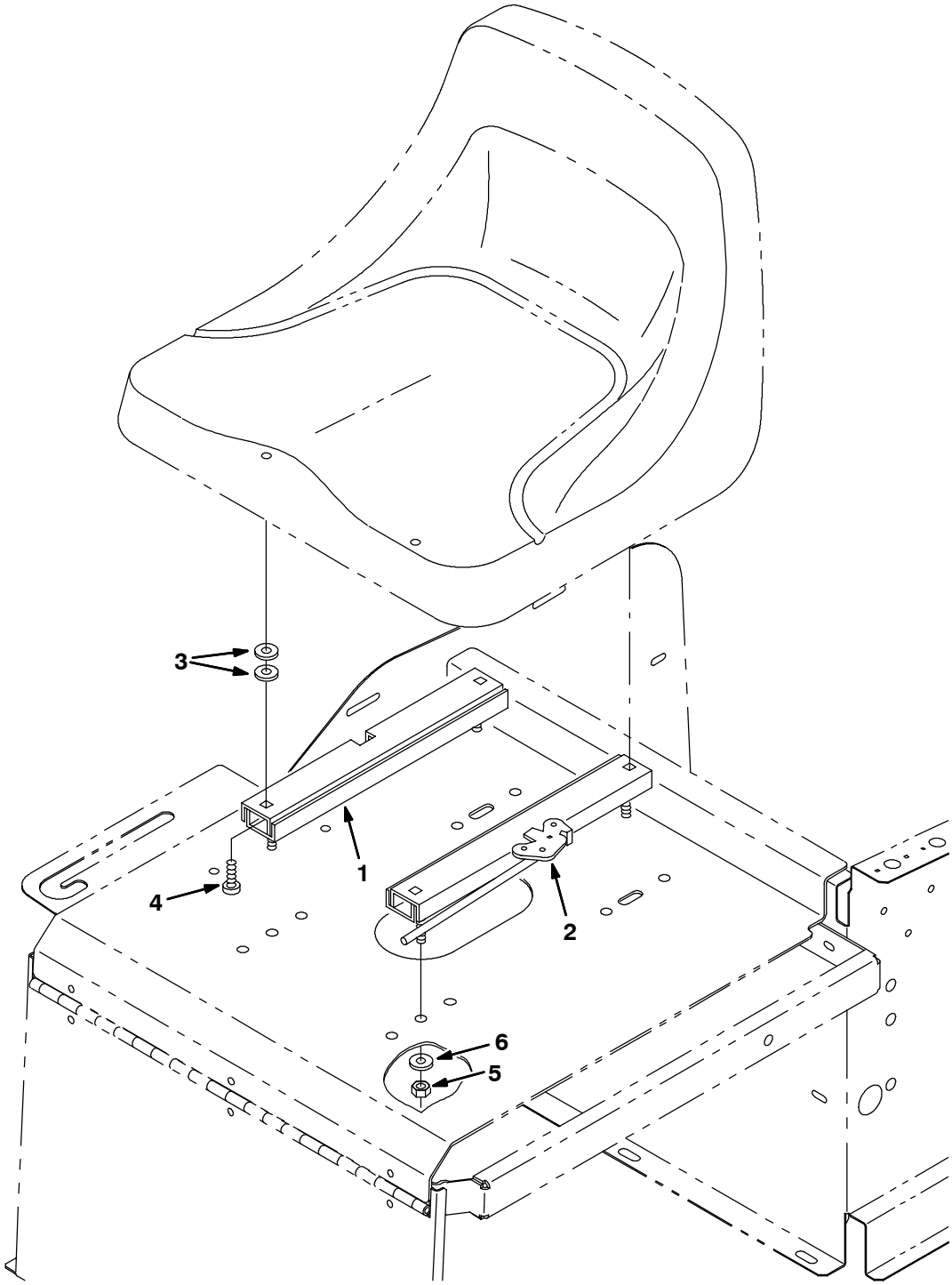

352190 - NA

	Ref.	Tennant Part No.	Machine Serial Number	Description	Qty.
▽		83194	(000000-)	Seat Kit, Slides	1
▲	1	360369	(000000-)	Rail	1
▲	2	360370	(000000-)	Rail	1
▲	3	69461	(000000-)	Washer	8
▲	4	25537	(000000-)	Screw, Pan, .31-18 X 0.75, G1	4
▲	5	32983	(000000-)	Nut, Hex, Lock, .31-18, Nl	4
▲	6	32491	(000000-)	Washer, Flat, .31 Hard	4

Fig. 9 - Side Molding Kit

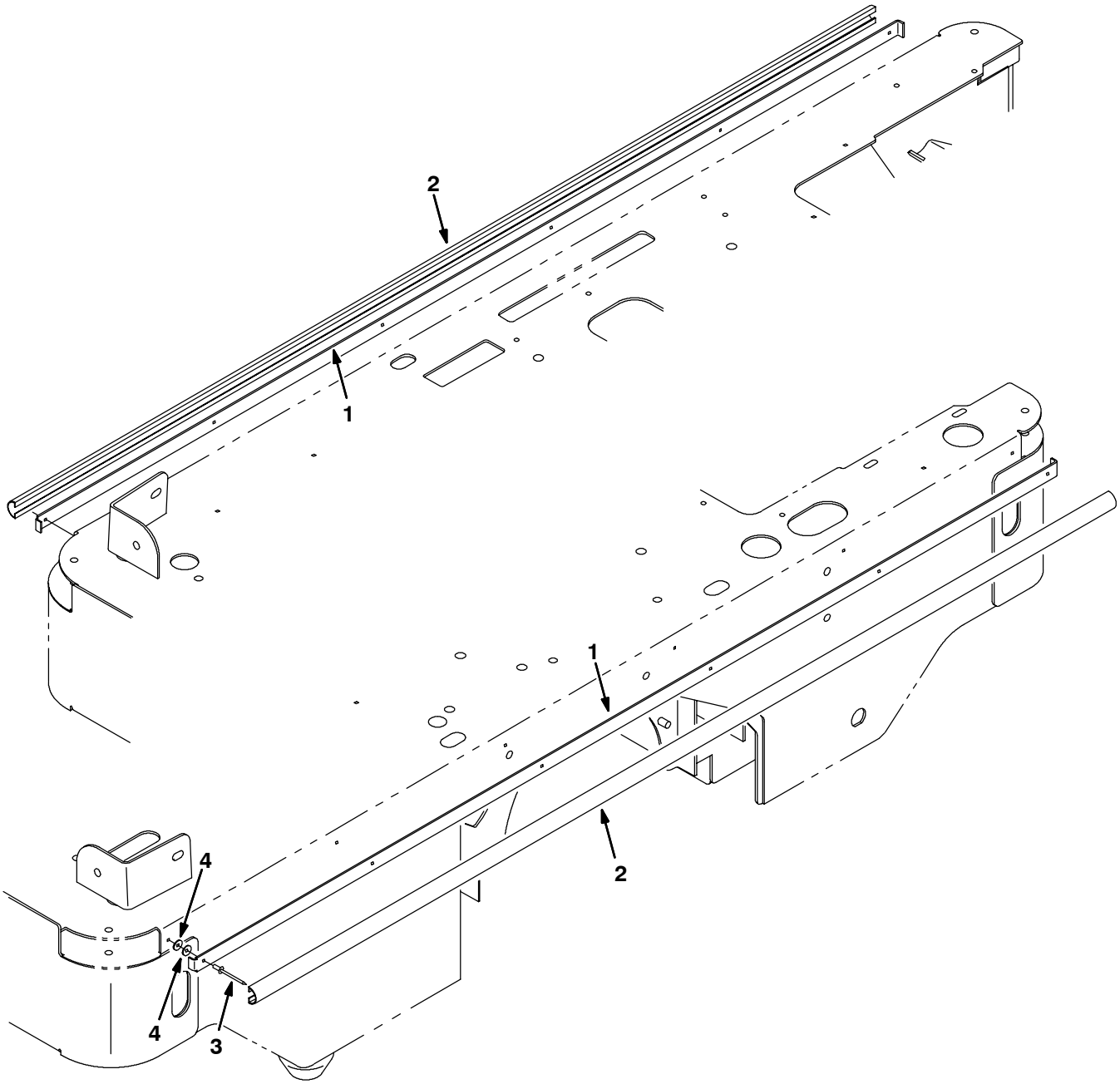

352196 - ALL

	Ref.	Tennant Part No.	Machine Serial Number	Description	Qty.
▽		83435	(000000-)	Molding Kit, Side	1
▲	1	83116	(000000-)	Strip, Retainer, Bumper	2
▲	2	81997	(000000-)	Strip, Bumper	2
▲	3	56799	(000000-)	Rivet, Pop	12
▲	4	02892	(000000-)	Washer	24

Fig. 10 - Worklight Kit

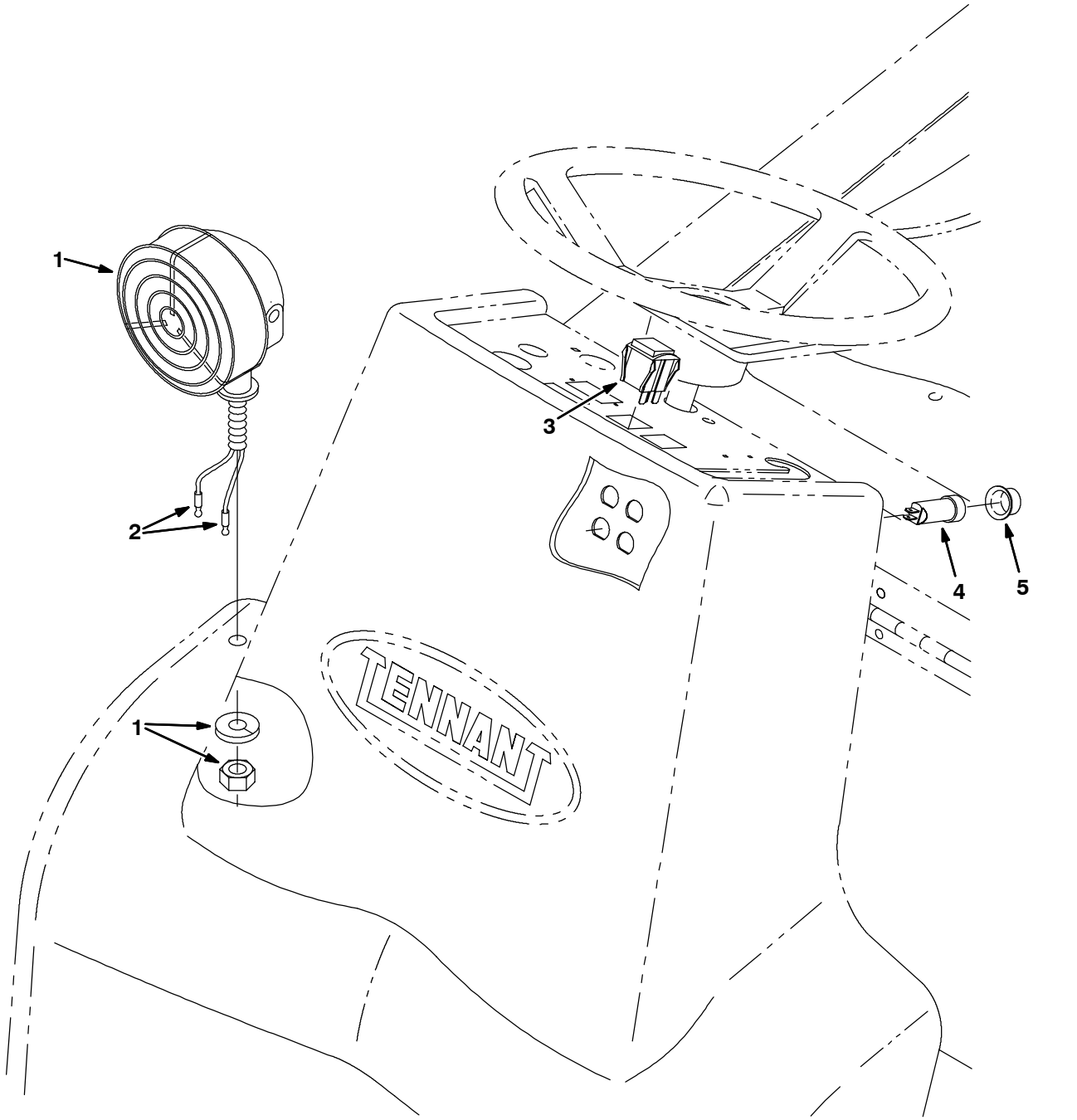

353515 - IC

	Ref.	Tennant Part No.	Machine Serial Number	Description	Qty.
▽		83201	(000000–)	Worklight Kit, 12V, 6100	1
▲	1	02374	(000000–)	Light Assy Head/Clr 12V	1
▲	2	55272	(000000–)	Plug	2
▲	3	360520	(000000–)	Switch, Rocker	1
▲	4	57803	(000000–)	Circuitbreaker, 15.0a, Resetable	1
▲	5	57751	(000000–)	Boot, Circuitbreaker	1

Fig. 11 - Non-Marking Tire Kit

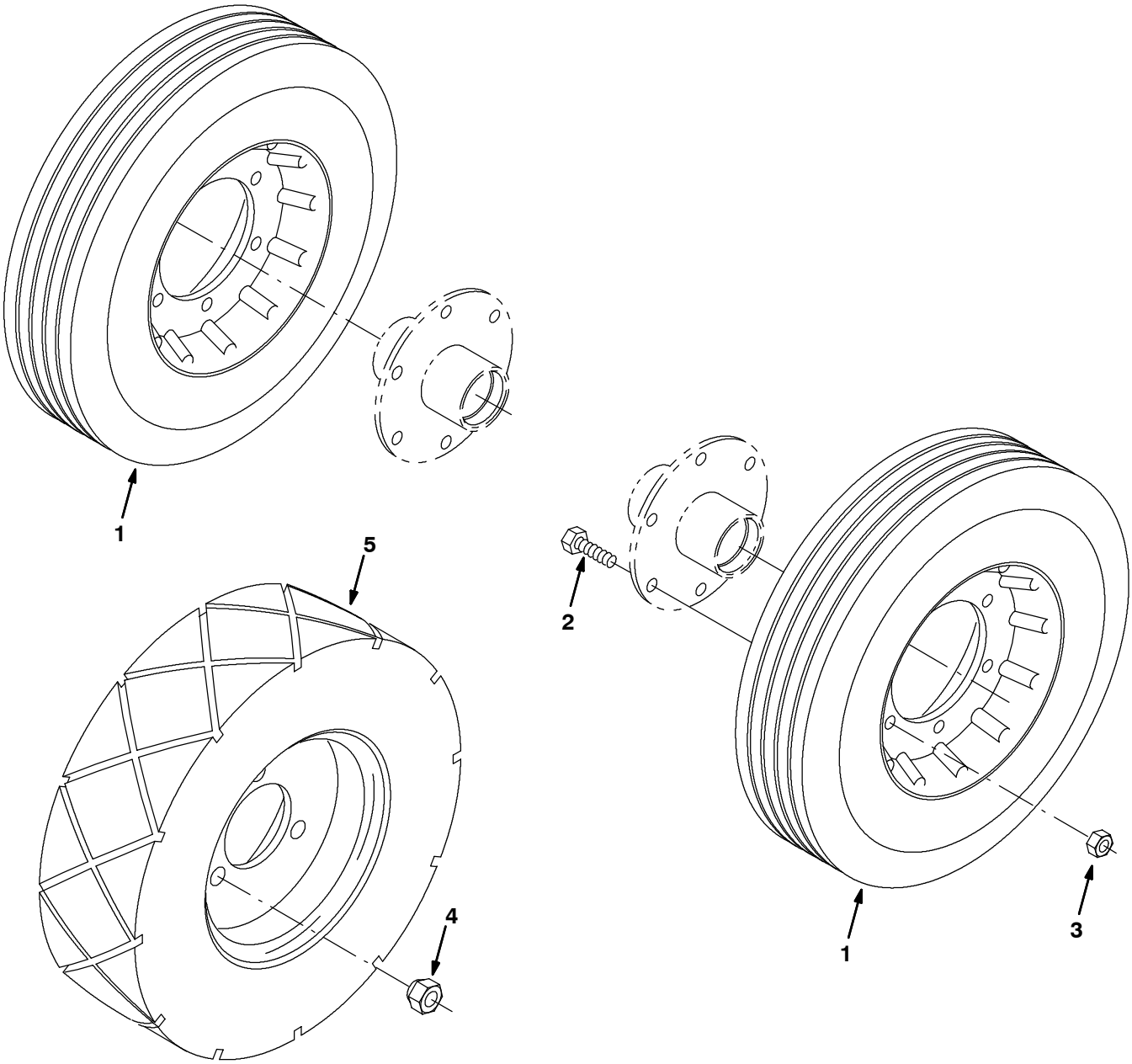

352212 - ALL

	Ref.	Tennant Part No.	Machine Serial Number	Description	Qty.
▽		83433	(000000-)	Kit, Tire, Non Marking	1
▲	1	83423	(000000-)	Wheel Assy, Rear, Solid Non Mk	2
▲	2	39277	(000000-)	Screw, Hex, M08-1.25 X 25, 8.8	6
▲	3	08709	(000000-)	Nut, Hex, Lock, M08-1.25,Nl	6
▲	4	11109	(000000-)	Nut, Wheel, .44-20 X 60 Angle	3
▲	5	369394	(000000-)	Tire, Solid, Non Mark 12X3	1

Fig. 12 - Fire Extinguisher Kit

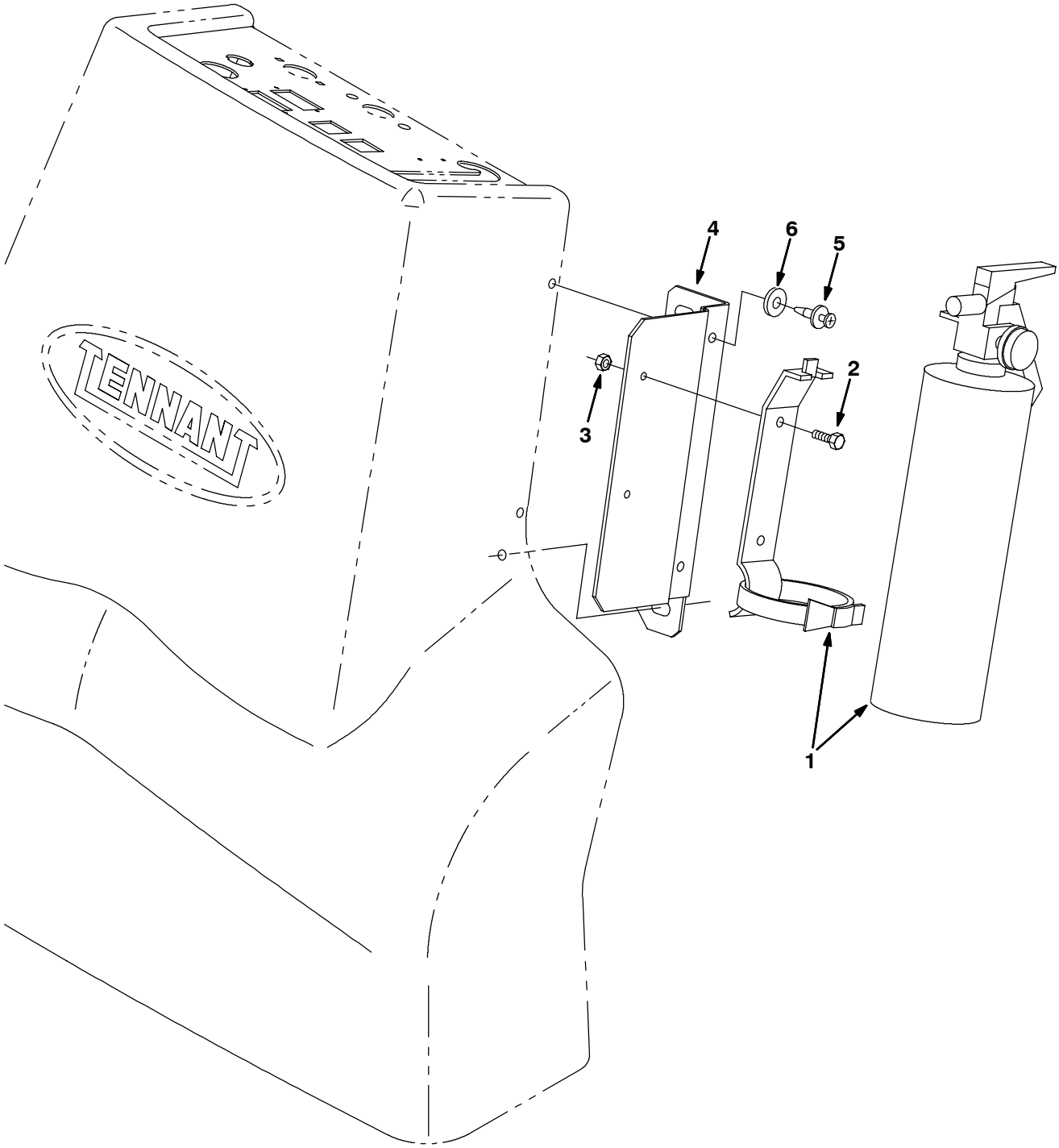

352214 - E, NA

	Ref.	Tennant Part No.	Machine Serial Number	Description	Qty.
▽		83221	(000000-)	Extinguisher Kit, 6100	1
▲	1	25312	(000000-)	Extinguisher, Fire	1
▲	2	12312	(000000-)	Screw, Hex, M05-0.8 X 12, 8.8	2
▲	3	06549	(000000-)	Nut, Hex, Lock, M05-0.8, Nl	2
▲	4	83395	(000000-)	Bracket, Mtg, Fire Extinguishe	1
▲	5	72970	(000000-)	Rivet, Plstc	2
▲	6	32491	(000000-)	Washer, Flat, .31 Hard	2

Fig. 13 - Documentation Group

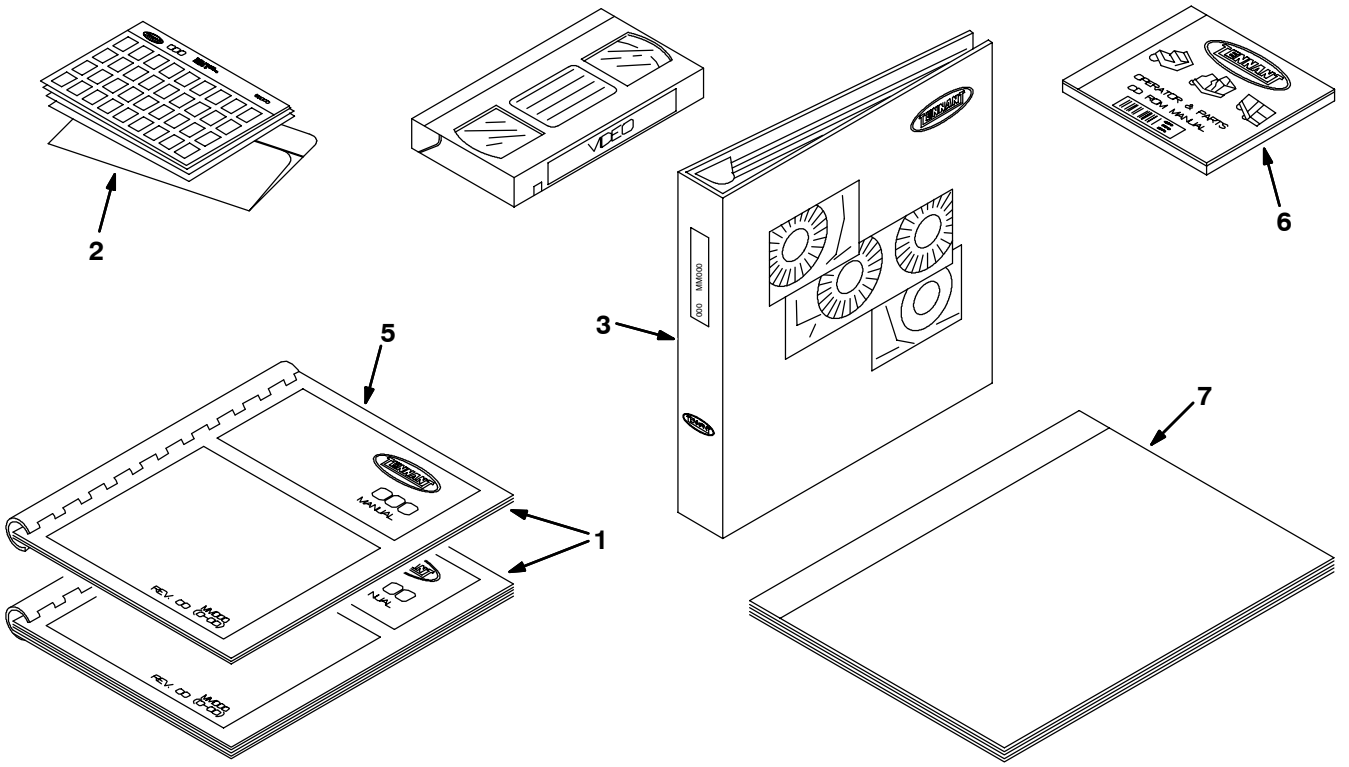

07501 - IC, NA

Ref.	Tennant Part No.	Machine Serial Number	Description	Qty.
1	330230	(000000-)	Manual Pkg, 6100 Gas	1
1	330234	(000000-)	Manual Pkg, 6100 Gas Jp	1
2	330231	(000000-)	Manual, Fiche, 6100 Gas	1
3	330235	(000000-)	Manual, Service, 6100 G/Lp	1
4	83121	(000000-)	Video, Operation 6100 G/Lp	1
5	330232	(000000-)	Manual, Oprtr, 6100 Gas Es Na	1
5	330233	(000000-)	Manual, Oprtr, 6100 Gas Fr Na	1
6	330710	(000000-)	Manual, Cd-Rom, Oprtr & Parts, All [NA]	1
7	371585	(000000-)	Manual, Eng Service, [Robin EH340]	1

SECTION 4

Contents **Page**

Fig. 1 – Hydraulic Motor Breakdown, 83448 4-2
Fig. 2 – Hydraulic Control Valve Breakdown, 383806 4-3
Fig. 3 – Hydraulic Pump Breakdown, 83449 4-4

Fig. 1 - Hydraulic Motor Breakdown, 83448

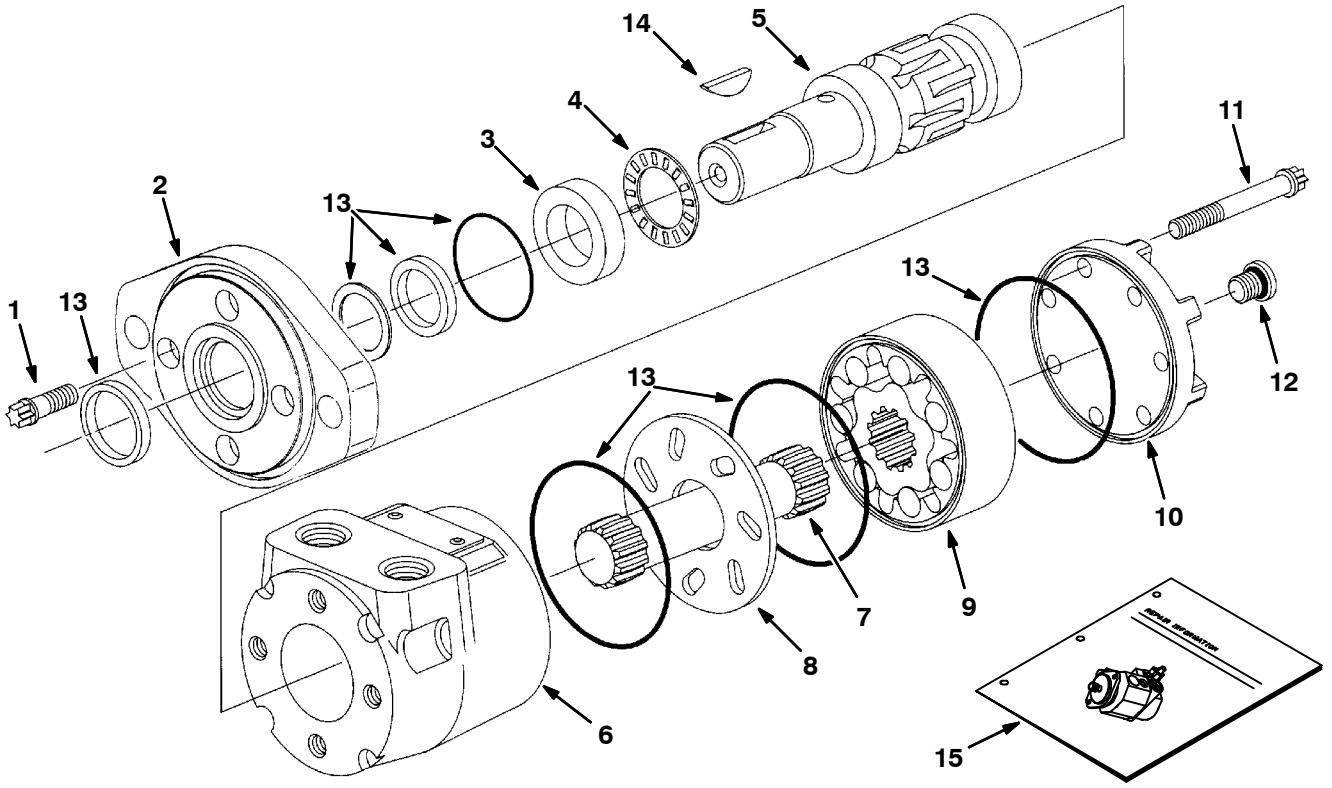

352666 - IC

	Ref.	Tennant Part No.	Manufacturer Serial Number	Description	Qty.
▽		83448	(000000-)	Motor, Hyd Gear	1
▲	1	37555	(000000-)	Screw	4
▲	2	763504	(000000-)	Flange, Mounting 2-Bolt	1
▲	3	16695	(000000-)	Race Thrust	1
▲	4	45628	(000000-)	Bearing, Thrust	1
▲	5	31357	(000000-)	Shaft, Output	1
▲	6	22655	(000000-)	Housing	1
▲	7	34176	(000000-)	Drive	1
▲	8	22658	(000000-)	Spacer Plate	1
▲	9	22659	(000000-)	Geroler S/A	1
▲	10	22660	(000000-)	End Cap	1
▲	11	74174	(000000-)	Cap, Screw	7
▲	12	74098	(000000-)	Plug	1
▲	13	22662	(000000-)	Seal Kit, Motor	1
▲	14	00500-15	(000000-)	Key, Woodruff	1
▲	15	22661	(000000-)	Repair Info,Mtr	1

Fig. 2 - Hydraulic Control Valve Breakdown, 383806

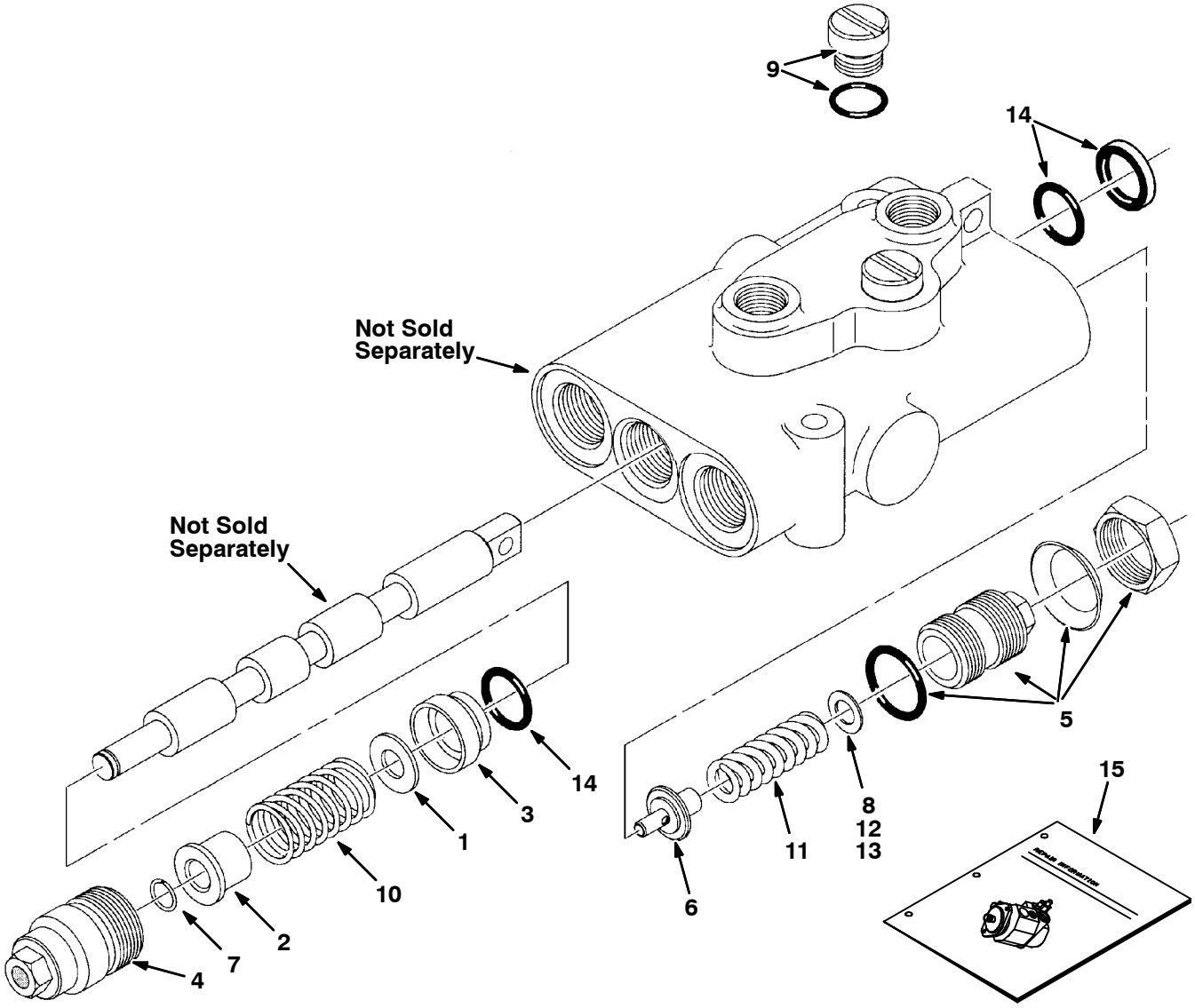

352662 - IC, 6100

	Ref.	Tennant Part No.	Manufacturer Serial Number	Description	Qty.
▽		383806	(000000–)	Valve, Hyd Cntrl Man	1
▲	1	79794	(000000–)	Washer	1
▲	2	79785	(000000–)	Spacer	1
▲	3	79788	(000000–)	Bushing	1
▲	4	79789	(000000–)	Cap	1
▲	5	79790	(000000–)	Plug Assembly	1
▲	6	22656	(000000–)	Poppet	1
▲	7	79792	(000000–)	Retainer, Ring	1
▲	8	79793	(000000–)	Shim .035 Thk	–
▲	9	79795	(000000–)	Plug & O–Ring	1
▲	10	79796	(000000–)	Spring	1
▲	11	79797	(000000–)	Spring	1
▲	12	79798	(000000–)	Shim .015 Thk	–
▲	13	79799	(000000–)	Shim .010 Thk	–
▲	14	79812	(000000–)	Seal Kit, Vlv	1
▲	15	79820	(000000–)	Instruction, Repair, Valve	1

Fig. 3 - Hydraulic Pump Breakdown, 83449

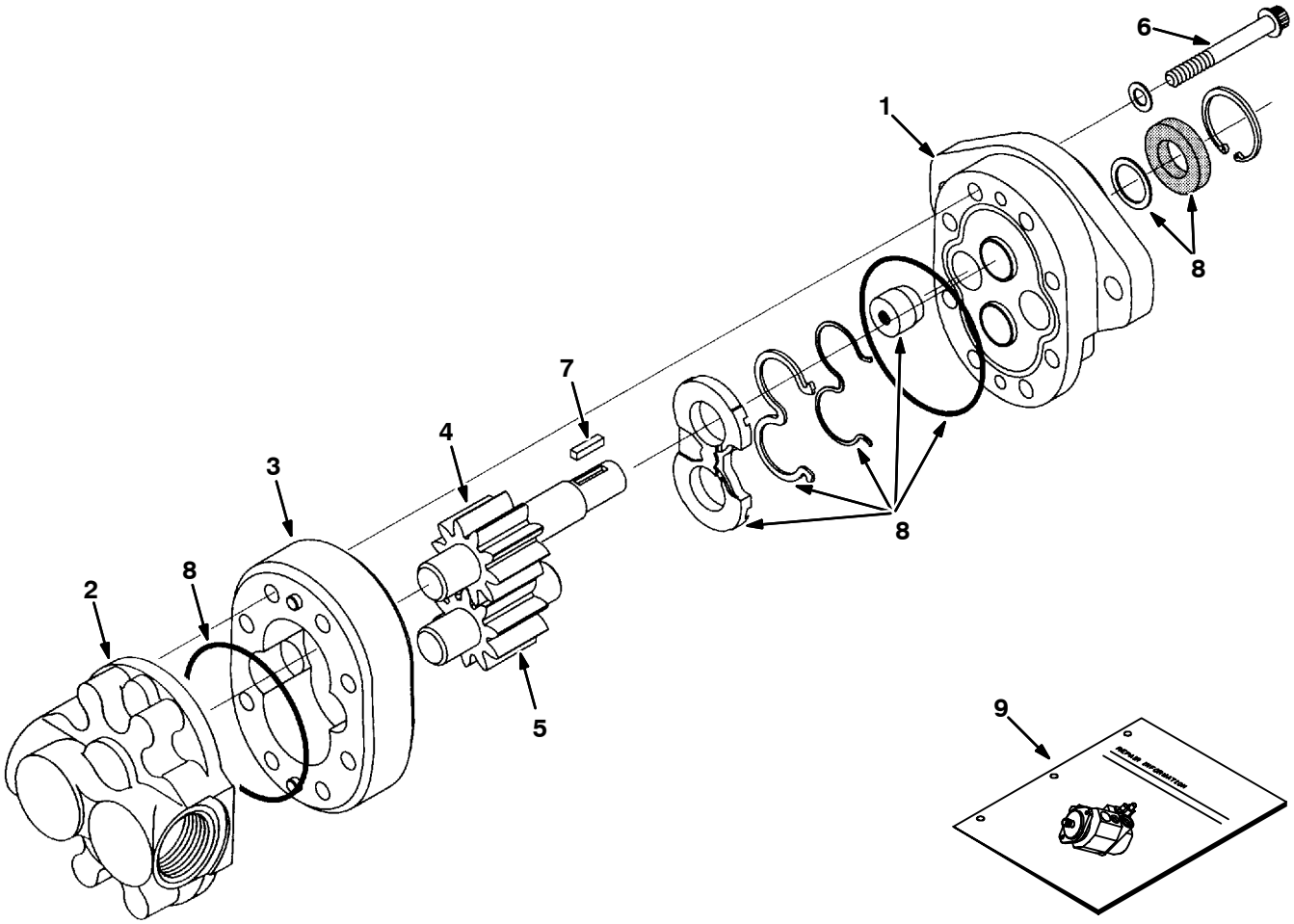

352664 - IC

	Ref.	Tennant Part No.	Manufacturer Serial Number	Description	Qty.
▽		83449	(000000-)	Pump, Hyd Gear	1
▲	1	373201	(000000-)	Frontplate Assy	1
▲	2	373202	(000000-)	Backplate Assy	1
▲	3	373256	(000000-)	Body S/A	1
▲	4	373323	(000000-)	Drive Gear S/A	1
▲	5	373258	(000000-)	Idler Gear S/A	1
▲	6	373301	(000000-)	Screw, Cap	8
▲	7	373302	(000000-)	Key	1
▲	8	373208	(000000-)	Seal Kit, Pump	1
▲	9	373207	(000000-)	Repair Info,Pmp	1

SECTION 5

Contents **Page**

Fig. 1 – Crankcase Group, Gasoline 5-2
Fig. 2 – Crankcase Group, LPG 5-4
Fig. 3 – Crankshaft and Piston Group 5-6
Fig. 4 – Intake and Exhaust Group 5-8
Fig. 5 – Air Cleaner Group, Gasoline 5-10
Fig. 6 – Air Cleaner Group, LPG 5-11
Fig. 7 – Housing Group 5-12
Fig. 8 – Governor and Carburetor Group 5-14
Fig. 9 – Fuel Tank Group, Gasoline 5-16
Fig. 10 – Ignition Group, Gasoline 5-18
Fig. 11 – Ignition Group, LPG 5-20
Fig. 12 – Flywheel Group, LPG 5-22
Fig. 13 – Starter Breakdown, 385966 5-24
Fig. 14 – Regulator and Solenoid Group 5-26

Fig. 1 - Crankcase Group, Gasoline

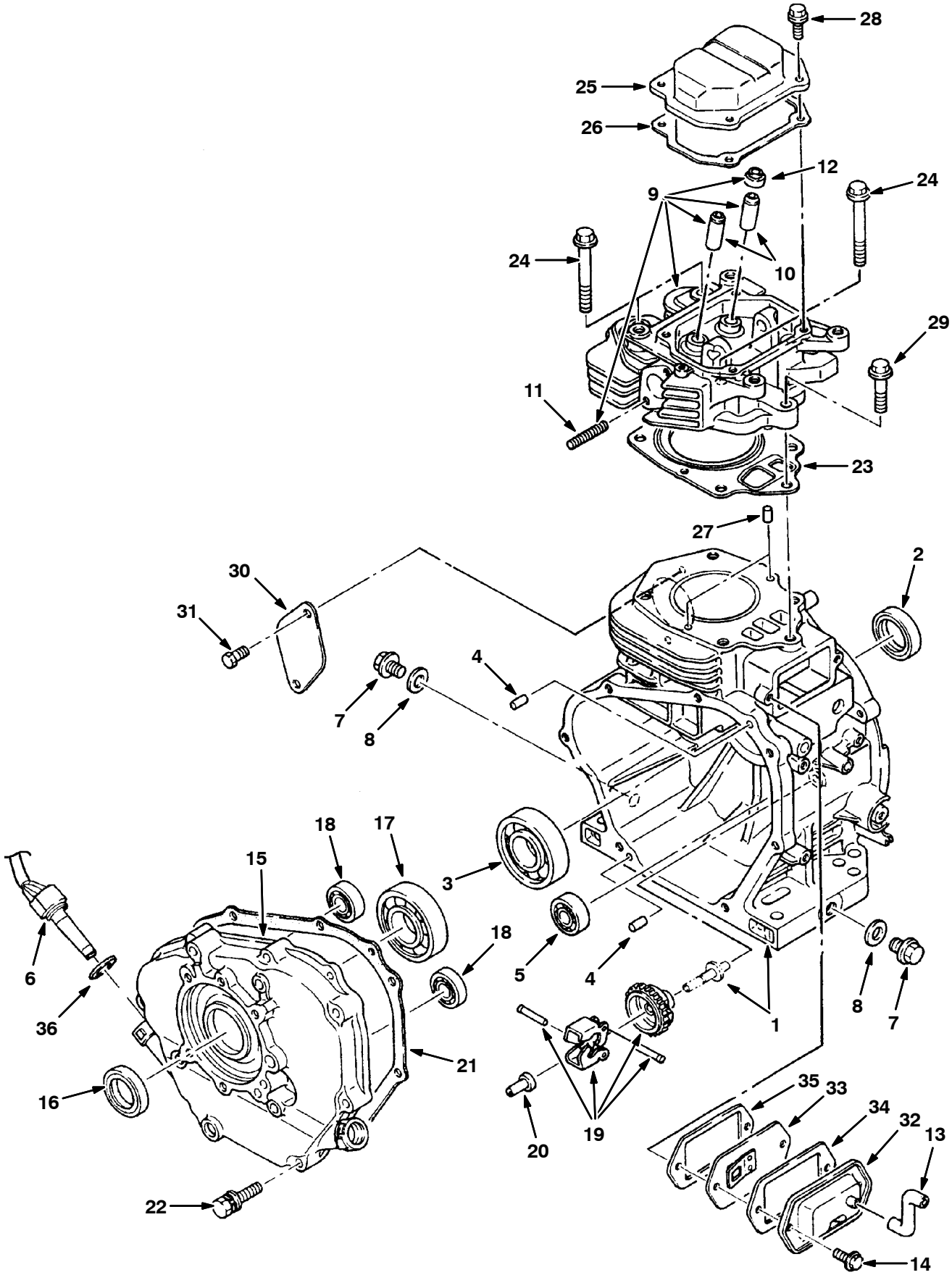

352668 - G

Fig. 1 - Crankcase Group, Gasoline

	Ref.	Tennant Part No.	Robin Part Number	Description	Qty.
▽	1	370946	247-10101-31	Crankcase (Gas)	1
▲	2	370932	044-03500-90	Oil Seal	1
▲	3	370934	060-03500-10	Ball Bearing	1
▲	4	369507	031-00600-20	Dowel Pin	2
▲	5	370933	060-01500-10	Ball Bearing	1
	6	385958	227-76015-01	Sensor,Lev,Oil (Gas)	1
	7	369508	040-11400-30	Plug	2
	8	369505	021-11400-20	Gasket	2
▽	9	370947	247-13011-11	Cylinder Head (Gas)	1
▲	10	370939	246-14202-03	Valve Guide (Gas)	2
▲	11	370928	010-50804-30	Stud	2
▲	12	370937	239-16302-13	Oil Seal	1
	13	370949	246-10801-03	Rubber Pipe	1
	14	369582	011-00600-30	Flange Bolt	2
▽	15	370938	246-11002-21	Main Bearing Cover	1
▲	16	370932	044-03500-90	Oil Seal	1
▲	17	370934	060-03500-10	Ball Bearing	1
▲	18	370933	060-01500-10	Ball Bearing	2
	19	370945	246-45001-01	Governor Gear	1
	20	369513	205-41901-03	Governor Sleeve	1
	21	370942	246-15101-03	Gasket (Brg Cover)	1
	22	370925	001-13084-00	Bolt & Washer Assy	7
	23	370948	247-15001-13	Gasket (Head)	1
	24	370930	011-01000-40	Flange Bolt	4
	25	370943	246-15501-02	Rocker Cover	1
	26	370944	246-16002-03	Gasket (Rocker Cover)	1
	27	369507	031-00600-20	Dowel Pin	2
	28	369502	011-00600-20	Flange Bolt	4
	29	370929	011-01000-20	Flange Bolt	1
	30	370935	224-17101-03	Blind Cover	1
	31	370926	001-65081-20	Bolt	2
	32	370940	246-14301-01	Breather Cover	1
	33	370941	246-14401-01	Breather Plate	1
	34	370950	246-16006-03	Gasket (Breathercover)	1
	35	370951	246-16007-03	Gasket (Breatherplate)	1
	36	370931	021-11400-20	Gasket	1
		370952	247-99001-07	Gasket Set	1

Fig. 2 - Crankcase Group, LPG

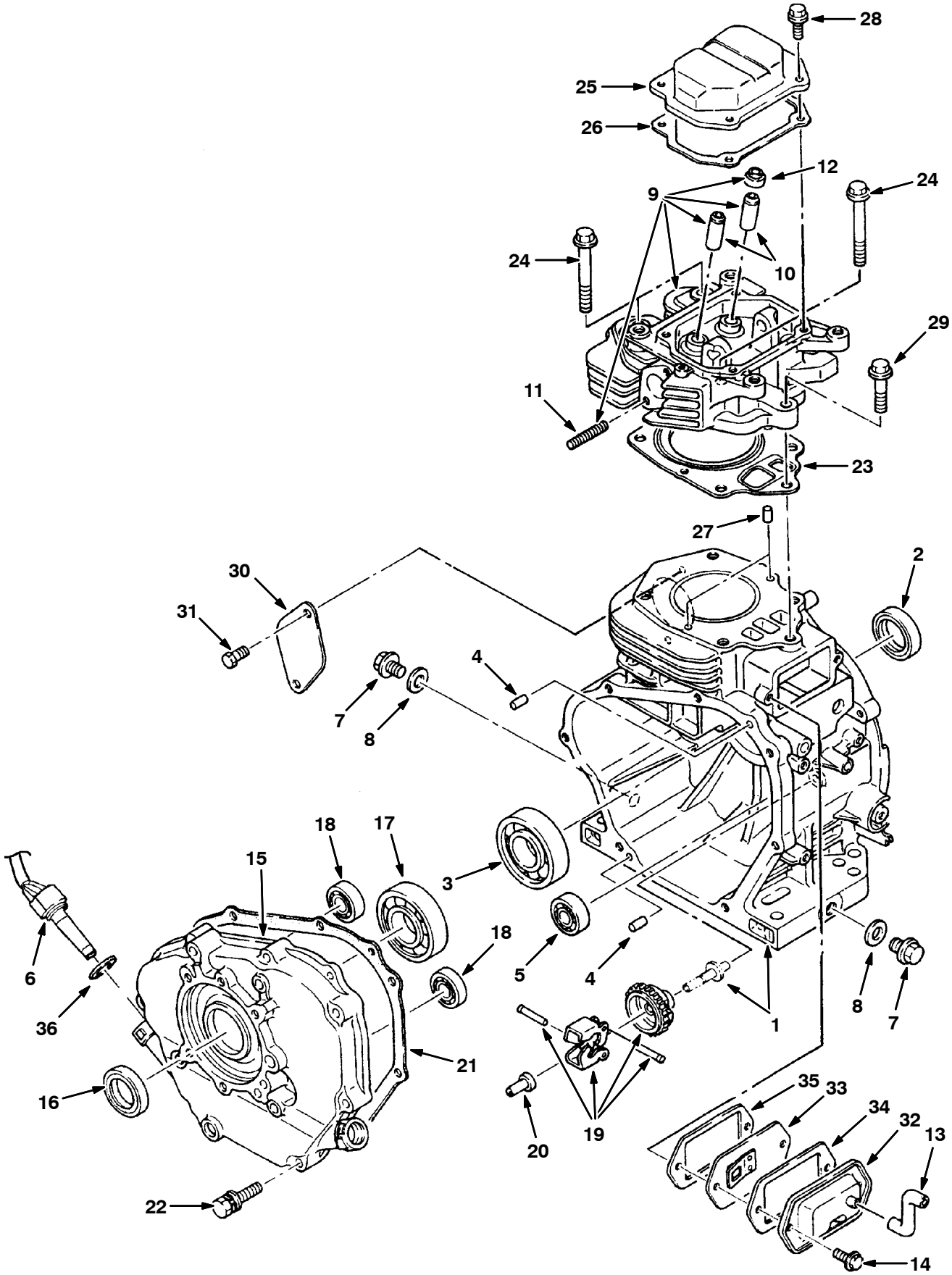

352668 - LP

Fig. 2 - Crankcase Group, LPG

	Ref.	Tennant Part No.	Robin Part Number	Description	Qty.
▽	1	385967	247-10110-01	Crankcase (Lpg)	1
▲	2	370932	044-03500-90	Oil Seal	1
▲	3	370934	060-03500-10	Ball Bearing	1
▲	4	369507	031-00600-20	Dowel Pin	2
▲	5	370933	060-01500-10	Ball Bearing	1
	6	370813	KS3-11041-01	Sensor,Lev,Oil (Lpg)	1
	7	369508	040-11400-30	Plug	2
	8	369505	021-11400-20	Gasket	2
▽	9	385968	247-13011-01	Cylinder Head (Lpg)	1
▲	10	385969	246-14211-03	Valve Guide (Lpg)	2
▲	11	370928	010-50804-30	Stud	2
▲	12	370937	239-16302-13	Oil Seal	1
	13	370949	246-10801-03	Rubber Pipe	1
	14	369582	011-00600-30	Flange Bolt	2
▽	15	370938	246-11002-21	Main Bearing Cover	1
▲	16	370932	044-03500-90	Oil Seal	1
▲	17	370934	060-03500-10	Ball Bearing	1
▲	18	370933	060-01500-10	Ball Bearing	2
	19	370945	246-45001-01	Governor Gear	1
	20	369513	205-41901-03	Governor Sleeve	1
	21	370942	246-15101-03	Gasket (Brg Cover)	1
	22	370925	001-13084-00	Bolt & Washer Assy	7
	23	370948	247-15001-13	Gasket (Head)	1
	24	370930	011-01000-40	Flange Bolt	4
	25	370943	246-15501-02	Rocker Cover	1
	26	370944	246-16002-03	Gasket (Rocker Cover)	1
	27	369507	031-00600-20	Dowel Pin	2
	28	369502	011-00600-20	Flange Bolt	4
	29	370929	011-01000-20	Flange Bolt	1
	30	370935	224-17101-03	Blind Cover	1
	31	370926	001-65081-20	Bolt	2
	32	370940	246-14301-01	Breather Cover	1
	33	370941	246-14401-01	Breather Plate	1
	34	370950	246-16006-03	Gasket (Breathercover)	1
	35	370951	246-16007-03	Gasket (Breatherplate)	1
	36	370931	021-11400-20	Gasket	1
		370952	247-99001-07	Gasket Set	1

Fig. 3 - Crankshaft and Piston Group

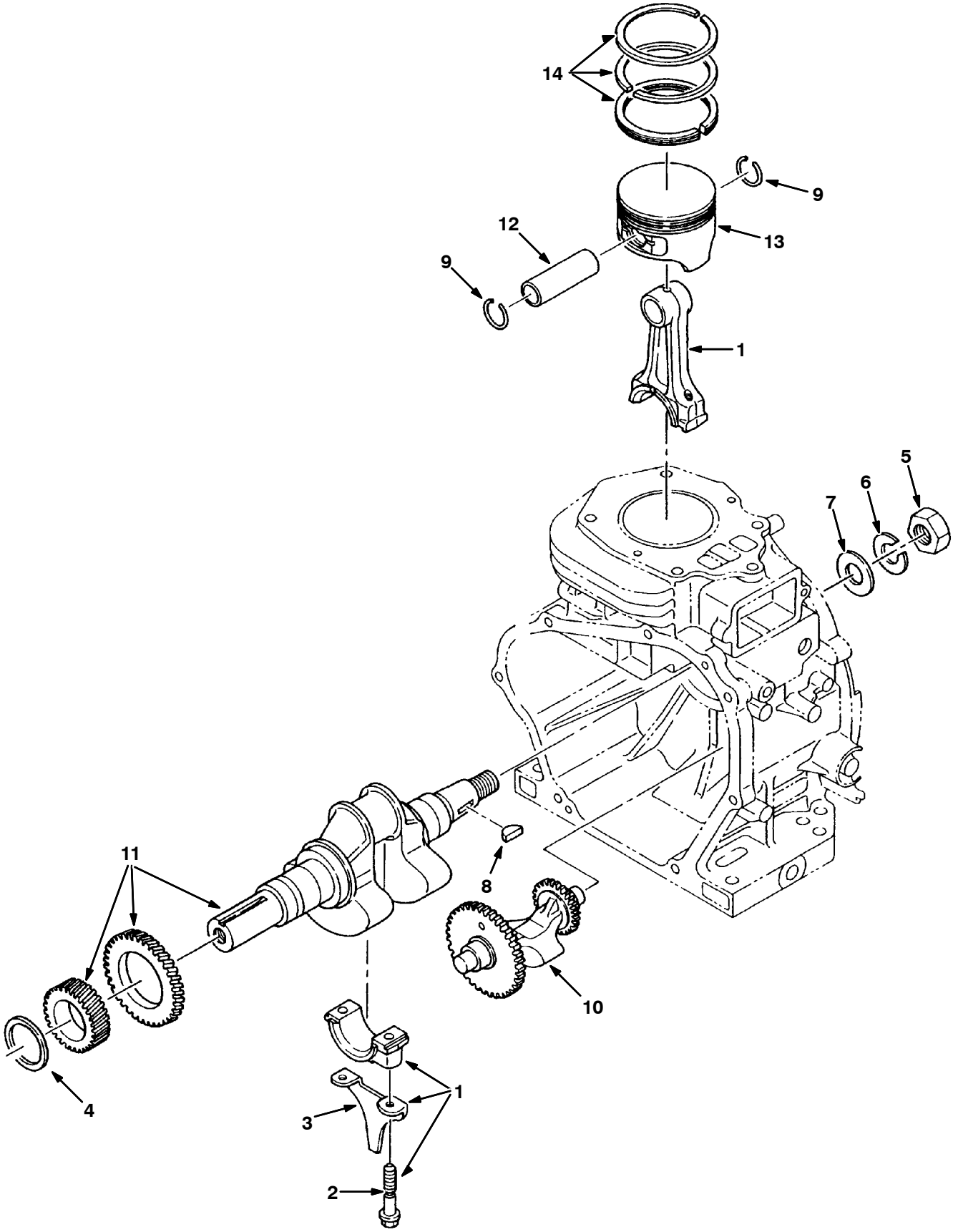

352670 - G, LP

Fig. 3 - Crankshaft and Piston Group

	Ref.	Tennant Part No.	Robin Part Number	Description	Qty.
▽	1	370962	246-22501-00	Connecting Rod Assy	1
▲	2	370963	246-23001-03	Connecting Rod Bolt	2
▲	3	370964	246-23101-13	Oil Scraper	1
	4	370957	023-03501-60	Spacer, 0.6	1
	4	370958	023-03501-70	Spacer, 0.8	1
	4	370959	023-03501-80	Spacer, 1.0	1
	5	370953	002-18180-00	Nut	1
	6	370955	003-20180-00	Spring Washer	1
	7	370954	003-10180-00	Washer	1
	8	370956	005-32054-01	Woodruff Key	1
	9	370960	056-52100-20	Clip	2
	10	370967	246-24102-13	Balancer Shaft 2	1
	11	370961	246-20901-01	Crankshaft	1
	12	370965	246-23301-03	Piston Pin	1
	13	370968	247-23401-03	Piston, Std	1
	13	370969	247-23402-03	Piston, +.25mm	1
	13	370970	247-23403-03	Piston, +.50mm	1
	14	370971	247-23501-07	Piston Ring Set, Std	1
	14	370972	247-23502-07	Piston Ring Set, +.25mm	1
	14	370973	247-23503-07	Piston Ring Set, +.50mm	1

Fig. 4 - Intake and Exhaust Group

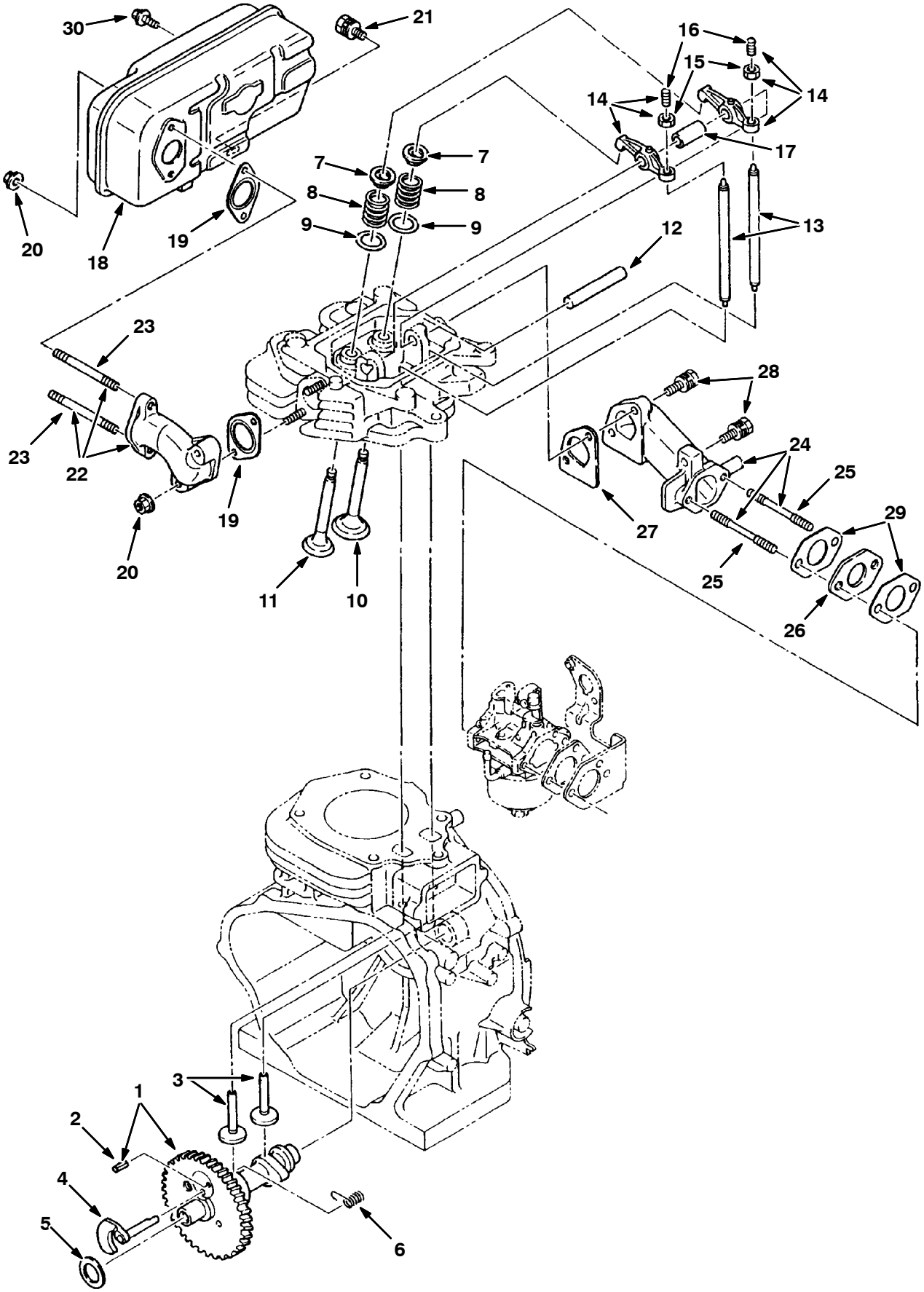

352672 - G, LP

Fig. 4 - Intake and Exhaust Group

	Ref.	Tennant Part No.	Robin Part Number	Description	Qty.
▽	1	370985	246-31701-01	Camshaft	1
▲	2	369542	005-19041-00	Spring Pin	1
	3	370987	246-33301-03	Tappet	2
	4	370997	246-36201-01	Release Lever	1
	5	370980	023-02200-50	Spacer	1
	5	370981	023-02200-60	Spacer	1
	5	370982	023-02200-70	Spacer	1
	6	370998	246-36701-03	Return Spring	1
	7	370990	246-33601-03	Valve Spring	2
	8	370991	246-33701-13	Spring Retainer	2
	9	370979	020-02000-10	Washer	2
	10	370988	246-33401-03	Intake Valve	1
	11	370989	246-33501-03	Exhaust Valve	1
	12	370983	239-35001-06	Rocker Shaft	1
	13	370994	246-35301-11	Push Rod	2
▽	14	370995	246-36101-10	Rocker Arm Assy	2
▲	15	370977	014-90800-20	Adjusting Screw	2
▲	16	369548	017-00800-90	Nut	2
	17	370996	246-36120-13	Spacer (Rocker Shaft)	1
	18	370984	246-30102-11	Muffler	1
	19	370993	246-35201-03	Gasket (Muffler)	2
	20	370978	018-00800-10	Flange Nut	4
	21	370974	001-10081-60	Bolt & Washer Assy	1
▽	22	370992	246-34001-01	Exhaust Pipe	1
▲	23	370975	010-50803-60	Stud	2
▽	24	370986	246-33001-01	Intake Pipe	1
▲	25	369544	010-50602-30	Stud	2
	26	373154	246-32901-03	Insulator	1
	27	373155	246-36001-13	Gasket	1
	28	370999	001-13082-80	Bolt & Washer	3
	29	373153	234-35902-03	Gasket Set	2
	30	370976	011-00600-10	Bolt, Flange	2

Fig. 5 - Air Cleaner Group, Gasoline

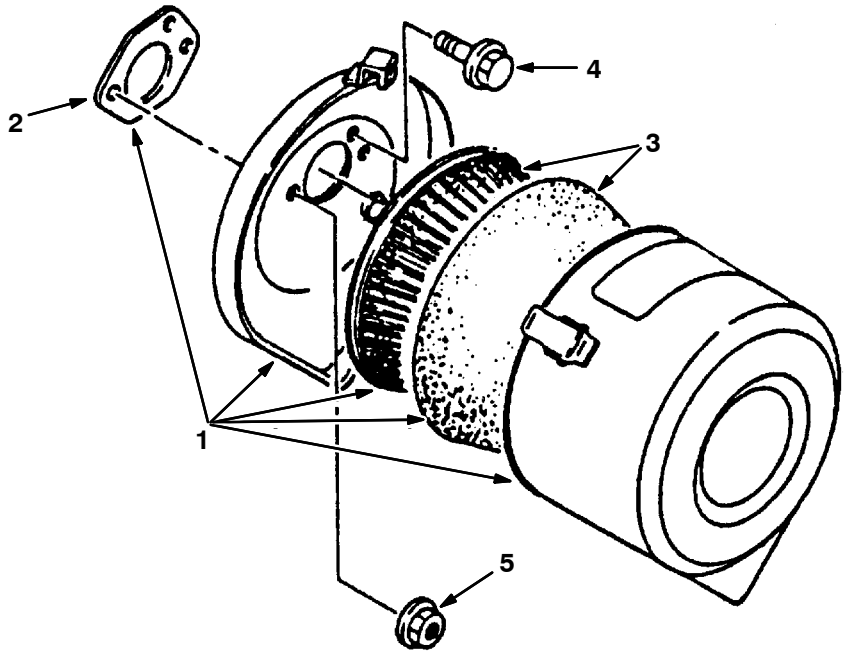

352674 - G

	Ref.	Tennant Part No.	Robin Part Number	Description	Qty.
▽	1	385959	246-32608-00	Air Cleaner Assy (Gas)	1
▲	2	385960	234-36003-08	Gasket	1
▲	3	373171	234-32604-07	Element Set	1
	4	385961	001-10061-20	Bolt & Washer (Gas)	1
	5	369540	002-38060-00	Flange Nut	2

Fig. 6 - Air Cleaner Group, LPG

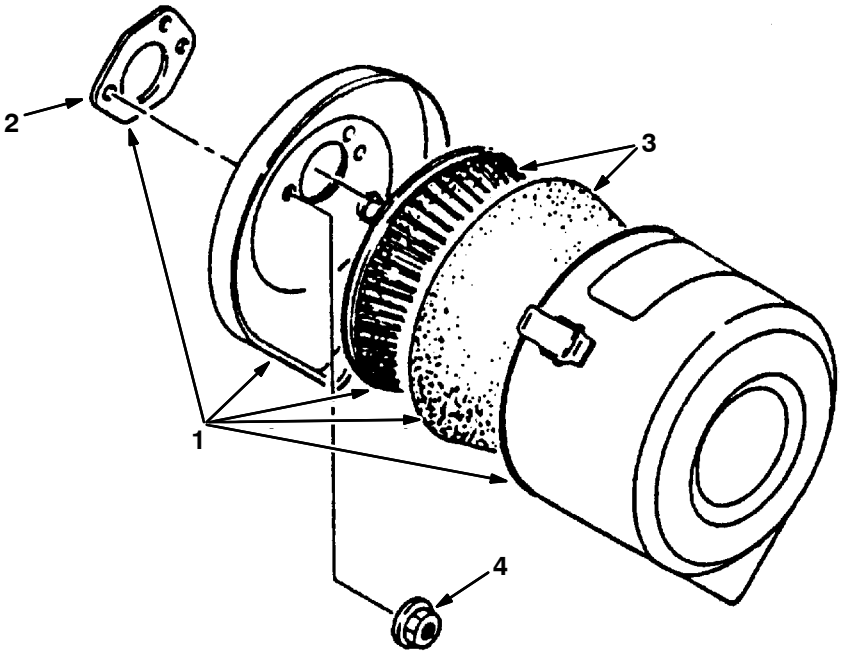

352692 - LP

	Ref.	Tennant Part No.	Robin Part Number	Description	Qty.
▽	1	385965	246-32612-00	Air Cleaner Assy (Lpg)	1
▲	2	385960	234-36003-08	Gasket	1
▲	3	373171	234-32604-07	Element Set	1
	4	369540	002-38060-00	Flange Nut	2

Fig. 7 - Housing Group

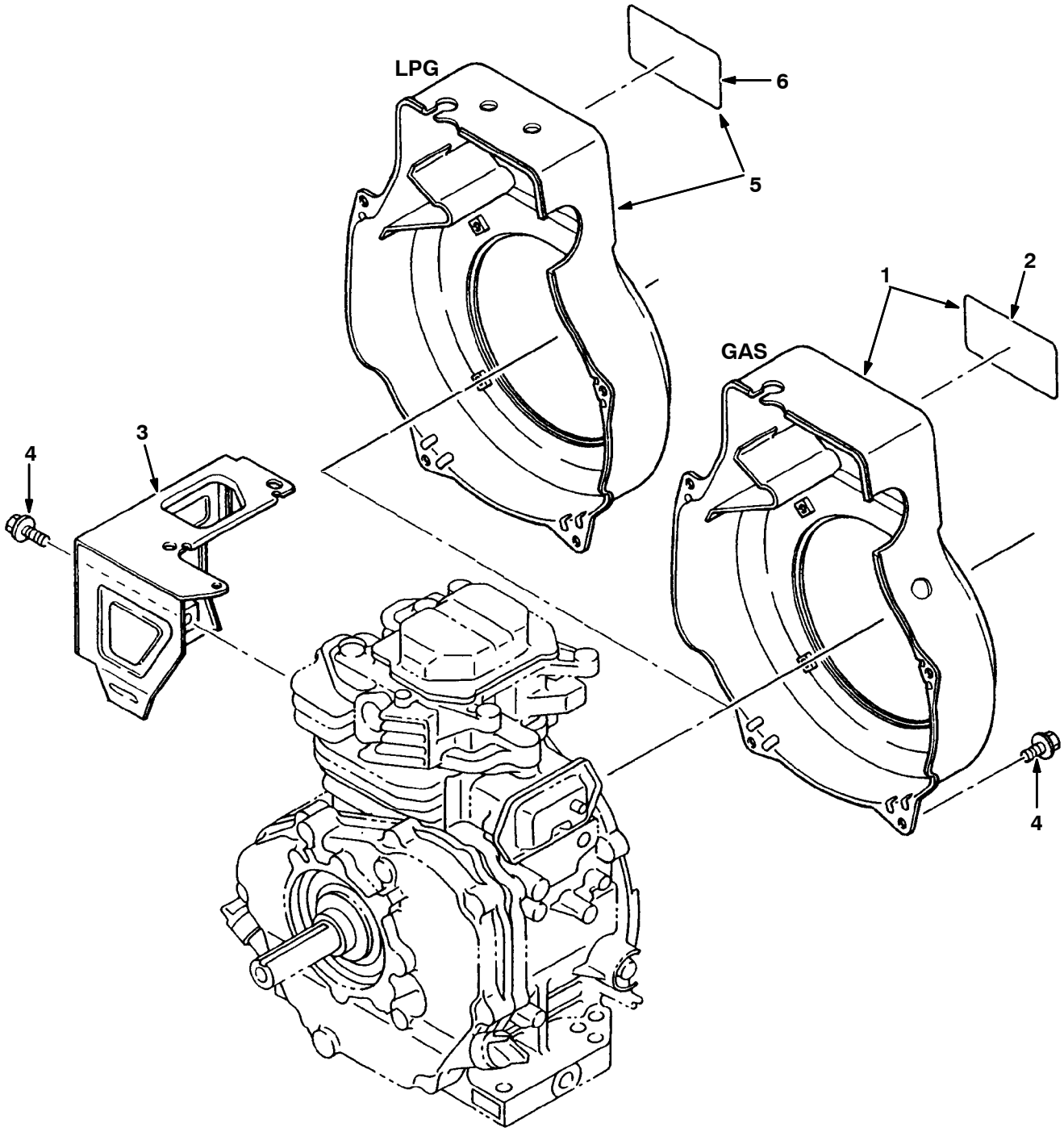

352678 - G, LP

Fig. 7 - Housing Group

	Ref.	Tennant Part No.	Robin Part Number	Description	Qty.
▽	1	373173	246-51224-01	Blower Housing (Gas)	1
▲	2	373174	247-91703-03	Label	1
	3	373172	246-52701-12	Cylinder Baffle	1
	4	370976	011-00600-10	Flange Bolt	5
▽	5	373196	246-51225-01	Housing,Blower (Lpg)	1
▲	6	373174	247-91703-03	Label	1

Fig. 8 - Governor and Carburetor Group

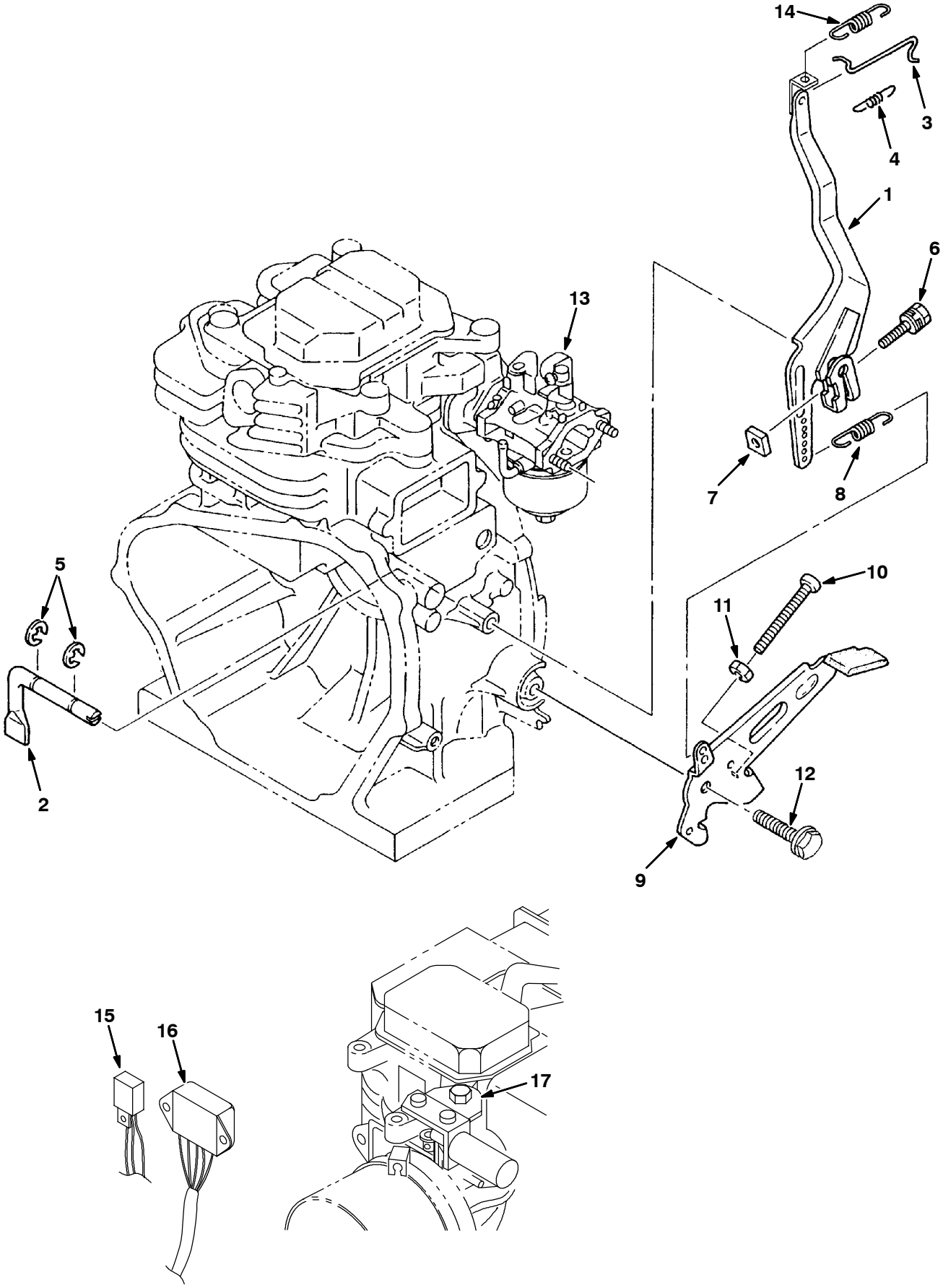

352676, 352697 - G, LP

Fig. 8 - Governor and Carburetor Group

Ref.	Tennant Part No.	Robin Part Number	Description	Qty.
1	373167	246-42304-01	Governor Lever	1
2	373166	246-42201-03	Governor Shaft	1
3	373163	234-42703-01	Governor Rod	1
4	373169	246-42801-13	Rod Spring	1
5	369572	003-13060-00	Clip	2
6	369596	001-14062-50	Bolt & Washer Assy	1
7	373160	018-60600-20	Nut	1
8	373168	246-42503-13	Governor Spring	1
9	373170	246-43301-13	Speed Control	1
10	373158	004-31054-00	Screw, Panhead	1
11	373157	002-27050-00	Nut	1
12	370974	001-10081-60	Bolt And Washer Assy	1
13	373188	247-62314-10	Carburetor Assy (Gas)	1
13	373197	247-69901-00	Carburetor (Lpg)	1
14	370894	234-78202-13	Spring	1
15	385954	KU3-11059-01	Diode Unit	1
16	385952	KU3-11008-01	Control Unit	1
17	385950	246-76005-01	Bracket, Mount	1

Fig. 9 - Fuel Tank Group, Gasoline

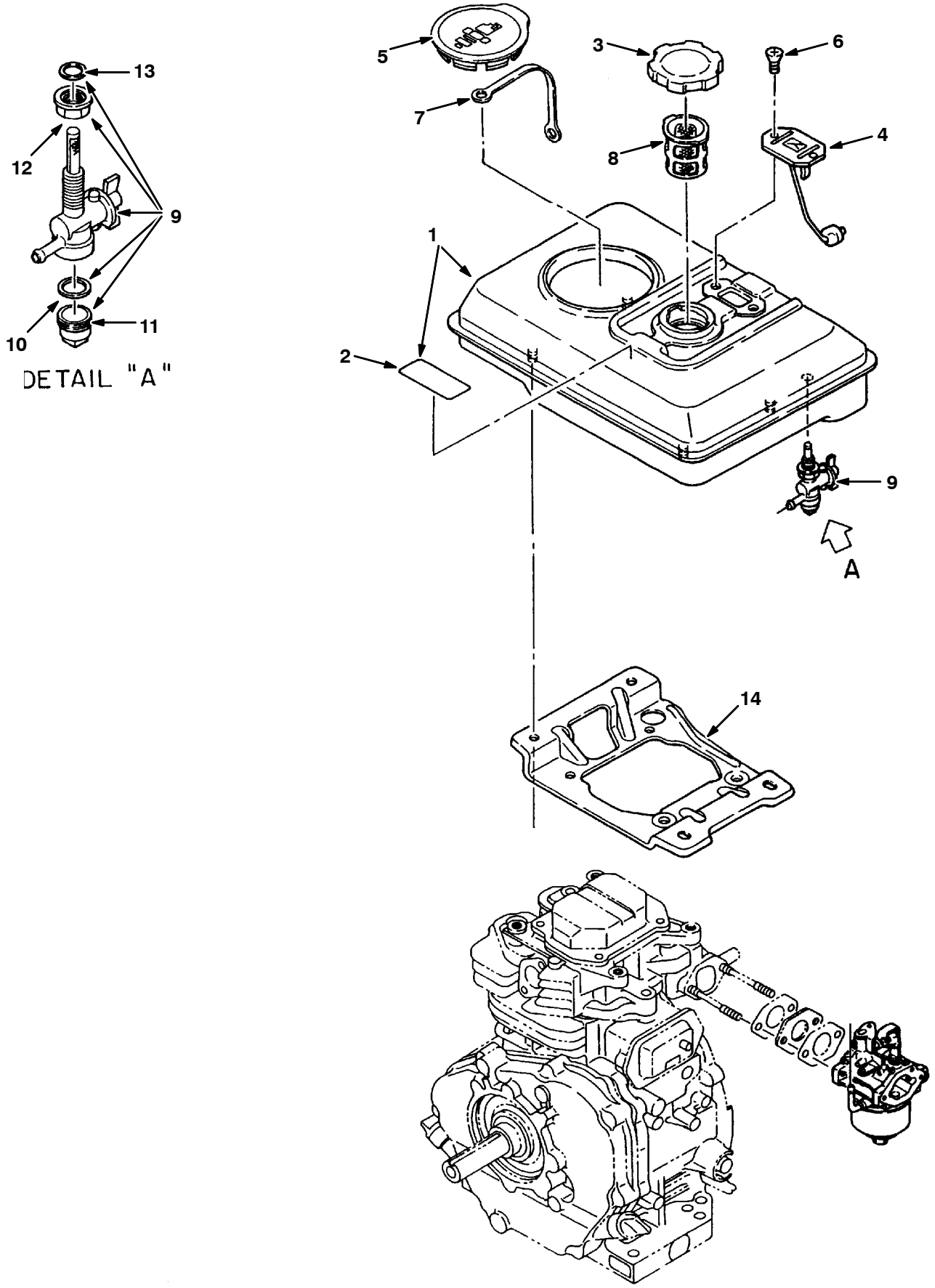

352680 - 6100, G

Fig. 9 - Fuel Tank Group, Gasoline

	Ref.	Tennant Part No.	Robin Part Number	Description	Qty.
▽	1	373184	246-60803-01	Fuel Tank	1
▲	2	369587	073-20039-00	Label (Warning)	1
	3	80076	043-04300-15	Fuel Tank Cap	1
	4	373180	064-80001-00	Fuel Gauge	1
	5	373186	246-66001-03	Plug Cover	1
	6	369583	014-50500-40	Screw	2
	7	373187	246-66002-03	Gasket	1
	8	369585	064-13600-10	Fuel Filter	1
▽	9	373185	246-62101-20	Fuel Strainer Assy	1
▲	10	373177	064-20064-10	Gasket	1
▲	11	373176	064-20042-10	Cup, Strainer	1
▲	12	373178	064-20064-30	Nut	1
▲	13	373179	064-20064-40	Gasket	1
	14	373190	246-61601-21	Fuel Tank Bracket	1

Fig. 10 - Ignition Group, Gasoline

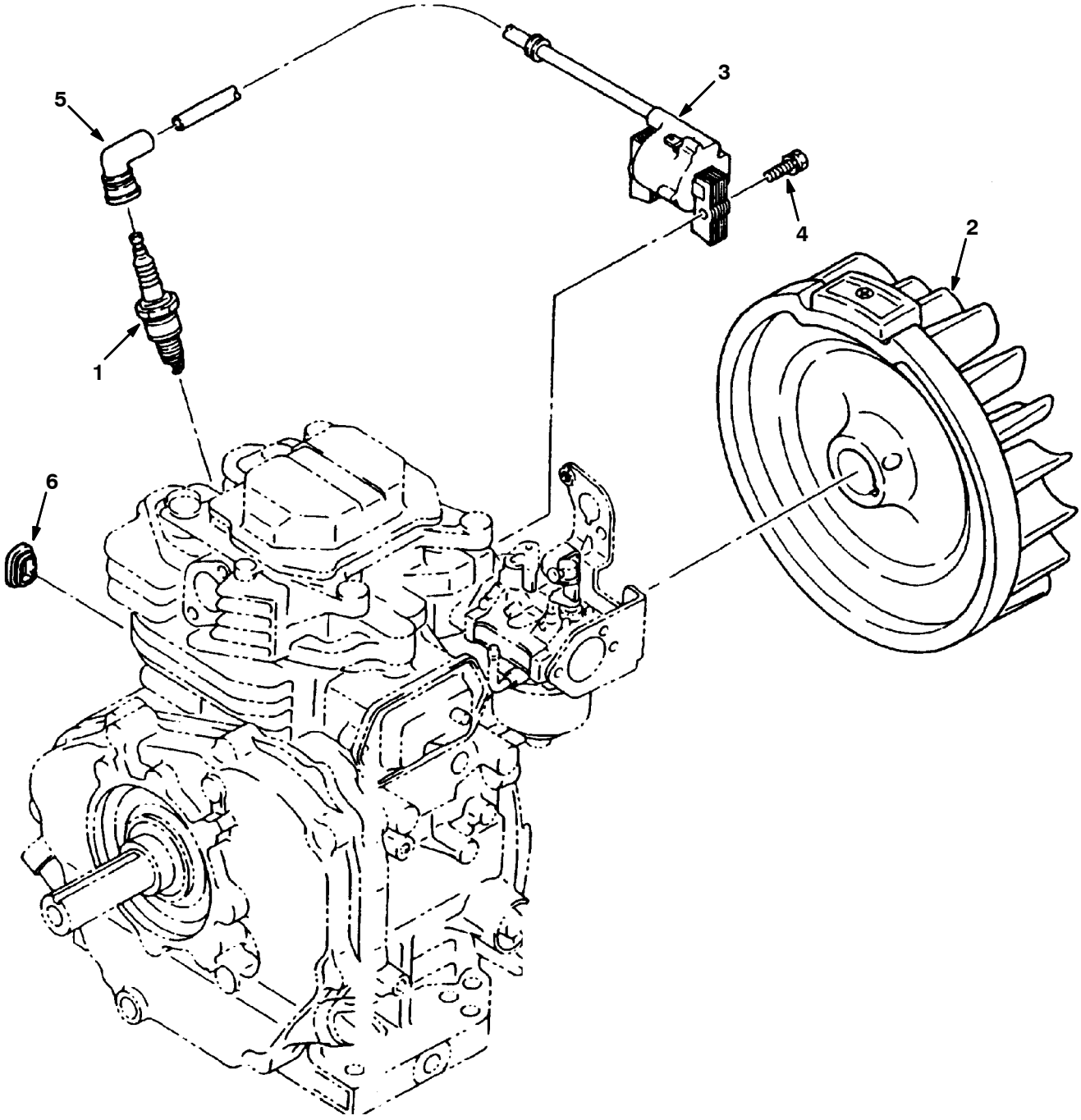

352682 - G

Fig. 10 - Ignition Group, Gasoline

Ref.	Tennant Part No.	Robin Part Number	Description	Qty.
1	385970	065-01405-90	Sparkplug (Gas)	1
2	385956	246-77205-21	Flywheel	1
3	385962	246-78201-21	Coil (Gas)	1
4	369571	001-14063-00	Bolt & Washer	2
5	369602	065-50000-51	Sparkplug Cap (Gas)	1
6	385963	227-75001-03	Grommet	1

Fig. 11 - Ignition Group, LPG

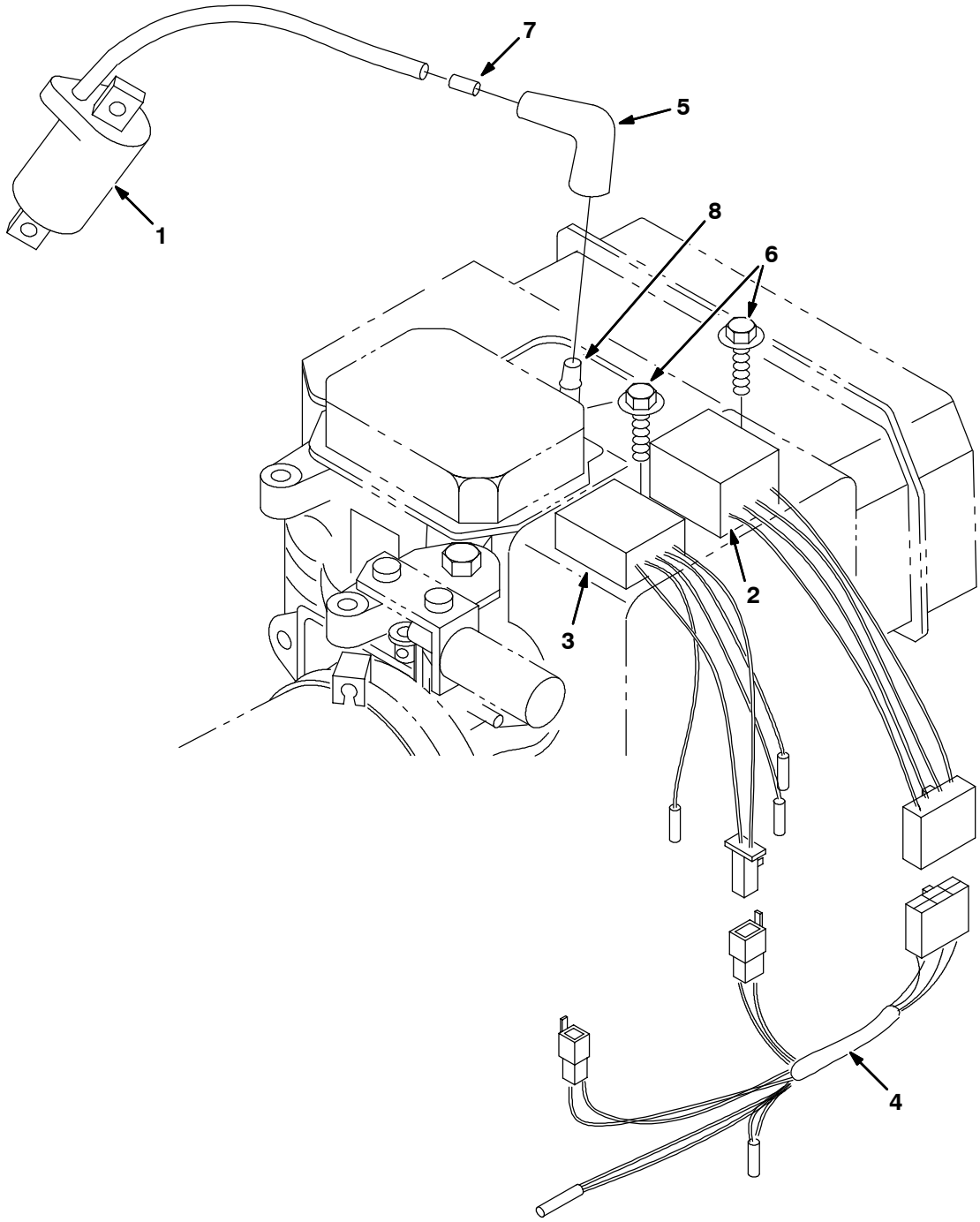

352684 - LP

Fig. 11 - Ignition Group, LPG

Ref.	Tennant Part No.	Robin Part Number	Description	Qty.
1	370893	223-71201-01	Coil, Ignition (Lpg)	1
2	369619	253-79501-01	Cdi Unit (Lpg)	1
3	374136	246-79611-01	Cdi Cntrlr(Lpg)	1
4	369652	253-73107-01	Wire 7 Cp (Lpg)	1
5	369603	065-50001-40	Spkplugcap(Lpg)	1
6	369582	011-00600-30	Flange Bolt	2
7	369656	065-90000-10	Plug Terminal	1
8	370808	065-01407-00	Sparkplug (Lpg)	1

Fig. 12 - Flywheel Group, LPG

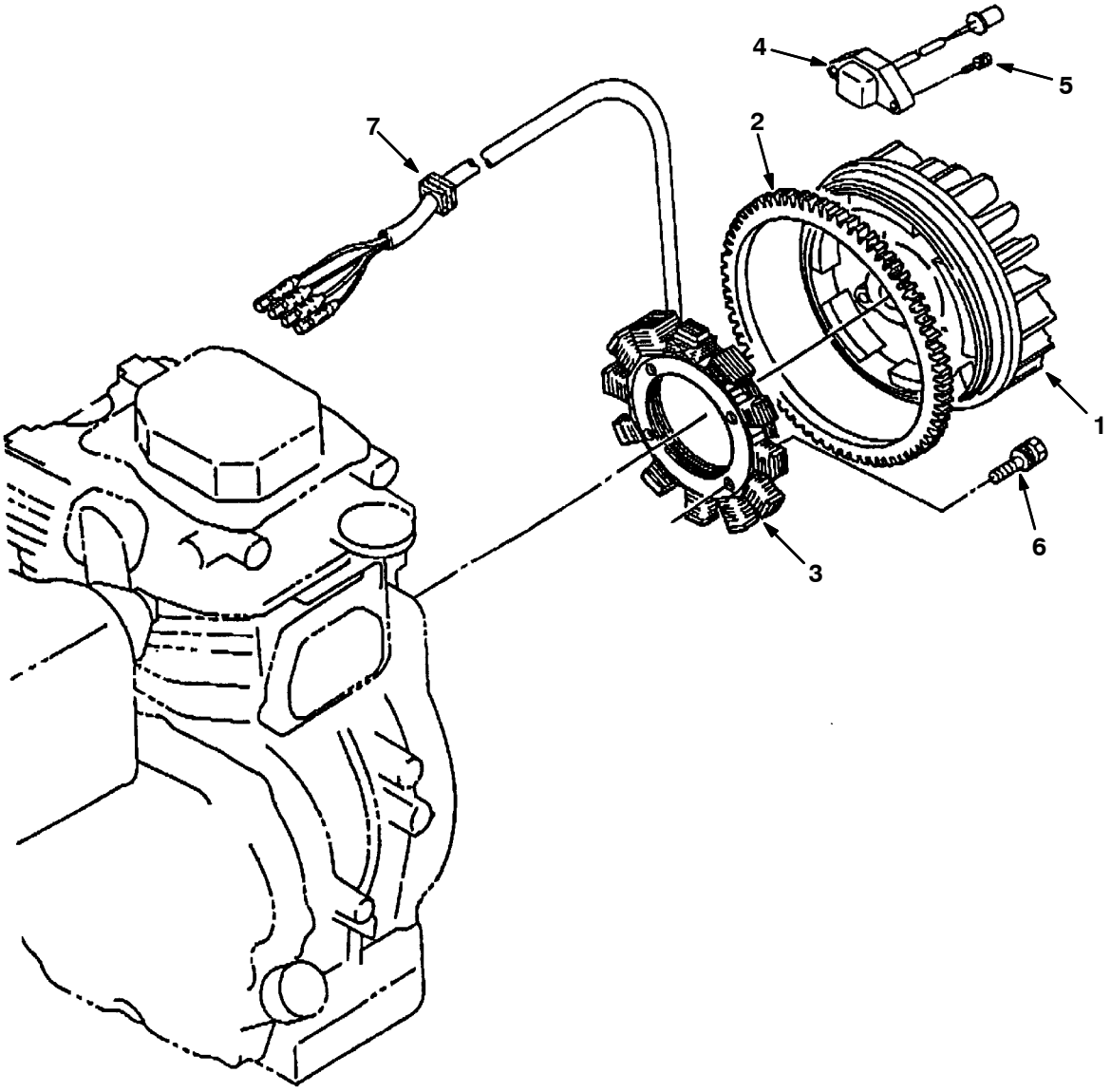

352814 - LP

Fig. 12 - Flywheel Group, LPG

Ref.	Tennant Part No.	Robin Part Number	Description	Qty.
1	373198	246-77207-01	Flywheel (Lpg)	1
2	385988	246-71002-03	Ring Gear	1
3	370828	253-79690-01	Coil, Stator	1
4	373199	246-79601-01	Coil, Sensor (Lpg)	1
5	369596	001-14062-50	Bolt & Washer Assy	2
6	385989	004-35062-00	Screw & Washer Assy	4
7	369607	226-75501-03	Grommet	1

Fig. 13 - Starter Breakdown, 385966

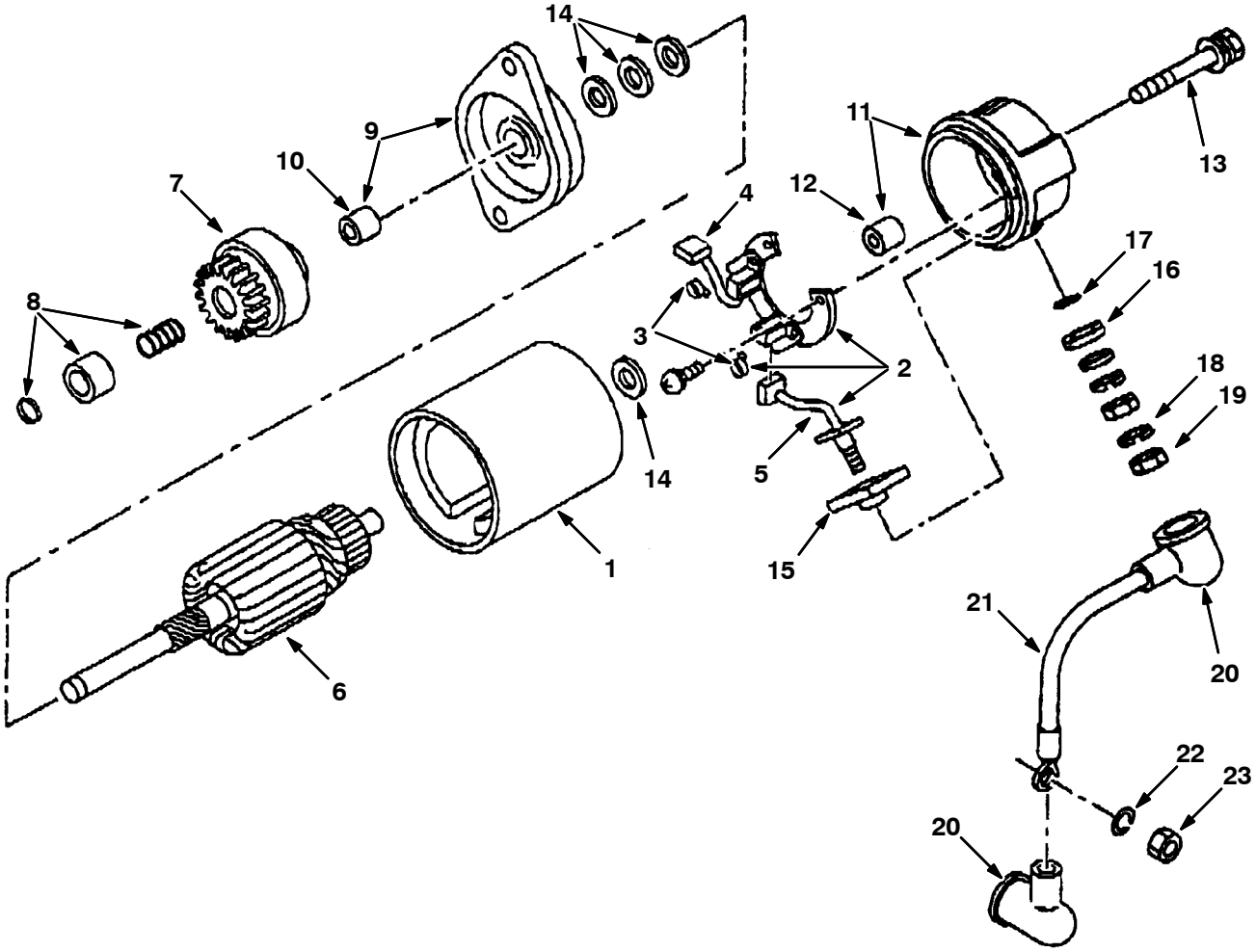

352694 - G, LP

Fig. 13 - Starter Breakdown, 385966

	Ref.	Tennant Part No.	Robin Part Number	Description	Qty.
▽		385966	246-70501-00	Starter Motor Assy	1
▲	1	385971	235-70560-08	York Assy	1
▲▽	2	385972	235-70530-08	Holder Assy, Brush	1
▲▲	3	385973	235-70545-08	Spring, Brush	2
▲▲	4	385974	235-70535-08	Brush (+)	1
▲▲	5	385975	235-70540-08	Brush (-)	1
▲	6	385976	235-70550-08	Armature Assy	1
▲	7	385977	246-70521-08	Pinion Assy	1
▲	8	385978	246-70571-08	Stopper Set, Pinion	1
▲▽	9	385979	246-70500-08	Front Cover Assy	1
▲▲	10	385980	214-70560-08	Front Metal	1
▲▽	11	385981	246-70505-08	Rear Cover Assy	1
▲▲	12	385982	113-70510-08	Case Metal	1
▲	13	385983	235-70575-08	Thrubolt	1
▲	14	385984	235-70555-08	Washer Kit	4
▲	15	385985	235-70565-08	N Brush 1	1
▲	16	385986	235-70566-08	N Brush 2	1
▲	17	385987	246-70580-08	O-ring	1
▲	18	369627	003-20060-00	Spring Washer	1
▲	19	369624	002-27060-00	Nut	1
	20	385990	214-78501-03	Wire Casing	2
	21	385991	214-73101-01	Wire 1 Cp	1
	22	369627	003-20060-00	Spring Washer	1
	23	369624	002-27060-00	Nut	1

Fig. 14 - Regulator and Solenoid Group

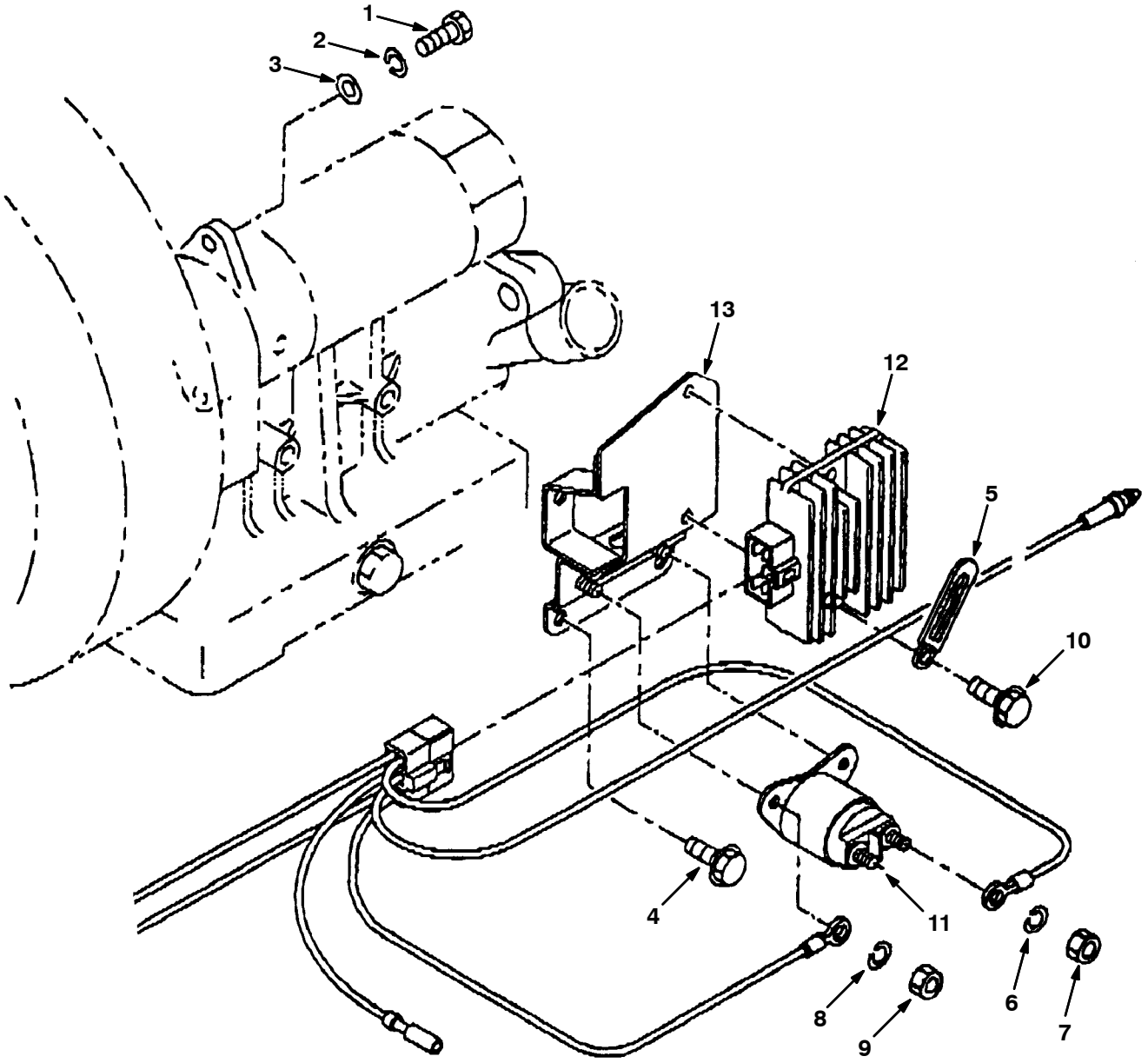

352696 - 6100, G, LP

Fig. 14 - Regulator and Solenoid Group

Ref.	Tennant Part No.	Robin Part Number	Description	Qty.
1	385992	214-79007-01	Bolt	1
2	385993	003-10080-01	Washer	1
3	369628	003-20080-00	Spring Washer	1
4	370976	011-00600-10	Flange Bolt	1
5	385994	056-60002-50	Clamp	1
6	369627	003-20060-00	Spring Washer	1
7	369624	002-27060-00	Nut	1
8	369626	003-20050-00	Spring Washer	1
9	369623	002-17050-00	Nut	1
10	385995	011-00601-40	Screw	1
11	80069	066-10000-10	Solenoid	1
12	80072	246-71901-01	Regulator	1
13	385996	246-76004-21	Bracket, Mount	1

SECTION 6

CONTENTS **PAGE**

PART NUMBER TO PAGE NUMBER CROSS REFERENCE LIST 6-2
PART DESCRIPTION TO PAGE NUMBER CROSS REFERENCE LIST 6-8

PART NUMBER TO PAGE NUMBER CROSS REFERENCE LIST

Part Number	Page Number
KS3-11041-01	5-5
KU3-11008-01	5-15
KU3-11059-01	5-15
001-10061-20	5-10
001-10081-60	5-9, 5-15
001-13082-80	5-9
001-13084-00	5-3, 5-5
001-14062-50	5-15, 5-23
001-14063-00	5-19
001-65081-20	5-3, 5-5
002-17050-00	5-27
002-18180-00	5-7
002-27050-00	5-15
002-27060-00	5-25, 5-27
002-38060-00	5-10, 5-11
003-10080-01	5-27
003-10180-00	5-7
003-13060-00	5-15
003-20050-00	5-27
003-20060-00	5-25, 5-27
003-20080-00	5-27
003-20180-00	5-7
004-31054-00	5-15
004-35062-00	5-23
005-19041-00	5-9
005-32054-01	5-7
00500-10	2-11
00500-15	4-2
00912	2-11
00918	2-57
00926	3-9
00927	2-33
00960	2-63
010-50602-30	5-9
010-50803-60	5-9
010-50804-30	5-3, 5-5
01047	2-51
011-00600-10	5-9, 5-13, 5-27
011-00600-20	5-3, 5-5
011-00600-30	5-3, 5-5, 5-21
011-00601-40	5-27
011-01000-20	5-3, 5-5
011-01000-40	5-3, 5-5
01314	2-7
014-50500-40	5-17
014-90800-20	5-9
01684	2-15, 2-19, 2-61, 3-7
017-00800-90	5-9
01714	2-35
01750	3-9
01754	2-13, 2-59
01760	2-41
018-00800-10	5-9
018-60600-20	5-15
020-02000-10	5-9
02076	3-9
021-11400-20	5-3, 5-5
023-02200-50	5-9
023-02200-60	5-9
023-02200-70	5-9
023-03501-60	5-7
023-03501-70	5-7
023-03501-80	5-7
02355	2-33
02356	2-33
02374	3-17
02384	2-55
02850	2-65, 3-3
02892	3-16
02942	2-61, 3-3, 3-7
02999	2-29
031-00600-20	5-3, 5-5
03192	2-11, 2-47
040-11400-30	5-3, 5-5
043-04300-15	5-17
044-03500-90	5-3, 5-5
04400	2-61, 3-7
056-52100-20	5-7
056-60002-50	5-27
060-01500-10	5-3, 5-5
060-03500-10	5-3, 5-5
06279	2-61, 3-7
064-13600-10	5-17
064-20042-10	5-17
064-20064-10	5-17
064-20064-30	5-17
064-20064-40	5-17
064-80001-00	5-17
06474A	2-43, 2-47
065-01405-90	5-19
065-01407-00	5-21
065-50000-51	5-19
065-50001-40	5-21
065-90000-10	5-21
06506	3-3
06524	2-65
06535	2-39, 2-51
06549	2-53, 3-11, 3-19
066-10000-10	5-27
06923	2-59
06942	2-9, 2-21, 2-63, 2-65
06943	2-9, 2-13, 2-39, 2-41, 2-55, 2-69
06944	2-41, 2-43, 2-59
06947	2-19
06949	2-35
06956	3-5
06957	2-21, 3-9
06958	2-49
06960	2-15, 2-19
06962	3-9
06963	2-43, 2-53
06967	2-59, 3-5
06972	2-61, 3-7
073-20039-00	5-17
07449	3-3
07464	2-21
07471	2-13
07515	2-19
07592	2-33
07790	2-13, 2-19, 2-21, 2-39
07791	2-7, 2-13, 2-15, 2-17, 2-19, 2-21, 2-23, 2-25, 2-31, 3-11, 3-13
07792	3-9
07807	2-65
07810	2-57
08085	2-69
08170	2-35, 2-41
08182	2-35, 2-43, 2-47
08407	2-37
08708	2-9, 2-13, 2-25, 2-35, 2-41, 2-43, 2-57, 2-59, 2-63, 2-65, 2-67, 2-69, 3-13
08709	2-11, 2-25, 2-27, 2-31, 2-39, 2-43, 2-45, 2-49, 2-51, 2-57, 2-59, 2-63, 3-3, 3-5, 3-18
08711	2-11, 2-39, 2-45, 2-61, 3-7, 3-14
08712	2-3, 2-4, 2-7, 2-49, 2-51, 2-61, 3-7
08713	2-4, 2-51
08716	2-67
09145	2-9, 2-13, 3-13
09146	2-13, 2-65
09162	2-33, 2-57
09164	2-13
09206	2-65
09252	3-11
09570	2-39
09737	2-11
09741	2-53
10137	2-27
10632-2	3-11
10632-4	2-17
10632-9	2-7
10752-2	2-23
10754	2-23
10770	2-21
10820	2-55
11109	2-39, 3-18
113-70510-08	5-25
11399	2-25
11442-23	2-23
11516	2-61, 3-7
11635	2-15, 2-19, 2-63
11747	2-49
11984	2-21
12138	2-53
12274	2-47
12312	2-53, 3-13, 3-19
12323	3-3
13015-1	2-27
13248	3-9
13513	2-35

Part Number	Page Number
14601	2-35
14799	2-11
15047	2-61, 3-3, 3-7
15331	2-33
15648	2-61, 3-3, 3-7
15678	2-61, 3-7
16081	2-33
16213	2-47
16368	2-7
16695	4-2
16735	2-7, 2-13, 2-17, 2-25, 3-11, 3-13
16930	2-15, 2-19
16931	2-7, 2-23, 2-31, 2-39, 2-51, 2-55, 2-57
16946	2-51
19065	2-65, 2-69
19066	2-13, 2-47, 3-11, 3-13
19200	2-15, 2-19
19315	2-21, 2-31
19630	2-29
19747	2-15, 2-19
19774	2-21
205-41901-03	5-3, 5-5
20536-1	2-51
214-70560-08	5-25
214-73101-01	5-25
214-78501-03	5-25
214-79007-01	5-27
222158	2-9
222159	2-3, 2-7, 2-49, 2-63
222268	2-15, 2-19
222290	2-76, 3-9
222460	2-7, 2-39, 2-59, 2-63, 3-5
222470	2-53
222534	2-13
222556	2-51
222683	2-13
223-71201-01	5-21
223061	2-11
223065	2-11
223068	2-11
223070	2-11
223072	2-11
223073	2-11
223075	2-11
223080	2-9
223153	2-37
223154	2-37
223157	2-37
223159	2-37
223160	2-37
223161	2-37
223198	2-47
223320	2-43
223470	2-4, 2-49, 2-51
223600	2-43
223601	2-43
224-17101-03	5-3, 5-5
226-75501-03	5-23
22655	4-2
22656	4-3
22658	4-2
22659	4-2
22660	4-2
22661	4-2
22662	4-2
227-75001-03	5-19
227-76015-01	5-3
234-32604-07	5-10, 5-11
234-35902-03	5-9
234-36003-08	5-10, 5-11
234-42703-01	5-15
234-78202-13	5-15
235-70530-08	5-25
235-70535-08	5-25
235-70540-08	5-25
235-70545-08	5-25
235-70550-08	5-25
235-70555-08	5-25
235-70560-08	5-25
235-70565-08	5-25
235-70566-08	5-25
235-70575-08	5-25
23683	2-35
23709	2-69
239-16302-13	5-3, 5-5
239-35001-06	5-9
24047	2-23
246-10801-03	5-3, 5-5
246-11002-21	5-3, 5-5
246-14202-03	5-3
246-14211-03	5-5
246-14301-01	5-3, 5-5
246-14401-01	5-3, 5-5
246-15101-03	5-3, 5-5
246-15501-02	5-3, 5-5
246-16002-03	5-3, 5-5
246-16006-03	5-3, 5-5
246-16007-03	5-3, 5-5
246-20901-01	5-7
246-22501-00	5-7
246-23001-03	5-7
246-23101-13	5-7
246-23301-03	5-7
246-24102-13	5-7
246-30102-11	5-9
246-31701-01	5-9
246-32608-00	5-10
246-32612-00	5-11
246-32901-03	5-9
246-33001-01	5-9
246-33301-03	5-9
246-33401-03	5-9
246-33501-03	5-9
246-33601-03	5-9
246-33701-13	5-9
246-34001-01	5-9
246-35201-03	5-9
246-35301-11	5-9
246-36001-13	5-9
246-36101-10	5-9
246-36120-13	5-9
246-36201-01	5-9
246-36701-03	5-9
246-42201-03	5-15
246-42304-01	5-15
246-42503-13	5-15
246-42801-13	5-15
246-43301-13	5-15
246-45001-01	5-3, 5-5
246-51224-01	5-13
246-51225-01	5-13
246-52701-12	5-13
246-60803-01	5-17
246-61601-21	5-17
246-62101-20	5-17
246-66001-03	5-17
246-66002-03	5-17
246-70500-08	5-25
246-70501-00	5-25
246-70505-08	5-25
246-70521-08	5-25
246-70571-08	5-25
246-70580-08	5-25
246-71002-03	5-23
246-71901-01	5-27
246-76004-21	5-27
246-76005-01	5-15
246-77205-21	5-19
246-77207-01	5-23
246-78201-21	5-19
246-79601-01	5-23
246-79611-01	5-21
247-10101-31	5-3
247-10110-01	5-5
247-13011-01	5-5
247-13011-11	5-3
247-15001-13	5-3, 5-5
247-23401-03	5-7
247-23402-03	5-7
247-23403-03	5-7
247-23501-07	5-7
247-23502-07	5-7
247-23503-07	5-7
247-62314-10	5-15
247-69901-00	5-15
247-91703-03	5-13
247-99001-07	5-3, 5-5
24929	2-23
25154	2-33
253-73107-01	5-21
253-79501-01	5-21
253-79690-01	5-23
25312	3-19
25537	3-15
25737	2-55
25887	2-57
26395-1	2-7
26426	2-21
26496	2-23
27992	2-33

Part Number	Page Number
28010	2-55
29558	2-41, 2-47
30013	2-4, 2-49
30181	2-21
30533	3-14
31357	4-2
31775	2-9
31988	2-13
32483	2-7, 2-13, 2-25, 2-39, 2-47
32485	2-39, 2-43
32486	2-35, 2-39, 2-43, 2-45, 2-47, 2-55, 3-14
32490	2-9, 2-15, 2-19, 2-21, 2-35, 2-49, 2-55, 2-63, 2-65, 2-67, 2-69
32491	2-7, 2-9, 2-13, 2-15, 2-19, 2-21, 2-27, 2-31, 2-49, 2-51, 2-53, 2-55, 2-57, 2-59, 2-63, 2-67, 3-15, 3-19
32492	2-15, 2-19, 2-27, 2-47, 3-3
32493	2-11, 2-59, 3-5
32646	2-7
32975	2-65
32980	3-13
32982	2-15, 2-19
32983	2-27, 3-15
330230	3-20
330231	3-20
330232	3-20
330233	3-20
330234	3-20
330235	3-20
330710	3-20
33518	2-69
33944	2-13
34176	4-2
34820	2-13
35836	2-53
35846	2-55
35973	2-57
36033	2-25
360369	3-15
360370	3-15
360520	3-11, 3-17
360801	2-41
360821	2-3, 2-49
360930	2-19
360973	2-7, 2-13
360991	2-31
361023	2-31
361339	2-3, 2-4, 2-7, 2-9, 2-37, 2-49, 2-57
361387	3-9
36191	2-41
361940	3-11
363087	2-47, 2-51, 2-53, 2-55
36328	2-53
363301	2-63
363503	2-7
36376	2-35
363976	3-3
363981	2-47
365029	2-23
36643	2-55
367573	2-25
367679	2-65
369319	2-39, 2-45
369345	2-39
369394	3-18
369502	5-3, 5-5
369505	5-3, 5-5
369507	5-3, 5-5
369508	5-3, 5-5
369513	5-3, 5-5
369540	5-10, 5-11
369542	5-9
369544	5-9
369548	5-9
369571	5-19
369572	5-15
369582	5-3, 5-5, 5-21
369583	5-17
369585	2-4, 5-17
369587	5-17
369596	5-15, 5-23
369602	5-19
369603	5-21
369607	5-23
369619	5-21
369623	5-27
369624	5-25, 5-27
369626	5-27
369627	5-25, 5-27
369628	5-27
369652	5-21
369656	5-21
369704	2-7
369781	2-59
369795	2-61, 3-7
369796	2-61, 3-7
370048	2-5
370808	2-3, 2-4, 5-21
370813	5-5
370828	5-23
370893	5-21
370894	5-15
370925	5-3, 5-5
370926	5-3, 5-5
370928	5-3, 5-5
370929	5-3, 5-5
370930	5-3, 5-5
370931	5-3, 5-5
370932	5-3, 5-5
370933	5-3, 5-5
370934	5-3, 5-5
370935	5-3, 5-5
370937	5-3, 5-5
370938	5-3, 5-5
370939	5-3
370940	5-3, 5-5
370941	5-3, 5-5
370942	5-3, 5-5
370943	5-3, 5-5
370944	5-3, 5-5
370945	5-3, 5-5
370946	5-3
370947	5-3
370948	5-3, 5-5
370949	5-3, 5-5
370950	5-3, 5-5
370951	5-3, 5-5
370952	5-3, 5-5
370953	5-7
370954	5-7
370955	5-7
370956	5-7
370957	5-7
370958	5-7
370959	5-7
370960	5-7
370961	5-7
370962	5-7
370963	5-7
370964	5-7
370965	5-7
370967	5-7
370968	5-7
370969	5-7
370970	5-7
370971	5-7
370972	5-7
370973	5-7
370974	5-9, 5-15
370975	5-9
370976	5-9, 5-13, 5-27
370977	5-9
370978	5-9
370979	5-9
370980	5-9
370981	5-9
370982	5-9
370983	5-9
370984	5-9
370985	5-9
370986	5-9
370987	5-9
370988	5-9
370989	5-9
370990	5-9
370991	5-9
370992	5-9
370993	5-9
370994	5-9
370995	5-9
370996	5-9
370997	5-9
370998	5-9
370999	5-9
371585	3-20
373153	5-9

Part Number	Page Number
373154	5-9
373155	5-9
373157	5-15
373158	5-15
373160	5-15
373163	5-15
373166	5-15
373167	5-15
373168	5-15
373169	5-15
373170	5-15
373171	2-3, 2-4, 5-10, 5-11
373172	5-13
373173	5-13
373174	5-13
373176	5-17
373177	5-17
373178	5-17
373179	5-17
373180	5-17
373184	5-17
373185	5-17
373186	5-17
373187	5-17
373188	5-15
373190	5-17
373195	2-13
373196	5-13
373197	5-15
373198	5-23
373199	5-23
373201	4-4
373202	4-4
373207	4-4
373208	4-4
373256	4-4
373258	4-4
373301	4-4
373302	4-4
373323	4-4
374136	5-21
375210	2-3, 2-4, 2-69
375411	2-9
37555	4-2
378769	2-65
378804	2-5
379212	3-7
379213	2-61
379665	2-13
379890	2-69
383715	2-3
383806	2-35, 4-3
383820	2-15, 2-19
383831	2-13
383852	2-21
384032	2-21
384114	2-65
384169	2-65
384246	3-3
384247	3-3
384286	2-21
384287	3-3
384400	3-11, 3-13
384403	2-65
384404	2-9
384405	2-37
384408	2-39
384410	2-65
384411	2-65
384413	2-67
384416	2-7
384419	3-3
384422	2-57
384423	2-7
384426	2-7
384431	2-33
384440	2-65
384442	2-27
384443	2-15
384447	2-21
384448	2-15, 2-19
384451	2-45
384455	3-9
384456	2-33
384458	3-9
384459	3-9
384461	3-9
384464	2-65
384473	2-5
384496	2-65
385650	2-37
385950	5-15
385952	5-15
385954	5-15
385956	5-19
385958	5-3
385959	5-10
385960	5-10, 5-11
385961	5-10
385962	5-19
385963	5-19
385965	5-11
385966	5-25
385967	5-5
385968	5-5
385969	5-5
385970	2-3, 2-4, 5-19
385971	5-25
385972	5-25
385973	5-25
385974	5-25
385975	5-25
385976	5-25
385977	5-25
385978	5-25
385979	5-25
385980	5-25
385981	5-25
385982	5-25
385983	5-25
385984	5-25
385985	5-25
385986	5-25
385987	5-25
385988	5-23
385989	5-23
385990	5-25
385991	5-25
385992	5-27
385993	5-27
385994	5-27
385995	5-27
385996	5-27
39005	2-41, 2-47
39019	2-61, 3-3, 3-7
390867	2-47
390868	2-41
391401	2-11
39277	2-15, 2-19, 2-27, 2-33, 2-39, 2-45, 2-53, 2-59, 3-18
39278	2-63
39279	2-67
39283	2-55, 3-3
39284	2-33, 2-43
39285	2-15, 2-19
392966	2-47
39311	3-3
39312	2-27, 2-43, 3-3
393129	2-7
39323	3-3
39326	2-11
39327	2-39
39338	2-11
39349	2-11, 2-17, 2-23, 2-25, 2-33, 2-39, 2-57, 3-11, 3-13
39391	2-63
39658	2-13, 2-59
398326	2-4
398327	2-4
398328	2-4
398525	2-59
40607	2-21
40678-1	2-7, 2-9
40758	2-49
41140	2-19
41142	2-19
41185	2-31, 2-63
41186	2-39, 3-9
41187	2-11
41342	2-33, 2-67
41345	2-61, 3-7, 3-14
41346	2-37
41430	2-33, 2-39, 2-43, 2-47, 2-51, 2-53, 2-55, 3-3
41722	2-3, 2-4, 2-63
41732	2-69
42227	2-31
43844	2-17
44078	2-13
44869	2-35
44906	2-61, 3-7

Part Number	Page Number
45482	2-35
45628	4-2
45779	3-11
46390	2-53
46461	2-3, 2-4, 2-33
46481	2-31
46800	2-55, 2-69
47508	2-39
47655	2-31
47720	2-21
49145	2-45
49225	2-37
49266	2-7, 2-69
49609	2-43, 2-51
49697	2-69, 3-3
50388	2-57
50902	2-33
51109	2-47
51225-1	3-3
53140	2-15
53400-1	2-23
53400-4	2-23
54345	2-7
54396	2-9
54400	2-59, 3-5
54745	2-47
55272	3-17
55619	2-4, 2-31
55740	2-3, 2-31
55845	2-47
56094	2-7
56799	3-16
56820	2-35
56821	2-31, 2-33
57039	2-3, 2-4, 2-33
57167	2-13
57345	2-27
57404	2-17
57570	2-23
57751	2-13, 3-17
57803	2-13, 3-17
57804	2-13, 3-13
57979	2-35
58286	2-15, 2-19
58518	3-11
58519	3-11
58520	3-11
59633	2-49
59965	3-13
62595-16	2-7
62595-5	2-7
64425	3-3
64772	2-29
65441	3-3
65527	2-21
65870-1	2-4
68275	2-9
68872	2-27
68873	2-27
69461	3-15
70006	2-31
72114	3-11, 3-13
72970	3-19
73020	2-21
74098	4-2
74174	4-2
74391	3-5
74455	2-9, 2-39, 2-43
75028	2-39
75575	2-41, 2-51
75934	2-47
763504	4-2
76438	3-3
76570	2-57, 2-59, 3-5
76782	2-35
77097	2-39
78122	2-23
79785	4-3
79788	4-3
79789	4-3
79790	4-3
79792	4-3
79793	4-3
79794	4-3
79795	4-3
79796	4-3
79797	4-3
79798	4-3
79799	4-3
79812	4-3
79820	4-3
80042	2-5, 3-7
80069	5-27
80072	5-27
80076	5-17
80127	2-61, 3-7
80173	2-13
80181	2-13
80317	3-3
80318	3-3
80331	2-13
80395	2-59, 3-5
80637	2-21
80921	2-65
81554	2-7
81557	2-23
81558	2-17, 2-23
81567	2-9
81569	2-43
81574	2-17, 2-23
81580	2-7
81581	2-7
81582	2-7
81584	2-17
81585	2-17
81601	2-7
81672	2-47
81681	2-45
81682	2-45
81685	2-41
81690	2-9
81691	2-65
81692	2-15, 2-19
81694	2-15, 2-19
81695	2-15, 2-19
81697	2-65
81705	2-57
81710	2-55
81711	2-55
81713	2-55
81715	2-3, 2-49
81716	2-49
81717	2-49
81719	2-49
81721	2-7
81722	2-49
81723	2-49
81725	2-3, 2-49
81726	2-3, 2-49
81727	2-3, 2-49
81728	2-49
81729	2-53
81731	2-53
81733	2-55
81734	2-51
81735	2-53
81736	2-51
81739	2-53
81740	2-3, 2-4, 2-51
81747	2-49
81748	2-3, 2-49
81750	3-7
81759	2-51
81769	2-55
81775	2-53
81776	2-55
81779	2-7
81780	2-55
81783	2-61, 3-7
81784	2-61, 3-7
81785	3-5
81786	2-61
81791	2-49
81794	2-51
81795	2-59
81796	2-55, 2-59
81797	2-49
81798	2-57
81803	2-69
81812	2-69
81816	2-65
81818	2-53
81819	2-55
81822	2-61, 3-7
81828	2-3, 2-4, 2-63
81830	2-3, 2-4, 2-63
81832	2-57
81838	2-3, 2-4, 2-63
81840	2-3, 2-4, 2-63
81842	2-63
81843	2-63
81844	2-63
81845	2-63

Part Number	Page Number
81848	2-63
81855	2-7
81860	2-67
81870	2-67
81884	2-53
81888	2-5
81889	2-69
81890	2-63
81891	2-63
81894	2-55
81899	2-3, 2-4, 2-55
81902	2-9
81909	2-9
81911	2-67
81912	2-9
81913	2-51
81917	2-63
81918	2-49
81919	2-61, 3-7
81934	3-11, 3-13
81937	2-76
81955	2-59, 3-5
81956	2-59
81959	2-59
81963	2-65
81965	2-3, 2-4, 2-69
81966	2-3, 2-4, 2-69
81971	2-9
81973	2-21
81975	2-21
81976	2-21
81979	2-7
81983	2-35
81986	2-35
81987	2-35
81991	2-35
81992	2-7
81996	2-9
81997	3-16
82829	2-17
82839	2-7, 2-43
83030	2-5
83031	2-5
83033	2-45
83036	2-39
83038	2-3, 2-4, 2-63
83039	2-3, 2-4, 2-69
83041	2-41
83044	2-37
83059	2-39
83069	2-39
83097	2-37
83099	2-39
83112	2-11
83113	2-11
83115	2-3, 2-4, 2-69
83116	3-16
83117	2-3, 2-4, 2-49
83119	2-3, 2-4, 2-49
83121	3-20
83122	2-9
83134	2-41
83136	2-41
83137	2-41
83138	2-41
83139	2-41
83140	2-47
83149	2-47
83157	2-7
83158	2-7
83160	3-11
83161	3-13
83165	2-65
83173	2-13
83189	2-3, 2-4, 2-53
83194	3-15
83199	3-3
83201	3-17
83207	3-11
83221	3-19
83225	3-13
83265	3-13
83267	3-14
83300	2-15
83301	2-19
83313	3-3
83315	3-3
83318	3-3
83324	3-3
83325	3-3
83332	3-3
83335	3-3
83338	3-3
83341	3-3
83342	3-3
83347	3-3
83348	3-3
83349	2-21
83384	2-69
83385	2-15, 2-19
83387	2-17
83393	2-25
83395	3-19
83420	2-3, 2-4, 2-41
83423	3-18
83425	2-51
83426	2-69
83427	2-69
83433	3-18
83435	3-16
83439	2-69
83440	2-39
83442	2-39
83443	2-39
83444	2-3, 2-39
83445	2-39
83447	2-67
83448	2-39, 4-2
83449	2-33, 4-4
83454	2-31
83457	2-29
83458	2-29
83459	2-29
83466	2-33
83468	2-57
83469	2-57
83470	2-57
83474	2-57
83479	2-33
83482	2-15, 2-19
83483	2-15, 2-19
83485	2-31
83486	2-31
83488	2-25
83491	2-25
83492	2-25
83493	2-25
83495	2-15, 2-19
83496	2-15, 2-19
83505	2-9
83508	2-27
83510	2-25
83511	2-25
83512	2-25
83513	2-25
83519	2-77
83520	2-77
83521	2-39
83523	2-33
83525	2-39
83526	2-27
83527	2-21
83528	2-13
83532	2-15, 2-19
83541	2-63
83542	2-69
84086	2-25
86824	2-21
86860	3-3
87172	2-51
87242	2-61, 3-7
87299	2-63
87308	2-7, 2-15, 2-19, 2-25, 2-63
87725	2-43
87816	3-3
97031	2-47

PART DESCRIPTION TO PAGE NUMBER CROSS REFERENCE LIST

A

Adjusting Screw, 5-9
Air Cleaner Assy (Gas), 5-10
Air Cleaner Assy (Lpg), 5-11
Alarm Kit, Backup, 12V, 6100, 3-13
Alternator, 3-9
Angle, Brace, 2-13
Angle, Fuellock Mount, 2-21
Angle, Muffler Hanger, 2-25
Angle, Muffler Support, 2-25
Angle, 2-59, 3-5
Arm Wldt, Brake Ext, 2-41
Arm Wldt, Lift Lh, 3-3
Arm Wldt, Lift Rh, 3-3
Arm, Brake, Lift, Lh, 2-41
Arm, Brake, Lift, Rh, 2-41
Arm, Idler Sheave, 2-33
Armature Assy, 5-25
Axle, Wheel, Front, 2-39

B

Backplate Assy, 4-4
Balancer Shaft 2, 5-7
Ball Bearing, 5-3, 5-5
Balljoint, 2-35
Battery, 12V, Wet, 2-27
Bearing Assy, Front Wheel, 2-39
Bearing Assy, Rear Wheel, 2-45
Bearing Assy, Vac Fan, 2-3, 2-63
Bearing, Ball, 0.47b 1.26d 0.39w, 2-3, 2-4
Bearing, Ball, 2-3, 2-39, 2-45, 2-53, 2-55, 2-63
Bearing, Cup & Cone Assy, 2-37
Bearing, Fiberglide, 3-3
Bearing, Flange, 2-11, 2-61, 3-3, 3-7
Bearing, Needle, 2-37
Bearing, Snap-In, 2-65
Bearing, Thrust 0.50B 0.87D 0.06W, 3-3
Bearing, Thrust, 0.53B 1.00D 0.03W, 2-49
Bearing, Thrust, 4-2
Bearing, 2-49, 2-57
Bellcrank, 2-35
Belt, 3V, 2-55
Belt, Seat, 3-14
Belt, V, [3l] 61.0l, 2-3, 2-4
Belt, V, [3v] 25.0l, 2-3, 2-4
Belt, V, [3v] 32.9l, 2-3, 2-4
Belt, V, [3v] 49.0l, 2-3, 2-4
Belt, V, 3l, 26.0l, 3-9
Belt, V, 3L610, 2-63
Belt, V, Hyd Pump, 2-3
Belt, V, Jackshaft Drive, 2-3
Belt, V, Main Brush, 2-3
Belt, V, Vac Fan, 2-3
Blind Cover, 5-3, 5-5
Blower Housing (Gas), 5-13
Body S/A, 4-4
Bolt & Washer (Gas), 5-10
Bolt & Washer Assy, 5-3, 5-5, 5-9, 5-15, 5-23
Bolt & Washer, 5-9, 5-19
Bolt And Washer Assy, 5-15
Bolt, Carriage, .38-16 X 1.25, 2-55
Bolt, Carriage, .38-16 X 1.50, 2-33
Bolt, Flange, 5-9
Bolt, Holddown, 10.0 Long, 2-27
Bolt, Shld .31D X 1.00, .25-20, 2-47
Bolt, 5-3, 5-5, 5-27
Boot, 90deg .50d .57d X .84, 3-9
Boot, Circuitbreaker, 3-17
Boot, 2-13, 2-27
Box Assy, Vacuum W/Label, 2-65
Brace, Seat Support, 2-9
Bracket Wldt, Flap, Front, 2-51
Bracket Wldt, Sidebrush, 2-61, 3-7
Bracket, Brush Arm, 2-53
Bracket, Clamp, Battery, 2-27
Bracket, Engine Module (Lpg Only), 2-9
Bracket, Guard, Hose, 2-57
Bracket, Heat Shield, 2-25
Bracket, Hyd Filter, 2-31
Bracket, Keeper, 3-3
Bracket, Latch, Hopper, 2-69
Bracket, Latch, 2-65
Bracket, Lip, Hopper, 2-67
Bracket, Mount, 2-65, 5-15, 5-27
Bracket, Mtg, Bellcrank, 2-35
Bracket, Mtg, Fire Extinguishe, 3-19
Bracket, Mtg, Switch, 3-13
Bracket, Skirt, Front, 2-51
Bracket, Support, Recirc, 2-49
Bracket, Tank, Lpg, 2-23
Bracket, Vacuum Box, 2-17, 2-23
Brake Kit, Disc, 2-3, 2-41
Breather Cover, 5-3, 5-5
Breather Plate, 5-3, 5-5
Breather, Hyd, 2-31
Brush (+), 5-25
Brush (-), 5-25
Brush Arm Wldt, 2-55
Brush Door Wldt, 2-53
Brush, Side, 3-7
Brush, Swp, 22l, Window, Pyp, Spl, 2-5
Brush&Spring Assy Se, 2-61, 3-7
Brush-Side Sweep 16.5D Ply (2-Row), 2-5
Brush-Side Sweep 16.5D Ply (3-Row), 2-5
Brush-Side Sweep 17D Stiff Ply, 2-5
Brush-Sweep 22Lg Poly, 2-5
Brush-Sweep Spl-22Lg-8Sr-Unmx, 2-5
Brush-Sweep Spl-22Lg-Wedg-Poly, 2-5
Brushholder, 2-61, 3-7
Bumper Wldt, V-Mop, 3-3
Bumper, Rubber, 2-65
Bushing, 4-3
Button, Plug, 2-7, 2-13

C

Cable Assy,Choke 37.00LG, 2-15
Cable, Battery, Pos 6Ga 25.Ol, 2-27
Cable, Sidebrush Lift Lh, 3-5
Cable, Sidebrush Lift Rh, 2-59
Cable, Sidebrush, 2-61, 3-7
Cable, 2-51
Caliper, Brake 6.5 - 8.0 Dia, 2-41
Camshaft, 5-9
Cap, Brush, 2-61, 3-7
Cap, Screw, 4-2
Cap, 4-3
Carburetor (Lpg), 5-15
Carburetor Assy (Gas), 5-15
Case Metal, 5-25
Catch, Draw Pull, 2-69
Cdi Cntrlr(Lpg), 5-21
Cdi Unit (Lpg), 5-21
Chain, Link, 2-49
Chain, O-Ring, Rlr, #40 X 51 P, 2-39
Chain, Roller #35, .375 Pitch, 2-11
Chain, Roller, #40, 049 Pitches, O-Ring, 2-3
Channel Wldt, Lift Lh, 3-3
Channel Wldt, Lift Rh, 3-3
Channel Wldt, Pump Mt, 2-33
Channel, Brake, Link, Upper, 2-41
Channel, Mtg, Brake, 2-47
Channel, Mtg, Sidebrush, 2-61, 3-7
Channel, Mtg, Spring, 2-47
Circuitbreaker, 15.0a, Resetable, 3-17
Circuitbreaker, 15 A, 2-13
Clamp, Hose, 2-21
Clamp, Cable, 0.63D 0.75W STL , 2-17
Clamp, Cable, 2-7, 2-9, 2-13
Clamp, Strap, 2-39
Clamp, Wormdrive, 2-17, 2-21, 2-25
Clamp, 2-25, 5-27
Clip, Christmas Tree, 2-25
Clip, 2-61, 3-7, 5-7, 5-15
Coil (Gas), 5-19
Coil, Ignition (Lpg), 5-21
Coil, Sensor (Lpg), 5-23
Coil, Stator, 5-23
Connecting Rod Assy, 5-7
Connecting Rod Bolt, 5-7
Console, Instrument, Ic, 2-13
Control Unit, 5-15
Coupling, 2-23
Crankcase (Gas), 5-3
Crankcase (Lpg), 5-5
Crankshaft, 5-7
Cup, Strainer, 5-17
Cylinder Baffle, 5-13
Cylinder Head (Gas), 5-3
Cylinder Head (Lpg), 5-5

D

Diode Unit, 5-15
Diode, Ele, Plug, 3-9
Diode, Electric Plug, 2-76
Dipstick, 2-15, 2-19
Disc Wldt, Brake 8.0 Dia X .18, 2-39
Dowel Pin, 5-3, 5-5

Drive Gear S/A, 4-4
Drive, 4-2
Duct, Air, Engine, 2-15, 2-19
Duct, Vinyl, 3-11, 3-13

E

Element Set, Fltr, Air [Robn], 2-4
Element Set, 5-10, 5-11
Element, Air Filter, 2-3
End Cap, 4-2
Engine, Robn Eh34 Lpg (See Engine Breakdown), 2-19
Engine-11Hp Gas (See Engine Breakdown), 2-15
Exhaust Pipe, 5-9
Exhaust Valve, 5-9
Extinguisher Kit, 6100, 3-19
Extinguisher, Fire, 3-19

F

Filter Assy, Oil,Spin-On,[Parker#929161], 2-4
Filter Package, Dust, Panel, 62 Pleats, 2-3
Filter Pkg, Dust, Panel 62plts, 2-3, 2-4
Filter Pkg, Dust, Panel, 62 Pleats, 2-69
Filter, Fuel, 2-4
Filter, Fuelock, 2-21
Filter, Oil, Hyd, 2-3, 2-31
Fitting, Bkhd, 2-23
Fitting, Brass, E90, 2-21
Fitting, Brass, Str, 2-21
Fitting, Brass, Tee, 2-23
Fitting, Elbow PM04/PF04, 2-21
Fitting, Elbow, 2-21
Fitting, Grease, 2-37
Fitting, Hyd, Elbow, 2-31, 2-33, 2-35, 2-39
Fitting, Hyd, Plug, 2-15, 2-19
Fitting, Hyd, Str, 2-15, 2-19, 2-31, 2-35, 2-39
Fitting, Hyd, Tee, 2-35
Fitting, Pipe, E90 Pf04/Pf04, 2-21
Fitting, Pipe, Elbow90, 2-21
Fitting, Pipe, Nipple, .25 Pt, 2-21
Fitting, Pipe, 2-21
Fitting, Str, 2-23
Fitting, Tee PF02/PM02/PM02, 2-21
Fitting, Tube End, 2-15, 2-19
Flange Bolt, 5-3, 5-5, 5-13, 5-21, 5-27
Flange Nut, 5-9, 5-10, 5-11
Flange, Bearing, 2-57
Flange, Mounting 2-Bolt, 4-2
Floor Tread, Anti-Slip, 2-7
Flywheel (Lpg), 5-23
Flywheel, 5-19
Frame Wldt, Main, Sweeper, 2-7
Frame Wldt, V-Mop, 3-3
Front Cover Assy, 5-25
Front Metal, 5-25
Frontplate Assy, 4-4
Fuel Filter, 5-17
Fuel Gauge, 5-17
Fuel Strainer Assy, 5-17
Fuel Tank Bracket, 5-17
Fuel Tank Cap, 5-17
Fuel Tank, 5-17
Fuelock Replacement Kit, 2-21

G

Gasket (Breathercover), 5-3, 5-5
Gasket (Breatherplate), 5-3, 5-5
Gasket (Brg Cover), 5-3, 5-5
Gasket (Head), 5-3, 5-5
Gasket (Muffler), 5-9
Gasket (Rocker Cover), 5-3, 5-5
Gasket Set, 5-3, 5-5, 5-9
Gasket, Air Intake, 2-15, 2-19
Gasket, Cap, Hyd, 2-31
Gasket, Filter Panel, 2-69
Gasket, 2-13, 5-3, 5-5, 5-9, 5-10, 5-11, 5-17
Geroler S/A, 4-2
Governor Gear, 5-3, 5-5
Governor Lever, 5-15
Governor Rod, 5-15
Governor Shaft, 5-15
Governor Sleeve, 5-3, 5-5
Governor Spring, 5-15
Grommet, Rbr, 0.63Id, For .13Matl, 3-11
Grommet, Rubber, 2-7, 2-17, 2-65
Grommet, 5-19, 5-23
Guard, Chain, 2-39
Guard, Fan Sheave, 2-63
Guard, Lights, 3-11
Guard,Sidebrush, 2-61, 3-7

H

Handle Wldt, 2-55
Handle, Hopper, (Painted), 2-67
Handle, 2-59
Harness, Alternator, 3-9
Harness, Shaker, 2-69
Harness, Wire, Main, 6100 G/LP, 2-76
Harness, Wire, Warning/Backup, 3-11, 3-13
Hinge, Seat Support, 2-9
Hinge, 2-7
Holder Assy, Brush, 5-25
Hopper, Rear, 2-67
Horn Assy, Back-Up Alarm, 12V, 3-13
Horn, 2-7
Hose, Fuel, .31Id 5.0L, 2-17
Hose, Fuel, .38Id 24.0L, 2-17
Hose, Fuel, 2-17
Hose, Hyd, Low04, Jf Str/E45, 2-29
Hose, Hyd, Med06, Jf Str/Str, 2-29
Hose, Hyd, Suc12, Jf Str/E45, 2-29
Hose, Hyd, 2-15, 2-19, 2-29
Hose, Lpg, Low Pressure, .375I, 2-21
Hose, Lpg, 2-23
Hose, Vacuum, 2-21
Hourmeter, Electronic, 2-13
Housing Assy, Bearing, 2-11
Housing Wldt, V-Mop, 3-3
Housing Wldt, Wheel, Front, 2-37
Housing Wldt, Wheel, Rear, 2-45
Housing, Bearing, 2-3, 2-63
Housing, Brg, Vacfan, 2-3, 2-4
Housing, Wheel, Front, 2-39
Housing,Blower (Lpg), 5-13
Housing, 4-2

I

Idler Gear S/A, 4-4
Impeller, 9.06 D X 0.375 B, 2-63
Instruction, Repair, Valve, 4-3
Instruction, Use And Care, 6100, 2-9
Insulation, Acoustic, 2-63
Insulation, Heat, 2-17, 2-23, 2-25
Insulation, Sound Foam, 2-7, 2-9, 2-15, 2-21
Insulator, 5-9
Intake Pipe, 5-9
Intake Valve, 5-9
Isolator, Rubber, Muffler, 2-25

J

Joint U, 2-11

K

Key Set, 2-13
Key, Sq, 0.25 X 0.25, 00.75l, 3-9
Key, Square, 2-11, 2-33, 2-57, 2-63
Key, Woodruff, 2-11, 4-2
Key, 4-4
Kit, Ci,Sloenoid, Damper, 2-65
Kit, Door, Brush, 2-7
Kit, Maint, 400hr [6100 G] Engine, 2-4
Kit, Maint, 400hr [6100 Lp] Engine, 2-4
Kit, Maint, 800hr [6100 G/Lp], 2-4
Kit, Perf, Sweeper, [6100 G/Lp], 2-3
Kit, Replmt, Bearing, Vacuum Fan, [6100], 2-3, 2-4
Kit, Replmt, Knob Assy, [6100], 2-3, 2-4
Kit, Replmt, Skirt [6100], 2-4
Kit, Replmt, Stator Assy, Brake, Disc, 2-3, 2-4
Kit, Seal, Hppr [6100], 2-4
Kit, Tire, Non Marking, 3-18
Knob Assy, 2-3, 2-53
Knob, M8X1.25 Insert, 2-53
Knob, Round, Press On .50, 2-55, 2-59
Knob, 3-3

L

Label (Warning), 5-17
Label Set, Oper, 6100 G/LP, 2-77
Label Set,Info&Hzd, 2-77

Label, 5-13
Lamp, 3-11
Latch Assy, Lpg Tank Mtg,W/Nut, 2-23
Latch, Door, 3-3
Latch, 2-7
Lens,Flashing Lite Amber, 3-11
Lens,Flashing Lite Blue, 3-11
Lens,Flashing Lite Red, 3-11
Lever, Recirc Adj, 2-49
Light Assy Head/Clr 12V, 3-17
Light Kit, Flsh Lrc 12V, 3-11
Light, Flsh, Amber, 12V, 3-11
Light, Indctr/Red 12V, 2-13
Light, Oil (Gas), 2-13
Light, Oil (LPG), 2-13
Link Connection, 2-39
Link, .12T 0.7W 1.5LL, 2-65
Link, Brake, Upper, 2-41
Link, Brake, 2-41
Link, Brush Arm, 2-55
Link, Chain, 2-11
Link, 2-65
Linkage Wldt, Valve, 2-35
Lintel Wldt, Rear, Ic, 2-9
Lock, LP Fuel, 2-21

M

Main Bearing Cover, 5-3, 5-5
Manual Pkg, 6100 Gas Jp, 3-20
Manual Pkg, 6100 Gas, 3-20
Manual, Cd-Rom, Oprtr & Parts, All [NA], 3-20
Manual, Eng Service, [Robin EH340], 3-20
Manual, Fiche, 6100 Gas, 3-20
Manual, Oprtr, 6100 Gas Es Na, 3-20
Manual, Oprtr, 6100 Gas Fr Na, 3-20
Manual, Service, 6100 G/Lp, 3-20
Module, Shaker, 12V, 2-13
Molding Kit, Side, 3-16
Molding, Trim 11-14Ga 11.50, 2-7
Molding, Trim 8.50, 2-7
Molding, Trim, 11-14 Ga, 4.0 (Lpg Only), 2-9
Molding, Trim, 2-23
Mop, Dust, Industrial, 3-3
Mop, Dust, 3-3
Motor, Electric, 12V, 2-61, 3-7
Motor, Hyd Gear (See Breakdowns), 2-39
Motor, Hyd Gear, 4-2
Muffler, 5-9

N

N Brush 1, 5-25
N Brush 2, 5-25
Nut, Flange M6, 2-13
Nut, Hex Flange, M6, 2-19
Nut, Hex Flange, M8, 2-15, 2-19
Nut, Hex M3 Ss, 2-65
Nut, Hex, Flange, M06-1.0, 2-21, 2-39
Nut, Hex, Flange, M08-1.25, 2-7, 2-13, 2-17, 2-21, 2-23, 2-25, 2-31, 3-11, 3-13
Nut, Hex, Flexlock, .31-24, 2-63
Nut, Hex, Flng, M10 X 1.5, 3-9
Nut, Hex, Lock, .25-20, Nl, 2-47
Nut, Hex, Lock, .25-28, Nl, 2-35
Nut, Hex, Lock, .31-18, Nl, 2-27, 2-41, 3-15
Nut, Hex, Lock, .38-16, Nl, 2-33, 2-55
Nut, Hex, Lock, M04-0.7, Nl, 3-3
Nut, Hex, Lock, M05-0.8, Nl, 2-53, 3-11, 3-19
Nut, Hex, Lock, M06 X 1.0, Nl, Ss, 2-3, 2-4
Nut, Hex, Lock, M06-1.0, Nl,Ss, 2-7, 2-49, 2-51, 2-61, 3-7
Nut, Hex, Lock, M06-1.0, Nl, 2-9, 2-13, 2-25, 2-35, 2-41, 2-43, 2-57, 2-59, 2-63, 2-67, 2-69, 3-13
Nut, Hex, Lock, M08 X 1.25,Nl, Ss, 2-4
Nut, Hex, Lock, M08 X 1.25,Nl, 2-43
Nut, Hex, Lock, M08-1.25,Nl,Ss, 2-51
Nut, Hex, Lock, M08-1.25,Nl, 2-11, 2-25, 2-27, 2-31, 2-39, 2-45, 2-49, 2-51, 2-57, 2-59, 2-63, 3-3, 3-5, 3-18
Nut, Hex, Lock, M10-1.5, Nl, 2-33, 2-39, 2-43, 2-47, 2-51, 2-53, 2-55, 3-3
Nut, Hex, Lock, M12-1.75,Nl,Ss, 2-53
Nut, Hex, Lock, M12-1.75,Nl, 2-11, 2-39, 2-45, 2-61, 3-7, 3-14
Nut, Hex, Std, .25-28, 2-35
Nut, Hex, Std, .50-13, Lh, 2-55
Nut, Hex, Std, M03-0.5, 2-13, 2-59
Nut, Hex, Std, M08-1.25, 3-3
Nut, Hex, Std, M10-1.5, 2-43, 3-3
Nut, Hex, Std, M10-1.50, 2-27
Nut, Hexslot 1.25-12, 2-37
Nut, M4, 2-65
Nut, M6, 2-65
Nut, Wheel, .44-20 X 60 Angle, 2-39, 3-18
Nut, 2-23, 5-7, 5-9, 5-15, 5-17, 5-25, 5-27

O

O-ring, 5-25
Oil Scraper, 5-7
Oil Seal, 5-3, 5-5
Oil, Hyd, 5/20, 1 Gal, 2-4

P

Pad, 2-7, 2-43, 2-47
Panel Assy, Filter, 2-69
Panel Weldt, Filter, 2-69
Panel Wldt, Shaker, 2-69
Panel, Baffle, Air Intake, 2-15, 2-19
Panel, Heat Shield, 2-25
Panel, Perma-Filter, 2-69
Panel, Seat Support, Ic W/Label, 2-9
Pedal Wldt, Brake, 2-47
Pedal Wldt, 2-51
Pedal, Accelerator, 2-43
Pedal, Brake Lock, 2-47
Pedestal, 3-11, 3-13
Pin, Axle, Rear, 2-45
Pin, Clevis, .31 Dia X 1.75 Lg, 2-7
Pin, Clevis, 2-35, 2-41, 2-43, 2-47, 2-55, 2-61, 2-69, 3-3, 3-7
Pin, Cotter, 2-35, 2-41, 2-43, 2-47
Pin, Hair Cotter, 2-61, 2-69, 3-3, 3-7
Pin, Pivot, 2-65
Pin, 2-61, 3-7
Pinion Assy, 5-25
Pipe, Exhaust, Tail, 2-25
Piston Pin, 5-7
Piston Ring Set, +.25mm, 5-7
Piston Ring Set, +.50mm, 5-7
Piston Ring Set, Std, 5-7
Piston, +.25mm, 5-7
Piston, +.50mm, 5-7
Piston, Std, 5-7
Pivot, Motor, 2-57
Plate Wldt, Control, 2-43
Plate Wldt, Seat, Ic, 2-9
Plate Wldt, Swivel, 2-37
Plate, Arm Adj, 2-53
Plate, Baffle, Exhaust, 2-25
Plate, Brush Lift, 2-53
Plate, Damper, 2-65
Plate, Deflector, Heat, 2-25
Plate, Door, Brush, 2-7
Plate, Flap, Rear Adj, 2-55
Plate, Housing, Bearing, 2-63
Plate, Inlet, Fan (Painted), 2-63
Plate, Jackshaft Mt., 2-57
Plate, Jackshaft Mt, 2-57
Plate, Latch, 3-3
Plate, Link, Flap, 2-51
Plate, Mtg, 2-39
Plate, Sidebrush Lift, 2-59, 3-5
Plate, Swivel, 2-37
Plug & O-Ring, 4-3
Plug Assembly, 4-3
Plug Cover, 5-17
Plug Terminal, 5-21
Plug Wldt, 2-53
Plug, Brush Drive, Splined, 2-55
Plug, Brush, Drive, 2-53
Plug, 2-13, 3-17, 4-2, 5-3, 5-5
Poppet, 4-3
Pouch, 2-9
Pulley, Cable, 1.5d, Nyl, 2-59
Pulley, 2-33, 2-55, 3-5
Pump, Hyd Gear (See Breakdowns), 2-33
Pump, Hyd Gear, 4-4
Push Rod, 5-9

Q

Quick Mop Kit, 6100, 3-3

R

Race Thrust, 4-2
Rail, 3-15
Rear Cover Assy, 5-25
Regulator, 2-21, 5-27
Relay, 12Vdc, 40Amp Spdt, 3-13
Relay, 12V 40 A, SPDT, 2-13
Release Lever, 5-9
Repair Info,Mtr, 4-2
Repair Info,Pmp, 4-4
Reservoir, 2.0Gal, 2-31
Retainer, Flap, 2-49
Retainer, Recirc, Flap, 2-49
Retainer, Recirculation Flap, 2-49
Retainer, Ring, 4-3
Retainer, Spring, 2-43
Retainer, 2-51, 2-53, 2-65
Return Spring, 5-9
Ring Gear, 5-23
Ring, Retaining, 32Mm, 2-57
Rivet, Plstc, 3-19
Rivet, Pop, 2-65, 2-69, 3-16
Rocker Arm Assy, 5-9
Rocker Cover, 5-3, 5-5
Rocker Shaft, 5-9
Rod Spring, 5-15
Rod, Damper, 2-65
Rod, Hose Support, 2-39
Rod, Propelling, 2-9
Rod, Threaded, 3-3
Rod-Thrd, 2End .25-28, 2-35
Rubber Pipe, 5-3, 5-5

S

Scr Hex M12X1.75 20, 2-59, 3-5
Scr-Butn M12X1.75 25 Nylonlo, 2-37
Scr-Hex M 8X1.25 60 Full Thd, 3-3
Scr-Shld .375 X 1.50L .31-18, 2-41
Screen, 2-15, 2-19
Screw & Washer Assy, 5-23
Screw, Set, .25 -20 X .25, 2-11
Screw, Btn, M08 X 1.25 X 25, Ss, 2-4
Screw, Cap, 4-4
Screw, Flat, M08-1.25X 16,10.9, 2-49
Screw, Flat, M08-1.25X 25,10.9, 2-57
Screw, Flat, M10-1.5 X 35,10.9, 2-39, 2-51
Screw, Flt, M08 X 1.25 X 16, 10.9, 2-3
Screw, Hex 6 X 1.0 16 Pltd (Lpg Only), 2-9
Screw, Hex 6 X 1.0 16 Pltd, 2-57
Screw, Hex 6X 1.0 16 Pltd, 2-7
Screw, Hex 6X 1.0 16 Pltd, 2-37, 2-49
Screw, Hex Forming, 2-39
Screw, Hex M10, 2-15, 2-19
Screw, Hex M4, 2-65
Screw, Hex M6, 2-13, 2-19
Screw, Hex M8, 2-15, 2-19
Screw, Hex, .25-20 X 0.50, G5, 2-21, 2-31
Screw, Hex, .31-18 X 0.75, G5, 2-9
Screw, Hex, .31-24 X 0.75, G5, 2-33
Screw, Hex, .38-16 X 2.50, G5, 2-33
Screw, Hex, Fmg, M05-0.8 X 16, 2-47
Screw, Hex, Fmg, M06-1.0 X 10, 2-9
Screw, Hex, Fmg, M06-1.0 X 12, 2-9, 2-43
Screw, Hex, Fmg, M06-1.0 X 25, 2-7, 2-49, 2-63
Screw, Hex, M05-0.8 X 12, 8.8, 3-19
Screw, Hex, M05-0.8 X 12, 8.8, 2-53, 3-13
Screw, Hex, M05-0.8 X 20, 3-11
Screw, Hex, M06 X 1.0 X 12, 8.8, 2-15, 2-19
Screw, Hex, M06 X 1.0 X 16, Fmg, 2-3, 2-4
Screw, Hex, M06 X 1.0 X 25, Fmg, 2-3
Screw, Hex, M06-1.0 X 12, 8.8, 2-7, 2-25
Screw, Hex, M06-1.0 X 12, Ss, 2-15, 2-19, 2-63
Screw, Hex, M06-1.0 X 16, 8.8, 2-9, 2-21, 2-63, 2-65
Screw, Hex, M06-1.0 X 16, Ss, 3-7
Screw, Hex, M06-1.0 X 20, 8.8, 2-9, 2-39, 2-55
Screw, Hex, M06-1.0 X 20, Nl, 2-47
Screw, Hex, M06-1.0 X 20, Ss, 2-67
Screw, Hex, M06-1.0 X 25, 8.8, 2-43, 2-59
Screw, Hex, M06-1.0 X 50, 8.8, 2-35
Screw, Hex, M06-1.0 X 16, Ss, 2-61
Screw, Hex, M06-1.0 X 20, 8.8, 2-41
Screw, Hex, M06-1.0 X 25, 8.8, 2-41
Screw, Hex, M06-1.0x20, 8.8, 2-69
Screw, Hex, M08 X 1.25 X 60, 8.8, 3-9
Screw, Hex, M08-1.25 X 40, 8.8, 2-33
Screw, Hex, M08-1.25 X 12, 8.8, 2-57
Screw, Hex, M08-1.25 X 16, 8.8, 2-7, 2-13, 2-17, 2-25, 3-11, 3-13
Screw, Hex, M08-1.25 X 20, 8.8, 2-7, 2-23, 2-31, 2-39, 2-51, 2-55, 2-57
Screw, Hex, M08-1.25 X 25, 8.8, 2-27, 2-33, 2-39, 2-45, 2-53, 2-59, 3-18
Screw, Hex, M08-1.25 X 30, 8.8, 2-57, 2-59, 3-5
Screw, Hex, M08-1.25 X 40, 8.8, 2-67
Screw, Hex, M08-1.25 X 45, 8.8, 3-5
Screw, Hex, M08-1.25 X 50, 8.8, 2-63
Screw, Hex, M08-1.25 X 60,8.8, 2-21
Screw, Hex, M08-1.25 X 70, 8.8, 2-67
Screw, Hex, M08-1.25 X 80, 8.8, 2-49
Screw, Hex, M08-1.25 X150, 8.8, 2-51
Screw, Hex, M10 X 1.5 X 45, 8.8, 3-9
Screw, Hex, M10-1.5 X 25, 8.8, 2-55, 3-3
Screw, Hex, M10-1.5 X 35, 8.8, 2-33, 2-43
Screw, Hex, M10-1.5 X 40, 8.8, 2-15, 2-19
Screw, Hex, M10-1.5 X 50, 8.8, 2-15, 2-19
Screw, Hex, M10-1.5 X 60, 8.8, 2-43
Screw, Hex, M10-1.5 X 90, Fl, 3-3
Screw, Hex, M10-1.5 X 30, 8.8, 2-11, 2-47
Screw, Hex, M10-1.5 X 60, 8.8, 2-53
Screw, Hex, M12-1.75 X 25, 8.8, 2-61, 3-7, 3-14
Screw, Hex, M12-1.75 X 30, 8.8, 2-37
Screw, Hex, M12-1.75 X 60, 8.8, 2-61, 3-7
Screw, Hex, M12-1.75 X120, 8.8, 2-53
Screw, Hex, 2-47, 2-63
Screw, Pan, .31-18 X 0.75, G1, 3-15
Screw, Pan, #12- X 0.50,, 2-7, 2-13
Screw, Pan, M03-0.5 X 12, 4.8, 2-13
Screw, Pan, M03-0.5 X 25, 4.8, 2-59
Screw, Pan, M04 X 0.7 X 20, Ss, 3-3
Screw, Pan, M04-0.7 X 10, Ss, 2-69, 3-3
Screw, Pan, M06-1.0 X 12, Ss, 2-7
Screw, Pan, M06-1.0 X 16, 4.8, 2-9, 2-13
Screw, Pan, M06-1.0 X 20, 4.8, 2-13
Screw, Pan, M06-1.0 X 35, 4.8, 2-13
Screw, Pan, M06-1.0 X 16, 3-13
Screw, Pan, M08-1.25X 20, 4.8, 2-11
Screw, Pan, 2-65
Screw, Panhead, 5-15
Screw, Set, .25-20 X 0.31, Soc, 2-39
Screw, Set, .31-18 X 0.50, Soc, 2-11
Screw, Set, #10-32 X 0.38,, 3-3
Screw, Set, M06 X 1.0 X 16, Soc, 3-9
Screw, Set, M06-1.0 X 6, Soc, 2-63
Screw, Set, M06-1.0 X 8, Nl, 2-33, 2-57
Screw, Soc, M08 X 1.25 X 16, 12.9, 2-43
Screw, Soc, M08-1.25 X 16, Al, 2-51
Screw-Hex M10X1.25 20 8.8 Pltd, 2-15, 2-19
Screw, 2-49, 2-51, 4-2, 5-17, 5-27
Seal Kit, Hopper, 6100, 2-69
Seal Kit, Hopper, 2-3
Seal Kit, Motor, 4-2
Seal Kit, Pump, 4-4
Seal Kit, Vlv, 4-3
Seal, Bulb .38 X .75 X 22.62Lg, 2-3, 2-69
Seal, Bulb .50 X .50 X 9.19Lg, 2-3, 2-69
Seal, Bulb, .50th, .50w X 09.19l, 2-4
Seal, Bulb, 41.1 Lg., 2-15, 2-19
Seal, Bulb, Str, .38th, 0.75w X 22.6l, 2-4
Seal, Bulb, Str, 0.76h .93w 23.5l Adh, 2-4
Seal, Bulb, 2-25
Seal, Foam Rbr .25 X .50 X .20, 2-9
Seal, Foam Rbr, .25 X .50 X 22.63, 2-51
Seal, Foam, Extrusion 23.5, 2-3
Seal, Foam, 2-69
Seal, Ring, 2-37
Seal, Vac Fan, 2-63
Seat Kit, Slides, 3-15
Seat, 2-9
Seatbelt Kit 6100, 3-14
Sensor,Lev,Oil (Gas), 5-3
Sensor,Lev,Oil (Lpg), 5-5
Shaft, Brush Drive .88Dx5.2L ., 2-55
Shaft, Drive, Vacfan, 2-3, 2-4
Shaft, Fan, 2-3, 2-63
Shaft, Output, 4-2
Shaft, Steering (Replaced by 391401), 2-11
Shaft, Steering, 2-11
Shaft, W/ Sprocket, Steering, 2-11
Shaft, 2-57
Sheave, 3l 1 Groove, 4.00pd, 3-9
Sheave, 3L,1G,1.621Pd,0.375Id, 2-63
Sheave, 3V 3.30 Pd., 2-57
Sheave, 3V 3.30 Pd, 2-33

Sheave, 3V,2Gr, 3.30Pd, 2-33
Sheave, Combination, 3L, 2-57
Sheave,Idler,W.Brng,Plastic, 2-33
Sheave, 2-55
Shim .010 Thk, 4-3
Shim .015 Thk, 4-3
Shim .035 Thk, 4-3
Shroud, Front, 6100, 2-7
Shroud, Left, 6100 Ic, 2-7
Shroud, R.H., 2-7
Skirt Kit, , 2-49
Skirt Kit, 2-3
Skirt, Front, 2-3, 2-4, 2-51
Skirt, Recirculation, Front, 2-3
Skirt, Recirculation, Rear, 2-3
Skirt, Recirculation, 2-3, 2-49
Skirt, Side, L.H., 2-3, 2-49
Skirt, Side, Lh, 2-3
Skirt, Side, R.H., 2-3, 2-49
Skirt, Side, Rh, 2-3
Skirt, Side, 2-3, 2-4, 2-49
Sleeve, .375B .50D 2.54, 2-49
Sleeve, P/M, 0.437d 0.318b 1.15l 430ss, 2-7
Sleeve, 2-7, 2-39, 2-41, 2-51, 2-59, 2-63, 3-5
Soleniod, 12vdc, Engine, 2-15, 2-19
Solenoid, 12 Vdc, Damper, 2-65
Solenoid, Filter Shaker, 2-69
Solenoid, 5-27
Spacer (Rocker Shaft), 5-9
Spacer Plate, 4-2
Spacer, 0.6, 5-7
Spacer, 0.8, 5-7
Spacer, 1.0, 5-7
Spacer, Flanged, 2-47, 2-51, 2-53, 2-55
Spacer, Spring, 3-3
Spacer, 2-33, 2-43, 2-49, 2-53, 3-3, 4-3, 5-9
Sparkplug (Gas), 2-3, 5-19
Sparkplug (Lpg), 2-3, 5-21
Sparkplug Cap (Gas), 5-19
Sparkplug, Gas [Robn], 2-4
Sparkplug, Lpg [Robn], 2-4
Speed Control, 5-15
Spkplugcap(Lpg), 5-21
Spring Pin, 5-9
Spring Retainer, 5-9
Spring Washer, 5-7, 5-25, 5-27
Spring, Brush, 5-25
Spring, Compression, 2-47
Spring, Die .50 Id 1.00 Od 1.25, 2-61
Spring, Ext, .50D .037W 3.00L, 2-47
Spring, Extension, 2-61, 3-3, 3-7
Spring, Parking Brake, 2-47
Spring, Tension, Shaker, 2-69
Spring, Tension, 2-41, 2-47, 2-51, 2-55, 2-65
Spring, Torsion, 3-3
Spring,Die .50 Id 1.00 Od 1.25, 3-7
Spring, 4-3, 5-15
Sprocket Wldt, Ic, 2-39
Sprocket, #40 12T 1.00 Id, 2-39
Sprocket, Steering, Drive, 2-37
Sprocket, Steering, 2-11
Starter Motor Assy, 5-25
Stopper Set, Pinion, 5-25
Strainer, Hyd 10Gpm 100Mesh, 2-31
Strap, Mtg, Hyd Tank, 2-31
Strip, Bumper, 3-16
Strip, Control Spring, 2-43
Strip, Link, Brush Lift, 2-55
Strip, Retainer, Bumper, 3-16
Strip, Retainer, 2-49
Stud, M10-1.50 X 35, 2-27
Stud, 5-3, 5-5, 5-9
Support Wldt, Recirculation, 2-49
Support Wldt, Side Brush, 2-59
Switch, Micro, Spdt, 2-59
Switch, Pushmom, Spst100A 12V, 2-13
Switch, Rocker, Mom, On-Off, D, 2-13
Switch, Rocker, Spdt, 3Pos, 3-11
Switch, Rocker, 3-17
Switch, Roller, 3-13
Switch,, 2-13

T

Tank-Lp,20#,Vap,Both,Fill Ga L, 2-23
Tappet, 5-9
Terminal, Bullet, .156m 18/22awg, 2-15, 2-19
Thermostat, Spdt, 2-65
Thrubolt, 5-25
Tie, Cable 1.75D Max 7.50Lg, 2-7, 2-69
Tire & Rim Assy, 2-39
Tire, Solid, Non Mark 12X3, 3-18
Tread, Floor, 2-7
Tube, 0.75d 0.41b 1.2l Stl, 3-9
Tube, Axle, 2-67
Tube, Fill, 2-15, 2-19
Tube, Fuelline, 2-17
Tube, 2-19, 2-63

V

V-Belt, 3V0250, 2-33
V-Belt, 3V0490 Cogged, 2-33
Valve Guide (Gas), 5-3
Valve Guide (Lpg), 5-5
Valve Spring, 5-9
Valve, Check, 2-21
Valve, Hyd Cntrl Man (See Breakdowns), 2-35
Valve, Hyd Cntrl Man, 4-3
Valve, Press Relief, Lpg Rego, 2-23
Video, Operation 6100 G/Lp, 3-20

W

Washer Kit, 5-25
Washer, .516B .90D .07Cr, 2-63
Washer, 0.40b 1.12d .12, Stl, Pl, 3-9
Washer, 0.52b 0.90d .07, Stl, Pl, 2-3, 2-4
Washer, Belleville .31 Pltd, 2-39
Washer, Belleville, .25, 2-31, 2-63
Washer, Belleville, .31, 3-9
Washer, Belleville, .38, 2-11
Washer, Belleville, 2-53
Washer, Flat, .25 Hard, 2-9, 2-15, 2-19, 2-21, 2-35, 2-49, 2-55, 2-63, 2-65, 2-67, 2-69
Washer, Flat, .25 Sae, 2-7, 2-13, 2-25, 2-39, 2-47
Washer, Flat, .25 Ss, 2-15, 2-19, 2-61, 3-7
Washer, Flat, .31 Fender, 2-4, 2-49
Washer, Flat, .31 Hard, 2-7, 2-9, 2-13, 2-15, 2-19, 2-21, 2-27, 2-31, 2-49, 2-51, 2-53, 2-55, 2-57, 2-59, 2-63, 2-67, 3-15, 3-19
Washer, Flat, .31 Sae, 2-11, 2-17, 2-23, 2-25, 2-33, 2-39, 2-57, 3-11, 3-13
Washer, Flat, .38 Hard, 2-15, 2-19, 2-27, 2-47, 3-3
Washer, Flat, .38 Sae, 2-39, 2-43
Washer, Flat, .50 Hard, 2-11, 2-59, 3-5
Washer, Flat, .50 Sae, 2-35, 2-39, 2-43, 2-45, 2-47, 2-55, 3-14
Washer, Flat, .62 Sae, 2-33
Washer, Flat, #08, 2-69
Washer, Flat, #10, 2-13, 2-47, 3-13
Washer, Flat, 10, 3-11
Washer, Flat, M16, 17 X30X3Ss, 3-7
Washer, Flat, M16, 17 X30X3Ss, 2-61
Washer, Flat, 2-65
Washer, Lock, Int, .25, 2-15, 2-19
Washer, Lock, Int, #04, 2-13, 2-59
Washer, Lock, Int, #10, 3-13
Washer, Lock, Int-Ext, .25, 2-19
Washer, Lock, Int-Ext, .38, 2-19
Washer, Lock, 2-19, 2-65
Washer, Rubber, 2-15, 2-19
Washer, Thrust, 2-37
Washer, 2-37, 2-45, 2-51, 2-55, 2-69, 3-3, 3-15, 3-16, 4-3, 5-7, 5-9, 5-27
Wheel Assy, Rear, Solid Non Mk, 3-18
Wheel Assy, Rear, Solid, 2-45
Wheel, Bumper 3.0 Od, 2-7
Wheel, Bumper, 4 In Dia, 2-7
Wheel, Hopper, 2-67
Wheel, Steering, 2-11
Wire 1 Cp, 5-25
Wire 7 Cp (Lpg), 5-21
Wire Assy, Elect,Batt.Neg., 2-27
Wire Casing, 5-25
Woodruff Key, 5-7
Worklight Kit, 12V, 6100, 3-17

Y

York Assy, 5-25

We Need Your Help...

As part of Tennant's Zero Defects Program, we want to know about errors you have found or suggestions you may have regarding our machine manuals. If you find an error or have a suggestion, please complete this postage-paid form and mail it to us. Thank you for helping us make zero defects a way of life at Tennant.

Manual No. _____ Rev. No._____ Publish Date _____ Page _____

Machine _____ ❑ Report Error ❑ Suggestion

_____

_____

_____

_____

_____

_____

_____

_____

_____

_____

_____

_____

_____

Name _____ Date _____

Customer Number _____

Company _____

Address _____

City/State/Zip Code _____

Fold along dotted lines

Tape here

NO POSTAGE
NECESSARY
IF MAILED
IN THE
UNITED SATES

BUSINESS REPLY MAIL

FIRST CLASS MAIL PERMIT NO. 94 MINNEAPOLIS, MN

POSTAGE WILL BE PAID BY ADDRESSEE

TENNANT COMPANY
Technical Publications #15
701 North Lilac Drive
P.O. Box 1452
Minneapolis, MN 55440-9947

We Need Your Help...

As part of Tennant's Zero Defects Program, we want to know about errors you have found or suggestions you may have regarding our machine manuals. If you find an error or have a suggestion, please complete this postage-paid form and mail it to us. Thank you for helping us make zero defects a way of life at Tennant.

Manual No. _____ Rev. No._____ Publish Date _____ Page _____

Machine _____ ❑ Report Error ❑ Suggestion

_____

_____

_____

_____

_____

_____

_____

_____

_____

_____

_____

_____

_____

Name _____ Date _____

Customer Number _____

Company _____

Address _____

City/State/Zip Code _____

Fold along dotted lines

Tape here

NO POSTAGE
NECESSARY
IF MAILED
IN THE
UNITED SATES

BUSINESS REPLY MAIL

FIRST CLASS MAIL PERMIT NO. 94 MINNEAPOLIS, MN

POSTAGE WILL BE PAID BY ADDRESSEE

TENNANT COMPANY
Technical Publications #15
701 North Lilac Drive
P.O. Box 1452
Minneapolis, MN 55440-9947