800
(Gas/LPG)

(S/N 008467–)

Sweeper
Operator Manual

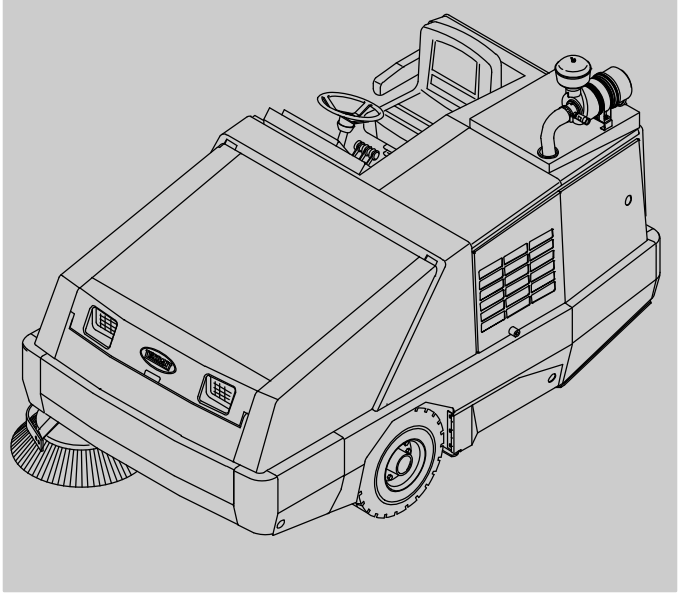

Tennant*True*® *Parts*

North America / International

For latest Parts manuals and other
Operator language manuals, visit:

www.tennantco.com/manuals

9016579
Rev. 01 (07-2019)

This manual is furnished with each new model. It provides necessary operation and maintenance instructions.

Read this manual completely and understand the machine before operating or servicing it.

This machine will provide excellent service. However, the best results will be obtained at minimum costs if:

- The machine is operated with reasonable care.
- The machine is maintained regularly - per the machine maintenance instructions provided.
- The machine is maintained with manufacturer supplied or equivalent parts.

PROTECT THE ENVIRONMENT

Please dispose of packaging materials, used components such as batteries and fluids in an environmentally safe way according to local waste disposal regulations.

Always remember to recycle.

MACHINE DATA

Please fill out at time of installation for future reference.

Model No. – _____

Serial No. – _____

Installation Date – _____

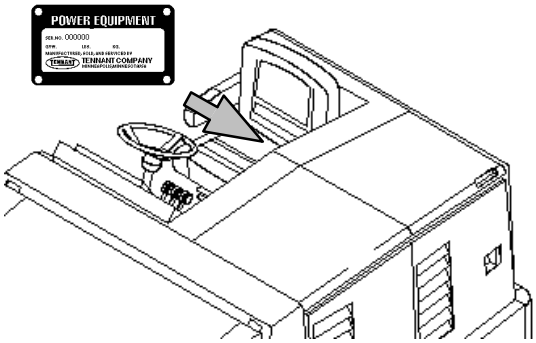

INTENDED USE

The 800 is an industrial rider machine designed to sweep hard surfaces (concrete, asphalt, stone, synthetic, etc). Typical applications include industrial warehouses, manufacturing facilities, distribution facilities, stadiums, arenas, convention centers, parking facilities, transportation terminals, and construction sites. Do not use this machine on soil, grass, artificial turf, or carpeted surfaces. This machine can be used both indoors and outdoors, but ensure there is adequate ventilation if used indoors. Do not use this machine other than described in this Operator Manual.

Tennant Company
PO Box 1452
Minneapolis, MN 55440
Phone: (800) 553–8033
www.tennantco.com

CALIFORNIA PROPOSITION 65 WARNING:

Engine exhaust from this product contains chemicals known to the State of California to cause cancer, birth defects, or other reproductive harm.

II Speed and Thermo Sentry are trademarks of the Tennant Company.

Specifications and parts are subject to change without notice.

Original instructions, Copyright © 2017, 2019 TENNANT Company, Printed in U.S.A.

CONTENTS

	Page
Safety Precautions	3
Operation	7
Machine Components	7
Control Panel Symbols	8
Controls And Instruments	10
Operation Of Controls	12
Directional Pedal	12
Brake Pedal	13
Parking Brake	13
Side Brush Switch	14
Side Brush Down Pressure Knob	14
Hopper Door Lever	15
Hopper Rollout Lever	16
Hopper Lift Lever	17
Horn Button	17
Charging System Light	18
Engine Oil Pressure Light	18
Engine Water Temperature Light	18
Hopper Temperature Light – Thermo Sentry	18
Main Brush Shut Down Light	19
Clogged Filter Light	19
Hopper Door Light (Option)	19
Fuel Level Gauge	20
Hourmeter	20
Hazard Light Switch (Option)	20
Operating Lights Switch	21
Filter Shaker Switch	21
Vacuum Fan Switch	21
Engine Speed Switch	22
Ignition Switch	23
Check Engine Light	23
Main Brush Switch	24
Steering Wheel	25
Steering Wheel Tilt Lever	25
Circuit Breakers	26
Fuses	27
Main Brush Down Pressure Knob	28
Latches	28
Operator Seat	29
Hopper Support Bar	29
Windshield Wiper Switch (Option)	30
Dome Light Switch (Option)	30
Heater Knob (Option)	30
Fan Speed Switch (Option)	31
Air Conditioning Switch (Option)	31
Air Control Vents (Option)	31
Brush Information	32
How The Machine Works	33
Pre-Operation Checklist	34
Changing An LPG Fuel Tank	35
Starting The Machine	36
While Operating The Machine	38
Sweeping	39
Stop Sweeping	41
Emptying The Hopper	42
Stop The Machine	44
Engaging Hopper Support Bar	46
Disengaging Hopper Support Bar	48
Options	50
Vacuum Wand	50
Regenerative Filter System (RFS)	54
Machine Troubleshooting	55
Maintenance	56
Maintenance Chart	56
Lubrication	59
Rear Wheel Support	59
Front Wheel Bearings	59
Side Brush Pivot Pins	59
Main Brush Adjustment	60
Hydraulics	60
Hydraulic Fluid Reservoir	60
Hydraulic Fluid	61
Hydraulic Hoses	62
Propelling Motor	62
Engine	63
Engine Oil	63
Cooling System	63
Air Filter Indicator	64
Air Filter	64
Fuel Filter (Gasoline)	66
Fuel Filter (LPG)	66
LPG Vaporizer	66
Engine Belt	67
PVC System	67
Spark Plugs	67
Camshaft And Balance Shaft Belts	68
Battery	68
Belts And Chains	69
Static Drag Chain	69
Air Conditioning Belt (Option)	69
Air Conditioning Filter (Option)	69
Debris Hopper	70
Hopper Dust Filter	70
To Remove Or Replace Hopper Dust Filter	70
Thermo Sentry	72
Brushes	72
Main Brush	72
To Replace Main Brush	72
To Check And Adjust Main Brush Pattern	73
Side Brush	76
To Replace Side Brush	76

Page
Skirts And Seals 77
Hopper Lip Skirts 77
Brush Compartment Skirts 77
Rear Skirts 77
Brush Door Seals 78
Hopper Seals 78
Hopper Door Seals 78
Hopper Side Skirt 79
Hopper Dust Seal 79
Hopper Cover Seal 79
Hopper Vacuum Fan Seal 79
Brakes And Tires 80
Service Brakes 80
Parking Brake 80
Tires 81
Front Wheel 81
Rear Wheel 81
Pushing, Towing, And Transporting
The Machine 82
Pushing Or Towing The Machine 82
Transporting The Machine 83
Machine Jacking 85
Storing Machine 85
Specifications 86
General Machine Performance 87
Power Type 87
Steering 87
Hydraulic System 88
Braking System 88
Tires 88
Machine Dimensions 89
Index 90

IMPORTANT SAFETY INSTRUCTIONS – SAVE THESE INSTRUCTIONS

The following precautions are used throughout this manual as indicated in their description:

WARNING: To warn of hazards or unsafe practices which could result in severe personal injury or death.

CAUTION: To warn of unsafe practices that could result in minor or moderate personal injury.

FOR SAFETY: To identify actions that must be followed for safe operation of equipment.

The following information signals potentially dangerous conditions to the operator. Know when these conditions can exist. Locate all safety devices on the machine. Report machine damage or faulty operation immediately.

WARNING: Machine emits toxic gases. Serious injury or death can result. Provide adequate ventilation.

WARNING: Raised hopper may fall. Engage hopper support bar.

WARNING: Lift arm pinch point. Stay clear of hopper lift arms.

WARNING: Moving belt and fan. Keep away.

WARNING: Burn hazard. Hot surface. Do NOT touch.

CAUTION: LPG engine will run for a few seconds after key is turned off. Apply parking brake before leaving machine.

This machine may be equipped with technology that automatically communicates over the cellular network. If this machine will be operated where cell phone use is restricted because of concerns related to equipment interference, please contact a Tennant representative for information on how to disable the cellular communication functionality.

FOR SAFETY:

1. **Do not operate machine:**
   - **Unless trained and authorized.**
   - **Unless operator manual is read and understood.**
   - **Under the influence of alcohol or drugs.**
   - **While using a cell phone or other types of electronic devices.**
   - **Unless mentally and physically capable of following machine instructions.**
   - **If it is not in proper operating condition.**
   - **Without filters in place or with clogged filters.**
   - **In dusty environments without the vacuum fan on.**
   - **Without dust bags or filters in place.**
   - **In areas where flammable vapors/liquids or combustible dusts are present.**
   - **In areas that are too dark to safely see the controls or operate the machine unless operating / headlights are turned on.**
   - **In areas with possible falling objects unless equipped with overhead guard.**

2. **Before starting machine:**
   - **Check machine for fluid leaks**
   - **Keep sparks and open flame away from refueling area.**
   - **Make sure all safety devices are in place and operate properly.**
   - **Check brakes and steering for proper operation.**
   - **Adjust seat and fasten seat belt (if equipped).**

3. **When starting machine:**
   - **Keep foot on brake and directional pedal in neutral.**

4. When using machine:
   - Use only as described in this manual.
   - Do not pick up burning or smoking debris, such as cigarettes, matches or hot ashes
   - Go slowly on inclines and slippery surfaces.
   - Do not sweep on ramp inclines that exceed 15% grade or transport (GVWR) on ramp inclines that exceed 15% grade.
   - Use brakes to stop machine.
   - Reduce speed when turning.
   - Keep all parts of body inside operator station while machine is moving.
   - Use care when reversing machine.
   - Move machine with care when hopper is raised.
   - Do not raise hopper when machine is on an incline.
   - Make sure adequate clearance is available before raising hopper.
   - Keep children and unauthorized persons away from machine.
   - Do not carry passengers on machine.
   - Always follow safety and traffic rules.
   - Report machine damage or faulty operation immediately.

5. Before leaving or servicing machine:
   - Do not park near combustible materials, dusts, gases, or liquids.
   - Stop on level surface.
   - Set parking brake.
   - Turn off machine and remove key.

6. When servicing machine:
   - All work must be done with sufficient lighting and visibility.
   - Avoid moving parts. Do not wear loose clothing, jewelry and secure long hair.
   - Block machine tires before jacking machine up.
   - Jack machine up at designated locations only. Support machine with jack stands.
   - Use hoist or jack that will support the weight of the machine.
   - Do not push or tow the machine without an operator in the seat controlling the machine..
   - Do not power spray or hose off machine near electrical components.
   - Disconnect battery connections before working on machine.
   - Avoid contact with battery acid.
   - Avoid contact with hot engine coolant.
   - Do not remove cap from radiator when engine is hot.
   - Allow engine to cool.
   - Keep flames and sparks away from fuel system service area. Keep area well ventilated.
   - Use cardboard to locate leaking hydraulic fluid under pressure.
   - All repairs must be performed by a trained service mechanic.
   - Do not modify the machine from its original design.
   - Use Tennant supplied or approved replacement parts.
   - Wear personal protective equipment as needed and where recommended in this manual.

For Safety: wear hearing protection.

For Safety: wear protective gloves.

For Safety: wear eye protection.

For Safety: wear protective dust mask.

7. When loading/unloading machine onto/off truck or trailer:
   - Empty debris hopper before loading machine.
   - Use ramp, truck or trailer that will support the weight of the machine and operator.
   - Do not load/unload on ramp inclines that exceed 27% grade.
   - Use winch. Do not drive the machine onto/off the truck or trailer unless the load height is 380 mm (15 in) or less from the ground.
   - Turn off machine and remove key.
   - Set parking brake after machine is loaded.
   - Block machine tires.
   - Tie machine down to truck or trailer.

The safety labels appear on the machine in the locations indicated. Replace damaged labels.

WARNING LABEL – Machine emits toxic gases. Serious injury or death can result. Provide adequate ventilation.

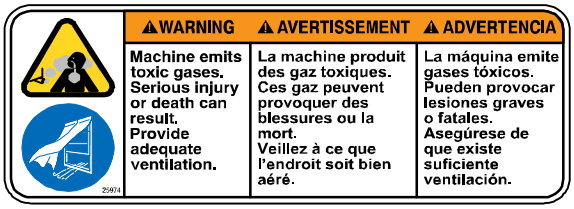

Located on front panel of operator compartment.

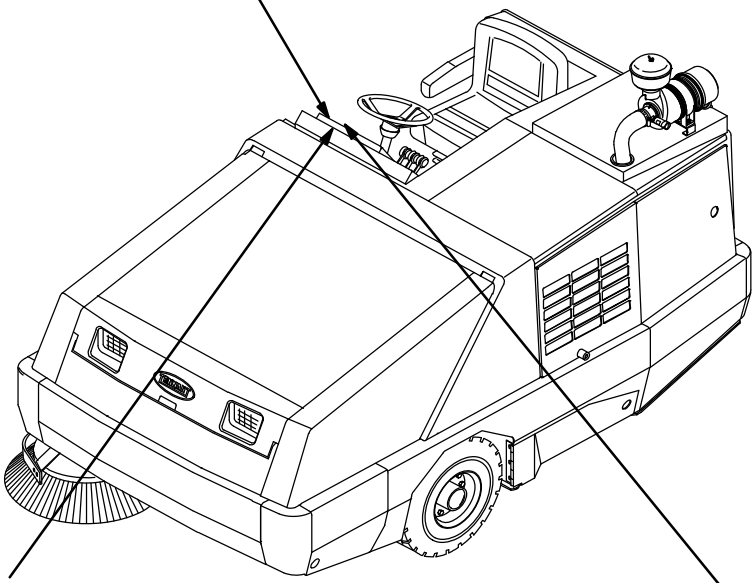

FOR SAFETY LABEL – Read manual before operating machine.

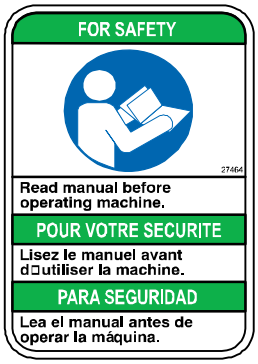

Located on front panel of operator compartment.

LPG ENGINE LABEL – LPG engine will run for a few seconds after key is turned off. Apply parking brake before leaving machine. (LPG machines only)

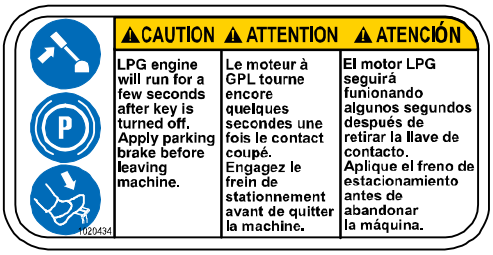

Located on front panel of operator compartment.

WARNING LABEL – Lift arm pinch point. Stay clear of hopper lift arms.

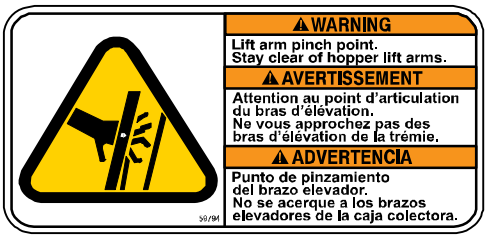

Located on both hopper lift arms.

WARNING LABEL – Moving belt and fan. Stay away.

Located on alternator belt guard, engine top cover, top cover support, and air conditioner belt guard (if machine has air conditioner option).

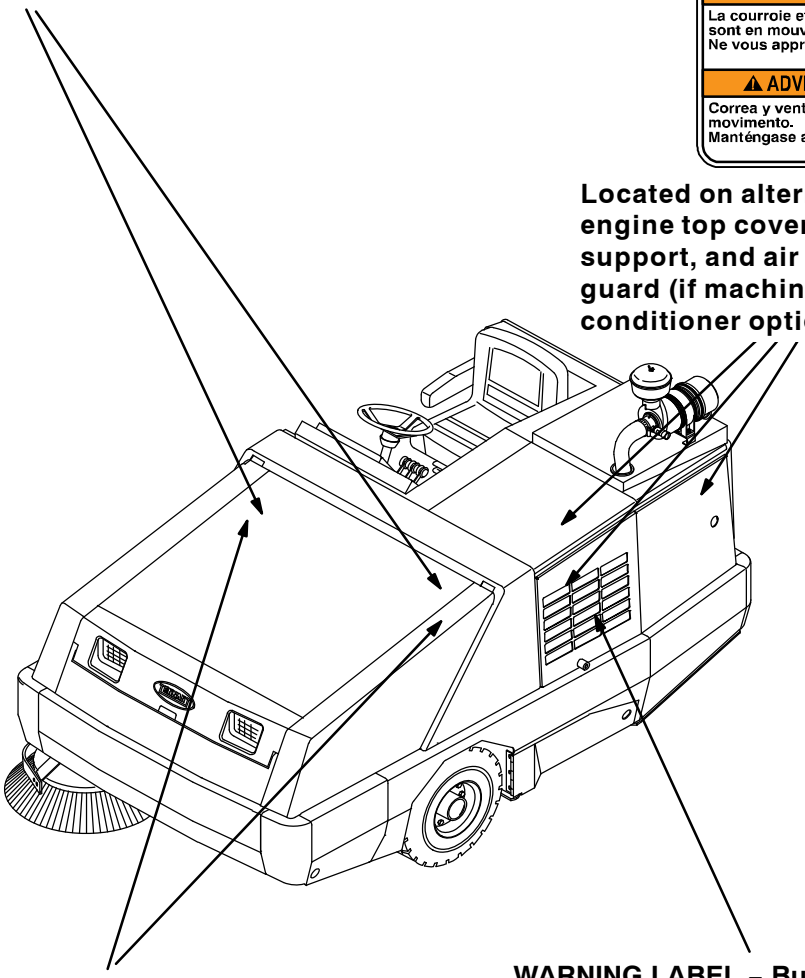

WARNING LABEL – Raised hopper may fall. Engage hopper support bar.

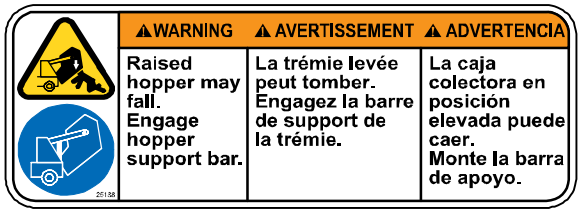

Located on hopper lift arms cross-tube and on both hopper lift arms.

WARNING LABEL – Burn hazard. Hot surface. Do NOT touch.

Located on engine side guard.

OPERATION

MACHINE COMPONENTS

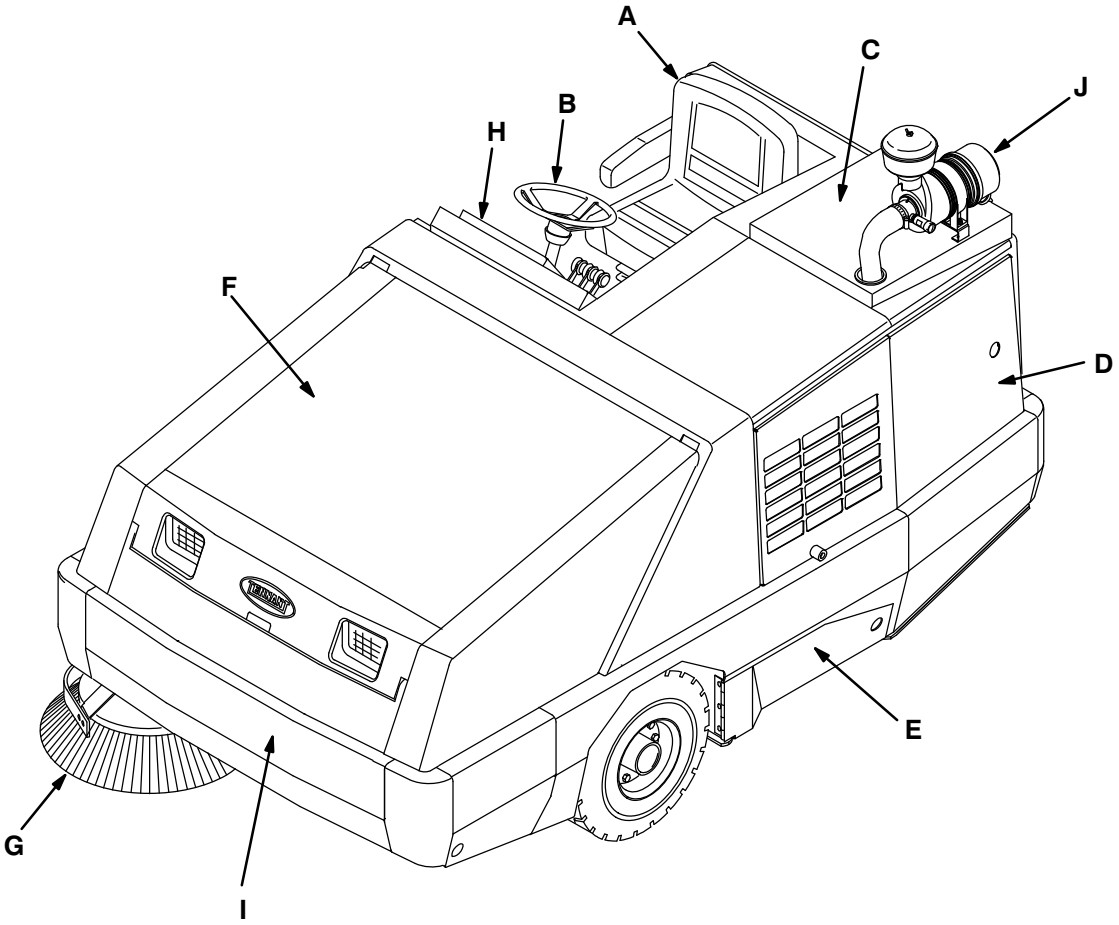

07623

A. Operator Seat
B. Steering Wheel
C. Engine Cover
D. Engine Side Door
E. Main Brush Access Door
F. Hopper Cover
G. Side Brush
H. Instrument Panel
I. Hopper Door
J. Air Filter Assembly

CONTROL PANEL SYMBOLS

These symbols identify controls and displays on the machine:

- Side Brush Down Pressure Light
- Side Brush Down Pressure Heavy
- Side Brush Down and On
- Side Brush Up and Off
- Hopper Door Close
- Hopper Door Open
- Hopper Roll In
- Hopper Roll Out
- Hopper Down
- Hopper Up
- Horn
- Charging System
- Engine Oil Pressure
- Engine Water Temperature
- Hopper Temperature – Thermo Sentry™
- Main Brush Shut Down
- Filter Clogged
- Hopper Door Closed
- Fuel
- Hourmeter
- Hazard Light
- Operating Lights
- Fan
- Engine Speed
- Steering Wheel Tilt
- Main Brush Down and II Speed™
- Main Brush Off
- Main Brush Down and Normal Speed

Main Brush Down Pressure Light

Main Brush Down Pressure Heavy

Circuit Breaker 1

Circuit Breaker 2

Circuit Breaker 3

Circuit Breaker 4

Circuit Breaker 5

Unleaded fuel only

Circuit Breaker 6

Circuit Breaker 7

Circuit Breaker 8

Circuit Breaker 9

Parking Brake

Hydraulic Filter Clogged

Check Engine

CONTROLS AND INSTRUMENTS

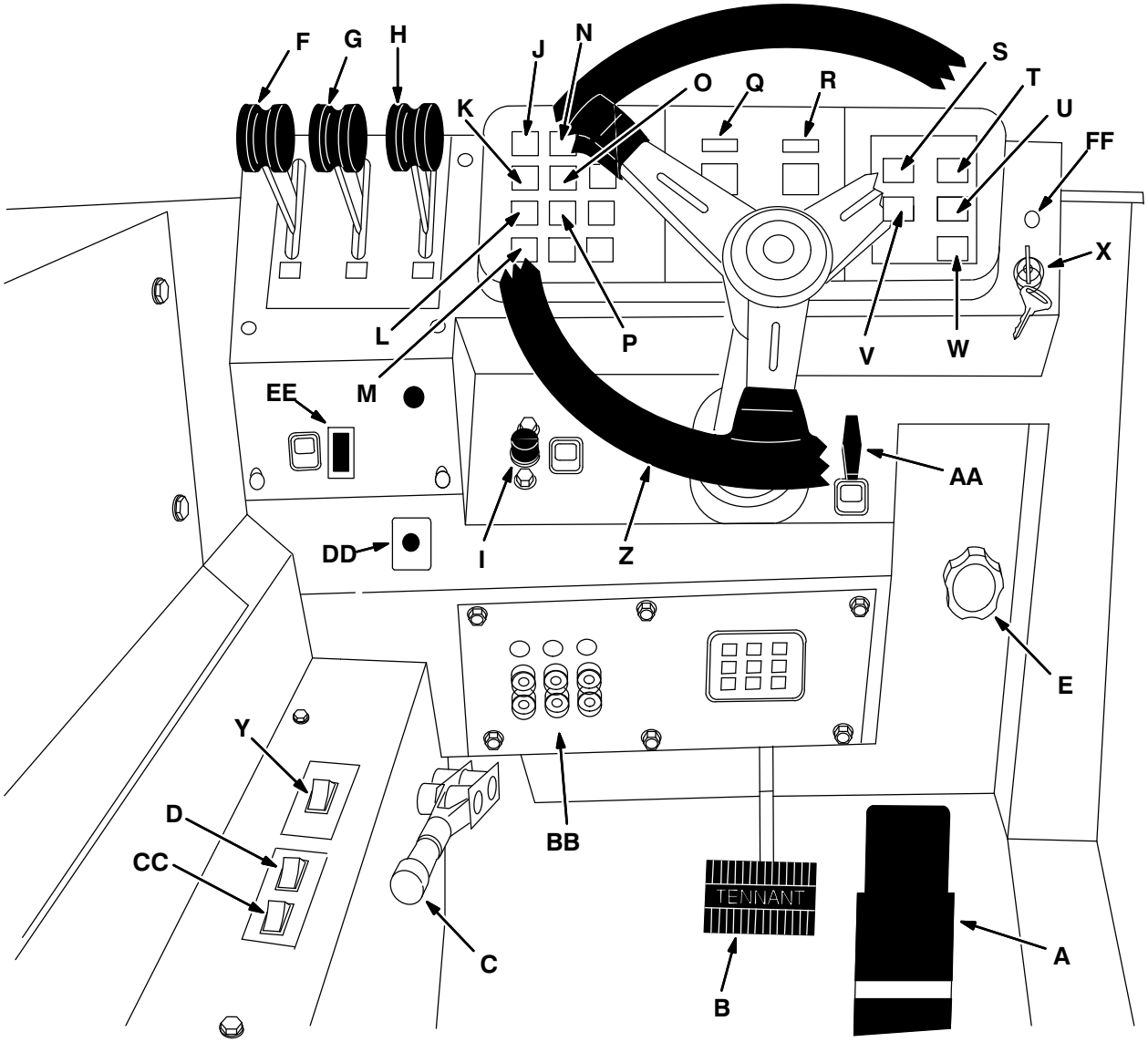

351083

A. Directional Pedal
B. Brake Pedal
C. Parking Brake Lever
D. Side Brush Switch
E. Side Brush Down Pressure Knob
F. Hopper Door Lever
G. Hopper Rollout Lever
H. Hopper Lift Lever
I. Horn Button
J. Charging System Light
K. Engine Oil Pressure Light
L. Engine Water Temperature Light
M. Hopper Temperature Light – Thermo Sentry™
N. Main Brush Shut Down Light
O. Clogged Filter Light
P. Hopper Door Light (Option)
Q. Fuel Level Gauge
R. Hourmeter
S. Hazard Light Switch (Option)
T. Operating Light Switch
U. Filter Shaker Switch
V. Vacuum Fan Switch
W. Engine Speed Switch
X. Ignition Switch
Y. Main Brush Switch
Z. Steering Wheel
AA. Steering Column Tilt Lever
BB. Circuit Breakers
CC. Side Brush Switch, Left (Option)
DD. Heater Cable (Option)
EE. Clogged Hydraulic Filter Light
FF. Check Engine Light

OPERATION OF CONTROLS

DIRECTIONAL PEDAL

The directional pedal controls direction of travel and the propelling speed of the machine. You change the speed of the machine with the pressure of your foot; the harder you press the faster the machine travels.

Forward: Press the top of the directional pedal with the toe of your foot.

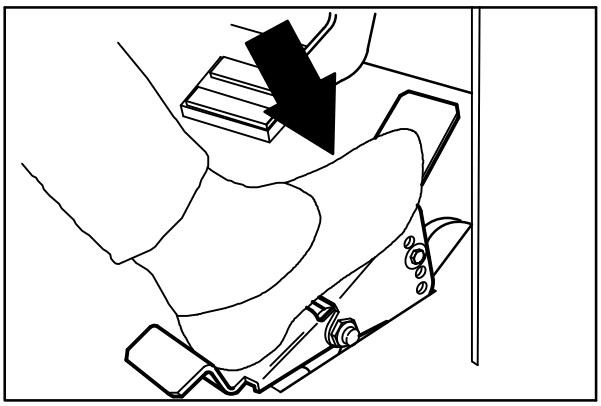

08467

Reverse: Press the bottom of the directional pedal with the heel of your foot.

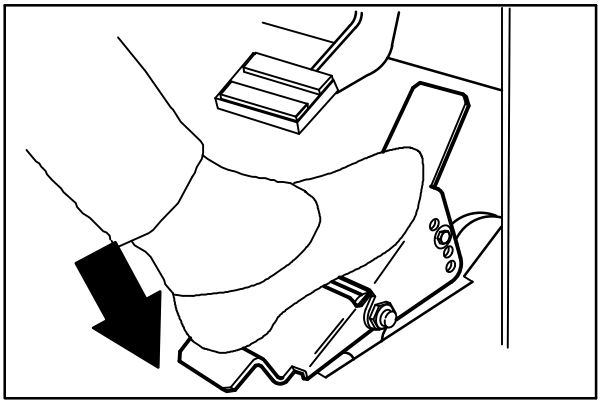

08468

Neutral: Take your foot off the directional pedal and it will return to the neutral position.

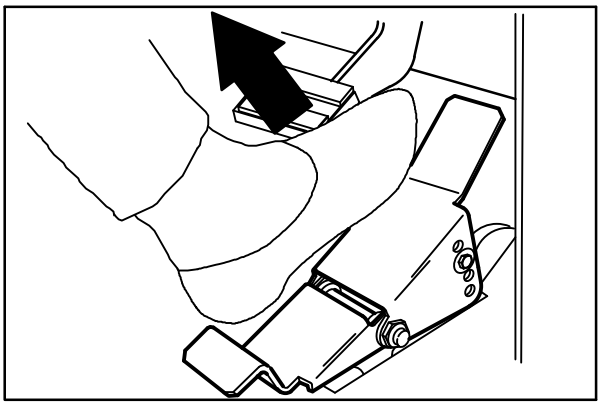

08469

The toe angle of the directional pedal is adjustable. Remove the clevis pin, move the top of the pedal to the angle needed, and put the clevis pin through the adjustment holes.

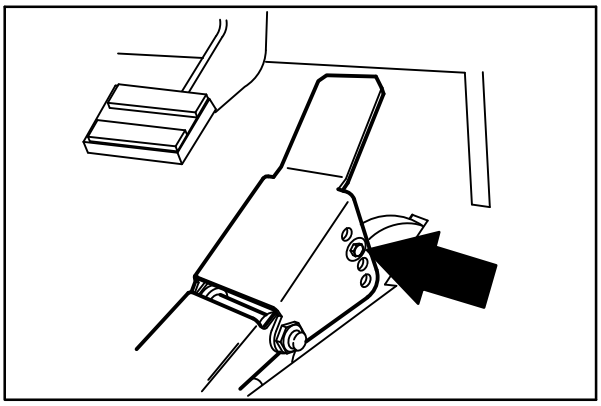

08470

BRAKE PEDAL

The brake pedal stops the machine.

Stop: Take your foot off the directional pedal and let it return to the neutral position. Step on the brake pedal.

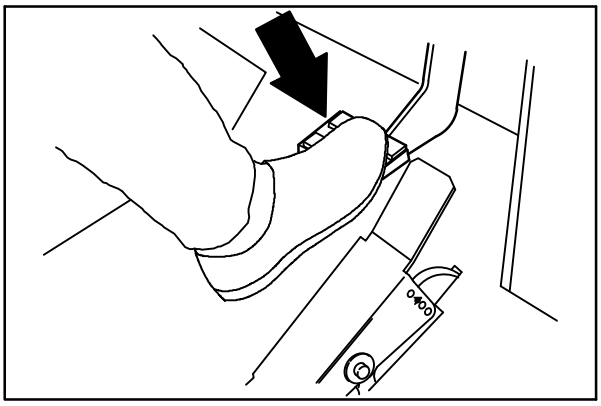

08471

PARKING BRAKE

The parking brake lever sets and releases the front wheel brakes.

Set: Pull the parking brake lever up.

FOR SAFETY: Before leaving or servicing machine; stop on level surface, set parking brake, turn off machine and remove key.

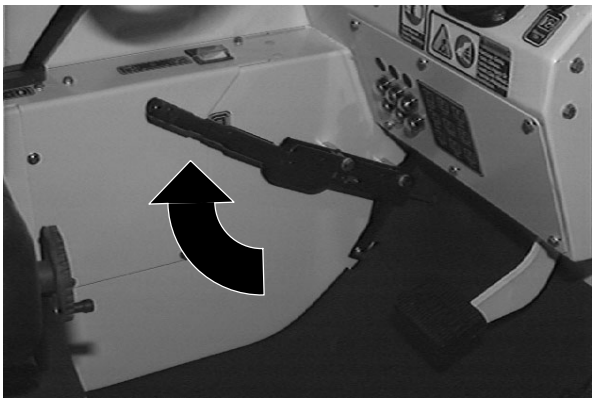

Release: Push the parking brake lever down.

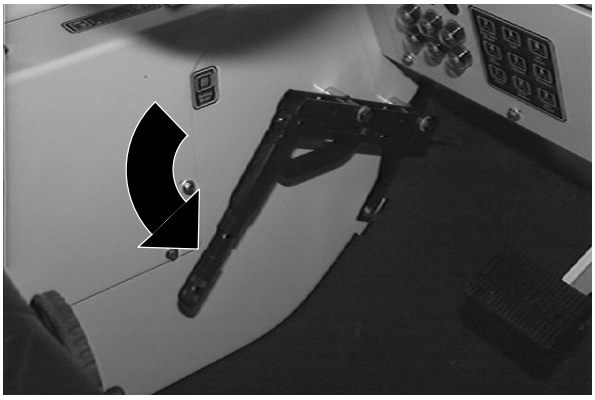

SIDE BRUSH SWITCH

The right side brush switch controls the right side brush position and rotation. The optional left side brush switch controls the optional left side brush position and rotation.

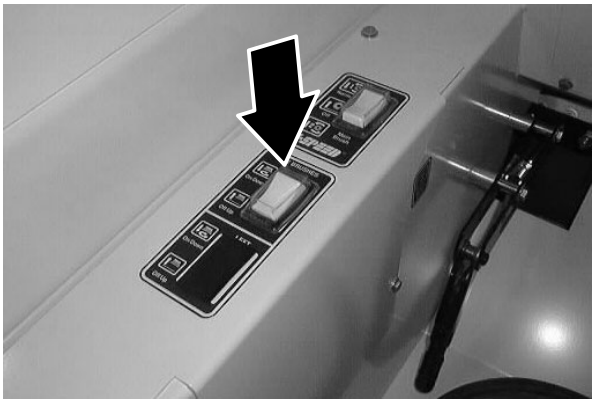

Down and On: Press the top of the switch into the **On**/**Down** position.

Up and Off: Press the bottom of the switch into the **Off**/**Up** position.

SIDE BRUSH DOWN PRESSURE KNOB

The side brush down pressure knob changes the side brush contact with the sweeping surface.

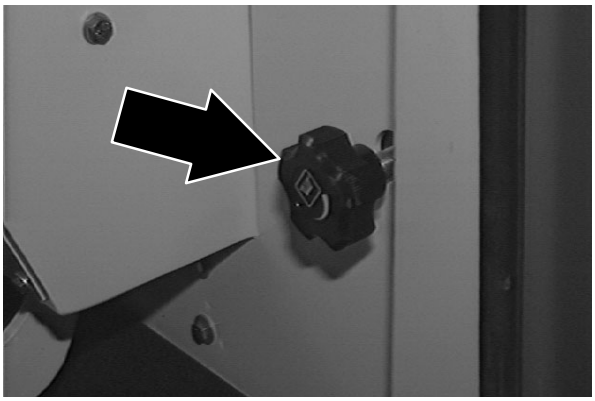

Increase Pressure: Turn the side brush down pressure knob counter-clockwise.

Decrease Pressure: Turn the side brush down pressure knob clockwise.

HOPPER DOOR LEVER

The hopper door lever opens and closes the hopper door. Close the hopper door when emptying the hopper to control debris and dust.

Open: Pull and hold the hopper door lever in the **Open** position.

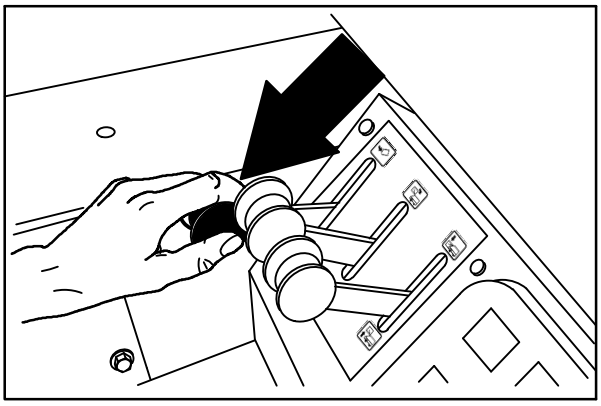

08474

Hold: Release the hopper door lever into the middle position.

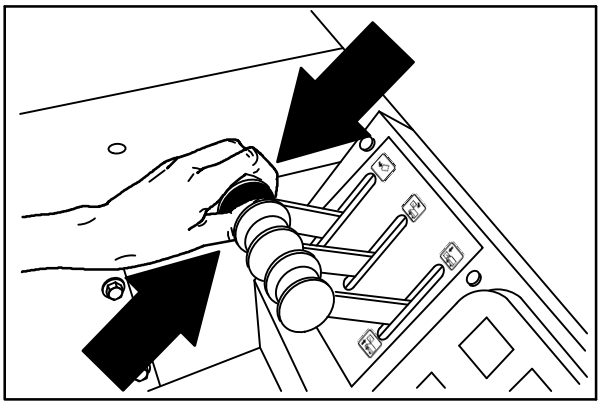

08475

Close: Push and hold the hopper door lever in the **Close** position.

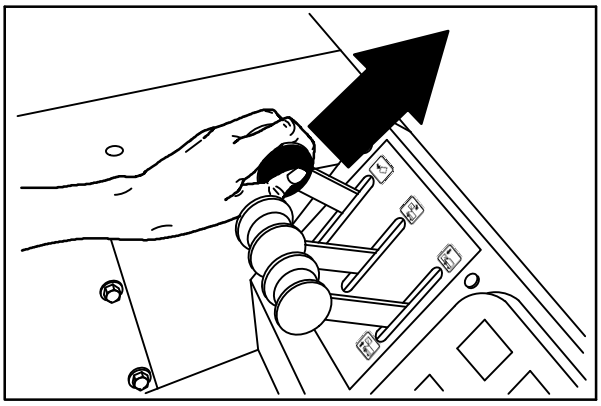

08476

HOPPER ROLLOUT LEVER

The hopper rollout lever moves the hopper in and out.

Out: Pull and hold the hopper rollout lever in the **Out** position.

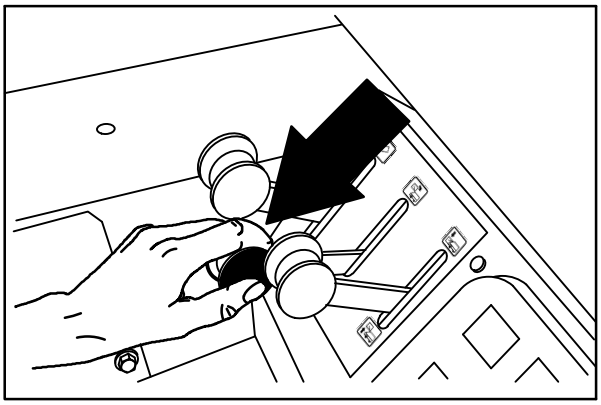

08477

Hold: Release the hopper rollout lever into the middle position.

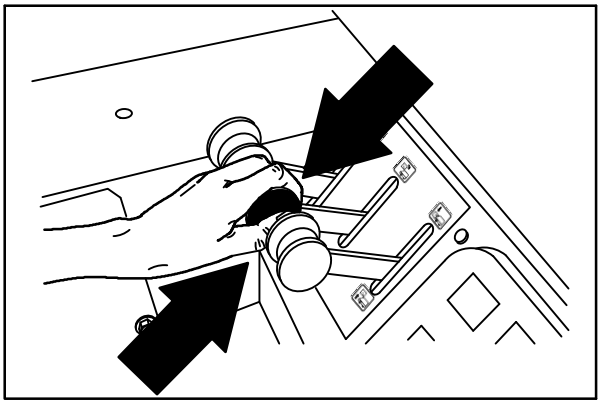

08478

In: Push and hold the hopper rollout lever in the **In** position.

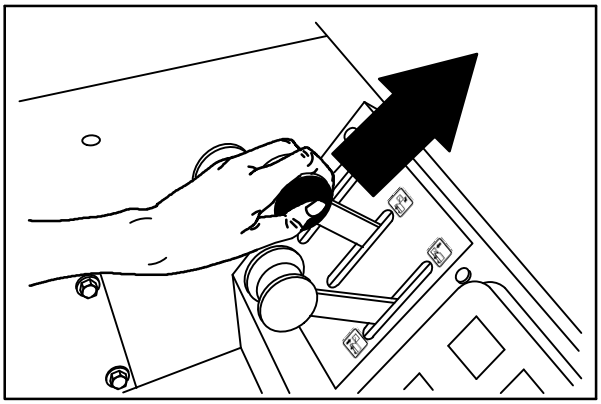

08479

HOPPER LIFT LEVER

The hopper lift lever raises and lowers the hopper.

Raise: Pull and hold the hopper lift lever in the **Up** position.

WARNING: Raised hopper may fall. Engage hopper support bar.

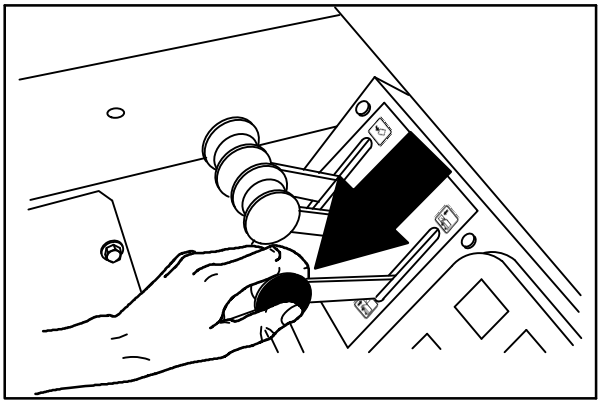

08480

Hold: Release the hopper lift lever up and into the middle position.

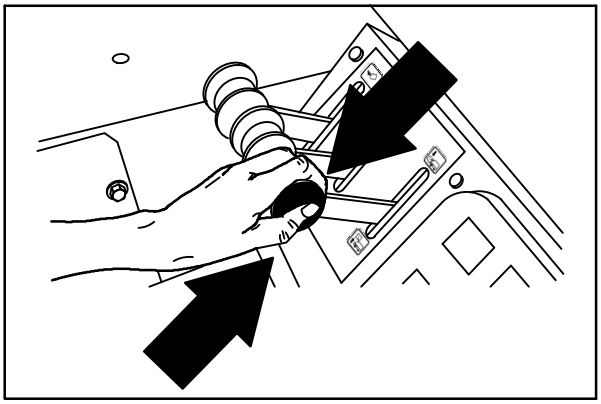

08481

Lower: Push and hold the hopper lift lever in the **Down** position.

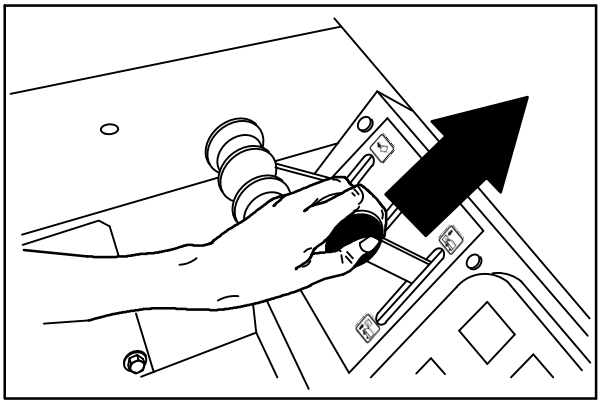

08482

HORN BUTTON

The horn button operates the horn.

Sound: Press the button.

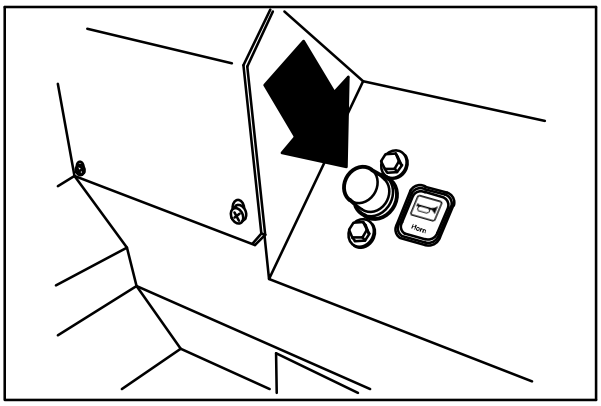

08438

CHARGING SYSTEM LIGHT

The charging system light comes on when the existing voltage potential of the battery is not within normal range (10 to 14 Volts). Stop operating the machine. Locate the problem and have it corrected.

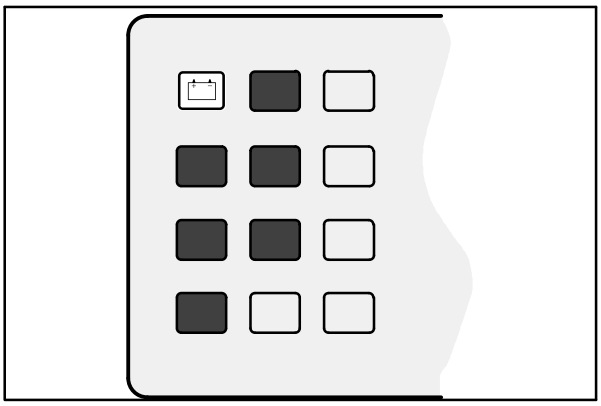

07757

ENGINE OIL PRESSURE LIGHT

The engine oil pressure light comes on when the engine oil pressure falls below 40 kPa (5 psi). Stop operating the machine if the oil pressure gets this low. The engine will automatically stop if the oil pressure gets this low. The engine can be restarted and operated for 30 seconds after this happens. Locate the problem and have it corrected.

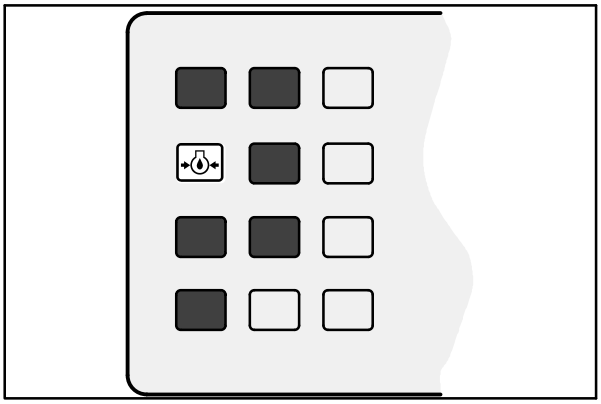

07758

ENGINE WATER TEMPERATURE LIGHT

The engine water temperature light comes on when the temperature of the engine coolant is more than 107° C (225° F). Stop operating the machine if if the water temperature gets this high. The engine will automatically stop when the temperature gets too high, then the light will come on. Locate the problem and have it corrected.

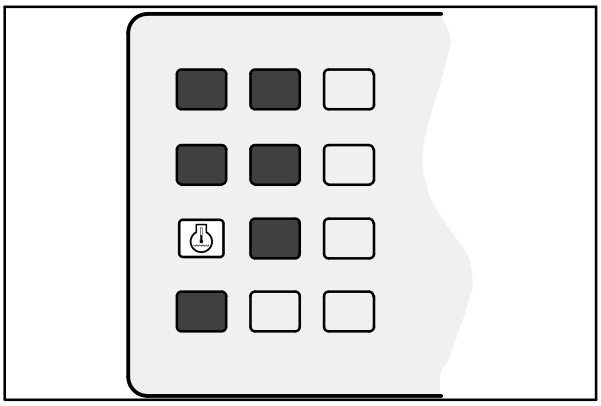

07759

HOPPER TEMPERATURE LIGHT – THERMO SENTRY

The hopper temperature light comes on when there is too much heat in the hopper, possibly from a fire. The Thermo Sentry will stop the vacuum fan.

The Thermo Sentry has to be reset manually, see *THERMO SENTRY* in *MAINTENANCE.*

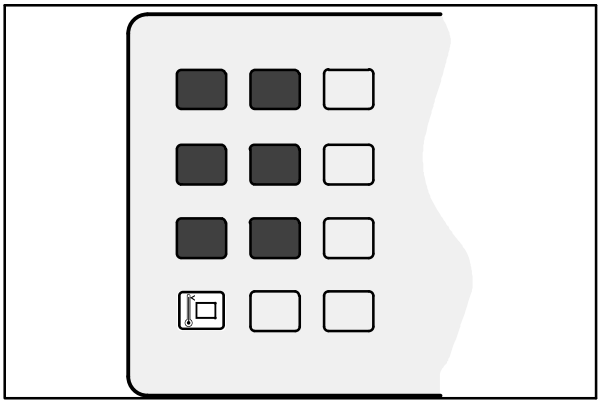

07760

MAIN BRUSH SHUT DOWN LIGHT

The main brush shut down light comes on when there is excessive down pressure for the main brush, or there is a problem with the main and side brush hydraulic motor circuit. The brush pressures can be reduced with the main brush and side brush pressure knobs.

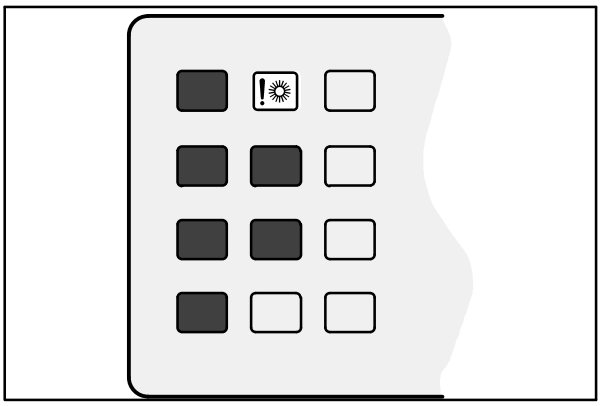

07761

CLOGGED FILTER LIGHT

The clogged filter light comes on when the hopper dust filter is clogged. If the machine is equipped with a Regenerative Filter System (RFS) option, the light will remain on for a few seconds each time the RFS cycles.

To clean the filter, press the filter shaker switch. If the clogged filter light remains lit, manually clean the hopper dust filter. See *HOPPER DUST FILTER* in *MAINTENANCE.*

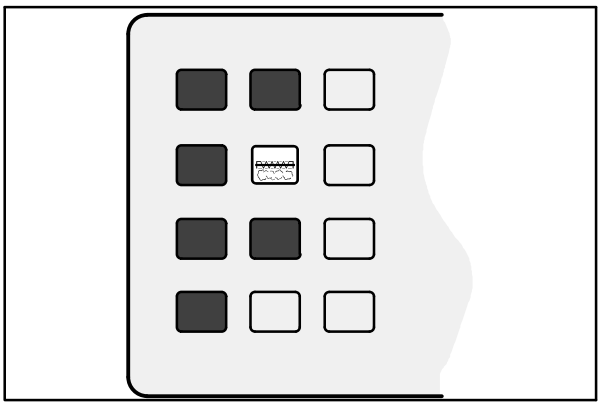

07762

HOPPER DOOR LIGHT (OPTION)

The hopper door light comes on when the hopper door is open. Make sure the hopper door is closed and the hopper door light is off, before sweeping with the machine.

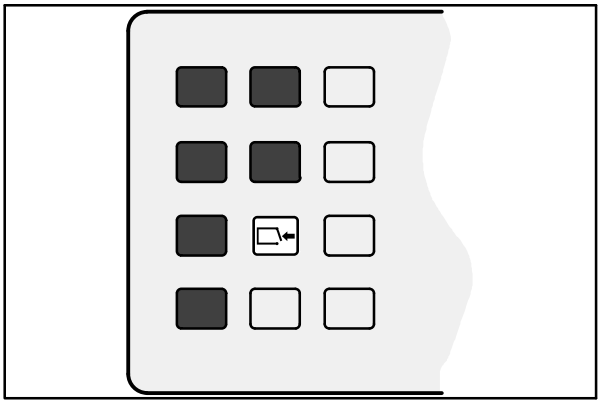

07763

FUEL LEVEL GAUGE

The fuel level gauge indicates how much fuel is in the fuel tank with a segmented LED light.

Gasoline powered machine: When the tank is full, all ten of the segments are lit. As the fuel tank empties, the segments shut off. The fuel tank is empty when all ten of the segments have shut off.

NOTE: Do not use leaded fuels. The use of leaded fuels will cause permanent damage to the system's oxygen sensor and the catalytic converter.

LPG powered machine: When the tank is full, none of the segments are lit. The last two segments will flash when the tank is low on fuel or empty.

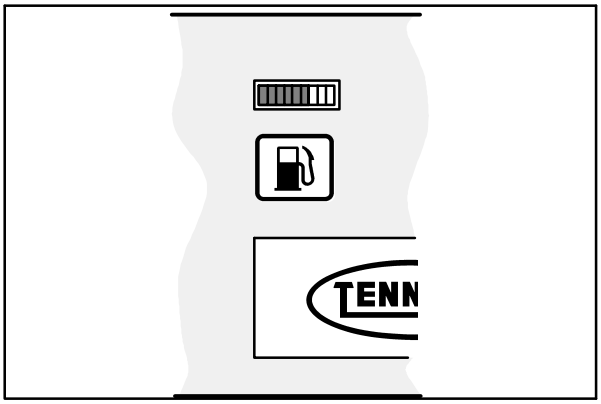

07764

HOURMETER

The hourmeter records the number of hours the machine has been operated. Use this information to determine machine maintenance intervals.

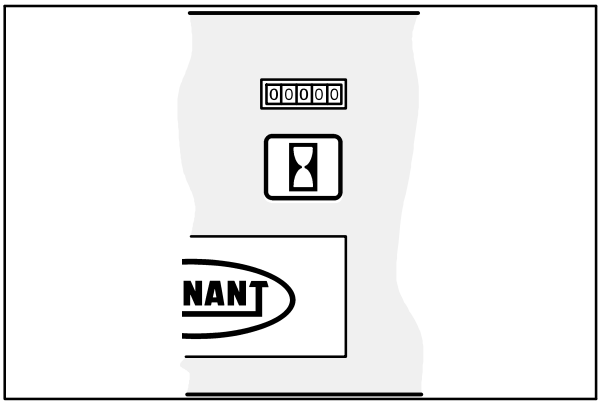

07765

HAZARD LIGHT SWITCH (OPTION)

The hazard light switch powers on and off the hazard light.

On: Press the hazard light switch. The indicator light above the switch will come on.

Off: Press the hazard light switch. The indicator light above the switch will go off.

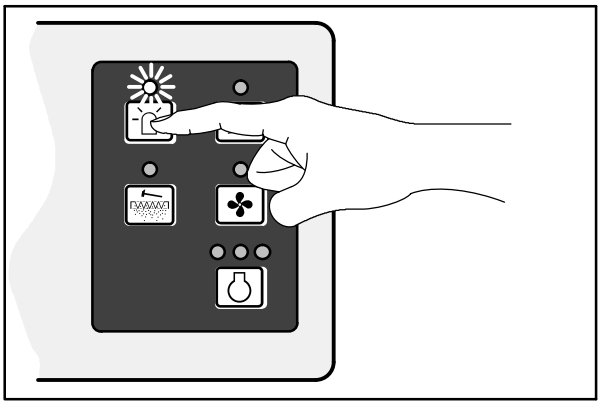

07766

OPERATING LIGHTS SWITCH

The operating lights switch powers on and off the headlights and taillights.

On: Press the operating lights switch. The indicator light above the switch will come on.

Off: Press the operating lights switch. The indicator light above the switch will go off.

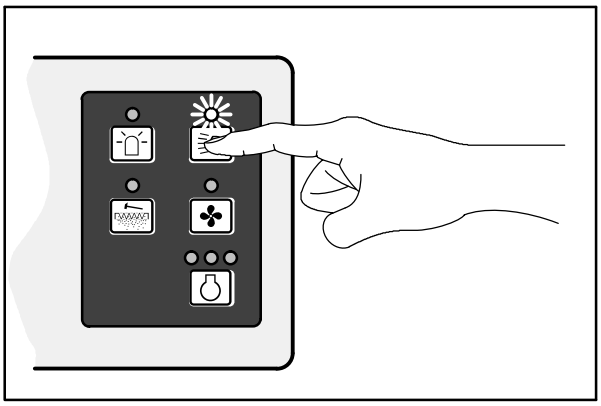

07768

FILTER SHAKER SWITCH

The filter shaker switch starts the hopper dust filter shaker. The shaker automatically operates for 40 seconds.

Start: Press the filter shaker switch. The indicator light will remain on while the filter shaker is operating.

Stop: Press the filter shaker switch again ***IF*** wanting to stop the filter shaker during the 40 second shaking cycle.

NOTE: The vacuum fan shuts off while the filter shaker is operating.

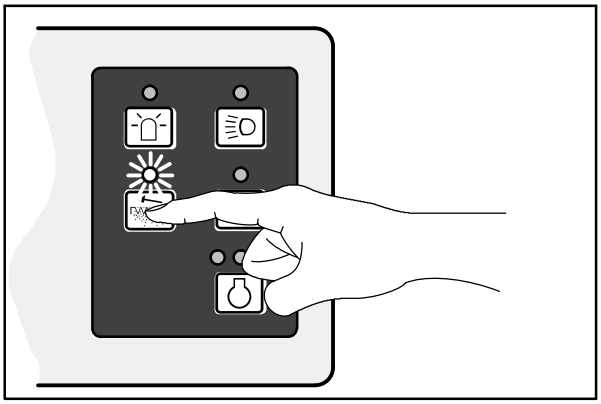

07767

VACUUM FAN SWITCH

The vacuum fan switch starts and stops the vacuum fan.

Start: Press the vacuum fan switch. The indicator light above the switch will come on.

Stop: Press the vacuum fan switch. The indicator light above the switch will go off.

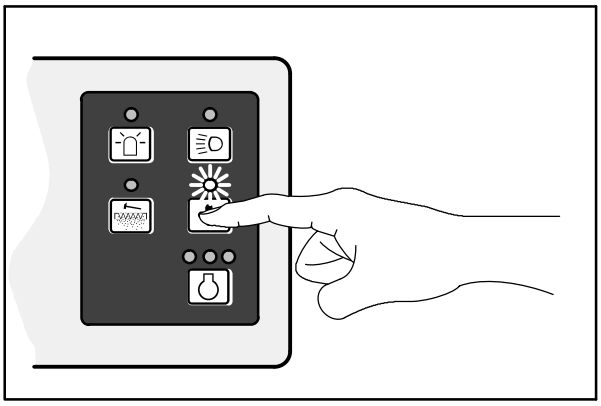

07769

ENGINE SPEED SWITCH

The engine speed switch controls engine governed speed. The three indicator lights above the switch show the engine speed; Start, Idle, or Fast.

Start: The engine will automatically start in the Start speed.

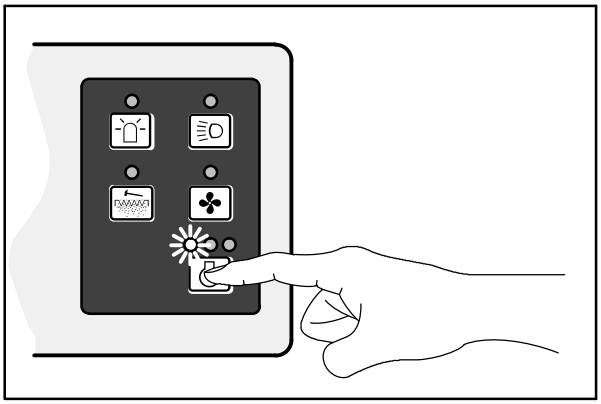

07770

Idle: Press the engine speed switch until the second indicator light comes on. This speed is for idling.

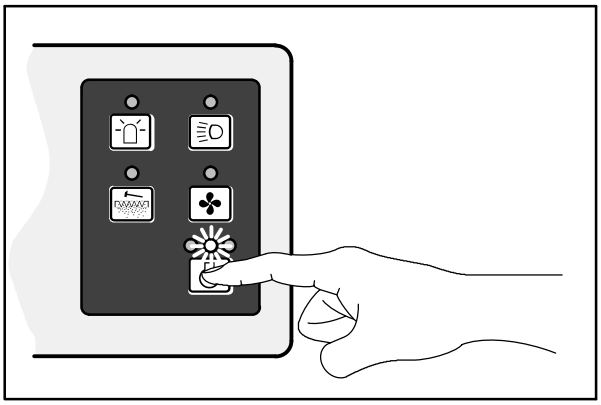

07771

Fast: Press the engine speed switch until the third indicator light comes on. This speed is for sweeping.

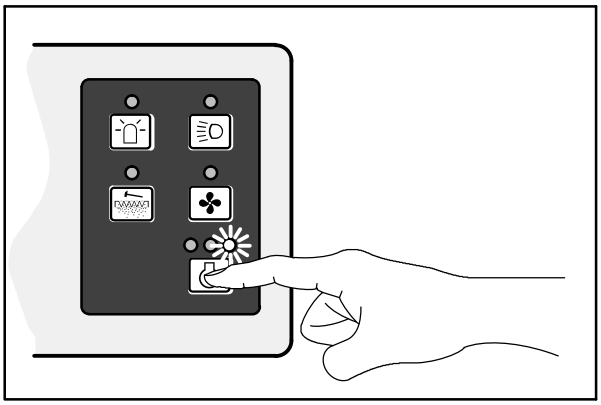

07772

IGNITION SWITCH

The ignition switch starts and stops the engine with a key.

Start: Turn the key all the way clockwise. Release the key as soon as the engine starts.

NOTE: When restarting engine, you must wait 15–20 seconds before the starter motor will engage again.

Stop: Turn the key counter-clockwise.

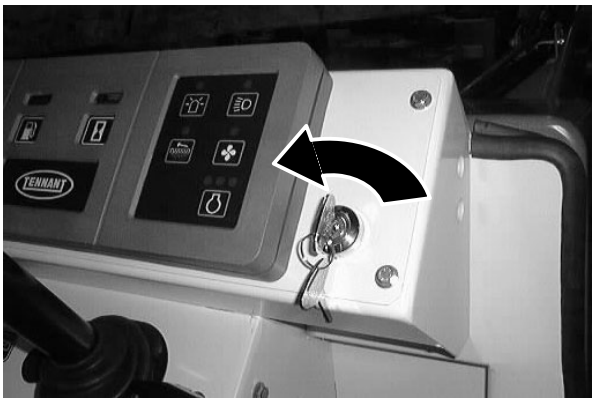

NOTE: To protect the engine's emission components on the LPG powered machines, the engine will continue to operate for a few seconds after the ignition switch is turned off.

CAUTION: LPG engine will run for a few seconds after key is turned off. Apply parking brake before leaving machine.

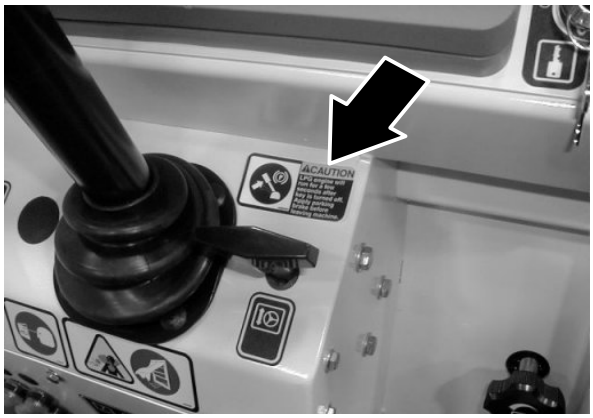

CHECK ENGINE LIGHT

The check engine light comes on if the engine control system detects a fault during machine operation.

If the check engine light comes on while operating the machine, contact a TENNANT service representative.

MAIN BRUSH SWITCH

The main brush switch controls the main brush position and rotation.

Main Brush Down and Normal Speed: Press the front **Normal** position of the switch.

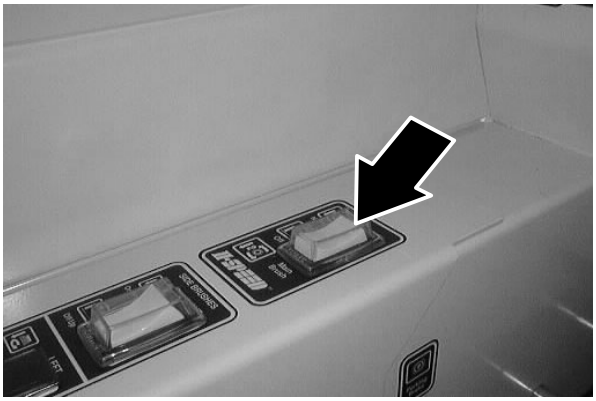

Main Brush Up and Off: Place the switch in the middle **Off** position.

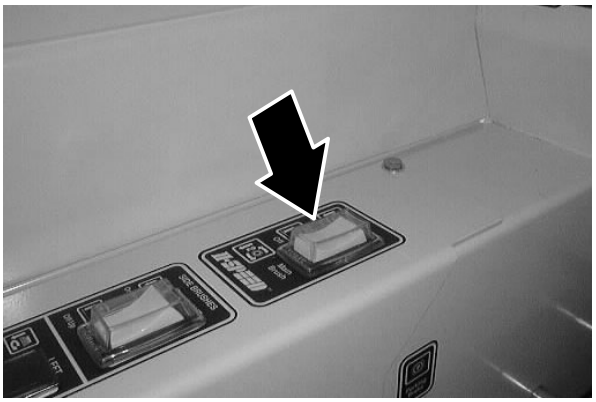

Main Brush Down and II Speed: Press the rear **II Speed** position of the switch.

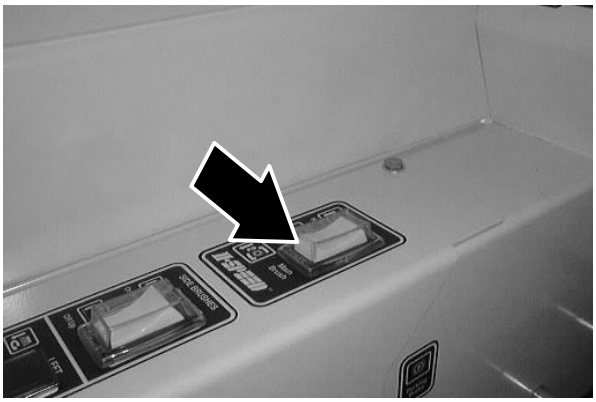

Main Brush Switch.

NOTE: On earlier versions of the machine, the main brush switch was located by the ignition switch.

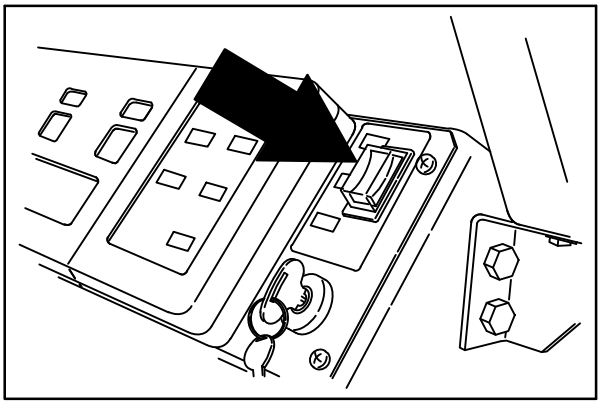

08464

STEERING WHEEL

The steering wheel controls the machine's direction. The machine is very responsive to the steering wheel movements.

Left: Turn the steering wheel to the left.

Right: Turn the steering wheel to the right.

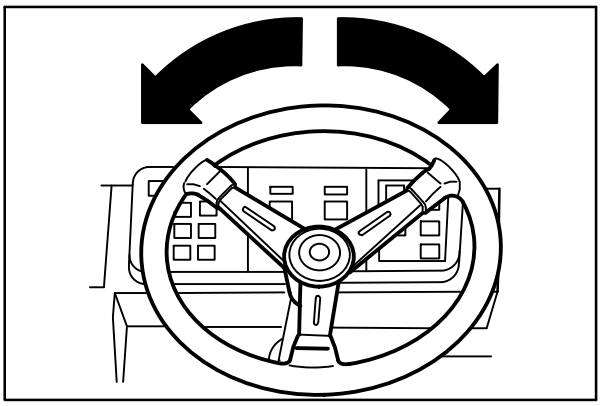

08484

STEERING WHEEL TILT LEVER

The steering wheel tilt lever controls the angle of the steering wheel.

Adjust: Pull out the tilt lever, move the wheel up or down, and release the tilt lever.

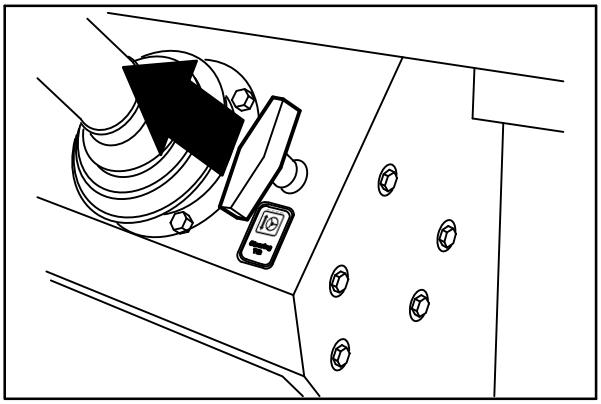

08439

CIRCUIT BREAKERS

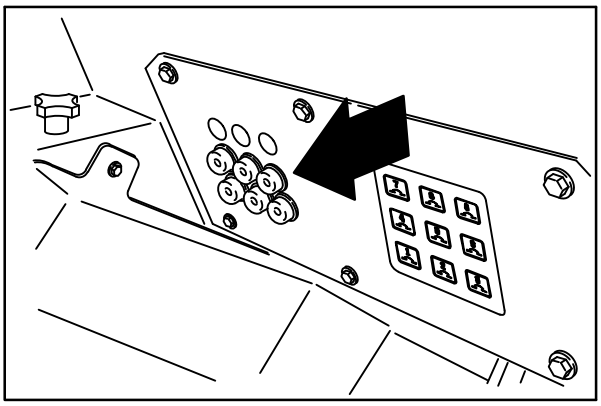

The circuit breakers are resettable electrical circuit protection devices. Their design stops the flow of current in the event of a circuit overload. Once a circuit breaker is tripped, it must be reset manually. Press the reset button after the breaker has cooled down.

If the overload that caused the circuit breaker to trip is still there, the circuit breaker will continue to stop current flow until the problem is corrected.

All but two of the circuit breakers are located in the operator compartment. There are two 30 Amp circuit breakers located behind the circuit breaker panel that can be accessed by raising the hopper. The 30 Amp circuit breakers are self–resetting: they will reset themselves, after cooling down, after being tripped.

The chart lists the circuit breakers and the electrical components they protect.

Circuit Breaker	Rating	Circuit Protected
CB–1	15 A	Horn
CB–2	15 A	Filter shaker
CB–3	15 A	Instrument panel
CB–4	15 A	Instrument panel
CB–5	15 A	Hazard light
CB–6	2.5 A	Brushes
CB–7	15 A	Auxiliary side brush option
CB–8	15 A	Cab accessories
CB–9	15 A	Air conditioner
CB–10	30 A	AC compressor/blower
CB–11	30 A	AC condenser/fans

FUSES

The *fuses* are one-time protection devices designed to stop the flow of current in the event of a circuit overload.

NOTE: Always replace the fuse with a fuse of the same amperage.

The *engine harness fuses* are located near the engine under the engine cover. Access the fuses by opening the engine cover.

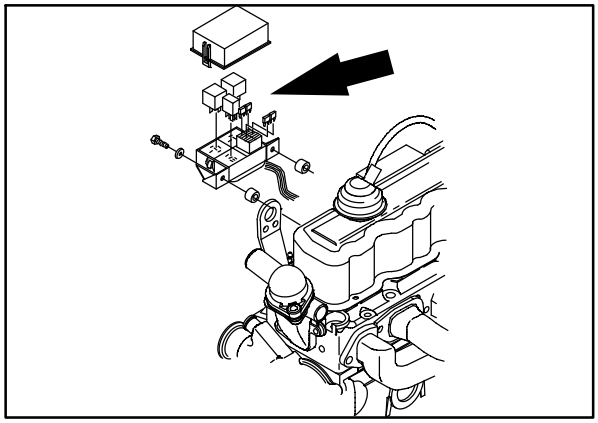

Engine Harness Fuses		
Fuse	**Rating**	**Circuit Protected**
FU-1	5 A	VSW
FU-2	20 A	ECM
FU-3	10 A	Fuel pump (Gasoline)
FU-4	20 A	Ignition
FU–5	5 A	DEPR (LPG)
FU–6	25 A	Starter
FU–7	70 A	Alternator

MAIN BRUSH DOWN PRESSURE KNOB

The main brush down pressure knob changes the main brush contact with the sweeping surface.

Increase Pressure: Turn the main brush down pressure knob counter-clockwise.

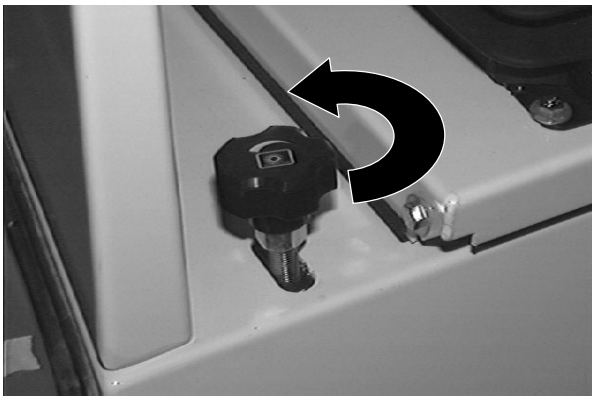

Decrease Pressure: Turn the main brush down pressure knob clockwise.

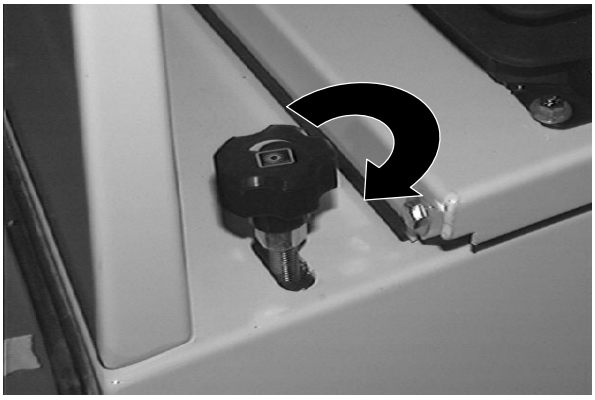

LATCHES

The side doors, rear door, engine cover, and hopper cover are secured with latches.

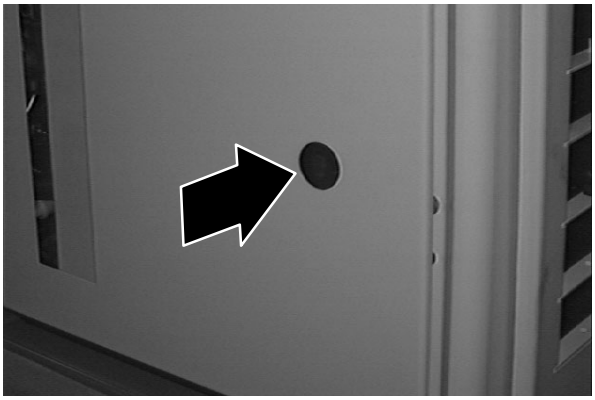

Open the Main Brush Side Doors: Pull up on the door latch.

Open the Engine Side Door: Pull up on the door latch.

Open the Rear Door: Push the latch to the left.

Open the Engine Cover: Push in on the cover latch.

Open the Hopper Cover: Push the latch to the right.

Open Rear Bumper Door: Push the latch to the left.

OPERATOR SEAT

The operator seat has two adjustments. The adjustments are for the front to rear seat position and ride stiffness.

The seat front-to-rear position is adjusted by the seat position lever.

Adjust: Push the lever forward, slide the seat backward or forward to the desired position and release the lever.

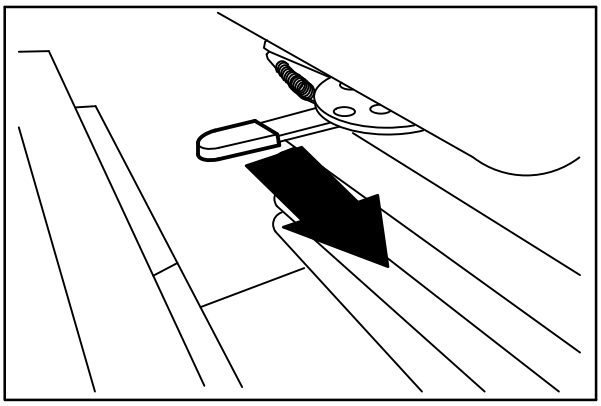

08443

The ride stiffness is adjusted with the stiffness knob.

Adjust: Turn the knob clockwise to increase the ride stiffness, and counter-clockwise to decrease the ride stiffness.

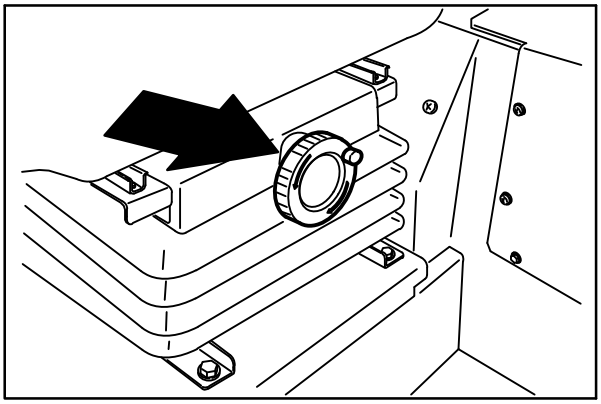

08444

Lift: Pull up on the seat mounting plate until the seat mount locks up.

Lower: Pull on the release lever and lower the seat mounting plate.

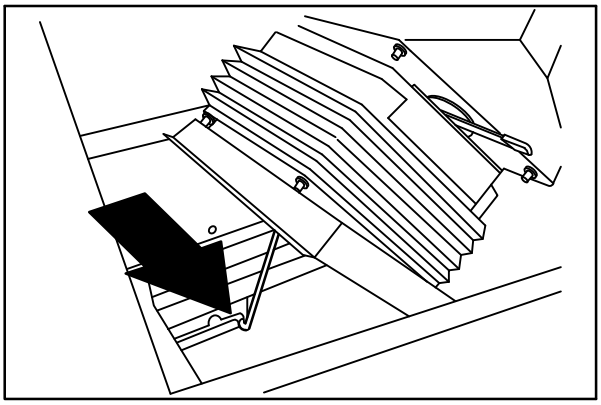

08445

HOPPER SUPPORT BAR

The hopper support bar is located on the operator's side of the hopper. The hopper support bar holds the hopper in the raised position to allow work under the hopper. DO NOT rely on the machine hydraulic system to keep the hopper raised.

WARNING: Raised hopper may fall. Engage hopper support bar.

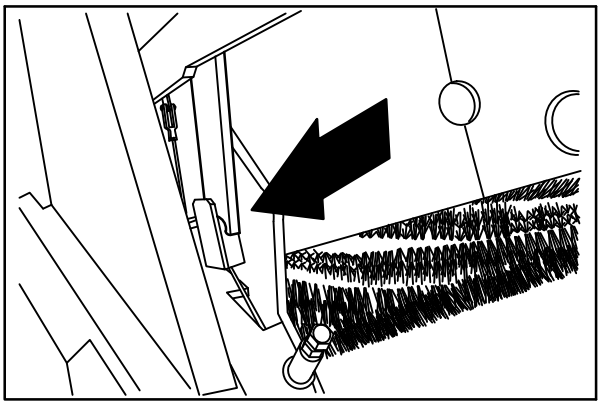

08446

WINDSHIELD WIPER SWITCH (OPTION)

The windshield wiper switch operates the windshield wiper on the cab option.

On: Pull out on the switch.

Off: Push in on the switch.

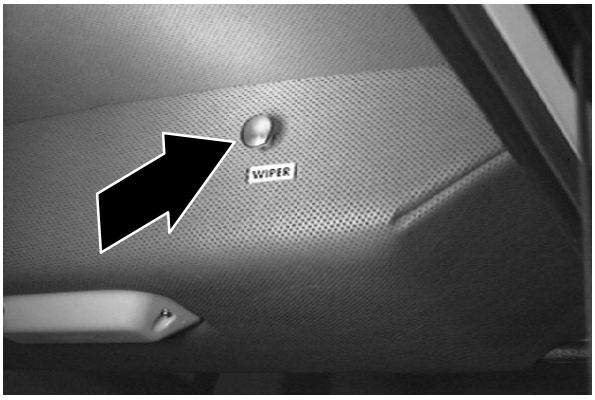

DOME LIGHT SWITCH (OPTION)

The dome light switch controls the dome light on the cab option.

On: Press on the switch.

Off: Press on the switch again.

HEATER KNOB (OPTION)

The heater knob controls the cab heater on the cab option. The heater knob is located above the parking brake lever.

On: Pull the knob out until the air temperature is at the desired comfort level. For maximum heat, pull the knob out all the way.

Off: Push the knob in all the way.

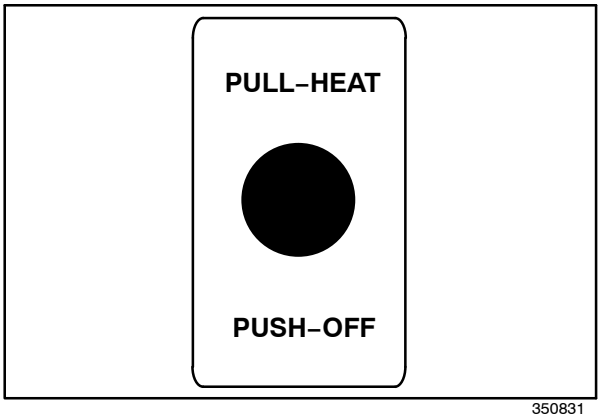

350831

FAN SPEED SWITCH (OPTION)

The fan speed switch controls the speed of the fan in the optional cab. The pressurizer can be set at three different speeds and into the **off** setting. The fan speed switch is located on the roof of the optional cab.

High: Turn the switch clockwise to the **high** setting.

Medium: Turn the switch clockwise to the **medium** setting.

Low: Turn the switch clockwise to the **low** setting.

Off: Turn the switch counter−clockwise to the **off** setting.

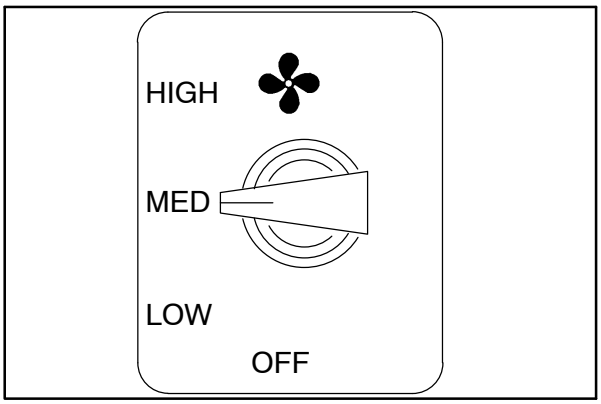

350832

AIR CONDITIONING SWITCH (OPTION)

The air conditioning switch operates the cab's air conditioner in the optional cab. The air conditioning switch is located on the roof of the optional cab.

On: Turn the switch clockwise until the air temperature is at the desired comfort level. For maximum cooling, turn the switch clockwise all the way to the maximum position.

Off: Turn the switch counter−clockwise all the way to the **off** position.

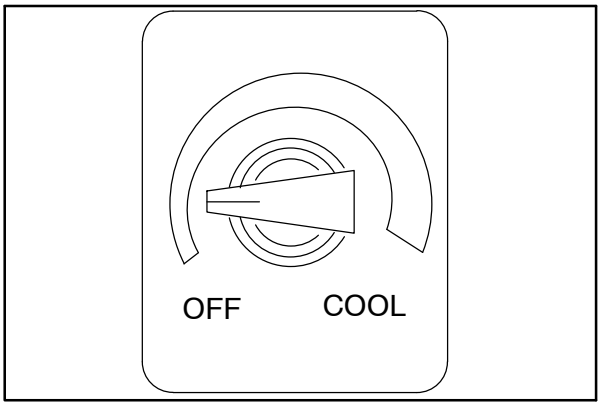

350833

AIR CONTROL VENTS (OPTION)

The air control vents control the direction of the air flow in an optional cab. Turn the vents until they meet your desired comfort level. For defrosting, direct the air control vents onto the windows. This creates warm, dry air which works best for defrosting. If this causes the windows to fog, turn on the air conditioner for drier air.

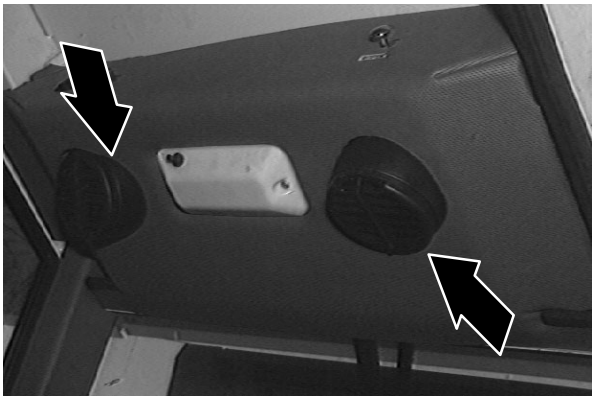

BRUSH INFORMATION

For best results, use the correct brush type for the cleaning application.

NOTE: *The amount and type of soilage play an important role in determining the type of brushes to use. Contact a Tennant representative for specific recommendations.*

Polypropylene 8-double Row Main Brush – Recommended for general sweeping applications.

Polypropylene and Wire 8-double Row Main Brush – Recommended for general sweeping and slightly impacted debris.

Crinkle Wire 8-double Row Main Brush – Recommended for foundry sweeping where heat may melt synthetic bristles. The stiff wire bristles cut through compacted grime, hard to sweep dirt, and dirt mixed with oil, grease, or mud.

Nylon 24-row Main Brush – Recommended for severe dust conditions on rough surfaces. This brush has excellent pickup and long life.

Nylon Patrol Main Brush – Recommended for bulky debris swept at faster speeds.

Heavy Gauge Polypropylene 8-double Row Main Brush – Recommended for sweeping outdoor areas. The stiffer bristles provide exceptional pickup of heavier bulky debris.

Polypropylene Side Brush – Recommended for general sweeping of light to medium debris.

Nylon Side Brush – Recommended for general sweeping of rough or irregular surfaces. Nylon has a long wear life.

Flat Wire Side Brush – Recommended for outdoor curb-side sweeping where dirt is heavy or compacted.

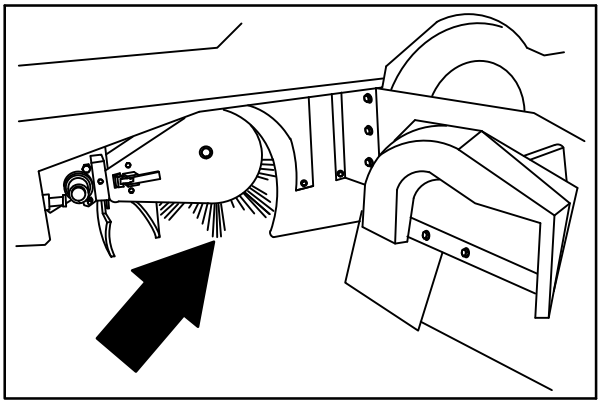

08587

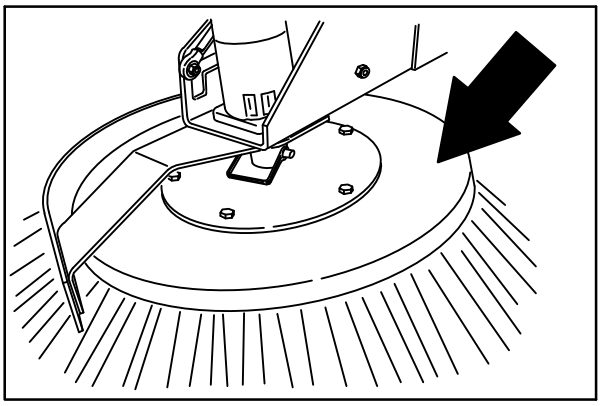

08588

HOW THE MACHINE WORKS

The steering wheel controls the direction of machine travel. The directional pedal controls the speed and forward/reverse direction. The brake pedal slows and stops the machine.

The side brush sweeps debris into the path of the main brush. The main brush sweeps debris from the floor into the hopper. The vacuum system pulls dust and air through the hopper and the hopper dust filters.

The side brush sweeps debris into the path of the main brush. The Power Throw brush is used to help pick up bulky debris. The main brush sweeps debris from the floor into the hopper. The vacuum system pulls dust and air through the hopper and the hopper dust filters.

PRE-OPERATION CHECKLIST

- ❑ Check the engine oil level.
- ❑ Check the engine coolant level.
- ❑ Check the windshield washer fluid level (when applicable).
- ❑ Check the radiator and hydraulic cooler fins for debris.
- ❑ Check the hydraulic fluid level.
- ❑ Check the machine for fluid leaks.
- ❑ Check the air filter indicator.
- ❑ Check the skirts and seals for damage and wear.
- ❑ Check the condition of the main brush. Remove string, banding, plastic wrap, or other debris wrapped around the brush.
- ❑ Side Brush Option: Check the condition of the brush. Remove string, banding, plastic wrap, or other debris wrapped around the brush(es).
- ❑ Side Brush Option: Check the condition of the side brush skirt.
- ❑ Check for rubbing hoses or wires and leaks or obstructions.
- ❑ Check the condition of the hopper dust filter and seals. Clean as required.
- ❑ Check the brakes and steering for proper operation.
- ❑ Check the horn, headlights, taillights, safety lights, and backup alarm (if equipped).
- ❑ Check the fuel level
- ❑ Empty the debris hopper.
- ❑ Check the service records to determine maintenance requirements.

CHANGING AN LPG FUEL TANK

1. Park the machine in a designated safe area.

2. Close the tank service valve on the LPG tank located under the operator seat.

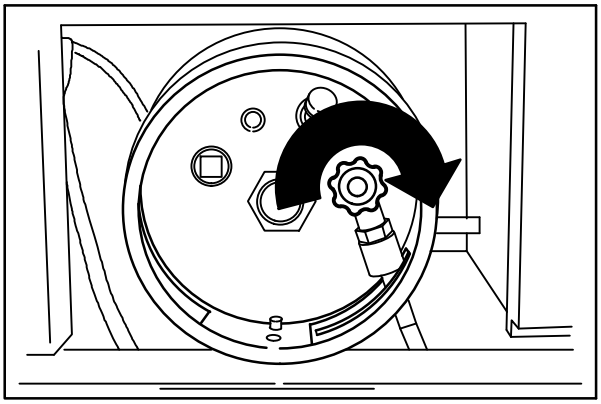

07810

3. Operate the engine until it stops from lack of fuel, then set the machine parking brake.

   FOR SAFETY: When servicing machine, keep flames and sparks away from fuel system service area. Keep area well ventilated.

4. Put on gloves and remove the quick-disconnect tank coupling.

5. Remove the empty LPG fuel tank from the machine and store the tank in a designated, safe area.

NOTE: Make sure the LPG fuel tank matches the fuel system (liquid tank with liquid system).

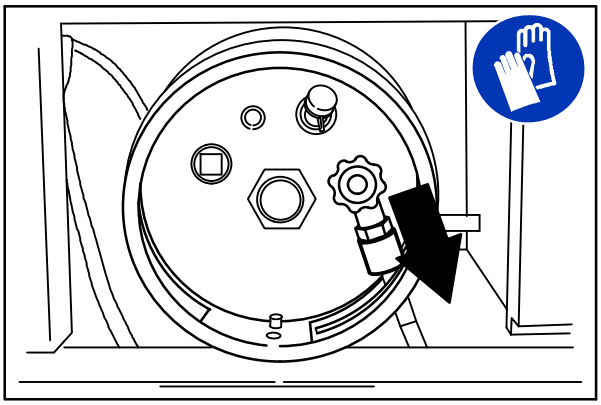

07811

6. Carefully put the filled LPG tank in the machine so that the tank centering pin enters the aligning hole in the tank collar.

7. Fasten the tank hold-down clamp to lock the tank in position.

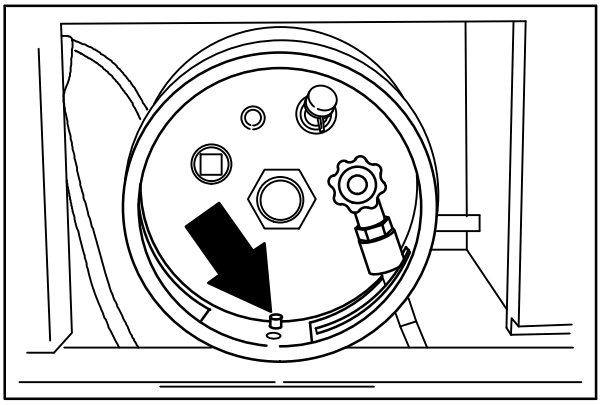

07812

8. Connect the LPG fuel line to the tank service coupling. Make sure the service coupling is clean and free of damage. Also make sure it matches the machine service coupling.

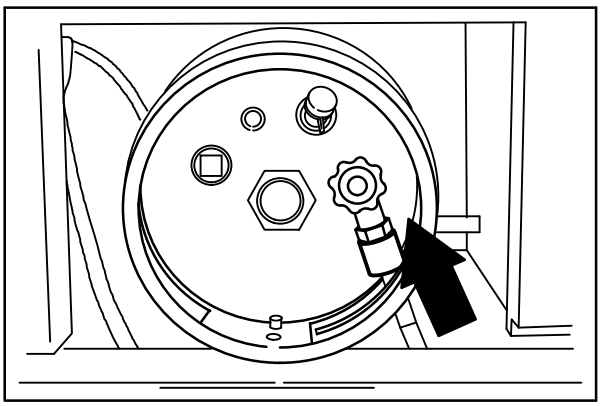

07813

9. Open the tank service valve slowly and check for leaks. Close the service valve immediately if an LPG leak is found, and tell the appropriate personnel.

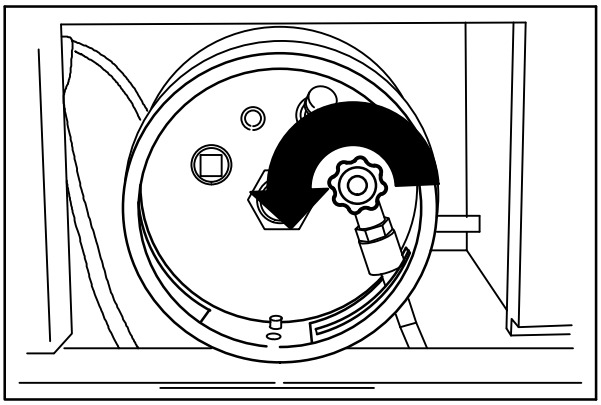

07814

STARTING THE MACHINE

1. LPG powered machines: Open the liquid service valve slowly.

NOTE: Opening the service valve too quickly may cause the service check valve to stop the flow of LPG fuel. If the check valve stops the fuel flow, close the service valve, wait a few seconds and open the valve slowly again.

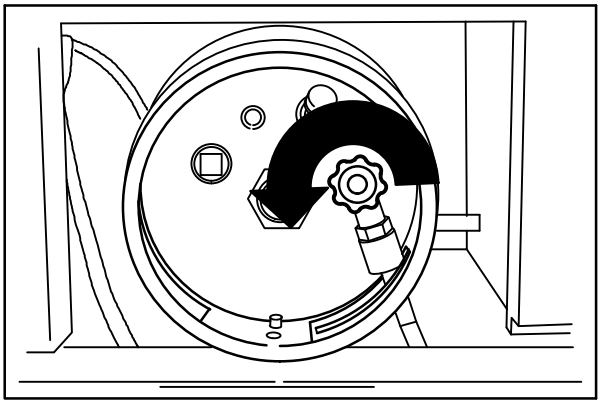

07814

2. You must be in the operator's seat with the directional pedal in neutral, and your foot on the brake pedal or with the parking brake set.

   FOR SAFETY: When starting machine, keep foot on brake and directional pedal in neutral.

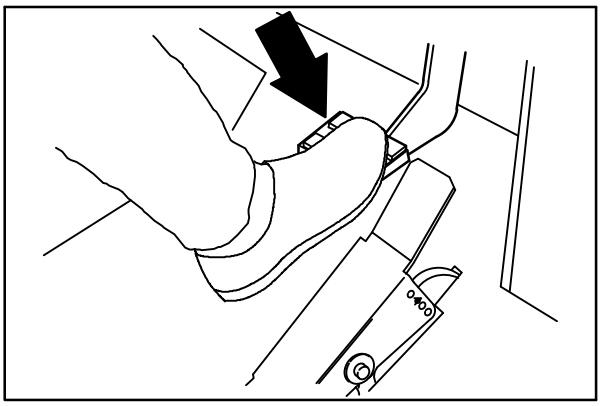

08471

3. Turn the ignition switch key clockwise until the engine starts.

NOTE: When restarting engine, you must wait 15–20 seconds before the starter motor will engage again.

NOTE: Do not operate the starter motor for more than 10 seconds at a time or after the engine has started. Allow the starter to cool between starting attempts or damage to the starter motor may occur.

4. Allow the engine and hydraulic system to warm up for three to five minutes.

WARNING: Engine emits toxic gases. Severe respiratory damage or asphyxiation can result. Provide adequate ventilation. Consult with your regulatory authorities for exposure limits. Keep engine properly tuned.

5. Release the machine parking brake.

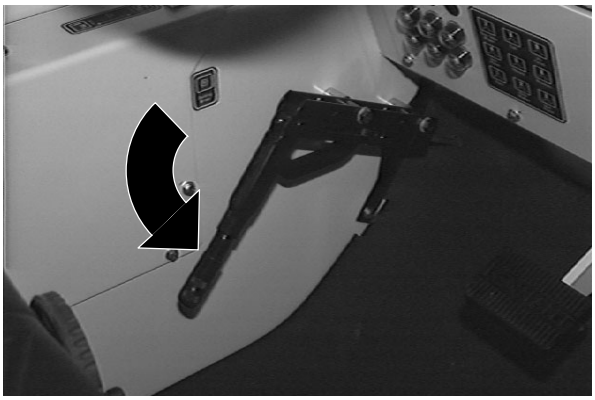

6. Select the **Fast** engine speed with the engine speed switch.

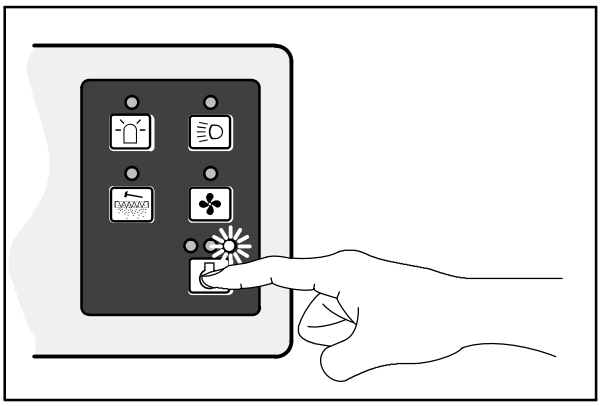

07772

7. Drive the machine to the area to be swept.

WHILE OPERATING THE MACHINE

Pick up oversized debris before sweeping. Pick up wire, string, twine, large pieces of wood, or any other debris that could become wrapped around or tangled in the brushes.

Drive as straight a path as possible. Avoid bumping into posts or scraping the sides of the machine. Overlap the sweep paths by several centimeters (a few inches).

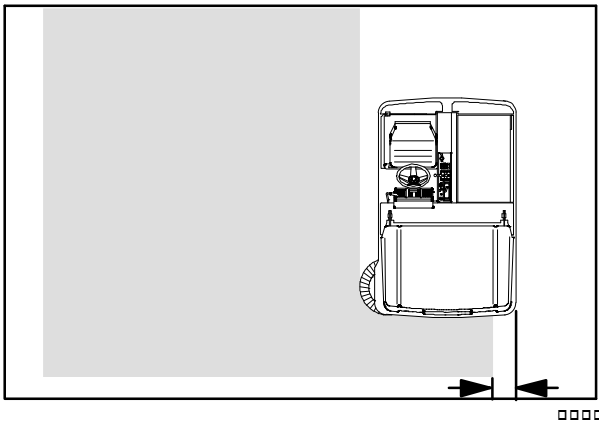

Avoid turning the steering wheel too sharply when the machine is in motion. The machine is very responsive to the movement of the steering wheel. Avoid sudden turns, except in emergencies.

Adjust the machine speed and brush pressure. Use the lowest brush pressure for best performance.

Keep the machine moving to prevent damaging floor finishes.

If poor cleaning performance is observed, stop cleaning and refer to *MACHINE TROUBLESHOOTING* in this manual.

Perform the Daily Maintenance Procedures after each use (see MACHINE MAINTENANCE in this manual).

Drive the machine slowly on inclines. Use the brake pedal to control machine speed on descending inclines. Sweep with the machine up inclines rather than down inclines.

FOR SAFETY: When using machine, go slowly on inclines and slippery surfaces.

FOR SAFETY: When using machine, do not raise hopper when machine is on an incline.

SWEEPING

1. Select **Fast** engine speed.

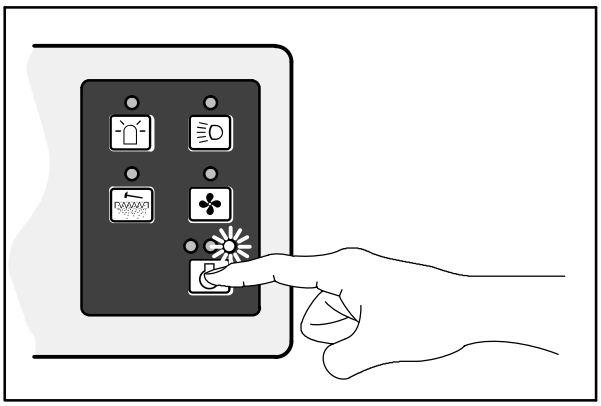

07772

2. The hopper door has to be closed during sweeping. If your machine has the hopper door light option, make sure the hopper door light is off. If the hopper door light is on, close the hopper door.

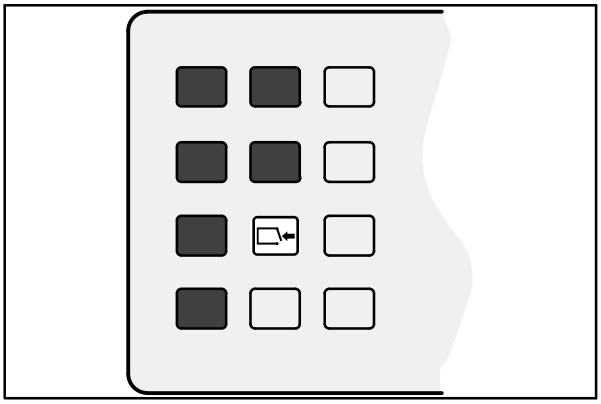

07763

3. Place the main brush switch in the **Normal** or **II Speed** position.

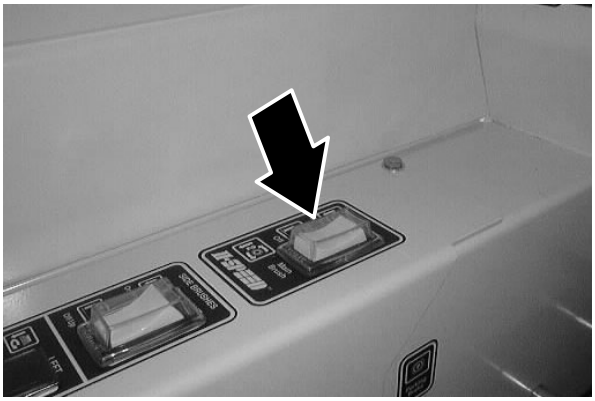

4. Push the top of the side brush switch into the **On**/**Down** position.

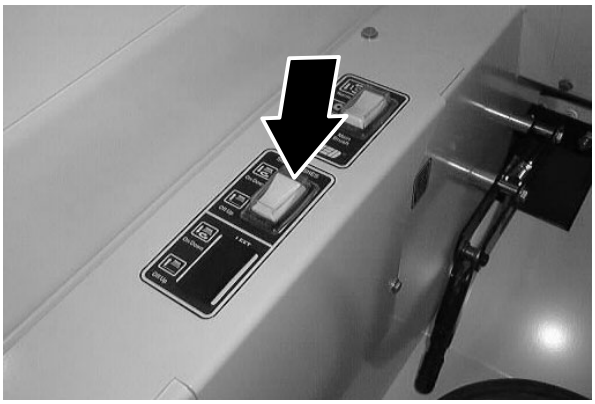

5. Press the vacuum fan switch to start the vacuum.

6. Sweep as needed.

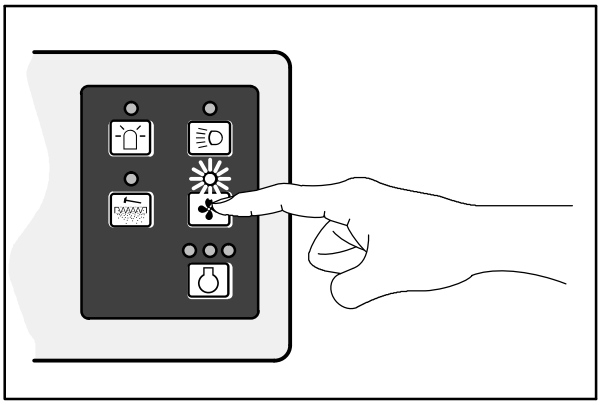

07769

STOP SWEEPING

1. Push the bottom of the side brush switch into the **Off**/**Up** position.

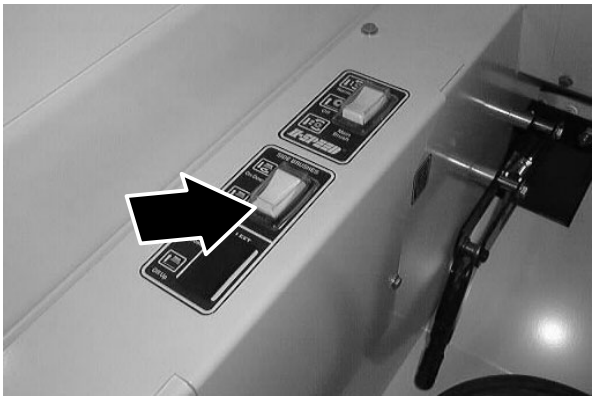

2. Place the main brush switch in the middle **Off** position.

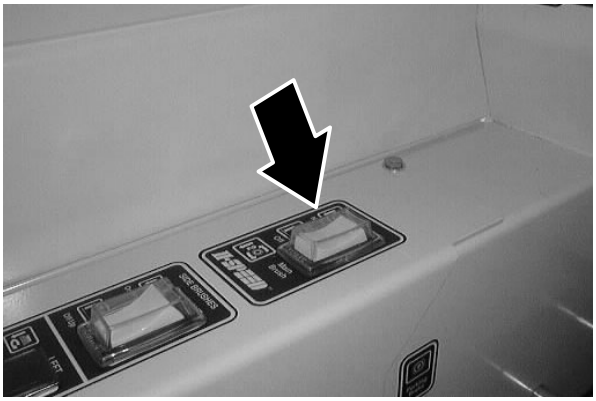

3. Press the filter shaker switch to shake the hopper dust filter.

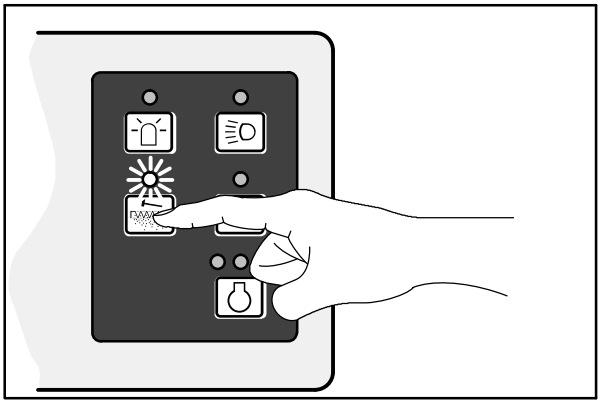

07767

EMPTYING THE HOPPER

1. Slowly drive the machine to the debris site or debris container.

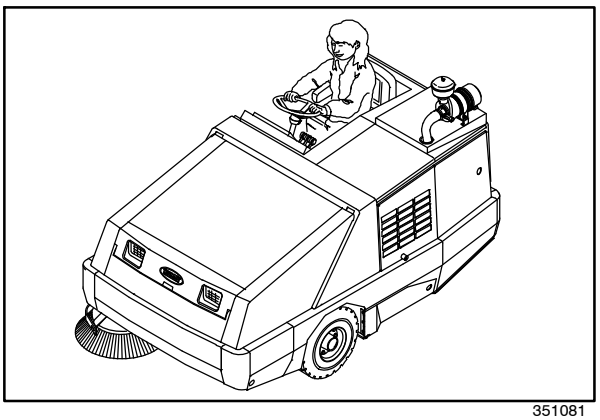

351081

2. Pull and hold the hopper lift lever in the **Up** position and raise the hopper to the desired height.

   FOR SAFETY: When using machine, make sure adequate clearance is available before raising hopper.

NOTE: Be aware that the minimum ceiling height needed to high dump the hopper is 3355 mm (11 ft).

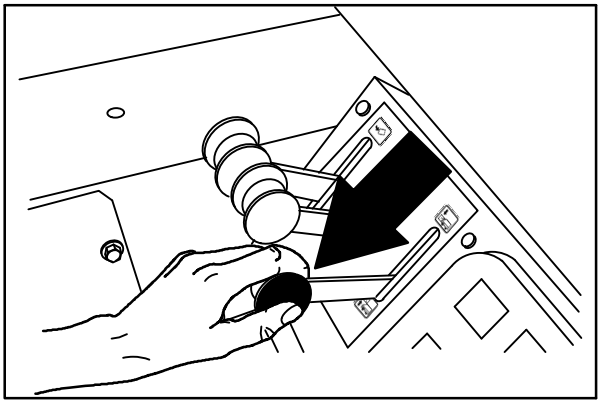

08480

3. Release the hopper lift lever up and into the middle (Hold) position.

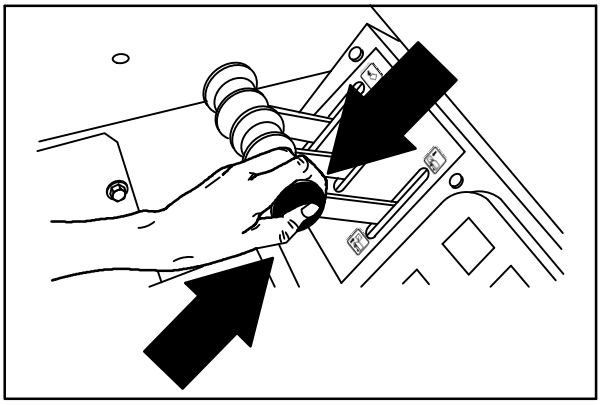

08481

4. Drive the machine up to the debris container.

   FOR SAFETY: When using machine, move machine with care when hopper is raised.

5. Pull and hold the hopper rollout lever into the **Out** position.

6. Lower the hopper into the debris container to control dust.

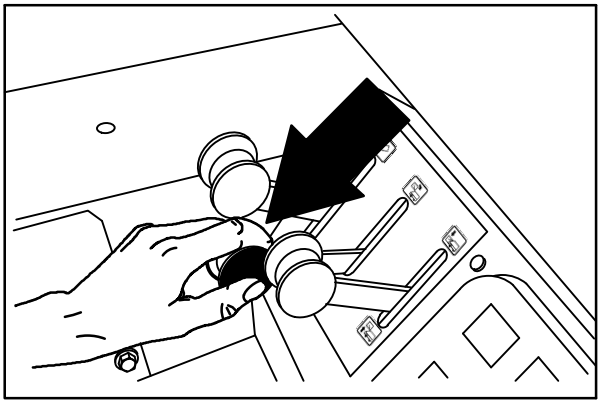

08477

7. Pull and hold the hopper door lever into the **Open** position.

8. Raise the hopper enough and/or close the hopper door to clear the top of the debris container.

9. Slowly back the machine away from the debris site or debris container.

   FOR SAFETY: When using machine, move machine with care when hopper is raised.

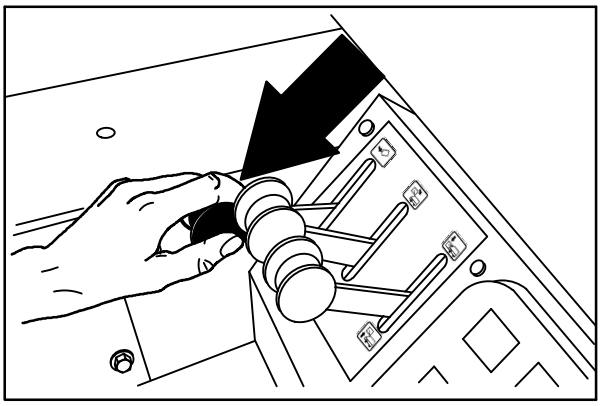

08474

10. Push and hold the hopper door lever into the **Close** position.

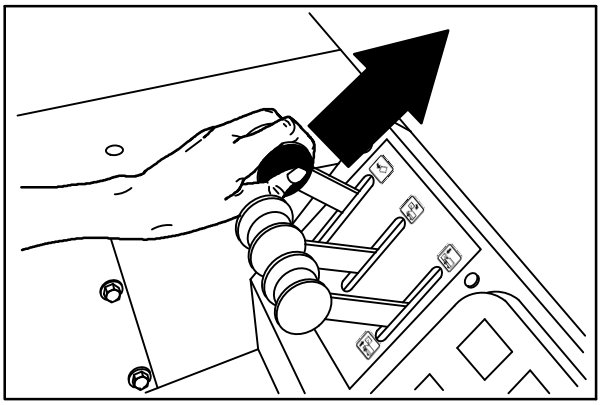

08476

11. Push and hold the hopper rollout lever into the **In** position.

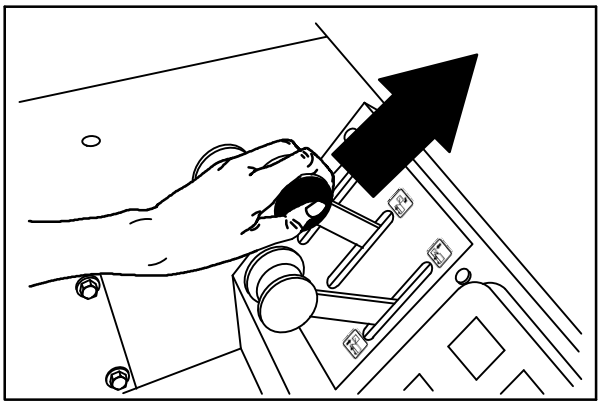

08479

12. Push and hold the hopper lift lever in the **Down** position.

NOTE: The hopper lift lever, hopper rollout lever, and the hopper door lever can be use together to lift the hopper, rollout the hopper, and open the hopper door.

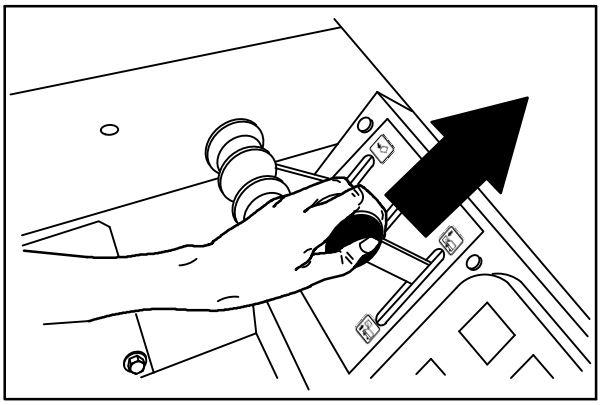

08482

STOP THE MACHINE

1. Stop sweeping.
2. Take your foot off the directional pedal. Step on the brake pedal.

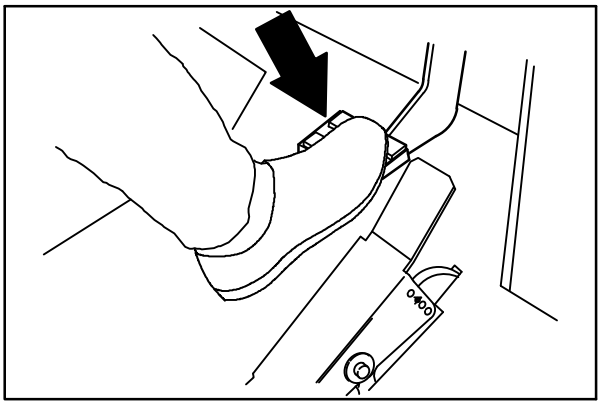

08471

3. Select the **Idle** position with the engine speed switch.

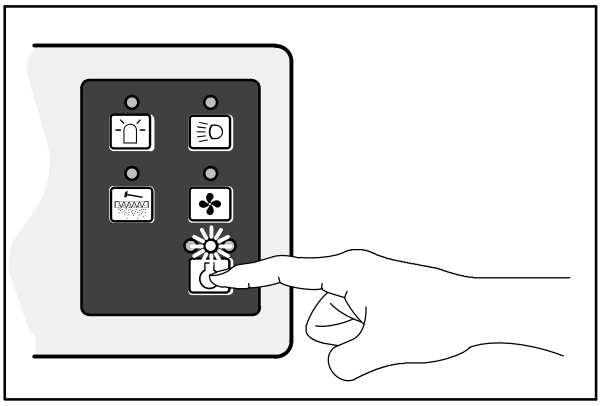

07771

4. Set the machine parking brake.

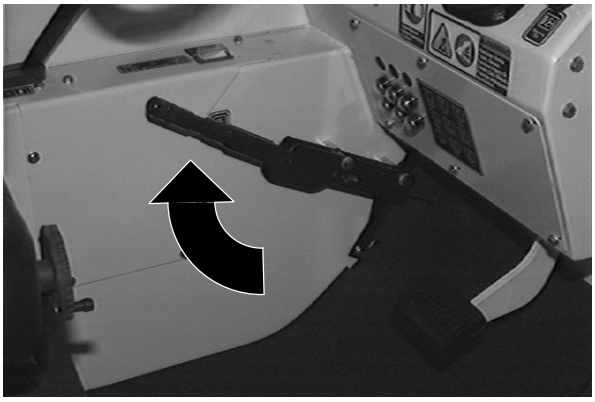

5. Turn the ignition switch key counter-clockwise to stop the engine. Remove the switch key.

   FOR SAFETY: Before leaving or servicing machine; stop on level surface, set parking brake, turn off machine and remove key.

NOTE: To protect the engine's emission components on the LPG powered machines, the engine will continue to operate for a few seconds after the ignition switch is turned off.

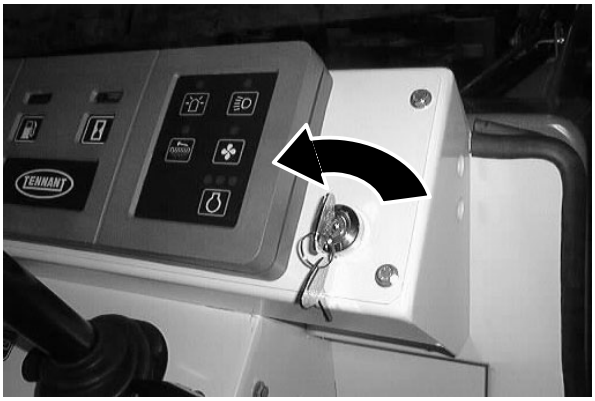

6. LPG powered machines: Close the LPG tank's liquid service valve.

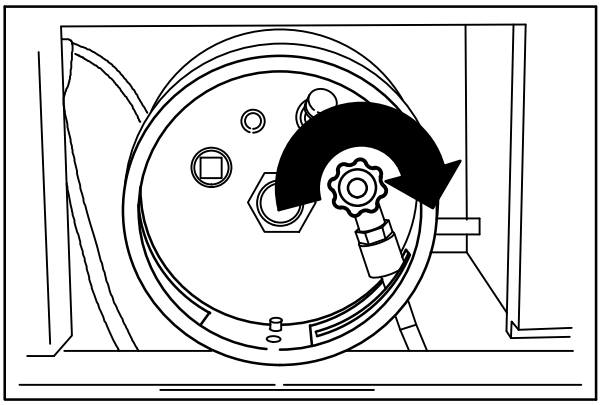

07810

ENGAGING HOPPER SUPPORT BAR

1. Set the machine parking brake.

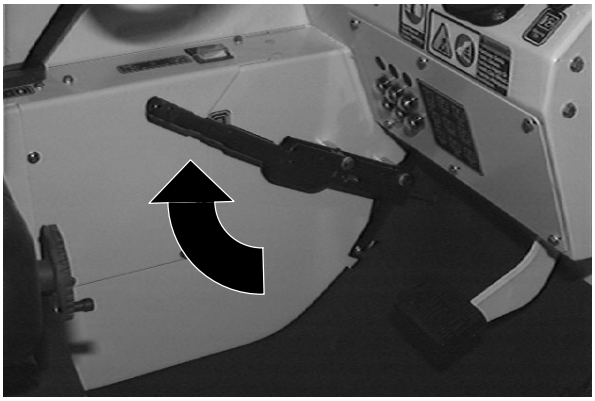

2. Start the engine.

3. Raise the hopper all the way up.

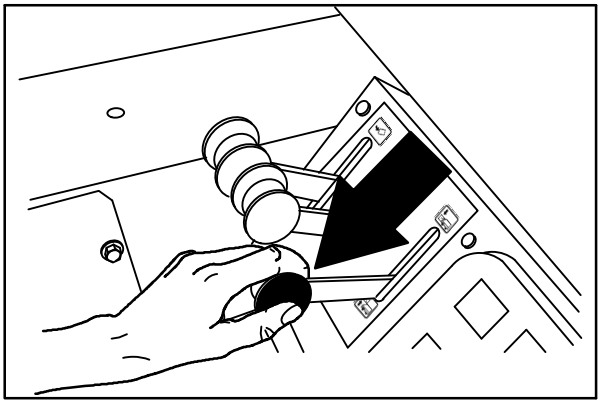

08480

4. Remove the support bar from the storage clip.

WARNING: Raised hopper may fall. Engage hopper support bar.

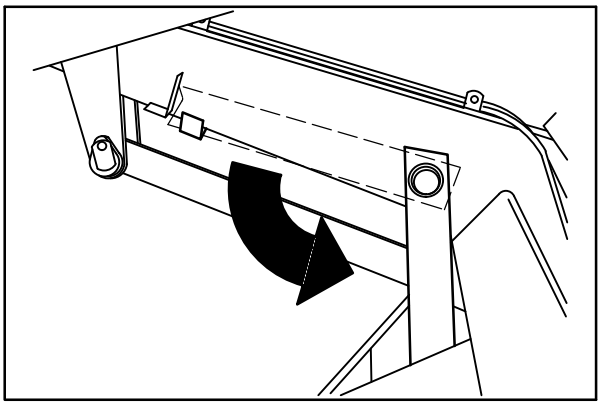

08589

5. Slowly lower the hopper so the support bar rests on the bar stop on the machine frame.

WARNING: Lift arm pinch point. Stay clear of hopper lift arms.

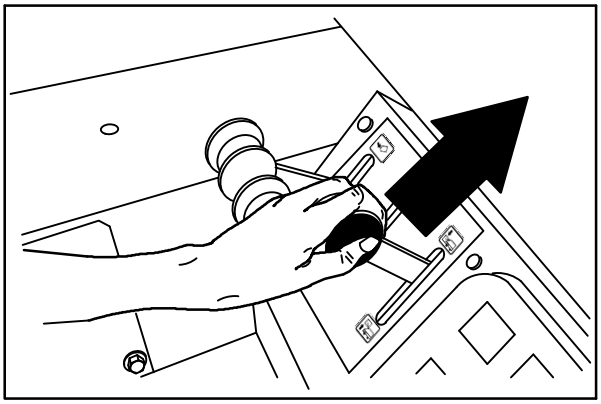

08482

6. Shut the engine off.

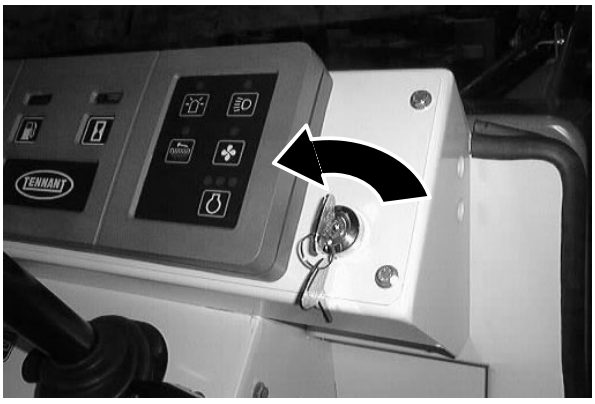

DISENGAGING HOPPER SUPPORT BAR

1. Start the engine.

2. Raise the hopper slightly to release the hopper support bar.

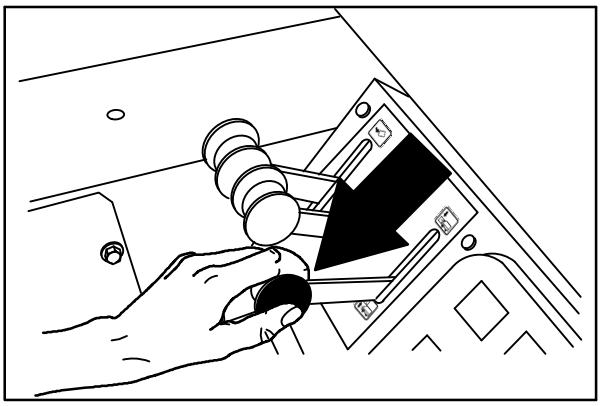

08480

3. Put the hopper support bar in the storage clip.

WARNING: Lift arm pinch point. Stay clear of hopper lift arms.

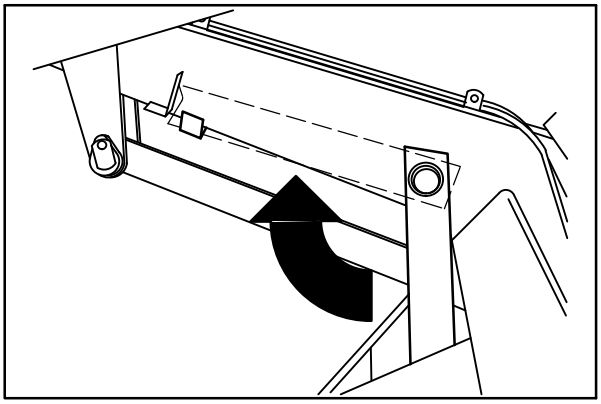

08590

4. Lower the hopper.

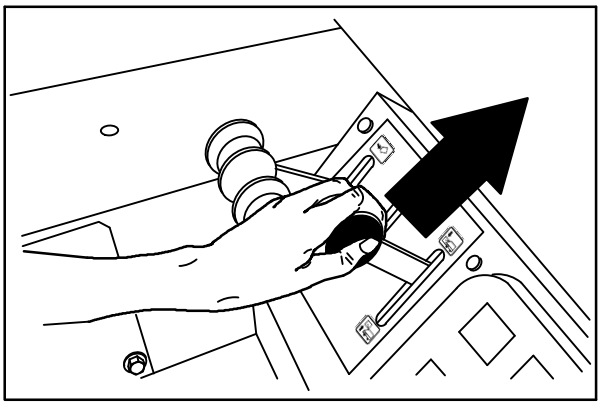

08482

5. Shut the engine off.

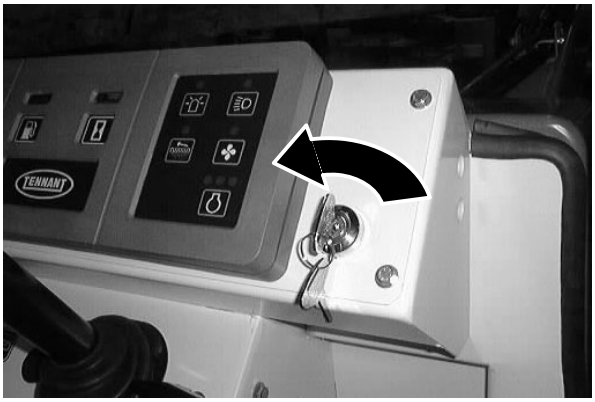

OPTIONS

VACUUM WAND

The vacuum wand uses the machine's vacuum system. The vacuum hose and wand allow pick-up of debris that is out of reach of the machine.

1. Stop the machine within reach of the area to be vacuumed and set the machine parking brake.

   FOR SAFETY: Before leaving or servicing machine; stop on level surface, set parking brake, turn off machine and remove key.

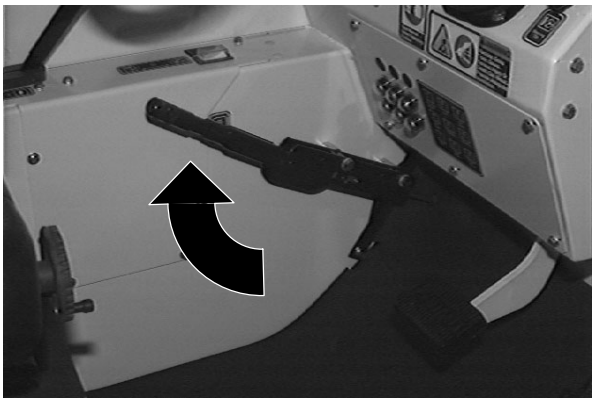

2. Turn off the vacuum fan by pressing the vacuum fan switch. The indicator light above the switch will go off.

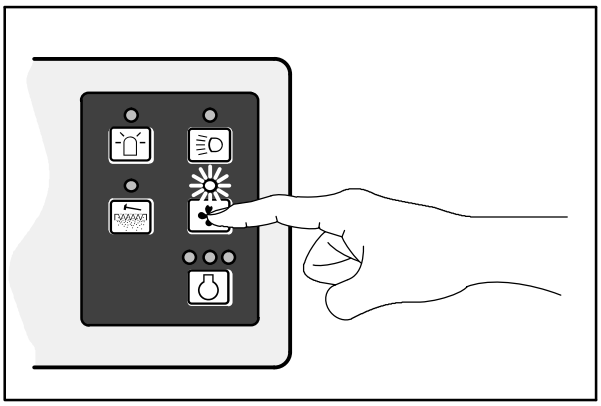

07769

3. Turn off and lift the main brush by placing the switch in the middle **Off** position.

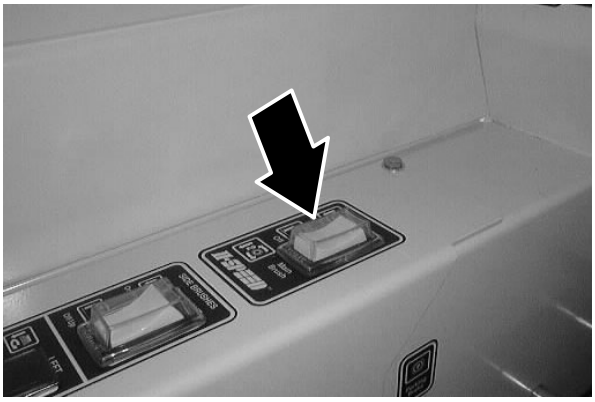

4. Turn off and lift the side brush(es) by placing the bottom of the switch(es) into the **Off**/**Up** position.

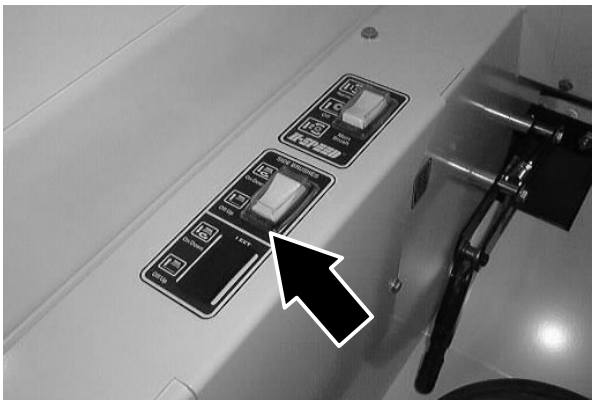

5. Open the forward hopper access door and engage the lift arm.

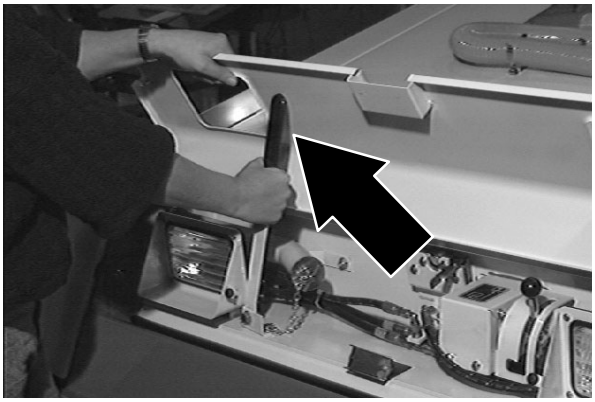

6. Remove the vacuum plug from the vacuum adaptor tube in front of the hopper.

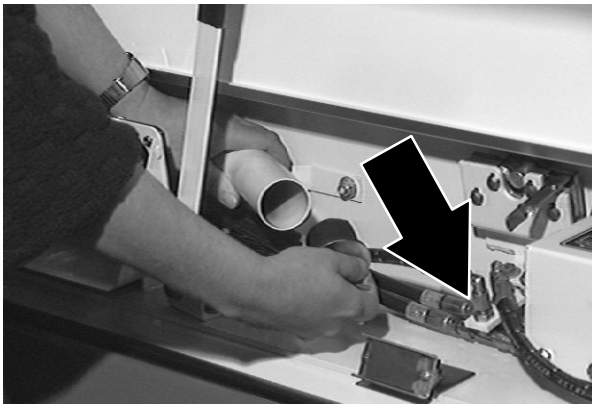

7. Remove the vacuum wand and hose from the mounting clips and assemble them together.

8. Connect the vacuum hose to the vacuum adaptor tube in front of the hopper.

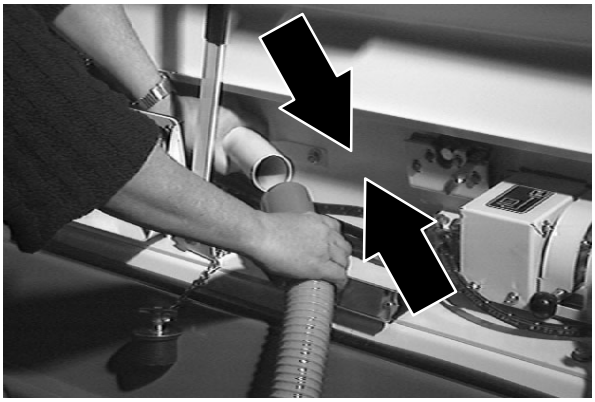

9. Close the vacuum door by sliding the vacuum door lever down and to the left into the locked position.

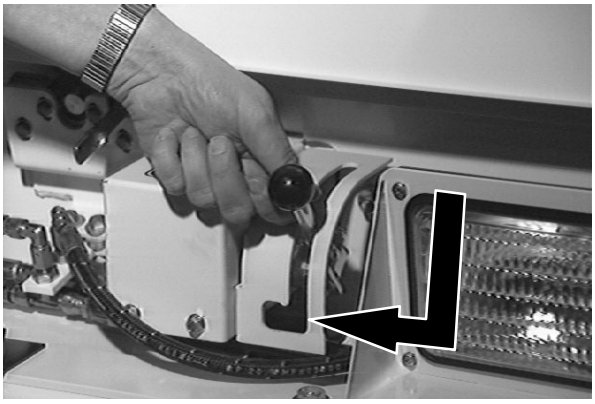

10. Turn on the vacuum fan by pressing the vacuum fan switch. The indicator light above the switch will go on.

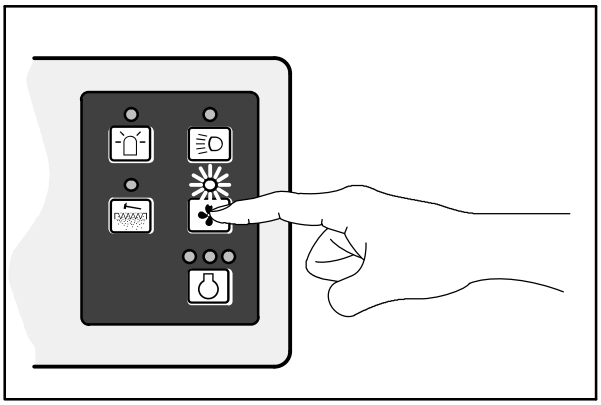

07769

11. Vacuum the area as needed.

12. When done vacuuming, turn off the vacuum fan by pressing the vacuum fan switch. The indicator light above the switch will go off.

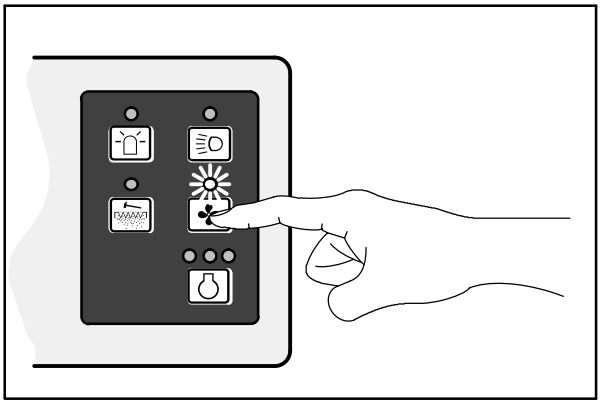

07769

13. Open the vacuum door by sliding the vacuum door lever to the right and up from the locked position.

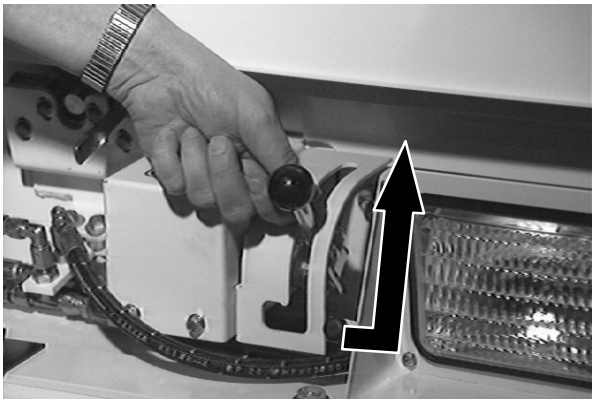

14. Disconnect the vacuum hose from the vacuum adaptor tube in front of the hopper.

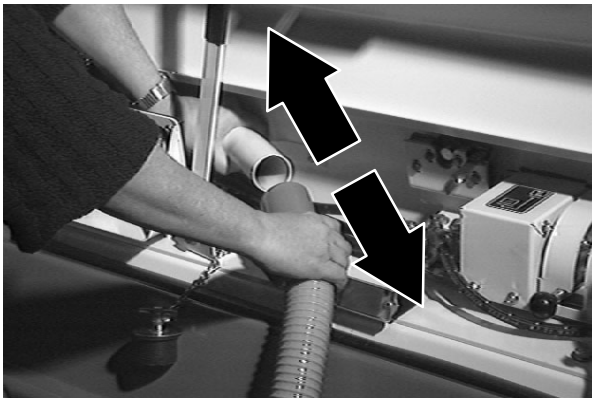

15. Disassemble the vacuum hose assembly and place back onto the hopper in the mounting clips.

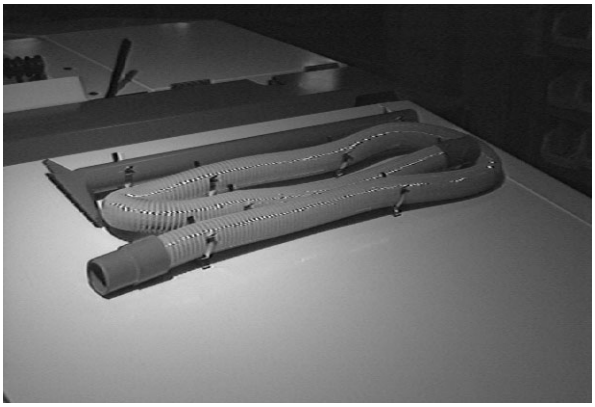

16. Replace the vacuum plug into the vacuum adaptor tube in front of the hopper, disengage the lift arm and close the forward hopper access door.

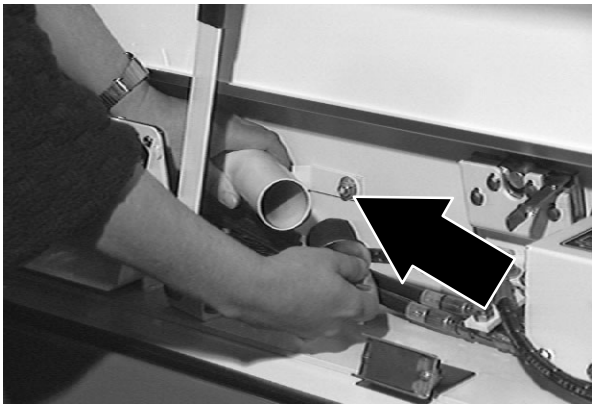

REGENERATIVE FILTER SYSTEM (RFS)

The Regenerative Filter System (RFS) is an option that alternately turns on the filter shaker motors when the filters need cleaning because of a build−up of dust or debris.

Normally the RFS does not require the operator to stop the machine to shake the filters during sweeping operation (except in extreme and severe dust environments). However, it is recommended that the filters are shaken at the operator's initiative each time the hopper is dumped. This can be accomplished during transit to a dump sight. *AVOID* shaking the filters while hopper is in a rolled out position. To initiate a shaking cycle, press the filter button on the instrument panel. See *FILTER SHAKER SWITCH.*

In very severe dust environments, the plugged filter indicator on the instrument panel may remain lit. When this occurs, it is recommended that the operator stop the machine and initiate one or two shake cycles to clear a possible plugged filter condition. After shaking, roll the hopper out to evacuate the dust tray. Resume sweeping operation.

If the hopper is over full, the light may come on. Check the hopper load and dump if necessary.

If the filter light remains on after all the above conditions are corrected, the filters may be plugged or the RFS may be inoperative. Filters may be shaken by the operator initiative by pressing the filter button on the instrument panel if there is a failure in the RFS control system.

Successful operation of the RFS option requires clean, undamaged filters. Plugged filters may cause the RFS to cycle continuously even at start up. The option also requires good sealing of the upper lid to the hopper, as well as a good seal between the two upper filter chambers.

It is recommended that the machine be driven for some test sweeping with the RFS option at initial start up. This next step assumes the hopper cover and upper filter chamber of the hopper was cleaned thoroughly prior to installation of the RFS option. Sweep for 30 minutes and open the hopper cover to check the integrity of the seals. Look at the top of the shaker panels and the underside of the hopper cover. Check for any signs of *dust tracking* that may be caused by a bad seal or filter. Repair a necessary. Perform this check periodically while using the sweeper with the RFS option.

MACHINE TROUBLESHOOTING

Problem	Cause	Remedy
Excessive dusting	Brush skirts and dust seals worn, damaged, out of adjustment	Replace or adjust brush skirts or dust seals
	Hopper dust filter clogged	Shake and/or clean or replace dust filter
	Main brush operating in **II Speed**	Operate main brush in **Normal** speed
	Vacuum hose damaged	Replace vacuum hose
	Vacuum fan seal (vacuum fan inlet bracket) damaged	Replace seal
	Vacuum fan failure	Contact TENNANT service personnel
	Hopper door partially or completely closed	Open the hopper door
	Thermo Sentry tripped	Reset Thermo Sentry
	Fabric presceen missing on dust filters	Clean filter elements and install fabric prescreen
Poor sweeping performance	Brush bristles worn	Replace brushes
	Main and side brushes not adjusted properly	Adjust main and side brushes
	Debris caught in main brush drive mechanism	Free drive mechanism of debris
	Main brush drive failure	Contact TENNANT service personnel
	Side brush drive failure	Contact TENNANT service personnel
	Hopper full	Empty hopper
	Hopper floor skirts worn or damaged	Replace floor skirts
	Hopper door partially or completely open	Close the hopper door
	Wrong sweeping brush	Contact TENNANT representative for recommendations

MAINTENANCE

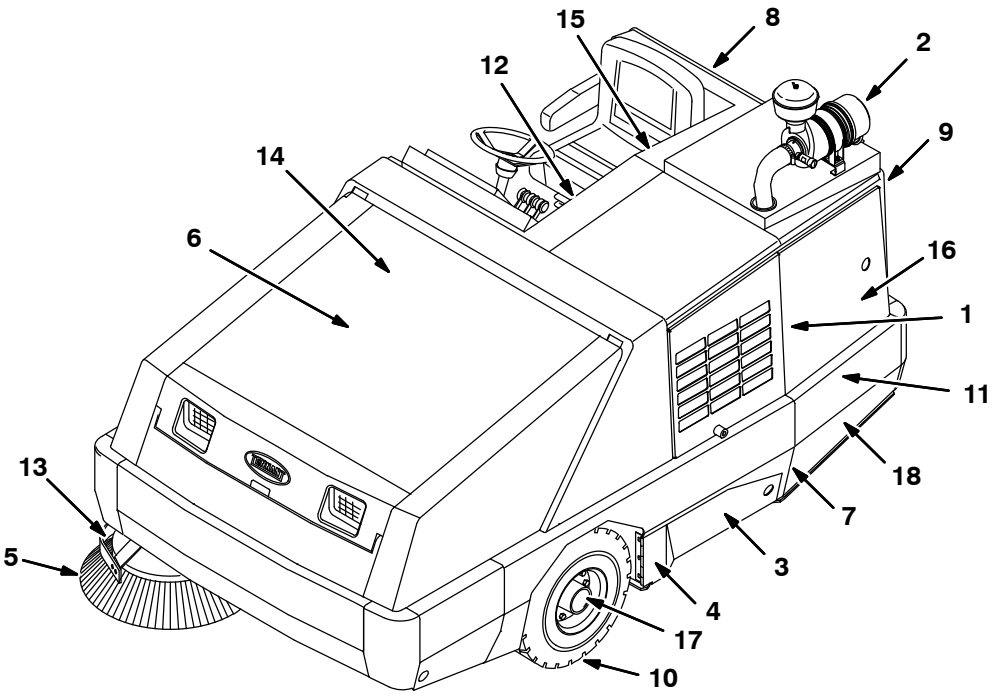

07623

MAINTENANCE CHART

The table below indicates the *Person Responsible* for each procedure.
O = Operator
T = Trained Personnel

Interval	Person Resp.	Key	Description	Procedure	Lubricant/ Fluid	No. of Service Points
Daily	O	1	Engine	Check oil level	EO	1
				Check coolant level in reservoir	WG	1
	O	2	Engine air filter	Check indicator	–	1
				Empty dust cap	–	1
	O	8	Hydraulic fluid reservoir	Check fluid level	EO	1
	O	3	Brush compartment skirts	Check for damage, wear, and adjustment	–	6
	O	4	Hopper lip skirts	Check for damage, wear, and adjustment	–	3
	O	3	Main brush	Check for damage and wear	–	1
	O	5	Side brush	Check for damage and wear	–	1
				Check brush pattern	–	1
	O	6	Hopper dust filter	Shake	–	2

The table below indicates the *Person Responsible* for each procedure.
O = Operator
T = Trained Personnel

Interval	Person Resp.	Key	Description	Procedure	Lubricant/ Fluid	No. of Service Points
50 Hours	O	3	Main brush	Rotate end-for-end	–	1
	T	3	Main brush	Check brush pattern. Adjust as necessary		
	O	6	Hopper dust filter	Check or clean	–	2
	T	7	Main brush adjustment	Lubricate	SPL	1
	T	1	Engine	Check belt tension	–	1
100 Hours	T	9	Radiator core exterior / hydraulic cooler	Clean cooler fins	–	1
	T	1	Engine	Change oil and filter	–	1
				Drain LPG vaporizer oil buildup	–	1
	O	10	Tires	Check pressure	–	3
	O	3	Main brush & hopper seals	Check for damage or wear	–	12
	T	1	Air conditioner belt (option)	Check tension	–	1
	T	–	Air conditioner filter (option)	Clean, or replace if necessary	–	1
	T	1	Radiator hoses and clamps	Check for tightness and wear	–	All
	T	11	Rear wheel support bearings	Lubricate	SPL	2
	T	12	Parking brake	Check adjustment	–	1
	T	13	Side brush pivot pins	Lubricate	SPL	1
400 Hours	T	1	Engine	Clean air filter	–	1
				Replace fuel filter	–	1
	T	14	Brake master cylinder	Check fluid level	BF	1

LUBRICANT/FLUID

BF . . . . Brake fluid
EO . . . . Engine oil, SAE–SG/SH rated
HYDO . **Tennant*True*** premium hydraulic fluid or equivalent
SPL . . . Special lubricant, Lubriplate EMB grease (TENNANT part no. 01433–1)
WG . . . Water and permanent-type ethylene glycol anti-freeze, –34° C (–30° F)

NOTE: Check procedures indicted (■) after the first 50-hours of operation.

The table below indicates the *Person Responsible* for each procedure.
O = Operator
T = Trained Personnel

Interval	Person Resp.	Key	Description	Procedure	Lubricant/ Fluid	No. of Service Points
800 Hours	T	6	Hydraulic reservoir	Replace filler cap	GL	1
	T	–	Hydraulic hoses	Check for wear and damage	–	All
	T	1	Cooling system	Flush	WG	1
	T	11	Propelling motor	■ Torque shaft nut	–	1
	T	11	Front / rear wheels	■ Torque wheel nuts	–	3
	T	15	Battery	■ Clean and tighten battery cable connections	–	1
1000 Hours	T	1	Engine	Clean or replace spark plugs	–	4
				Inspect PVC system	–	1
	T	1	Radiator hoses	Check for cracks or deterioration	–	All
1200 Hours	T	16	Hydraulic fluid filter	Change filter element	–	All
1600 Hours	T	17	Front wheel bearings	Check, lubricate, and adjust	SPL	2
2400 Hours	T	6	Hydraulic fluid reservoir	Replace suction strainer	–	1
				Change hydraulic fluid	HYDO	1
5000 Hours	T	1	Engine	Replace camshaft and balance shaft belts	–	2
1 Year	T	1	Engine air filter	Replace air filter element	–	1

LUBRICANT/FLUID

BF . . . . Brake fluid
EO . . . . Engine oil, SAE–SG/SH rated
HYDO . **Tennant*True*** premium hydraulic fluid or equivalent
SPL . . . Special lubricant, Lubriplate EMB grease (TENNANT part no. 01433–1)
WG . . . Water and permanent-type ethylene glycol anti-freeze, –34° C (–30° F)

NOTE: Check procedures indicted (■) after the first 50-hours of operation.

LUBRICATION

REAR WHEEL SUPPORT

The rear wheel support pivots the rear wheel. The support has one grease fitting for the bearings. The rear wheel support bearings must be lubricated every 200 hours of operation. Use Lubriplate EMB grease (TENNANT part no. 01433–1).

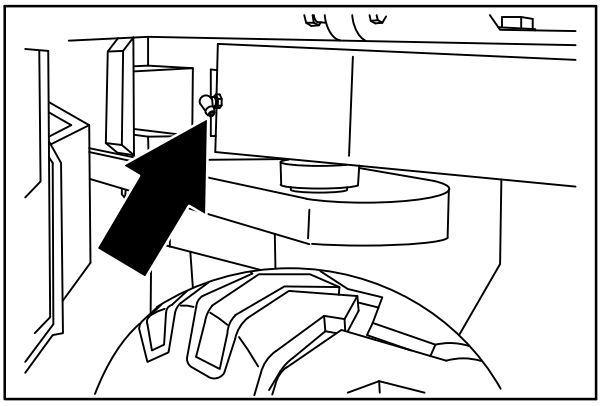

08451

FRONT WHEEL BEARINGS

Inspect the front wheel bearings for seal damage, and repack and adjust every 1600 hours of operation. Use Lubriplate EMB grease (TENNANT part no. 01433–1).

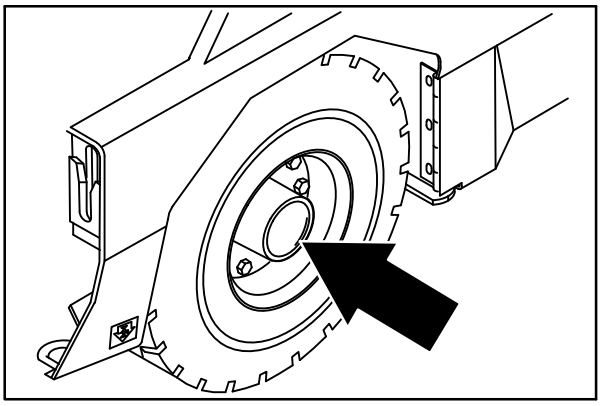

08579

SIDE BRUSH PIVOT PINS

The side brush pivot pins should be lubricated with Lubriplate EMB grease (TENNANT part no. 01433–1) every 200 hours of operation.

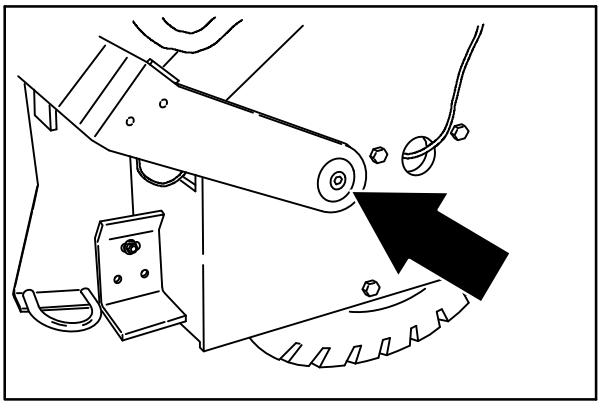

08581

MAIN BRUSH ADJUSTMENT

The main brush adjustment, located on the right side of the main brush, has one grease fitting for lubrication. Lubricate the main brush adjustment every 50 hours of operation with Lubriplate EMB grease (TENNANT part no. 01433–1).

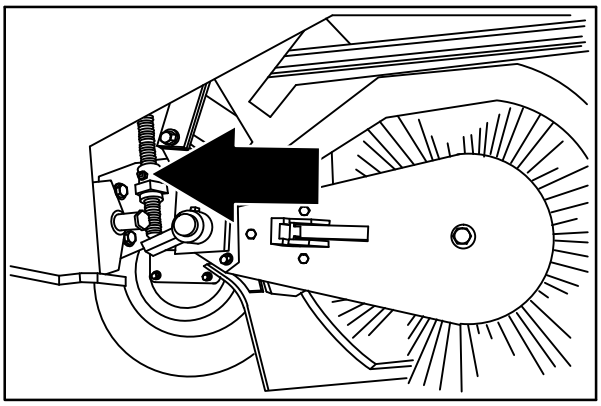

08934

HYDRAULICS

HYDRAULIC FLUID RESERVOIR

The reservoir is located behind the operator seat.

Mounted on top of the reservoir is a filler cap with a built-in breather. Replace the cap every 800 hours of operation.

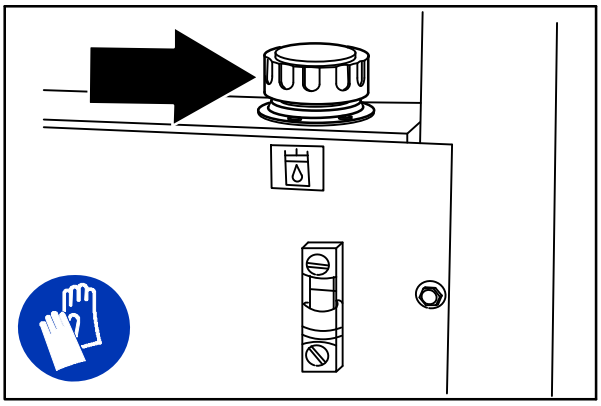

08452

Check the hydraulic fluid level at operating temperature daily. Make sure the hopper is down when checking hydraulic fluid level. The sight gauge is marked with FULL (black line) and ADD (red line) levels to indicate the level of hydraulic fluid in the reservoir.

Lubricate the filler cap gasket with a film of hydraulic fluid before putting the cap back on the reservoir.

> **ATTENTION! Do not overfill the hydraulic fluid reservoir or operate the machine with a low level of hydraulic fluid in the reservoir. Damage to the machine hydraulic system may result.**

Drain and refill the hydraulic fluid reservoir with new **Tennant*True*** premium hydraulic fluid after every 2400 hours of operation.

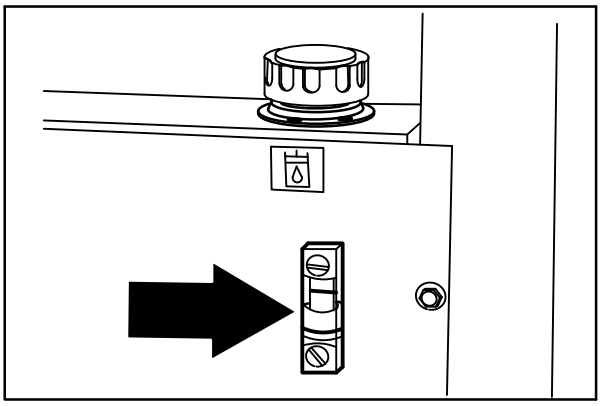

08430

The reservoir has a built-in strainer outlet that filters hydraulic fluid before it enters the system. Replace the strainer every 2400 hours of operation.

The hydraulic fluid filter is located in the engine compartment.

Replace the filter element every 1200 hours of operation.

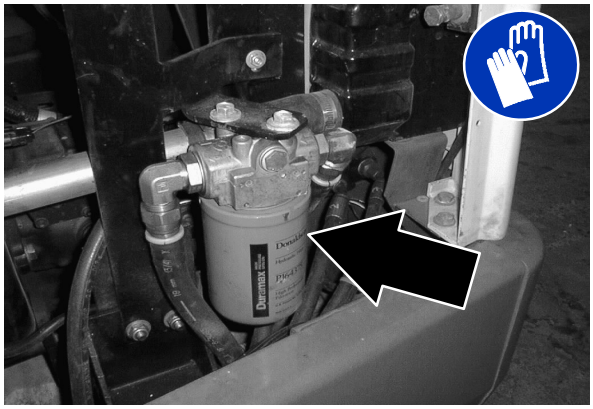

HYDRAULIC FLUID

The quality and condition of the hydraulic fluid play a very important role in how well the machine operates. TENNANT's hydraulic fluid is specially selected to meet the needs of TENNANT machines.

TENNANT's hydraulic fluids provide a longer life for the hydraulic components. There are three fluids available for different temperature ranges:

Tennant*True* premium hydraulic fluid (Extended Life)			
Part Number	**Capacity**	**ISO Grade Viscosity Index (VI)**	**Ambient Air Temperature Ranges**
1057710	3.8 L (1 gal)	ISO 100 VI 126 or higher	19° C (65° F) or higher
1057711	19 L (5 gal)		
1057707	3.8 L (1 gal)	ISO 32 VI 163 or higher	16° C (60° F) or lower
1057708	19 L (5 gal)		

The higher temperature fluid has a higher viscosity and should not be used at the lower temperatures. Damage to the hydraulic pumps may occur because of improper lubrication.

The lower temperature fluid is a thinner fluid for colder temperatures.

If another hydraulic fluid is used, make sure the specifications match TENNANT's hydraulic fluid specifications. Using substitute fluids can cause premature failure of hydraulic components.

European marketed machines are filled with locally available hydraulic fluids. Check the label on the hydraulic fluid reservoir.

ATTENTION! Hydraulic components depend on system hydraulic fluid for internal lubrication. Malfunctions, accelerated wear, and damage will result if dirt or other contaminants enter the hydraulic system.

HYDRAULIC HOSES

Check the hydraulic hoses every 800 hours of operation for wear or damage.

Fluid escaping at high pressure from a very small hole can be almost invisible, and can cause serious injuries.

See a doctor at once if injury results from escaping hydraulic fluid. Serious infection or reaction can develop if proper medical treatment is not given immediately.

FOR SAFETY: When servicing machine, use cardboard to locate leaking hydraulic fluid under pressure.

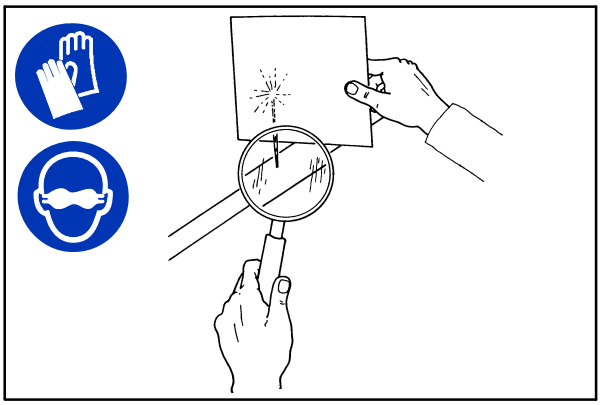

00002

If you discover a fluid leak, contact your mechanic/supervisor.

PROPELLING MOTOR

Torque the shaft nut to 237 Nm (175 ft lb) plus enough torque to align the slotted nut and the shaft hole after the first 50-hours of operation, and every 800 hours there after.

ENGINE

FOR SAFETY: Before leaving or servicing machine, stop on level surface, set parking brake, turn off machine, and remove key.

ENGINE OIL

Check the engine oil level daily. Change the oil and oil filter after every 100 hours of operation.

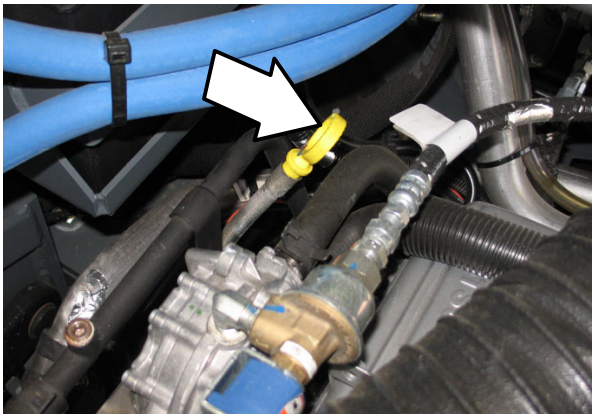

The engine oil drain is located on the engine oil pan. Drain the engine oil when it is warm.

Fill the engine with oil until the oil is between the indicator marks on the dipstick. DO NOT fill past the top indicator mark.

The engine oil capacity for **Mitsubishi engines** is 4.7 L (5 qt) with oil filter.

COOLING SYSTEM

FOR SAFETY: When servicing machine, avoid contact with hot engine coolant. Do not remove cap from radiator when engine is hot. Allow engine to cool.

Check the coolant level in the reservoir daily. The coolant level must be between the two indicator marks when the engine is cold. Refer to the coolant manufacture for water/coolant mixing instructions.

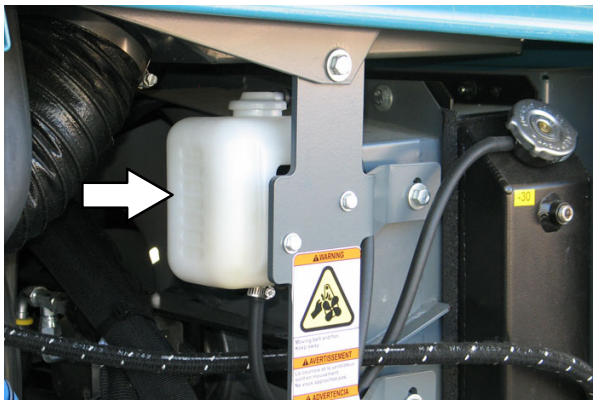

Flush the radiator and the cooling system every 800 hours of operation.

Check the radiator hoses and clamps every 200 hours of operation. Tighten loose clamps. Replace damaged hoses and clamps.

Check the radiator hoses for cracks and deterioration after every 1000 hours of operation.

Check the radiator core exterior / hydraulic cooler fins for debris after every 100 hours of operation. Blow or rinse all dust through the grille and radiator fins, in the opposite direction of normal air flow. Be careful to not bend the cooling fins when cleaning. Clean thoroughly to prevent the fins from becoming encrusted with dust. To avoid cracking the radiator, allow the radiator / cooler fins to cool before cleaning.

FOR SAFETY: When servicing machine, wear eye and ear protection when using pressurized air or water.

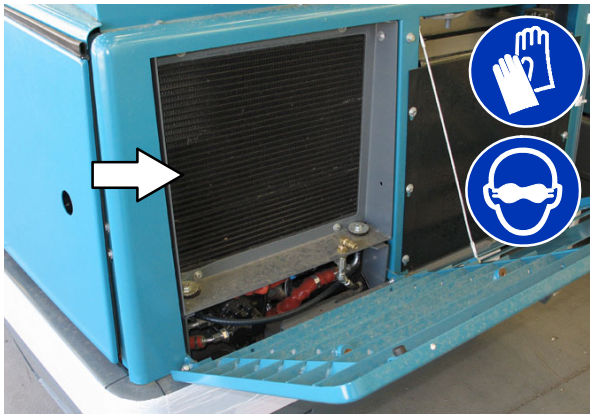

AIR FILTER INDICATOR

Check the indicator daily. The indicator red line will move as the air filter element fills with dirt. Do not replace the air filter element until the red line reaches 5 kPa (20 in H_2O) and the “SERVICE WHEN RED” window is filled with red. The engine must be running to get an accurate air indicator reading.

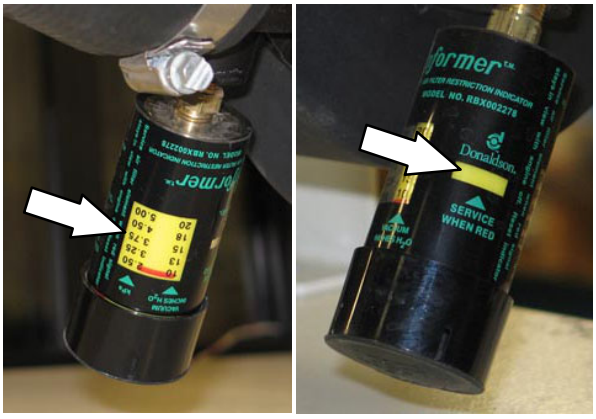

AIR FILTER

Empty the engine air filter dust cap daily.

Clean the air filter element after every 400 hours of operation. Replace the air filter element yearly.

Replace the air filter element when the air filter indicator shows restriction in the air intake system or the filter element is damaged. Refer to *AIR FILTER INDICATOR.*

Remove the filter element. Carefully clean the end cap and the interior of the housing with a damp cloth. Clean the housing sealing surfaces.

Install the filter element into the air filter housing and reinstall the dust cap with the water drain pointing down.

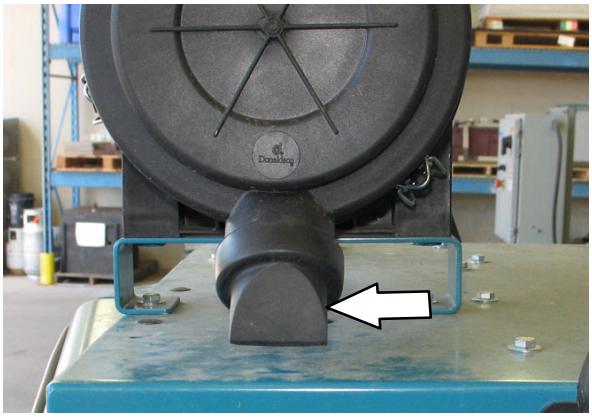

Push the reset button on the end of the indicator to reset the air filter indicator after replacing the air filter element.

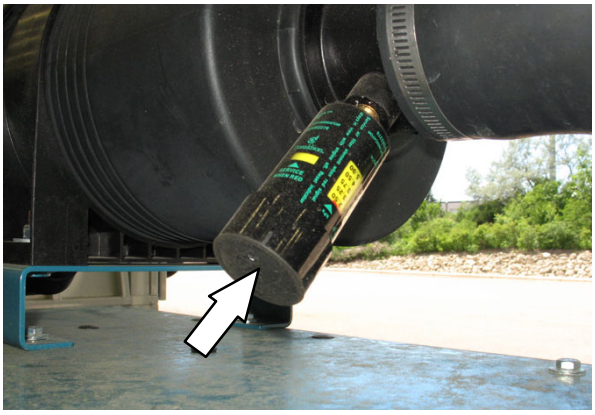

FUEL FILTER (GASOLINE)

Replace the filter element after every 400 hours of operation.

FOR SAFETY: When servicing machine, keep flames and sparks away from fuel system service area. Keep area well ventilated.

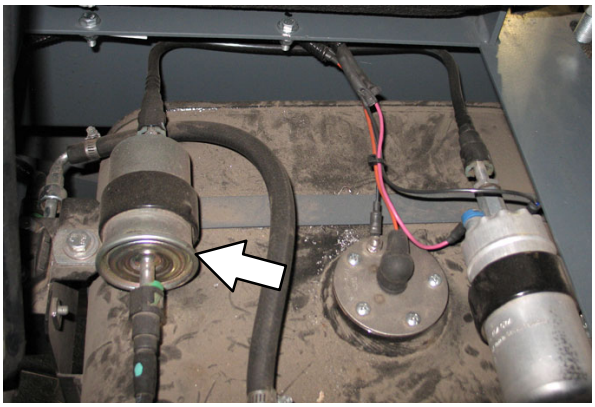

FUEL FILTER (LPG)

Replace the LPG fuel filter after every 400 hours of operation.

Disassemble the fuel lock off valve to access the LPG fuel filter.

FOR SAFETY: When servicing machine, keep flames and sparks away from fuel system service area. Keep area well ventilated.

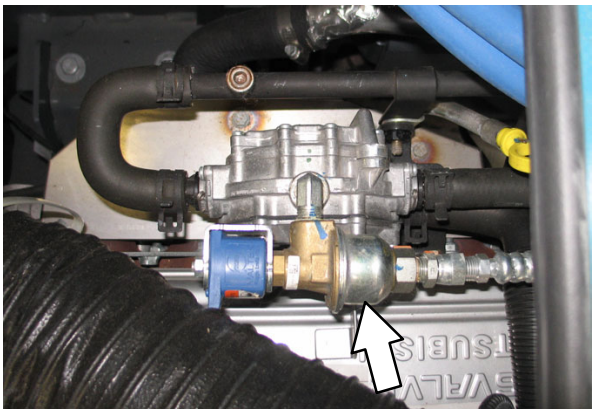

LPG VAPORIZER

Drain oil buildup in the LPG vaporizer after every 100 hours of operation.

FOR SAFETY: When servicing machine, keep flames and sparks away from fuel system service area. Keep area well ventilated.

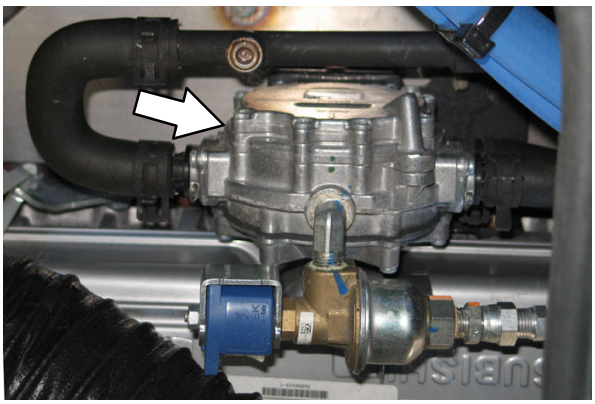

ENGINE BELT

Check the belt tension after every 50 hours of operation. Adjust tension as necessary. Proper belt tension is 13 mm (0.50 in) from a force of 4 to 5 kg (8 to 10 lb) applied at the mid−point of the longest span.

WARNING: Moving belt and fan. Keep away.

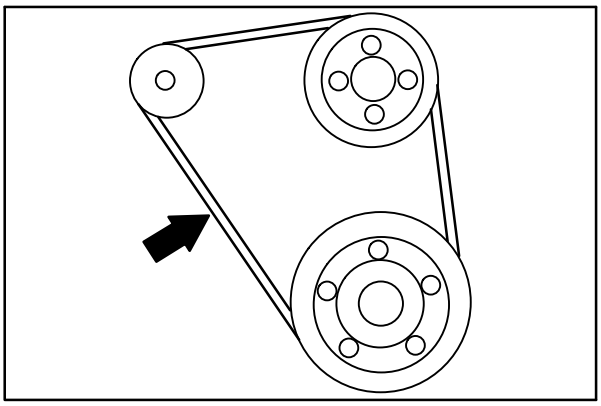

08935

PVC SYSTEM

Inspect the PCV system after every 1000 hours of operation.

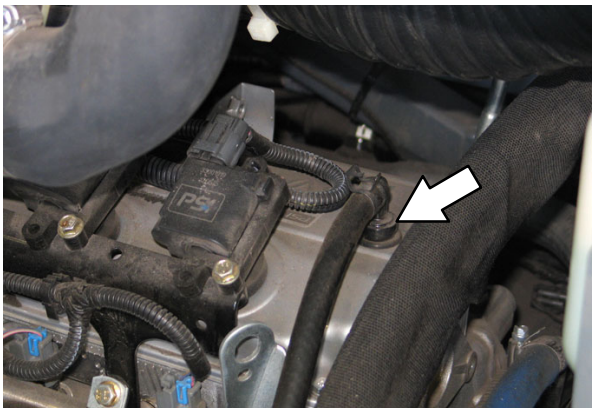

SPARK PLUGS

Clean or replace, and set the gap of the spark plugs every 1000 hours of operation.

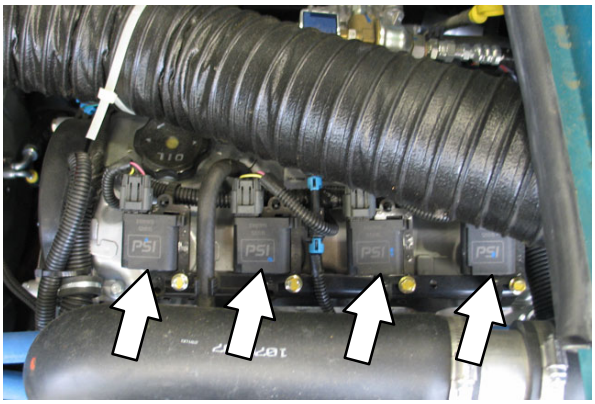

CAMSHAFT AND BALANCE SHAFT BELTS

Replace the camshaft and balance shaft belts after every 5000 hours of operation.

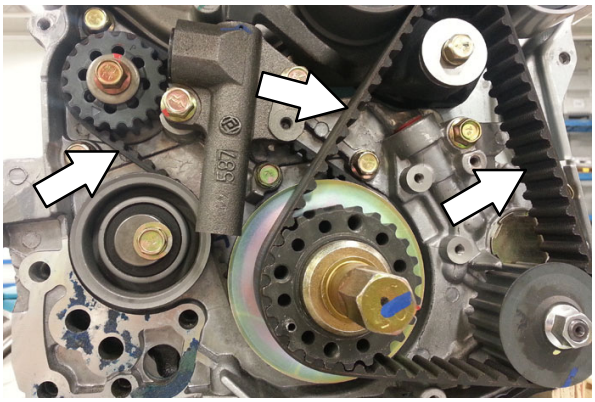

BATTERY

Clean and tighten the battery connections after the first 50 hours of operation and after every 800 hours after that. Do not remove the vent plugs from the battery or add water to the battery.

FOR SAFETY: When servicing machine, avoid contact with battery acid.

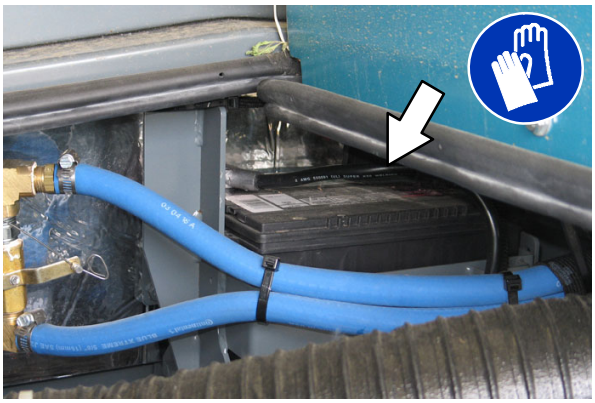

BELTS AND CHAINS

STATIC DRAG CHAIN

A static drag chain prevents the buildup of static electricity in the machine. The chain is attached to the machine by a rear main brush skirt retaining bolt.

Make sure the chain is touching the floor at all times.

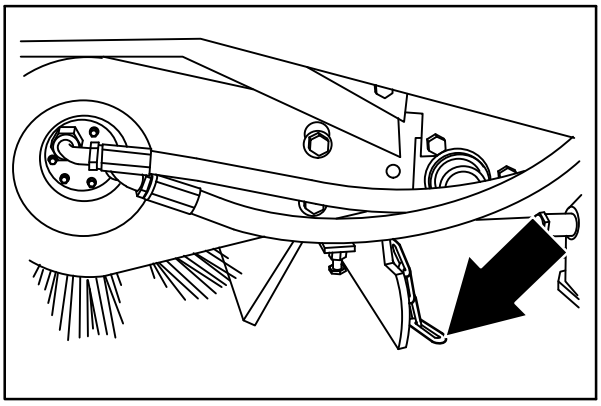

08449

AIR CONDITIONING BELT (OPTION)

The air conditioning belt drives the compressor. The belt deflection should be 4 to 7 mm (0.025 to 0.25 in) when a force of (5 lbs) is applied at belt midpoint.

Check and adjust the belt tension every 100 hours of operation.

WARNING: Moving belt. Keep away.

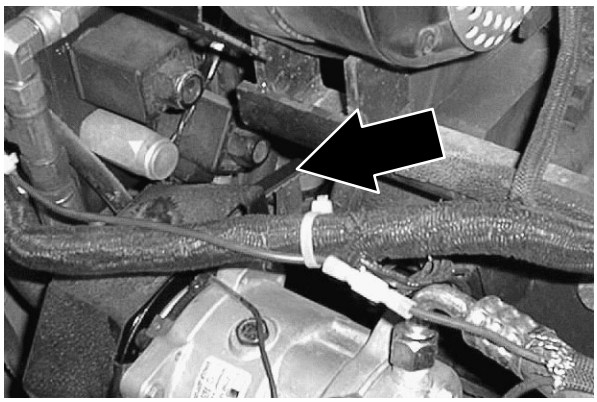

AIR CONDITIONING FILTER (OPTION)

The air conditioning filter should be inspected and cleaned per the cleaning instructions on the side of the filter every 100 hours of operation.

NOTE: In extremely dusty sweeping environments, clean or replace the filter as often as necessary.

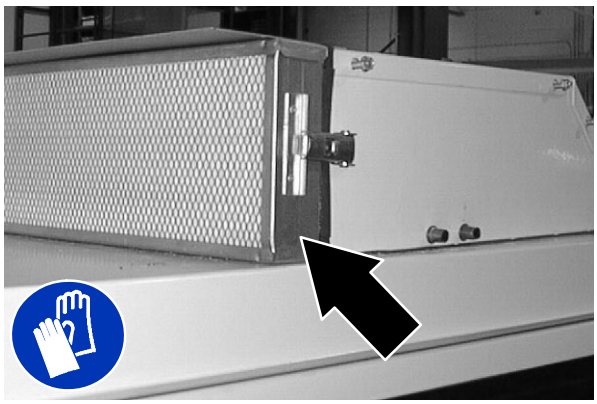

DEBRIS HOPPER

HOPPER DUST FILTER

The dust filters filter the air pulled up from the hopper. The dust filters are equipped with a shaker to remove the accumulated dust particles. The dust filters shaker is operated by the filter shaker switch.

Shake the dust filters before dumping the hopper and at the end of every work shift. Avoid shaking the filters while the hopper is in a rolled out position. Check and clean the dust filters every 50 hours of operation. Extremely dusty conditions may require more frequent cleaning of dust filters.

To clean the dust filters, use one of the following methods:

- SHAKING – Press the filter shaker switch.
- AIR – Blow compressed air through the dust filter from the inside. This may be done with the dust filter in the machine, or for more efficient cleaning remove the dust filter from the machine and the prescreen wrap from the filter element. Always wear eye protection when using compressed air.

  FOR SAFETY: When servicing machine, wear eye and ear protection when using pressurized air or water.

- WATER – Remove the fabric presceen wrap from the filter element. Wash the prescreen wrap in a water and mild detergent solution. Rinse the prescreen wrap until it is clean. Air dry the wet prescreen wrap; do not use compressed air. **NEVER** wash the filter element with water.

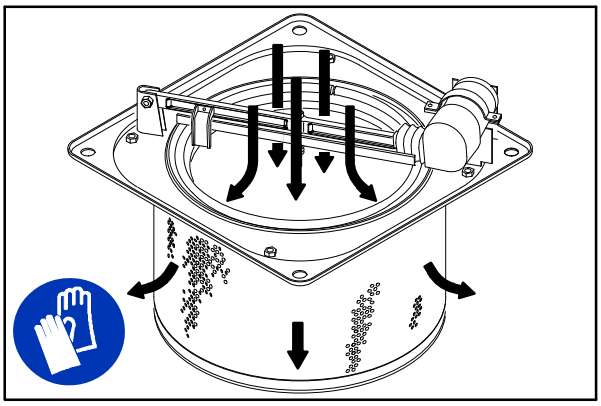

08594

TO REMOVE OR REPLACE HOPPER DUST FILTER

1. Stop the engine and set the machine parking brake.

   FOR SAFETY: Before leaving or servicing machine; stop on level surface, set parking brake, turn off machine and remove key.

2. Open the hopper cover.
3. Disconnect the shaker motor wire connectors.

4. Remove the four retaining screws from the filter shaker frame.

5. Pull the filter shaker frame out of the hopper.

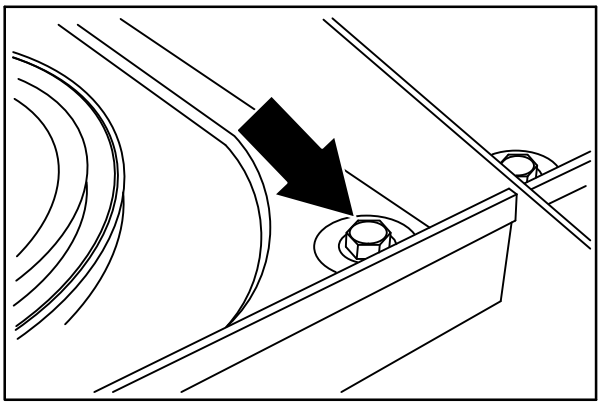

08591

6. Carefully turn over the shaker frame and element.

7. Loosen the four filter retaining screws from the shaker frame.

8. Remove the retainer ring from the shaker frame. Remove the filter.

9. Make sure the prescreen wrap is tightly wrapped around and securely fastened on the new filter element. Put the new filter on the filter shaker frame.

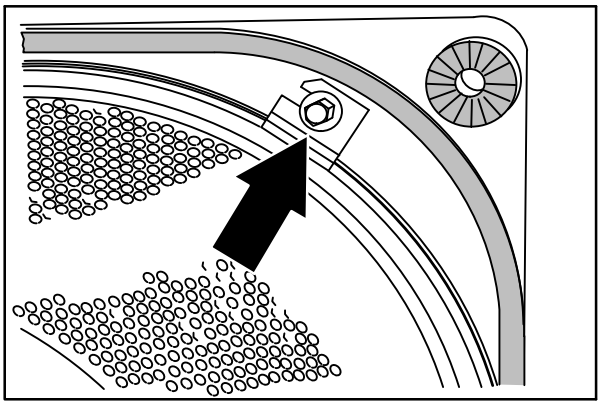

08592

10. Place the retainer ring over the filter. Make sure the retaining ring fits inside the lip of the filter element all the way around. Line up the slots on the retainer ring with the retaining screws holes.

11. Mount using the retaining screws.

12. Check the seal on the shaker frame for damage. Make sure the vibration isolators are mounted in all four corners of the filter shaker frame.

13. Put the filter and shaker frame in the hopper.

14. Install the four retaining screws and tighten.

15. Connect the shaker motor wire connectors.

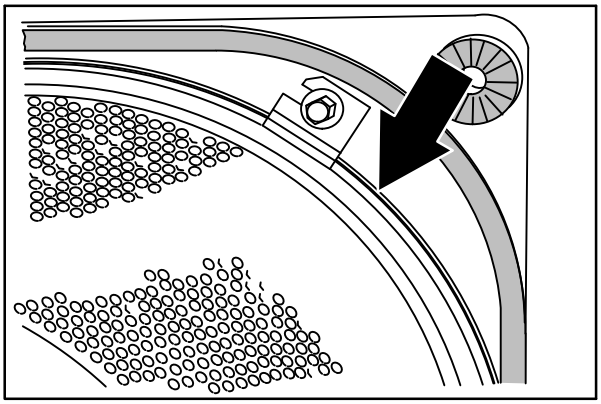

08593

THERMO SENTRY

The Thermo Sentry senses the temperature of the air pulled up from the hopper. If there is a fire in the hopper, the Thermo Sentry stops the vacuum fan and cuts off the air flow. The Thermo Sentry is located on the vacuum fan housing.

Reset the Thermo Sentry by pushing in its reset button.

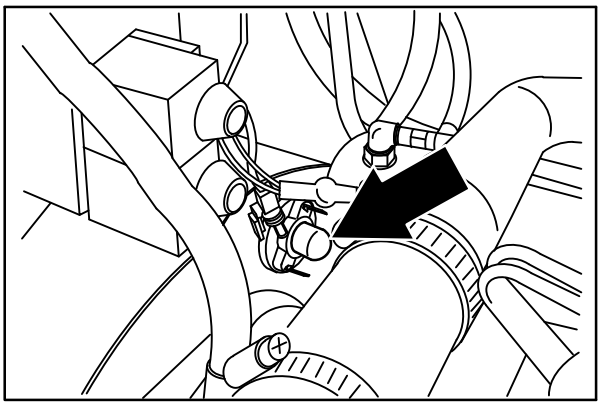

08928

BRUSHES

MAIN BRUSH

The main brush is cylindrical and spans the width of the machine, sweeping debris into the hopper.

Check the brush daily for wear or damage. Remove any string or wire tangled on the main brush, main brush drive hub, or main brush idler hub.

Check the main brush pattern after every 50 hours of operation. The pattern should be 50 to 65 mm (2 to 2.5 in) wide. Adjust the main brush pattern by turning the main brush pressure knob located next to the operator seat.

Rotate the main brush end-for-end every 50 hours of operation for maximum brush life and best sweeping performance.

Replace the brush when it no longer cleans effectively.

TO REPLACE MAIN BRUSH

1. Stop the engine and set the machine parking brake.

   FOR SAFETY: Before leaving or servicing machine; stop on level surface, set parking brake, turn off machine and remove key.

2. Raise the main brush.

3. Open the right side main brush access door.

4. Unlatch and remove the brush idler plate.

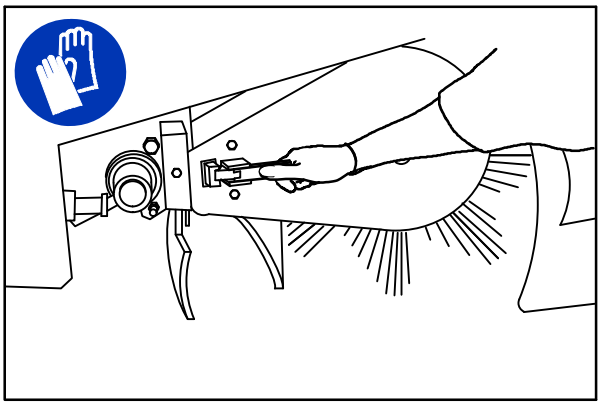

08487

5. Grasp the main brush; pull it off the brush drive plug and out of the main brush compartment.

6. Put the new or rotated end-for-end main brush on the floor next to the access door.

7. Slide the main brush onto the drive plug. Rotate the brush until it engages the drive plug, and push it all the way onto the plug.

8. Slide the main brush idler plate plug onto the main brush.

9. Latch the idler plate onto the machine frame.

10. Close the right side main brush access door.

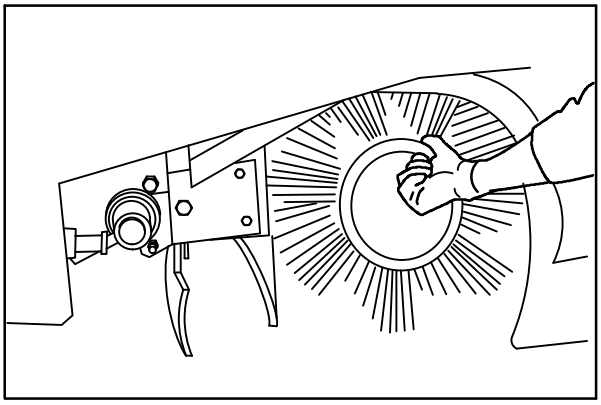

08488

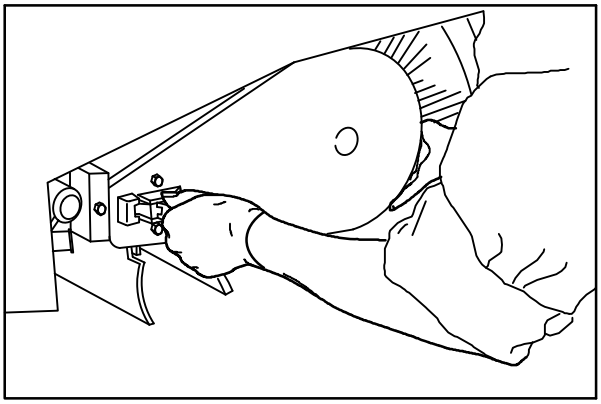

08489

TO CHECK AND ADJUST MAIN BRUSH PATTERN

1. Apply chalk, or some other material that will not blow away easily, to a smooth, level floor.

2. Raise the side brush and main brush and position the main brush over the chalked area.

3. Start the main brush.

4. Lower the main brush for 15 to 20 seconds while keeping a foot on the brakes to keep the machine from moving. This will lower the rotating main brush.

NOTE: If chalk or other material is not available, allow the brushes to spin on the floor for two minutes. A polish mark will remain on the floor.

5. Raise the main brush.

6. Stop the main brush.

7. Drive the machine off the test area.

8. Observe the width of the brush pattern. The proper brush pattern width is 65 to 75 mm (2.5 to 3.5 in).

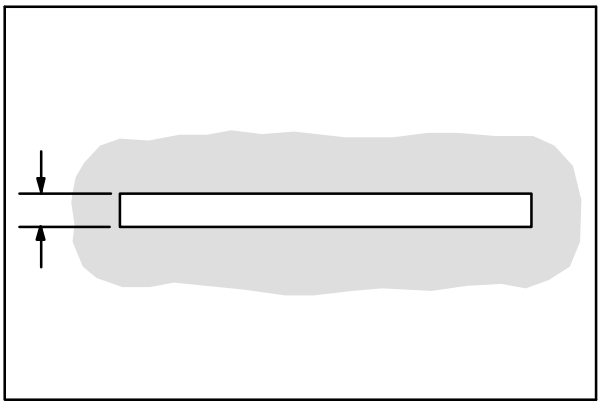

00582

9. To increase the width of the main brush pattern, turn the main brush down pressure knob counter-clockwise.

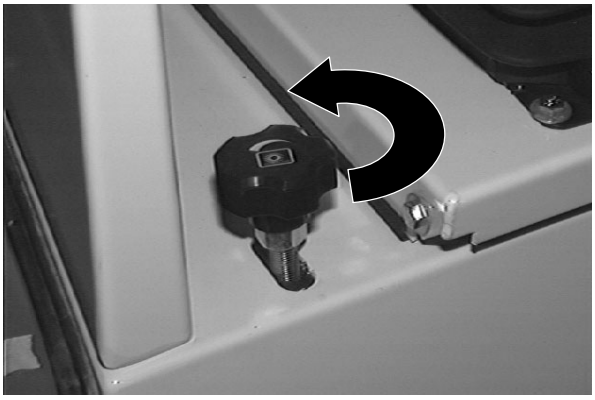

To decrease the width of the main brush pattern, turn the main brush down pressure knob clockwise.

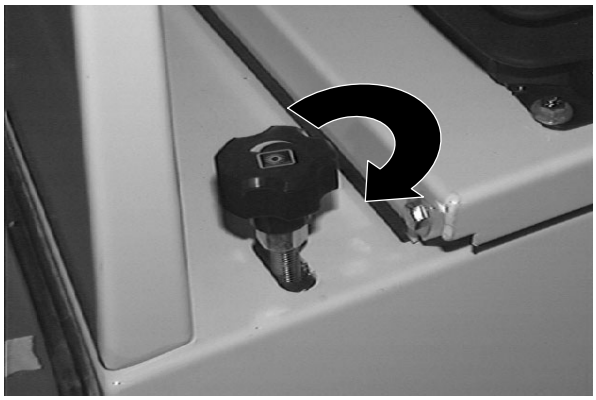

If the main brush pattern is tapered, more than 15 mm (0.5 in) on one end than the other, adjust the taper at the drive end of the brush.

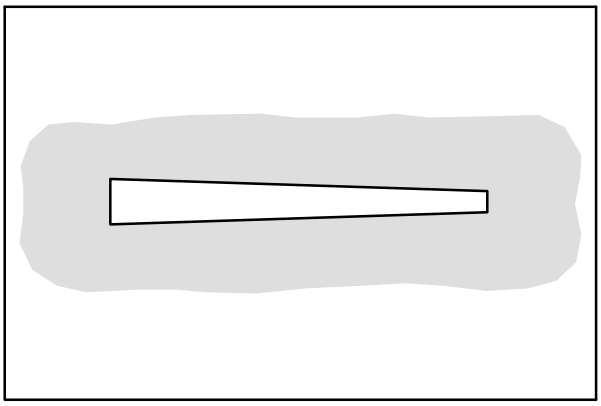

00601

A. Loosen the brush drive end plate mounting bolts.

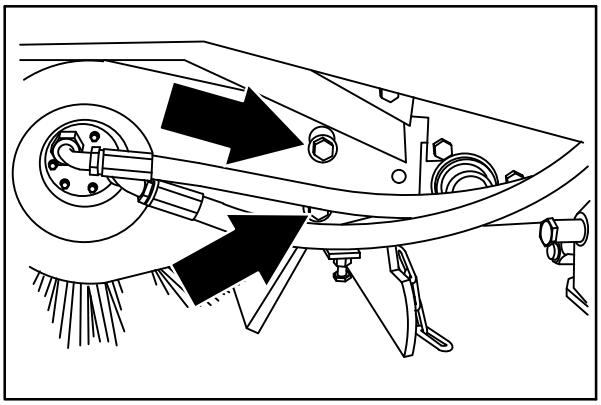

08450

B. Turn the taper adjustment nut counter-clockwise to increase the pattern width at the brush drive end, and clockwise to decrease the pattern width at the brush drive end. Tighten the drive end plate mounting bolts.

C. Check the main brush pattern and readjust as necessary. Then adjust the width of the main brush pattern.

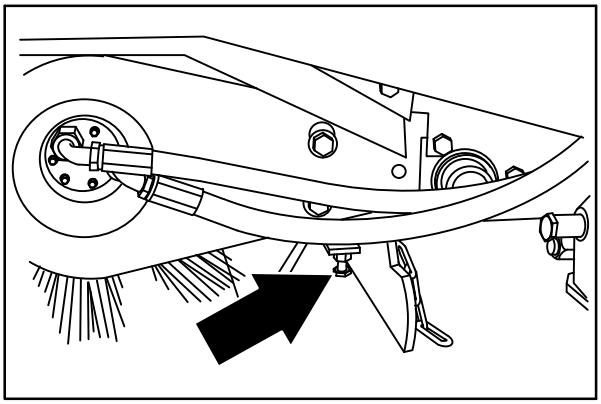

08490

SIDE BRUSH

The side brush sweeps debris along edges into the path of the main brush.

Check the brush daily for wear or damage. Remove any string or wire found tangled on the side brush or side brush drive hub.

Check the side brush pattern daily. The side brush bristles should contact the floor in a 10 o'clock to 3 o'clock pattern when the brush is in motion. Adjust the side brush pattern by the side brush down pressure knob. Turn the knob counter-clockwise to increase the brush contact with the sweeping surface, and clockwise to decrease the brush contact with the sweeping surface.

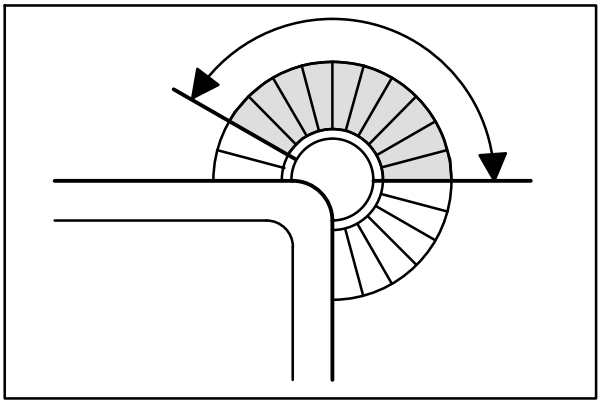

350327

Replace the brush when it no longer cleans effectively.

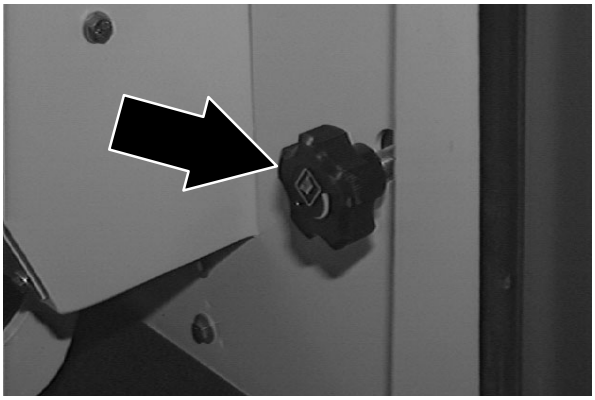

TO REPLACE SIDE BRUSH

1. Empty the debris hopper.
2. Set the machine parking brake.
3. Raise the hopper.
4. Stop the engine.

   FOR SAFETY: Before leaving or servicing machine; stop on level surface, set parking brake, turn off machine and remove key.

5. Remove the side brush retaining pin from the side brush drive shaft.
6. Slide the side brush off the side brush drive shaft.

NOTE: Remove the drive hub and put it on the new brush if one is not installed.

7. Slide the new side brush onto the side brush drive shaft.
8. Insert the side brush retaining pin through the side brush hub and shaft and secure.
9. Disengage the hopper support bar and lower the hopper.
10. Adjust the side brush pattern with the side brush down pressure knob.

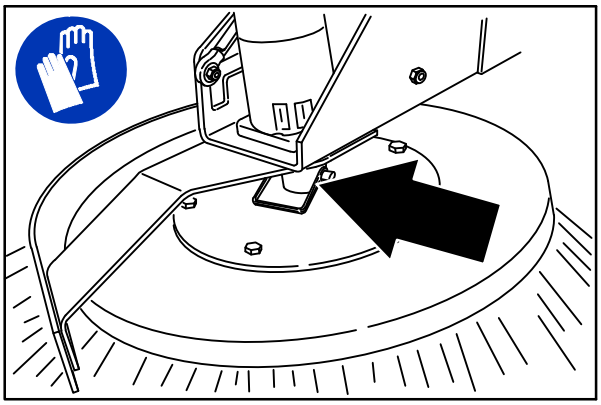

08466

SKIRTS AND SEALS

HOPPER LIP SKIRTS

The hopper lip skirts are located on the bottom rear of the hopper. The skirts float over debris and help deflect that debris into the hopper. The top skirt is segmented.

Check the hopper lip skirts for wear or damage daily.

Replace the hopper lip skirts when they no longer touch the floor.

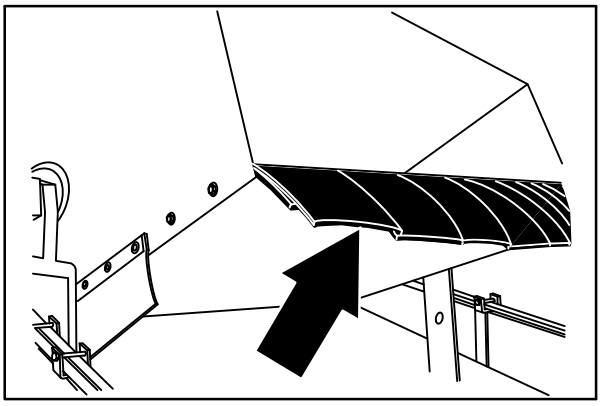

08491

BRUSH COMPARTMENT SKIRTS

The brush compartment skirts are located on the bottom of each of the two main brush doors and around the ends of the brush on the main frame. The inside brush door skirt should touch the floor, and the outside brush door skirt should clear the floor by 3 to 5 mm (0.12 to 0.25 in).

Check the skirts for wear or damage and adjustment daily.

NOTE: The brush door skirts have slotted holes to allow for a ground clearance adjustment. The door must be closed for proper adjustment.

NOTE: Tire pressure will affect skirt clearances.

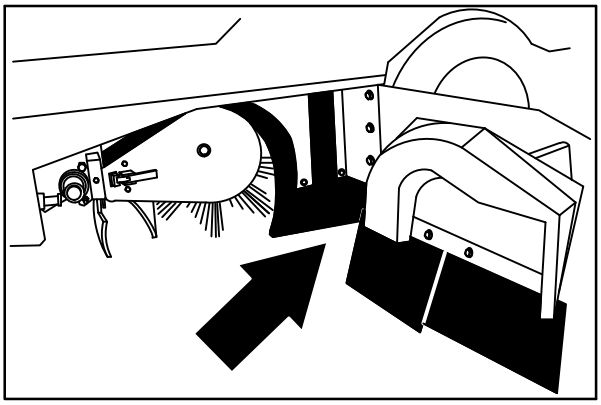

08493

REAR SKIRTS

The two rear skirts are located on the bottom rear of the main brush compartment. The vertical skirt should clear the floor up to 20 mm (0.75 in) in dusty conditions, and touch the floor otherwise. The recirculation skirt is self-adjusting.

Check the skirts for wear or damage and adjustment daily.

NOTE: Tire pressure will affect skirt clearances.

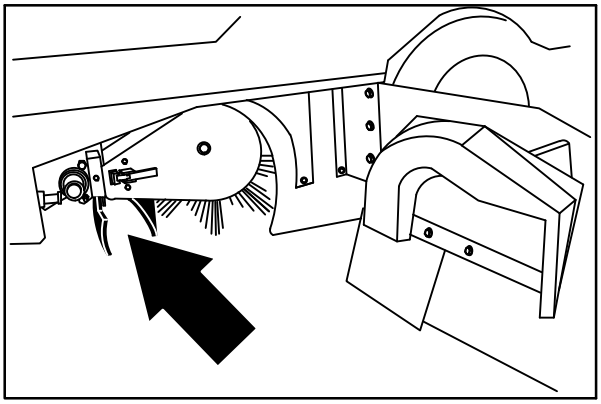

08494

BRUSH DOOR SEALS

The brush door seals are located on both main brush doors and on corresponding portions of the main frame.

Check the seals for wear or damage every 100 hours of operation.

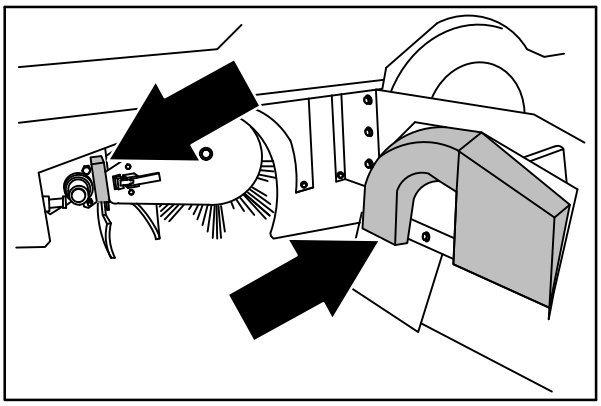

08495

HOPPER SEALS

The hopper seals are located on the top and side portions of the machine frame that contact the hopper.

Check the seals for wear or damage every 100 hours of operation.

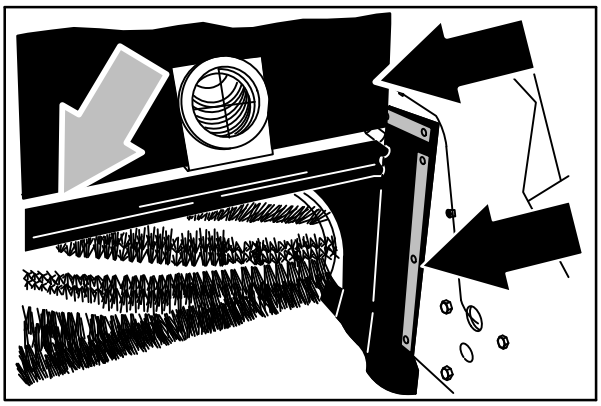

08496

HOPPER DOOR SEALS

The hopper door seals are located on the hopper door. They seal the hopper when the hopper door is closed.

Check the seals for wear or damage every 100 hours of operation.

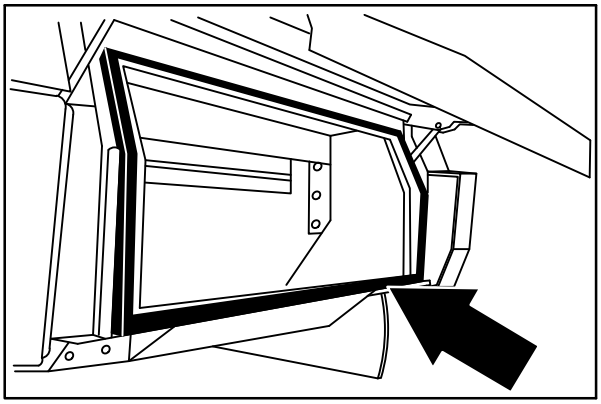

08497

HOPPER SIDE SKIRT

The hopper side skirt is located on the left side of the hopper.

Check the hopper side skirt for wear or damage daily.

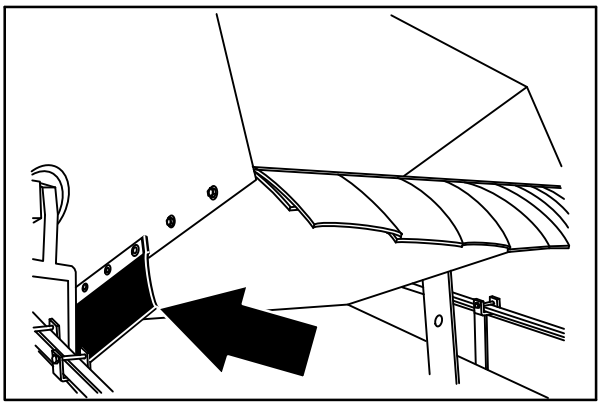

08492

HOPPER DUST SEAL

The hopper dust seal is located inside the hopper. It seals the hopper filter compartment.

Check the seal for wear or damage every 100 hours of operation.

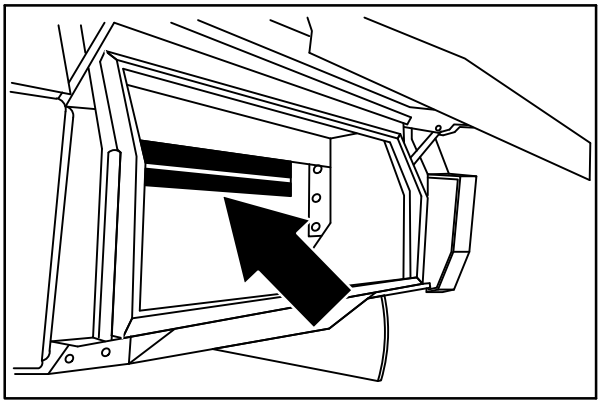

08498

HOPPER COVER SEAL

The hopper cover seals are located on the inside of the hopper cover. They seal the hopper filter compartment.

Check the seal for wear or damage every 100 hours of operation.

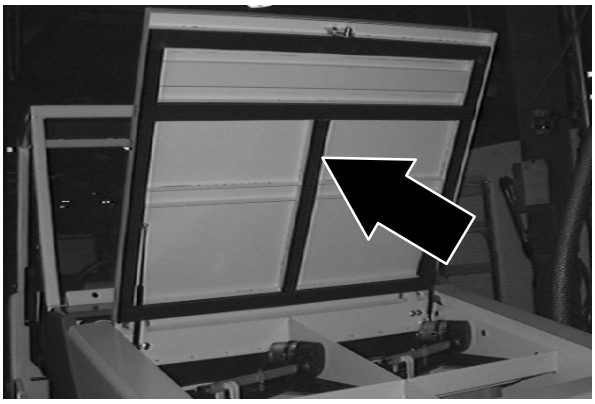

HOPPER VACUUM FAN SEAL

The hopper vacuum fan seal is mounted on the the vacuum fan inlet bracket.

Check the seal for wear or damage every 100 hours of operation.

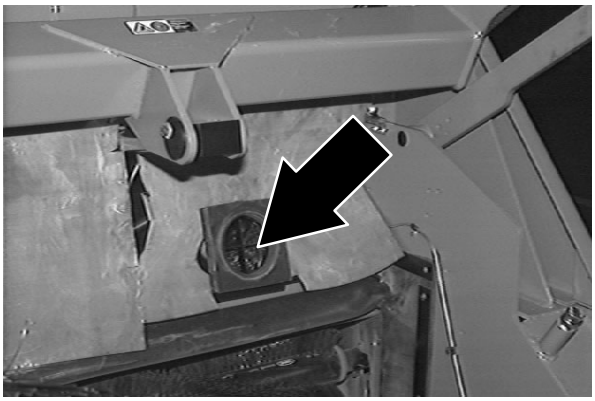

BRAKES AND TIRES

SERVICE BRAKES

The hydraulic service brakes are located on the front wheels.

The master brake cylinder is located on the fire wall.

Check the master brake cylinder fluid level every 400 hours of operation.

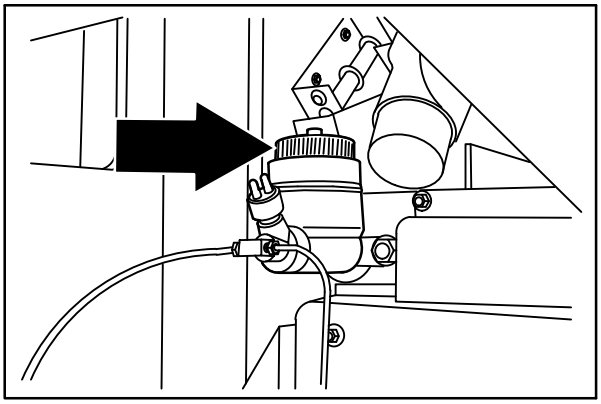

08501

PARKING BRAKE

Adjust the parking brake whenever it becomes very easy to set, when the machine rolls after setting it, and after every 200 hours of operation.

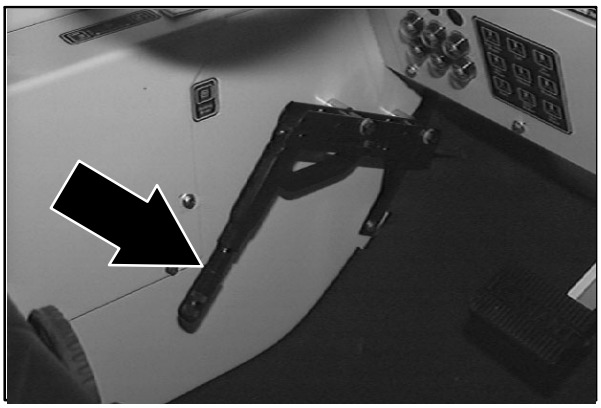

TIRES

The standard machine tires are pneumatic.

Check the tire pressure every 100 hours of operation. The proper tire air pressure is 690 – 758 kPa (100 – 110 psi).

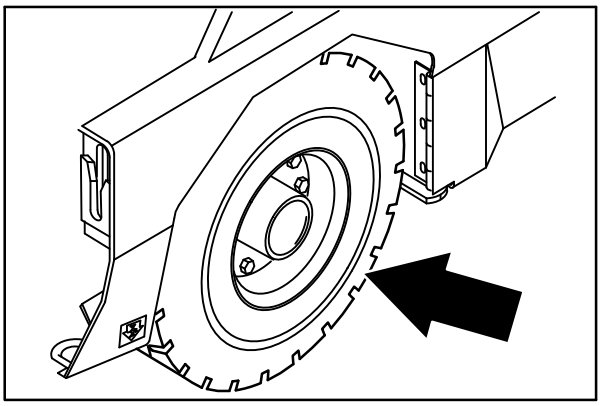

08575

FRONT WHEEL

Torque the front wheel nuts twice in the pattern shown to 169 to 183 Nm (125 to 135 ft lb) after the first 50-hours of operation, and every 800 hours there after.

REAR WHEEL

Torque the rear wheel nuts twice in the pattern shown to 163 to 176 Nm (120 to 130 ft lb) after the first 50-hours of operation, and every 800 hours there after.

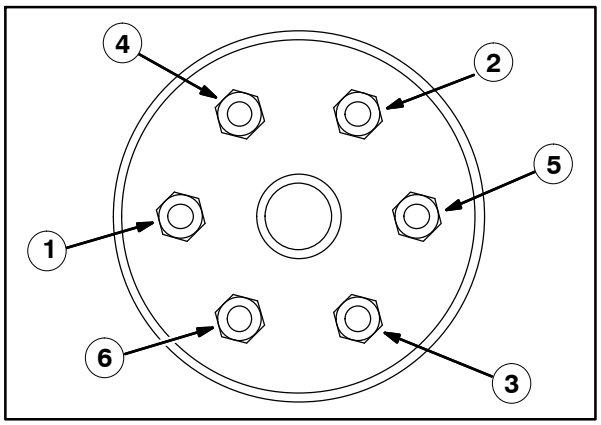

PUSHING, TOWING, AND TRANSPORTING THE MACHINE

PUSHING OR TOWING THE MACHINE

If the machine becomes disabled, it can be pushed from the front or rear, but towed only from the rear.

The propelling pump has a bypass valve to prevent damage to the hydraulic system when the machine is being pushed or towed. This valve allows a disabled machine to be moved for a *very short distance* and at a speed to not exceed 1.6 kp/h (1 mph). The machine is NOT intended to be pushed or towed a long distance or at a high speed.

ATTENTION! Do not push or tow machine for a long distance and without using the bypass valve, or the machine hydraulic system may be damaged.

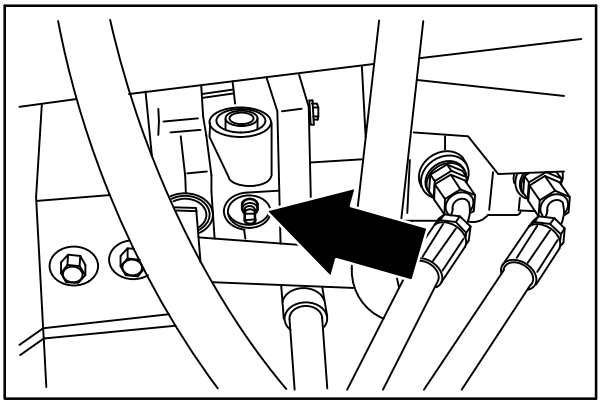

08576

Turn the bypass valve 90° from the normal position before pushing or towing the machine. **The illustration shows the bypass valve in the pushing or towing position.**

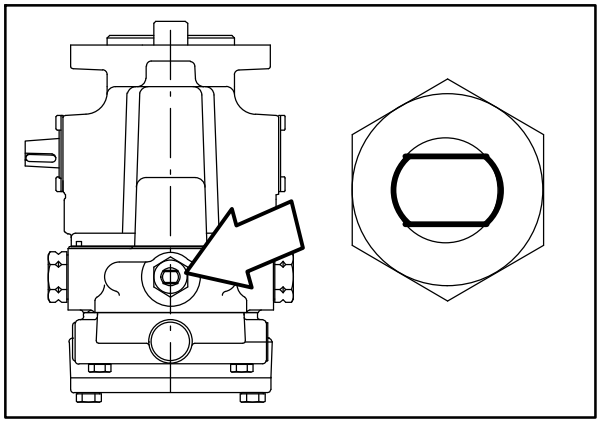

TRANSPORTING THE MACHINE

1. Position the rear of the machine at the loading edge of the truck or trailer.

   FOR SAFETY: Use truck or trailer that will support the weight of the machine.

NOTE: Empty the hopper before transporting the machine.

2. If the loading surface is not horizontal or is higher than 380 mm (15 in) from the ground, use a winch to load machine.

   If the loading surface is horizontal AND is 380 mm (15 in) or less from the ground, the machine may be driven onto the truck or trailer.

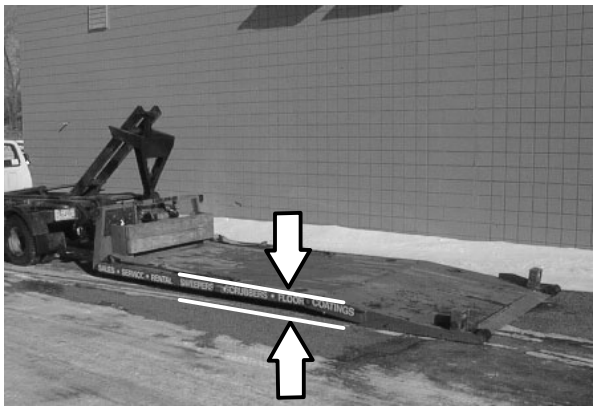

3. To winch the machine onto the truck or trailer, attach the winching chains to the rear tie down locations.

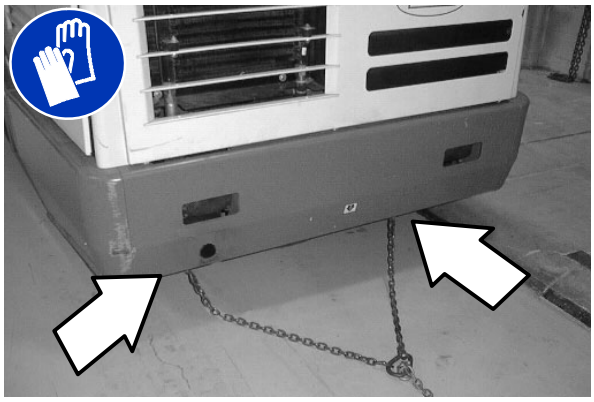

   The rear tie-down locations are through the U–bolt section of the main frame under the side bumpers toward the rear.

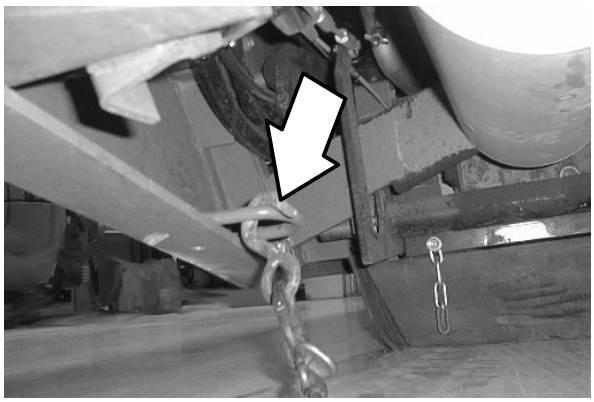

4. Turn the bypass valve 90° from the normal position before winching the machine onto the truck or trailer. See *PUSHING OR TOWING THE MACHINE* section of this manual. Make sure the machine is centered.

   FOR SAFETY: When loading machine onto truck or trailer, use winch. Do not drive the machine onto the truck or trailer unless the loading surface is horizontal AND is 380 mm (15 in) or less from the ground.

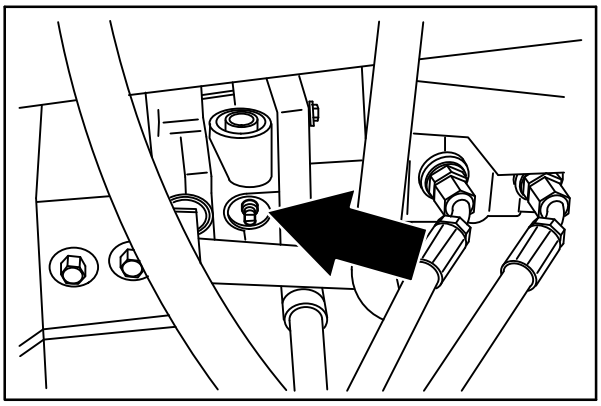

08576

5. Position the machine onto the truck or trailer as far as possible. If the machine starts to veer off the center line of the truck or trailer, stop and turn the steering wheel to center the machine.

6. Set the parking brake and block the machine tires. Tie down the machine to the truck or trailer before transporting.

   The two front tie−down locations are through the U−bolt section of the main frame in front of the wheels.

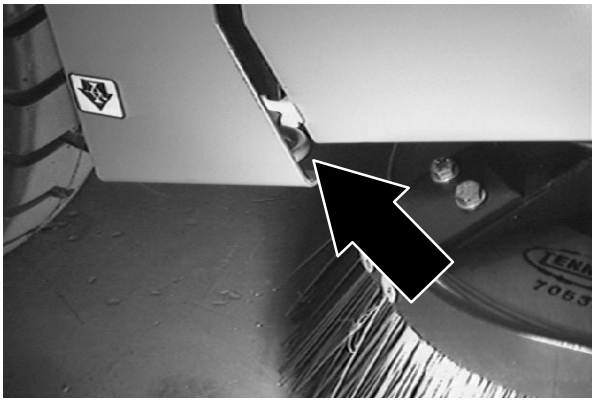

   The two rear tie−down locations are through the U−bolt section of the main frame under the side bumpers toward the rear.

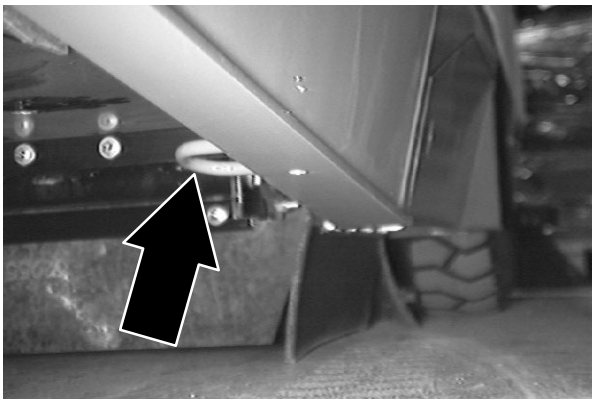

7. If the loading surface is not horizontal or is higher than 380 mm (15 in) from the ground, use a winch to unload machine.

   If the loading surface is horizontal AND is 380 mm (15 in) or less from the ground, the machine may be driven off the truck or trailer.

   FOR SAFETY: When unloading machine off truck or trailer, use winch. Do not drive the machine off the truck or trailer unless the loading surface is horizontal AND 380 mm (15 in) or less from the ground.

MACHINE JACKING

Empty the hopper before jacking the machine. You can jack up the machine for service at the designated locations. Use a jack or hoist that will support the weight of the machine. Always stop the machine on a flat, level surface and block the tires before jacking the machine up.

The front jacking locations are the flat bottom edge of the machine frame next to the front tires.

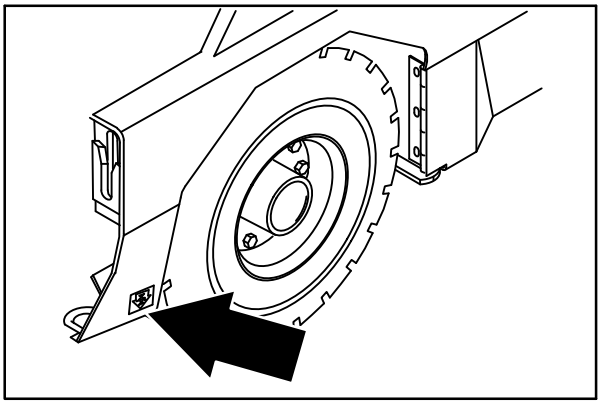

08485

The rear jacking location is the middle of the rear bumper.

FOR SAFETY: When servicing machine, block machine tires before jacking machine up.

FOR SAFETY: When servicing machine, jack machine up at designated locations only. Block machine up with jack stands.

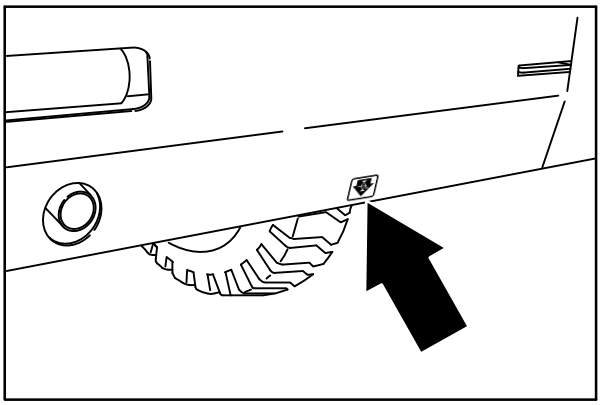

08586

STORING MACHINE

Before storing the machine for an extended period of time, the machine needs to be prepped to lessen the chance of rust, sludge, and other undesirable deposits from forming. Contact TENNANT service personnel.

SPECIFICATIONS

GENERAL MACHINE DIMENSIONS/CAPACITIES

Item	Dimension/capacity
Length	3050 mm (120 in)
Width	1780 mm (70 in)
Height (top of air cleaner)	1875 mm (73.8 in)
Height with overhead guard	2095 mm (82.5 in)
Height with overhead guard and hazard light	2310 mm (91 in)
Height with cab	2095 mm (82.5 in)
Height with cab & air conditioner	2257 mm (89 in)
Height with cab and hazard light	2310 mm (91 in)
Track	1560 mm (61.5 in)
Wheelbase	1420 mm (56 in)
Main brush diameter	405 mm (16 in)
Main brush length	1270 mm (50 in)
Side brush diameter	65 mm (26 in)
Sweeping path width	1270 mm (50 in)
Sweeping path width with side brush	1675 mm (66 in)
Sweeping path width with dual side brushes (Option)	2100 mm (82 in)
Main brush pattern width	50 to 65 mm (2.0 to 2.5 in)
Hopper weight capacity	907.2 kg (2000 lb)
Hopper volume capacity	849.5 L (30 cu ft)
Dust filter area	17.7 m^2 (190 sq ft)
GVWR	4068 kg (8970 lb)
Ceiling height minimum dumping clearance	3355 mm (11 ft)
Protection Grade	IPX3

Values determined as per IEC 60335–2–72	Measure
Sound pressure level L_{pA}	84 dB(A)
Sound uncertainty K_{pA}	3.0 dB(A)
Sound power level L_{WA} + Uncertainty K_{WA}	106 dB(A)
Vibration – Hand–arm	< 2.5 m/s^2
Vibration – Whole body	< 0.5 m/s^2

GENERAL MACHINE PERFORMANCE

Item	Measure
Maximum forward speed	16 kmh (10 mph)
Maximum reverse speed	7.3 kmh (4.5 mph)
Minimum aisle turn width, left	3450 mm (135 in)
Minimum aisle turn width, right	4675 mm (184 in)
Maximum rated climb and descent angle (Sweeping)	15%
Maximum rated climb and descent angle with empty hopper	27%
Maximum ambient temperature for machine operation	43° C (110° F)
Minimum ambient temperature for machine operation	0° C (32° F)

POWER TYPE

Engine	Type	Ignition	Cycle	Aspiration	Cylinders	Bore	Stroke
Mitsubishi 2.4	Piston	Coil @ Plug	4	Natural	4	86.5 mm (3.40 in)	100 mm (3.93 in)
	Displacement		Tennant machine governed net power			Engine mfg un–governed net power	
	2350 cc (142.7 cu in)		Gas – 42.6 kW (57.1 Hp) @ 2400 rpm LPG – 42.0 kW (56.3 Hp) @ 2400 rpm			Gas – 49.8 kw (66.8 hp) @ 2800 rpm LPG – 47.1 kw (63.2 hp) @ 2800 rpm	
	Fuel		Cooling system			Electrical system	
	Gasoline, 87 octane minimum, unleaded Fuel tank: 45.5 L (12 gal)		Water/ethylene glycol antifreeze			12 V (1.2 kW) nominal	
	LPG, Fuel tank: 15 kg (33 lb)		Total: 7.5 L (2 gal) Radiator: 3.8 L (1 gal)			90 A (12 V) alternator	
	Idle speed, no load		(Fast) governed speed, under load			Firing order	
	1350 ± 50 rpm		2400 ± 50 rpm			1–3–4–2	
	Spark plug gap		Valve clearance, cold			Engine lubricating oil with filter	
	1.1 mm (0.043 in)		No Adjustment OHC Engine			4.7 L (5 qt) 5W30 SAE–SG/SH	

STEERING

Type	Power source	Emergency steering
Rear wheel, hydraulic cylinder and rotary valve controlled	Hydraulic accessory pump	Manual

HYDRAULIC SYSTEM

System	Capacity	Fluid Type
Hydraulic reservoir	47.3 L (12.5 gal)	ISO Grade 100 – above 7° C (45° F) ISO Grade 32 – below 7° C (45° F)
Hydraulic total	56.8 L (15 gal)	

BRAKING SYSTEM

Type	Operation
Service brakes	Hydraulic drum brakes (2), one per front wheel, foot brake master cylinder activated
Parking brake	Utilize service brakes, cable actuated

TIRES

Location	Type	Size	Pressure
Front (2)	Pneumatic	6.5 x 23.5 in	690 – 758 kPa (100 – 110 psi)
Rear (1)	Pneumatic	6.5 x 23.5 in	690 – 758 kPa (100 – 110 psi)

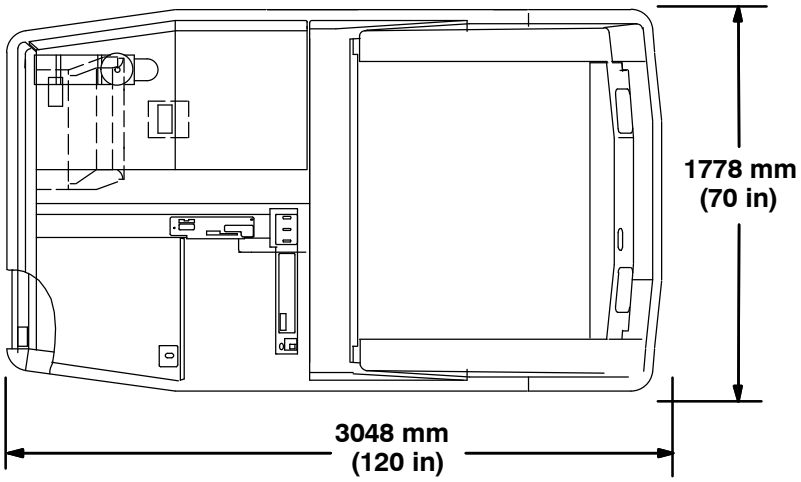

TOP VIEW

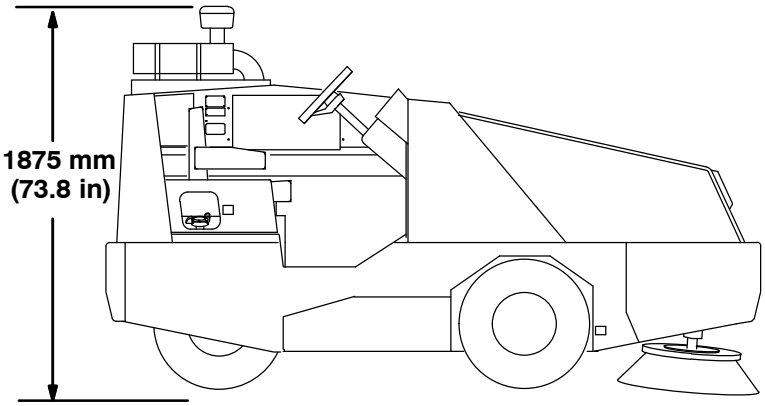

SIDE VIEW

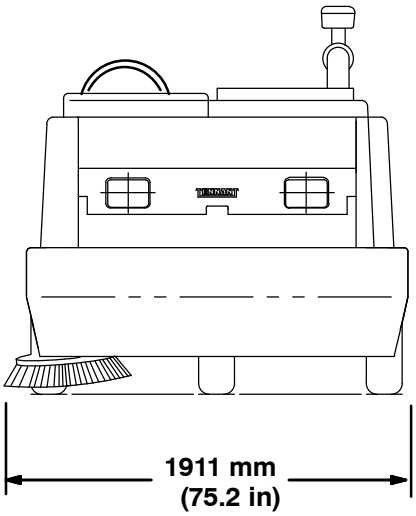

FRONT VIEW

08774

MACHINE DIMENSIONS

A

Air conditioning system (option)
belt, 69
filter, 69
switch, 31

Air control vents (option), 31

Air filter
dust cap, 64
element, 64

Air filter indicator, 64

Air filter system, 64

Aisle turn, 87

B

Battery, 68
charging system light, 18

Belts, 69
air conditioning (option), 69
engine fan belt, 67

Brake pedal, 13

Brake, parking, 80

Brakes, 34, 80
service, 80
system specifications, 88

Brush door skirts, 77

Brush doors, latch, 28

Brush information, 32

Brushes, 72
adjusting main brush taper, 75
checking main brush pattern, 73
checking side brush pattern, 76
door seals, 78
main brush, 72
main brush minimum bristle length, 72
Maintenance, 34
replacing main brush, 72
replacing side brush, 76
side brush, 76
side brush minimum bristle length, 76

Bypass valve, 82

C

Camshaft and balance shaft belts, 68

Capacities, 86

Chain, static drag, 69

Chains, 69

Check engine light, 23

Circuit breakers, 26

Control panel
charging system light, 18
clogged filter light, 19
engine oil pressure light, 18
engine water temperature light, 18
fuel level gauge, 20
hopper door light (option), 19
hopper temperature light, 18
hourmeter, 20
main brush shut down light, 19

Control panel symbols, 8

Controls, 10
air conditioning switch (option), 31
air control vents (option), 31
brake pedal, 13
Check engine light, 23
directional pedal, 12
dome light switch, 30
engine speed switch, 22
fan speed switch (option), 31
filter shaker switch, 21
Fuses, 27
hazard light switch (option), 20
heater knob, 30
hopper door lever, 15
hopper lift lever, 17
hopper rollout lever, 16
horn button, 17
ignition switch, 23
main brush down pressure knob, 28
main brush switch, 24
operating lights switch, 21
operation, 12
parking brake, 13
side brush down pressure knob, 14
side brush switch, 14
steering wheel, 25
steering wheel tilt lever, 25
vacuum fan switch, 21
windshield wiper switch (option), 30

D

Debris hopper, 70

Dimensions, 86

Directional pedal, 12
toe adjustment, 13

Dome light switch, 30

Dust filter, 70
cleaning, 70
replacement, 70

E

Electrical system
circuit breakers, 26
Fuses, 27
ignition switch, 23
spark plugs, 67

Engine, 63
Air filter, 34, 64
air filter indicator, 64
Camshaft and balance shaft belts, 68
Coolant level, 34
cooling system, 63
fan belt, 67
fuel filter (gasoline), 66
fuel filter (lpg), 66
Fuel level, 34
LPG vaporizer, 66
lubrication, 63
oil capacity, 63
Oil level, 34
oil pressure light, 18
PVC system, 67
spark plugs, 67
specifications, 87
speed switch, 22
water temperature light, 18

Engine cover, latch, 28

Engine side door, latch, 28

F

Fan speed switch (option), 31

Filter, air conditioning (option), 69

Filter shaker switch, 21

Filters
hopper dust, 70
hopper dust filter replacement, 70
hopper filter cleaning, 70
Regenerative Filter System (RFS) (option), 54

Front wheel, 81

Fuel filter (GASOLINE), 66

Fuel filter (LPG), 66

Fuel level gauge, 20

Fuel tank, changing LPG tank, 35 - 36

Fuses, 27

H

Hazard light switch, 20

Heater knob, 30

Hopper, 70
changing dust filter, 70
clogged filter light, 19
cover seal, 79
door lever, 15
door light (option), 19
door seals, 78
dust filter, 70
dust seal, 79
emptying, 42
filter cleaning, 70
filter shaker, 21
lift lever, 17
lip skirts, 77
rollout lever, 16
seals, 78
side skirt, 79
support bar, 29
support bar disengagement, 48
support bar engagement, 46
Thermo Sentry, 18, 72
vacuum fan seal, 79

Hopper cover, latch, 28

Hopper door, operation, 15

Hopper door lever, 15

Hopper lift lever, 17

Hopper rollout lever, 16

Hopper support bar, 29

Horn button, 17

Hourmeter, 20

Hydraulic cooler, Fins, 34

Hydraulic fluid, 61

Hydraulic fluid reservoir, 60

Hydraulic hoses, 62

Hydraulic system
fluid, 61
fluid filter, 61
fluid level, 60
fluid reservoir, 60
propelling motor, 62

Hydraulics
Fluid level, 34
hoses, 62
system specifications, 88

I

Ignition switch, 23

J

Jack points, 85

K

Knobs
heater, 30
main brush down pressure, 28
side brush down pressure, 14

L

Latches, 28
engine cover, 28
engine side door, 28
hopper cover, 28
main brush doors, 28
rear bumper door, 28
rear door, 28

Levers
hopper door, 15
hopper lift, 17
hopper rollout, 16
parking brake release, 13
steering wheel tilt, 25

Lights
battery charging system, 18
Check engine, 23
clogged filter, 19
engine oil pressure, 18
engine water temperature, 18
hopper door (option), 19
hopper temperature, 18
main brush shut down, 19

LPG, changing fuel tank, 35

LPG fuel tank, changing, 35

LPG vaporizer, 66

Lubrication
engine, 63
front wheel bearings, 59
main brush adjustment, 60
rear wheel support, 59
side brush pivot pins, 59

M

Machine components, 7

Machine dimensions, 89

Machine jacking, 85

Machine storage, 85

Machine tie down location, 84

Machine troubleshooting, 55

Main brush, 72
adjusting taper, 75
checking brush pattern, 73
door seals, 78
door skirts, 77
down pressure knob, 28
information, 32
maintenance, 72
replacement, 72
shut down light, 19
switch, 24

Main brush adjustment, lubrication, 60

Main brush down pressure knob, 28

Main brush switch, 24

Maintenance chart, 56

Motors, propelling, 62

O

Oil capacity, engine, 63

Operating lights switch, 21

Operation
hopper emptying, 42
how the machine works, 33
pre-operation checklist, 34
starting the machine, 36
stop sweeping, 41
stopping the machine, 44
sweeping, 39 - 40

Operation of controls, 12

Operator seat, 29

Options, 50
air conditioning switch, 31
air control vents, 31
dome light switch, 30
fan speed switch, 31
hazard light switch, 20
heater knob, 30
hopper door light, 19
Regenerative Filter System (RFS), 54
vacuum wand, 50
windshield wiper switch, 30

P

Parking brake, 13
adjustment, 80

Pedals
brake, 13
directional, 12

Pushing machine, 82

Pushing or towing the machine, 82

Pushing, towing, and transporting machine, 82

PVC system, 67

R

Radiator, 64
- coolant level, 63
- Fins, 34
- flushing the system, 63
- hoses, 63

Rear bumper door latch, 28

Rear door latch, 28

Rear wheel, 81

Rear wheel support, lubrication, 59

Regenerative Filter System (RFS) (option), 54

S

Safety
- hopper support bar disengagement, 48
- hopper support bar engagement, 46
- Labels, 5
- precautions, 3

Seals, 77
- brush door, 78
- hopper, 78
- hopper cover, 79
- hopper door, 78
- hopper vacuum fan, 79
- hopper, dust, 79

Seat, operator, adjustment, 29

Service records, 34

Side brush, 76
- checking brush pattern, 76
- down pressure knob, 14
- information, 32
- minimum bristle length, 76
- replacement, 76
- switch, 14

Side brush pivot pins, lubrication, 59

Skirts, 77
- brush door, 77
- hopper Lip, 77
- hopper, side, 79
- rear, 77

Skirts and seals, 34

Spark plugs, 67

Specifications
- braking system, 88
- climb & descent angle, 87
- dumping clearance height, 86
- hydraulic system, 88
- machine capacities, 86
- machine dimensions, 86
- machine performance, 87
- power type, 87
- steering, 87
- tires, 88

Speed switch, engine, 22

Static drag chain, 69

Steering, 34
- specifications, 87

Steering wheel, 25

Steering wheel tilt lever, 25

Storing machine, 85

Sweeping, 39

Switches
- air conditioning (option), 31
- dome light (options), 30
- engine speed, 22
- fan speed (option), 31
- filter shaker, 21
- hazard light (option), 20
- ignition, 23
- main brush, 24
- operating lights, 21
- side brush, 14
- vacuum fan, 21
- windshield wiper (option), 30

T

Thermo Sentry, 72

Tie down location, 84

Tires, 80
- Front wheel, 81
- pressure, 81
- rear wheel, 81
- specifications, 88

Towing machine, 82

Transporting machine, 82

Transporting the machine, 83

Travel speed, 87

Troubleshooting, 55

V

Vacuum fan switch, 21
Vacuum wand (option), 50
Vents, air control, 31

W

Wheel bearings, front, lubrication, 59
While operating the machine, 38
Windshield wiper switch, 30