S680

Battery Rider Sweeper

Parts Manual

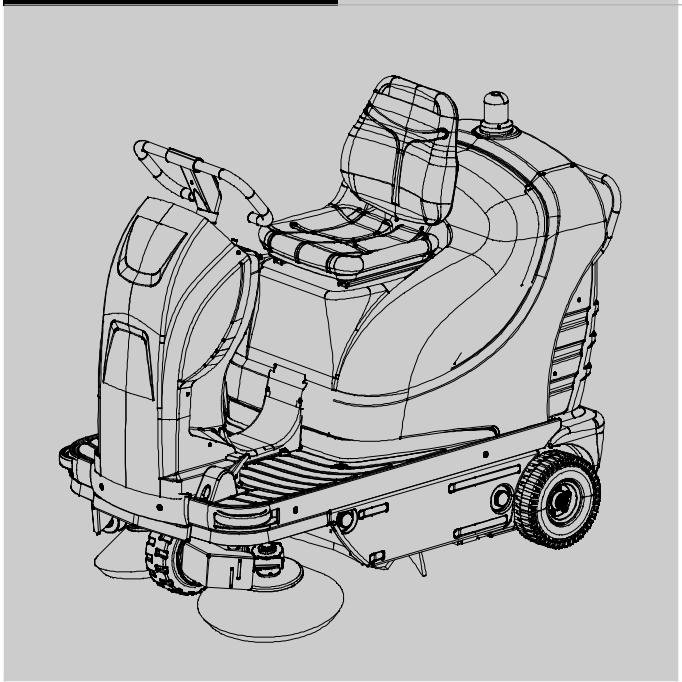

Tennant*True*® Parts

Global

To view, print or download
the parts manual, visit:

www.tennantco.com/manuals

9022566
Rev. 03 (06-2026)

Only use TENNANT Company supplied or equivalent parts. Parts and supplies may be ordered online, by phone or from any Tennant Authorized Service Center or Distributor.

Before Ordering any parts or supplies, be sure to have the machine model number and serial number available.

Serial Number Location

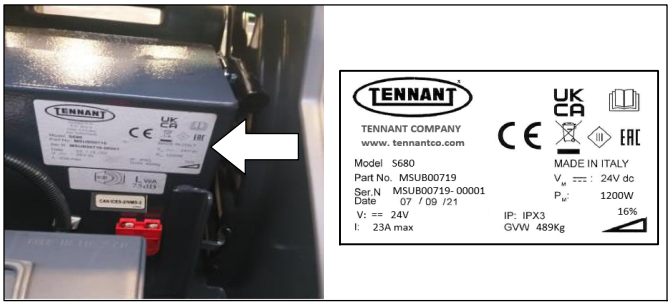

Tennant Company
10400 Clean Street
Eden Prairie, MN 55344-2650
USA
Phone: (800) 553-8033
www.tennantco.com

Tennant Company N.V.
Industrielaan 6 5405 AB
P.O. Box 6 5400 AA
Uden- The Netherlands
europe@tennantco.com
www.tennantco.com

Specifications and parts are subject to change without notice.

Copyright © 2026 TENNANT Company

RECOMMENDED SPARE PARTS LIST 4
REPLACEMENT BRUSHES 5
MAIN FRAME GROUP 6
DRIVE WHEEL AND REAR WHEEL GROUP 10
ELECTRICAL COMPONENTS GROUP (NAM/ANZ) 14
ELECTRICAL COMPONENTS GROUP (EMEA) 18
FILTER AND DUST FLAP GROUP 22
MAIN BRUSH GROUP 24
SIDE BRUSH GROUP 28
PROPEL MOTOR BREAKDOWN 30
MANUAL BATTERY WATERING KIT (OPTION) 31
ELECTRICAL DIAGRAM 32

RECOMMENDED SPARE PARTS LIST

Part No.	Description
KTRI06622	Assy, Main Brush, PPL (SPPV00056)
KTRI06623	Assy, Main Brush, PPL - Soft (Carpet) (SPPV01354)
KTRI06624	Assy, Main Brush, Mix PPL/Steel - Abrasive (SPPV00064)
PMVR00244	Side Brush, PPL (Standard)
PMVR00409	Side Brush, Mix PPL/Steel - Abrasive (Option)
CMCV00386	Cable, Side Brush Lift
MPVR04709	Side Flap, non- marking (Standard)
MPVR00760	Rear Flap, non- marking (Standard)
MPVR00847	Front Flap, non- marking (Standard)
MPVR04710	Side Flap, Outdoors (Option)
MPVR00761	Front Flap, Outdoors (Option)
MPVR00849	Rear Flap, Outdoors (Option)
FTDP00015	Filter Panel, Polyester (Standard)
FTDP00010	Filter Panel, Paper (Option)
FTDP00202	Pre- Filter (Option)
MTCG00018	Belt, Poly- V
CUVR46942	Main Brush Bearing
MOCC00008	Fan Motor
MOCC00297	Brush Motor
9017784	Brush Motor Carbons
MOCC00032	Side Brush Motor (right side)
MOCC00031	Side Brush Motor (left side)
MEVR31145	Side Brush Motor Carbons
MECB01227	Traction Potentiometer
KTRI05576	Speed Limit Potentiometer
MECB01228	Traction Microswitch
MECI00532	Front Main Contactor
PMQE00017	Brush Actuator Assembly
MOCC00461	Traction Motor
MEVR02378	Traction Motor Carbons
PMTR00084	Rear Wheel, non- marking (Standard)
RTRT00581	Front Wheel, non- marking (Standard)
PMTR00083	Rear Rubber Wheel (Option)
RTRT00036	Front Wheel (Option)
CUVR00005	Rear Wheel Bearing
MLML00034	Pedal Spring
MECE00910	Traction Board
MECE00860	Service Board
MECE00498	Display Board
MEVR00145	Fuse 100 Amp
METT00132	Resetable Fuse 30A
MEVR02806	Main Fuse 60A
METT00135	Resetable Fuse 2A
METT00141	Resetable Fuse 5A
METT00044	Resetable Fuse 10A
MELF33431	Beacon Lamp, 24V 21W
BACA00273	Charger, Battery, 24VDC, 25A [EUR]
MECB00922	Battery Charger Cord (EUR)
MECB02036	Battery Charger Cord (UK)
994203	Battery, 06Vdc 0180Ah, Gel [EUR]
9015391	Charger Kit, 24VDC, Off- Board [NA, ANZ] (Delta- Q)
1025642	Battery Charger Cord [NA]
1026325	Battery Charger Cord [ANZ] - (Delta- Q)
MECB02065	Battery Charger Cord [ANZ] - (SPE battery Charger)
1070591	Battery, 12Vdc, 225Ah, Wet [NA]
1260425	Battery, 12Vdc, 245Ah, AGM [NA]
L-390764	Battery, 6Vdc, 180Ah, Gel, Trojan (ANZ)
L-GF06180V	Battery, 6Vdc, 180Ah, Gel, Exide (ANZ)

REPLACEMENT BRUSHES

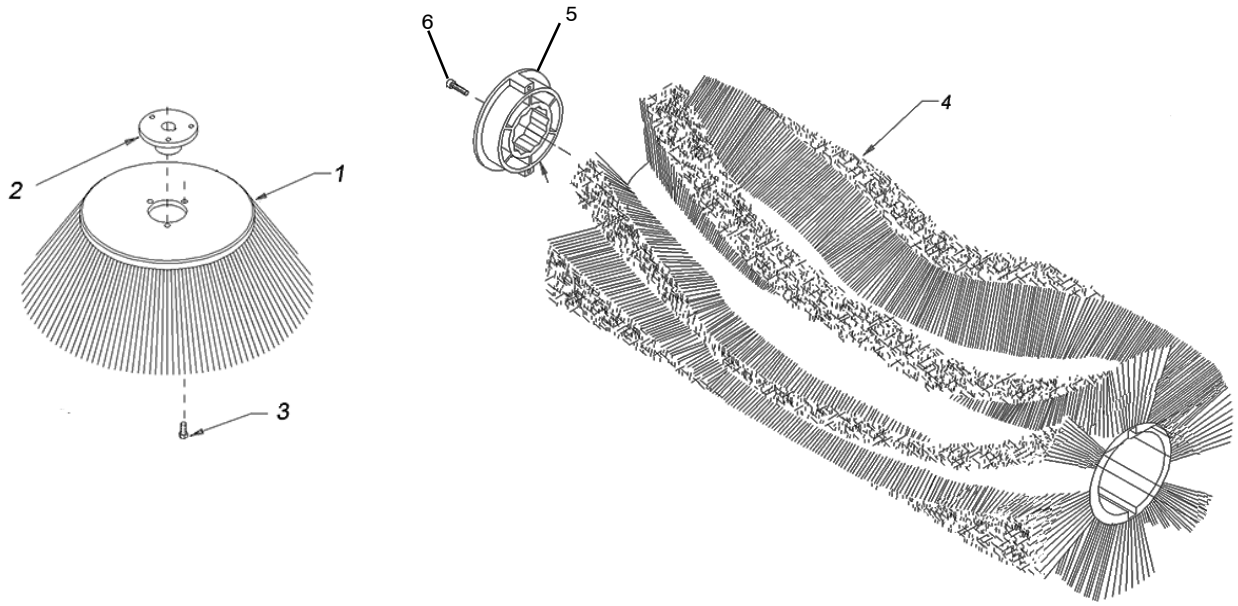

	Ref.	Part No.	Mfr. Date	Description	Qty.
∇	1	PMVR00244	( )	Brush, Side, Ppl	1
∇	1	PMVR00409	( )	Brush, Side, Mix Ppl/Steel, Abrasive	1
▲	2	LAFN45010	( )	Flange L.1400 Lt	1
▲	3	VTVT62920	( )	Screw Te F/Rond. M 6x 16 Zb	1
∇	4	KTRI06622	( )	Assy, Main Brush Ppl, Medium	1
	4	SPPV00056	( )	Main Brush Ppl, Medium	1
∇	4	KTRI06623	( )	Assy, Brush, Swp, Main, Pyp Soft	1
	4	SPPV01354	( )	Brush, Swp, Main, Pyp Soft	1
∇	4	KTRI06624	( )	Assy, Brush, Swp, Main, Pyp/Wir	1
	4	SPPV00064	( )	Brush, Swp, Main, Pyp/Wir	1
▲	5	LAFN45099	( )	Plug, Brush, Drive	1
▲	6	VTVT01705	( )	Screw, 4X45, UNI9709	2

∇ ASSEMBLY

▲ INCLUDED IN ASSEMBLY

MAIN FRAME GROUP

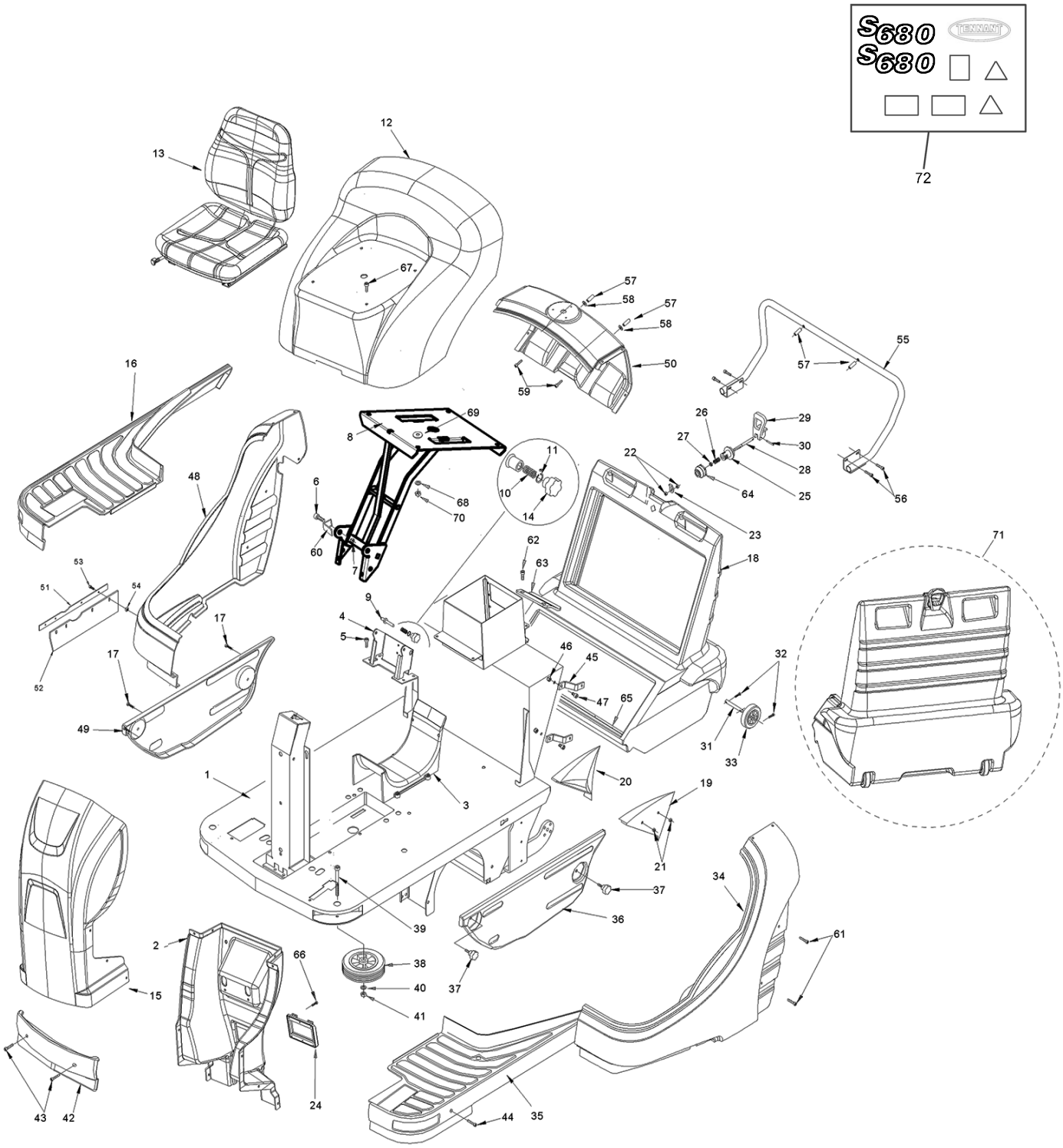

MAIN FRAME GROUP

Ref.	Part No.	Mfr. Date	Description	Qty.
1	LAFN11477	( )	Frame, Painted	1
2	MPVR12398	( )	Cover, Front, Internal, Grey	1
3	MPVR00330	( )	Cable, Holder	1
4	LAFN06731	( )	Colum, Sppt, Upper Seat, Complete	1
5	374174	( )	Screw, Soc, M8 X 1.25 X 20, 12.9	4
6	39283	( )	Screw, Hex, M10x1.50x25, 8.8	2
7	08714	( )	Nut, Hex, Lock, M10 X 1.5, Nl, Ss	2
8	LAFN11467	( )	Support	1
9	LAFN00526	( )	Pin, Block, Seat Door	1
10	MLML00028	( )	Spring Pin Block Seat Door	1
11	VTAE00016	( )	Seeger Internal Din 472 D.13	1
12	MPVR13416	( )	Cover	1
13	SESD45982	( )	Sensor, Seat	1
14	VTVT00127	( )	Handwheel D.30 M6	1
15	MPVR13415	( )	Crankcase, Front	1
16	MPVR00853	( )	Plane, Right	1
17	VTVT09916	( )	Screw Tbce Iso 7380 6x20 Zb	2
18	MPVR08008	( )	Cover, Waste	1
19	PMVR00501	( )	Conveyor Drawer Sx	1
20	PMVR00502	( )	Conveyor Drawer Dx	1
21	VTDD00491	( )	Nut, M6	4
22	VTDD13261	( )	Nut M 8x1 Uni 5589	2
23	LAFN01177	( )	Bracket Holder Drawer	1
24	MEVR00232	( )	Door, Fuse	1
25	LAFN00338	( )	Ring Nut, Drawer, Hook	1
26	MLML00036	( )	Spring Clip Drawer	1
27	LAFN75909	( )	Spacer D.12 H.3,5	1
28	LAFN00525	( )	Pin, Pull	1
29	MPVR00865	( )	Handle Trash Drawer	1
30	VTVR00055	( )	Plug D.4 H.32	1
31	LAFN00532	( )	Wheel Pin Drawer	2
32	09252	( )	Screw, Hex, M5 X 0.80 X 20, 8.8	4
33	RTRT00016	( )	Wheel Loose 80/30/G Nere	2
34	MPVR12400	( )	Cover, Body, Left Grey	1
35	MPVR00854	( )	Plane, Left	1
36	MPVR00856	( )	Plane, Left	1
37	VTVT00125	( )	Handwheel D.40 M6x15	2
38	RTRT00038	( )	Wheel D.150x32	2
39	VTVT01575	( )	Screw Tcce Uni 5931 10x60 Zb	2
40	VTRS00012	( )	Washer Uni 6592 10x21 Zb	2
41	VTDD00011	( )	Nut	2
42	MPVR00331	( )	Bumper, Front	1
43	VTVT00034	( )	Screw, TBCE ISO 7380 6X35 ZB	2
44	VTVT09916	( )	Screw Tbce Iso 7380 6x20 Zb	4
45	LAFN06271	( )	Bracket, Fixed, Crankcase	4
46	VTDD00491	( )	Nut, M6	4
47	VTVT75726	( )	Screw Tbei M 6x 16 Iso 7380 Zb	4
48	MPVR12401	( )	Cover, Body, Right, Grey	1
49	MPVR00855	( )	Plane, Right	1
50	MPVR12403	( )	Cover, Rear, Grey	1

MAIN FRAME GROUP - Contd

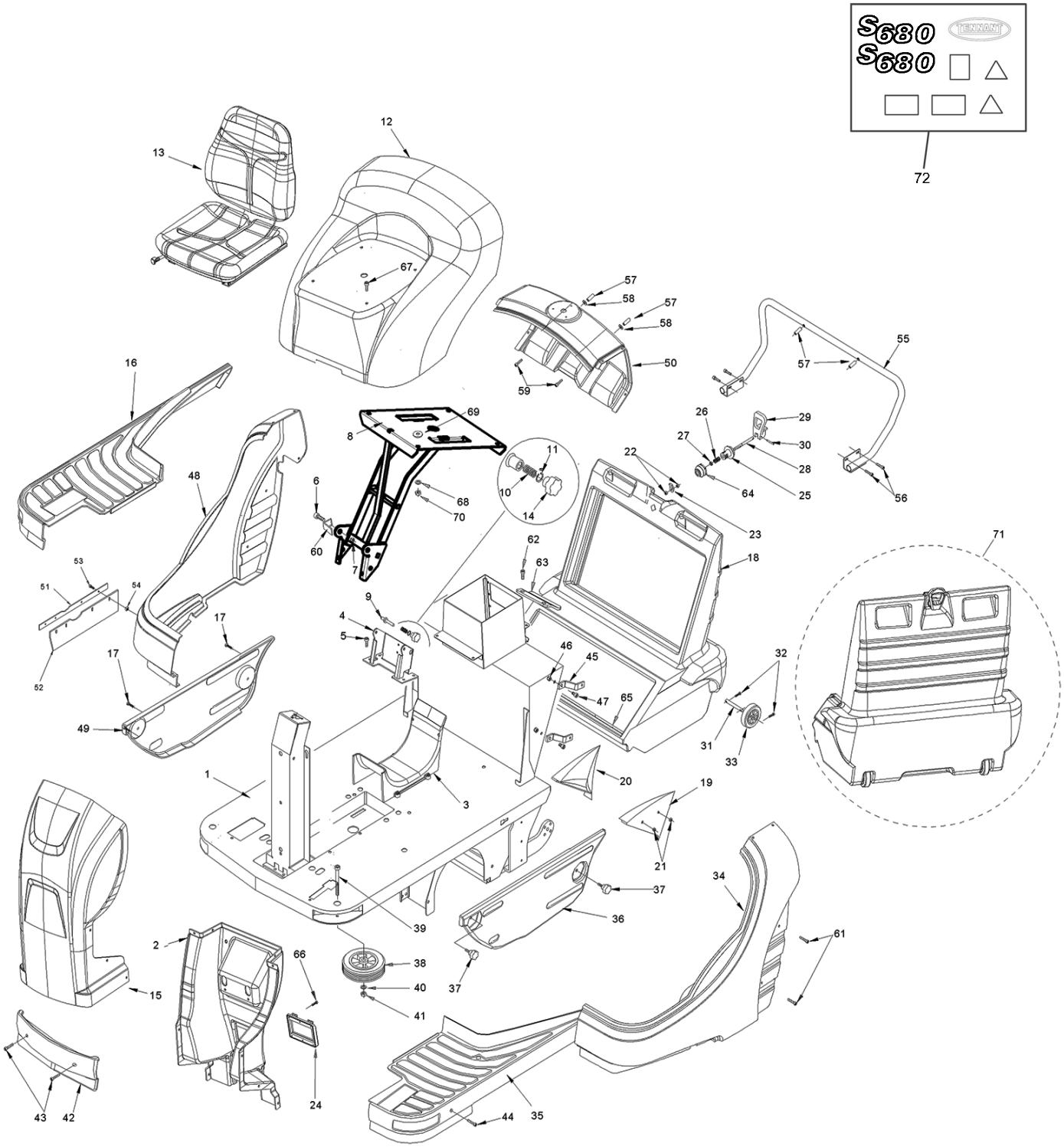

MAIN FRAME GROUP - Contd

Ref.	Part No.	Mfr. Date	Description	Qty.
51	LAFN10992	( )	Plate, Flap Fixed	1
52	MPVR04709	( )	Flap, Side	1
52	MPVR04710	( )	Flap, Sides	1
53	897476	( )	Screw, M5x16, Tbce, Iso7380, Zb	4
54	09739	( )	Nut, Hex, Lock, M5 X 0.80, Nl, Ss	4
55	LAFN10991	( )	Bumper, Rear	1
56	VTVT00527	( )	Screw Te Fr 6x10 Zb Zig.	4
57	LAFN10994	( )	Spacer, Fixed, Bumper	2
58	897619	( )	Washer, D.8x24, Zc	2
59	VTVT28567	( )	Screw, Tcei, 8x50mm, Uni5931	2
60	LAFN01188	( )	Bracket, Fixed, Fairing	2
61	VTVT75725	( )	Screw Tbei M 6x 10 Iso 7380 Zb	4
62	VTVT08937	( )	Screw Tcce Uni 5931 6x10 Zb	2
63	LAFN07037	( )	Bracket, Centering, Drawer	1
64	LAFN07036	( )	Drawer, Center Cone	1
65	LAFN06694	( )	Sheet Metal Pa. Drawer Reinforcement	1
66	VTVT48694	( )	Screw Tcb Tc 5 X12 Uni 9707 Tz	4
67	16931	( )	Screw, Hex, M8 X 1.25 X 20, 8.8	4
68	VTRS00504	( )	Washer D. 8 Zc. Uni 6592	4
69	897619	( )	Washer, D.8x24, Zc	4
70	897598	( )	Nut, M8, Flat	4
71	PMVR00430	( )	Cover, Rear, Complete	1
72	KTRI06563	( )	Kit, Label, Machine [NAM S680]	1
72	KTRI06560	( )	Kit, Label, Machine [EMEA S680]	1

DRIVE WHEEL AND REAR WHEEL GROUP

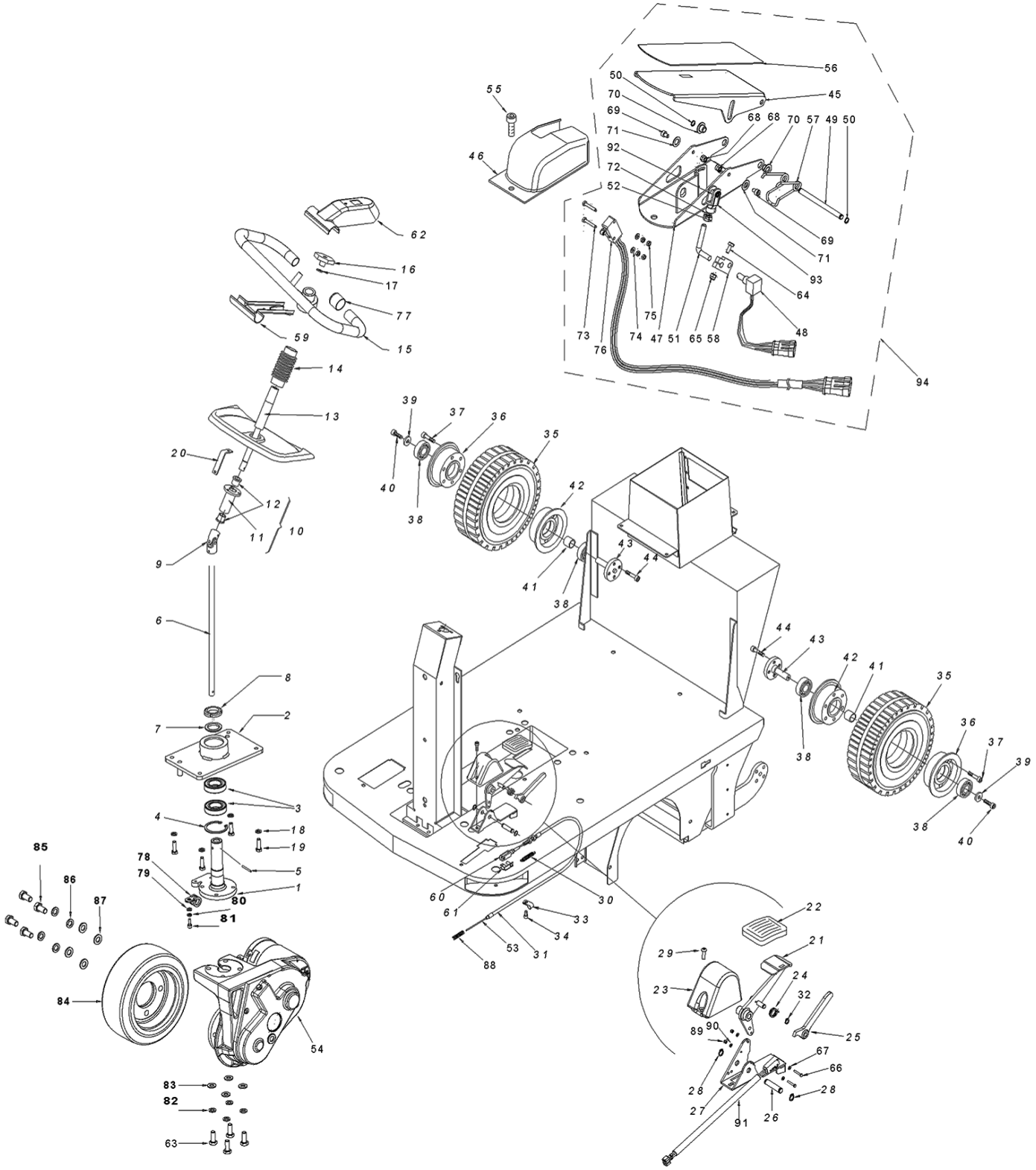

DRIVE WHEEL AND REAR WHEEL GROUP

	Ref.	Part No.	Mfr. Date	Description	Qty.
	1	LAFN09414	( )	Spacer	1
	2	LAFN09415	( )	Spacer	1
	3	CUVR00025	( )	Bearing 6006 2rs 30x55x13	2
	4	VTAE00015	( )	Screw, Seeger, Internal	1
	5	VTVR46987	( )	Elastic Plug 5x25	1
	6	ALTR00039	( )	Shaft Steering Wheel	1
	7	LAFN01173	( )	Spacer Steeringwheel	1
	8	VTVT00114	( )	Ring, Nut	1
	9	897397	( )	Joint, Steering	1
	10	PMTR00077	( )	Bushing	1
	11	LAFN00149	( )	Bushing	1
	12	897398	( )	Bushing, 15b 24d 17.5	2
	13	ALTR00031	( )	Steering Shaft	1
	14	MPVR47066	( )	Lifting Arm Protection	1
	15	SESD00022	( )	Steer Control, Wheel, Complete	1
	16	39283	( )	Screw, Hex, M10x1.50x25, 8.8	1
	17	VTRS00514	( )	Washer D.10x30x11.4	1
	18	VTRS01080	( )	Washer D. 8 Grw	4
	19	39277	( )	Screw, Hex, M8 X 1.25 X 25, 8.8	4
	20	LAFN01184	( )	Bracket, Fixed, Dashboard	1
	21	LAFN11138	( )	Pedal	1
	22	MPVR45096	( )	Pedal Cover Large V1021	1
	23	MPVR11518	( )	Covering	1
	24	MLML00035	( )	Spring, Pedal, Recall	1
	25	LAFN01147	( )	Pedal Block	1
	26	LAFN11140	( )	Pin	1
	27	LAFN11139	( )	Support	1
	28	VTAE87276	( )	Seeger Ext. D10 Din471	2
	29	VTVT09916	( )	Screw Tbce Iso 7380 6x20 Zb	1
	30	MLML45109	( )	Spring, Lift Flap	1
	31	CMCV00473	( )	Cable, Brake	1
	32	VTAE14096	( )	Clip, D.8, Din471	1
	33	FSVR00005	( )	Clamp, Ecohole, Mm8 D.1	1
	34	VTVT75719	( )	Screw Te Fr 6x10 Zb Knurled	1
∇		PMTR00084	( )	Wheel, Rear, Gray, Non- marking [Qty 1] (Standard)	2
∇		PMTR00083	( )	Wheel, Rear, Rubber [Qty 1] (Option)	2
▲	35	RTRT00035	( )	Ring, Gray Wheel, Rear, Non- Marking (Std)	2
▲	35	RTRT00034	( )	Ring, Rear Rubber Wheel [Option]	2
▲	36	LAFN85290	( )	Wheel Hub 124x57,5	2
▲	37	39308	( )	Screw, Soc, M8 X 1.25 X 25, 12.9	12
▲	38	CUVR00005	( )	Bearing 6202 2rs	4
	39	VTRS63242	( )	Washer D. 6 X24 Zc	2
	40	VTVT75726	( )	Screw Tbei M 6x 16 Iso 7380 Zb	2
▲	41	LAFN00275	( )	Spacer Internal Wheel Post.Tk1300	2
▲	42	LAFN85380	( )	Hub Sw 1000e/S 22501005	2
	43	LAFN00530	( )	Axel, Wide Rear Wheel	2
	44	360821	( )	Screw, Flt, Soc, M8 X 1.25 X 16, 10.9	8
	45	LAFN06474	( )	Plate, Pedal	1

∇ ASSEMBLY
▲ INCLUDED IN ASSEMBLY

DRIVE WHEEL AND REAR WHEEL GROUP - Contd

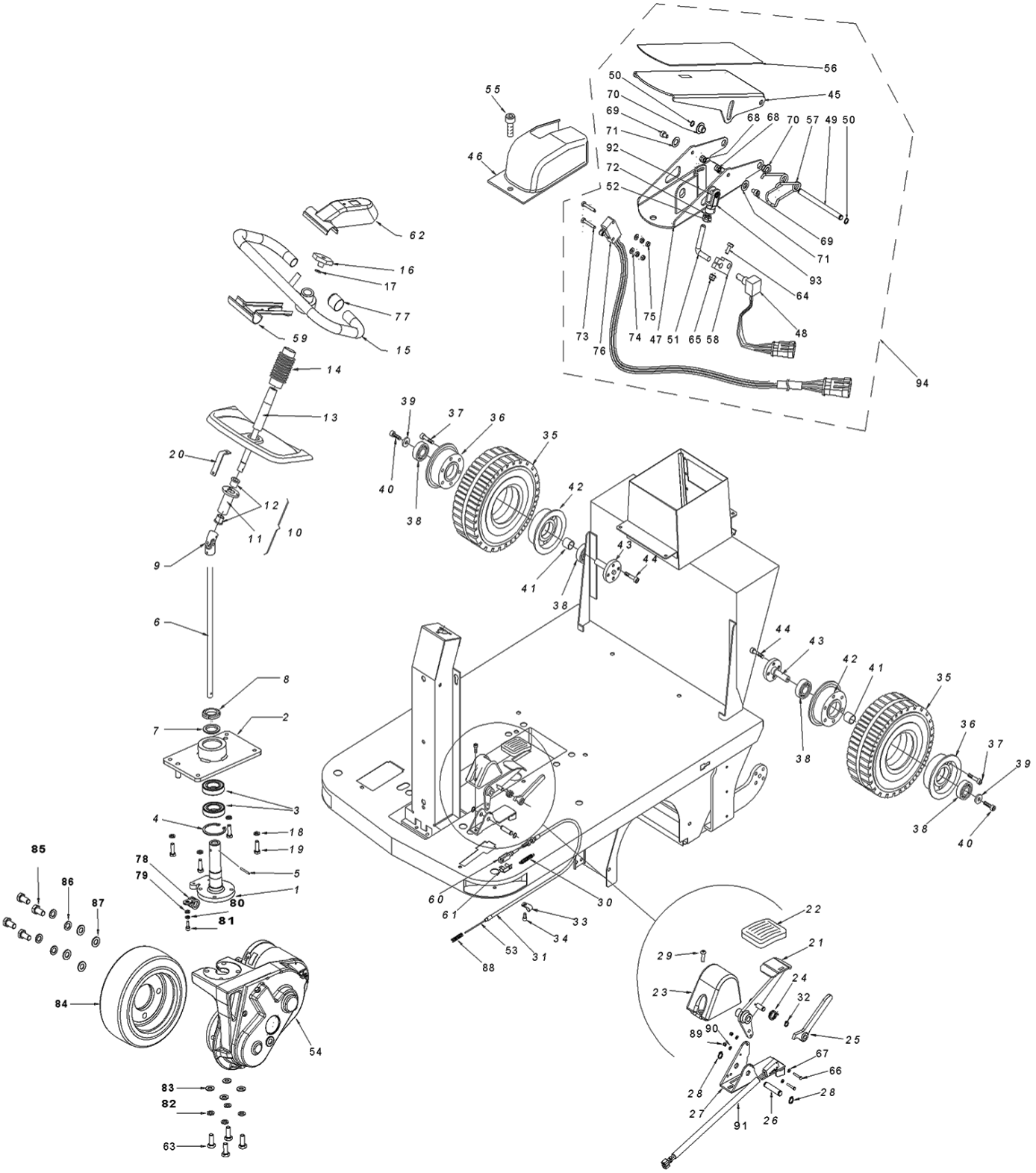

DRIVE WHEEL AND REAR WHEEL GROUP - Contd

Ref.	Part No.	Mfr. Date	Description	Qty.
46	MPVR00302	( )	Crankcase Feeder Pedal	1
47	LAFN07532	( )	Base	1
48	MECB01227	( )	Potentiometer, Traction	1
49	LAFN00524	( )	Pin, Pedal	1
50	VTAE48552	( )	Clip External Din 471 D.6	2
51	LAFN00909	( )	Bracket Pedal Wire	1
52	41359	( )	Nut, Hex, Std, M6 X 1.00, 8	1
53	CMCV00472	( )	Cable	1
54	MOCC00452	( )	Disk, Drive	1
55	VTVT62920	( )	Screw Te F/Rond. M 6x 16 Zb	1
56	MPVR00866	( )	Plate, Slip	1
57	MLML00034	( )	Pedal Spring	1
58	LAFN01149	( )	Rod, Connecting, Pedal Step	1
59	MPVR04653	( )	Cover, Upper Steering Wheel	1
60	CMCV00006	( )	Fork Uni 1676 M6x24	1
61	CMCV00009	( )	Clip Uni 1676	1
62	MPVR04652	( )	Cover, Lower Steering Wheel	1
63	39283	( )	Screw, Hex, M10x1.50x25, 8.8	4
64	VTVT00727	( )	Screw Te M 4,20	1
65	VTDD04369	( )	Nut M 4 Tef Uni 7473	1
66	VTVT01350	( )	Screw, M3x20	2
67	897193	( )	Washer, D. 3, Inox	1
68	VTDD04369	( )	Nut M 4 Tef Uni 7473	2
69	VTVT00089	( )	Screw Tcce Uni 5931 4x10 Zb	2
70	CUVR00183	( )	Bushing	2
71	MPVR05528	( )	Washer	2
72	VTRS01079	( )	Washer D.6 Elast.	1
73	VTVT01350	( )	Screw, M3x20	2
74	VTRS01579	( )	Washer D. 3 Uni 6592	2
75	897189	( )	Nut, M3, Inox	4
76	MECB01228	( )	Contact, Micro, Pedal	1
77	MPVR05256	( )	Cap Gpn- 280 Er32	2
78	897364	( )	Clamp, Stl, 16d, Insulated	1
79	VTRS00503	( )	Washer D. 6 Uni 6592	1
80	VTRS01079	( )	Washer D.6 Elast.	1
81	71388	( )	Screw, Soc, M6 X 1.00 X 16, 12.9	1
82	VTRS00107	( )	Washer M10 Grower	4
83	VTRS00505	( )	Washer D.10 Uni 6592	4
84	RTRT00581	( )	Wheel, Front, Non- Marking [Standard]	1
84	RTRT00036	( )	Wheel, Front, Black Rubber [Option]	1
85	41345	( )	Screw, Hex, M12 X 1.75 X 25, 8.8	4
86	897544	( )	Washer, D.12, Grover, Uni1751, Inox	4
87	897215	( )	Washer, D.12x24, Uni6592, Inox	4
88	MLML00033	( )	Spring Lift Flap Silver Zb	1
89	9018496	( )	Nut, Strap, Sqge	2
90	897193	( )	Washer, D. 3, Inox	2
91	MECI00637	( )	Switch, Micro	1
92	CMCV76639	( )	Fork M 6 Uni 1676	1
93	CMCV75717	( )	Clip Uni 1676 M6	1
94	PMVR02056	( )	Kit Throttle	1

ELECTRICAL COMPONENTS GROUP(NAM)

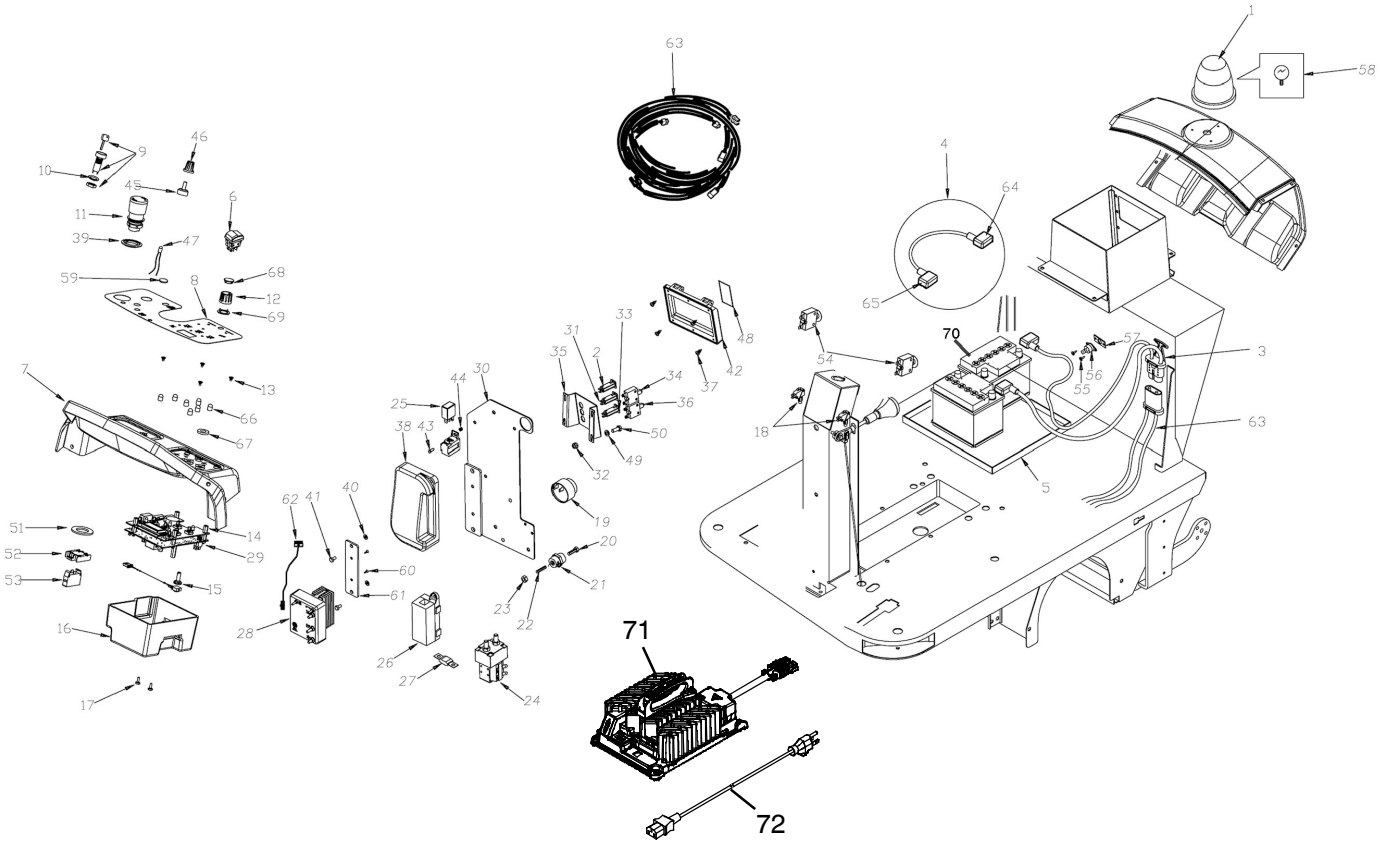

ELECTRICAL COMPONENTS GROUP (NAM)

Ref.	Part No.	Mfr. Date	Description	Qty.
1	MEVR00935	( )	Light, Flashing	1
2	METT00141	( )	Fuse, 5a	1
3	MECB02327	( )	Cable Assy, Battery [Emea]	1
4	897205	( )	Cable Assy, Battery, Bridge, W/ Terminal	3
5	LAFN46836	( )	Tray, Battery	1
6	MECI00038	( )	Switch, Rocker	1
7	MPVR12516	( )	Panel, Instmt	1
8	MEVR01984	( )	Panel, Cntrl	1
9	1017696	( )	Key Set, Replmt [F/ Keyswitch 1011402]	1
10	VTRS00023	( )	Washer, Lock, Ext, 18b, Uni6798	1
11	MECI00582	( )	Switch, Safety, Shutoff	1
12	MEVR01573	( )	Knob	1
13	VTVT01711	( )	Screw, Flat, Phl, M4x6, Uni7688	4
14	LAFN11146	( )	Stand- Off	4
15	MECB02402	( )	Assy, Pot- Meter, Display Board [S680]	1
16	MECB02402	( )	Assy, Pot- Meter, Display Board [S680]	1
17	VTVT00288	( )	Screw, 4x10	2
18	MECI75801	( )	Switch, Micro	2
19	MEVR01436	( )	Alarm, Buzzer	1
20	VTVT75719	( )	Screw, M6x 10	2
21	MEVR47082	( )	Isolator, M6	2
22	VTVT47088	( )	Screw, Set, Soc, M3x30, Uni5923	2
23	VTDD00004	( )	Nut, Hex, Std, M6, Uni5588	2
24	MECI00532	( )	Contactor, 24v, 100a	1
25	897297	( )	Relay, 24v, 10/20a	1
26	MEVR00146	( )	Housing, Fuse	1
27	MEVR00145	( )	Fuse, 100 A, 6.3 68.6l	1
28	MECE00969	( )	Controller, 24- 36v 80a [818r,S680]	1
29	MECE00969	( )	Controller, 24- 36v 80a [818r,S680]	1
30	LAFN11824	( )	Bracket, Ele	1
31	METT00135	( )	Circuitbreaker, 2a	1
32	VTDD00128	( )	Nut, Hex, Lock, M5	2
33	METT00141	( )	Fuse, 5a	1
34	METT00044	( )	Fuse, Breaker, 10a	1
35	LAFN11821	( )	Bracket, Fuse	1
36	METT00132	( )	Circuitbreaker, 30a	1
37	VTVT48694	( )	Screw, M5x12, Uni9707	4
38	MECE00910	( )	Controller, Drive [Italsea 7ch4q92f]	1
39	MPVR11692	( )	Washer, Switch	1
40	VTRS00365	( )	Washer, 25d 18b 1	2
41	VTVT01127	( )	Screw, M6x20	2
42	VTVT01127	( )	Screw, M6x20	1
43	VTVT00003	( )	Screw, Hex, M4 X 0.70 X 12, Uni5739	1
44	VTDD04369	( )	Nut, Hex, M4, Uni7473	1
45	KTRI05576	( )	Potentiometer, 100k	1
46	KTRI01935	( )	Knob, Spd, Cntrl	1
47	KTRI02054	( )	Light Kit, Diagnostic	1
48	ETET17760	( )	Label	1
49	VTRS00503	( )	Washer, 6d, Uni6592	4
50	VTVT01531	( )	Screw, Hex, M6x16, Uni5739	4

ELECTRICAL COMPONENTS GROUP (NAM) - Cont'd

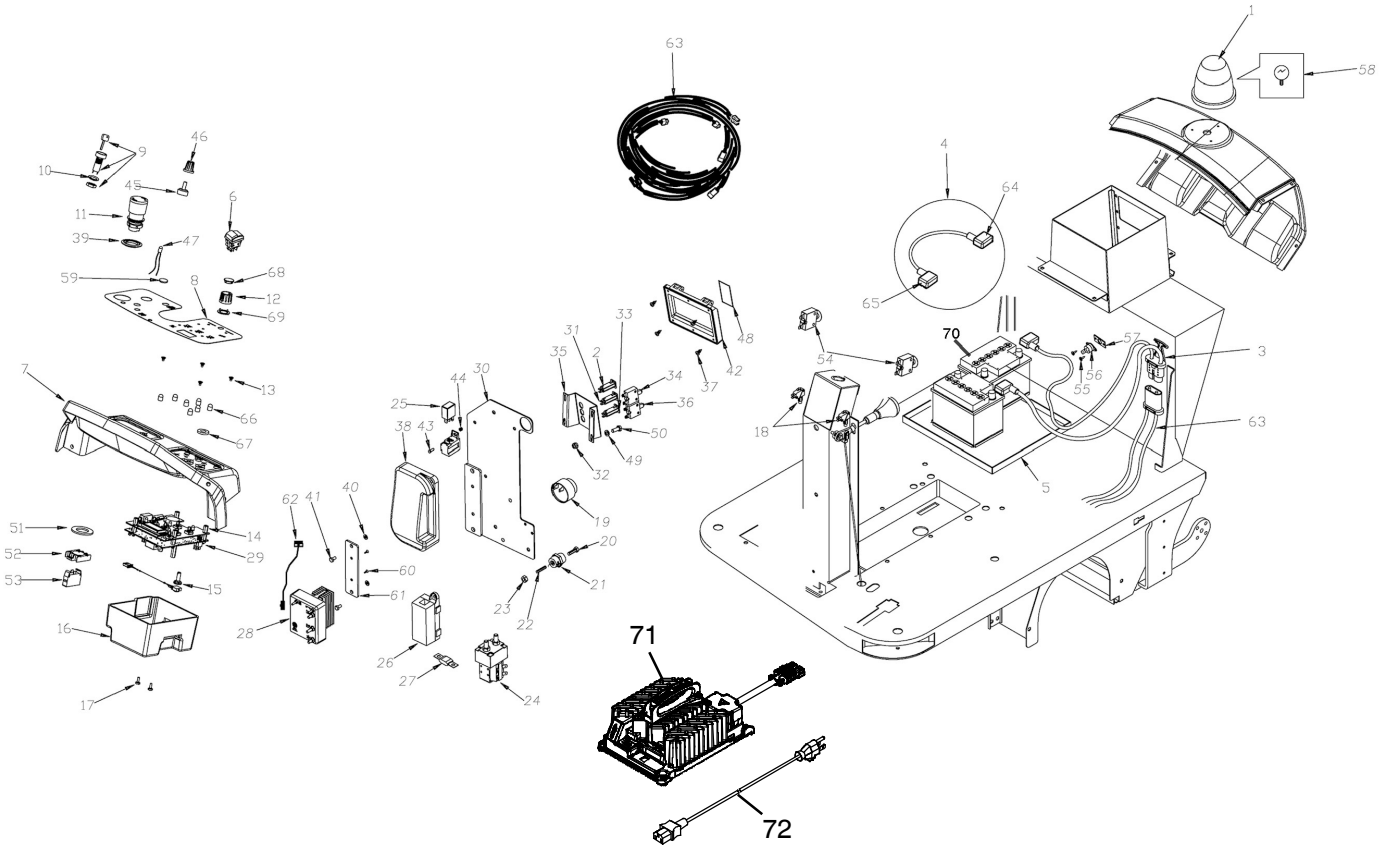

ELECTRICAL COMPONENTS GROUP (NAM) - Cont'd

	Ref.	Part No.	Mfr. Date	Description	Qty.
	51	MPVR11693	( )	Washer, 39.6d 22.5b 2.4	1
	52	MECI00583	( )	Mount, Switch	1
	53	MECI00584	( )	Connector	1
	54	METT00044	( )	Fuse, Breaker, 10a	2
	55	VTVT00039	( )	Screw, Pan, Phl, 3.5x10, Fmg, Uni6954	2
	56	METK00017	( )	Sensor, Thermal	1
	57	GUGO00675	( )	Gasket, Sensor	1
	58	MELF33431	( )	Lamp, 24v, 21w	1
	59	MPVR00045	( )	CAP IN PLAST	1
	60	VTVT01637	( )	Screw, Flat, Head, Phl 3,9x9,5mm	2
	61	LAFN07203	( )	Plate, Mounting, Controller [S680,818r]	1
	62	MECB02400	( )	Harness, Controller [S680,818r]	1
	63	MECB02326	( )	Harness, Main	1
	64	MEVR01424	( )	Boot,Terminal,Batt [Red,Emea]	1
	65	MEVR01425	( )	Boot,Terminal,Batt [Black,Emea]	1
	66	MEVR02935	( )	Cap	7
	67	VTRS00382	( )	Washer	1
	68	MEVR01575	( )	Cap, Knob	1
	69	MEVR01574	( )	Nut, Ring	1
▽	70	1070591	( )	Battery, Wet, 12vdc 0225ah, W/ Cart [Tr]	2
▲		1272714	( )	Vent, Master, Trojan	2
	70	1260425	( )	Battery, Agm, 12vdc 245ah	2
	70	L-390764	( )	Local Battery 6v 180ah [Coles Only]	4
	70	L-GF06180V	( )	6v 180ah Exide Gel Battery [Tps]	4
	71	9015391	( )	Charger, Battery	2
	72	1025642	( )	Cord, Power, 16/3, 15ft Blk [Us]	2
	72	1026325	( )	Cord, Power, 1.0mm2/3 Blk[2.5meter, Aus]	2
	72	MECB02065	( )	Cord, Power Chrgr Anz	2

ELECTRICAL COMPONENTS GROUP(EMEA)

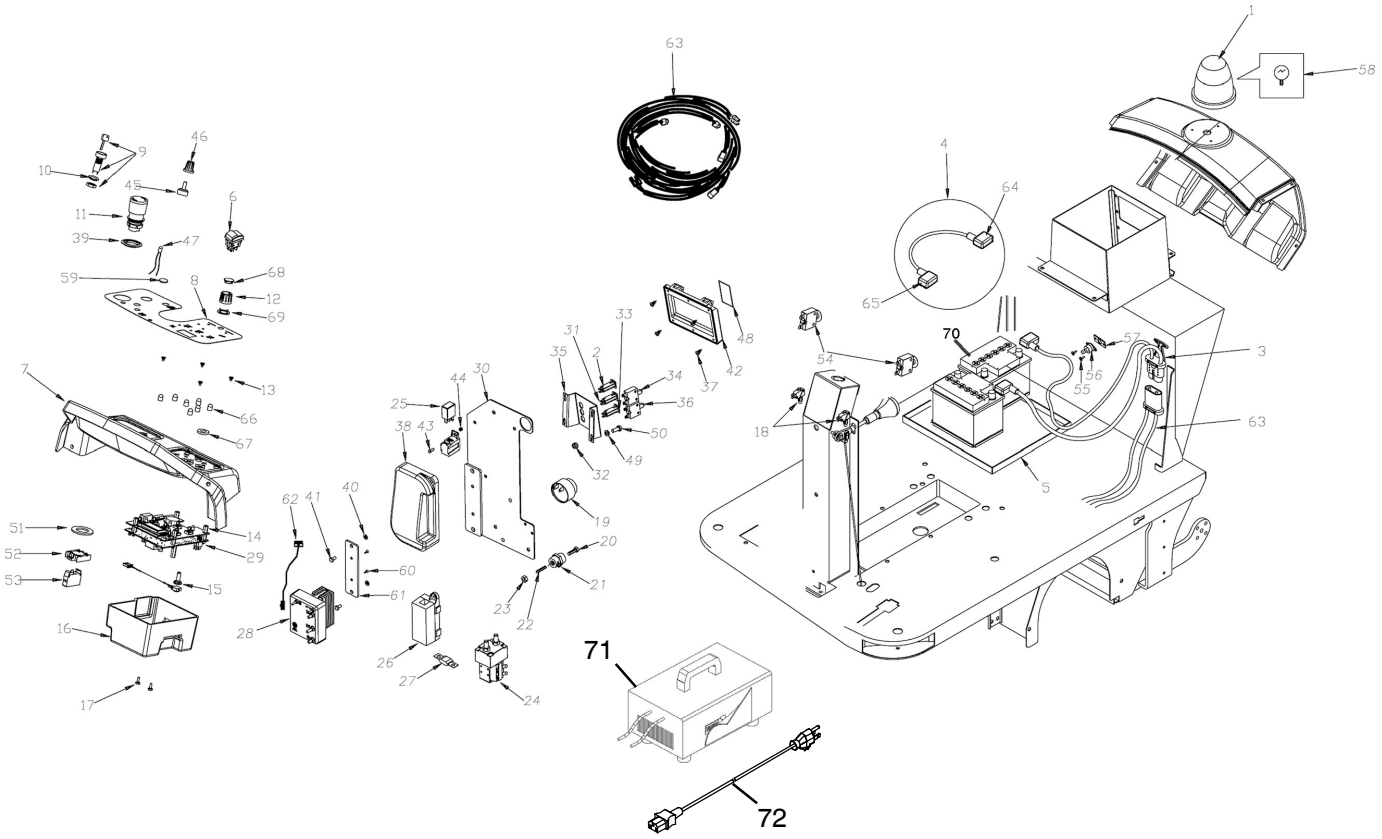

ELECTRICAL COMPONENTS GROUP (EMEA)

Ref.	Part No.	Mfr. Date	Description	Qty.
1	MEVR00935	( )	Light, Flashing	1
2	METT00141	( )	Fuse, 5a	1
3	MECB02355	( )	Cable Assy, Battery	1
4	897357	( )	Cable, 390l, M8ring/M8ring	1
5	LAFN46836	( )	Tray, Battery	1
6	MECI00038	( )	Switch, Rocker	1
7	MPVR12516	( )	Panel, Instmt	1
8	MEVR01984	( )	Panel, Cntrl	1
9	1017696	( )	Key Set, Replmt [F/ Keyswitch 1011402]	1
10	VTRS00023	( )	Washer, Lock, Ext, 18b, Uni6798	1
11	MECI00582	( )	Switch, Safety, Shutoff	1
12	MEVR01573	( )	Knob	1
13	VTVT01711	( )	Screw, Flat, Phl, M4x6, Uni7688	4
14	LAFN11146	( )	Stand- Off	4
15	MECB02402	( )	Assy, Pot- Meter, Display Board [S680]	1
16	MPVR04902	( )	Cover, Controller	1
17	VTVT00288	( )	Screw, 4x10	2
18	MECI75801	( )	Switch, Micro	2
19	MEVR01436	( )	Alarm, Buzzer	1
20	VTVT75719	( )	Screw, M6x 10	2
21	MEVR47082	( )	Isolator, M6	2
22	VTVT47088	( )	Screw, Set, Soc, M3x30, Uni5923	2
23	VTDD00004	( )	Nut, Hex, Std, M6, Uni5588	2
24	MECI00532	( )	Contactor, 24v, 100a	1
25	897297	( )	Relay, 24v, 10/20a	1
26	MEVR00146	( )	Housing, Fuse	1
27	MEVR00145	( )	Fuse, 100 A, 6.3 68.6l	1
28	MECE00969	( )	Controller, 24- 36v 80a [818r,S680]	1
29	MECE00973	( )	Board G1050 MY2023	1
30	LAFN11824	( )	Bracket, Ele	1
31	METT00135	( )	Circuitbreaker, 2a	1
32	VTDD00128	( )	Nut, Hex, Lock, M5	2
33	METT00141	( )	Fuse, 5a	1
34	METT00044	( )	Fuse, Breaker, 10a	1
35	LAFN11821	( )	Bracket, Fuse	1
36	METT00132	( )	Circuitbreaker, 30a	1
37	VTVT48694	( )	Screw, M5x12, Uni9707	4
38	MECE00910	( )	Controller, Drive [Italsea 7ch4q92f]	1
39	MPVR11692	( )	Washer, Switch	1
40	VTRS00365	( )	Washer, 25d 18b 1	2
41	VTVT01127	( )	Screw, M6x20	2
42	MEVR00232	( )	Cover, Fuse	1
43	VTVT00003	( )	Screw, Hex, M4 X 0.70 X 12, Uni5739	1
44	VTDD04369	( )	Nut, Hex, M4, Uni7473	1
45	KTRI05576	( )	Potentiometer, 100k	1
46	KTRI01935	( )	Knob, Spd, Cntrl	1
47	KTRI02054	( )	Light Kit, Diagnostic	1
48	ETET17760	( )	Label	1
49	VTRS00503	( )	Washer, 6d, Uni6592	4
50	VTVT01531	( )	Screw, Hex, M6x16, Uni5739	4

ELECTRICAL COMPONENTS GROUP (EMEA) - Cont'd

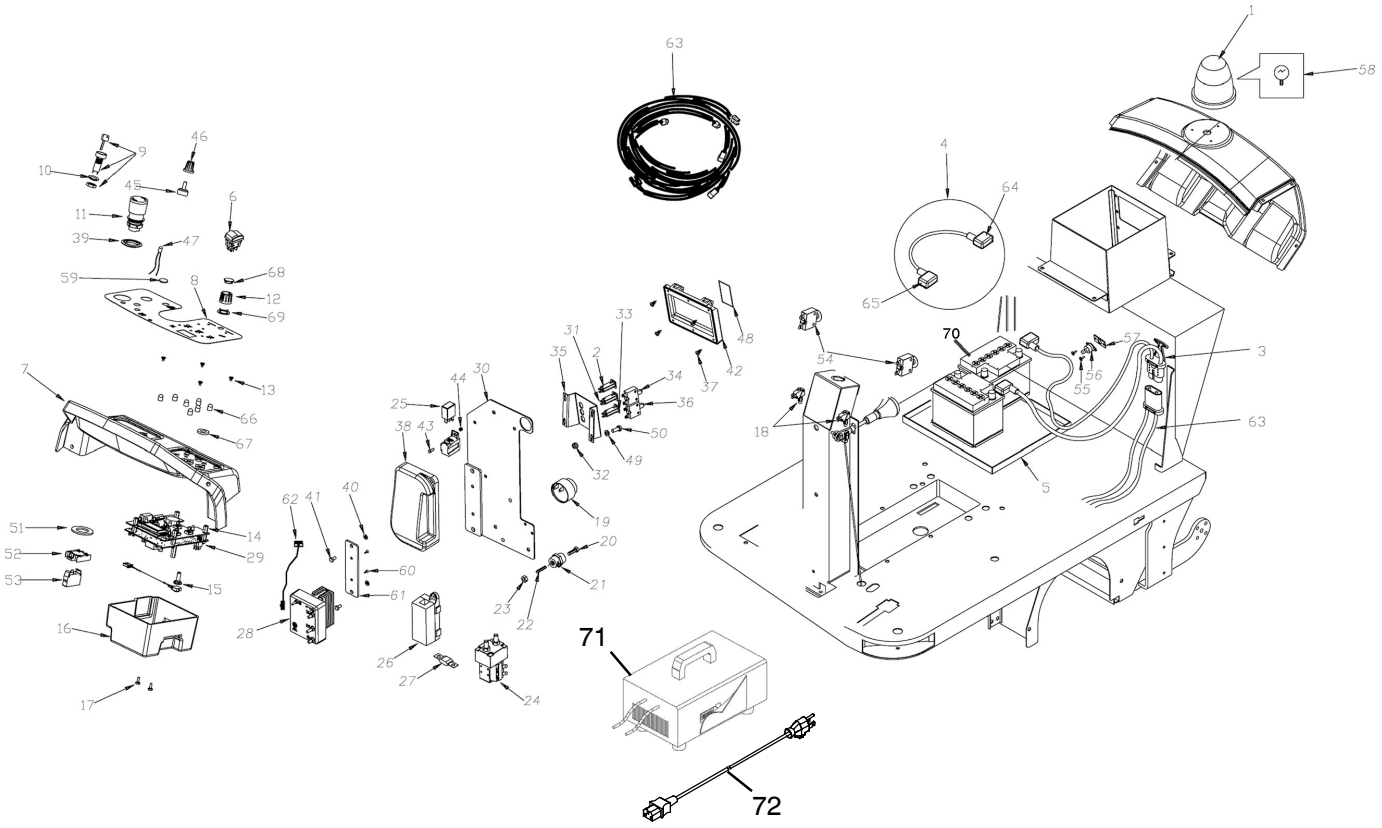

ELECTRICAL COMPONENTS GROUP (EMEA) - Cont'd

Ref.	Part No.	Mfr. Date	Description	Qty.
51	MPVR11693	( )	Washer, 39.6d 22.5b 2.4	1
52	MECI00583	( )	Mount, Switch	1
53	MECI00584	( )	Connector	1
54	METT00044	( )	Fuse, Breaker, 10a	2
55	VTVT00039	( )	Screw, Pan, Phl, 3.5x10, Fmg, Uni6954	2
56	METK00017	( )	Sensor, Thermal	1
57	GUGO00675	( )	Gasket, Sensor	1
58	MELF33431	( )	Lamp, 24v, 21w	1
59	MPVR00045	( )	CAP IN PLAST	1
60	VTVT01637	( )	Screw, Flat, Head, Phl 3,9x9,5mm	2
61	LAFN07203	( )	Plate, Mounting, Controller [S680,818r]	1
62	MECB02400	( )	Harness, Controller [S680,818r]	1
63	MECB02326	( )	Harness, Main	1
64	MEVR02916	( )	Boot,Terminal,Battery [Red,Na]	1
65	MEVR00889	( )	Boot,Terminal,Battery [Black,Na]	1
66	MEVR02935	( )	Cap	7
67	VTRS00382	( )	Washer	1
68	MEVR01575	( )	Cap, Knob	1
69	MEVR01574	( )	Nut, Ring	1
70	994203	( )	Battery, 06vdc 0180ah [5h,Gf06180]	4
71	BACA00273	( )	Charger, Battery, 24vdc, 25a	1
72	MECB00922	( )	Cord, Power, Chrgr, 230v	1
72	MECB02036	( )	Cord, Power, Chrgr	1

FILTER AND DUST FLAP GROUP

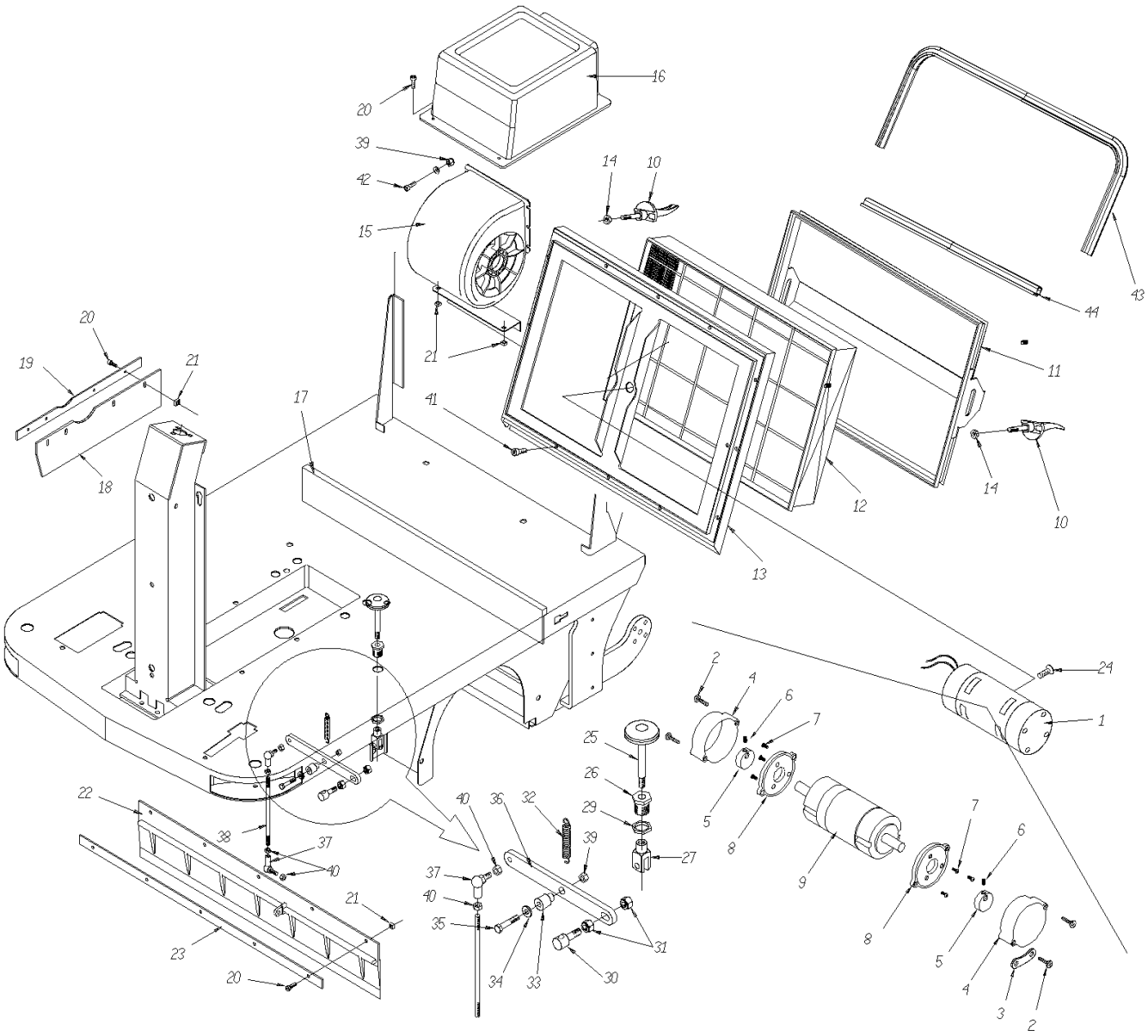

FILTER AND DUST FLAP GROUP

Ref.	Part No.	Mfr. Date	Description	Qty.
1	MOCC45112	( )	Motor Filter Shaker 24v	1
2	VTVT47138	( )	Screw Autof.Tsp Uni 6955 3,9x32	4
3	MPVR00765	( )	Rubber Shackle Wire Fixing	2
4	LAFN47139	( )	Cover, Filter	2
5	LAFN47140	( )	Bushing Counterweight For Shake Filter	2
6	VTVT75731	( )	Screw Uni 5923 6 X5	2
7	VTVT76616	( )	Screw, Flt, M4 X 0.7 X 16, Soc	6
8	MFVR47141	( )	Flange, Filter, Shaker Motor	2
9	MOCC00004	( )	Motor D.63 24v G3800 W35	1
10	PMVR00383	( )	Handle, Filter Lock, Silver	2
11	LAFN11511	( )	Frame, Filter	1
12	FTDP00015	( )	Filter, Panel, Pyes [Standard]	1
12	FTDP00010	( )	Filter, Panel, Paper [Option]	1
12	FTDP00202	( )	Pre- Filter [Option]	1
13	LAFN01030	( )	Frame Filter Support Complete	1
14	VTDD13261	( )	Nut M 8x1 Uni 5589	2
15	MOCC00008	( )	Fan Motor	1
16	MPVR00864	( )	Cover, Suction Fan	1
17	MPVR00760	( )	Flap, Rear, Non- Marking [Standard]	1
17	MPVR00849	( )	Flap, Rear, Outdoors [Option]	1
18	MPVR04709	( )	Flap, Side, Non- Marking [Standard]	1
18	MPVR04710	( )	Flap, Side, Outdoors [Option]	1
19	LAFN00325	( )	Clamp, Flap, Side Zinc.	1
20	VTVT00044	( )	Screw Tc Af.X Plas Uni9707 4x16	13
21	VTVR47015	( )	Insert, Plastic	13
22	MPVR00847	( )	Flap, Front, Non- Marking [Standard]	1
22	MPVR00761	( )	Flap, Front, Outdoors [Option]	1
23	LAFN00326	( )	Clamp, Flap, Front, Zinc	1
24	VTVT47143	( )	Screw Tsce Uni 5933 10x16 Zb	1
25	LAFN01150	( )	Pedal Lift Flap	1
26	LAFN01159	( )	Pin Thread Lift Flap	1
27	CMCV00001	( )	Fork Uni 1676 M8x16	1
29	VTDD00022	( )	Nut Uni 5589 M18x1,5 Zb	1
30	41342	( )	Screw, Hex, M8 X 1.25 X 40, 8.8	1
31	897598	( )	Nut, M8, Flat	1
32	MLML00037	( )	Spring Pedal Lift Flap	1
33	LAFN01160	( )	Pin Pivot Lift Flap	1
34	VTRS04026	( )	Washer D. 6x18x2.38	1
35	30556	( )	Screw, Soc, M6 X 1.00 X 35, 12.9	1
36	LAFN01163	( )	Rod Lift Flap	1
37	VTVR45280	( )	Toggle- Joint M 6	2
38	LAFN06357	( )	Pin Lift Flap	1
39	VTDD00491	( )	Nut M 6 Tef	5
40	41359	( )	Nut, Hex, Std, M6 X 1.00, 8	4
41	71388	( )	Screw, Soc, M6 X 1.00 X 16, 12.9	12
42	VTVT24209	( )	Screw Tcce Uni 5931 6x12 Zb	6
43	GUGO00285	( )	Gasket, Rear Container	1,5
44	GUGO00285	( )	Gasket, Rear Container	0,8

MAIN BRUSH GROUP

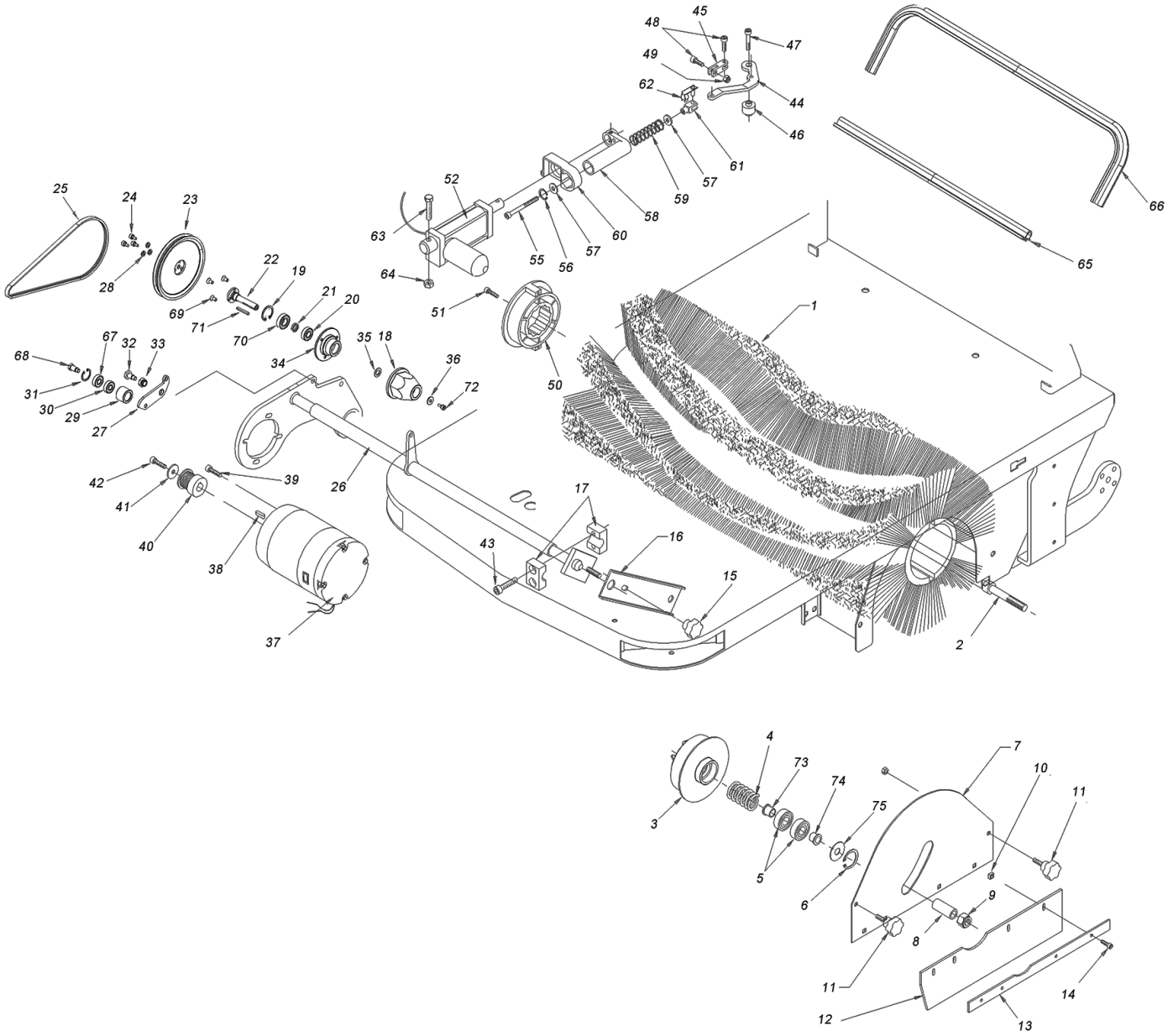

MAIN BRUSH GROUP

Ref.	Part No.	Mfr. Date	Description	Qty.
1	KTRI06622	( )	Main Brush Ppl, Medium	1
2	381900	( )	Screw, Soc, M12 X 1.75 X 80, 12.9	1
3	MPVR04923	( )	Support, Brush Central	1
4	MLML00295	( )	Spring, Brush, Central	1
5	CUVR17004	( )	Ball Bearing 6202 - 2rs1	2
6	VTAE17002	( )	Circlip D. 35 Uni 7437	1
7	LAFN06356	( )	Plate Central Brush	1
8	LAFN01169	( )	Spacer S.C.	1
9	VTDD00012	( )	Nut Autoblock Din 985 M12 Zb	1
10	VTVR47015	( )	Insert, Plastic	4
11	RTRT00022	( )	Handwheel D.30 M6x15	2
12	MPVR04709	( )	Flap, Side	1
12	MPVR04710	( )	Flap, Side, Outdoors [Option]	1
13	LAFN00325	( )	Clamp, Flap, Side Zinc.	1
14	VTVT00044	( )	Screw Tc Af.X Plas Uni9707 4x16	4
15	VTVT00124	( )	Handwheel D.40 M8	1
16	LAFN00816	( )	Central Removable Arm Brush,Zinc	1
17	LAFN47055	( )	Hose Collar C3 D.18 Solo Pvc	4
18	LAFN44774	( )	Hub	1
19	VTAE00020	( )	Seeger, I32 Din472	1
20	CUVR46942	( )	Bearing, Main Brush, Pulley	1
21	LAFN11240	( )	Spacer 12x18x4	1
22	LAFN11239	( )	Pin	1
23	MTPL00023	( )	Pulley, Central Brush	1
24	VTVT08937	( )	Screw Tcce Uni 5931 6x10 Zb	3
25	MTCG00018	( )	Belt Poly Pj724/285j	1
26	LAFN11238	( )	Arm Central Brush	1
27	LAFN11113	( )	Arm	1
28	VTRS01079	( )	Washer D.6 Elast.	3
29	LAFN11115	( )	Roller	1
30	CUVR86373	( )	Bearing 6000 2rs	1
31	VTAE13513	( )	Circlip D. 26 Uni 7437	1
32	LAFN47051	( )	Pin Fixing Tendicing	1
33	LAFN47033	( )	Bushing Pedal Pin Fixing	1
34	LAFN11241	( )	Ring	1
35	LAFN11242	( )	Washer	1
36	VTRS04026	( )	Washer D. 6x18x2.38	1
37	MOCC00297	( )	Motor 300w	1
37	9017784	( )	Carbon Brush, Brush Motor [Qty 1] (requires 4)	1
38	VTVR13165	( )	Key Uni 6604 5x5x20	1
39	33951	( )	Screw, Soc, M6 X 1.00 X 20, 12.9	4
40	MTPL00022	( )	Pulley Motor Central Brush	1
41	VTRS63242	( )	Washer D. 6 X24 Zc	1
42	VTVT75725	( )	Screw Tbei M 6x 10 Iso 7380 Zb	1
43	VTVT06236	( )	Screw Tcce Uni 5931 6x40 Zb	4
44	LAFN00358	( )	Pulley, Central Brush Return	1
45	LAFN00359	( )	Rod, Link	1
46	LAFN00533	( )	Pin Return Central Lever Brush	1
47	30556	( )	Screw, Soc, M6 X 1.00 X 35, 12.9	1
48	VTVT00104	( )	Screw Te Uni 5739 6x18 Zb	2

MAIN BRUSH GROUP - Contd

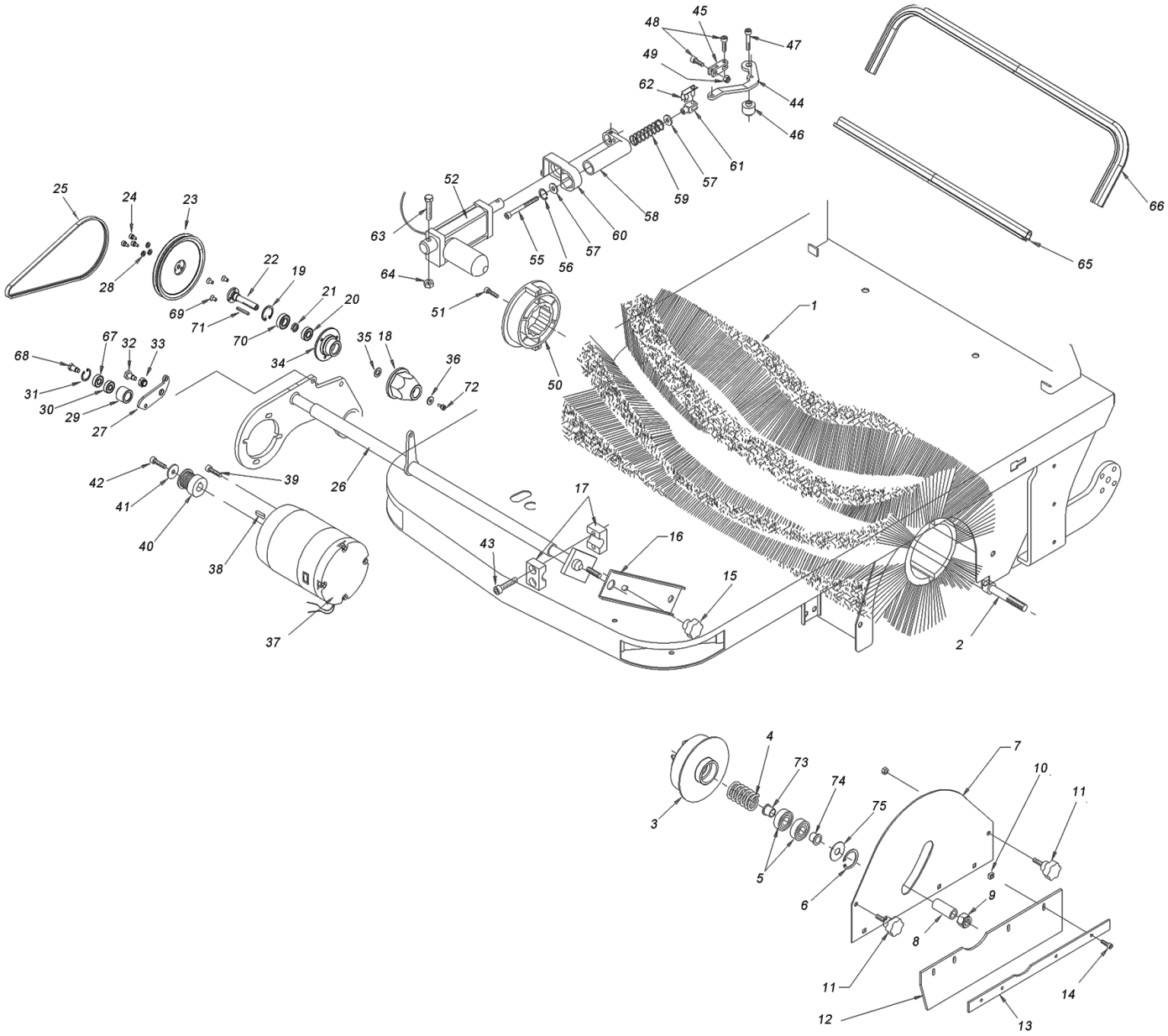

MAIN BRUSH GROUP - Contd

Ref.	Part No.	Mfr. Date	Description	Qty.
49	VTDD00491	( )	Nut M 6 Tef	2
50	LAFN45099	( )	Drive Disk Central Brush	1
51	VTVT01705	( )	Screw 4x45 Uni 9709	2
52	PMQE00017	( )	Acutator, Central Brush	1
55	VTVT37013	( )	Screw Te M 6x100 Uni 5737	1
56	VTAE00009	( )	Washer 472 D.20	1
57	LAFN00124	( )	Cylinder Bar, Bushing	2
58	MPVR45279	( )	Holder, Central Brush Spring	1
59	MLML45281	( )	Spring, Brush, Central	1
60	LAFN00756	( )	Guide, Central Spring Box	1
61	CMCV00006	( )	Fork Uni 1676 M6x24	1
62	CMCV00009	( )	Clip Uni 1676	1
63	06955	( )	Screw, Hex, M8 X 1.25 X 35, 8.8	1
64	897598	( )	Nut, M8, Flat	1
65	GUVR00622	( )	Gasket 0.7m	1
66	GUVR00623	( )	Gasket 1.1m	1
67	CUVR86373	( )	Bearing 6000 2rs	1
68	LAFN11114	( )	Pin	1
69	VTVT00678	( )	Screw	3
70	CUVR00164	( )	Bearing, Main Brush	1
71	VTVR00006	( )	Key Uni 6604 4x4x35	1
72	VTVT24209	( )	Screw Tcce Uni 5931 6x12 Zb	1
73	LAFN06782	( )	Bushing, Bearing	1
74	LAFN06783	( )	Bushing, Bearing	1
75	VTRS00553	( )	Washer, Dust	1

SIDE BRUSH GROUP

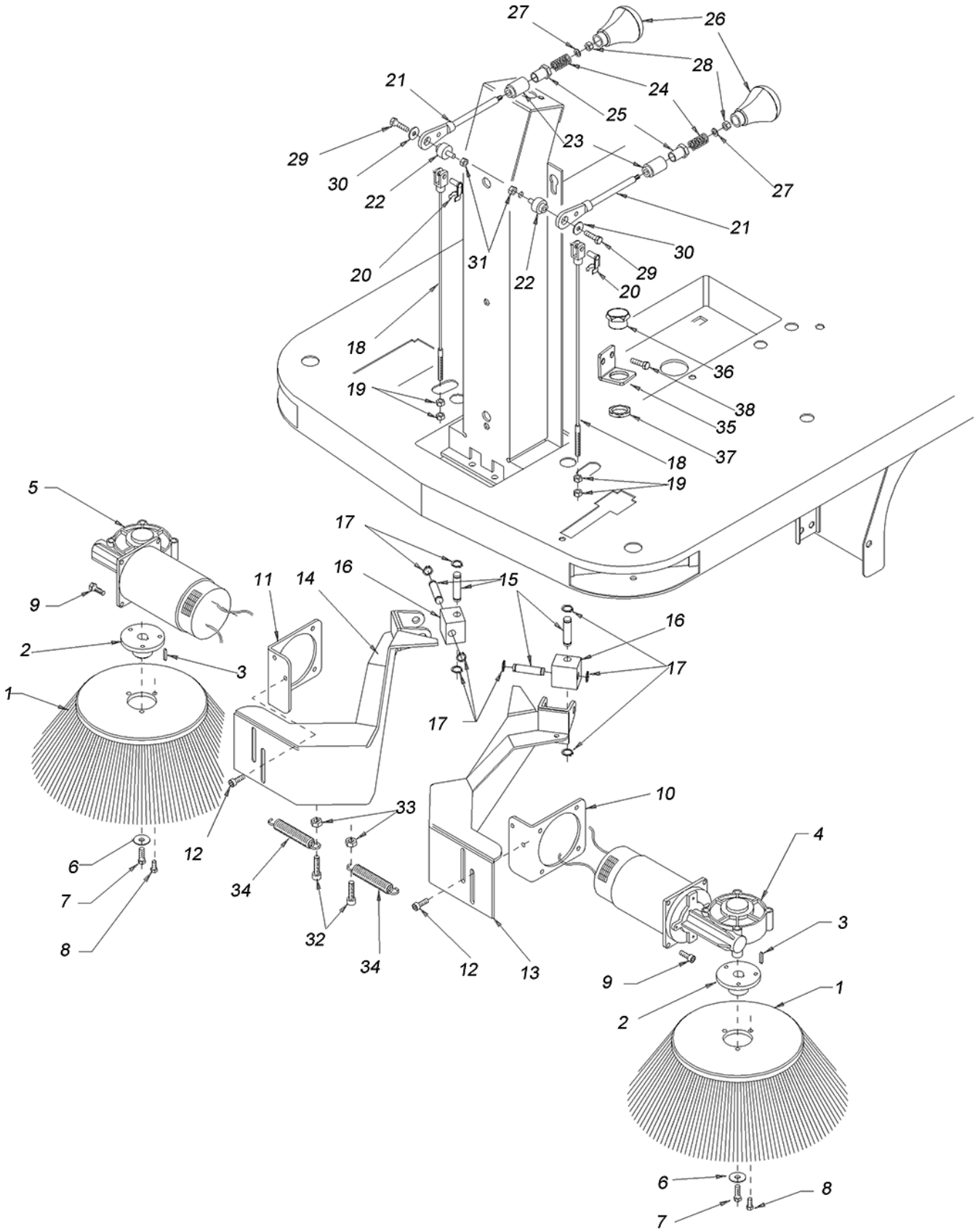

SIDE BRUSH GROUP

Ref.	Part No.	Mfr. Date	Description	Qty.
1	PMVR00244	( )	Brush, Side, Ppl	2
2	LAFN45010	( )	Flange L.1400 Lt	2
3	VTVR13165	( )	Key Uni 6604 5x5x20	2
4	MOCC00031	( )	Motor, Brush, Side Right	1
	MEVR31145	( )	Side Brush Motor Carbons	2
5	MOCC00032	( )	Motor, Brush, Side Left	1
	MEVR31145	( )	Side Brush Motor Carbons	2
6	VTRS63242	( )	Washer D. 6 X24 Zc	2
7	VTVT75719	( )	Screw Te Fr 6x10 Zb Knurled	2
8	VTVT62920	( )	Screw Te F/Rond. M 6x 16 Zb	6
9	71388	( )	Screw, Soc, M6 X 1.00 X 16, 12.9	8
10	LAFN00809	( )	Plate, Side Brush	1
11	LAFN00808	( )	Plate, Side Brush	1
12	VTVT75719	( )	Screw Te Fr 6x10 Zb Knurled	4
13	LAFN09470	( )	Support, Side Brush, Left	1
14	LAFN00798	( )	Side Support Dx 1050 Galvanized	1
15	LAFN01148	( )	Pin, Brush, Side	4
16	LAFN00154	( )	Arm, Block, Side Brush	2
17	VTAE87276	( )	Seeger Ext. D10 Din471	8
18	CMCV00386	( )	Cable Side Brush	2
19	41359	( )	Nut, Hex, Std, M6 X 1.00, 8	4
20	CMCV00009	( )	Clip Uni 1676	2
21	LAFN00803	( )	Arm, Brush, Lift	2
22	LAFN00153	( )	Bushing, Lever, Lift Brush	2
23	MPVR00081	( )	Bushing	2
24	MLML00027	( )	Spring Brush Central Knob	2
25	LAFN00523	( )	Spring Holder Brush Lift	2
26	MPVR00886	( )	Knob, Small, Brush Side	2
27	VTRS00010	( )	Washer Uni 6592 5x10 Zb	2
28	VTDD08171	( )	Nut, Autoblock	2
29	06532	( )	Screw, Soc, M6 X 1.00 X 25, 12.9	2
30	VTRS86634	( )	Washer Uni 6593 6x18x1,5 Zb	2
31	08708	( )	Nut, Hex, Lock, M6 X 1.00, Nl	2
32	76570	( )	Screw, Hex, M8 X 1.25 X 30, 8.8	2
33	VTDD87083	( )	Nut	2
34	MLML45102	( )	Spring Tr	2
35	LAFN11473	( )	Bracket	2
36	LAFN33802	( )	Bushing Ch.24 L.16 G 1/2 L9	2
37	RCDS21223	( )	Ring Nut 1/2 X 5 Nik	2
38	VTVT62920	( )	Screw Te F/Rond. M 6x 16 Zb	4

PROPEL MOTOR BREAKDOWN (MOCC00452)

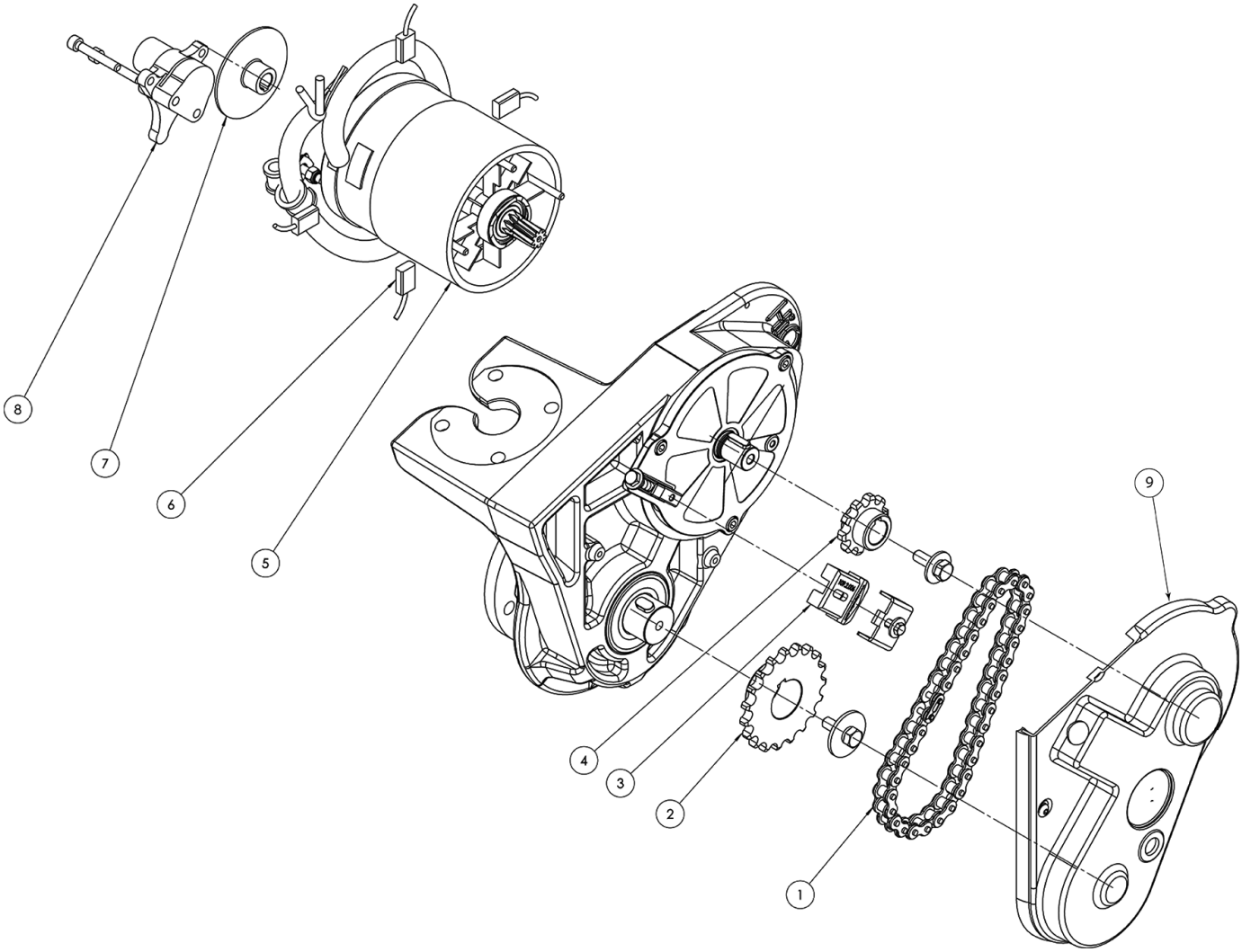

Ref.	Part No.	Mfr. Date	Description	Qty.
1	MTCR00104	( )	Chain	1
2	MTIG00130	( )	Pinion 1/2x5/16 Z19	1
3	LAFN08226	( )	Chain, Stretcher	1
4	MTIG00129	( )	Pinion 1/2x5/16 Z10	1
5	MOCC00461	( )	Traction Motor	1
6	MEVR02378	( )	Brush, Carbon, Motor	1
7	LAFN08224	( )	Disc	1
8	LAFN08225	( )	Disc Brake Caliper 1d.311	1
9	MPVR11196	( )	Cover, Crankcase Motor	1

MANUAL BATTERY WATERING KIT

(NA Market - Trojan 12V 225Ah Wet Battery 1070591)

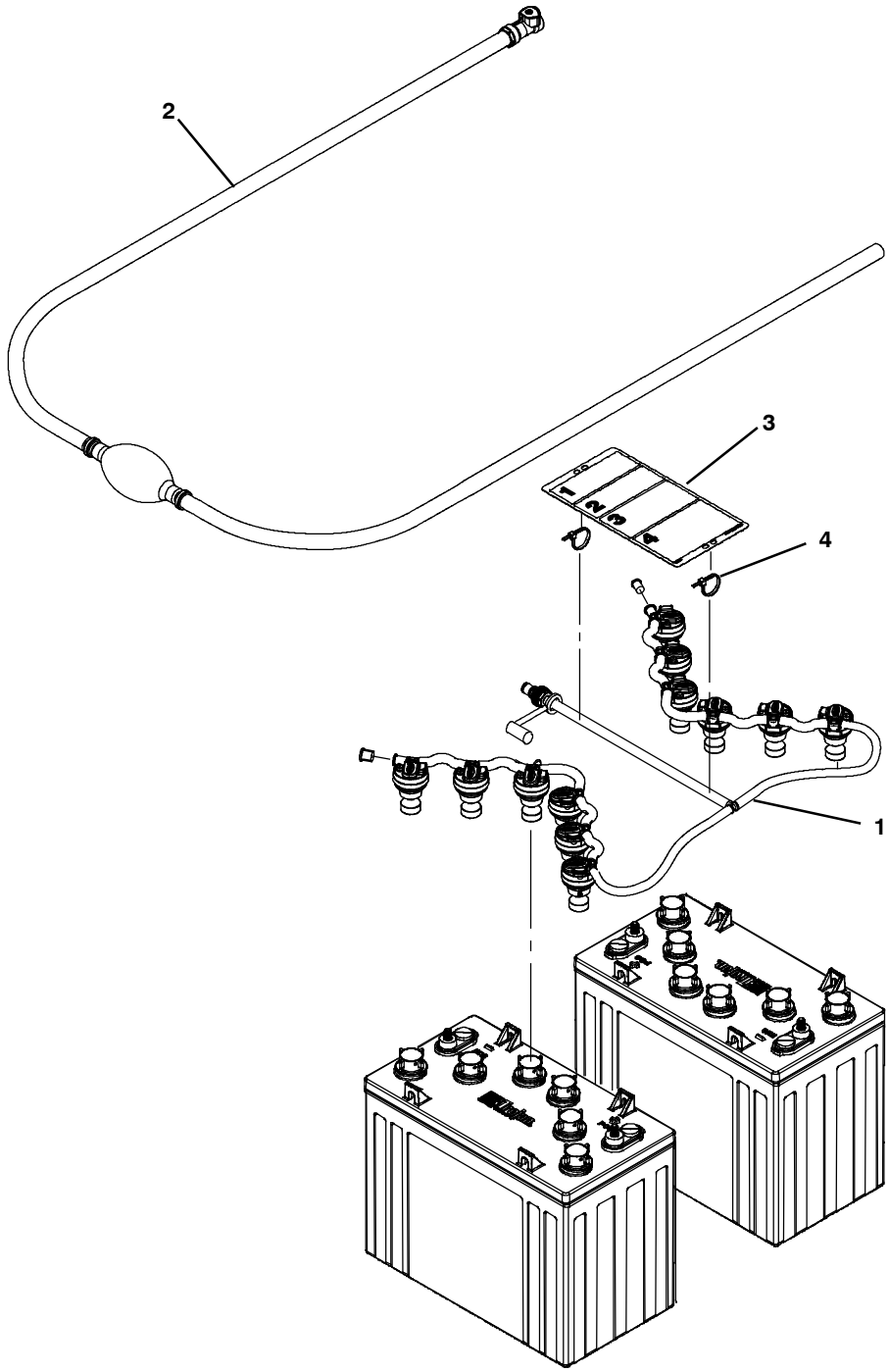

	Ref.	Part No.	Mfr. Date	Description	Qty.
∇		9021729	( )	FILL KIT, 12 VALVE, MNL, CI [TROJAN BATTERY]	1
▲	1	1257801	( )	MANIFOLD ASSY, WTR, BTRY, 12VLV [TROJAN]	1
▲	2	1236295	( )	PUMP, HAND, BATTERY	1
▲	3	1253250	( )	LABEL, TAG, BATTERY [BWT WATERING]	1
▲	4	130773	( )	TIE, CABLE, NYL, 11.0L, .14W, 3.0 MAX. D	2

∇ ASSEMBLY

▲ INCLUDED IN ASSEMBLY

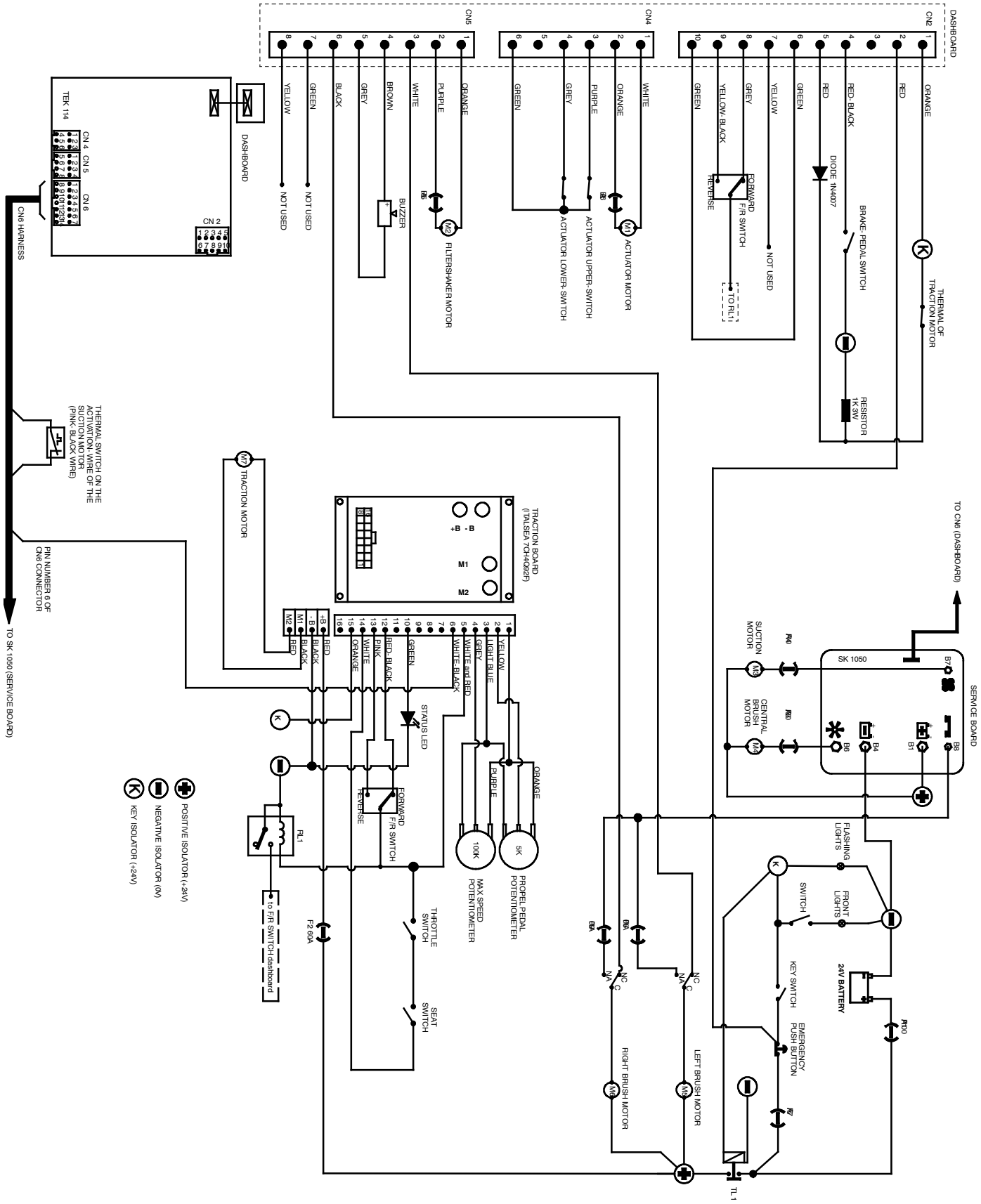
DASHBOARD
CN2
CN4
CN5
ORANGE
RED
RED- BLACK
YELLOW
GREEN
GREY
YELLOW, BLACK
GREEN
WHITE
ORANGE
PURPLE
GREY
GREEN
BROWN
WHITE
GREY
BLACK
GREEN
YELLOW
NOT USED
NOT USED
DIODE 1N4007
BRAKE- PEDAL SWITCH
THERMAL OF TRACTION MOTOR
RESISTOR 1K 3W
FORWARD
F/R SWITCH
REVERSE
TO RL11
ACTUATOR MOTOR
ACTUATOR UPPER-SWITCH
ACTUATOR LOWER- SWITCH
FILTERSHAKER MOTOR
BUZZER
DASHBOARD
TEK 114
CN 4
CN 5
CN 6
CN 2
CN6 HARNESS
THERMAL SWITCH ON THE ACTIVATION- WIRE OF THE SUCTION MOTOR (PINK- BLACK WIRE)
PIN NUMBER 6 OF CN6 CONNECTOR
TO SK 1050 (SERVICE BOARD)
TRACTION MOTOR
TRACTION BOARD (TALSEA 7CH4092F)
+B -B
M1
M2
TO CN6 (DASHBOARD)
SERVICE BOARD
SK 1050
SUCTION MOTOR
CENTRAL BRUSH MOTOR
FLASHING LIGHTS
FRONT LIGHTS
SWITCH
KEY SWITCH
EMERGENCY PUSH BUTTON
24V BATTERY
RIGHT BRUSH MOTOR
LEFT BRUSH MOTOR
TL 1
RED
BLACK
BLACK
RED
YELLOW
LIGHT BLUE
GREY
WHITE and RED
WHITE-BLACK
GREEN
RED- BLACK
PINK
WHITE
ORANGE
STATUS LED
FORWARD
F/R SWITCH
REVERSE
ORANGE
PURPLE
100K
5K
MAX SPEED POTENTIOMETER
PROPEL PEDAL POTENTIOMETER
THROTTLE SWITCH
SEAT SWITCH
RL1
to F/R SWITCH dashboard
F2 60A
KEY (ISOLATOR (+24V)
NEGATIVE ISOLATOR (0V)
POSITIVE ISOLATOR (-24V)