M20
(Gas/LPG)

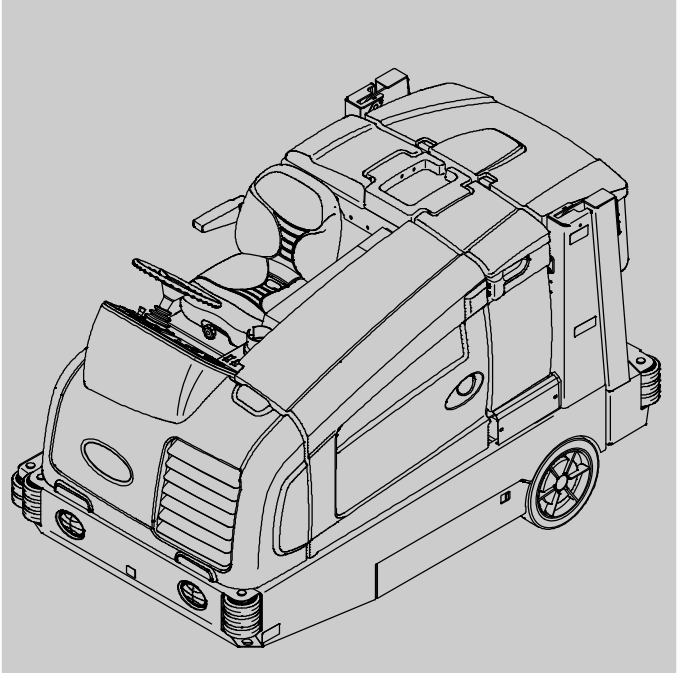

Scrubber–Sweeper Parts Manual

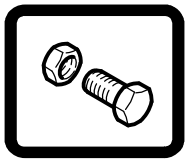

FaST® Foam Scrubbing Technology

ecH2O® An ORBIO™ Technology

The Safe Scrubbing Alternative®
ES® Extended Scrub System
Tennant*True®* Parts
Hygenic® Fully Cleanable Tanks
FloorSmart® Integrated Cleaning System
IRIS® a Tennant Technology

North America / International

For the latest Parts manuals and other language Operator manuals, visit:

www.tennantco.com/manuals

331381
Rev. 19 (5-2016)

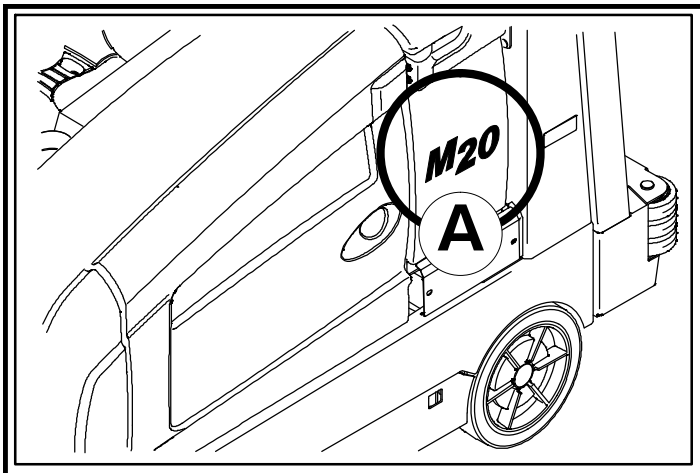

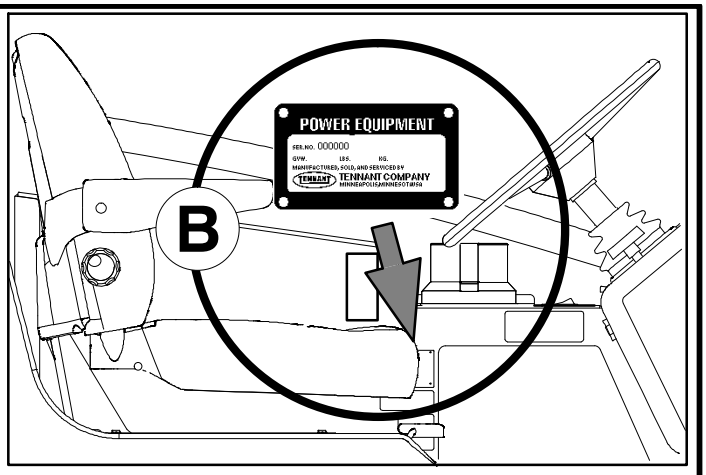

Ref	Part No.	Serial Number	Description	Qty.
1	82681	(000000–)	Bracket Wldt, Lpg Mount	1
▽ 2	63810	(000000–)	Latch Assy, Lpg Tank Mtg, W/Nut	4
▲ 3	51839	(000000–)	Nut Adjustable, Lpg Tank Mtg	2
4	49263	(000000–)	Tie, Cable	3
5	82556	(000000–001039)	Bracket, Vaporizer	1
6	54930	(000000–)	Vaporizer, LPG	1

D

C

EN

HOW TO ORDER PARTS – See diagram above

Only use TENNANT Company supplied or equivalent parts. Parts and supplies may be ordered online, by phone, by fax or by mail.

Follow the steps below to ensure prompt delivery.

1. **(A)** Identify the machine model.
2. **(B)** Identify the machine serial number from the data plate.
3. **(C)** Ensure the proper serial number is used from the parts list.
4. Identify the part number and quantity. Do not order by page or reference numbers.
5. Provide your name, company name, customer ID number, billing and shipping address, phone number and purchase order number.
6. Provide detail shipping instructions.

(D) ▽ – Identifies an assembly
▲ – Identifies parts included in assembly

Please fill out at time of installation for future reference.

Model No. – _____

Serial No. – _____

Machine Options – _____

Sales Rep. – _____

Sales Rep. phone no. – _____

Customer ID Number – _____

Installation Date – _____

Tennant Company
PO Box 1452
Minneapolis, MN 55440
Phone: (800) 553–8033 or (763) 513–2850
www.tennantco.com

Thermo–Sentry, Touch–N–Go, 1–STEP, Clean–Wedge, Variable Drain Valve, EasyOpen, Grip–N–Go, MaxPro2, Dura–Track, SmartRelease, InstantAccess, Duramer, FaST–PAK, ErgoSpace and Lower Total Cost of Ownership are trademarks of Tennant Company.

Specifications and parts are subject to change without notice.

Original Information, copyright © 2006 – 2016 TENNANT Company, Printed in U.S.A.

CN

如何订购部件 – 参见下表

仅使用 TENNANT 公司提供的或同等部件。部件和供应可以在线订购，通过电话、传真或邮件订购。

请遵循下面的步骤确保及时交付。

1. (A) 确定机器型号。
2. (B) 从数据标签确定机器序列号。
3. (C) 确保使用部件列表中的正确序列号。
4. 确定部件号和数量。
   不要按页面或参考编号订购。
5. 提供您的姓名、公司名称、客户 ID 号、付帐和送货地址、电话号码和采购单编号。
6. 提供详细的送货说明。

(D) ▽ – 确定组件
▲ – 确定组件中包含的组件

请在安装时填写供未来参考。

型号 – _____

序列号 – _____

机器选项 – _____

销售代表- _____

销售代表电话号码 – _____

客户 ID 编号 – _____

安装日期 – _____

ES

CÓMO SOLICITAR PIEZAS – Consulte el diagrama anterior.

Utilice sólo las piezas suministradas por TENNANT Company o piezas equivalentes. Puede solicitar las piezas a través de internet, por teléfono, por fax o por correo.

Siga los siguientes pasos para que la entrega sea rápida.

1. **(A)** Indique el modelo de máquina.
2. **(B)** Indique el número de serie de la etiqueta de datos.
3. **(C)** Asegúrese de que indica el número de serie correcto de la lista de piezas.
4. Indique la cantidad y el número de la pieza.
   No realice el pedidoindicando el número de página o el de referencia.
5. Incluya su nombre, el nombre de la empresa, el ID de cliente, las direcciones de envío y facturación, el número de teléfono y el número del pedido de compra.
6. Facilite instrucciones de envío.

(D) ▽ – identifica un conjunto
▲ – identifica piezas de un conjunto

Rellene estos datos cuando realice la instalación para utilizarlos como referencia en el futuro.

Nº modelo – _____

Nº serie – _____

Opciones de la máquina – _____

Vendedor – _____

Nº teléfono vendedor – _____

Nº cliente – _____

Fecha de instalación – _____

FR

COMMENT COMMANDER DES PIÈCES DÉTACHÉES – Voir le schéma ci-dessus.

Utilisez uniquement des pièces fournies par la société TENNANT ou équivalentes. Les pièces et fournitures peuvent être commandées en ligne, par téléphone, fax, ou par courrier.

Suivez les étapes ci-dessous pour assurer une livraison rapide.

1. **(A)** Identifiez le modèle de la machine.
2. **(B)** Identifiez le numéro de série de la machine, à partir de l'étiquette signalétique.
3. **(C)** Assurez-vous que le numéro de série correct est utilisé à partir de la liste de pièces détachées.
4. Identifiez le numéro de pièce et la quantité. Ne commandez pas par page ou numéros de référence.
5. Fournissez votre nom, le nom de votre société, votre numéro d'identification de client, l'adresse de facturation et d'expédition, le numéro de téléphone et le numéro du bon de commande.
6. Fournissez des instructions d'expédition détaillées.

(D) ▽ – identifie un assemblage
▲ – identifie les pièces composant l'assemblage

A remplir au moment de l'installation à titre de référence.

Nº du modèle – _____

Nº de série – _____

Options de la machine – _____

Agent commercial – _____

Nº tél. de l'agent commercial – _____

Numéro d'identification client – _____

Date d'installation – _____

JP

パーツの発注方法 ?上記の図を参照してください

TENNANT社製のパーツまたは同等品のみをお使いください。
パーツやサプライ品のご注文は、オンライン、電話、FAX、または手紙でお願いいたします。
確実にお届けできるように、以下の情報お知らせください。

1. (A) 製品のモデル名をお知らせください。
2. (B) 製品のデータラベルに印刷されているシリアル番号をお知らせください。
3. (C) パーツリストを参照して、シリアル番号が正しいかご確認ください。
4. パーツ番号と数量をお知らせください。マニュアル/カタログのページ番号や参照番号でのご注文はご遠慮ください。
5. お客様のお名前、会社名、顧客ID番号、請求/発送先住所、電話番号、注文書番号をお知らせください。
6. 発送に関するご希望があれば、明記してください。

(D) ▽ – アセンブリを示します
▲ – アセンブリに含まれるパーツを示します

後日確認できるように、設置時に記入してください。

モデルNo. – _____

シリアルNo. – _____

製品のオプション– _____

販売代理店 – _____

販売代理店の電話番号 – _____

顧客ID番号 – _____

設置日 – _____

General Recommended Maintenance Items

	Ref.	Part No.	Serial Number	Description	Qty.
▽		9002553	(000000–005999)	Maint Kit, Gas, 400hr[M20/T20]	1
▲		372575	(000000–005999)	Sparkplug [Gm]	4
▲		369746	(000000–005999)	Element, Fltr, Air [Dn]	1
▲		372440	(000000–005999)	Filter, Fuel [Gm 1.6l/3.0l]	1
▽		9002554	(000000–003122)	Maint Kit, Lpg, 400hr[M20/T20]	1
▲		372575	(000000–003122)	Sparkplug [Gm]	4
▲		369746	(000000–003122)	Element, Fltr, Air [Dn]	1
▲		372615	(000000–003122)	Filter Kit, Fuelock, Lpg	1
▽		9007382	(003123–005999)	Maint Kit, 400hr [M20/T20/M30 Lpg 2010]	1
▲		372575	(003123–005999)	Sparkplug [Gm, 1pick=1plug]	4
▲		369746	(003123–005999)	Element, Fltr, Air [Dn]	1
▲		9007380	(003123–005999)	Filter Kit, Fuelock, Lpg	1
▽		9002555	(000000–)	Maint Kit, Gas, 800hr[M20/T20]	1
▲		31613	(000000–)	Strainer, Hyd, 25 Gpm 100 Mesh	1
▲		25122	(000000–)	Cap, Breather, Hyd, 2.4 Ds	1
▲		1021579	(000000–)	Filter Assy, Hyd, 10mic	1
▲		372440	(000000–)	Filter, Fuel [Gm 1.6l/3.0l]	1
▽		9002613	(000000–003122)	Maint Kit, Lpg, 800hr[M20/T20]	1
▲		31613	(000000–003122)	Strainer, Hyd, 25 Gpm 100 Mesh	1
▲		25122	(000000–003122)	Cap, Breather, Hyd, 2.4 Ds	1
▲		1021579	(000000–003122)	Filter Assy, Hyd, 10mic	1
▲		372615	(000000–003122)	Filter Kit, Fuelock, Lpg	1
▽		9007381	(003123–)	Maint Kit, 800hr [M20/T20/M30 Lpg 2010]	1
▲		31613	(003123–)	Strainer, Hyd, 025gpm 100mesh 03psi	1
▲		25122	(003123–)	Cap, Breather, Hyd, 2.4 Ds	1
▲		1021579	(003123–)	Filter Assy, Hyd, 10mic	1
▲		9007380	(003123–)	Filter Kit, Fuelock, Lpg	1
		371972	(000000–005999)	Element, Fltr, Oil, Eng, Spin–On (GM)	1
		393982	(006000–)	Element, Fltr, Oil, Spin–On (Mits)	1
		1048295AM	(000000–)	Filter, Panl, Syn, 4.2 X 20.0 X 30.0	1
		1027290	(000000–)	Filter, Soltn, 20mesh, Pm12 3.1d 02.6l	1
		87866	(000000–)	Key, Ignition [Set Of 2]	1
		10137	(000000–)	Battery, Wet, 12vdc 0475cca	1
		20833	(000000–)	Wheel, 3.0d 1.38w 0.50b	2
		1033644	(000000–)	Belt, Ribbed, 38.5l	1
		1024586	(000000–)	Skirt, Neo, .06, 06.85w 27.95l, 08 Hole	2
		1019295	(000000–)	Skirt, Neo, .18, 10.37w 27.95l, 12 H&S	2
		1020166	(000000–)	Skirt, Neo, .06, 12.00w 45.88l, 07 Hole	1
		1022009	(000000–)	Skirt, Neo, .06, 06.38w 40.86l, 06 Hole	1
		1022007	(000000–)	Skirt, Rbr, .37, 04.50w 40.94l, 06 Hole	1
		1017868	(000000–)	Blade, Sqge, Front [Linard]	1
		1031331	(000000–)	Blade, Sqge, Rear, Linatex	1
		83874	(000000–)	Gasket, Sqge	2
		1031011	(000000–)	Blade, Sqge, 37.08l Linatex	2
		1027719	(000000–)	Blade, Sqge, Front, 49.59l Pyu	1
		1031945	(000000–)	Blade, Sqge, Rear, 53.78L Pyu	1
		1031823	(000000–)	Blade, Sqge, .38 3.55w 038.3l, Ure	2
		9010622	(006000–007114)	Plug, Spark	4
		9014160	(007115–)	Plug, Spark	4

General Recommended Maintenance Items

Ref.	Part No.	Serial Number	Description	Qty.
	1027716	(000000–003076)	Squeegee Assy, Sba, Ure	1
	1059091	(003077–)	Blade, Sqge, Side Brush, Urethane	1
	1059092	(003077–)	Blade, Sqge, Side Brush, Urethane	1
	1025005	(000000–003076)	Squeegee Assy, Sba, Linatex	1
	1046980	(003077–)	Blade, Sqge, Side Brush, Linatex	1
	1047238	(003077–)	Blade, Sqge, Side Brush, Linatex	1
	84597	(000000–)	Tire Assy, Solid, 18.0x6.0 4.5bc/5bolt	1
	16411	(000000–)	Paint, Airdry, Off–White, 12oz	1
	16412	(000000–)	Paint, Airdry, Teal, 12oz, Solid	1
	377540	(000000–)	Paint, Airdry, Blk, 12oz	1
	377538	(000000–)	Paint, Airdry, Gray, 12oz [Enamel]	1
	377537	(000000–)	Paint, Airdry, Iron Gray,12oz[Pwdr Coat]	1
	1057710	(000000–)	Oil, Hyd [El, Iso 100, 01gal]	1
	1057711	(000000–)	Oil, Hyd [El, Iso 100, 05gal]	1
	1069019	(000000–)	Oil, Hyd [El, Iso 68, 01gal]	1
	1069020	(000000–)	Oil, Hyd [El, Iso 68, 05gal]	1
	1057707	(000000–)	Oil, Hyd [El, Iso 32, 01gal]	1
	1057708	(000000–)	Oil, Hyd [El, Iso 32, 05gal]	1

SECTION 2

Contents **Page**

Fig. 1 – Brushes, Replacement, Scrub Head 2-3
Fig. 2 – Brushes, Replacement, Side Brush 2-4
Fig. 3 – Main Frame Group 2-6
Fig. 4 – Operator Station Group 2-8
Fig. 5 – Operator Station Insulation Group 2-10
Fig. 6 – Instrument Panel Group 2-12
Fig. 7 – Seat Group 2-14
Fig. 8 – Steering Group 2-16
Fig. 9 – Front Cover Group 2-18
Fig. 10 – Engine Cover Group 2-20

GM Engine **Page**

Fig. 11 – GM Engine and Mount Group (000000– 005999) 2-22
Fig. 12 – GM Engine EFI Group, Gasoline (000000–001999) 2-24
Fig. 13 – GM Engine EFI Group, Gasoline (002000–003122) 2-26
Fig. 14 – GM Engine EFI Group, Gasoline (003123–005999) 2-28
Fig. 15 – GM Engine EFI Group, LPG (000000–001999) 2-30
Fig. 16 – GM Engine EFI Group, LPG (002000–005999) 2-34
Fig. 17 – GM Engine Vaporizer Group, LPG (002000–003122) 2-36
Fig. 18 – GM Engine Vaporizer Group, LPG (003123–005999) 2-38
Fig. 19 – GM Engine Air Cleaner Group, Gasoline (000000–001999) 2-40
Fig. 20 – GM Engine Air Cleaner Group, Gasoline (002000–005999) 2-42
Fig. 21 – GM Engine Air Cleaner Group, LPG (000000–001999) 2-44
Fig. 22 – GM Engine Air Cleaner Group, LPG (002000–005999) 2-46
Fig. 23 – GM Engine Alternator and Fan Group (000000–005999) 2-48
Fig. 24 – GM Engine Muffler Group (000000–001999) 2-50
Fig. 25 – GM Engine Muffler Group (002000–005999) 2-52
Fig. 26 – GM Engine Radiator Group (000000–003038) 2-54
Fig. 27 – GM Engine Radiator and Mount Group (003039–005999) 2-58
Fig. 28 – GM Engine Radiator Hose Group (003039–005999) 2-60

Mitsubishi Engine **Page**

Fig. 29 – Mitsubishi Engine and Mount Group, Gas (006000–) . . 2-62

Mitsubishi Engine **Page**

Fig. 30 – Mitsubishi Engine and Mount Group, LPG (006000–) . . 2-64
Fig. 31 – Mitsubishi Engine EFI Group, Gasoline (006000–) 2-66
Fig. 32 – Mitsubishi Engine EFI Group, LPG (006000–) 2-68
Fig. 33 – Mitsubishi Engine Air Cleaner Group, Gasoline (006000–) 2-70
Fig. 34 – Mitsubishi Engine Air Cleaner Group, LPG (006000–) 2-72
Fig. 35 – Mitsubishi Engine Alternator and Fan Group (006000–) 2-74
Fig. 36 – Mitsubishi Engine Muffler Group (006000–) 2-76
Fig. 37 – Mitsubishi Engine Radiator and Mount Group (006000–) . . 2-78
Fig. 38 – Mitsubishi Engine Radiator Hose Group (006000–) 2-80

Contents **Page**

Fig. 39 – Engine Fuel Tank Group, Gasoline (000000–001999) 2-82
Fig. 40 – Engine Fuel Tank Group, Gasoline (002000–) 2-84
Fig. 41 – Engine Fuel Tank Group, LPG . . . 2-86
Fig. 42 – Battery and Electrical Group 2-88
Fig. 43 – Wheel Group, Front Drive 2-90
Fig. 44 – Wheel Group, Rear 2-92
Fig. 45 – Brake Pedal Linkage Group 2-94
Fig. 46 – Directional Pedal Group 2-96
Fig. 47 – Hydraulic Pump Linkage Group . . 2-98
Fig. 48 – Hopper Lift Arms Group 2-100
Fig. 49 – Hopper and Debris Screen Group 2-102
Fig. 50 – Hopper Cover and Dust Filter Group 2-104
Fig. 51 – Hopper Bumper Group 2-106
Fig. 52 – Hopper Door Group (000000–003061) 2-108
Fig. 53 – Hopper Door Group (003062–) 2-110
Fig. 54 – Cylindrical Scrub Brush Drive Group, Left Side 2-112
Fig. 55 – Cylindrical Scrub Brush Drive Group, Right Side 2-114
Fig. 56– Cylindrical Scrub Brush Head Lift Group 2-116
Fig. 57 – Cylindrical Brush Head Skirt Group 2-118
Fig. 58 – Squeegee Lift Group, Rear 2-120
Fig. 59 – Squeegee Group, Rear 2-122
Fig. 60 – Squeegee Linkage Group, Rear . 2-124
Fig. 61 – Squeegee Group, Right Side . . . 2-126
Fig. 62 – Squeegee Lift Group, Right Side 2-128
Fig. 63 – Squeegee Group, Left Side 2-130
Fig. 64 – Squeegee Lift Group, Left Side . 2-132

Contents **Page**

Fig. 65 – Solution Tank Group 2-134
Fig. 66 – Solution Tank Drain Group 2-138
Fig. 67 – Solution Control Group 2-140
Fig. 68 – Recovery Tank Group 2-142
Fig. 69 – Recovery Tank Drain Group 2-144
Fig. 70 – Vacuum Fan Group, Scrubbing (000000–006877) 2-146
Fig. 71 – Vacuum Fan Group, Scrubbing (006878–) 2-148
Fig. 72 – Vacuum Fan Group, Sweeping . . 2-150
Fig. 73 – Hydraulic Schematic (000000–002699) 2-152
Fig. 74 – Hydraulic Schematic (002700–003297) 2-154
Fig. 75 – Hydraulic Schematic (003298–) 2-156
Fig. 76 – Hydraulic Hose Group, Steering and Propel 2-158
Fig. 77 – Hydraulic Hose Group, Pump and Vacuum Fans (000000–006877) 2-160
Fig. 78 – Hydraulic Hose Group, Pump and Vacuum Fans (006878–) . 2-162
Fig. 79 – Hydraulic Hose Group, Brush and Hopper 2-164
Fig. 80 – Hydraulic Hose Group, Squeegee Lift 2-166
Fig. 81 – Hydraulic Pumps Group 2-168
Fig. 82 – Hydraulic Cooler and Tubes Group2-170
Fig. 83 – Hydraulic Reservoir Group 2-172
Fig. 84 – Hydraulic Valves Group (000000–002699) 2-174
Fig. 85 – Hydraulic Valve Group (002700–) 2-176

GM Engine **Page**

Fig. 86 – GM Electrical Schematic (000000–001999) 2-178
Fig. 87 – GM Electrical Schematic (002000–002532) 2-182
Fig. 88 – GM Electrical Schematic (002533–005999) 2-186
Fig. 89 – GM Electrical Schematic (003479–005999) 2-192
Fig. 90 – GM Electrical Schematic, Gas/LPG Engine Harness (000000–001999) 2-196
Fig. 91 – GM Electrical Schematic, Gas Engine Harness (002000–003122) 2-198
Fig. 92 – GM Electrical Schematic, Gas Engine Harness (003123–005999) 2-200
Fig. 93 – GM Electrical Schematic, LPG Engine Harness (002000–003122) 2-202
Fig. 94 – GM Electrical Schematic, LPG Engine Harness (003123–005999) 2-204

Mitsubishi Engine **Page**

Fig. 95 – Mitsubishi Electrical Schematic (006000–) 2-206
Fig. 96 – Mitsubishi Electrical Schematic, Gas Engine Harness (006000–) 2-212
Fig. 97 – Mitsubishi Electrical Schematic, LPG Engine Harness (006000–) 2-214

Contents **Page**

Fig. 98 – Electrical Wire Harnesses Group , Main 2-216
Fig. 99 – Electrical Wire Harness Group, Headlight 2-230
Fig. 100 – Electrical Wire Harness Group, Hopper 2-231
Fig. 101 – Electrical Wire Harness Group, Hopper Cover 2-234
Fig. 102 – Electrical Wire Harness Group, Gasoline/LPG Engine 2-236
Fig. 103 – Electrical Wire Harness Group, Gasoline/LPG Engine Adapter Harness without Telemetry 2-239
Fig. 104 – Label Group 2-240

Fig. 1 – Brushes, Replacement, Scrub Head

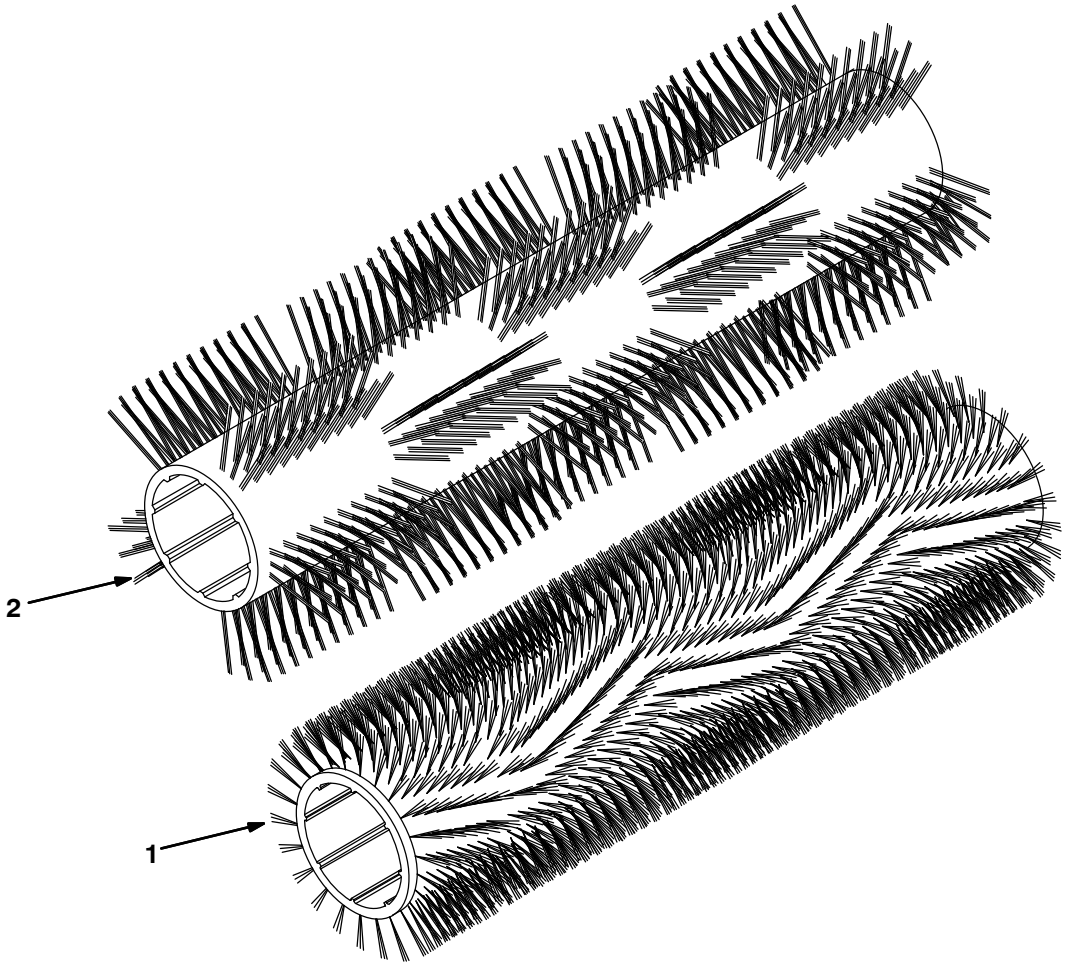

354408 – M20

Ref.	Part No.	Serial Number	Description	Qty.
1	1026223	(000000–)	Brush, Sweep / Scb, 40L, Polypropylene	2
1	1026222	(000000–)	Brush, Sweep / Scb, 40L, Super Abrasive	2
1	1027697	(000000–)	Brush, Sweep / Scb, 40L, Polyester	2
1	1030969	(000000–)	Brush, Sweep / Scb, 40L, Heavy Duty Polypropylene	2
2	1040524	(000000–)	Brush, Sweep / Scb, 40L, Wndw, Polypropylene	1
2	1059640	(000000–)	Brush, Sweep / Scb, 40L, Wndw, Super Abrasive	1

Fig. 2 – Brushes, Replacement, Side Brush

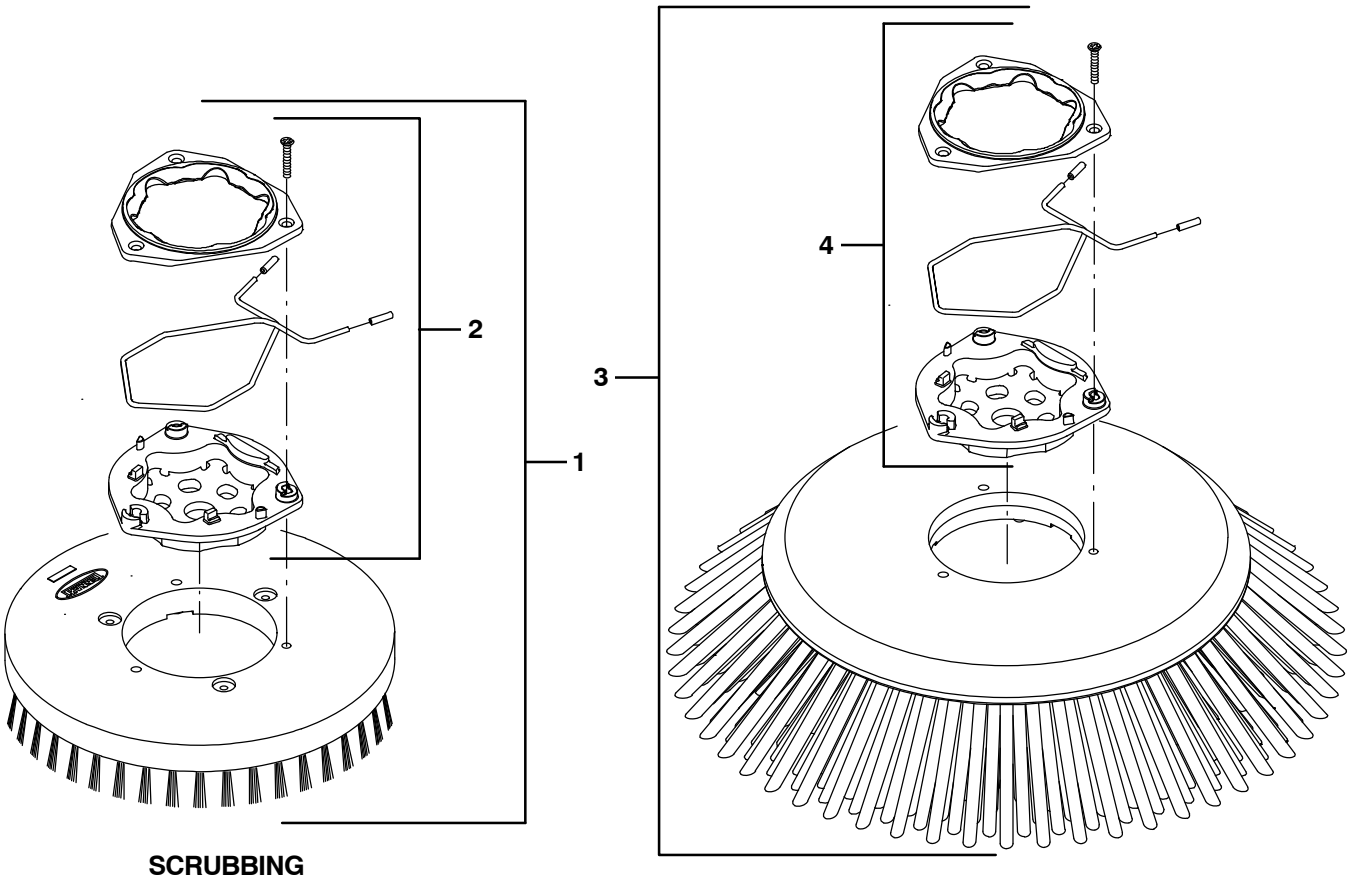

SCRUBBING SIDE BRUSH

SWEEPING SIDE BRUSH

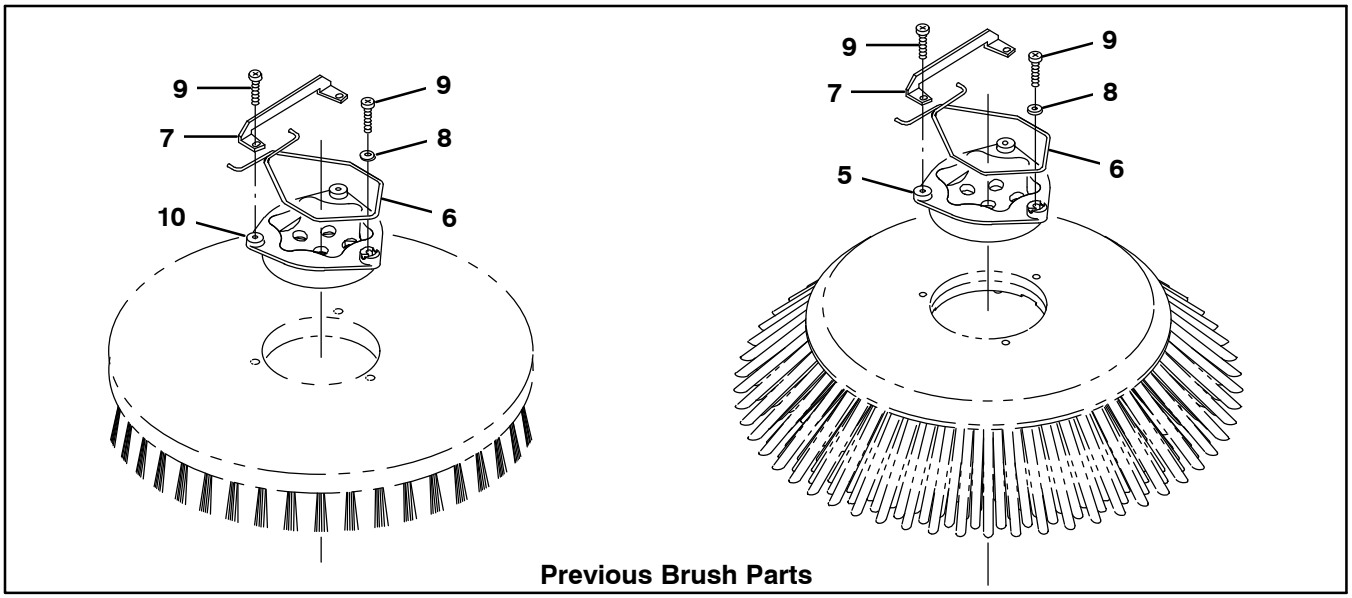

Previous Brush Parts

354584

Fig. 2 – Brushes, Replacement, Side Brush

	Ref.	Part No.	Serial Number	Description	Qty.
▽	1	1220235	(000000–)	Brush Assy, Disk, Scb, 16.0d, Nylon	1
▲	2	9014662	(000000–)	Brush Kit, Hub Assy, Drive, Ci [Hdpe In]	1
▽	1	1220236	(000000–)	Brush Assy, Disk, Scb, 16.0d, Heavy Duty Polypropylene	1
▲	2	9014662	(000000–)	Brush Kit, Hub Assy, Drive, Ci [Hdpe In]	1
▽	1	1221543	(000000–)	Brush Assy, Disk, Scb, 16.0d, Super Abrasive	1
▲	2	9014662	(000000–)	Brush Kit, Hub Assy, Drive, Ci [Hdpe In]	1
▽	3	1220185	(000000–)	Brush Assy, Disk, Swp, 24.0d, Polypropylene	1
▲	4	9014666	(000000–)	Brush Kit, Hub Assy, Drive, Ci [Uhmw]	1
				Previous Brush Parts	
	5	1017368	(000000–)	Hub, Drive, Brush, Disk, 3hole 5.8bc	1
	6	14838	(000000–)	Spring, Wir, 0.16d, Brush Retaining	1
	7	24299	(000000–)	Bracket, Retainer, Spring	1
	8	01684	(000000–)	Washer, Flat, 0.27b 0.69d .05, Ss	1
	9	32746	(000000–)	Screw, Pan, Phl, M6 X 1.00 X 35, Ss	3
	10	15539	(000000–)	Hub, Drive, Brush, Disk, 3hole 5.8bc[6t]	1
		1042500	(000000–)	Brush Assy, Disk, Scrub, 16.0 D, Heavy Duty Polypropylene (Replaced by 1220236)	1
		1042504	(000000–)	Brush Assy, Disk, Scrub, 16.0 D, Super Abrasive (Replaced by 1221543)	1
		1042499	(000000–)	Brush Assy, Disk, Scrub, 16.0D, Nylon (Replaced by 1220235)	1
		1027688	(000000–)	Brush Assy, Disk, Sweep, 24.oD, Polypropylene (Replaced by 1220185)	1

Fig. 3 – Main Frame Group

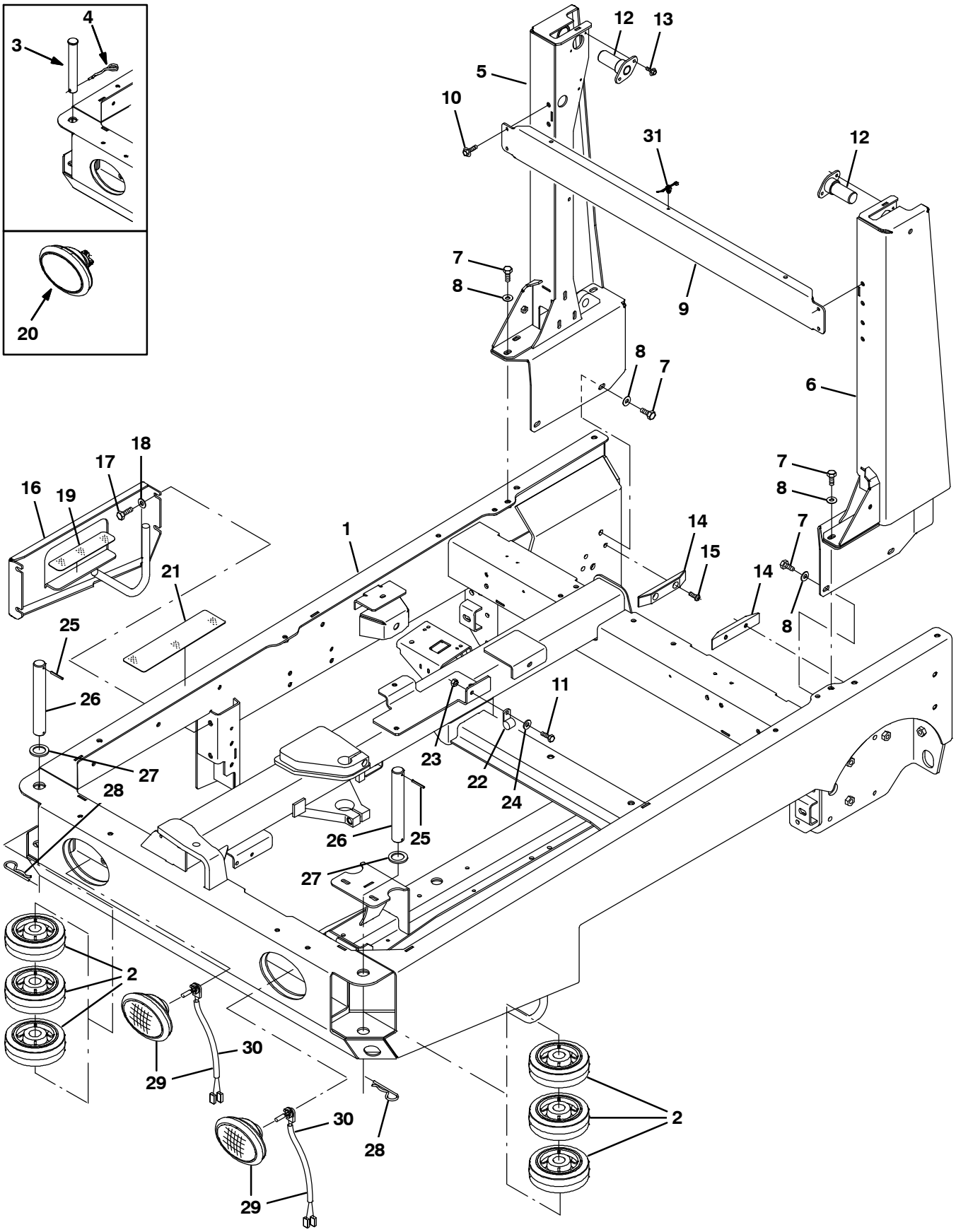

354406

Fig. 3 – Main Frame Group

	Ref.	Part No.	Serial Number	Description	Qty.
	1	9002401	(000000–)	Frame Wldt, Main, Replmt [m20 & T20]	1
	2	1060130	(000000–)	Wheel, 06.0D 2.00W 1.19B, Gray Rbr	6
	3	9006334	(000000–003062)	Pin Kit, Wheel, Ci [M20/T20/M30]	2
	4	761490	(000000–003062)	Pin, Cotter, Hair, Dbl	2
	5	9002400	(000000–)	Tower, Wldt, Lift, Rh, Replmt [M20]	1
	6	9002399	(000000–)	Tower, Wldt, Lift, Lh, Replmt [M20]	1
	7	39283	(000000–)	Screw, Hex, M10 X 1.5 X 25, 8.8	10
	8	32492	(000000–)	Washer, Flat, 0.38 Std	10
	9	1017791	(000000–)	Channel, Upper, Tower, Lift	1
	10	1037346	(000000–)	Screw, Hex, M8 X 1.25 X 25, 9.8, Sems	4
	11	39277	(001338–)	Screw, Hex, M8 X 1.25 X 25, 8.8	1
	12	1019251	(000000–)	Pin Wldt, Pivot, Hppr	2
	13	74455	(000000–)	Screw, Hex, M6 X 1.0 X 12, Fmg	4
	14	1021327	(000000–)	Block, Guide, Hppr	2
	15	367771	(000000–)	Screw, Pan, M8 X 1.25 X 25, Ss	4
	16	1027916	(000000–)	Panel Wldt, Filler	1
	17	12317	(000000–)	Screw, Hex, M10 X 1.5 X 30, Ss	4
	18	01686	(000000–)	Washer, Flat, 0.44b 1.00d .08, Ss	4
	19	363458	(000000–)	Tread, Non–Skid, 01.9w 08.0l	1
▽	20	1019225	(000000–003382)	Headlight, 12vdc, 27watt, 2.1a, Oval (Rpl by 1060942)	2
▲		1031826	(000000–003382)	Lamp, 12vdc [Speaker]	1
▲		1031827	(000000–003382)	Receptacle, Lamp [Speaker]	1
	21	58819	(000000–)	Tread, Non–Skid, 03.0w 11.6l	1
	22	53466	(001338–)	Clamp, Cable, Stl, 1.50d X 1.00w, 1hole	1
	23	08709	(001338–)	Nut, Hex, Lock, M8 X 1.25, Nl	1
	24	32491	(001338–)	Washer, Flat, 0.31, Std	1
	25	23146	(003063–)	Pin, Roll, .187d X 1.62l, .187/.192	2
	26	1053838	(003063–)	Pin, 30mmd X 215mml	2
	27	1062566	(003063–)	Washer, Flat, 1.26B 1.88D .13, Stl, Pl	2
	28	34411	(003063–)	Pin, Cotter, Hair, 1.00d .178 Wir	2
▽	29	1060942	(003383–)	Headlight, 12Vdc, Oval, Halogen	2
▲	30	9007513	(003383–)	Lamp, Halogen [Speaker]	1
	31	1210807	(000000–)	Wire, Tie [W/.25” Fir Tree Clip]	1

Fig. 4 – Operator Station Group

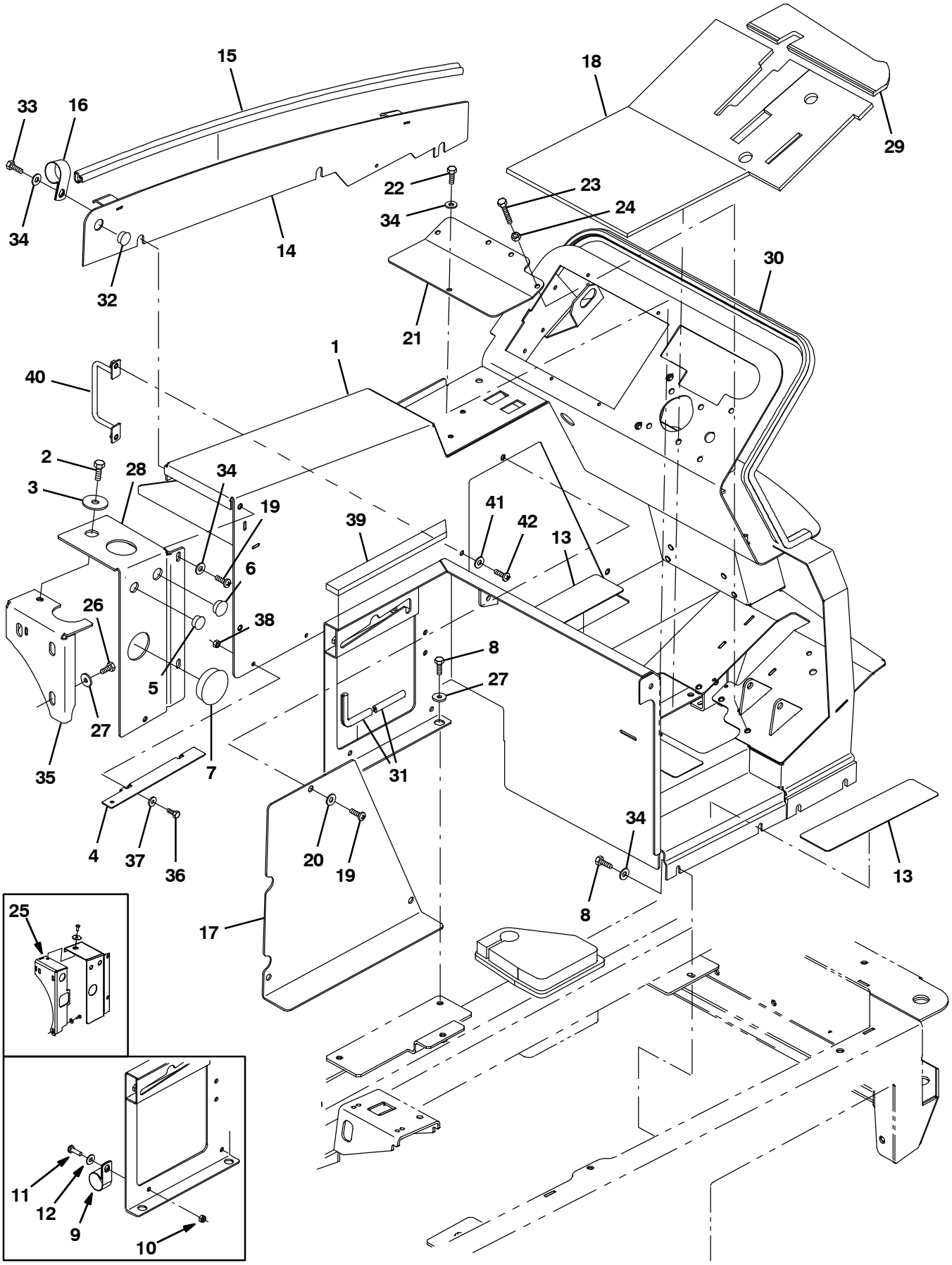

354407 – G/LP, NA

Fig. 4 – Operator Station Group

Ref.	Part No.	Serial Number	Description	Qty.
1	9002409	(000000–)	Panel Wldt, Gas, Replmt	1
1	9002380	(000000–)	Panel Wldt, Gas, Replmt [W/Fast]	1
1	9002381	(000000–)	Panel Wldt, Gas, W/ Es, Replmt	1
1	9003422	(000000–)	Panel Wldt, Gas, Replmt, TJ (Japan only)	1
1	9003425	(000000–)	Panel Wldt, Gas, Replmt, TJ [W/Fast] (Japan only)	1
1	9003428	(000000–)	Panel Wldt, Gas, Replmt, TJ, W/Es (Japan only)	1
1	9003431	(000000–)	Panel Wldt, LPG, Replmt	1
1	9003432	(000000–)	Panel Wldt, LPG, Replmt [W/Fast]	1
1	9003433	(000000–)	Panel Wldt, LPG, Replmt, W/Es	1
1	9003423	(000000–)	Panel Wldt, LPG, Replmt, TJ (Japan only)	1
1	9003426	(000000–)	Panel Wldt, LPG, Replmt, TJ [W/Fast] (Japan only)	1
1	9003429	(000000–)	Panel Wldt, LPG, Replmt, TJ, W/Es (Japan only)	1
2	39283	(000000–)	Screw, Hex, M10 X 1.5 X 25, 8.8	1
3	04414	(000000–)	Washer, Flat, 0.53b 1.88d .12, Stl, Pl	1
4	1047169	(000000–)	Bracket, Mtg, Insulation	2
5	82727	(000000–)	Plug, Hole, Rnd, 0.88h .03–.12, Blk Nyl	1
6	01493	(000000–)	Plug, Hole, Rnd, 1.00h .03–.12, Blk Nyl	1
7	1030017	(000000–)	Plug, Hole, Rnd, 2.50h .03–.25, Blk Nyl	1
8	16931	(000000–)	Screw, Hex, M8 X 1.25 X 20, 8.8	8
9	70157	(000000–001337)	Clamp, Cable, Ss, 2.50d X 1.00w, 1h	1
10	08709	(000000–001337)	Nut, Hex, Lock, M8 X 1.25, Nl	2
11	39277	(000000–001337)	Screw, Hex, M8 X 1.25 X 25, 8.8	7
12	32491	(000000–001337)	Washer, Flat, 0.31, Std	18
13	58819	(000000–)	Tread, Non–Skid, 03.0w 11.6l	4
14	1025435	(000000–001999)	Panel Wldt, Adj	1
14	1035832	(002000–)	Panel Wldt, Adj [2007]	1
15	1030593	(000000–)	Seal, Afmkt, Bulb, 90, 0.75d F/11ga 08ft	1
16	53466	(000000–)	Clamp, Cable, Stl, 1.50d X 1.00w, 1h	5
17	1021834	(000000–)	Panel, Access, Door	1
18	1027218	(000000–)	Mat, Floor	1
19	1031665	(000000–)	Screw, Pan, M8 X 1.25 X 25, Blk	4
20	39349	(000000–)	Washer, Flat, 0.31 Sae	3
21	1022699	(000000–)	Panel, Access, Floor	1
22	16931	(000000–)	Screw, Hex, M8 X 1.25 X 20, 8.8	4
23	363976	(000000–)	Screw, Hex, M8 X 1.25 X 60, 8.8, Fl	1
24	39311	(000000–)	Nut, Hex, Std, M8 X 1.25	1
25	1020540	(000000–002412)	Bracket Wldt, Mtg, Tank	1
26	09740	(000000–)	Screw, Hex, M8 X 1.25 X 20, Ss	3
27	1017218	(000000–)	Washer, Flat, 0.32b 1.00d .12, Ss	5
28	1033975	(000000–)	Bracket, Mtg	1
29	1027267	(000000–)	Mat, Floor	1
30	1020904	(000000–)	Seal, Panl, Instmt	1
31	1020168	(000000–)	Molding, Afmkt, Trim, Pvc, .08 .11, 1ft	1
32	80288	(002000–)	Plug, Hole, Rnd, 0.81h, Blk	1
33	39277	(000000–)	Screw, Hex, M8 X 1.25 X 25, 8.8	6
34	32491	(000000–)	Washer, Flat, 0.31, Std	17
35	1035997	(002413–)	Bracket Wldt, Mtg, Tank	1
36	06942	(000000–)	Screw, Hex, M6 X 1.00 X 16, 8.8	2
37	32490	(000000–)	Washer, Flat, 0.25, Std	2
38	08708	(000000–)	Nut, Hex, Lock, M6 X 1.00, Nl	2
39	1047295	(000000–)	Seal, Foam, 0.50	1
40	1071616	(006000–)	Bracket Wldt, Mtg, Hose	1
41	1031665	(006000–)	Screw, Pan, M8 X 1.25 X 25, Blk	2
42	39349	(006000–)	Washer, Flat, 0.31 Sae	2

Fig. 5 – Operator Station Insulation Group

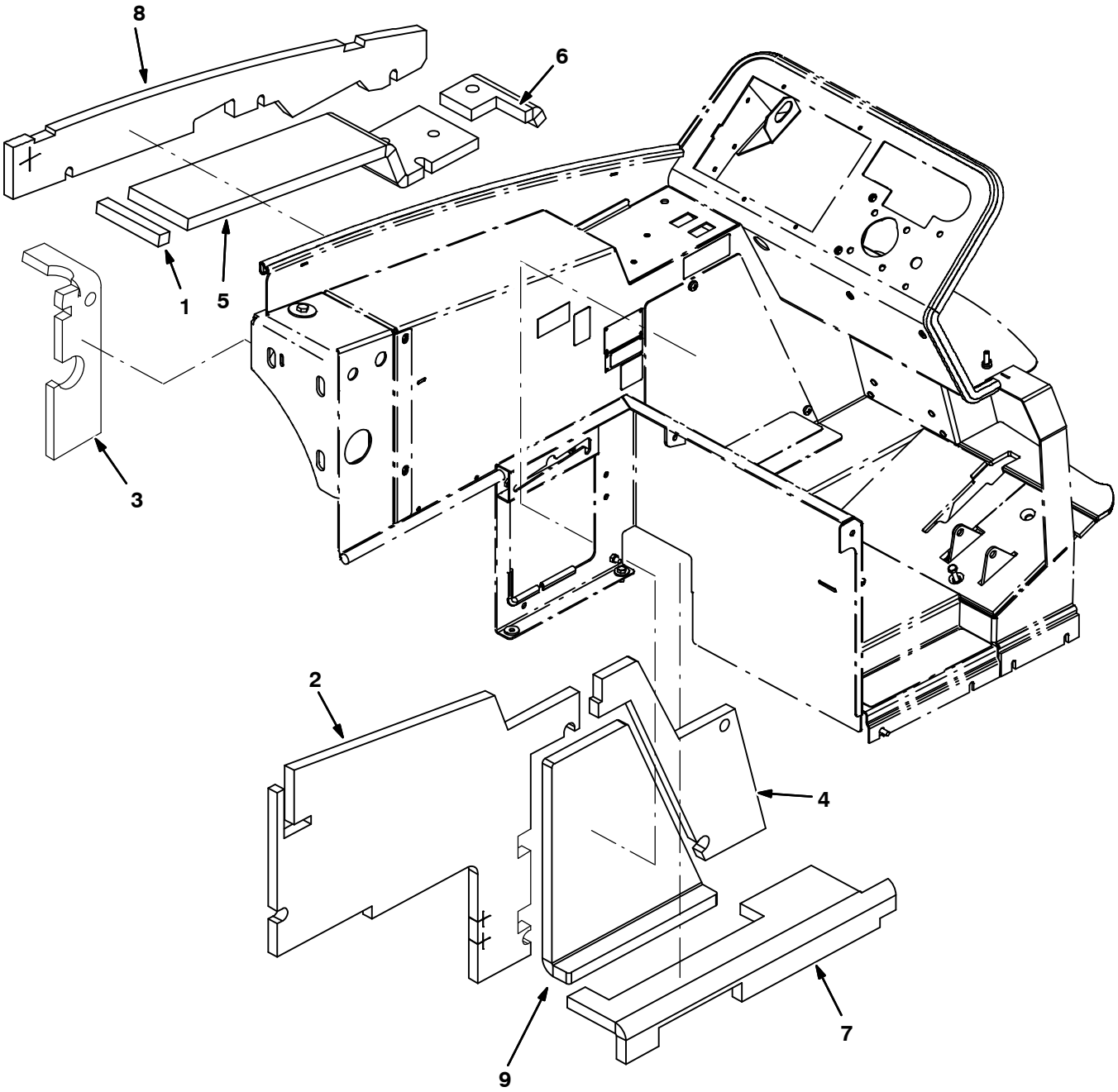

354409

Fig. 5 – Operator Station Insulation Group

Ref.	Part No.	Serial Number	Description	Qty.
1	1034769	(000000–)	Insulation, Flame–retardant, 0.75–0.88	1
2	1034765	(000000–)	Insulation, Flame–retardant, 0.75–0.88	1
3	1040841	(000000–)	Insulation, Flame–Retardant, 0.75–0.88	1
4	1023464	(000000–)	Insulation, Flame–Retardant, 0.75–0.88	1
5	1034764	(000000–)	Insulation, Flame–retardant, 0.75–0.88	1
6	1034766	(000000–)	Insulation, Flame–retardant, 0.75–0.88	1
7	1034768	(000000–)	Insulation, Flame–retardant, 0.75–0.88	1
8	1034770	(000000–)	Insulation, Flame–retardant, 0.75–0.88	1
9	1023569	(000000–)	Insulation, Flame–Retardant, 0.75–0.88	1

Fig. 6 – Instrument Panel Group

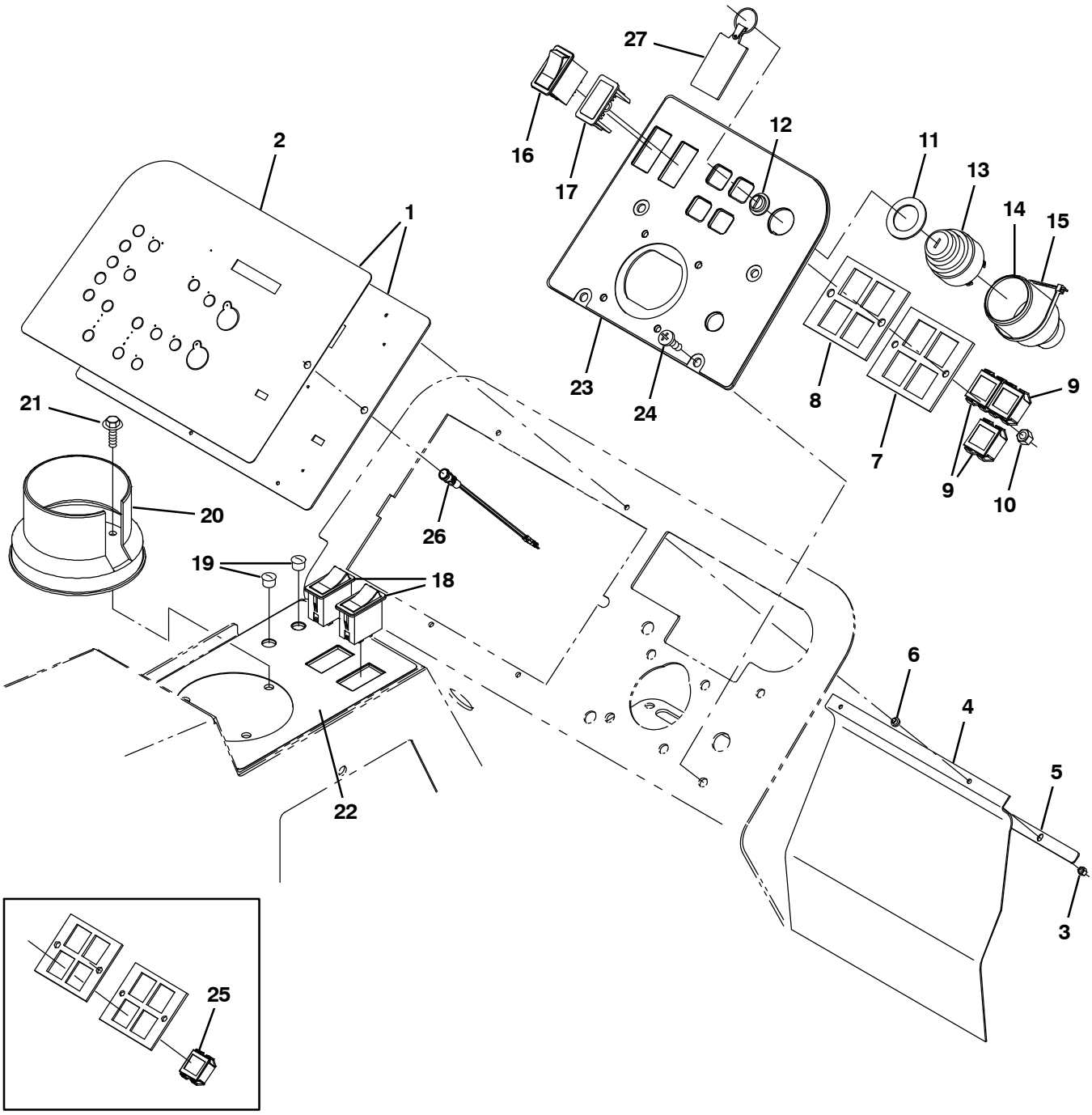

354410 – G/LP, NA

Fig. 6 – Instrument Panel Group

	Ref.	Part No.	Serial Number	Description	Qty.
▽	1	9003453	(000000–)	Panel Kit, Instmt, Repair [M20/M30]	1
▲	2	9002435	(000000–)	Label Kit, Panel, Replmt [M20]	1
▽	1	9007912	(000000–)	Panel, Kit, Instmt, Replmt [M20/M30 ec–H20 only]	1
▲	2	9007913	(000000–)	Label Kit, Panel, Replmt [M20/M30 ec–H20 only]	1
	3	16968	(000000–)	Nut, Hex, Lock, #08–32, Nl	4
	4	1028769	(000000–)	Flap, Battery	1
	5	1028772	(000000–)	Bar, Flat, Ss, .06 X .50 X 10.0l 2/.19sl	1
	6	1029362	(000000–)	Washer, Shld, Nyl [8–32]	4
	7	361071	(000000–)	Plate, Mtg, Light	1
	8	361073	(000000–)	Seal, Rbr, Clsd, 0.13, Instmt Panl	1
	9	361075	(000000–)	Light, Panl, 14vdc, , 1.1 X 1.0	3
	10	08712	(000000–)	Nut, Hex, Lock, M6 X 1.0, Ss, Nl	2
	11	73736	(000000–)	Washer, Flat, 1.15b 1.75d .08, Stl	1
	12	382516	(000000–)	Boot, .63id .29l .90w	1
▽	13	87536	(000000–)	Switch, Ignition [Ku]	1
▲		87866	(000000–)	Key, Ignition [Set Of 2]	1
	14	383165	(000000–)	Boot, Switch, Ignition	1
	15	49266	(000000–)	Tie, Cable, Nyl, 07.3l .19w 1.8 Max D	2
	16	392171	(000000–)	Switch, Rocker, Dpdt On/Off/On	1
	17	398501	(000000–)	Plug, Hole, Rt, Rocker Switch, .87 X 1.7	1
	18	398508	(000000–)	Switch, Rocker, Dpdt Mom/Off/Mom	2
	19	56992	(000000–)	Plug, Hole, Rnd, 0.50h .03–.12, Blk Nyl	1
	20	223599	(000000–)	Cup Holder, Rwk	1
	21	1036892	(000000–)	Screw, Hex, M6 X 1.00 X 25, 9.8 Sems	3
	22	1024287	(000000–)	Label, Switch, Rocker [M20/M30]	1
	23	9004880	(000000–)	Panel, Instmt, Rh, Gas, Replmt	1
	23	9002391	(000000–)	Panel, Instmt, Rh, Lpg, Replmt	1
	23	9002392	(000000–)	Panel, Instmt, Rh, Lpg, Replmt, Ce (Japan and CE Only)	1
	24	1031665	(000000–)	Screw, Pan, M8 X 1.25 X 25, Blk	4
	25	361075	(000000–002886)	Light, Panl, 14vdc, , 1.1 X 1.0	1
	26	1041822	(000000–)	Light, Led, .312D, 2 Volt [Tri–Color] (ec–H20 only)	1
	27	1075003	(000000–)	Keychain, Rectangle, Parts & Service	1

Fig. 7 – Seat Group

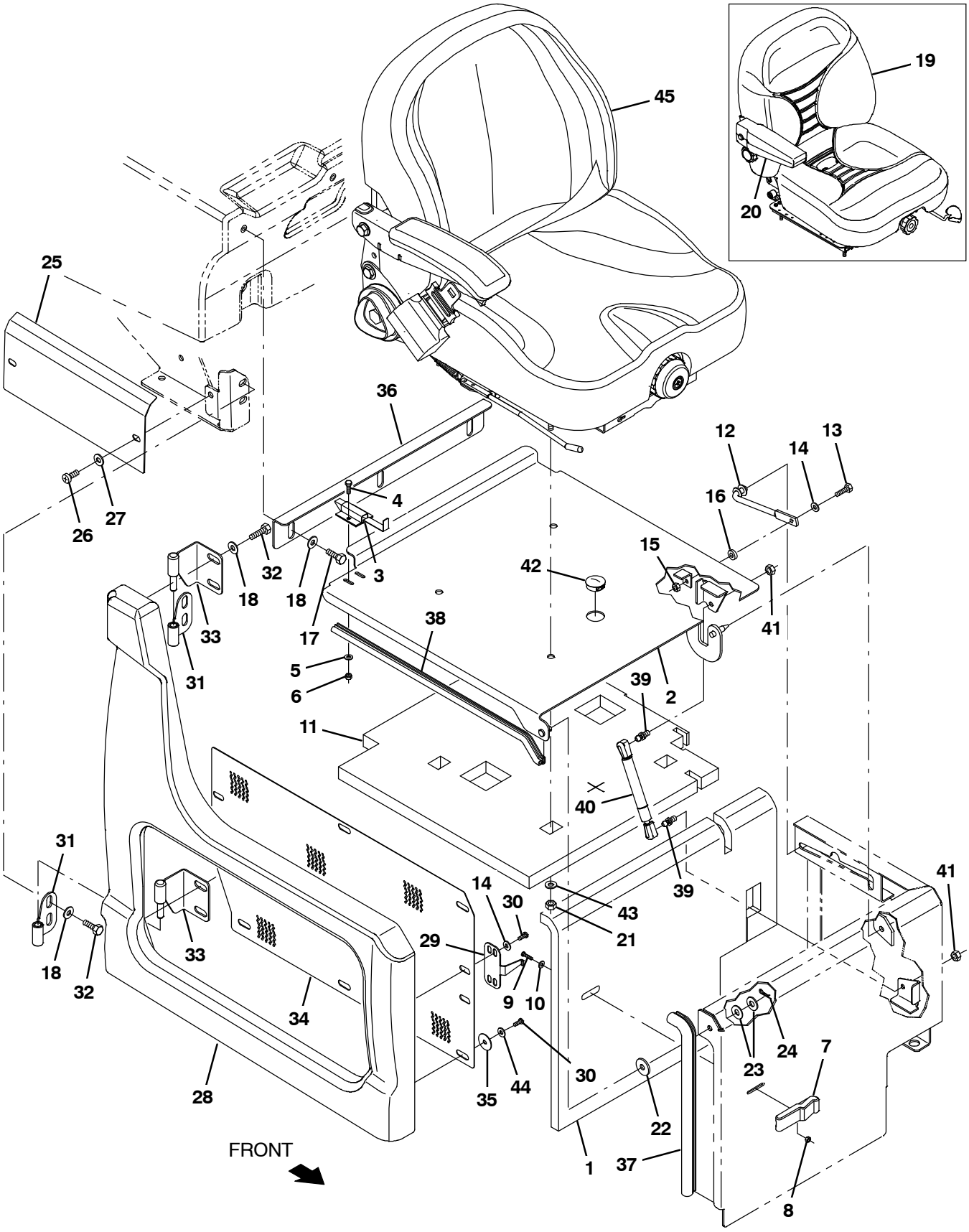

354411 – NA

Fig. 7 – Seat Group

	Ref.	Part No.	Serial Number	Description	Qty.
	1	1034767	(000000–)	Insulation, Flame–retardant, 0.75–0.88	1
	2	1019228	(000000–)	Plate Wldt, Seat	1
	3	1025736	(000000–)	Latch	1
	4	09252	(000000–)	Screw, Hex, M5 X 0.8 X 20, 8.8	2
	5	19066	(000000–)	Washer, Flat, #10	2
	6	06549	(000000–)	Nut, Hex, Lock, M5 X 0.8, Nl	2
	7	49800	(000000–)	Latch	1
	8	02850	(000000–)	Nut, Hex, Lock, M4 X 0.7, Nl	4
	9	06929	(000000–)	Screw, Pan, M4 X 0.7 X 25, 4.8	4
	10	19065	(000000–)	Washer, Flat, #08	2
	11	1023499	(000000–)	Insulation, Flame–Retardant, 1.0	1
	12	223080	(000000–)	Arm Wldt, Safety, Sppt, Seat, .38d 06.5d	1
	13	06943	(000000–)	Screw, Hex, M6 X 1.0 X 20, 8.8	1
	14	32483	(000000–)	Washer, Flat, 0.25 Sae	9
	15	08708	(000000–)	Nut, Hex, Lock, M6 X 1.0, Nl	1
	16	21851	(000000–)	Spacer, Plstc, Ny	1
	17	09740	(000000–)	Screw, Hex, M8 X 1.25 X 20, Ss	3
	18	1017218	(000000–)	Washer, Flat, 0.32b 1.00d .12, Ss	11
▽	19	1022105	(000000–006519)	Seat, Suspension, W/1 Arm And Belt	1
▲		1066893	(000000–006519)	Seatbelt, Retractable [Deluxe Seat]	1
▲		1048955	(000000–006519)	Switch, Seat, No [Delta 6440–04]	1
▲	20	1072815	(000000–006519)	Armrest, Rh	1
	21	32983	(000000–)	Nut, Hex, Lock, .31–18, Nl	4
	22	364749	(000000–)	Washer, Flat, 0.41b 1.25d .12, Pye	1
	23	32492	(000000–)	Washer, Flat, 0.38 Std	2
	24	08085	(000000–)	Pin, Cotter, Hair, 0.31d .058 Wir	1
	25	1022005	(000000–)	Cover, Lower	1
	26	1031665	(000000–)	Screw, Pan, M8 X 1.25 X 25, Blk	2
	27	39349	(000000–)	Washer, Flat, 0.31 Sae	2
	28	1018776	(000000–)	Shroud, Seat	1
	29	1026825	(000000–)	Bracket, Latch, Shrd, Seat	1
	30	09200	(000000–)	Screw, Pan, M5 X 0.8 X 12, Ss	8
	31	1024464	(000000–)	Hinge Wldt, Shrd, Rh	2
	32	16931	(000000–)	Screw, Hex, M8 X 1.25 X 20, 8.8	8
	33	1024425	(000000–)	Hinge Wldt, Shrd, Rh	2
	34	1025916	(000000–)	Grill, Side	1
	35	41178	(000000–)	Washer, Flat, 0.25 Fendr	6
	36	1020487	(000000–)	Bracket, Seat, Adj	1
	37	1030588	(000000–)	Seal, Afmkt, Bulb, 90, 0.75d F/11ga 02ft	1
	38	1031206	(000000–)	Seal, Afmkt, Bulb, 90, 0.50d, 02ft	1
	39	58494	(001299–)	Stud, Ball, .39d .31–16, Gasspring	2
	40	368391	(001299–)	Gasspring, 180lb, 03.0strk	1
	41	01760	(001299–)	Nut, Hex, Lock, .31–18, Nl, Thin	2
	42	76888	(002886–)	Plug, Hole, Rnd, 1.25H .03–.12, Blk Nyl	1
	43	32491	(000000–)	Washer, Flat, 0.31, Std	4
	44	19066	(000000–)	Washer, Flat, 0.25b 0.56d .05, Pl, 10	6
	45	1072456	(006520–)	Seat (See Breakdowns)	1

Fig. 8 – Steering Group

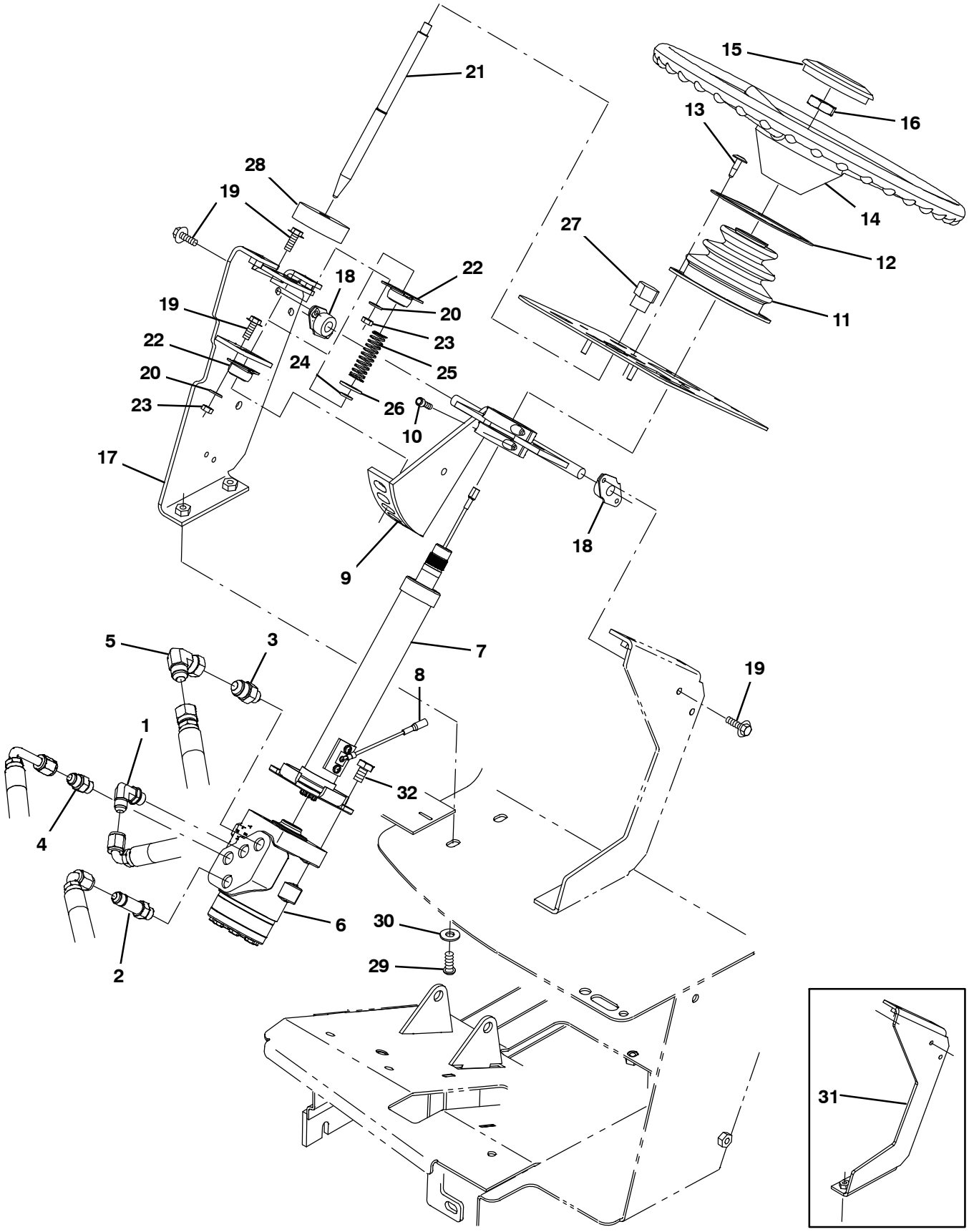

354412 – M20

Fig. 8 – Steering Group

	Ref.	Part No.	Serial Number	Description	Qty.
	1	56820	(000000–)	Fitting, Hyd, E90, Jm06/Om06	1
	2	59577	(000000–)	Fitting, Hyd, Str, Jm06/Om06, L	1
	3	56835	(000000–)	Fitting, Hyd, Str, Jm08/Om06	1
	4	56690	(000000–)	Fitting, Hyd, Str, Jm06/Om06	1
	5	17980	(000000–)	Fitting, Hyd, E90, Jf08/Jm08	1
	6	1024260	(000000–)	Steer–Control, Hyd#05, 06.1 2030 (See Breakdowns)	1
▽	7	1021265	(000000–)	Column, Steering, 09.9L 0.86D 36Tooth	1
▲	8	388153	(000000–)	Contact Kit, W/ Brush [En]	4
▽	9	73027	(000000–)	Bracket Wldt, Steering, Tilt	1
▲	10	01681	(000000–)	Screw, Soc, .25–20 X 0.75, Al	4
	11	70622	(000000–)	Boot, Bellows, 3.1l 4.4w 2.8h 1hole, Neo	1
	12	70623	(000000–)	Retainer, Boot, Steering Column	1
	13	72970	(000000–)	Rivet, Plstc, .250d X 0.898	4
	14	1058996	(000000–)	Wheel, Steering, 14.3d 0.81b 36tooth	1
	15	1024478	(000000–)	Button, Cntrl, Horn	1
	16	56185	(000000–)	Nut, Hex, Jam, M20 X 1.5	1
	17	1024695	(000000–)	Bracket Wldt, Tilt, Rh	1
	18	70709	(000000–)	Bearing, Flng, 2–Hole, 0.50b	2
	19	1040467	(000000–)	Screw, Hex, M6 X 1.00 X 20, 9.8, Sems	8
	20	32483	(000000–)	Washer, Flat, 0.25 Sae	4
	21	1023926	(000000–)	Pin, Locking, Steering, Tilt	1
	22	47585	(000000–)	Bearing, Flng, 2hole, 0.50b [Nyl]	2
	23	08708	(000000–)	Nut, Hex, Lock, M6 X 1.0, Nl	4
	24	70717	(000000–)	Ring, Retaining, Ext, 0.50d, Hd	1
	25	22290	(000000–)	Spring, Cmpr, 18.8d, 1.6w, 57.1l	1
	26	32486	(000000–)	Washer, Flat, 0.50 Sae	1
	27	04706	(000000–)	Knob, Tee, 2.5x1.0 1.1l 0.38–16 Plstc	1
	28	75968	(000000–)	Insulation, Acstc, Rnd, 0.8, 02.5d 0.5h	1
	29	1031665	(000000–)	Screw, Pan, M8 X 1.25 X 25, Blk	2
	30	32491	(000000–)	Washer, Flat, 0.31, Std	2
	31	1024157	(000000–001052)	Bracket, Tilt, Lh	1
	32	06960	(000000–)	Screw, Hex, M10 X 1.5 X 16, 8.8	4

Fig. 9 – Front Cover Group

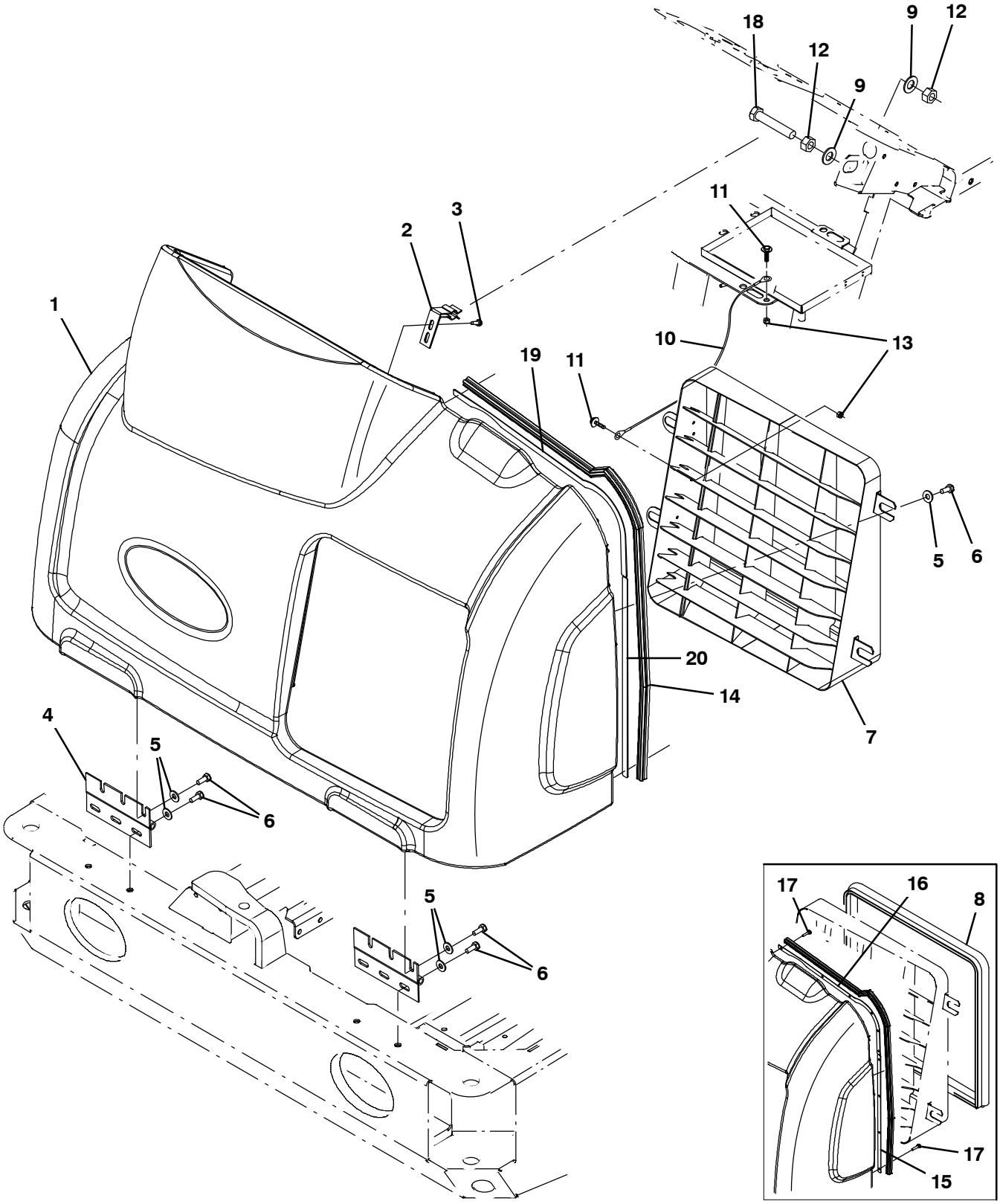

354413

Fig. 9 – Front Cover Group

Ref.	Part No.	Serial Number	Description	Qty.
1	1022069	(000000–)	Shroud, Front, Trimmed	1
2	1008916	(000000–)	Bracket Wldt, Latch	1
3	06942	(000000–)	Screw, Hex, M6 X 1.0 X 16, 8.8	2
4	71941	(000000–)	Hinge, .38pin .11 3.5w 06.0l 6/0.38sl	2
5	32491	(000000–)	Washer, Flat, 0.31, Std	14
6	16931	(000000–)	Screw, Hex, M8 X 1.25 X 20, 8.8	14
7	1035068	(000000–)	Grill Wldt, Front	1
8	1031557	(000000–001277)	Seal, Afmkt, Bulb, Str, 1.0d F/11ga 08ft	1
9	15331	(000000–)	Washer, Flat, 0.62 Sae	2
10	391368	(000000–)	Cable, Glv .09d 016.5l .38eye /.38eye	1
11	1040467	(000000–)	Screw, Hex, M6 X 1.00 X 20, 9.8, Sems	2
12	07782	(000000–)	Nut, Hex, Std, M16 X 2.0	2
13	08708	(000000–)	Nut, Hex, Lock, M6 X 1.0, Nl	2
14	1049919	(000000–)	Seal, Sponge, 0.88 1.00W 43.0L	1
15	1029652	(000000–002064)	Plate, Mtg, Seal	1
16	1029545	(000000–002064)	Plate, Mtg, Seal	1
17	20394	(000000–002064)	Screw, Hex, #10–16 X 0.62, Fmg, [Ab]	10
18	06988	(000000–)	Screw, Hex, M16 X 2.0 X 90, 8.8	1
19	1037970	(002065–)	Strip Mtg, Seal	1
20	1037971	(002065–)	Strip Mtg, Seal	1

Fig. 10 – Engine Cover Group

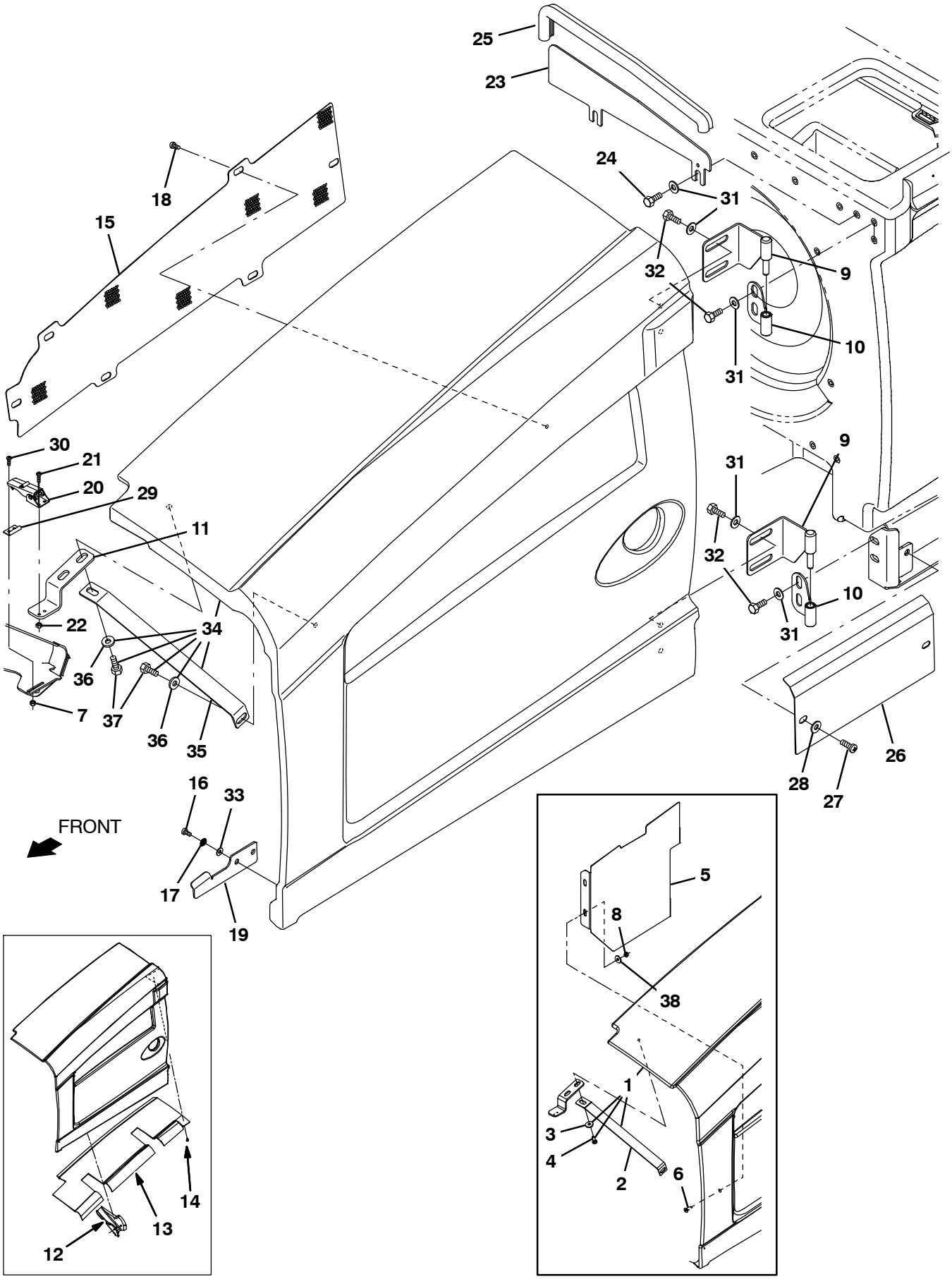

354414–G/LP

Fig. 10 – Engine Cover Group

	Ref.	Part No.	Serial Number	Description	Qty.
▽	1	1033156	(000000–005999)	Shroud Assy, Eng	1
▲	2	1026628	(000000–005999)	Angle, Brace, Shrd	1
▲	3	1017218	(000000–005999)	Washer, Flat, 0.32b 1.00d .12, Ss	2
▲	4	16931	(000000–005999)	Screw, Hex, M8 X 1.25 X 20, 8.8	2
	5	1022004	(000000–005999)	Bracket, Shield, Heat	1
	6	74077	(000000–005999)	Screw, Flt, M8 X 1.25 X 25	4
	7	33932	(000000–)	Nut, Hex, Lock, M4 X 0.7, Nl, Ss	2
	8	08709	(000000–005999)	Nut, Hex, Lock, M8 X 1.25, Nl	4
	9	1024500	(000000–)	Hinge Wldt, Shrd, Lh	2
	10	1025196	(000000–)	Hinge Wldt, Shrd, Lh	2
	11	1020186	(000000–)	Bracket, Latch, Cover	1
	12	1028516	(000000–001327)	Insulation, Shrd, Eng, Gusset	1
	13	1026665	(000000–001327)	Insulation, Flame–Retardant, 0.5	1
	14	21168	(000000–001327)	Clip, .250h, Plstc [Pine–Tree]	14
	15	1026726	(000000–)	Grill, Eng	1
	16	09200	(000000–)	Screw, Pan, M5 X 0.8 X 12, Ss	2
	17	19066	(000000–)	Washer, Flat, #10	2
	18	222267	(000000–)	Screw, Pan, Phl, 06–20 X 0.50, Fmg/Ab	6
	19	1028412	(000000–)	Bracket, Guide, Shrd	1
	20	384418	(000000–)	Latch, Door [Southco 91–562–07]	1
	21	06927	(000000–)	Screw, Pan, M4 X 0.7 X 16, 4.8	2
	22	02850	(000000–)	Nut, Hex, Lock, M4 X 0.7, Nl	2
	23	1025806	(000000–)	Plate, Seal, Sound	1
	24	09740	(000000–)	Screw, Hex, M8 X 1.25 X 20, Ss	2
	25	1030588	(000000–)	Seal, Afmkt, Bulb, 90, 0.75d F/11ga 02ft	2
	26	1022005	(000000–)	Cover, Lower	1
	27	1031665	(000000–)	Screw, Pan, M8 X 1.25 X 25, Blk	2
	28	39349	(000000–)	Washer, Flat, 0.31 Sae	2
	29	384419	(000000–)	Bracket, Latch, Keeper [Southco]	1
	30	24265	(000000–)	Screw, Pan, M4 X 0.7 X 16, Ss	2
	31	1017218	(000000–)	Washer, Flat, 0.32b 1.00d .12, Ss	11
	32	16931	(000000–)	Screw, Hex, M8 X 1.25 X 20, 8.8	7
	33	41139	(000000–)	Washer, Lock, Int–Ext, 10	2
▽	34	1071439	(006000–)	Shroud Assy, Eng	1
▲	35	1026628	(006000–)	Angle, Brace, Shrd	1
▲	36	1017218	(006000–)	Washer, Flat, 0.32b 1.00d .12, Ss	2
▲	37	16931	(006000–)	Screw, Hex, M8 X 1.25 X 20, 8.8	2
	38	1017218	(000000–005999)	Washer, Flat, 0.32b 1.00d .12, Ss	4

Fig. 11 – GM Engine and Mount Group (000000– 005999)

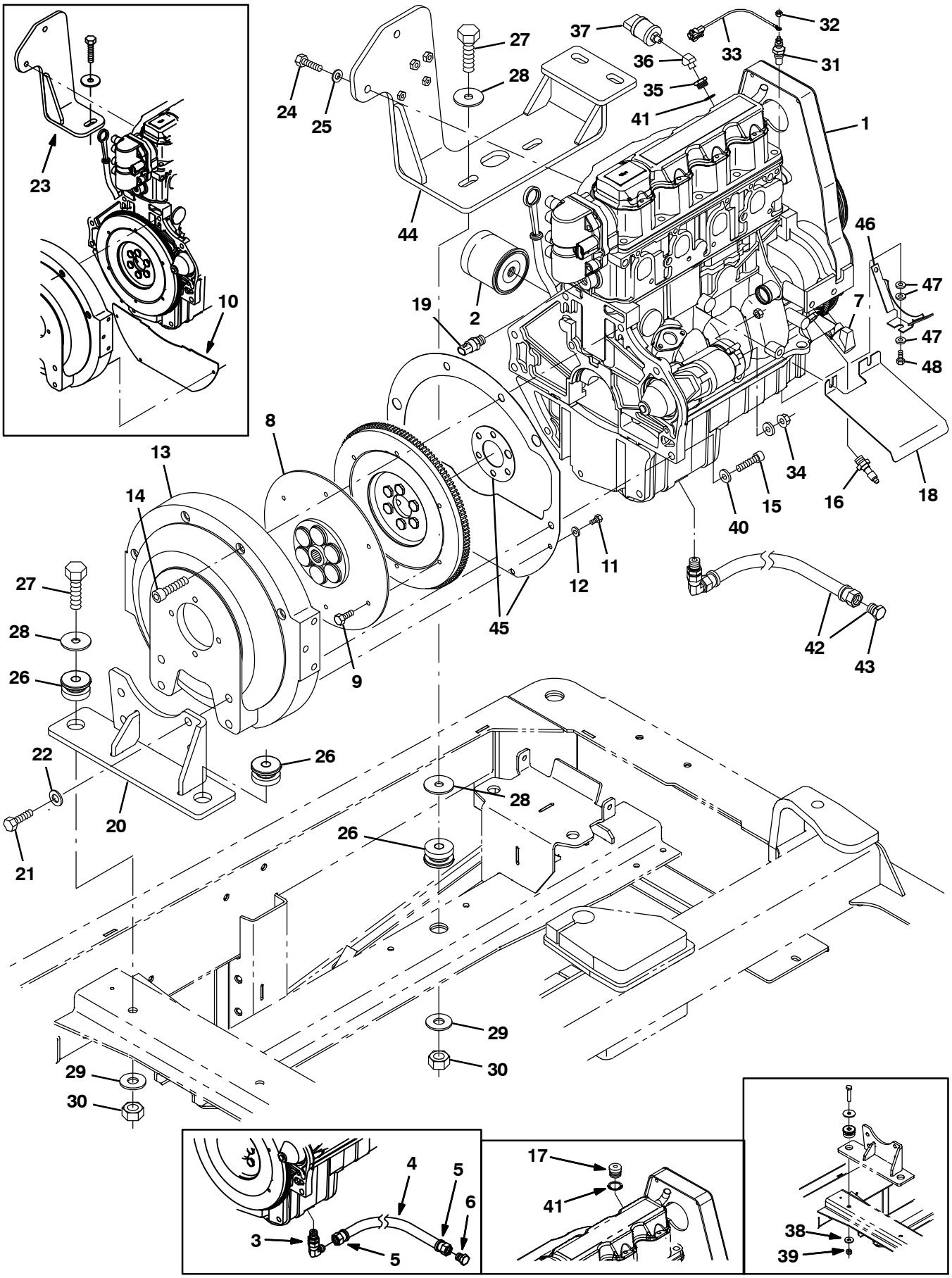

354415

Fig. 11 – GM Engine and Mount Group (000000–005999)

	Ref.	Part No.	Serial Number	Description	Qty.
▽	1	372862	(000000–005999)	Engine [Long Block Gm 1.6l] (See Engine Breakdown)	1
▲	2	371972	(000000–005999)	Element, Fltr, Oil, Eng, Spin–On (GM)	1
	3	372541	(000000–001999)	Fitting, E90, M14 X .56	1
	4	371855	(000000–001999)	Hose, Hyd, 26.0l	1
	5	371876	(000000–001999)	Fitting, End, Hose	2
	6	371890	(000000–001999)	Fitting, Pipe, Plug	1
	7	372002	(000000–005999)	Sensor, Position, Cshft	1
	8	371866	(000000–005999)	Coupling, Drive, 13t	1
	9	9008395	(000000–005999)	Screw, Hex, M07–1.00 X 20.0, 8.8	6
	10	371868	(000000–003122)	Cover, Hsng, Flywheel (Replaced By 9006895)	1
	11	19315	(000000–005999)	Screw, Hex, .25–20 X 0.50, 5	4
	12	32490	(000000–005999)	Washer, Flat, 0.25 Std	4
	13	371869	(000000–005999)	Housing, Pump	1
	14	371870	(000000–005999)	Screw, Soc, M12 X 1.75 X 55, 10.9	4
	15	10832	(000000–005999)	Screw, Soc, .38–16 X 1.50, Al	2
	16	371996	(000000–003122)	Switch, Indicator, Oil Press	1
	16	9008197	(003123–005999)	Switch, Indicator, Oil Press [2010]	1
	17	371860	(000000–001999)	Fitting, Pipe, Plug, Metric, M18,Soc	1
	18	372556	(000000–005999)	Shield, Starter [1.6l]	1
	19	372953	(000000–005999)	Sensor, Temp, Coolant	1
	20	1023288	(000000–005999)	Bracket Wldt, Mtg, Eng, Back, Gas/Lpg	1
	21	39810	(000000–005999)	Screw, Hex, .50–13 X 1.25, 5	4
	22	32486	(000000–005999)	Washer, Flat, 0.50 Sae	4
	23	1011353	(000000–003038)	Mount Wldt, Eng, Gas/Lpg	1
	24	39283	(000000–005999)	Screw, Hex, M10 X 1.5 X 25, 8.8	2
	25	32485	(000000–005999)	Washer, Flat, 0.38 Sae	2
	26	51176	(000000–005999)	Isolator, Vib, .50d	3
	27	06972	(000000–005999)	Screw, Hex, M12 X 1.75 X 60, 8.8	3
	28	04414	(000000–005999)	Washer, Flat, 0.53b 1.88d .12, Stl, Pl	4
	29	32493	(000000–005999)	Washer, Flat, 0.50 Std	3
	30	08711	(000000–005999)	Nut, Hex, Lock, M12 X 1.75,Nl	3
	31	1042028	(000000–005999)	Sensor, Temp, Water [Rework For 1.6GM]	1
	32	50335	(000000–005999)	Nut, Hex, Std, M5 X 0.8, 8	1
	33	1030073	(000000–005999)	Wire, 16ga 09.6l Brown Mp280/ #10ring	1
	34	41361	(000000–005999)	Nut, Hex, Std, M8 X 1.25, Brs	1
	35	1031439	(002000–005999)	Fitting, Pipe, Bshg, M18 X 1.5	1
	36	24976	(002000–005999)	Fitting, Brs, E45, Pf02/Pm02	1
	37	1055106	(002000–005999)	Switch, Press, 0006psi Dpdt	1
	38	32493	(000000–001337)	Washer, Flat, 0.50, Std	2
	39	08711	(000000–001337)	Nut, Hex, Lock, M12 X 1.75,Nl	2
	40	371877	(000000–005999)	Washer, Flat, 0.38, Hardened	2
	41	385029	(000000–005999)	Gasket, Plug, Relief Valve,Oil Press	1
▽	42	9006634	(002000–005999)	Hose, Drain, Eng Oil	1
▲	43	9006635	(002000–005999)	Fitting, Plug	1
	44	1046022	(003039–005999)	Bracket Wldt, Mtg, Eng	1
	45	9006895	(003123–005999)	Plate Kit, Repair	1
	46	1056566	(003086–005999)	Plate, Guard, Belt [Gm 1.6l]	1
	47	32490	(003086–005999)	Washer, Flat, 0.25, Std	3
	48	06943	(003086–005999)	Screw, Hex, M6 X 1.00 X 20, 8.8	1

Fig. 12 – GM Engine EFI Group, Gasoline (000000–001999)

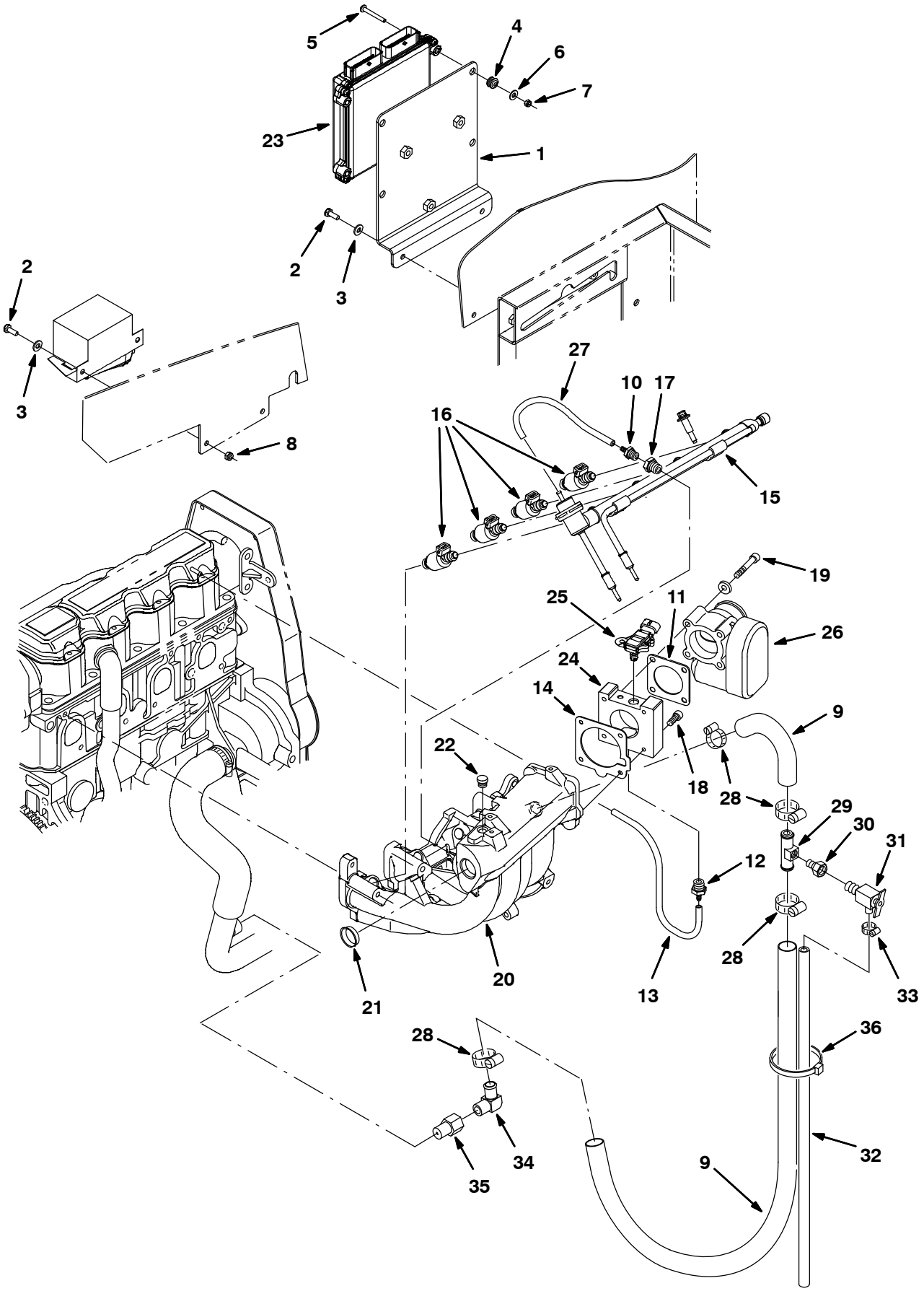

354416

Fig. 12 – GM Engine EFI Group, Gasoline (000000–001999)

	Ref.	Part No.	Serial Number	Description	Qty.
	1	1018939	(000000–001999)	Bracket, Mtg [Ecu]	1
	2	06942	(000000–001999)	Screw, Hex, M6 X 1.0 X 16, 8.8	4
	3	32483	(000000–001999)	Washer, Flat, 0.25 Sae	4
	4	46314	(000000–001999)	Grommet, Rbr, 0.20id, F/0.4h, .12 Matl	4
	5	06938	(000000–001999)	Screw, Pan, M5 X 0.8 X 40, 4.8	4
	6	01683	(000000–001999)	Washer, Flat, #10, Ss	8
	7	06549	(000000–001999)	Nut, Hex, Lock, M5 X 0.8, Nl	4
	8	08708	(000000–001999)	Nut, Hex, Lock, M6 X 1.0, Nl	2
	9	1022364	(000000–001999)	Hose, Heater	1
	10	372542	(000000–001999)	Fitting, Str, .19brb X .12mpt	1
	11	372545	(000000–001999)	Gasket, Body, Throttle [1.6l]	1
	12	372543	(000000–001999)	Fitting, Vacuum [M16–15–6h]	1
	13	372489	(000000–001999)	Hose, 9.5mm X 450mm [Pcv]	1
	14	372544	(000000–001999)	Gasket, Manifold, Intake	1
▽	15	372566	(000000–001999)	Rail, Injector, Gas, W/ Press Reg	1
▲	16	372563	(000000–001999)	Injector Kit, Fuel, Gas	4
	17	372537	(000000–001999)	Bushing, M06–1.50 X .25–27npt	1
	18	06532	(000000–001999)	Screw, Soc, M6 X 1.0 X 25, 12.9	4
	19	07255	(000000–001999)	Screw, Soc, M6 X 1.0 X 45, 12.9	4
	20	372547	(000000–001999)	Manifold, Intake [1.6l]	1
	21	372549	(000000–001999)	Plug, Manifold, Intake	1
	22	372550	(000000–001999)	Plug, Port, Sensor [Map]	1
	23	372858	(000000–001999)	Module, Ecu, Gas [Gm 1.6l]	1
	24	372534	(000000–001999)	Adapter, Intake, Throttle Body	1
	25	372493	(000000–001999)	Sensor [Tmap]	1
	26	384974	(000000–001999)	Housing, Throttle, 40mm [Bosch]	1
	27	372546	(000000–001999)	Hose, Fuel, .19	1
	28	63810	(000000–001999)	Clamp, Hose, Wormdrive, 0.56–1.06d, .56w	4
	29	83578	(000000–001999)	Tube, Air Bleed, .62d 2.2l .12npt Alm	1
	30	1015930	(000000–001999)	Fitting, Brs, Str, Pf04/Pm02	1
	31	51305	(000000–001999)	Fitting, Draincock, E90, .25npt	1
	32	73471	(000000–001999)	Hose, Pvc, Clr, 0.38id 0.56od 22.00l	1
	33	43844	(000000–001999)	Clamp, Hose, Wormdrive, 0.25–0.62d, .31w	1
	34	51839	(000000–001999)	Fitting, Brs, E90, Em10/Pm06	1
	35	1015547	(000000–001999)	Fitting, Adapter, Orifice, Pf06/Pm06	1
	36	49266	(000000–001999)	Tie, Cable, Nyl, 07.3l .19w 1.8 Max D	1

Fig. 13 – GM Engine EFI Group, Gasoline (002000–003122)

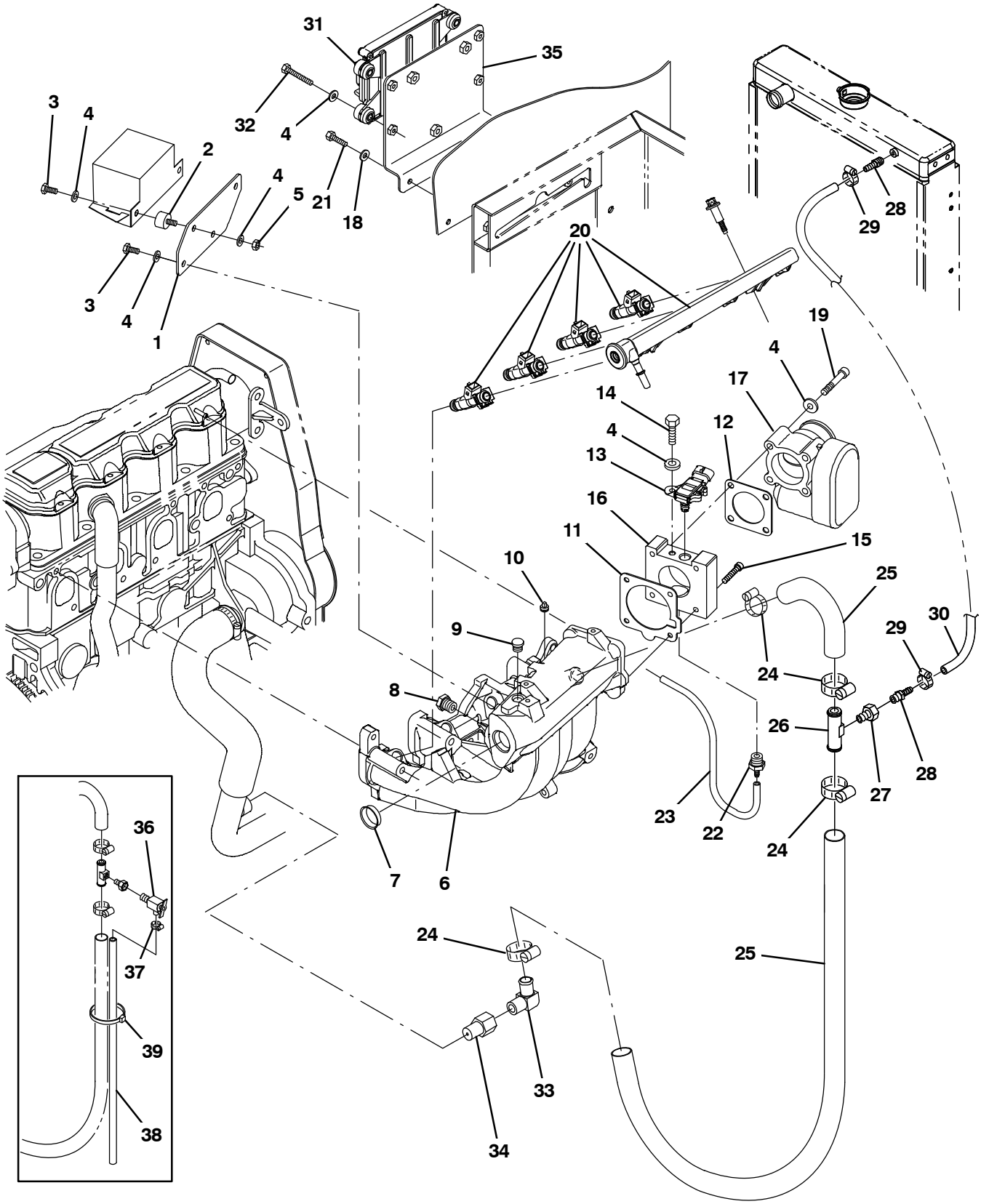

354416

Fig. 13 – GM Engine EFI Group, Gasoline (002000–003122)

	Ref.	Part No.	Serial Number	Description	Qty.
	1	1031312	(002000–003122)	Plate, Mtg, Relay	1
	2	372470	(002000–003122)	Isolator, Box, Relay	2
	3	19315	(002000–003122)	Screw, Hex, .25–20 X 0.50, G5	4
	4	32490	(002000–003122)	Washer, Flat, 0.25, Std	13
	5	19312	(002000–003122)	Nut, Hex, Std, .25–20	2
	6	372547	(002000–003122)	Manifold, Intake [1.6l]	1
	7	372549	(002000–003122)	Plug, Manifold, Intake	1
	8	384995	(002000–003122)	Fitting, Plug, M16, Intake Manifold	1
	9	372550	(002000–003122)	Plug, Port, Sensor [Map]	1
	10	372548	(002000–003122)	Plug, .12npt, Ss	1
▽		9003390	(002000–003122)	Gasket Kit, Repair, Gas [Gm1.6l 2007]	1
▲	11	372544	(002000–003122)	Gasket, Manifold, Intake	1
▲	12	372545	(002000–003122)	Gasket, Body, Throttle [1.6l]	1
	13	372493	(002000–003122)	Sensor [T Map]	1
	14	19317	(002000–003122)	Screw, Hex, .25–20 X 0.75, G5	1
	15	06532	(002000–003122)	Screw, Soc, M6 X 1.00 X 25, 12.9	4
	16	372534	(002000–003122)	Adapter, Intake, Throttle Body	1
	17	384974	(002000–003122)	Housing, Throttle, 40mm [Bosch]	1
	18	32483	(002000–003122)	Washer, Flat, 0.25, Sae	2
	19	07255	(002000–003122)	Screw, Soc, M6 X 1.00 X 45, 12.9	4
	20	384992	(002000–003122)	Rail, Injector, Fuel, Plstc	1
	21	06942	(002000–003122)	Screw, Hex, M6 X 1.00 X 16, 8.8	2
	22	372543	(002000–003122)	Fitting, Vacuum [M16–15–6h]	1
	23	384972	(002000–003122)	Hose, Vacuum, 0.22id X 15.0l	1
	24	63810	(002000–003122)	Clamp, Hose, Wormdrive, 0.56–1.06d, .56w	4
	25	1022364	(002000–003122)	Hose, Heater	1
	26	83578	(002000–003122)	Tube, Bleed, Air, .62od 2.2l .12npt, Alm	1
	27	1015930	(002000–003122)	Fitting, Brs, Str, Pf04/Pm02	2
	28	150516	(002493–003122)	Fitting, Brs, Str, Bm06/Pm05	2
	29	54333	(002493–003122)	Clamp, Hose, Wormdrive, 0.31–0.88d, .31w	2
	30	1043481	(002493–003122)	Hose, Heater, 0.38ID	1
	31	1028711	(002000–003122)	Module, Ecu, Gas [Gm1.6l 2700]	1
	32	06946	(002000–003122)	Screw, Hex, M6 X 1.00 X 35, 8.8	4
	33	51839	(002000–003122)	Fitting, Brs, E90, Em10/Pm06	1
	34	1015547	(002000–003122)	Fitting, Adapter, Orifice, Pf06/Pm06	1
	35	1029082	(002000–003122)	Bracket, Mtg, Ecu [M20/T20 2007]	1
	36	51305	(002000–002492)	Fitting, Draincock, E90, .25npt	1
	37	43844	(002000–002492)	Clamp, Hose, Wormdrive, 0.25–0.62d, .31w	1
	38	73471	(002000–002492)	Hose, Pvc, Clr, 0.38id 0.56od 022.0l	1
	39	49266	(002000–002492)	Tie, Cable, Nyl, 07.3l .19w 1.8 Max D	1

Fig. 14 – GM Engine EFI Group, Gasoline (003123–005999)

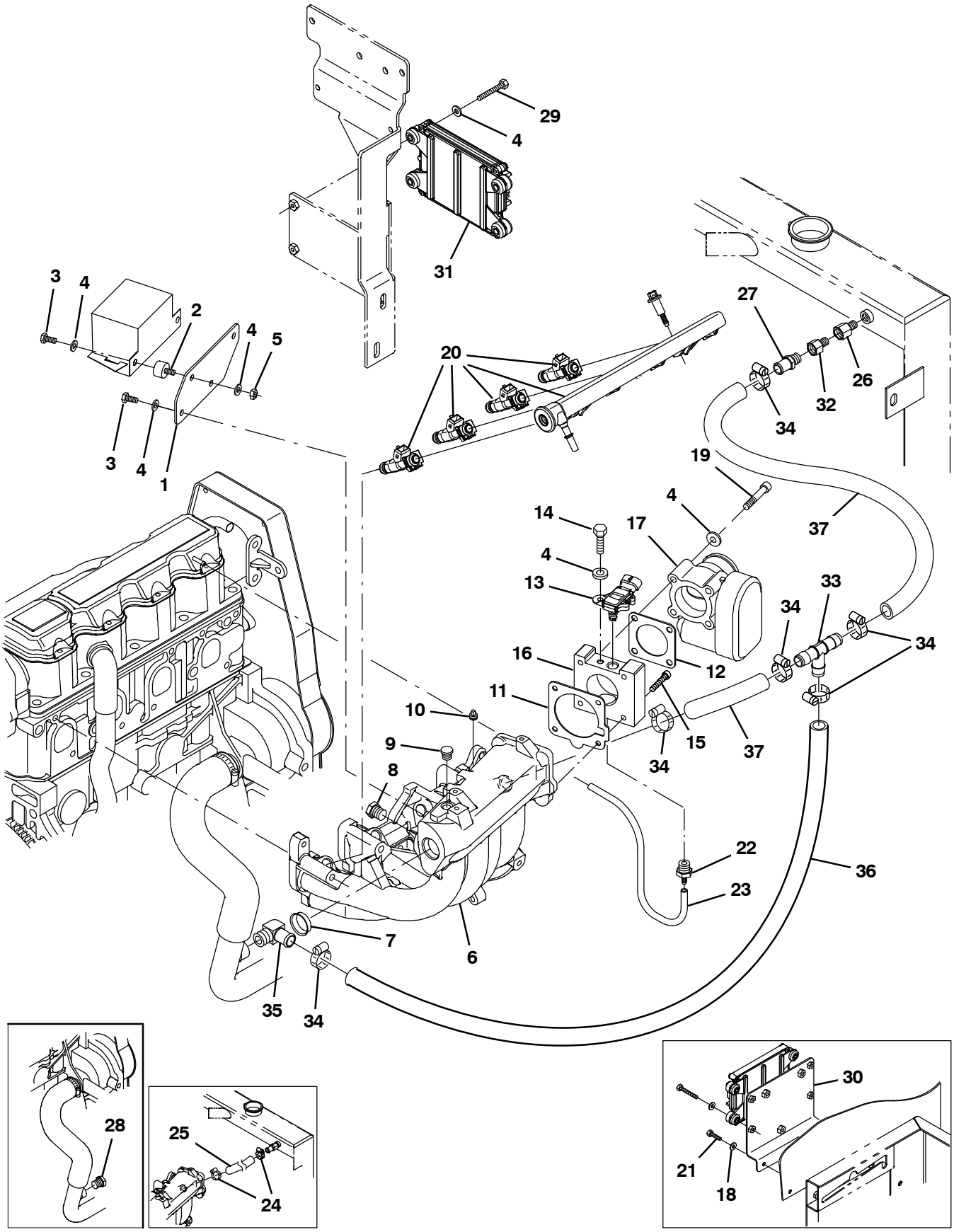

354416

Fig. 14 – GM Engine EFI Group, Gasoline (003123–005999)

	Ref.	Part No.	Serial Number	Description	Qty.
	1	1031312	(003123–005999)	Plate, Mtg, Relay	1
	2	372470	(003123–005999)	Isolator, Box, Relay	2
	3	19315	(003123–005999)	Screw, Hex, .25–20 X 0.50, G5	4
	4	32490	(003123–005999)	Washer, Flat, 0.25, Std	13
	5	19312	(003123–005999)	Nut, Hex, Std, .25–20	2
	6	372547	(003123–005999)	Manifold, Intake [1.6l]	1
	7	372549	(003123–005999)	Plug, Manifold, Intake	1
	8	384995	(003123–005999)	Fitting, Plug, M16, Intake Manifold	1
	9	372550	(003123–005999)	Plug, Port, Sensor [Map]	1
	10	372548	(003123–005999)	Plug, .12npt, Ss	1
▽		9003390	(003123–005999)	Gasket Kit, Repair, Gas [Gm1.6l 2007]	1
▲	11	372544	(003123–005999)	Gasket, Manifold, Intake	1
▲	12	372545	(003123–005999)	Gasket, Body, Throttle [1.6l]	1
	13	372493	(003123–005999)	Sensor [T Map]	1
	14	19317	(003123–005999)	Screw, Hex, .25–20 X 0.75, G5	1
	15	06532	(003123–005999)	Screw, Soc, M6 X 1.00 X 25, 12.9	4
	16	9006619	(003123–005999)	Adapter	1
	17	384974	(003123–005999)	Housing, Throttle, 40mm [Bosch]	1
	18	32483	(003123–003170)	Washer, Flat, 0.25, Sae	2
	19	07255	(003123–005999)	Screw, Soc, M6 X 1.00 X 45, 12.9	4
	20	384992	(003123–005999)	Rail, Injector, Fuel, Plstc	1
	21	06942	(003123–003170)	Screw, Hex, M6 X 1.00 X 16, 8.8	2
	22	372543	(003123–005999)	Fitting, Vacuum [M16–15–6h]	1
	23	384972	(003123–005999)	Hose, Vacuum, 0.22id X 15.0l	1
	24	63810	(003123–003268)	Clamp, Hose, Wormdrive, 0.56–1.06d, .56w	2
	25	61869	(003123–003268)	Hose, Heater, 0.62id, 024.0l	1
	26	1042772	(003123–005999)	Fitting, Brs, Str, Pf06/Pm04	1
	27	27767	(003123–005999)	Fitting, Brs, Str, Em10/Pm06	1
	28	762282	(003123–003268)	Fitting, Hyd, Plug, Pm06	1
	29	06946	(003123–005999)	Screw, Hex, M6 X 1.00 X 35, 8.8	4
	30	1029082	(003123–003170)	Bracket, Mtg, Ecu [M20/T20 2007]	1
	31	1056232	(003123–005999)	Module, Ecu, Gas [Gm1.6l 2010]	1
	32	1015547	(003123–005999)	Fitting, Adapter, Orifice, Pf06/Pm06	1
	33	1062116	(003269–005999)	Fitting, Plstc, Tee, Bm10/Bm10/Bm10	1
	34	63810	(003269–005999)	Clamp, Hose, Wormdrive, 0.56–1.06d, .56w	7
	35	51839	(003269–005999)	Fitting, Brs, E90, Em10/Pm06	1
	36	1016560	(003269–005999)	Hose, Afmkt, Rbr, Heater, 0.62id, 02ft	1
	37	1015897	(003269–005999)	Hose, Radiator, Mold, .75Id X .62Id (Cut in two)	1

Fig. 15 – GM Engine EFI Group, LPG (000000–001999)

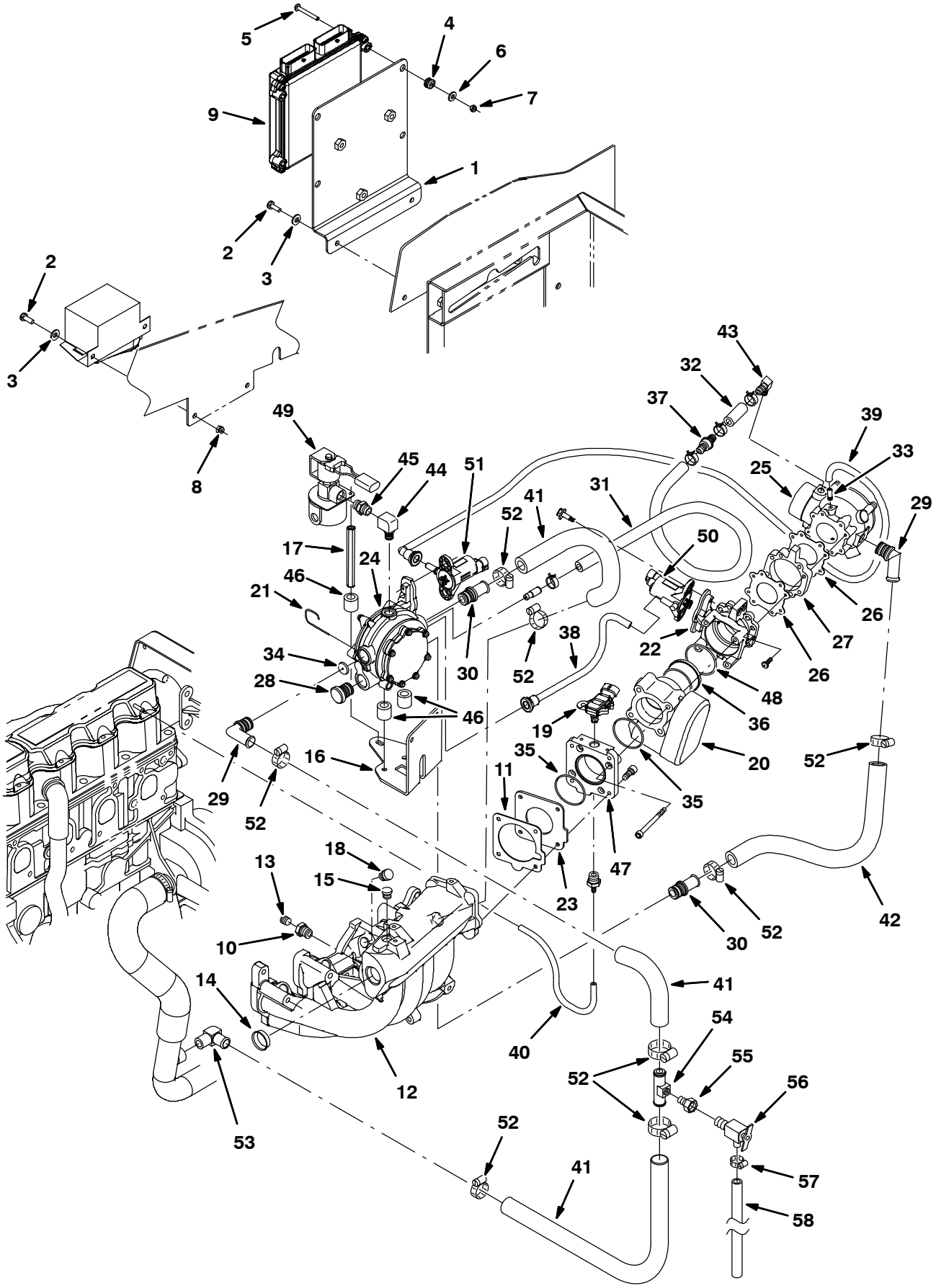

354417

Fig. 15 – GM Engine EFI Group, LPG (000000–001999)

	Ref.	Part No.	Serial Number	Description	Qty.
	1	1018939	(000000–001999)	Bracket, Mtg [Ecu]	1
	2	06942	(000000–001999)	Screw, Hex, M6 X 1.0 X 16, 8.8	4
	3	32483	(000000–001999)	Washer, Flat, 0.25 Sae	4
	4	46314	(000000–001999)	Grommet, Rbr, 0.20id, F/0.4h, .12 Matl	4
	5	06938	(000000–001999)	Screw, Pan, M5 X 0.8 X 40, 4.8	4
	6	01683	(000000–001999)	Washer, Flat, #10, Ss	8
	7	06549	(000000–001999)	Nut, Hex, Lock, M5 X 0.8, Nl	4
	8	08708	(000000–001999)	Nut, Hex, Lock, M6 X 1.0, Nl	2
	9	372857	(000000–001999)	Module, Ecu, Lpg [Gm 1.6l]	1
	10	372537	(000000–001999)	Bushing, M06–1.50 X .25–27npt	1
	11	372544	(000000–001999)	Gasket, Manifold, Intake	1
	12	372547	(000000–001999)	Manifold, Intake [1.6l]	1
	13	372548	(000000–001999)	Plug, .12npt, Ss	1
	14	372549	(000000–001999)	Plug, Manifold, Intake	1
	15	372550	(000000–001999)	Plug, Port, Sensor [Map]	1
	16	372576	(000000–001999)	Bracket, Reg [1.6l]	1
	17	372577	(000000–001999)	Spacer, Sppt, Fltr Lock Off	1
	18	372579	(000000–001999)	Plug, Hole, Injector	4
	19	372493	(000000–001999)	Sensor [Tmap]	1
	20	372482	(000000–001999)	Housing, Throttle, 40mm [Bosch]	1
	21	372523	(000000–001999)	Pin, Retainer	5
	22	372580	(000000–001999)	Adapter, Valve, Fuel Trim	1
	23	372582	(000000–001999)	Adapter, Plate	1
	24	372500	(000000–001999)	Regulator, Lpg	1
	25	372898	(000000–001999)	Mixer, Lpg [Gm 1.6l]	1
	26	372608	(000000–001999)	Gasket	2
	27	372612	(000000–001999)	Adapter, Throttle Body	1
	28	372515	(000000–001999)	Fitting, Cap	1
	29	372512	(000000–001999)	Fitting, E70	2
	30	372514	(000000–001999)	Fitting, Str	2
	31	372506	(000000–001999)	Hose, Balancing, Press, 680mm	1
	32	372507	(000000–001999)	Hose, Balancing, Press, 045mm	1
	33	372511	(000000–001999)	Fitting, Hose, Vacuum, .25	1
	34	372517	(000000–001999)	Restrictor, Jet, Coolant	1
	35	372484	(000000–001999)	Seal, Org	1
	36	372498	(000000–001999)	Sleeve, Throttle, Plstc [Bosch]	1
	37	372569	(000000–001999)	Valve, Check	1
	38	372609	(000000–001999)	Hose, 170mm [Ftv–Ptv]	1
	39	372605	(000000–001999)	Hose, Valve, Press Trim, 350mm	1
	40	372607	(000000–001999)	Hose, 9.5mm X 290mm [Pcv]	1
	41	372528	(000000–001999)	Hose, Mold, .62 To .75	1
	42	372606	(000000–001999)	Hose, 355mm [Fl–Vrp]	1
	43	372510	(000000–001999)	Fitting, E90	1
	44	372611	(000000–001999)	Fitting, Str, E90, .25npt	1
	45	372610	(000000–001999)	Fitting, Nipple, .25npt, Brs	1
	46	372518	(000000–001999)	Isolator, Mtg, Vaporizer, Rbr	3
	47	372558	(000000–001999)	Adapter [1.6]	1
	48	372613	(000000–001999)	Seal, Org, Throttle Body	1
▽	49	372503	(000000–001999)	Valve, Fuelock, Lpg, Wire Connector	1
▲		372615	(000000–001999)	Filter Kit, Fuelock, Lpg	1

Fig. 15 – GM Engine EFI Group, LPG (000000–001999)

Ref.	Part No.	Serial Number	Description	Qty.
50	372501	(000000–001999)	Valve, Trim, Fuel, Normal Flow	1
51	372497	(000000–001999)	Valve, Body, Throttle, Lpg	1
52	63810	(000000–001999)	Clamp, Hose, Wormdrive, 0.56–1.06d, .56w	9
53	51839	(000000–001999)	Fitting, Brs, E90, Em10/Pm06	1
54	83578	(000000–001999)	Tube, Air Bleed, .62d 2.2l .12npt Alm	1
55	1015930	(000000–001999)	Fitting, Brs, Str, Pf04/Pm02	1
56	51305	(000000–001999)	Fitting, Draincock, E90, .25npt	1
57	43844	(000000–001999)	Clamp, Hose, Wormdrive, 0.25–0.62d, .31w	1
58	73471	(000000–001999)	Hose, Pvc, Clr, 0.38id 0.56od 22.00l	1

Fig. 16 – GM Engine EFI Group, LPG (002000–005999)

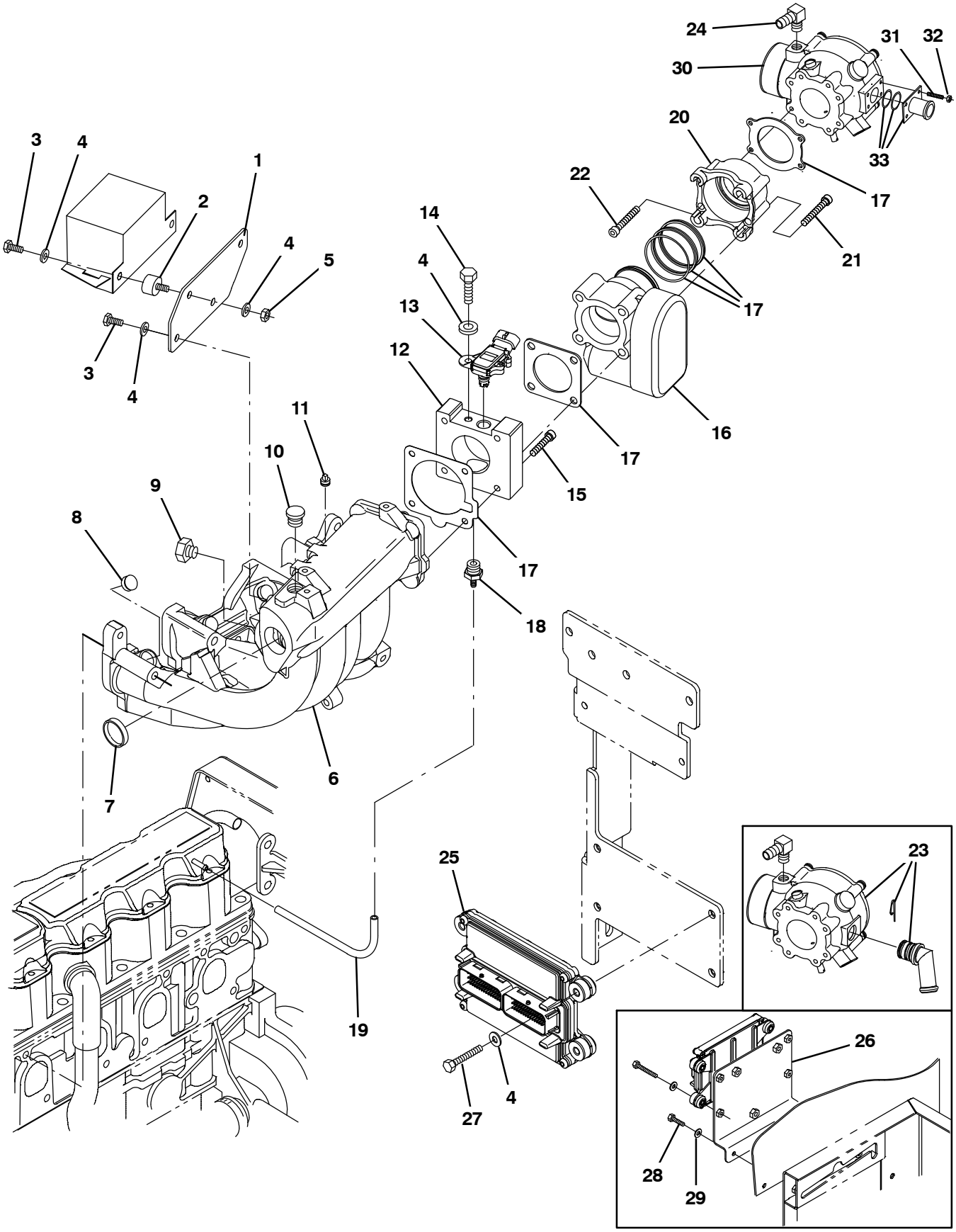

354633

Fig. 16 – GM Engine EFI Group, LPG (002000–005999)

	Ref.	Part No.	Serial Number	Description	Qty.
	1	1031312	(002000–005999)	Plate, Mtg, Relay	1
	2	372470	(002000–005999)	Isolator, Box, Relay	2
	3	19315	(002000–005999)	Screw, Hex, .25–20 X 0.50, G5	4
	4	32490	(002000–005999)	Washer, Flat, 0.25, Std	9
	5	19312	(002000–005999)	Nut, Hex, Std, .25–20	2
	6	372547	(002000–005999)	Manifold, Intake [1.6l]	1
	7	372549	(002000–005999)	Plug, Manifold, Intake	1
	8	372579	(002000–005999)	Plug, Hole, Injector	4
	9	384995	(002000–005999)	Fitting, Plug, M16, Intake Manifold	1
	10	372550	(002000–005999)	Plug, Port, Sensor [Map]	1
	11	372548	(002000–005999)	Plug, .12npt, Ss	1
	12	372534	(002000–003122)	Adapter, Intake, Throttle Body	1
	12	9006619	(003123–005999)	Adapter	1
	13	372493	(002000–005999)	Sensor [T Map]	1
	14	19317	(002000–005999)	Screw, Hex, .25–20 X 0.75, G5	1
	15	06532	(002000–005999)	Screw, Soc, M6 X 1.00 X 25, 12.9	4
	16	384974	(002000–005999)	Housing, Throttle, 40mm [Bosch]	1
	17	9003391	(002000–005999)	Gasket Kit, Repair, Lpg [Gm1.6l 2007]	1
	18	372543	(002000–005999)	Fitting, Vacuum [M16–15–6h]	1
	19	384972	(002000–005999)	Hose, Vacuum, 0.22id X 15.0l	1
	20	384996	(002000–005999)	Adapter, Valve, 400mm [Bosch]	1
	21	09037	(002000–005999)	Screw, Soc, M8 X 1.25 X 70, 12.9	4
	22	384991	(002000–005999)	Bolt, Soc Head, M5 X 80 X 35	4
	23	384980	(002000–003122)	Mixer, W/70deg Ftg	1
	24	372510	(002000–005999)	Fitting, E90	1
	25	1028722	(002000–003122)	Module, Ecu, Lpg [Gm1.6l 2700]	1
	25	1056233	(003123–005999)	Module, Ecu, Lpg [Gm1.6l 2010]	1
	26	1029082	(002000–003170)	Bracket, Mtg, Ecu	1
	27	06946	(002000–005999)	Screw, Hex, M6 X 1.00 X 35, 8.8	4
	28	06942	(002000–003170)	Screw, Hex, M6 X 1.00 X 16, 8.8	2
	29	32483	(002000–003170)	Washer, Flat, 0.25, Sae	2
▽	30	9006618	(003123–005999)	Mixer , Lpg	1
▲		9010634	(003123–005999)	Repair Kit, Mixer	1
	31	9007424	(003123–005999)	Stud, M05–0.8	4
	32	9007423	(003123–005999)	Nut, Flng, M05–0.8	4
	33	1055170	(003123–005999)	Fitting, Fuel [Mixer E100Lp 2010]	1

Fig. 17 – GM Engine Vaporizer Group, LPG (002000–003122)

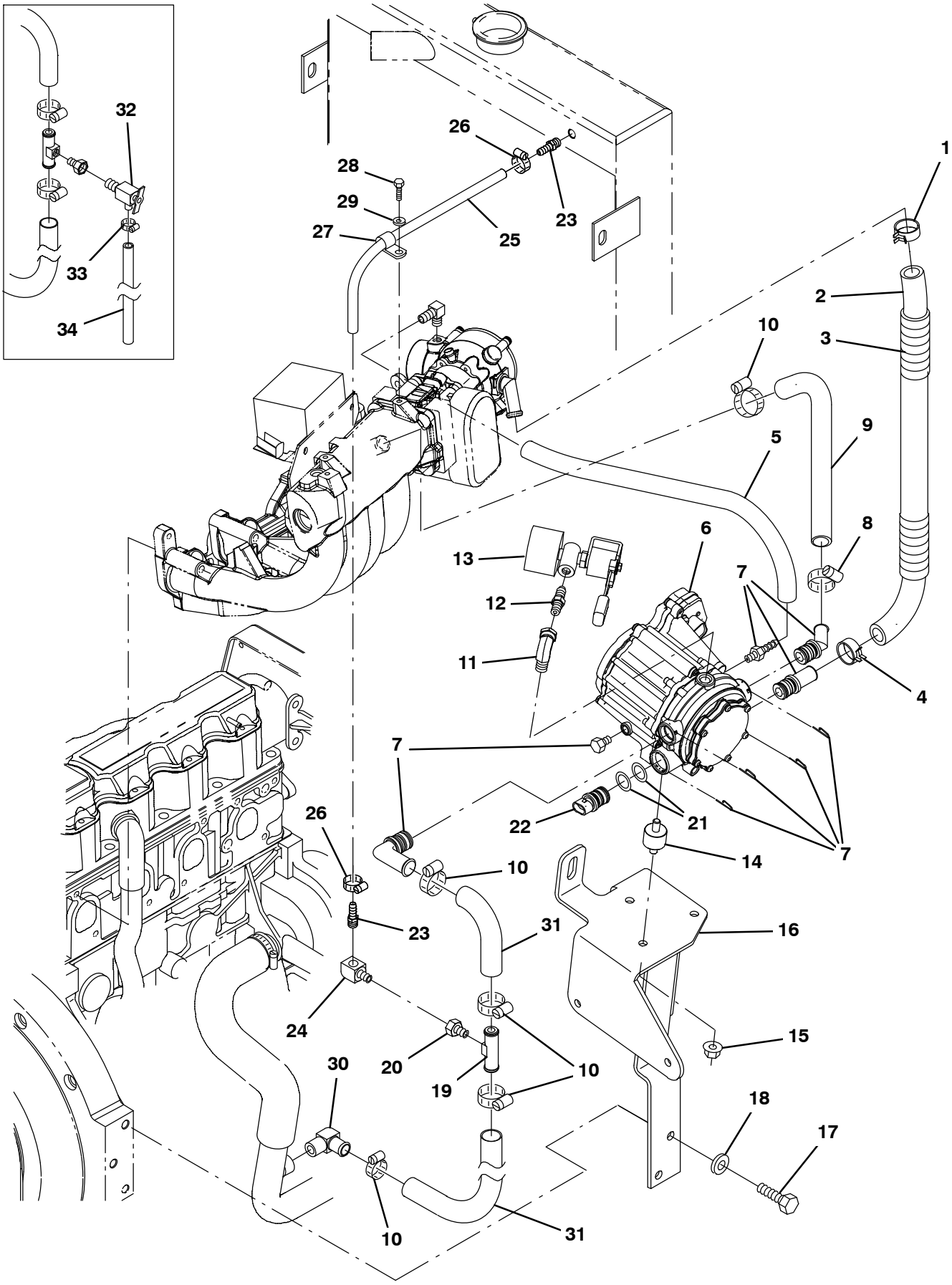

354639

Fig. 17 – GM Engine Vaporizer Group, LPG (002000–003122)

	Ref.	Part No.	Serial Number	Description	Qty.
	1	384970	(002000–003122)	Clamp, Hose, Spring, 0.75d	1
	2	384983	(002000–003122)	Hose [Mixer To Epr]	1
	3	384971	(002000–003122)	Cover, Hose	1
	4	384979	(002000–003122)	Clamp, Hose, Spring, 0.62d	1
	5	384973	(002000–003122)	Hose, Supply, Gas, .25id	1
	6	384977	(002000–003122)	Regulator [Ep]	1
	7	384978	(002000–003122)	Fitting Kit [Epr]	1
	8	372539	(002000–003122)	Clamp, Hose, 1.0	1
	9	384984	(002000–003122)	Hose [Epr To Manifold]	1
	10	63810	(002000–003122)	Clamp, Hose, Wormdrive, 0.56–1.06d, .56w	5
	11	11442–1	(002000–003122)	Fitting, Hyd, E90, Spcl	1
	12	372529	(002000–003122)	Fitting, Nipple, .25mal	1
▽	13	384975	(002000–003122)	Valve, Lock Off	1
▲		372615	(002000–003122)	Filter Kit, Fuelock, Lpg	1
	14	384986	(002000–003122)	Isolator [Epr]	3
	15	07791	(002000–003122)	Nut, Hex, Flng, M8 X 1.25	3
	16	1028343	(002000–003122)	Bracket Wldt, Mtg, Regulator, Lpg	1
	17	371770	(002000–003122)	Screw	2
	18	371877	(002000–003122)	Washer, Flat, 0.38, Hardened	2
	19	83578	(002000–003122)	Tube, Bleed, Air, .62od 2.2l .12npt, Alm	1
	20	1015930	(002000–003122)	Fitting, Brs, Str, Pf04/Pm02	1
	21	1041151	(002000–003122)	Seal, Org, Sensor, Temp [Epr]	2
	22	1041152	(002000–003122)	Sensor, Temp [Epr]	1
	23	150516	(002493–003122)	Fitting, Brs, Str, Bm06/Pm05	2
	24	27048	(002493–003122)	Fitting, Brs, E90, Pf04/Pm04	1
	25	1043481	(002493–003122)	Hose, Heater, 0.38id	1
	26	54333	(002493–003122)	Clamp, Hose, Wormdrive, 0.31–0.88d, .31w	2
	27	67767	(002493–003122)	Clamp, Cable, Stl, 0.69d X 0.62w, 1hole	1
	28	06942	(002493–003122)	Screw, Hex, M6 X 1.00 X 16, 8.8	1
	29	32490	(002493–003122)	Washer, Flat, 0.25, Std	1
	30	51839	(002000–003122)	Fitting, Brs, E90, Em10/Pm06	1
	31	372528	(002000–003122)	Hose, Mold, .62 To .75 (Cut in 2)	1
	32	51305	(002000–002492)	Fitting, Draincock, E90, .25npt	1
	33	43844	(002000–002492)	Clamp, Hose, Wormdrive, 0.25–0.62d, .31w	1
	34	73471	(002000–002492)	Hose, Pvc, Clr, 0.38id 0.56od 022.0l	1

Fig. 18 – GM Engine Vaporizer Group, LPG (003123–005999)

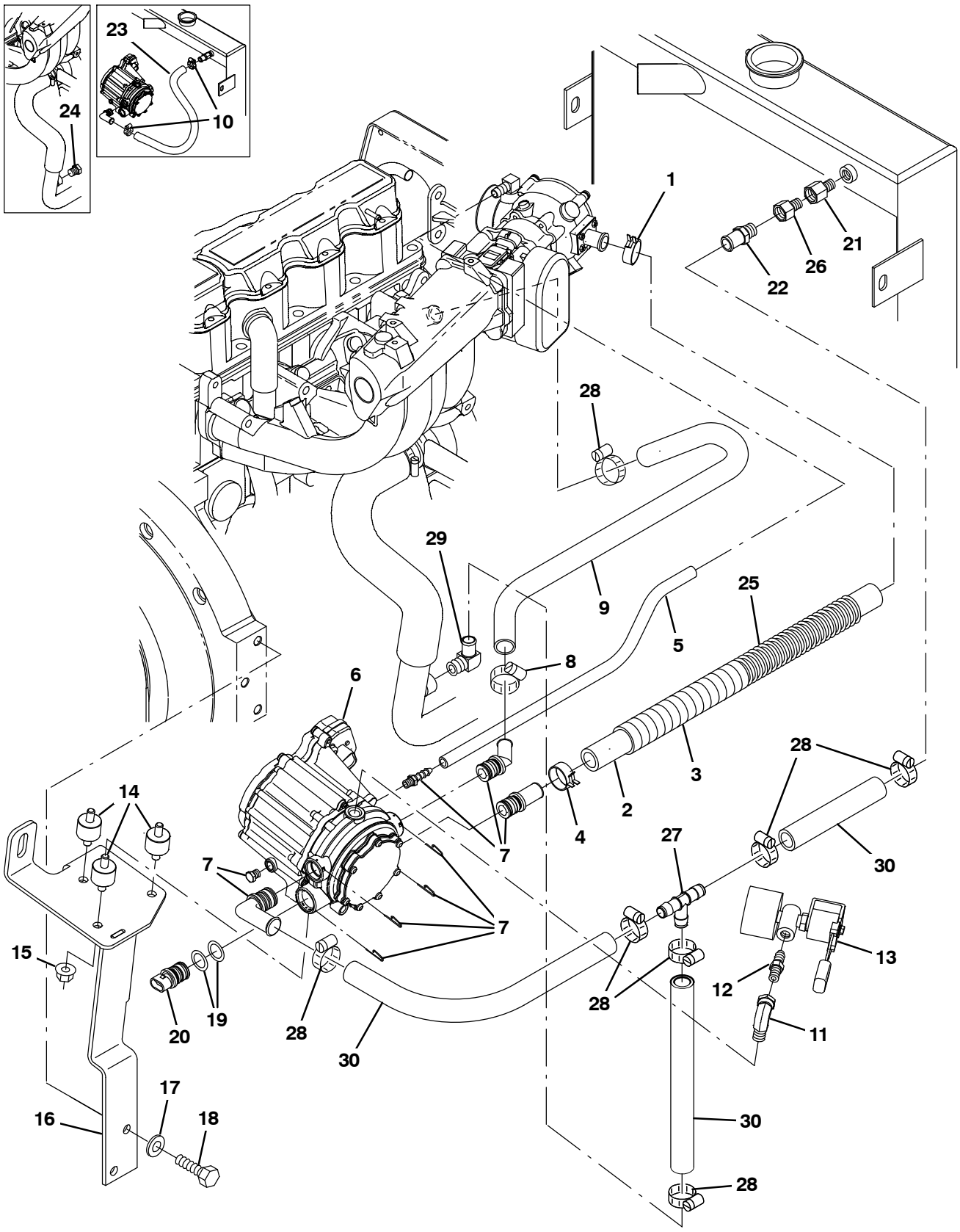

354639

Fig. 18 – GM Engine Vaporizer Group, LPG (003123–005999)

	Ref.	Part No.	Serial Number	Description	Qty.
	1	384970	(003123–005999)	Clamp, Hose, Spring, 0.75d	1
	2	9007552	(003123–005999)	Hose, Fuel [Mixer To Epr, 22.5”L]	1
	3	384971	(003123–005999)	Cover, Hose	1
	4	384979	(003123–005999)	Clamp, Hose, Spring, 0.62d	1
	5	384973	(003123–005999)	Hose, Supply, Gas, .25id	1
	6	384977	(003123–005999)	Regulator [Ep]	1
	7	384978	(003123–005999)	Fitting Kit [Epr]	1
	8	372539	(003123–005999)	Clamp, Hose, 1.0	1
	9	384984	(003123–005999)	Hose [Epr To Manifold]	1
	10	63810	(003123–003268)	Clamp, Hose, Wormdrive, 0.56–1.06d, .56w	3
	11	11442–1	(003123–005999)	Fitting, Hyd, E90, Spcl	1
	12	372529	(003123–005999)	Fitting, Nipple, .25mal	1
▽	13	9006620	(003123–005999)	Valve, Lock Off [Gm 1.6L 2010]	1
▲		9007380	(003123–005999)	Filter Kit, Fuelock, Lpg	1
	14	384986	(003123–005999)	Isolator [Epr]	3
	15	07791	(003123–005999)	Nut, Hex, Flng, M8 X 1.25	3
	16	1056300	(003123–005999)	Bracket Wldt, Mtg, Reg, Lpg[Gm 2010]	1
	17	371770	(003123–005999)	Screw	2
	18	371877	(003123–005999)	Washer, Flat, 0.38, Hardened	2
	19	1041151	(003123–005999)	Seal, Org, Sensor, Temp [Epr]	2
	20	1041152	(003123–005999)	Sensor, Temp [Epr]	1
	21	1042772	(003123–005999)	Fitting, Brs, Str, Pf06/Pm04	2
	22	27767	(003123–005999)	Fitting, Brs, Str, Em10/Pm06	1
	23	13048	(003123–003268)	Hose, Heater, 0.62id, 038.0l	1
	24	762282	(003123–003268)	Fitting, Hyd, Plug, Pm06	1
	25	9007553	(003123–005999)	Spring, 3/4 X 16 [Gm1.6L 2010 Lpg]	1
	26	1015547	(003123–005999)	Fitting, Adapter, Orifice, Pf06/Pm06	1
	27	1062116	(003269–005999)	Fitting, Plstc, Tee, Bm10/Bm10/Bm10	1
	28	63810	(003269–005999)	Clamp, Hose, Wormdrive, 0.56–1.06d, .56w	7
	29	51839	(003269–005999)	Fitting, Brs, E90, Em10/Pm06	1
	30	1016561	(003269–005999)	Hose, Afmkt, Rbr, Heater, 0.62id, 08ft	1

Fig. 19 – GM Engine Air Cleaner Group, Gasoline (000000–001999)

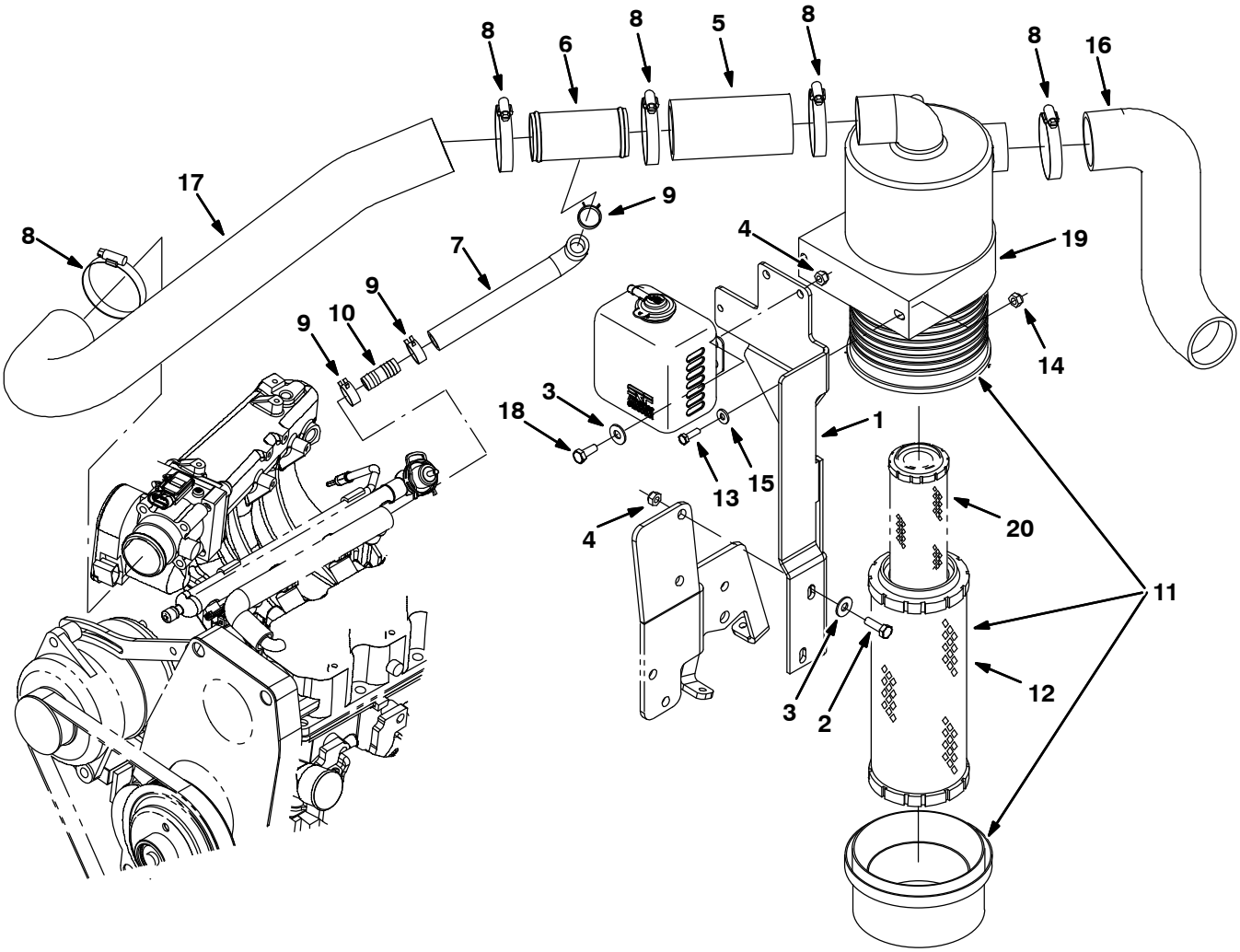

354420

Fig. 19 – GM Engine Air Cleaner Group, Gasoline (000000–001999)

	Ref.	Part No.	Serial Number	Description	Qty.
	1	1027856	(000000–001999)	Bracket, Mtg, Fltr, Air	1
	2	39277	(000000–001999)	Screw, Hex, M8 X 1.25 X 25, 8.8	2
	3	32491	(000000–001999)	Washer, Flat, 0.31, Std	4
	4	08709	(000000–001999)	Nut, Hex, Lock, M8 X 1.25, Nl	4
	5	15543–2	(000000–001999)	Hose, Rbr, 2.00id 2.50od 05.0l	1
	6	1011780	(000000–001999)	Tube Wldt, Tee	1
	7	1021514	(000000–001999)	Hose, Heater, E90, 0.62id 07.0 2.0	1
	8	14432	(000000–001999)	Clamp, Hose, Wormdrive, 1.81–2.75d, .50w	5
	9	1011899	(000000–001999)	Clamp, Hose, Spring Stl, 0.86d X 0.38w	3
	10	365164	(000000–001999)	Fitting, Plstc, Str, Bm10/Bm10	1
▽	11	369745	(000000–001999)	Filter Assy, Air	1
▲	12	369746	(000000–001999)	Element, Fltr, Air [Dn]	1
	13	06943	(000000–001999)	Screw, Hex, M6 X 1.0 X 20, 8.8	2
	14	08708	(000000–001999)	Nut, Hex, Lock, M6 X 1.0, Nl	2
	15	32483	(000000–001999)	Washer, Flat, 0.25 Sae	2
	16	1020949	(000000–001999)	Hose, Intake, Mold, 2.00id [Epdm]	1
	17	1017978	(000000–001999)	Hose, Intake, Mold, 2.00id, Gas [Epdm]	1
	18	16931	(000000–001999)	Screw, Hex, M8 X 1.25 X 20, 8.8	2
	19	369747	(000000–001999)	Clamp, Mtg, Fltr, Air	1
	20	398279	(000000–001999)	Element, Fltr, Air, Safety (OPTION)	1

Fig. 20 – GM Engine Air Cleaner Group, Gasoline (002000–005999)

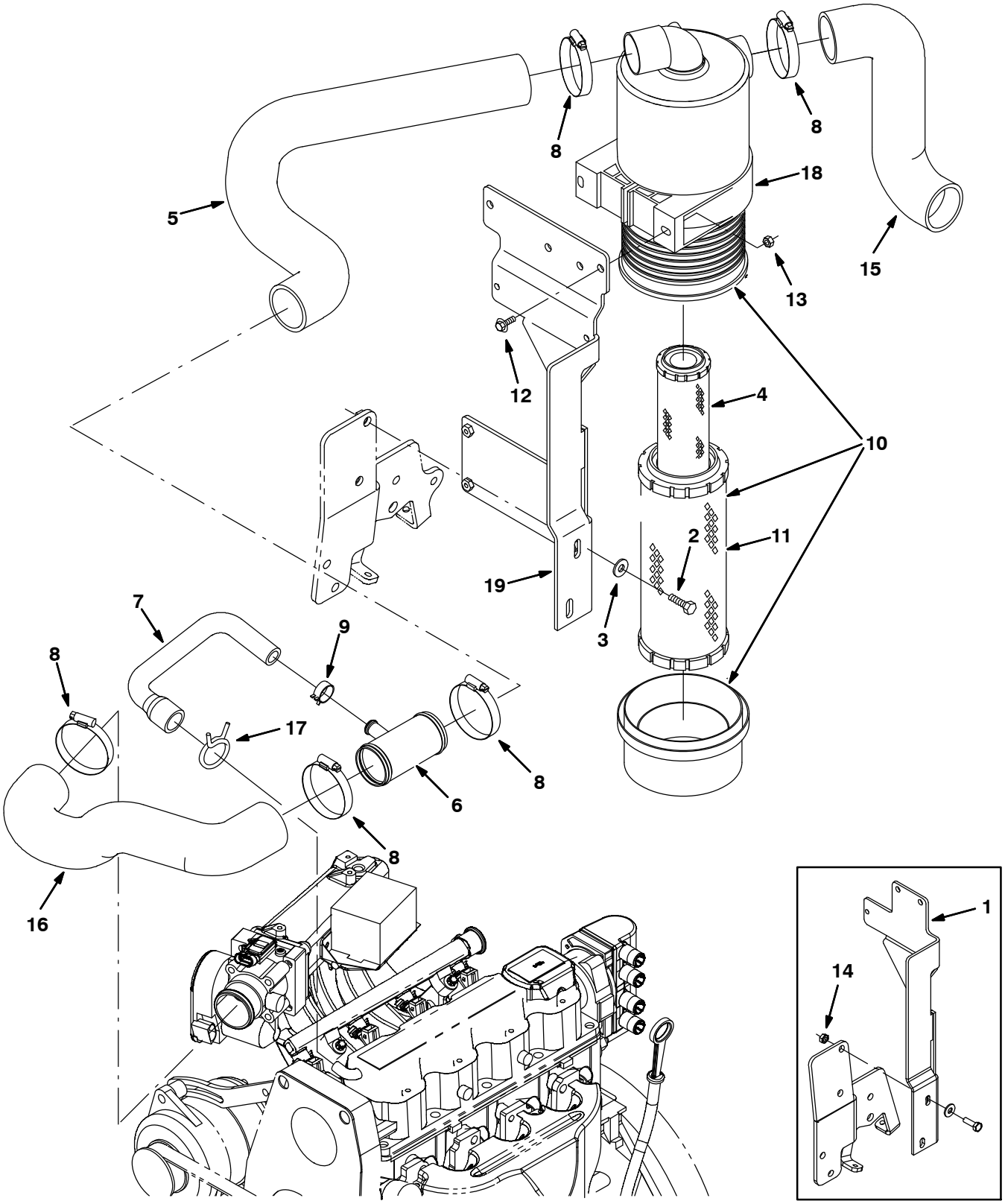

354420

Fig. 20 – GM Engine Air Cleaner Group, Gasoline (002000– 005999)

	Ref.	Part No.	Serial Number	Description	Qty.
	1	1027856	(002000–003122)	Bracket, Mtg, Fltr, Air	1
	2	39277	(002000–005999)	Screw, Hex, M8 X 1.25 X 25, 8.8	2
	3	32491	(002000–005999)	Washer, Flat, 0.31, Std	2
	4	398279	(002000–005999)	Element, Fltr, Air, Safety (OPTION)	1
	5	1031614	(002000–005999)	Hose, Intake, Mold, 2.0id [Epdm M20/T20]	1
	6	1011780	(002000–005999)	Tube Wldt, Tee	1
	7	1032323	(002000–005999)	Hose, Vent, E90, 0.62id[Gm1.6l 2007]	1
	8	14432	(002000–005999)	Clamp, Hose, Wormdrive, 1.81–2.75d, .50w	5
	9	1011899	(002000–005999)	Clamp, Hose, Spring Stl, 0.86d X 0.38w	1
▽	10	369745	(002000–005999)	Filter Assy, Air	1
▲	11	369746	(002000–005999)	Element, Fltr, Air [Dn]	1
	12	1036892	(002000–005999)	Screw, Hex, M6 X 1.00 X 25, 9.8 Sems	2
	13	08708	(002000–005999)	Nut, Hex, Lock, M6 X 1.00, Nl	2
	14	08709	(002000–007328)	Nut, Hex, Lock, M8 X 1.25, Nl	2
	15	1020949	(002000–005999)	Hose, Intake, Mold, 2.00id [Epdm]	1
	16	1031609	(002000–005999)	Hose, Intake, Mold, 2.0id, Gas	1
	17	371854	(002000–005999)	Clamp, Spring, 1.50	1
	18	369747	(002000–005999)	Clamp, Mtg, Fltr, Air	1
	19	1056355	(003123–005999)	Bracket, Mtg, Fltr, Air	1

Fig. 21 – GM Engine Air Cleaner Group, LPG (000000–001999)

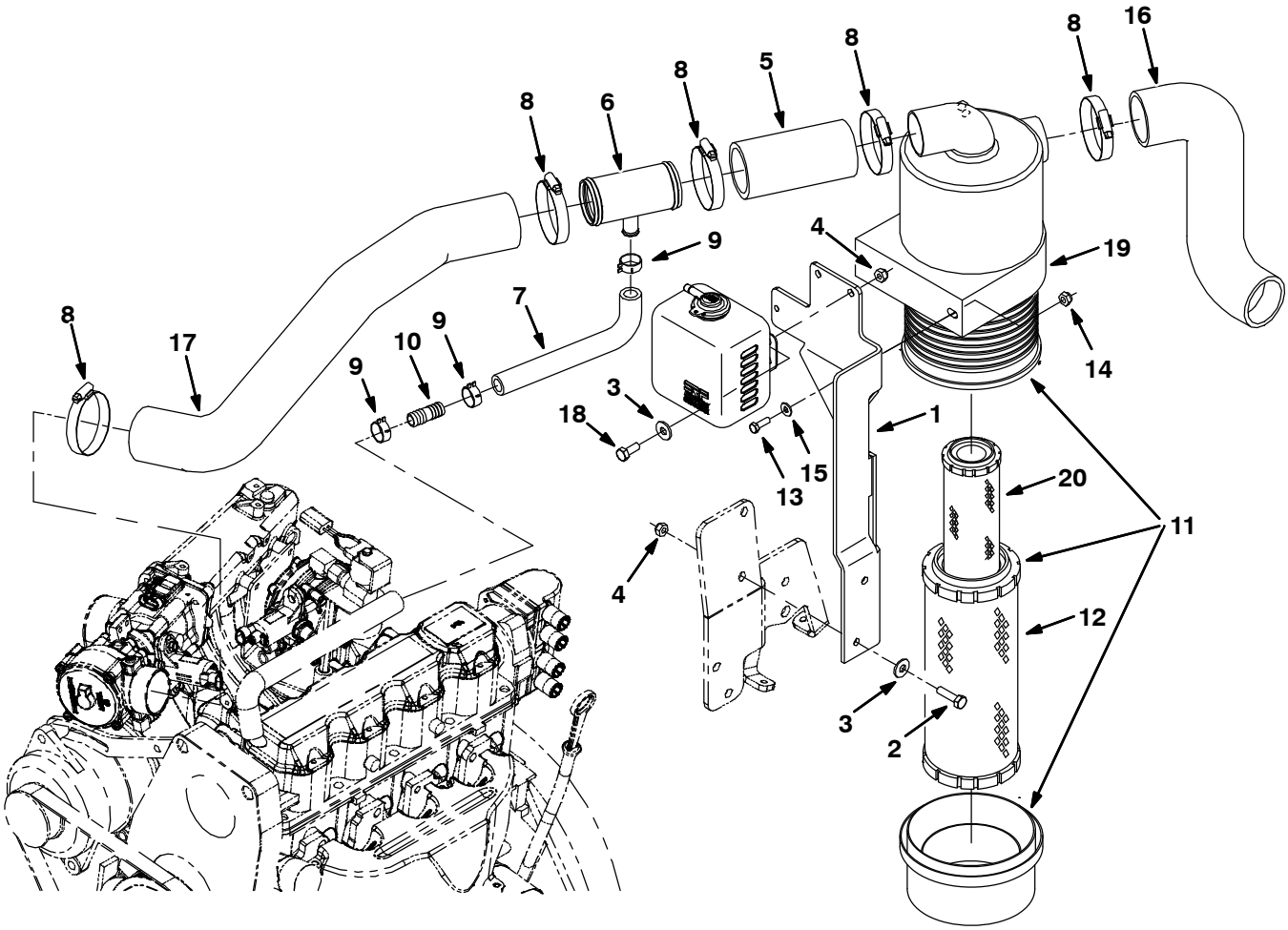

354421

Fig. 21 – GM Engine Air Cleaner Group, LPG (000000–001999)

	Ref.	Part No.	Serial Number	Description	Qty.
	1	1027856	(000000–001999)	Bracket, Mtg, Fltr, Air	1
	2	39277	(000000–001999)	Screw, Hex, M8 X 1.25 X 25, 8.8	2
	3	32491	(000000–001999)	Washer, Flat, 0.31, Std	4
	4	08709	(000000–001999)	Nut, Hex, Lock, M8 X 1.25, Nl	4
	5	15543–2	(000000–001999)	Hose, Rbr, 2.00id 2.50od 05.0l	1
	6	1011780	(000000–001999)	Tube Wldt, Tee	1
	7	1021514	(000000–001999)	Hose, Heater, E90, 0.62id 07.0 2.0	1
	8	14432	(000000–001999)	Clamp, Hose, Wormdrive, 1.81–2.75d, .50w	5
	9	1011899	(000000–001999)	Clamp, Hose, Spring Stl, 0.86d X 0.38w	3
	10	365164	(000000–001999)	Fitting, Plstc, Str, Bm10/Bm10	1
▽	11	369745	(000000–001999)	Filter Assy, Air	1
▲	12	369746	(000000–001999)	Element, Fltr, Air [Dn]	1
	13	06943	(000000–001999)	Screw, Hex, M6 X 1.0 X 20, 8.8	2
	14	08708	(000000–001999)	Nut, Hex, Lock, M6 X 1.0, Nl	2
	15	32483	(000000–001999)	Washer, Flat, 0.25 Sae	2
	16	1020949	(000000–001999)	Hose, Intake, Mold, 2.00id [Epdm]	1
	17	1017987	(000000–001999)	Hose, Intake, Mold, 2.00id, Lpg [Epdm]	1
	18	16931	(000000–001999)	Screw, Hex, M8 X 1.25 X 20, 8.8	2
	19	369747	(000000–001999)	Clamp, Mtg, Fltr, Air	1
	20	398279	(000000–001999)	Element, Fltr, Air, Safety (OPTION)	1

Fig. 22 – GM Engine Air Cleaner Group, LPG (002000–005999)

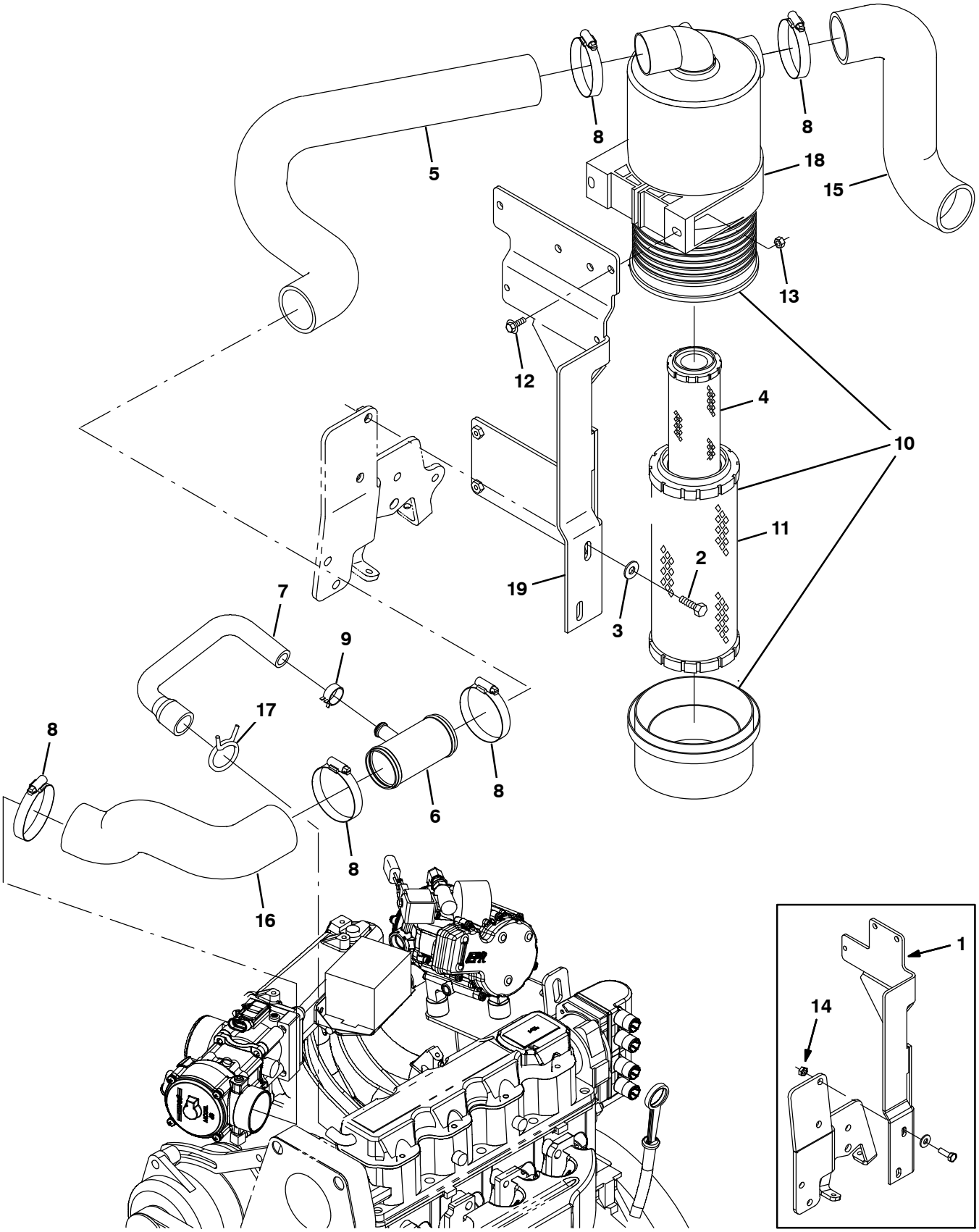

354421

Fig. 22 – GM Engine Air Cleaner Group, LPG (002000–005999)

	Ref.	Part No.	Serial Number	Description	Qty.
	1	1027856	(002000–003122)	Bracket, Mtg, Fltr, Air	1
	2	39277	(002000–005999)	Screw, Hex, M8 X 1.25 X 25, 8.8	2
	3	32491	(002000–005999)	Washer, Flat, 0.31, Std	2
	4	398279	(002000–005999)	Element, Fltr, Air, Safety (OPTION)	1
	5	1031614	(002000–005999)	Hose, Intake, Mold, 2.0id [Epdm M20/T20]	1
	6	1011780	(002000–005999)	Tube Wldt, Tee	1
	7	1032323	(002000–005999)	Hose, Vent, E90, 0.62id[Gm1.6l 2007]	1
	8	14432	(002000–005999)	Clamp, Hose, Wormdrive, 1.81–2.75d, .50w	5
	9	1011899	(002000–005999)	Clamp, Hose, Spring Stl, 0.86d X 0.38w	1
▽	10	369745	(002000–005999)	Filter Assy, Air	1
▲	11	369746	(002000–005999)	Element, Fltr, Air [Dn]	1
	12	1036892	(002000–005999)	Screw, Hex, M6 X 1.00 X 25, 9.8 Sems	2
	13	08708	(002000–005999)	Nut, Hex, Lock, M6 X 1.00, Nl	2
	14	08709	(002000–007328)	Nut, Hex, Lock, M8 X 1.25, Nl	2
	15	1020949	(002000–005999)	Hose, Intake, Mold, 2.00id [Epdm]	1
	16	1031553	(002000–003122)	Hose, Intake, Mold, 2.0id, Lpg	1
	16	1054558	(003123–005999)	Hose, Intake, Mold, 2.0id, Lpg [Gm 2010]	1
	17	371854	(002000–005999)	Clamp, Spring, 1.50	1
	18	369747	(002000–005999)	Clamp, Mtg, Fltr, Air	1
	19	1056355	(003123–005999)	Bracket, Mtg, Fltr, Air	1

Fig. 23 – GM Engine Alternator and Fan Group (000000–005999)

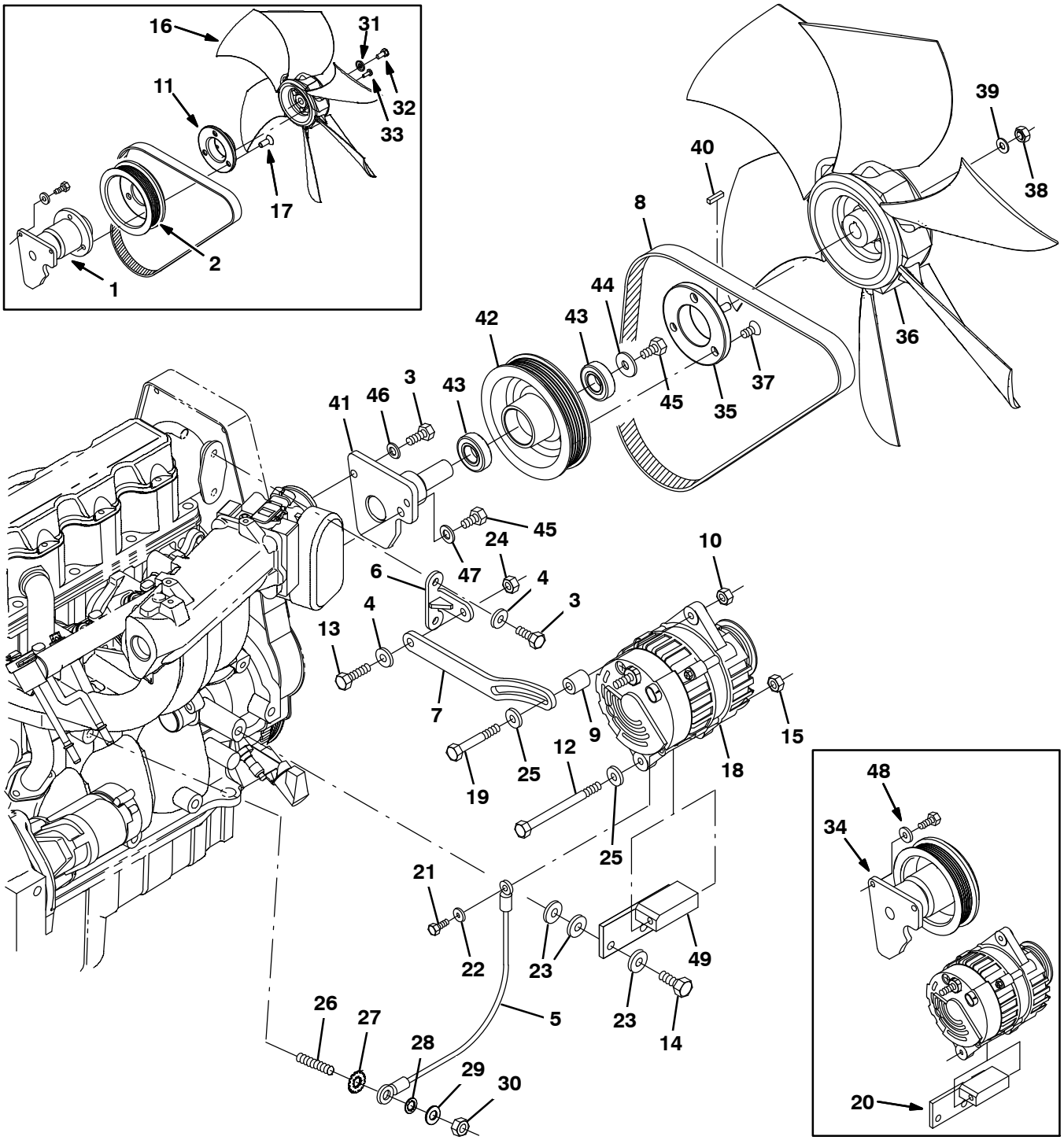

354422

Fig. 23 – GM Engine Alternator and Fan Group (000000–005999)

Ref.	Part No.	Serial Number	Description	Qty.
1	371863	(000000–001999)	Base Assy, Fan, W/O Pulley	1
2	1033428	(000000–001999)	Sheave, 5.00dia [Gm1.6l 2007]	1
3	16931	(000000–005999)	Screw, Hex, M8 X 1.25 X 20, 8.8	4
4	371865	(000000–005999)	Washer, Flat, 0.31, Hardened	5
5	31525	(000000–005999)	Wire, 10ga 16.0l Blk .25ring /.38ring	1
6	371871	(000000–005999)	Bracket, Anchor, Strap, Alternator	1
7	371872	(000000–005999)	Strap, Adj, Alternator	1
8	1033644	(000000–005999)	Belt, Ribbed, 38.5l	1
9	372557	(000000–005999)	Spacer, Strap, Adj, Alternator	1
10	39311	(000000–005999)	Nut, Hex, Std, M8 X 1.25	1
11	1032242	(000000–001999)	Spacer, Fan	1
12	39785	(000000–005999)	Screw, Hex, .31–18 X 4.50, 5	1
13	76958	(000000–005999)	Screw, Hex, .31–18 X 1.75, 5	1
14	06961	(000000–005999)	Screw, Hex, M10 X 1.5 X 20, 8.8	2
15	32983	(000000–005999)	Nut, Hex, Lock, .31–18, Nl	1
16	1035031	(000000–001999)	Fan, Cooling, Pusher, 15.5D [2007]	1
17	48998	(000000–001999)	Screw, Flt, .38–16 X 1.00, Al	3
18	393209	(000000–005999)	Alternator, 12vdc 075a [Multi Grv]	1
19	363976	(000000–005999)	Screw, Hex, M8 X 1.25 X 60, 8.8, Fl	1
20	9006917	(000000–003122)	Bracket Kit, Alternator, Repair	1
21	42011	(000000–005999)	Screw, Hex, #10–24 X 0.50, Ss	1
22	19066	(000000–005999)	Washer, Flat, #10	1
23	32485	(000000–005999)	Washer, Flat, 0.38 Sae	4
24	19313	(000000–005999)	Nut, Hex, Std, .31–18	1
25	39349	(000000–005999)	Washer, Flat, 0.31 Sae	2
26	384442	(000000–005999)	Stud, M10 X 1.50 [35]	1
27	32988	(000000–005999)	Washer, Lock, Int, 0.38	1
28	41142	(000000–005999)	Washer, Lock, Int–Ext, 0.38	1
29	32485	(000000–005999)	Washer, Flat, 0.38 Sae	1
30	32716	(000000–005999)	Nut, Hex, Jam, M10 X 1.5, Ss	1
31	41186	(000000–001999)	Washer, Flat, Belleville, .31	1
32	16735	(000000–001999)	Screw, Hex, M8 X 1.25 X 16, 8.8	1
33	09145	(000000–001999)	Screw, Pan, M6 X 1.00 X 16, 4.8	3
34	9007088	(002000–003122)	Sheave Assy Kit, Repair	1
35	1035530	(002000–005999)	Spacer, Fan, Taper [2007]	1
36	1035771	(002000–003038)	Fan, Cooling, 15.5d, 6 Blade, .5b Taper	1
36	1046237	(003039–005999)	Fan, Cooling, 16.0d, 6 Blade	1
37	48996	(002000–005999)	Screw, Flt, .38–16 X 0.75, Al	3
38	08709	(002000–005999)	Nut, Hex, Lock, M8 X 1.25, Nl	1
39	32491	(002000–005999)	Washer, Flat, 0.31, Std	1
40	00960	(002000–005999)	Key, Sq, 0.12 X 0.12, 0.50l	1
41	1055381	(003123–005999)	Plate Wldt, Fan, Hub [Gm 1.6l]	1
42	1055425	(003123–005999)	Sheave, Mach [Gm1.6l]	1
43	1055377	(003123–005999)	Bearing, Ball, 20mm B 42mm D 12mm W	2
44	1014563	(003123–005999)	Washer, Flat, 0.40b 1.12d .12, Ss	1
45	21195	(003123–005999)	Screw, Hex, .38–16 X 0.75, G5	2
46	39349	(003123–005999)	Washer, Flat, 0.31, Sae	2
47	32485	(003123–005999)	Washer, Flat, 0.38, Sae	1
48	371865	(000000–003122)	Washer, Flat, 0.31, Hardened	2
49	1008640	(003123–005999)	Bracket Wldt, Alternator, Lower [Gm1.6l]	1

Fig. 24 – GM Engine Muffler Group (000000–001999)

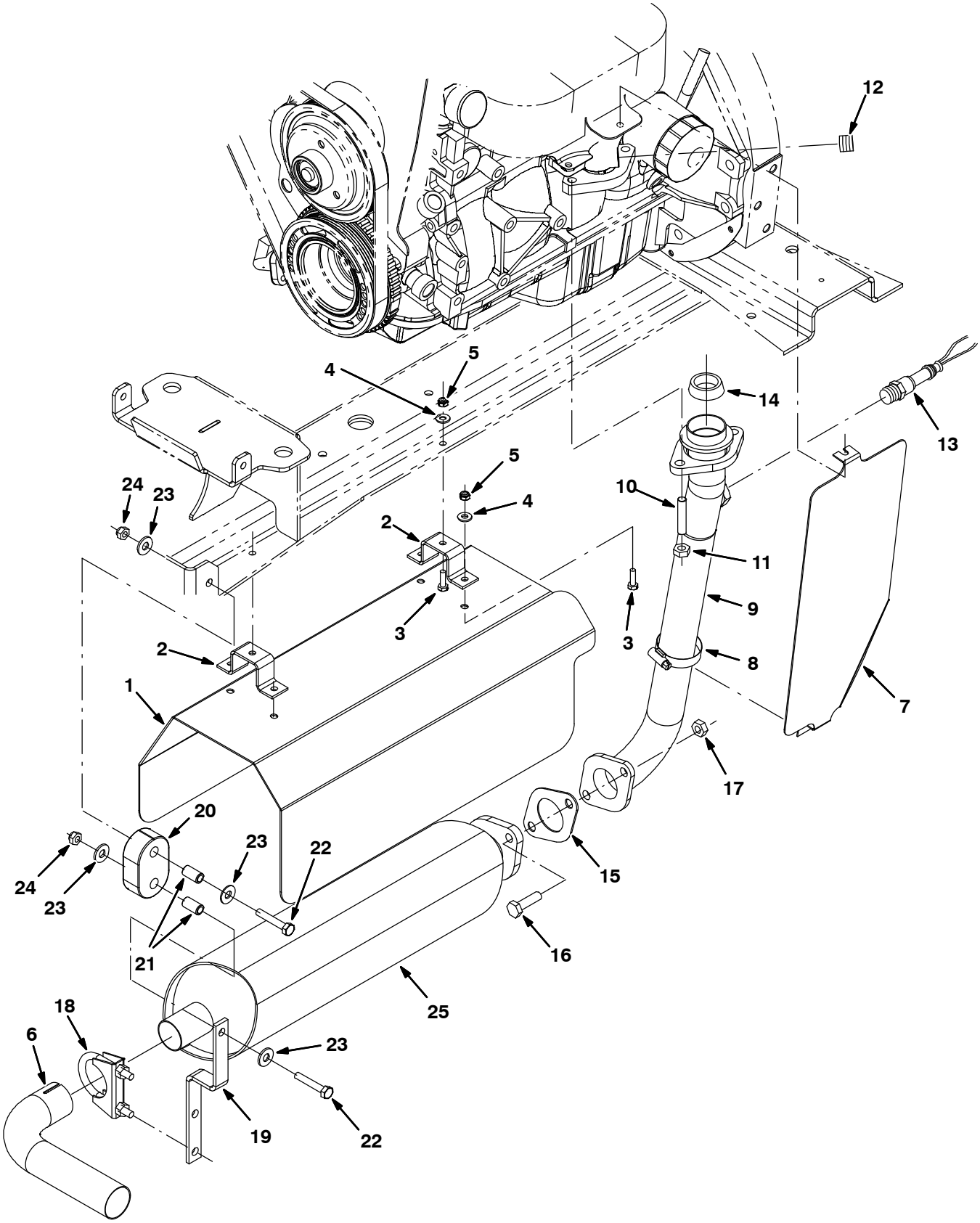

354423

Fig. 24 – GM Engine Muffler Group (000000–001999)

Ref.	Part No.	Serial Number	Description	Qty.
1	1020602	(000000–001999)	Channel, Shield, Muffler	1
2	1022113	(000000–001999)	Bracket, Retainer, Shield, Heat	2
3	08716	(000000–001999)	Screw, Hex, M6 X 1.0 X 20, Ss	6
4	32483	(000000–001999)	Washer, Flat, 0.25 Sae	6
5	08712	(000000–001999)	Nut, Hex, Lock, M6 X 1.0, Ss, Nl	6
6	1021789	(000000–001999)	Tube, Exhaust, 1.5d	1
7	9002394	(000000–001999)	Plate, Shield, Heat, Gas/Lpg, Replmt	1
8	79381	(000000–001999)	Clamp, Hose, Wormdrive, 1.25–2.00D, .50W	1
9	1018142	(000000–001999)	Tube Wldt, Exhaust, Gas/Lpg	1
10	384442	(000000–001999)	Stud, M10 X 1.50 [35]	2
11	08166	(000000–001999)	Nut, Hex, M10 X 1.50 [Stover]	2
12	371860	(000000–001999)	Fitting, Pipe, Plug, Metric, M18,Soc	1
13	372491	(000000–001999)	Sensor, Oxygen	1
14	371861	(000000–001999)	Gasket, Flng, Pipe, Exhaust	1
15	1011216	(000000–001999)	Gasket, Exhaust, 2hole, 3.4bc	1
16	39284	(000000–001999)	Screw, Hex, M10 X 1.5 X 35, 8.8	2
17	08166	(000000–001999)	Nut, Hex, M10 X 1.5 [Stover]	2
18	24012	(000000–001999)	Clamp, Muffler, 1.62d	1
19	1017969	(000000–001999)	Bracket, Muffler, Hanger, Front	1
20	1013031	(000000–001999)	Isolator, Rbr	1
21	222496	(000000–001999)	Sleeve, P/M, 0.31b 0.50d 0.9l [430ss]	2
22	222505	(000000–001999)	Screw, Hex, M8 X 1.25 X 45, Ss	2
23	01685	(000000–001999)	Washer, Flat, 0.31, Ss	4
24	08713	(000000–001999)	Nut, Hex, Lock, M8 X 1.25, Nl, Ss	2
25	1022794	(000000–001999)	Muffler, Short [Non–Catalytic Gm1.6/3.0]	1
25	1016624	(000000–001999)	Muffler, Catalytic [Gm 1.6]	1

Fig. 25 – GM Engine Muffler Group (002000–005999)

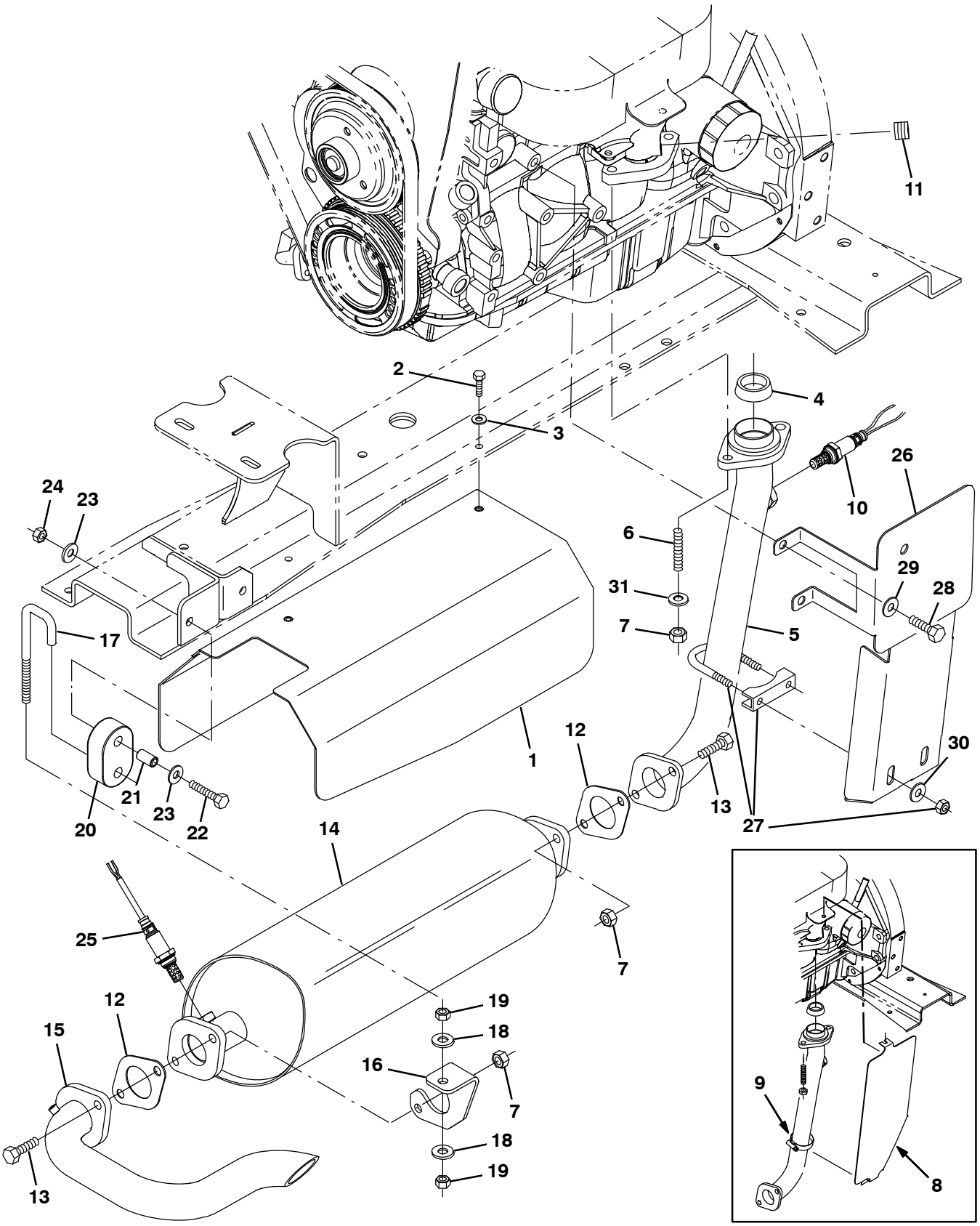

354423

Fig. 25 – GM Engine Muffler Group (002000–005999)

Ref.	Part No.	Serial Number	Description	Qty.
1	1028994	(002000–005999)	Channel, Shield, Muffler [M20/T20 2007]	1
2	08716	(002000–005999)	Screw, Hex, M6 X 1.0 X 20, Ss	2
3	32483	(002000–005999)	Washer, Flat, 0.25, Sae	2
4	371861	(002000–005999)	Gasket, Flng, Pipe, Exhaust	1
5	9012597	(002000–005999)	Pipe Kit, Exhaust, Replmt [M20.T20, M30]	1
6	384442	(002000–005999)	Stud, M10 X 1.50 [35]	2
7	08166	(002000–005999)	Nut, Hex, M10 X 1.50 [Stover]	6
8	9002394	(002000–002395)	Plate, Shield, Heat, Gas/Lpg, Replmt	1
9	79381	(002000–002395)	Clamp, Hose, Wormdrive, 1.25–2.00D, .50W	1
10	1028559	(002000–003122)	Sensor, Oxygen [Gm 1.6L/3.0L 2007]	1
10	1028558	(003123–005999)	Sensor, Exhaust, Tailpipe	1
11	371860	(002000–005999)	Fitting, Pipe, Plug, Metric, M18,Soc	1
12	1011216	(002000–005999)	Gasket, Exhaust, 2hole, 3.4bc	2
13	39284	(002000–005999)	Screw, Hex, M10 X 1.5 X 35, 8.8	4
14	1028136	(002000–003122)	Muffler, Catalytic [Gm 1.6l 2007]	1
14	1056241	(003123–005999)	Muffler, Catalytic [Gm 1.6l 2010]	1
15	1028753	(002000–005999)	Tube, Exhaust, Flng, 1.5d [M20/T20 2007]	1
16	1028929	(002000–005999)	Bracket, Mtg, Muffler [M20/T20 2007]	1
17	1013117	(002000–005999)	Rod, Hanger, Isolator	1
18	32492	(002000–005999)	Washer, Flat, 0.38, Std	2
19	25014	(002000–005999)	Nut, Hex, Std, .38–16	2
20	1013031	(002000–005999)	Isolator, Rbr	1
21	222496	(002000–005999)	Sleeve, P/M, 0.31b 0.50d 0.9l [430ss]	1
22	222505	(002000–005999)	Screw, Hex, M8 X 1.25 X 45, Ss	1
23	01685	(002000–005999)	Washer, Flat, 0.38b 0.88d .08, Ss	2
24	08713	(002000–005999)	Nut, Hex, Lock, M8 X 1.25, Nl, Ss	1
25	1028558	(002000–005999)	Sensor, Exhaust, Tailpipe	1
26	9003832	(002396–005999)	Shield, Heat, Gas/Lpg, Replmt	1
26	9004983	(002396–005999)	Shield, Heat, Gas/Lpg, Replmt (Japan Only)	1
27	24012	(002396–005999)	Clamp, Muffler, 1.62d	1
28	06961	(002396–005999)	Screw, Hex, M10 X 1.50 X 20, 8.8	2
29	32485	(002396–005999)	Washer, Flat, 0.38, Sae	2
30	32491	(002396–005999)	Washer, Flat, 0.31, Std	2
31	41187	(002000–005999)	Washer, Flat, Belleville, .38	2

Fig. 26 – GM Engine Radiator Group (000000–003038)

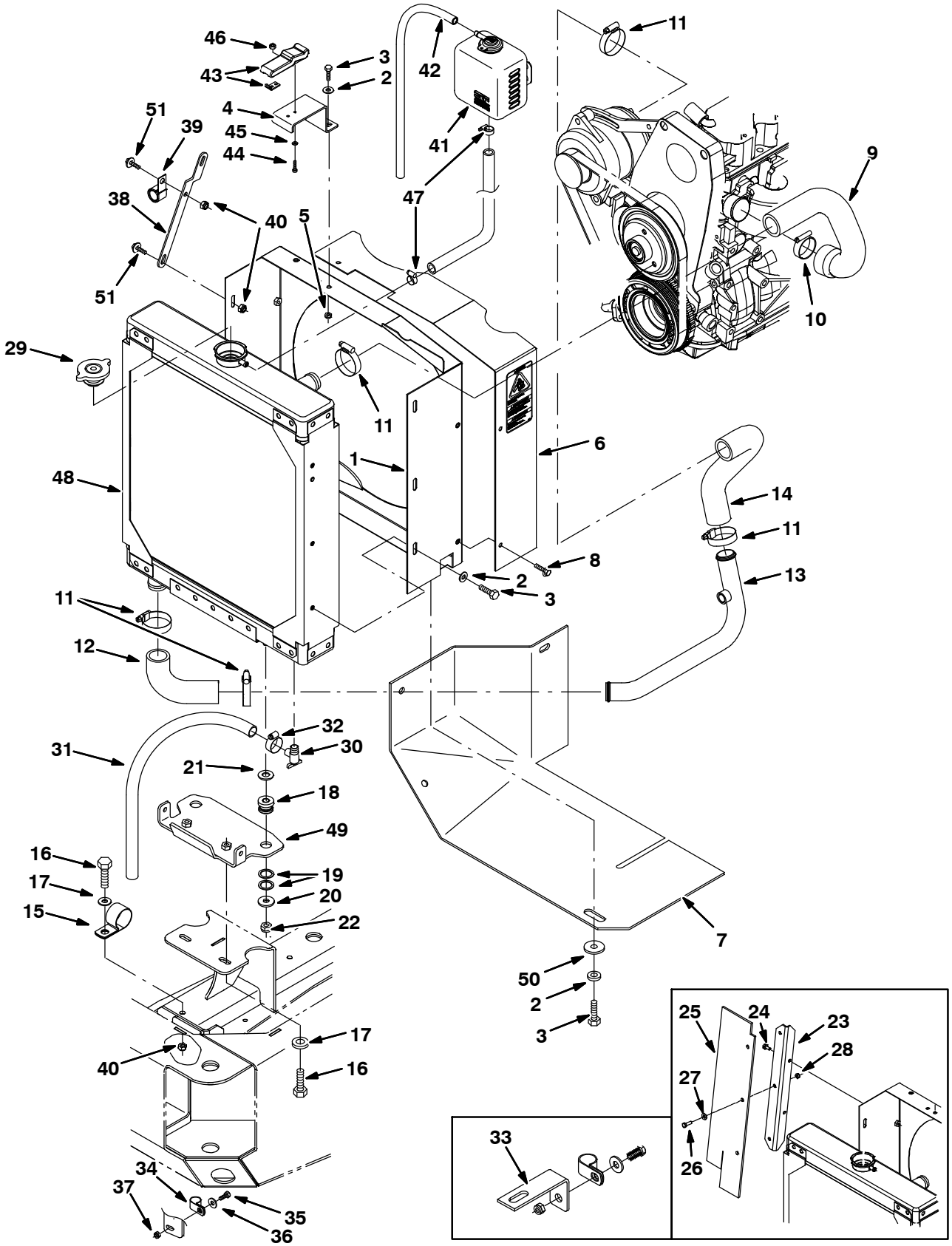

354424

Fig. 26 – GM Engine Radiator Group (000000–003038)

Ref.	Part No.	Serial Number	Description	Qty.
1	1038499	(000000–003038)	Panel Wldt, Shrd, Fan	1
2	32490	(000000–003038)	Washer, Flat, 0.25 Std	9
3	06942	(000000–003038)	Screw, Hex, M6 X 1.0 X 16, 8.8	13
4	1018463	(000000–003038)	Bracket, Mtg, Latch	1
5	08708	(000000–003038)	Nut, Hex, Lock, M6 X 1.0, Nl	5
6	9003997	(000000–003038)	Plate, Guard, Fan Shrd, Gas/Lpg, Replmt	1
7	1035222	(000000–003038)	Skirt, Debris, Eng Radiator	1
8	74455	(000000–003038)	Screw, Hex, M6 X 1.0 X 12, Fmg	3
9	1011799	(000000–003038)	Hose, Radiator, Upper, Mold	1
10	22297	(000000–003038)	Clamp, Hose, Wormdrive, 1.56–2.50d, .50w	1
11	79381	(000000–003038)	Clamp, Hose, Wormdrive, 1.25–2.00D, .50W	7
12	1007482	(000000–003038)	Hose, Rbr, E90 1.25id 1.25id 04.2 03.1	1
13	1019273	(000000–003038)	Tube, Coolant, Lower, 1.3d	1
14	1019265	(000000–003038)	Hose, Radiator, Lower, Mold	1
15	53466	(000000–003038)	Clamp, Cable, Stl, 1.50d X 1.00w, 1h	1
16	39277	(000000–003038)	Screw, Hex, M8 X 1.25 X 25, 8.8	3
17	32491	(000000–003038)	Washer, Flat, 0.31, Std	3
18	54274	(000000–003038)	Isolator, Vib, Bshg, 1.1d 0.6l .4b 0.78h	2
19	09832	(000000–003038)	Washer, Flat, 0.81b 1.06d .06, Stl	4
20	1014563	(000000–003038)	Washer, Flat, 0.40b 1.12d .12, Ss	2
21	32486	(000000–003038)	Washer, Flat, 0.50 Sae	2
22	41430	(000000–003038)	Nut, Hex, Lock, M10 X 1.5, Nl	2
23	1027099	(000000–001261)	Plate, Mtg, Seal	1
24	74455	(000000–001261)	Screw, Hex, M6 X 1.0 X 12, Fmg	2
25	1027103	(000000–001261)	Seal, Radiator	1
26	06943	(000000–003038)	Screw, Hex, M6 X 1.0 X 20, 8.8	4
27	32483	(000000–001261)	Washer, Flat, 0.25 Sae	3
28	08708	(000000–001261)	Nut, Hex, Lock, M6 X 1.0, Nl	3
29	1045764	(000000–003038)	Cap, Radiator, 14psi [Stant Ao–2516]	1
30	51305	(000000–003038)	Fitting, Draincock, E90, .25npt	1
31	73471	(000000–003038)	Hose, Pvc, Clr, 0.38id 0.56od 22.00l	1
32	43844	(000000–003038)	Clamp, Hose, Wormdrive, 0.25–0.62d, .31w	1
33	1026003	(000000–002241)	Bracket, Ftg, Bh	1
34	67767	(000000–003038)	Clamp, Cable, Stl, 0.69d X 0.62w, 1h	1
35	09740	(000000–003038)	Screw, Hex, M8 X 1.25 X 20, Ss	1
36	01685	(000000–003038)	Washer, Flat, 0.31, Ss	1
37	08713	(000000–003038)	Nut, Hex, Lock, M8 X 1.25, Nl, Ss	1
38	1019968	(000000–003038)	Bracket, Mtg, Radiator	1
39	30407	(000000–003038)	Clip, Keeper, Open	1
40	08709	(000000–003038)	Nut, Hex, Lock, M8 X 1.25, Nl	4
41	1023853	(000000–003038)	Tank, Coolant, 04.7 03.3 4.7deep, 1liter	1
42	1015041	(000000–003038)	Hose, Afmkt, Coolant Recvy, 05ft	1
43	49800	(000000–003038)	Latch	1
44	06927	(000000–003038)	Screw, Pan, M4 X 0.70 X 16, 4.8	2
45	19064	(000000–003038)	Washer, Flat, #06	2

Fig. 26 – GM Engine Radiator Group (000000–003038)

Ref.	Part No.	Serial Number	Description	Qty.
46	02850	(000000–003038)	Nut, Hex, Lock, M4 X 0.7, Nl	2
47	43844	(000000–003038)	Clamp, Hose, Wormdrive, 0.25–0.62d, .31w	2
48	1045316	(000000–002492)	Radiator Kit, Replmt, Ci	1
48	1041291	(002493–003038)	Radiator	1
49	1035976	(001338–003038)	Bracket, Sppt, Radiator, Upper	1
50	41178	(000000–003038)	Washer, Flat, 0.25, Fendr	3
51	1040467	(000000–003038)	Screw, Hex, M6 X 1.0 X 20, 9.8, Sems	2

Fig. 27 – GM Engine Radiator and Mount Group (003039–005999)

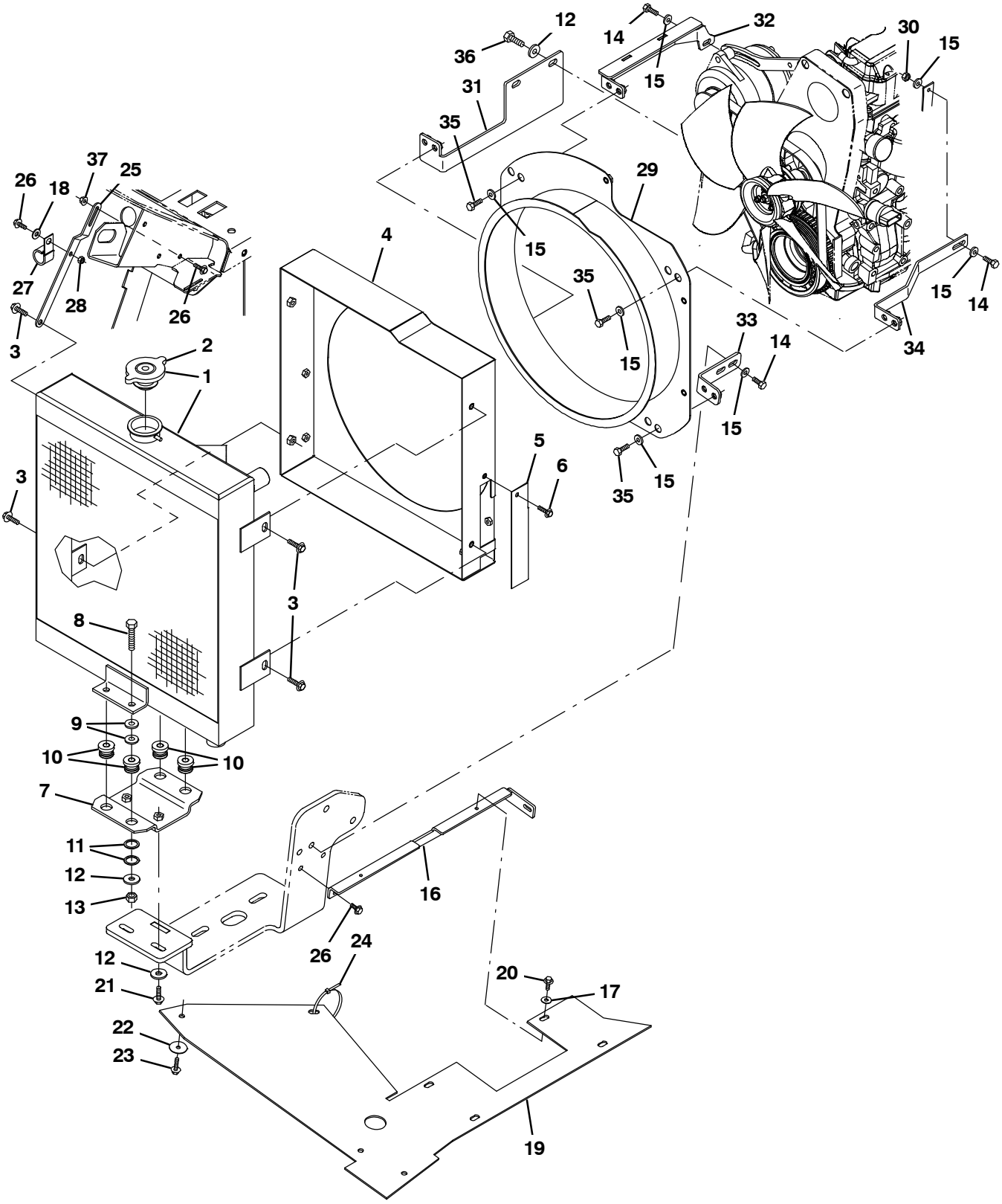

356020

Fig. 27 – GM Engine Radiator and Mount Group (003039–005999)

	Ref.	Part No.	Serial Number	Description	Qty.
▽	1	1045940	(003039–005999)	Radiator, W/ Hyd Cooler [Side X Side]	1
▲	2	1045764	(003039–005999)	Cap, Radiator, 14Psi [Stant]	1
	3	1037346	(003039–005999)	Screw, Hex, M8 X 1.25 X 25, 9.8, Sems	4
	4	9006811	(003039–005999)	Shrd Wldt,Fan,G/Lp, Replmt [M20/M30/T20]	1
	4	9006813	(003039–005999)	Shrd Wldt,Fan,G/Lp, Replmt [TJ] (Japan Only)	1
	5	1045433	(003039–005999)	Bracket, Cover	1
	6	1036892	(003039–005999)	Screw, Hex, M6 X 1.00 X 25, 9.8 Sems	2
	7	1046962	(003039–005999)	Bracket, Mtg, Radiator	1
	8	06962	(003039–005999)	Screw, Hex, M10 X 1.50 X 45, 8.8	4
	9	32492	(003039–005999)	Washer, Flat, 0.38, Std	8
	10	54274	(003039–005999)	Isolator, Vib, Bshg, 1.1d 0.6l .4b 0.78h	4
	11	09832	(003039–005999)	Washer, Flat, 0.81b 1.06d .06, Stl	8
	12	1014563	(003039–005999)	Washer, Flat, 0.40b 1.12d .12, Ss	6
	13	41430	(003039–005999)	Nut, Hex, Lock, M10 X 1.5, Nl	4
	14	39277	(003039–005999)	Screw, Hex, M8 X 1.25 X 25, 8.8	4
	15	32491	(003039–005999)	Washer, Flat, 0.31, Std	12
	16	1043897	(003039–005999)	Bracket, Skirt, Rbr	1
	17	32483	(003039–005999)	Washer, Flat, 0.25, Sae	2
	18	32490	(003039–005999)	Washer, Flat, 0.25, Std	2
	19	1052170	(003039–005999)	Skirt, Eng Fan, Gas / Lp	1
	20	361339	(003039–005999)	Screw, Hex, M6 X 1.00 X 16, Fmg	2
	21	1037355	(003039–005999)	Screw, Hex, M8 X 1.25 X 35, 9.8, Sems	2
	22	41178	(003039–005999)	Washer, Flat, 0.25, Fendr	3
	23	1036892	(003039–005999)	Screw, Hex, M6 X 1.00 X 25, 9.8 Sems	3
	24	49266	(003039–005999)	Tie, Cable, Nyl, 07.3l .19w 1.8 Max D	1
	25	1019968	(003039–005999)	Bracket, Mtg, Radiator	1
	26	1040467	(003039–005999)	Screw, Hex, M6 X 1.00 X 20, 9.8, Sems	4
	27	30407	(003039–005999)	Clip, Keeper, Open	1
	28	08708	(003039–005999)	Nut, Hex, Lock, M6 X 1.00, Nl	1
	29	1046039	(003039–005999)	Shroud Wldt, Fan, 16.25d [Side X Side]	1
	30	08165	(003039–005999)	Nut, Hex, Stover, M8 X 1.25	1
	31	1045419	(003039–005999)	Bracket, Fan, Rh	1
	32	1045530	(003039–005999)	Bracket Wldt, Mtg, Fan, Upper	1
	33	1045415	(003039–005999)	Bracket, Fan, Lh	1
	34	1045447	(003039–005999)	Bracket, Fan, Upper, Lh	1
	35	16931	(003039–005999)	Screw, Hex, M8 X 1.25 X 20, 8.8	9
	36	39283	(003039–005999)	Screw, Hex, M10 X 1.50 X 25, 8.8	2
	37	07790	(003039–005999)	Nut, Hex, Flng, M6 X 1.00	1

Fig. 28 – GM Engine Radiator Hose Group (003039–005999)

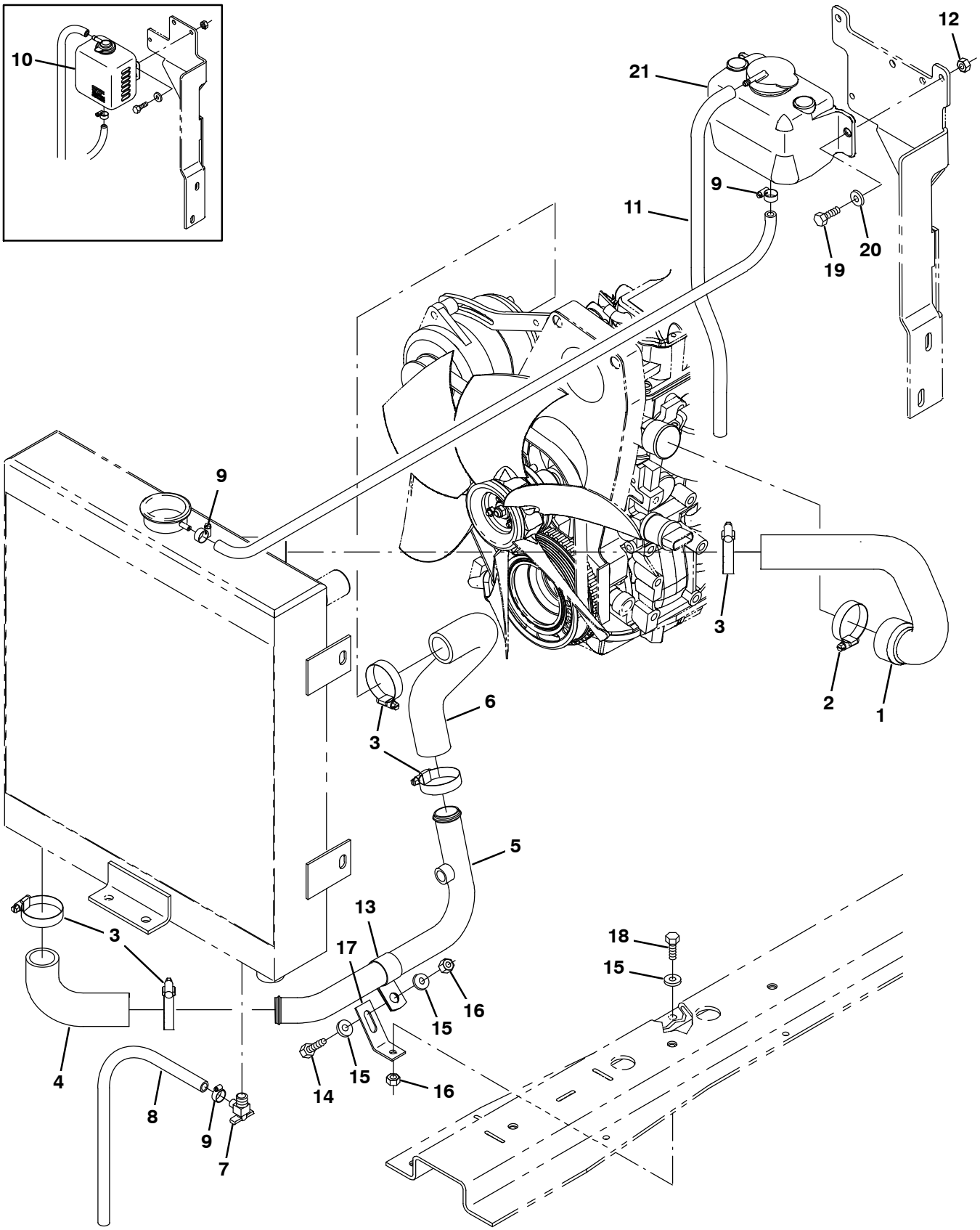

356021

Fig. 28 - GM Engine Radiator Hose Group (003039-005999)

Ref.	Part No.	Serial Number	Description	Qty.
1	1014747	(003039-005999)	Hose, Coolant, Mold, 1.125id To 1.50id	1
2	22297	(003039-005999)	Clamp, Hose, Wormdrive, 1.56-2.50d, .50w	1
3	79381	(003039-005999)	Clamp, Hose, Wormdrive, 1.25-2.00d, .50w	5
4	1007482	(003039-005999)	Hose, Rbr, E90, 1.25id 1.25id	1
5	1043322	(003039-005999)	Tube, Coolant, 1.3d, Lower	1
6	1019265	(003039-005999)	Hose, Radiator, Lower, Mold	1
7	51305	(003039-005999)	Fitting, Draincock, E90, .25npt	1
8	73471	(003039-005999)	Hose, Pvc, Clr, 0.38id 0.56od 022.0l	1
9	43844	(003039-005999)	Clamp, Hose, Wormdrive, 0.25-0.62d, .31w	3
10	1023853	(003039-003122)	Tank, Coolant, 03.30w 4.7hi 04.7l,1liter	1
11	1015041	(003039-003122)	Hose, Afmkt, Coolant Recvy, 05ft	1
11	87738	(003123-005999)	Hose, Fuel, 0.18id, 29.0l	1
12	08709	(003039-005999)	Nut, Hex, Lock, M8 X 1.25, Nl	2
13	58366	(003039-005999)	Clamp, Cable, Stl, 1.25d X 1.00w, 1hole	1
14	09010	(003039-005999)	Screw, Hex, M8 X 1.25 X 25, Ss	1
15	01685	(003039-005999)	Washer, Flat, 0.38b 0.88d .08, Ss	3
16	08713	(003039-005999)	Nut, Hex, Lock, M8 X 1.25, Nl, Ss	2
17	1035214	(003039-005999)	Bracket, Tube, Coolant	1
18	09740	(003039-005999)	Screw, Hex, M8 X 1.25 X 20, Ss	1
19	16931	(003039-005999)	Screw, Hex, M8 X 1.25 X 20, 8.8	2
20	32491	(003039-005999)	Washer, Flat, 0.31, Std	2
21	1054382	(003123-005999)	Tank, Coolant, 03.6w 04.1hi 05.5l,1liter	1

Fig. 29 – Mitsubishi Engine and Mount Group, Gas (006000–)

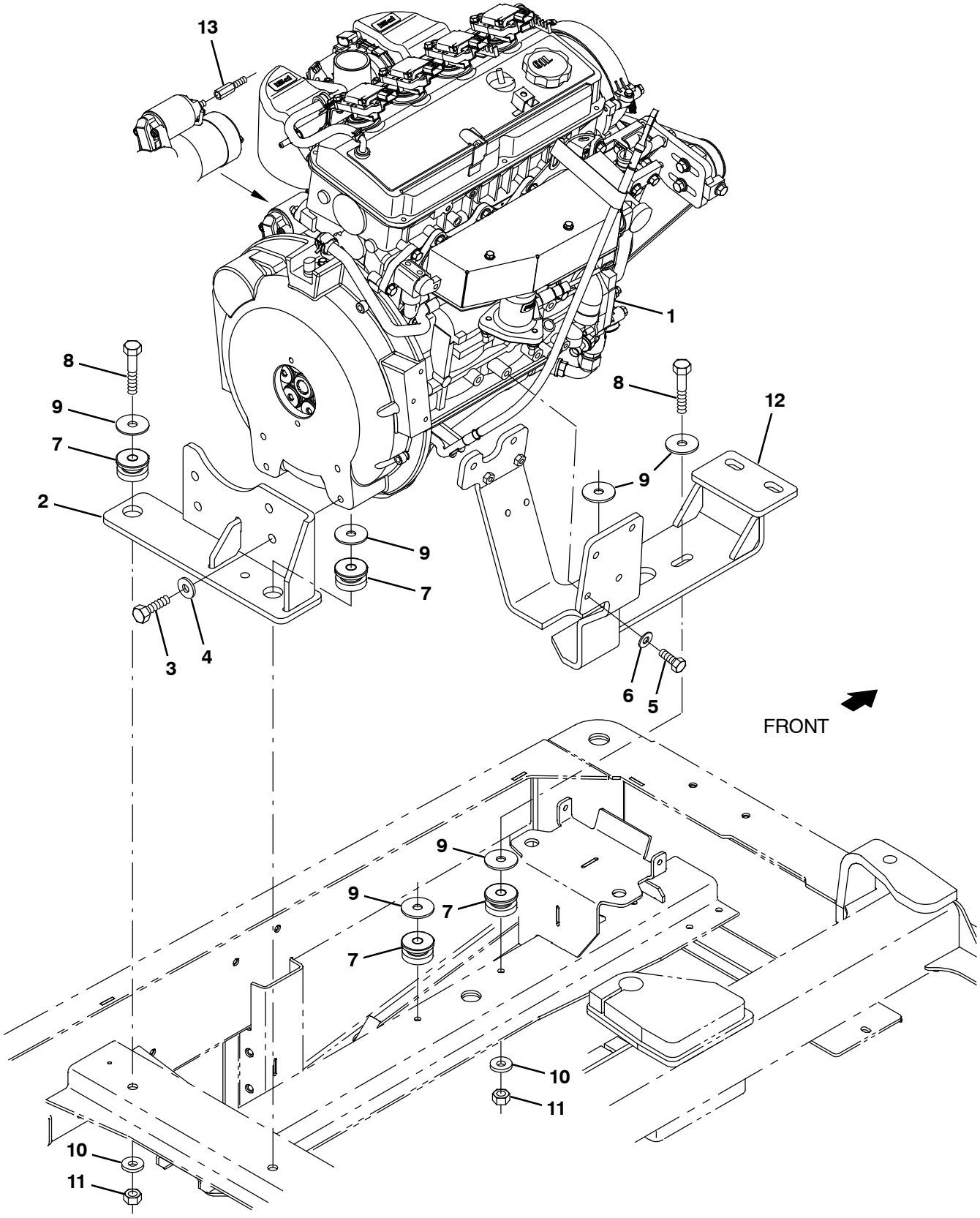

356291

Fig. 29 – Mitsubishi Engine and Mount Group, Gas (006000–)

	Ref.	Part No.	Serial Number	Description	Qty.
▽	1	1071155	(006000–007114)	Engine, Gas [Mitsubishi] (See Engine Breakdown)	1
▲		393982	(006000–)	Element, Fltr, Oil, Spin–On (Mits)	1
▽	1	9014202	(007115–)	Engine, Block, Long [Mits 12mm] (See Engine Breakdown)	1
▲		393982	(006000–)	Element, Fltr, Oil, Spin–On (Mits)	1
	2	1070756	(006000–)	Bracket Wldt, Mtg, Eng, Rear [Mit 2013]	1
	3	06968	(006000–)	Screw, Hex, M12 X 1.75 X 35, 8.8	4
	4	32486	(006000–)	Washer, Flat, 0.50 Sae	4
	5	07299	(006000–)	Screw, Hex, M10 X 1.25 X 25, 8.8	6
	6	32485	(006000–)	Washer, Flat, 0.38 Sae	6
	7	51176	(006000–)	Isolator, Vib, .50d	4
	8	06972	(006000–)	Screw, Hex, M12 X 1.75 X 60, 8.8	4
	9	04414	(006000–)	Washer, Flat, 0.53b 1.88d .12, Stl, Pl	4
	10	32493	(006000–)	Washer, Flat, 0.50 Std	3
	11	08711	(006000–)	Nut, Hex, Lock, M12 X 1.75,Nl	3
	12	1070751	(006000–)	Bracket Wldt, Mtg, Engine [Mit 2013]	1
	13	1072669	(006000–)	Stand–Off, Hex, M8 X M8, Metal	1

Fig. 30 – Mitsubishi Engine and Mount Group, LPG (006000–)

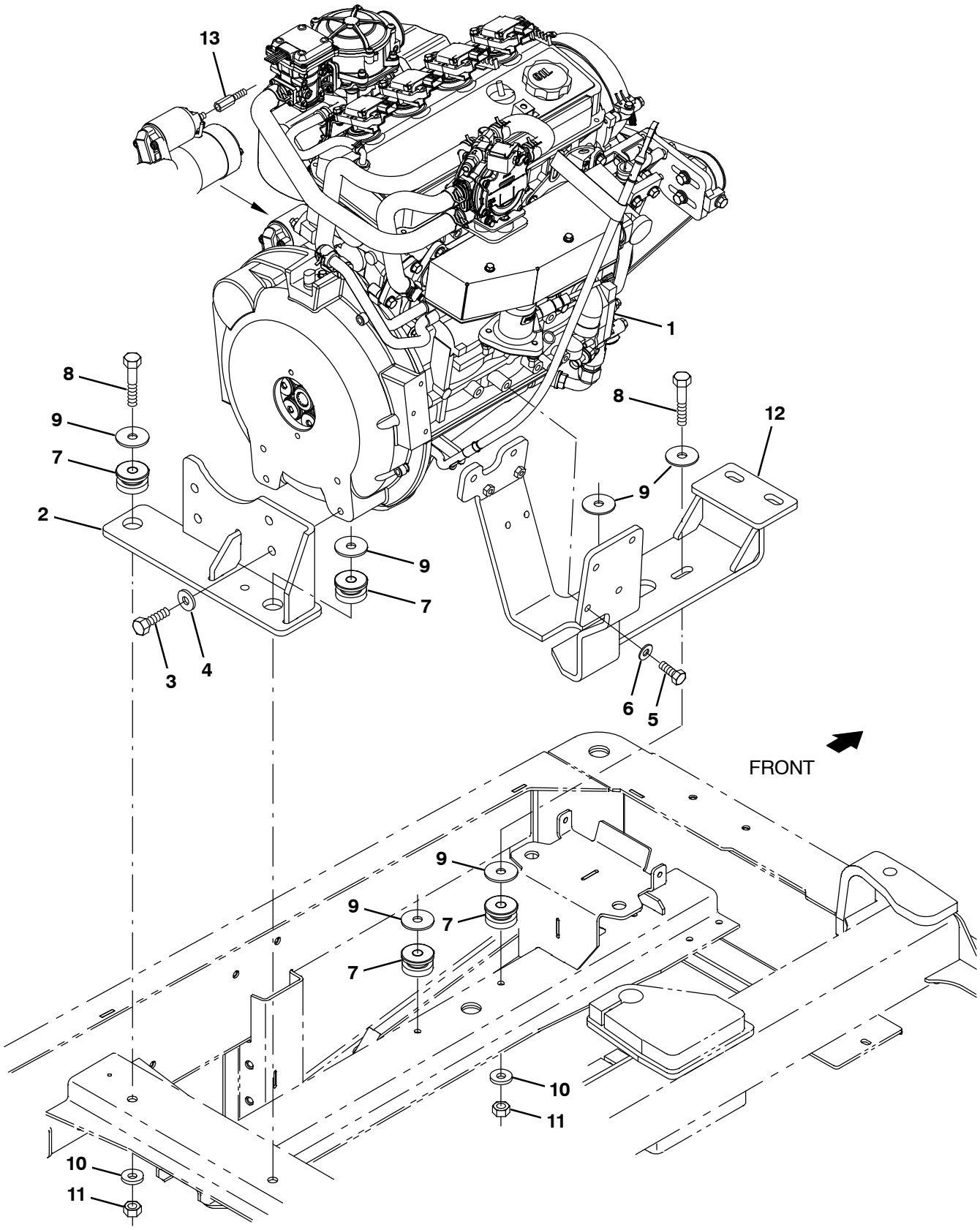

356292

Fig. 30 – Mitsubishi Engine and Mount Group, LPG (006000–)

	Ref.	Part No.	Serial Number	Description	Qty.
▽	1	1070348	(006000–007114)	Engine, LPG [Mitsubishi] (See Engine Breakdown)	1
▲		393982	(006000–)	Element, Fltr, Oil, Spin–On (Mits)	1
▽	1	9014202	(007115–)	Engine, Block, Long [Mits 12mm] (See Engine Breakdown)	1
▲		393982	(006000–)	Element, Fltr, Oil, Spin–On (Mits)	1
	2	1070756	(006000–)	Bracket Wldt, Mtg, Eng, Rear [Mit 2013]	1
	3	06968	(006000–)	Screw, Hex, M12 X 1.75 X 35, 8.8	4
	4	32486	(006000–)	Washer, Flat, 0.50 Sae	4
	5	07299	(006000–)	Screw, Hex, M10 X 1.25 X 25, 8.8	6
	6	32485	(006000–)	Washer, Flat, 0.38 Sae	6
	7	51176	(006000–)	Isolator, Vib, .50d	4
	8	06972	(006000–)	Screw, Hex, M12 X 1.75 X 60, 8.8	4
	9	04414	(006000–)	Washer, Flat, 0.53b 1.88d .12, Stl, Pl	4
	10	32493	(006000–)	Washer, Flat, 0.50 Std	3
	11	08711	(006000–)	Nut, Hex, Lock, M12 X 1.75,Nl	3
	12	1070751	(006000–)	Bracket Wldt, Mtg, Engine [Mit 2013]	1
	13	1072669	(006000–)	Stand–Off, Hex, M8 X M8, Metal	1

Fig. 31 – Mitsubishi Engine EFI Group, Gasoline (006000–)

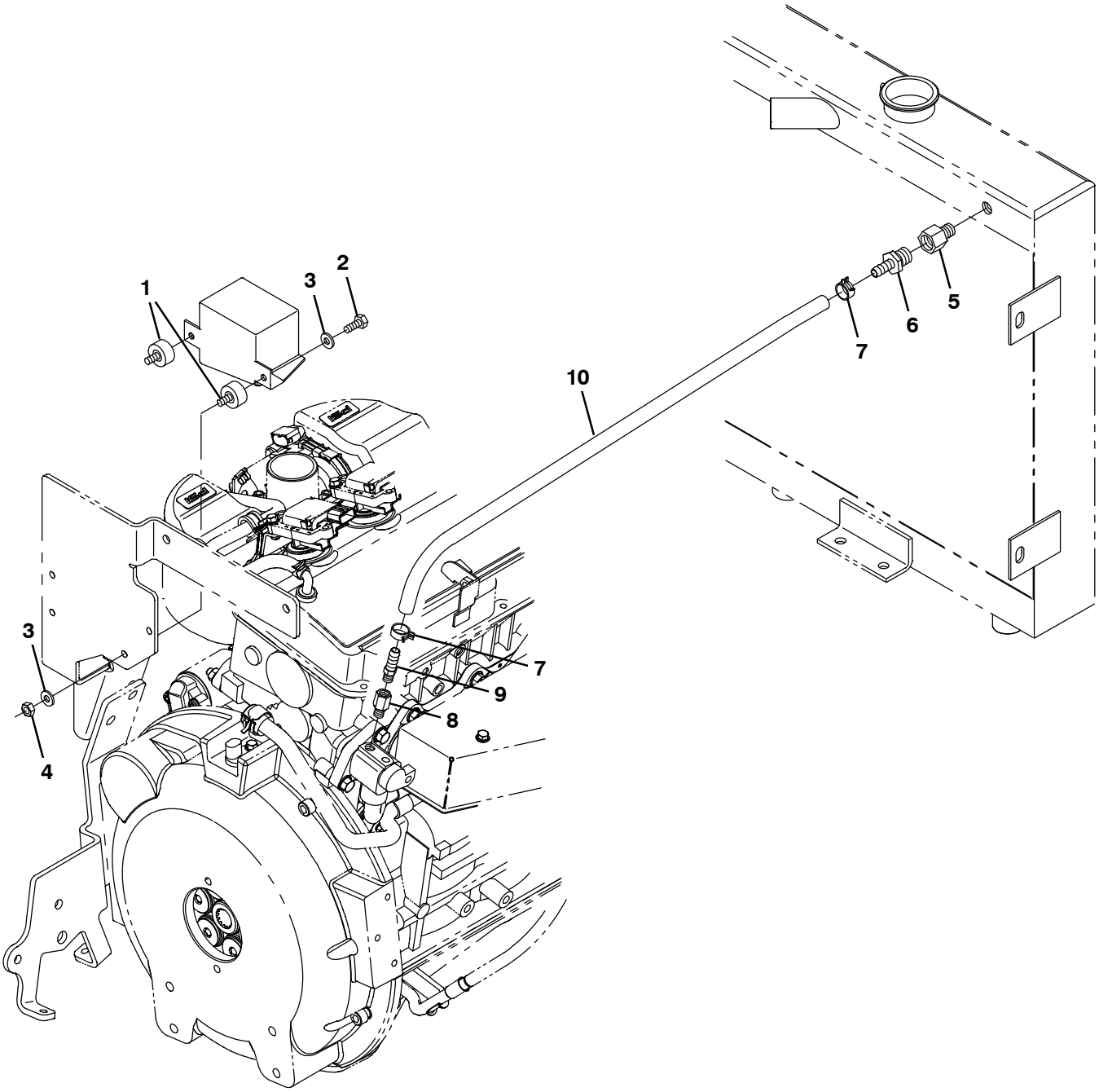

356293

Fig. 31 – Mitsubishi Engine EFI Group, Gasoline (006000–)

Ref.	Part No.	Serial Number	Description	Qty.
1	372470	(006000–)	Isolator, Box, Relay	2
2	19315	(006000–)	Screw, Hex, .25–20 X 0.50, G5	2
3	32490	(006000–)	Washer, Flat, 0.25, Std	4
4	19312	(006000–)	Nut, Hex, Std, .25–20	2
5	1071440	(006000–)	Fitting, Brs, Str, Pf06/Pm04	1
6	36159	(006000–)	Fitting, Brs, Str, Bm06/Pm06	1
7	1072559	(006000–)	Clamp, Hose, Spring Stl, 0.58d X 0.31w	2
8	1071502	(006000–)	Fitting, Brs, Str, Pf02/Pm02 [Bspt]	1
9	1055552	(006000–)	Fitting, Brs, Str, Bm06/Pm02	1
10	1072408	(006000–)	Hose, Afmkt, Rbr, Heater, 0.38id, 03ft	1

Fig. 32 – Mitsubishi Engine EFI Group, LPG (006000–)

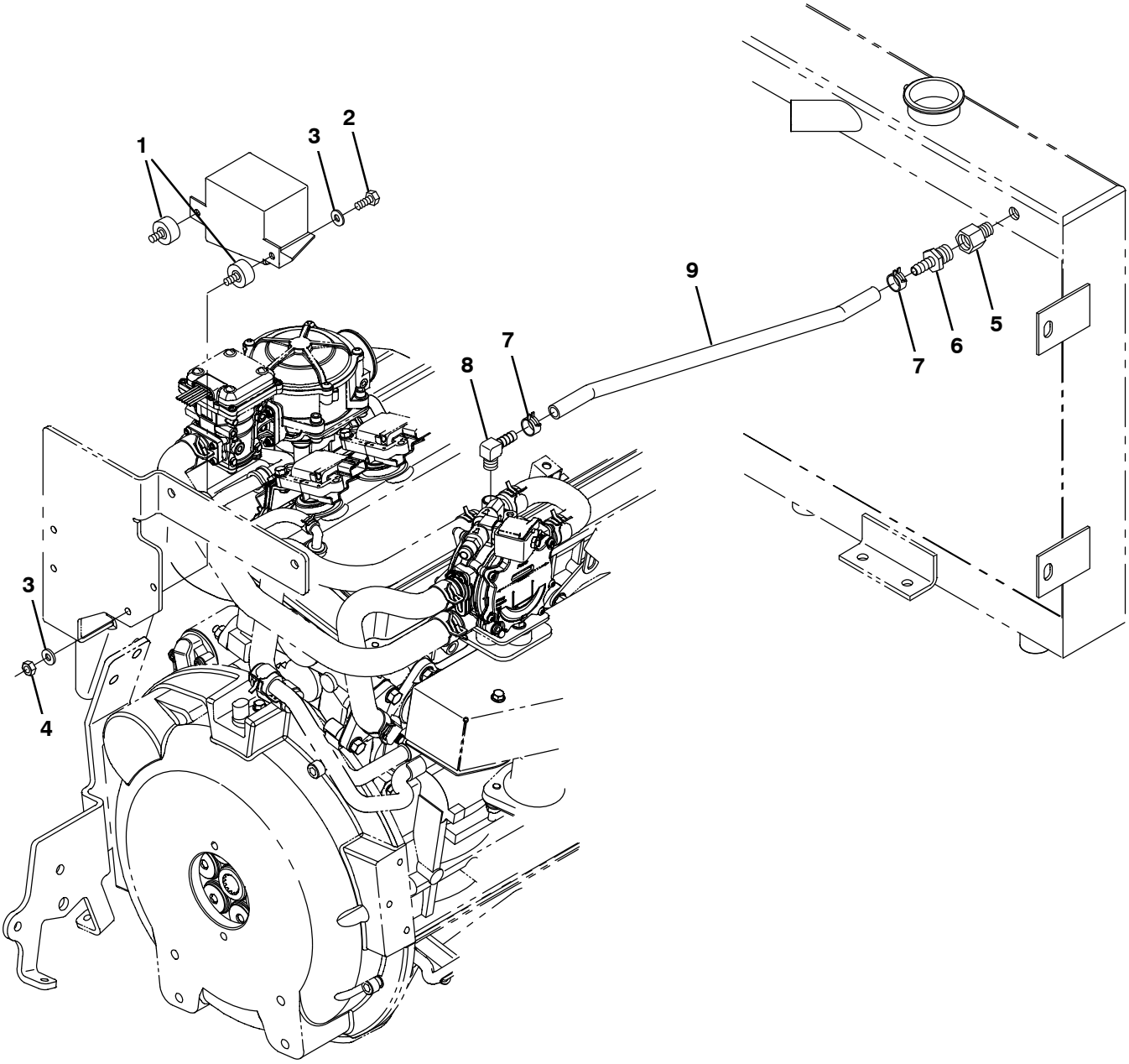

356294

Fig. 32 – Mitsubishi Engine EFI Group, LPG (006000–)

Ref.	Part No.	Serial Number	Description	Qty.
1	372470	(006000–)	Isolator, Box, Relay	2
2	19315	(006000–)	Screw, Hex, .25–20 X 0.50, G5	2
3	32490	(006000–)	Washer, Flat, 0.25, Std	4
4	19312	(006000–)	Nut, Hex, Std, .25–20	2
5	1071440	(006000–)	Fitting, Brs, Str, Pf06/Pm04	1
6	36159	(006000–)	Fitting, Brs, Str, Bm06/Pm06	1
7	1072559	(006000–)	Clamp, Hose, Spring Stl, 0.58d X 0.31w	2
8	1015815	(006000–)	Fitting, Brs, E90, Bm06/Pm04	1
9	1072408	(006000–)	Hose, Afmkt, Rbr, Heater, 0.38id, 03ft	1

Fig. 33 – Mitsubishi Engine Air Cleaner Group, Gasoline (006000–)

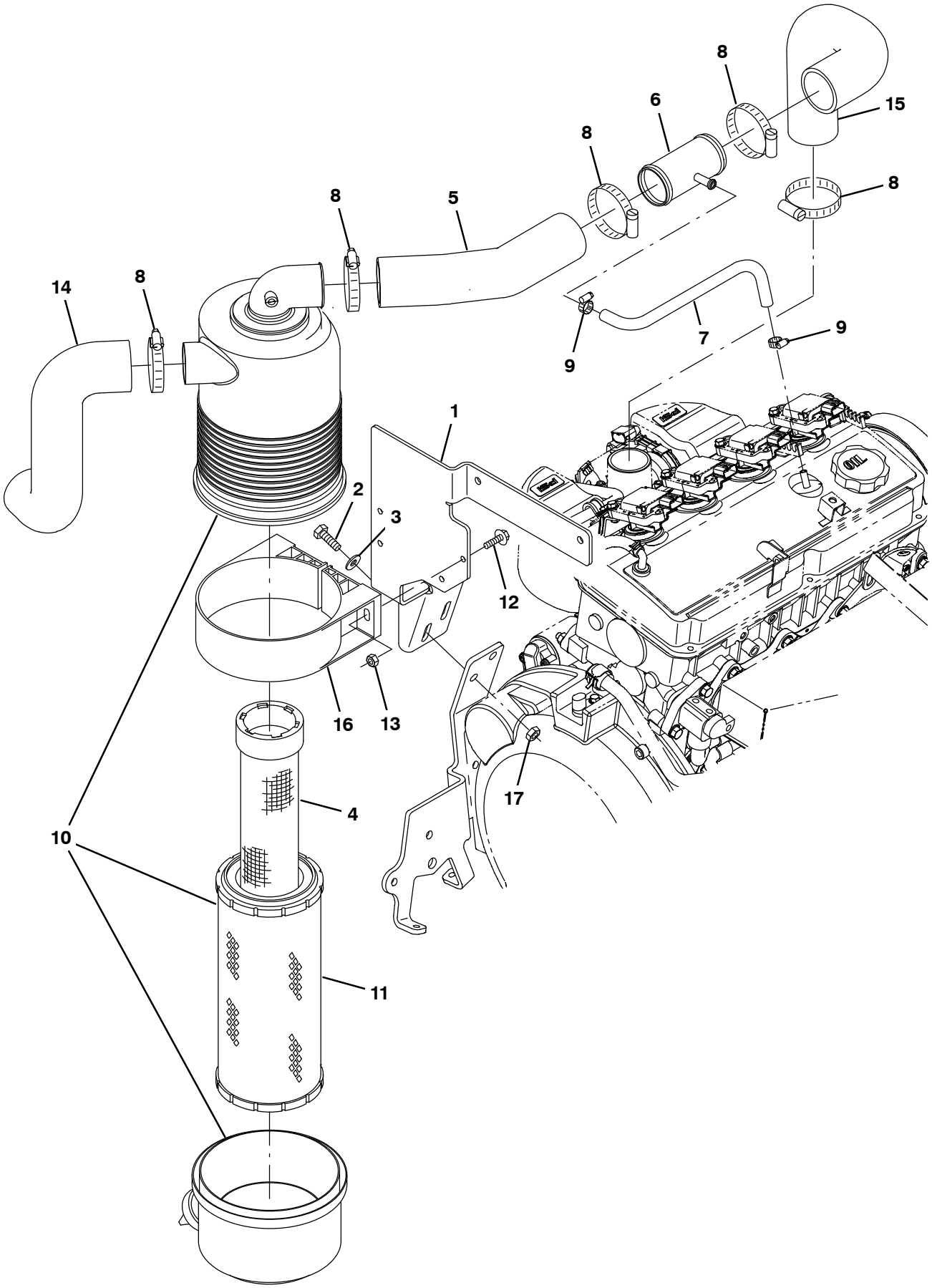

356295 – NA

Fig. 33 – Mitsubishi Engine Air Cleaner Group, Gasoline (006000–)

	Ref.	Part No.	Serial Number	Description	Qty.
	1	1070822	(006000–)	Bracket, Mtg, Fltr, Air [Mit 2013]	1
	2	39277	(006000–)	Screw, Hex, M8 X 1.25 X 25, 8.8	2
	3	32491	(006000–)	Washer, Flat, 0.31, Std	2
	4	398279	(006000–)	Element, Fltr, Air, Safety (OPTION)	1
	5	1070788	(006000–)	Hose, Intake, Mold [Epdm Mit 2013]	1
	6	1070833	(006000–)	Tube Wldt, Tee [Mit 2013]	1
	7	381391	(006000–)	Hose, Drain,Overflow,Radiator[1pick=1ft]	1
	8	14432	(006000–)	Clamp, Hose, Wormdrive, 1.81–2.75d, .50w	5
	9	54333	(006000–)	Clamp, Hose, Wormdrive, 0.31–0.88d, .31w	2
▽	10	369745	(006000–)	Filter Assy, Air	1
▲	11	369746	(006000–)	Element, Fltr, Air [Dn]	1
	12	1036892	(006000–)	Screw, Hex, M6 X 1.00 X 25, 9.8 Sems	2
	13	08708	(006000–)	Nut, Hex, Lock, M6 X 1.00, Nl	2
	14	1020949	(006000–)	Hose, Intake, Mold, 2.00id [Epdm]	1
	15	1071404	(006000–)	Hose, Intake, Mold, Gas [Epdm Mit 2013]	1
	16	369747	(006000–)	Clamp, Mtg, Fltr, Air	1
	17	08709	(006000–)	Nut, Hex, Lock, M8 X 1.25, Nl	2

Fig. 34 – Mitsubishi Engine Air Cleaner Group, LPG (006000–)

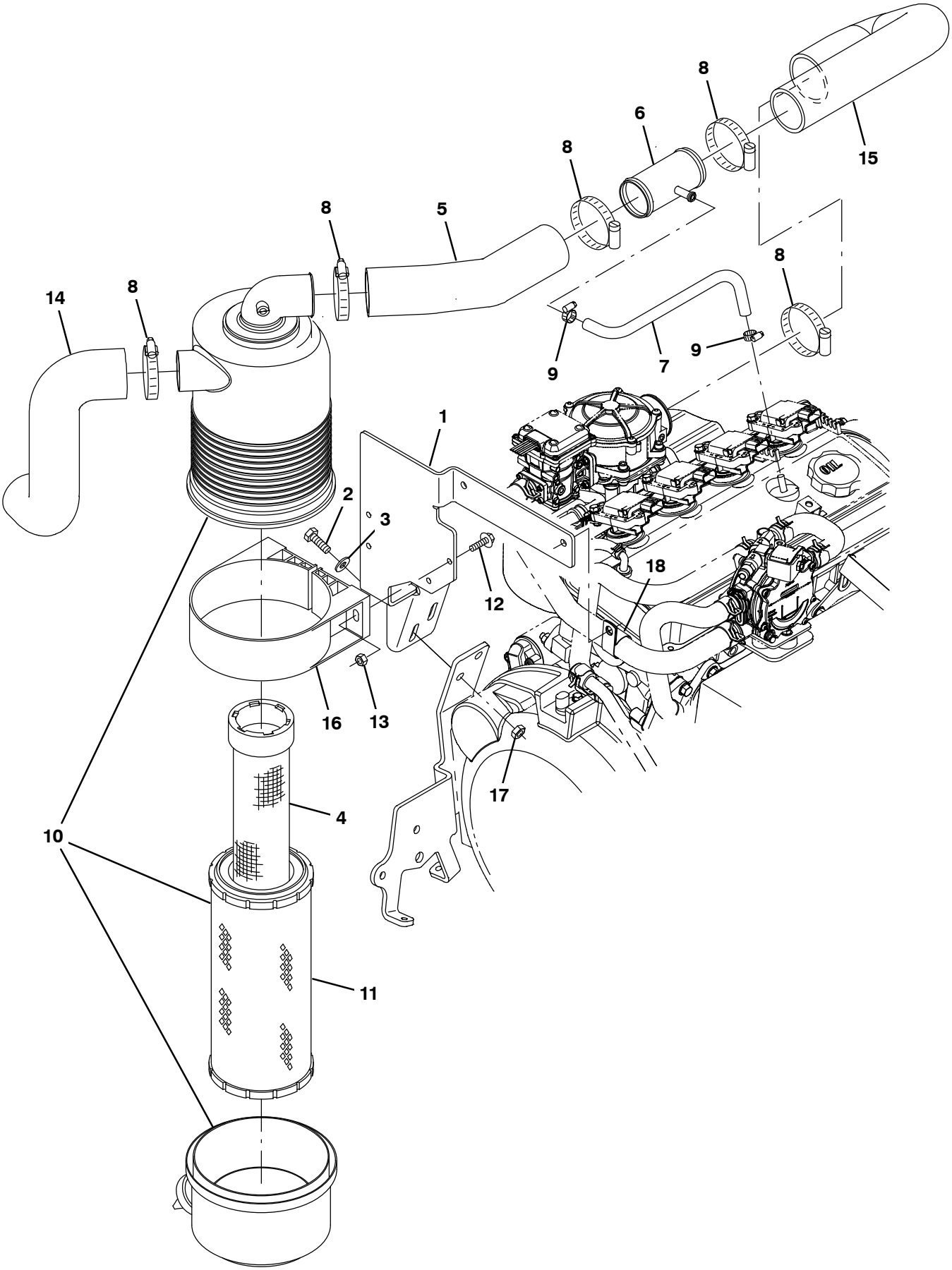

356296 – NA

Fig. 34 – Mitsubishi Engine Air Cleaner Group, LPG (006000–)

	Ref.	Part No.	Serial Number	Description	Qty.
	1	1070822	(006000–)	Bracket, Mtg, Fltr, Air [Mit 2013]	1
	2	39277	(006000–)	Screw, Hex, M8 X 1.25 X 25, 8.8	2
	3	32491	(006000–)	Washer, Flat, 0.31, Std	2
	4	398279	(006000–)	Element, Fltr, Air, Safety (OPTION)	1
	5	1070788	(006000–)	Hose, Intake, Mold [Epdm Mit 2013]	1
	6	1070833	(006000–)	Tube Wldt, Tee [Mit 2013]	1
	7	381391	(006000–)	Hose, Drain,Overflow,Radiator[1pick=1ft]	1
	8	14432	(006000–)	Clamp, Hose, Wormdrive, 1.81–2.75d, .50w	5
	9	54333	(006000–)	Clamp, Hose, Wormdrive, 0.31–0.88d, .31w	2
▽	10	369745	(006000–)	Filter Assy, Air	1
▲	11	369746	(006000–)	Element, Fltr, Air [Dn]	1
	12	1036892	(006000–)	Screw, Hex, M6 X 1.00 X 25, 9.8 Sems	2
	13	08708	(006000–)	Nut, Hex, Lock, M6 X 1.00, Nl	2
	14	1020949	(006000–)	Hose, Intake, Mold, 2.00id [Epdm]	1
	15	1070787	(006000–)	Hose, Intake, Mold, Lpg [Epdm Mit2013]	1
	16	369747	(006000–)	Clamp, Mtg, Fltr, Air	1
	17	08709	(006000–)	Nut, Hex, Lock, M8 X 1.25, Nl	2
	18	69234	(006000–)	Clamp, Cable, Stl, 1.00d X 0.75w, 1hole	1

Fig. 35 – Mitsubishi Engine Alternator and Fan Group (006000–)

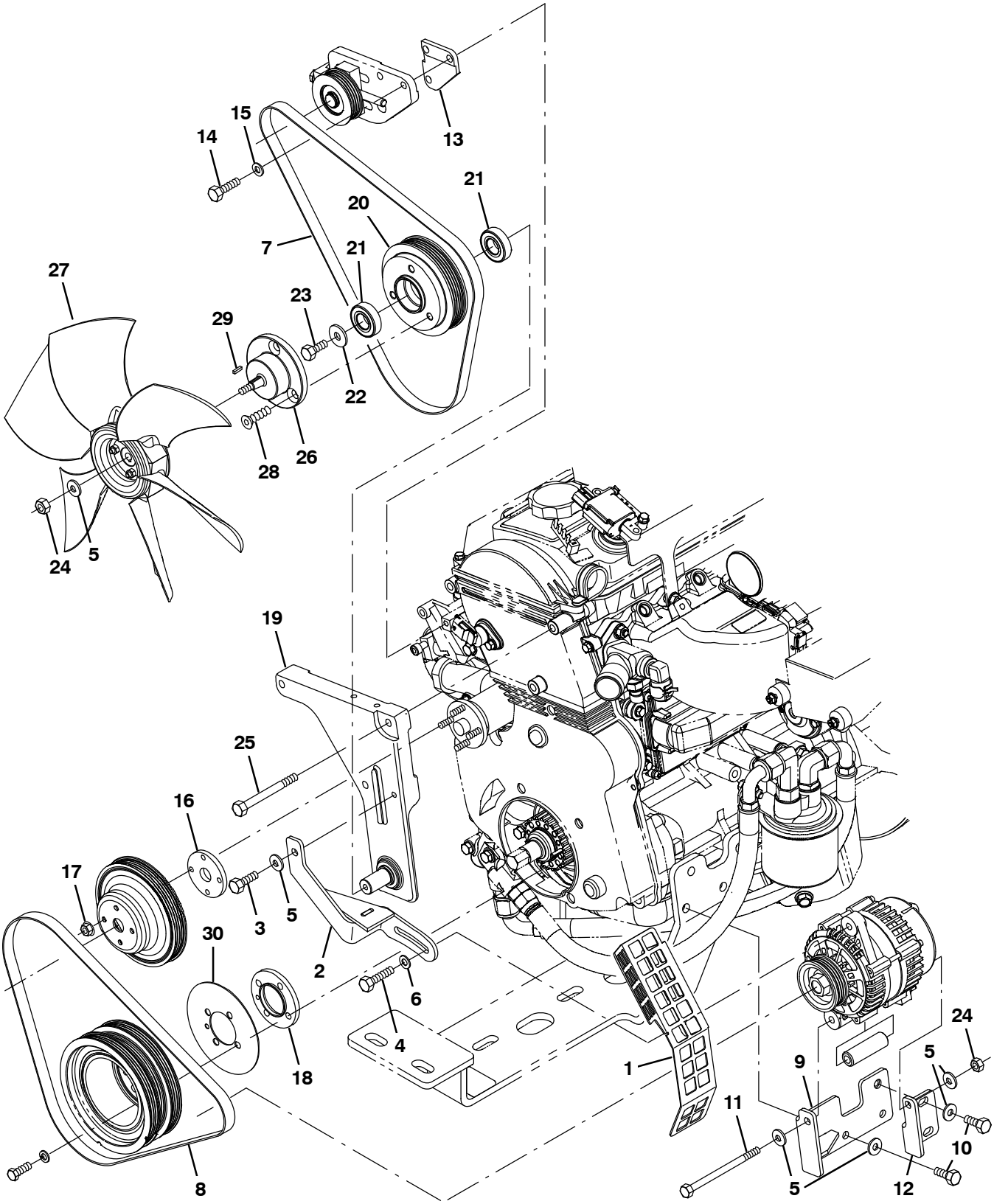

356297

Fig. 35 – Mitsubishi Engine Alternator and Fan Group (006000–)

Ref.	Part No.	Serial Number	Description	Qty.
1	1071727	(006000–)	Guard, Fan, Side	1
2	1070890	(006000–)	Arm Wldt, Alternator [Mit 2013]	1
3	16931	(006000–)	Screw, Hex, M8 X 1.25 X 20, 8.8	1
4	04375	(006000–)	Screw, Hex, M8 X 1.25 X 40, 8.8, Fl	1
5	32491	(006000–)	Washer, Flat, 0.31, Std	7
6	41186	(006000–)	Washer, Flat, Belleville, .31	1
7	1071144	(006000–)	Belt, Ribbed, Fan, 42.13l	1
8	1071145	(006000–)	Belt, Ribbed, Alternator, 41.5l	1
9	1070764	(006000–)	Bracket Wldt, Alternator [Mit13]	1
10	39277	(006000–)	Screw, Hex, M8 X 1.25 X 25, 8.8	3
11	49883	(006000–)	Screw, Hex, M8 X 1.25 X 120, 8.8, Fl	1
12	1070619	(006000–)	Bracket, Mtg, Alternator [Mit 2013]	1
13	1071107	(006000–)	Block, Spacer	1
14	76570	(006000–)	Screw, Hex, M8 X 1.25 X 30, 8.8	2
15	39349	(006000–)	Washer, Flat, 0.31, Sae	2
16	1071108	(006000–)	Spacer, Pump, Water	1
17	07790	(006000–)	Nut, Hex, Flng, M6 X 1.00	4
18	1071110	(006000–)	Spacer, Crankfshaft	1
19	1073529	(006000–)	Plate Wldt, Shaft, Fan [Shaft Extended]	1
20	1070426	(006000–)	Sheave, Mach [Mit 2615rpm Fan]	1
21	1055377	(006000–)	Bearing, Ball, 20mm B 42mm D 12mm W	2
22	1017218	(006000–)	Washer, Flat, 0.32b 1.00d .12, Ss	1
23	16735	(006000–)	Screw, Hex, M8 X 1.25 X 16, 8.8	1
24	08709	(006000–)	Nut, Hex, Lock, M8 X 1.25, Nl	2
25	39281	(006000–)	Screw, Hex, M8 X 1.25 X 90, 8.8	3
26	1070431	(006000–)	Spacer, Fan, Taper [Mit 2013]	1
27	1031566	(006000–)	Fan, Cooling, 14.1d, 6 Blade, 0.5b Taper	1
28	48998	(006000–)	Screw, Flt, Soc, .38–16 X 1.00, Al	3
29	00960	(006000–)	Key, Sq, 0.12 X 0.12, 0.50l	1
30	1072421	(006000–)	Plate, Shield, Dust	1

Fig. 36 – Mitsubishi Engine Muffler Group (006000–)

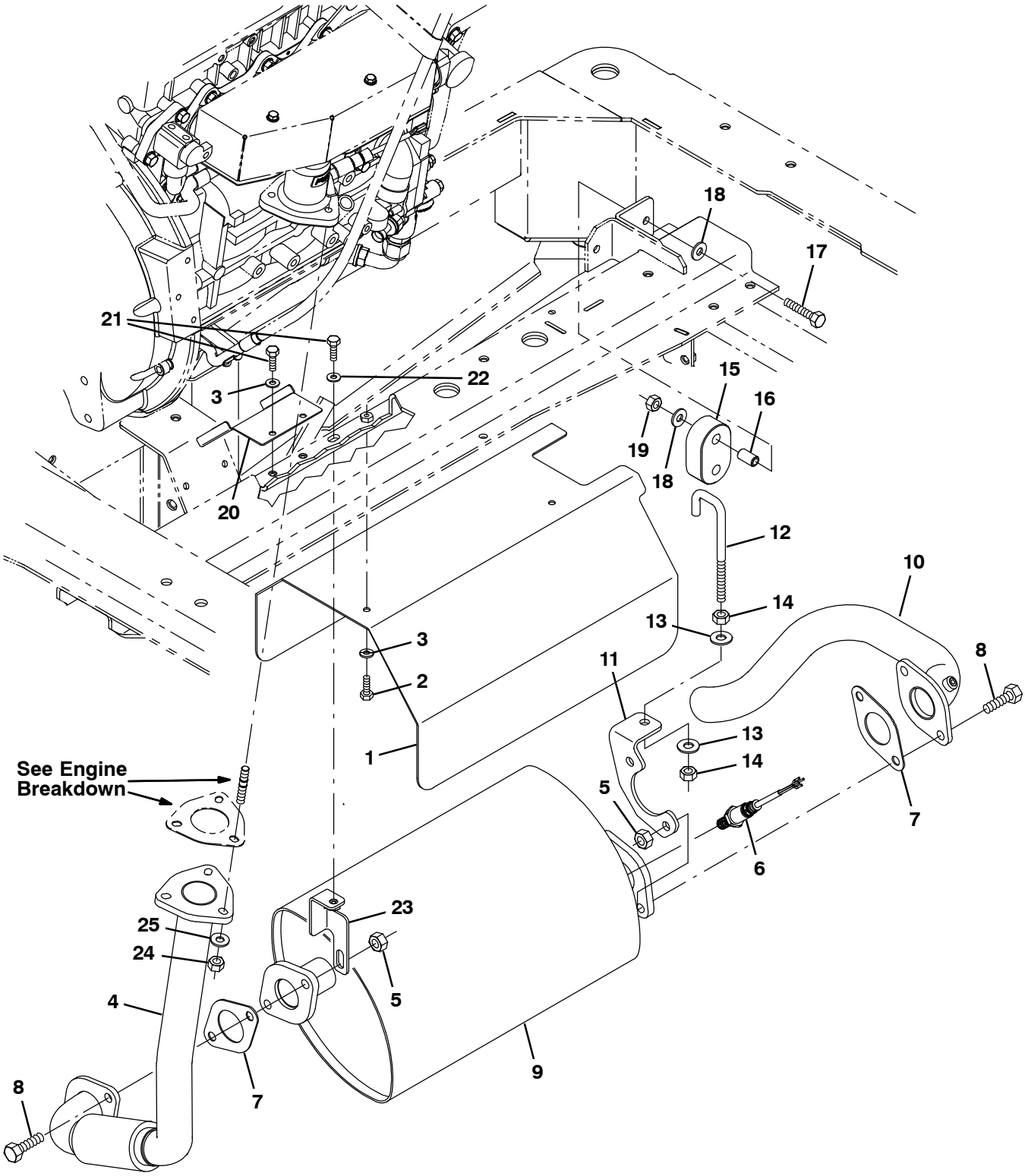

356298

Fig. 36 – Mitsubishi Engine Muffler Group (006000–)

Ref.	Part No.	Serial Number	Description	Qty.
1	1028994	(006000–)	Channel, Shield, Muffler [M20/T20 2007]	1
2	08716	(006000–)	Screw, Hex, M6 X 1.0 X 20, Ss	2
3	32483	(006000–)	Washer, Flat, 0.25, Sae	4
4	9013159	(006000–)	Pipe Kit, Exhaust, Replmt [Mako Mitsu]	1
5	08166	(006000–)	Nut, Hex, M10 X 1.50 [Stover]	4
6	1028558	(006000–)	Sensor, Exhaust, Tailpipe	1
7	1011216	(006000–)	Gasket, Exhaust, 2hole, 3.4bc	2
8	39284	(006000–)	Screw, Hex, M10 X 1.5 X 35, 8.8	4
9	1071376	(006000–)	Muffler, Catalytic [Mit 2.0l 2013]	1
10	1028753	(006000–)	Tube, Exhaust, Flng, 1.5d [M20/T20 2007]	1
11	1028929	(006000–)	Bracket, Mtg, Muffler [M20/T20 2007]	1
12	1013117	(006000–)	Rod, Hanger, Isolator	1
13	32492	(006000–)	Washer, Flat, 0.38, Std	2
14	25014	(006000–)	Nut, Hex, Std, .38–16	2
15	1013031	(006000–)	Isolator, Rbr	1
16	222496	(006000–)	Sleeve, P/M, 0.31b 0.50d 0.9l [430ss]	1
17	222505	(006000–)	Screw, Hex, M8 X 1.25 X 45, Ss	1
18	01685	(006000–)	Washer, Flat, 0.38b 0.88d .08, Ss	2
19	08713	(006000–)	Nut, Hex, Lock, M8 X 1.25, Nl, Ss	1
20	1071418	(006000–)	Shield, Tray, Drip [Mit 2013]	1
21	06943	(006000–)	Screw, Hex, M6 X 1.00 X 20, 8.8	3
22	32490	(006000–)	Washer, Flat, 0.25, Std	1
23	1071113	(006000–)	Bracket, Muffler	1
24	08165	(006000–)	Nut, Hex, Stover, M8	3
25	39349	(006000–)	Washer, Flat, 0.31, Sae	3

Fig. 37 – Mitsubishi Engine Radiator and Mount Group (006000–)

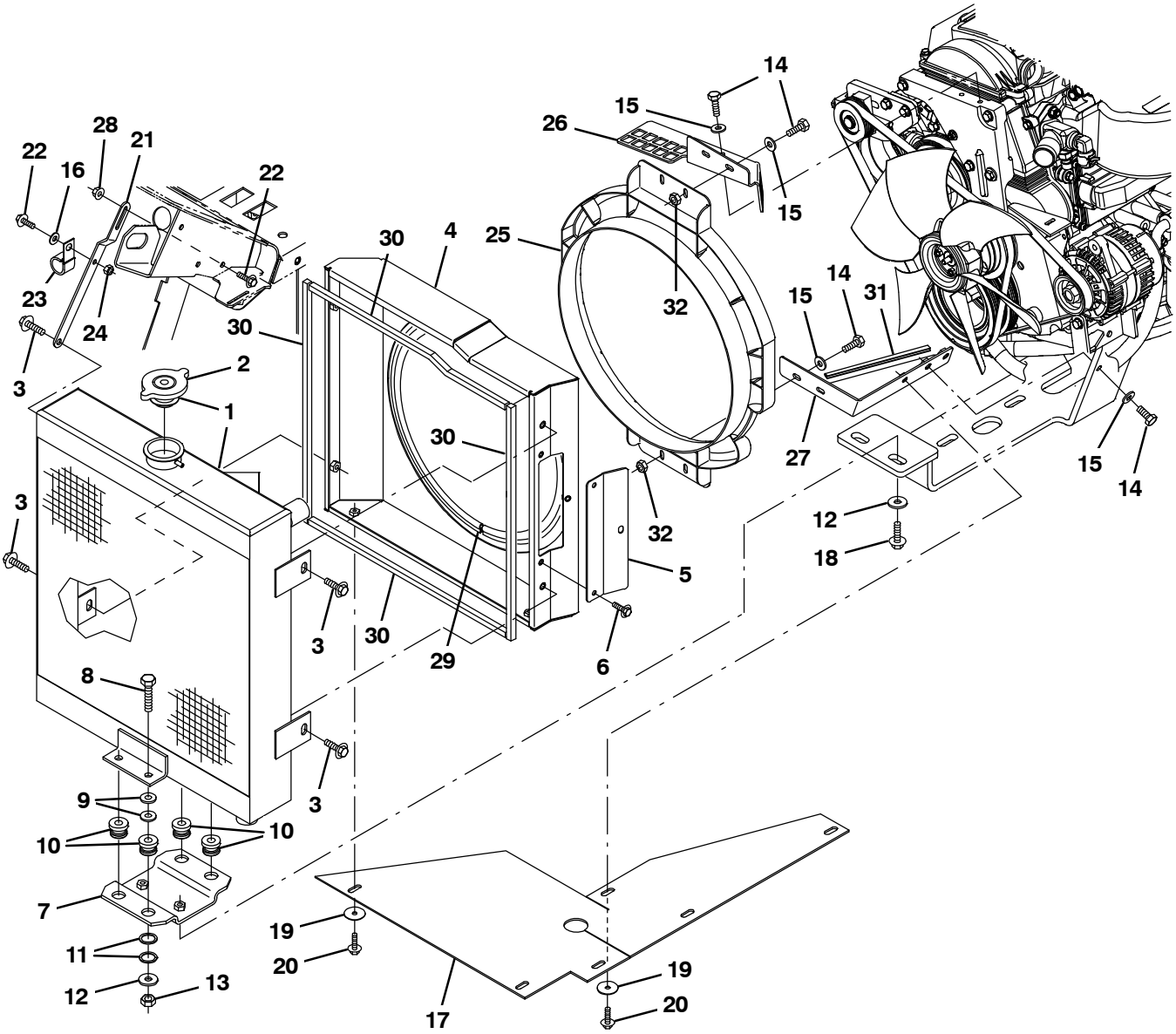

356299

Fig. 37 – Mitsubishi Engine Radiator and Mount Group (006000–)

	Ref.	Part No.	Serial Number	Description	Qty.
▽	1	1045940	(006000–)	Radiator, W/ Hyd Cooler [Side X Side]	1
▲	2	1045764	(006000–)	Cap, Radiator, 14Psi [Stant]	1
	3	1037346	(006000–)	Screw, Hex, M8 X 1.25 X 25, 9.8, Sems	4
	4	9010096	(006000–)	Shrd Wldt,Fan,G/Lp, Replmt [M20/M30/T20]	1
	4	9010097	(006000–)	Shrd Wldt,Fan,G/Lp, Replmt [TJ] (Japan Only)	1
	5	1070955	(006000–)	Plate, Door, Clean–Out [Mit2013]	1
	6	1036892	(006000–)	Screw, Hex, M6 X 1.00 X 25, 9.8 Sems	3
	7	1046962	(006000–)	Bracket, Mtg, Radiator	1
	8	06962	(006000–)	Screw, Hex, M10 X 1.50 X 45, 8.8	4
	9	32492	(006000–)	Washer, Flat, 0.38, Std	8
	10	54274	(006000–)	Isolator, Vib, Bshg, 1.1d 0.6l .4b 0.78h	4
	11	09832	(006000–)	Washer, Flat, 0.81b 1.06d .06, Stl	8
	12	1014563	(006000–)	Washer, Flat, 0.40b 1.12d .12, Ss	4
	13	41430	(006000–)	Nut, Hex, Lock, M10 X 1.5, Nl	4
	14	39277	(006000–)	Screw, Hex, M8 X 1.25 X 25, 8.8	8
	15	32491	(006000–)	Washer, Flat, 0.31, Std	11
	16	32490	(006000–)	Washer, Flat, 0.25, Std	2
	17	1071785	(006000–)	Skirt, Eng Fan, Gas / Lp	1
	18	1037355	(006000–)	Screw, Hex, M8 X 1.25 X 35, 9.8, Sems	2
	19	41178	(006000–)	Washer, Flat, 0.25, Fendr	7
	20	1036892	(006000–)	Screw, Hex, M6 X 1.00 X 25, 9.8 Sems	7
	21	1019968	(006000–)	Bracket, Mtg, Radiator	1
	22	1040467	(006000–)	Screw, Hex, M6 X 1.00 X 20, 9.8, Sems	2
	23	30407	(006000–)	Clip, Keeper, Open	1
	24	08708	(006000–)	Nut, Hex, Lock, M6 X 1.00, Nl	1
	25	1054428	(006000–)	Shroud, Fan	1
	26	1070434	(006000–)	Bracket, Shrd, Fan, Upper, Sppt, G/Lpg	1
	27	1070860	(006000–)	Bracket, Shrd, Fan, Lower, Sppt, G/Lpg	1
	28	07790	(006000–)	Nut, Hex, Flng, M6 X 1.00	1
	29	1048166	(006000–)	Seal, Afmkt, Bulb, Str, 0.58d 08ft	1
	30	1015205	(006000–)	Seal, Afmkt, Ure, Adh, 0.38, 0.38w 02ft	4
	31	57569	(006000–)	Molding, Trim, Pvc, .08–.11 06.8l	1
	32	08709	(006000–)	Nut, Hex, Lock, M8 X 1.25, Nl	4

Fig. 38 – Mitsubishi Engine Radiator Hose Group (006000–)

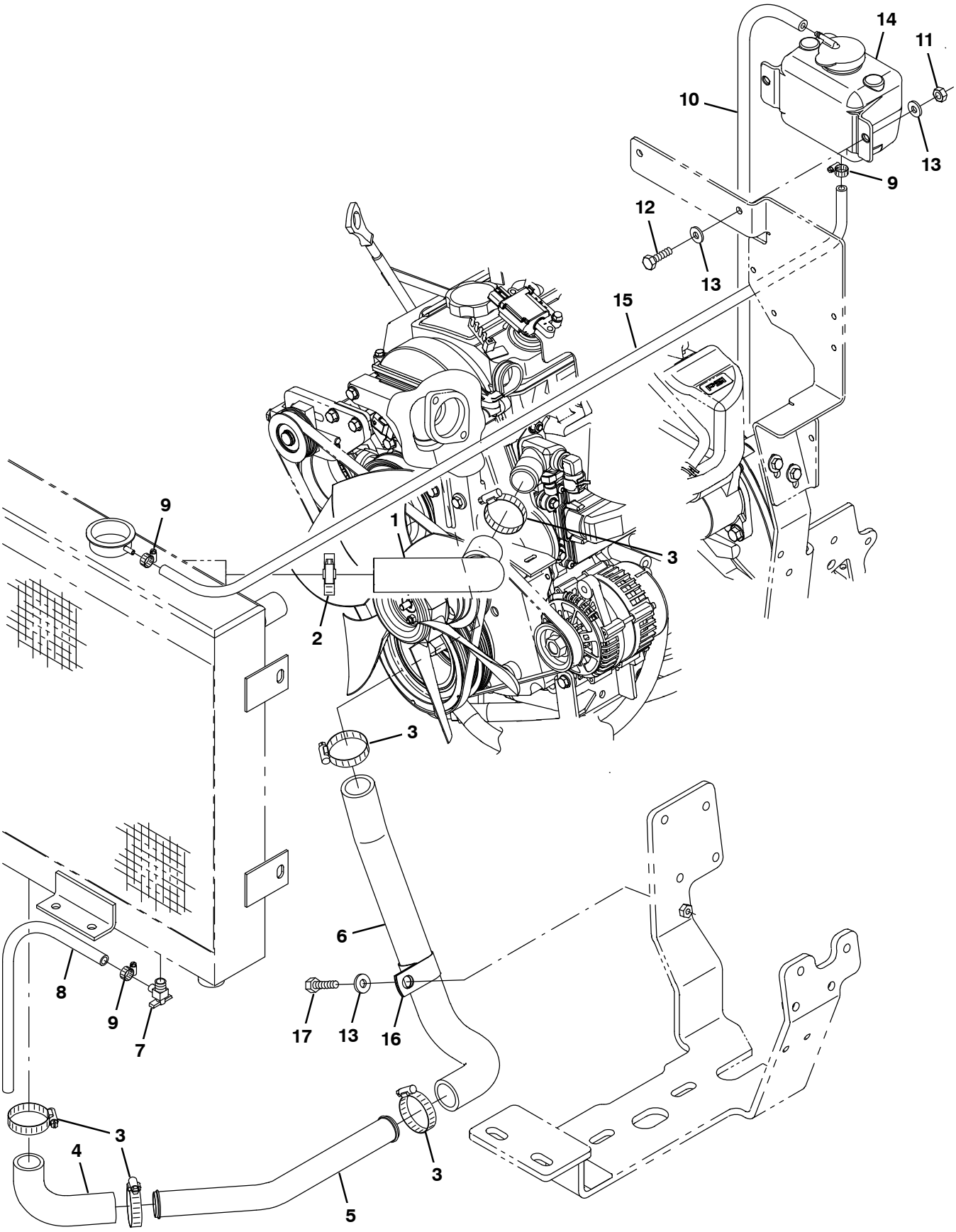

356300

Fig. 38 – Mitsubishi Engine Radiator Hose Group (006000–)

Ref.	Part No.	Serial Number	Description	Qty.
1	1070732	(006000–)	Hose, Coolant, Upper, Mold [Mit 2013]	1
2	22297	(006000–)	Clamp, Hose, Wormdrive, 1.56–2.50d, .50w	1
3	79381	(006000–)	Clamp, Hose, Wormdrive, 1.25–2.00d, .50w	5
4	1007482	(006000–)	Hose, Rbr, E90, 1.25id 1.25id 04.2 03.1	1
5	1071099	(006000–)	Tube, Coolant, 1.3d, Lower [Mit 2013]	1
6	9010904	(006000–)	Hose Kit, Coolant, Replmt [Mitsubishi}	1
7	51305	(006000–)	Fitting, Draincock, E90, .25npt	1
8	73471	(006000–)	Hose, Pvc, Clr, 0.38id 0.56od 022.0l	1
9	43844	(006000–)	Clamp, Hose, Wormdrive, 0.25–0.62d, .31w	3
10	87738	(006000–)	Hose, Fuel, 0.18id, 29.0l	1
11	08709	(006000–)	Nut, Hex, Lock, M8 X 1.25, Nl	2
12	39277	(006000–)	Screw, Hex, M8 X 1.25 X 25, 8.8	2
13	32491	(006000–)	Washer, Flat, 0.31, Std	5
14	1054382	(006000–)	Tank, Coolant, 03.6w 04.1hi 05.5l,1liter	1
15	1014843	(006000–)	Hose, Afmkt, Coolant Recvy, 05ft	1
16	53466	(006000–)	Clamp, Cable, Stl, 1.50d X 1.00w, 1hole	1
17	16931	(006000–)	Screw, Hex, M8 X 1.25 X 20, 8.8	1

Fig. 39 – Engine Fuel Tank Group, Gasoline (000000–001999)

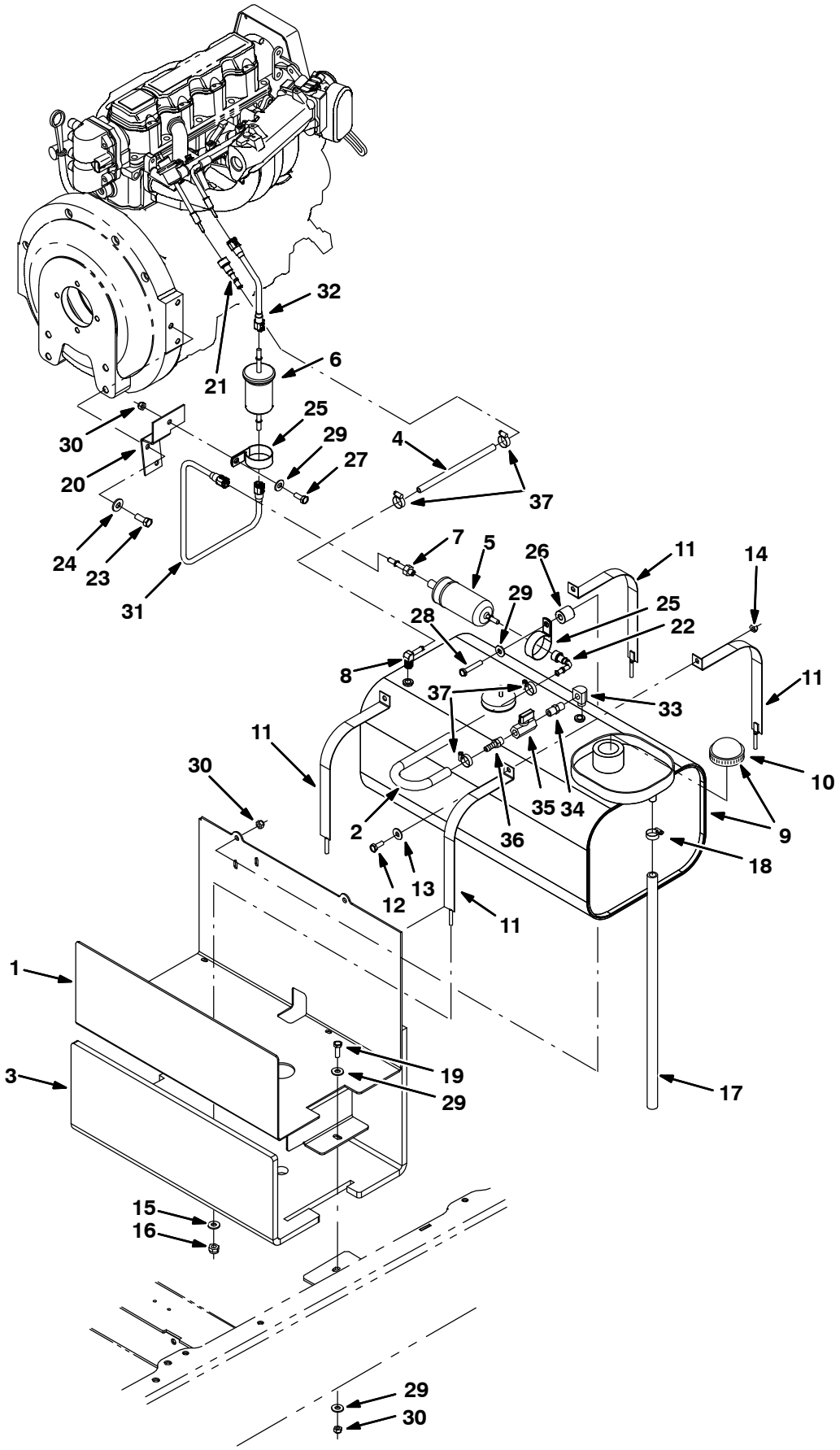

354418

Fig. 39 – Engine Fuel Tank Group, Gasoline (000000–001999)

	Ref.	Part No.	Serial Number	Description	Qty.
	1	1026550	(000000–001999)	Tray Wldt, Fuel	1
	2	87730	(000000–001999)	Hose, Fuel, 0.31id 12.0l	1
	3	1026759	(000000–001999)	Insulation, Flame–Retardant, 0.5	1
	4	1012160	(000000–001999)	Hose, Fuel, 0.31id 24.0l	1
	5	1011107	(000000–001999)	Pump, Fuel, Hi Press [Gm 1.6l/3.0l]	1
	6	372440	(000000–001999)	Filter, Fuel [Gm 1.6l/3.0l]	1
	7	1013086	(000000–001999)	Connector, Fuel, Qf	1
	8	9000355	(000000–001999)	Fitting, Brs, E90, Em05/Pm04	1
▽	9	9002395	(000000–001999)	Tank, Fuel, 11.26Gal, gas, Replmt	1
▲	10	48267	(000000–001999)	Cap, Tank, Fuel, 2.3neck 2.6d	1
▲		1039521	(000000–001999)	Send–Unit, Fuel	1
	11	1025229	(000000–001999)	Strap, Tank, Gas	4
	12	39277	(000000–001999)	Screw, Hex, M8 X 1.25 X 25, 8.8	2
	13	32491	(000000–001999)	Washer, Flat, 0.31, Std	2
	14	08709	(000000–001999)	Nut, Hex, Lock, M8 X 1.25, Nl	2
	15	32483	(000000–001999)	Washer, Flat, 0.25 Sae	4
	16	32981	(000000–001999)	Nut, Hex, Lock, .25–20, Nl	4
	17	1023482	(000000–001999)	Hose, Fuel, 0.50id 21.0l	1
	18	54333	(000000–001999)	Clamp, Hose, Wormdrive, 0.31–0.88d, .31w	1
	19	39277	(000000–001999)	Screw, Hex, M8 X 1.25 X 25, 8.8	2
	20	1019416	(000000–001999)	Bracket, Mtg, Fuel	1
	21	1013086	(000000–001999)	Connector, Fuel, Qf	1
	22	1019939	(000000–001999)	Connector, Fuel, E90, Qf	1
	23	21197	(000000–001999)	Screw, Hex, .38–16 X 1.00, 5	2
	24	32492	(000000–001999)	Washer, Flat, 0.38 Std	2
	25	1011895	(000000–001999)	Clamp, Cable, Stl, 2.00d X 0.75w, 1 Hole	2
	26	383912	(000000–001999)	Sleeve, P/M, 0.43b 1.00d 1.0l, Stl	1
	27	16931	(000000–001999)	Screw, Hex, M8 X 1.25 X 20, 8.8	1
	28	06956	(000000–001999)	Screw, Hex, M8 X 1.25 X 45, 8.8	1
	29	32491	(000000–001999)	Washer, Flat, 0.31, Std	6
	30	08709	(000000–001999)	Nut, Hex, Lock, M8 X 1.25, Nl	4
	31	1026664	(000000–001999)	Fuelline, .31d Str/Str, Plstc	1
	32	1019394	(000000–001999)	Fuelline, .31d Str/Str, Plstc	1
	33	27048	(000000–001999)	Fitting, Brs, E90, Pf04/Pm04	1
	34	398468	(000000–001999)	Fitting, Brs, Str, Pm04/Pm04	1
	35	1019940	(000000–001999)	Valve, Ball, 04pf, Chm W/ Handle	1
	36	392629	(000000–001999)	Fitting, Brs, Str, Bm05/Pm04	1
	37	54333	(000000–001999)	Clamp, Hose, Wormdrive, 0.31–0.88d, .31w	4

Fig. 40 – Engine Fuel Tank Group, Gasoline (002000–)

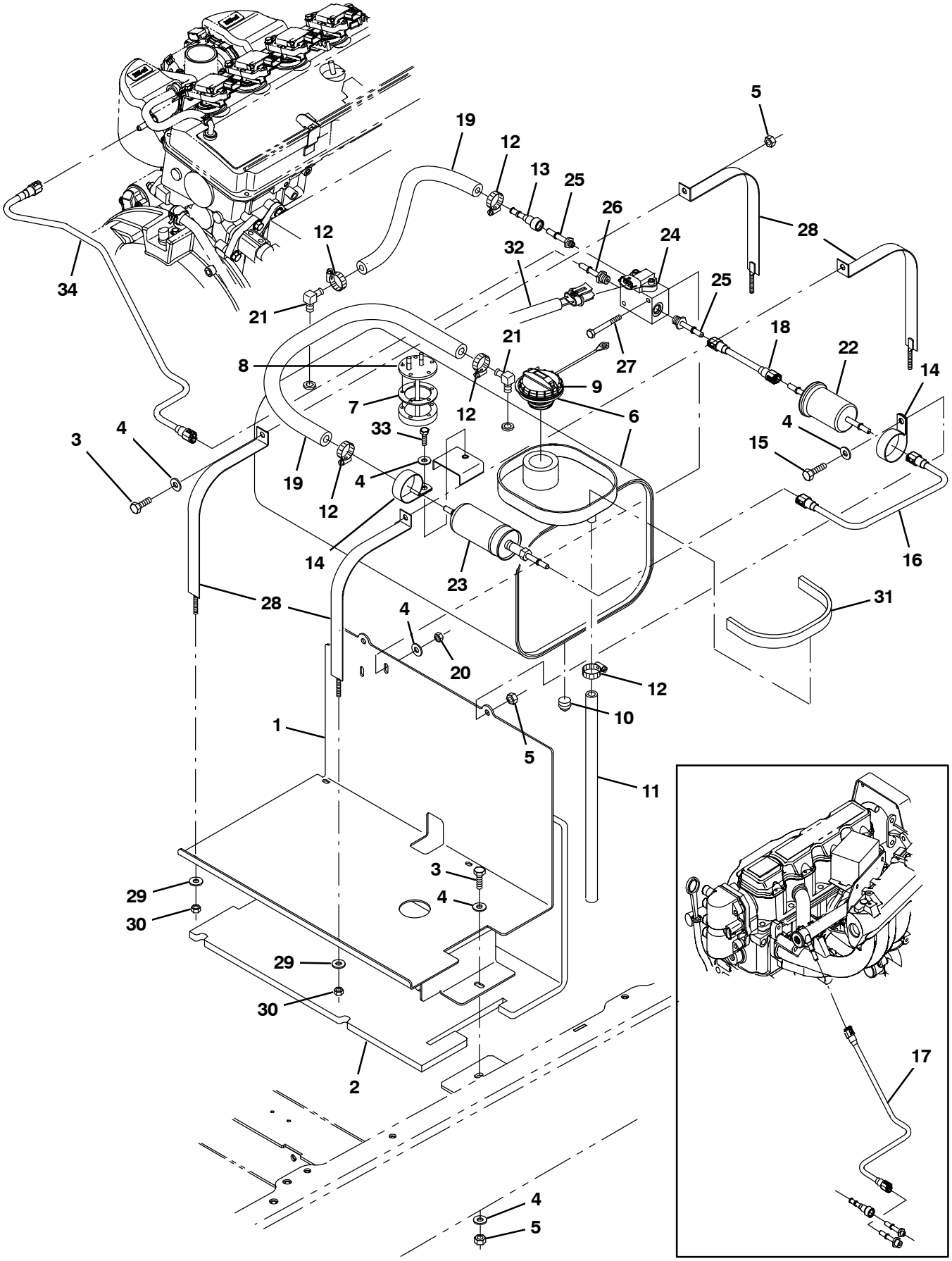

354418

Fig. 40 – Engine Fuel Tank Group, Gasoline (002000–)

	Ref.	Part No.	Serial Number	Description	Qty.
	1	1026550	(002000–)	Tray Wldt, Fuel	1
	2	1026759	(002000–)	Insulation, Flame–Retardant, 0.5	1
	3	39277	(002000–)	Screw, Hex, M8 X 1.25 X 25, 8.8	4
	4	32491	(002000–)	Washer, Flat, 0.31, Std	8
	5	08709	(002000–)	Nut, Hex, Lock, M8 X 1.25, Nl	5
▽	6	9003610	(002000–)	Tank, Fuel, 11.2gal, Gas, Replmt [2007]	1
▲	7	1033897	(002000–)	Gasket, Sender, Fuel	1
▲	8	1033901	(002000–)	Send–Unit, Fuel [2007]	1
▲	9	1032812	(002000–)	Cap, Fuel, Tank	1
▲	10	48126	(002000–)	Fitting, Pipe, Plug, Pm02, Sq Head	1
	11	1023482	(002000–)	Hose, Fuel, 0.50id, 21.0l	1
	12	54333	(002000–)	Clamp, Hose, Wormdrive, 0.31–0.88d, .31w	5
	13	1013086	(002000–)	Connector, Fuel, Qf	2
	14	1011895	(002000–)	Clamp, Cable, Stl, 2.00d X 0.75w, 1hole	2
	15	06956	(002000–)	Screw, Hex, M8 X 1.25 X 45, 8.8	2
	16	1034676	(002000–)	Fuelline, .31d Str/Str,Plstc[M20/T20 07]	1
	17	1034655	(002000–005999)	Fuelline, .31d Str/Str,Plstc[M20/T20 07]	1
	18	1012248	(002000–)	Fuelline, .31d Str/Str, Plstc	1
	19	1033746	(002000–)	Hose, Fuel, 0.31id [Evap Emission 07]	2
	20	08708	(002000–)	Nut, Hex, Lock, M6 X 1.00, Nl	2
	21	9000355	(002000–)	Fitting, Brs, E90, Em05/Pm04	2
	22	372440	(002000–)	Filter, Fuel [Gm 1.6l/3.0l]	1
	23	9006592	(002000–)	Pump, Fuel	1
	24	1028924	(002000–)	Manifold, Gas, Relief, Valve	1
	25	1029293	(002000–)	Fitting, Fuel, Str, 0.56–18 [07 Eng]	2
	26	1029295	(002000–)	Fitting, Fuel, Str, 0.38–24 [07 Eng]	1
	27	06949	(002000–)	Screw, Hex, M6 X 1.0 X 50, 8.8	2
	28	1025229	(002000–)	Strap, Tank, Gas	4
	29	32483	(002000–)	Washer, Flat, 0.25, Sae	4
	30	32981	(002000–)	Nut, Hex, Lock, .25–20, Nl	4
	31	62595–15	(002000–)	Molding, Trim, Pvc, .08–.11 13.2l	1
	32	385009	(002000–)	Harness, Manifold, Gas	1
	33	16931	(002000–)	Screw, Hex, M8 X 1.25 X 20, 8.8	1
	34	1071388	(006000–)	Fuelline, .31d Str/Str, Plstc [Mit 2013]	1

Fig. 41 – Engine Fuel Tank Group, LPG

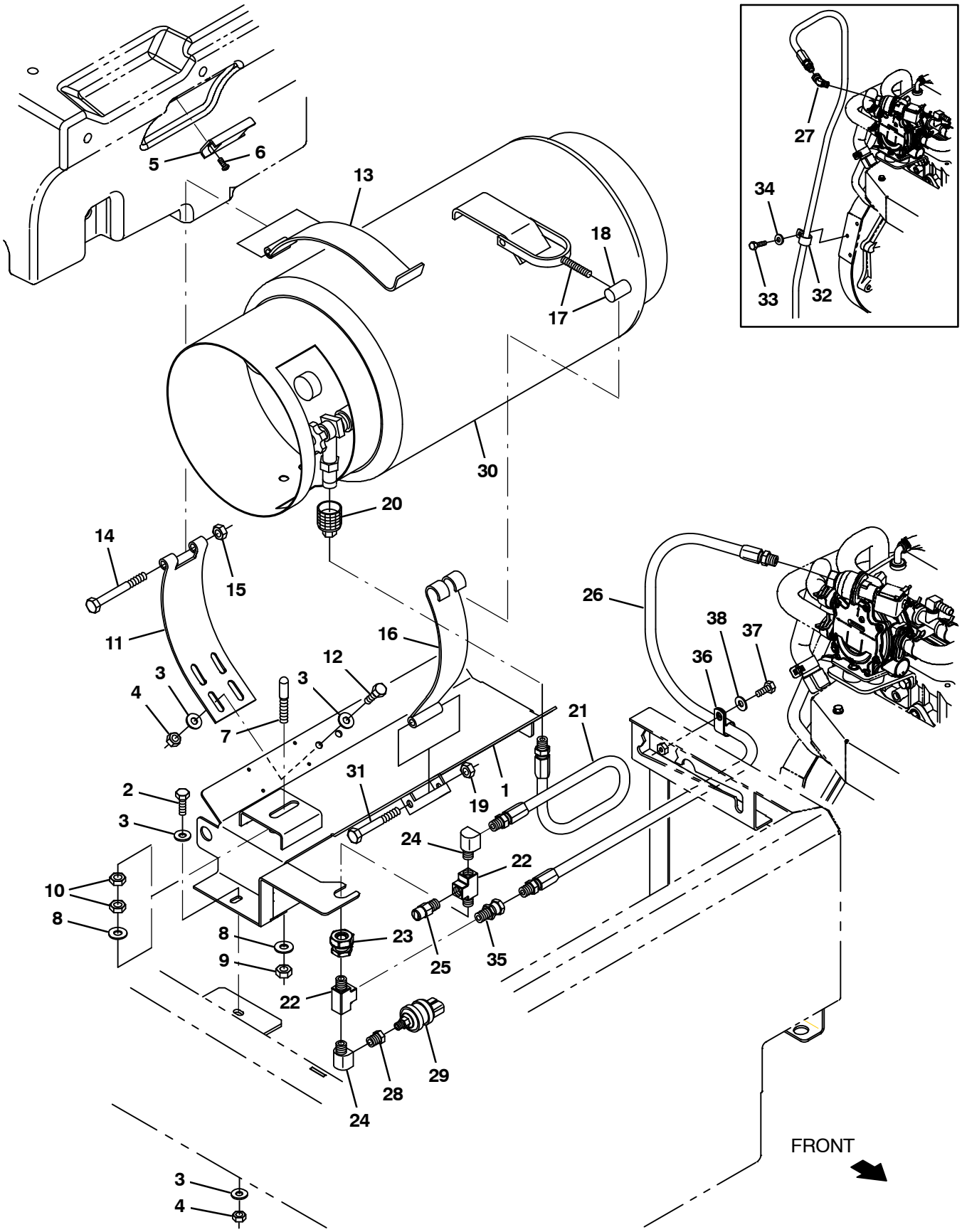

354419 – NA

Fig. 41 – Engine Fuel Tank Group, LPG

	Ref.	Part No.	Serial Number	Description	Qty.
	1	1017947	(000000–)	Tray Wldt, Lpg	1
	2	39277	(000000–)	Screw, Hex, M8 X 1.25 X 25, 8.8	2
	3	32491	(000000–)	Washer, Flat, 0.31, Std	8
	4	08709	(000000–)	Nut, Hex, Lock, M8 X 1.25, Nl	4
	5	63378	(000000–)	Magnet, Drive Brush	1
	6	09200	(000000–)	Screw, Pan, M5 X 0.8 X 12, Ss	2
	7	1024934	(000000–)	Pin, Locating, Lpg	1
	8	32492	(000000–)	Washer, Flat, 0.38 Std	2
	9	41430	(000000–)	Nut, Hex, Lock, M10 X 1.5, Nl	1
	10	32716	(000000–)	Nut, Hex, Jam, M10 X 1.5, Ss	2
	11	58589	(000000–)	Strap, Mtg, Tank, Lpg	1
	12	16931	(000000–)	Screw, Hex, M8 X 1.25 X 20, 8.8	2
	13	57297	(000000–)	Strap, Mtg, Tank, Lpg, Hinge	1
	14	35710	(000000–)	Screw, Hex, .38–16 X 3.75, 5	1
	15	59156	(000000–)	Nut, Hex, Lock, .38–16, Nl, Ss	1
	16	58590	(000000–)	Strap, Mtg, Tank, Lpg	1
▽	17	53400–1	(000000–)	Latch Assy, Mtg, Tank, Lpg, W/Nut	1
▲	18	53400–4	(000000–)	Nut, Adj, Mtg, Tank, Lpg	1
	19	36643	(000000–)	Nut, Hex, Lock, .38–16, Nl, Thin	1
	20	26496	(000000–)	Fitting, Brs, Qdc, Pf04, Lpg Fem	1
	21	22308–6	(000000–)	Hose, Lpg, Med05, Pm04str/Sm04str, 14.0l	1
	22	150709	(000000–)	Fitting, Brs, Tee, Pf04/Pf04/Pm04, Run	2
	23	78122	(000000–)	Fitting, Brs, Str, Pf04/Pf04, Bh	1
	24	27048	(000000–)	Fitting, Brs, E90, Pf04/Pm04	2
	25	24047	(000000–)	Valve, Lpg, Press Relief [Rego]	1
	26	19760	(000000–)	Hose, Lpg, Med05, Pm04str/Sm04str, 55.0l	1
	27	392645	(000000–007077)	Fitting, Pipe, E45, Spcl	1
	28	17414	(000000–)	Fitting, Hyd, Str, Pf02/Pm04	1
	29	23156	(000000–)	Switch, Press, 12vdc 08a Spst Nc 0070psi	1
	30	24928–1	(000000–)	Tank, Lpg, 33lb, W/ Gauge [Empty, Liq]	1
	31	35707	(000000–)	Screw, Hex, .38–16 X 3.00, 5	1
	32	69234	(006000–007077)	Clamp, Cable, Stl, 1.00d X 0.75w, 1hole	1
	33	09740	(006000–007077)	Screw, Hex, M8 X 1.25 X 20, Ss	1
	34	32491	(006000–007077)	Washer, Flat, 0.31, Std	1
	35	11442–23	(007078–)	Fitting, Pipe, Str, Pm04/Sf04	1
	36	67767	(007078–)	Clamp, Cable, Stl, 0.69d X 0.62w, 1hole	1
	37	06942	(007078–)	Screw, Hex, M6 X 1.00 X 16, 8.8	1
	38	32483	(007078–)	Washer, Flat, 0.25, Sae	1

Fig. 42 – Battery and Electrical Group

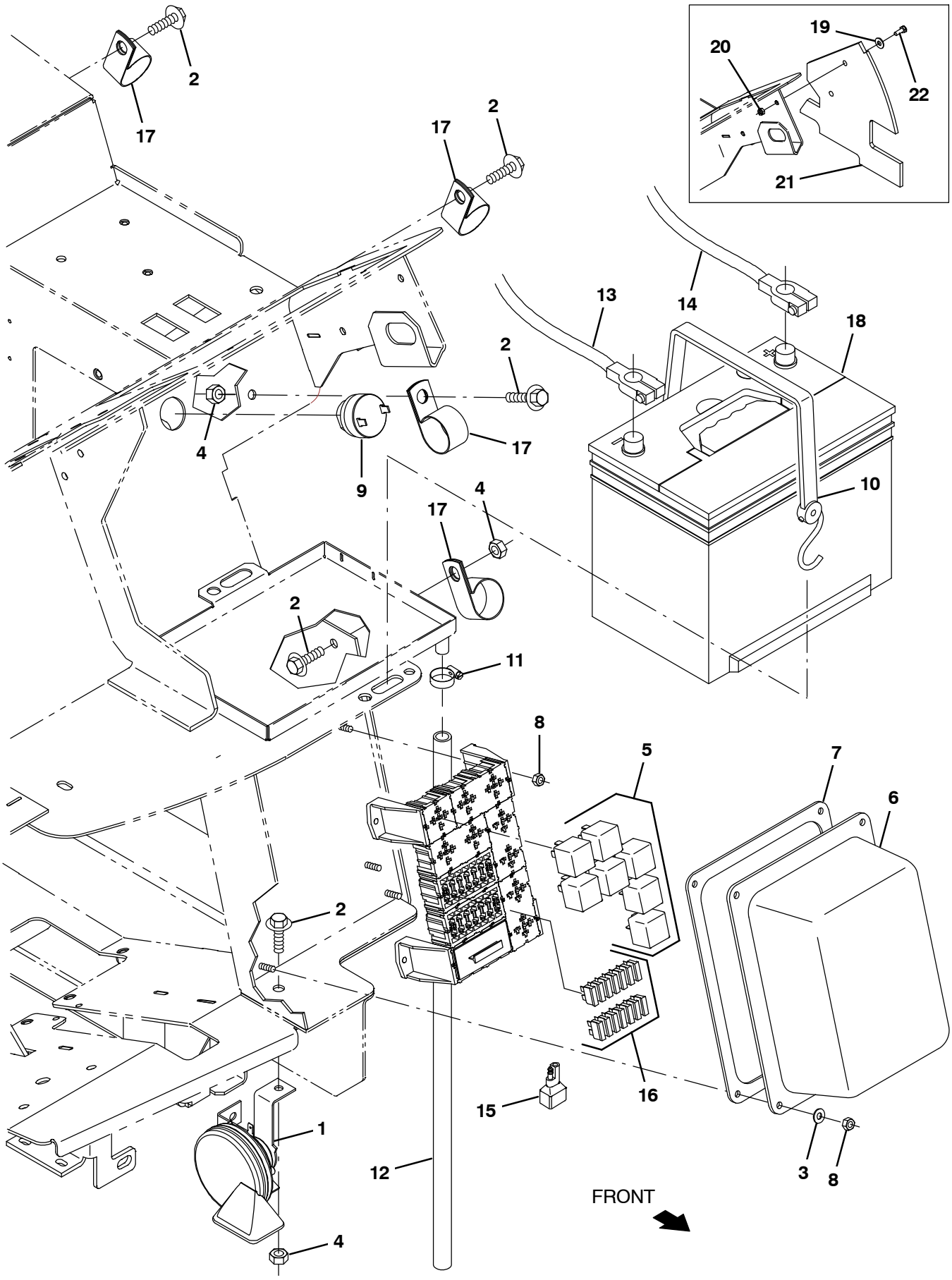

354425 – G/LP

Fig. 42 – Battery and Electrical Group

Ref.	Part No.	Serial Number	Description	Qty.
1	369704	(000000–)	Horn, 12vdc, Dba [Wolo]	1
2	1037346	(000000–)	Screw, Hex, M8 X 1.25 X 25, 9.8, Sems	5
3	19066	(000000–)	Washer, Flat, #10	4
4	08709	(000000–)	Nut, Hex, Lock, M8 X 1.25, Nl	3
5	57804	(000000–)	Relay, 12vdc, 40a, Spdt N/O	7
6	1024274	(000000–)	Cover, Fuse, Block	1
7	1026576	(000000–)	Gasket, Cover, Fuse Block	1
8	06549	(000000–)	Nut, Hex, Lock, M5 X 0.8, Nl	8
9	1021290	(000000–)	Alarm, Warning [Sonalert, St628]	1
10	33671	(000000–)	Strap, Rbr, Tie–Down, 2/Hooks 19.0l	1
11	54333	(000000–)	Clamp, Hose, Wormdrive, 0.31–0.88d, .31w	1
12	20778	(000000–)	Hose, Pvc, Clr, 0.50id 0.69od 30.00l	1
13	60295	(000000–005999)	Cable, Battery, 02ga 60.0l Blk .41ring	1
13	1071481	(006000–)	Cable, Battery, 2ga, 62l, Blk	1
14	68869	(000000–005999)	Cable, Battery, 02ga 48.0l Red .41ring	1
14	1071482	(006000–)	Cable, Battery, 2ga, 60l, Red	1
15	222290	(000000–)	Diode, Ele, Plug	1
16	762514	(000000–)	Fuse, 015a	14
17	53466	(000000–)	Clamp, Cable, Stl, 1.50d X 1.00w, 1h	4
18	10137	(000000–)	Battery, 12vdc, 0475cca, Ah, Wet	1
19	32490	(000000–001278)	Washer, Flat, 0.25 Std	2
20	08708	(000000–001278)	Nut, Hex, Lock, M6 X 1.0, Nl	2
21	1027228	(000000–001278)	Seal, Radiator, Upper	1
22	06942	(000000–001278)	Screw, Hex, M6 X 1.0 X 16, 8.8	2

Fig. 43 – Wheel Group, Front Drive

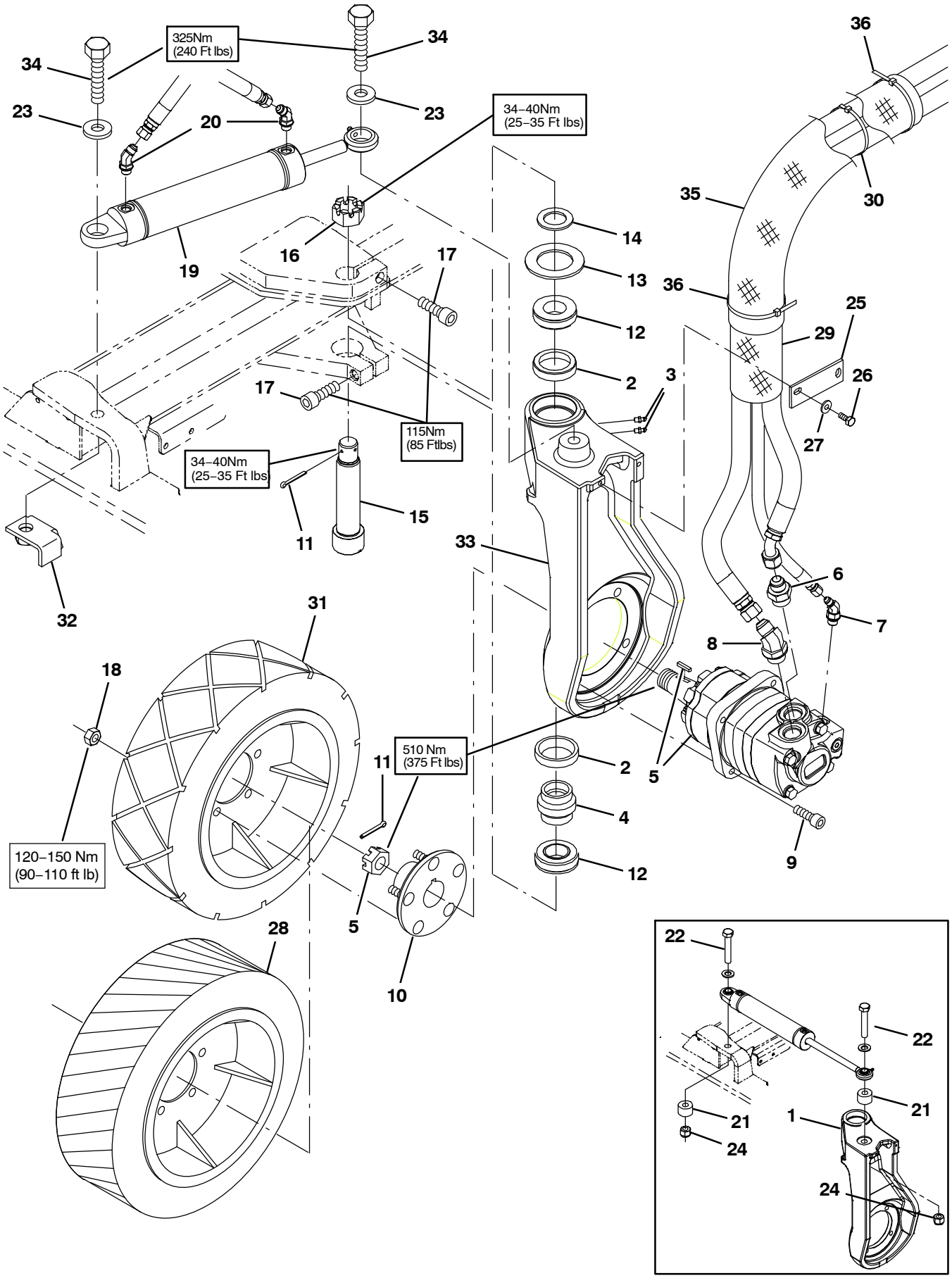

354426

Fig. 43 – Wheel Group, Front Drive

	Ref.	Part No.	Serial Number	Description	Qty.
	1	9008248	(000000–003675)	Housing Kit, Drive, Front, Replmt	1
	2	51338	(000000–)	Bearing, Cup, 2.56d 0.55w	2
	3	47801	(000000–)	Fitting, Grease, Str Pm04 .63l	2
	4	374560	(000000–)	Seal, Drive, Rear, Grease Cav	1
	5	379609	(000000–)	Motor, Hyd, Gear, Int 19.0 Bi–Dir 3000 (See Breakdowns)	1
	6	42223	(000000–)	Fitting, Hyd, Str, Jm10/Om12	1
	7	393215	(000000–)	Fitting, Hyd, E45, Jm04/Om06	1
	8	1024249	(000000–)	Fitting, Hyd, E45, Jm10/Om12	1
	9	19583	(000000–)	Screw, Soc, .50–13 X 1.50, Al	4
▽	10	54087	(000000–)	Hub Assy, Wheel, 5 Bolt 4.50bc Taper B	1
▲		32126	(000000–)	Stud, Wheel, .50–20 X 1.50l, 0.370th	5
	11	08180	(000000–)	Pin, Cotter, .125 X 2.00	2
	12	51339	(000000–)	Bearing, Cone, 1.38b 0.71w	2
	13	374563	(000000–)	Washer, Flat, 2.16b 3.50d .16, Felt	1
	14	54051	(000000–)	Washer, Flat, 1.39b 2.12d .13, Stl	1
	15	73281	(000000–)	Bolt, Shld, 1.37d X 5.13l,1.1–18 Drilled	1
	16	54052	(000000–)	Nut, Hex, Sltd, 1.12–18	1
	17	72926	(000000–)	Screw, Soc, M16 X 2.0 X 50, 12.9	2
	18	24339	(000000–)	Nut, Wheel, .50–20 X 60 Angle	5
	19	1017903	(000000–006885)	Cylinder, Hyd, 2.0b,15.2l,09.00strk,3000	1
	19	1034270	(006886–)	Cylinder, Hyd, 2.0b,15.2l,09.00strk,3000	1
	20	47522	(000000–)	Fitting, Hyd, E45, Jm06/Om06	2
	21	71340	(000000–003675)	Tube, Rnd, 1.75d 0.77b 01.1l, Stl, Pntd	2
	22	71341	(000000–003675)	Screw, Hex, .75–10 X 4.00, 5	2
	23	39350	(000000–006885)	Washer, Flat, 0.75 Sae	2
	23	1073487	(006886–)	Washer, Flat, .781b 1.63od .16, Stl, Blk	2
	24	32987	(000000–003675)	Nut, Hex, Lock, .75–10, Nl	2
	25	58842	(000000–)	Bar, Flat, Stl 0.19, 01.50 X 04.1l	1
	26	16931	(000000–)	Screw, Hex, M8 X 1.25 X 20, 8.8	2
	27	32491	(000000–)	Washer, Flat, 0.31, Std	2
	28	1061973	(000000–)	Tire, Drive, Scrbr, Pu, Grey, 18.0X6.0 (Optional Polyurethane)	1
	29	57315	(000000–)	Sleeve, Nyl, #37 05.0l	2
	30	49266	(000000–)	Tie, Cable, Nyl, 07.3l .19w 1.8 Max D	2
	31	1059343	(000000–)	Tire, Drive, Scrbr, Non–Skid, 18.0X6.0	1
	32	1060521	(003676–)	Bracket, Mtg, Sppt	1
	33	1071061	(003676–)	Housing, Sppt, Front Wheel	1
	34	77345	(003676–)	Screw, Hex, .75–10 X 3.25, G5	1
	35	82832	(006000–)	Sleeve, Nyl, 2.38id 25.0l	1
	36	49266	(006000–)	Tie, Cable, Nyl, 07.3l .19w 1.8 Max D	2

Fig. 44 – Wheel Group, Rear

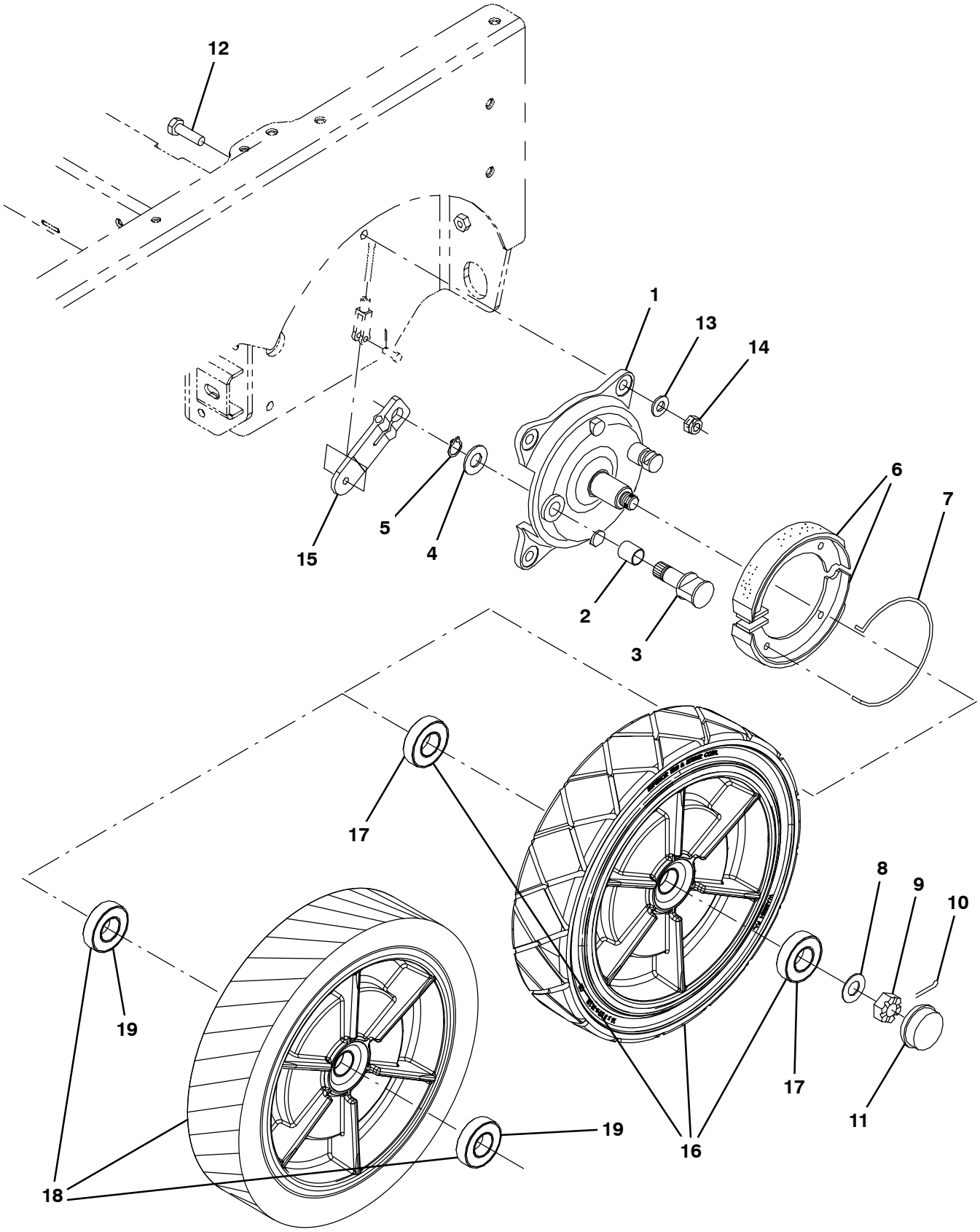

354427

Fig. 44 – Wheel Group, Rear

	Ref.	Part No.	Serial Number	Description	Qty.
▽		360023	(000000–)	Brake Assy, Drum, Mech, 07.0d 1.2w	2
▲	1	360270	(000000–)	Plate, Backing, Brake	1
▲	2	360271	(000000–)	Bushing, Sleeve, 0.78b 0.86d 0.93l, Bnz	1
▲	3	360272	(000000–)	Cam, Plt, Brake [Nickel]	1
▲	4	360273	(000000–)	Washer, Flat, M21.0b X 37d X 3	1
▲	5	360274	(000000–)	Retainer, Ring, Brake	1
▲	6	360275	(000000–)	Shoe, Brake, 180 X 30mm	2
▲	7	360276	(000000–)	Spring, Wir, 0.25d, Return, Brake	1
	8	49145	(000000–)	Washer, Flat, 0.76b 1.50d .06, Ss	2
	9	86659	(000000–)	Nut, Hex, Sltd, .75–16	2
	10	08171	(000000–)	Pin, Cotter, .156 X 2.00	2
	11	54390	(000000–)	Cap, Hub, Dust 2.57d 0.77l	2
	12	06969	(000000–)	Screw, Hex, M12 X 1.75 X 40, 8.8	8
	13	32486	(000000–)	Washer, Flat, 0.50 Sae	8
	14	08711	(000000–)	Nut, Hex, Lock, M12 X 1.75,Nl	8
	15	360802	(000000–)	Arm, Lever, Brake, 4.1 [Knott]	2
▽	16	1059671	(000000–)	Tire, Idler, Scrbr, Blk, 16.0X3.5	2
▲	17	360074	(000000–)	Bearing, Ball, 1.18b 2.44d 0.63w	2
▽	16	1059347	(000000–)	Tire, Idler, Scrbr, Non–Skid, 16.0x3.5 (Optional)	2
▲	17	360074	(000000–)	Bearing, Ball, 1.18b 2.44d 0.63w	2
▽	18	1061974	(000000–)	Tire, Idler, Scrbr, Pu, Grey, 16.0X3.5 (Optional Polyurethane)	2
▲	19	360074	(000000–)	Bearing, Ball, 1.18b 2.44d 0.63w	2

Fig. 45 – Brake Pedal Linkage Group

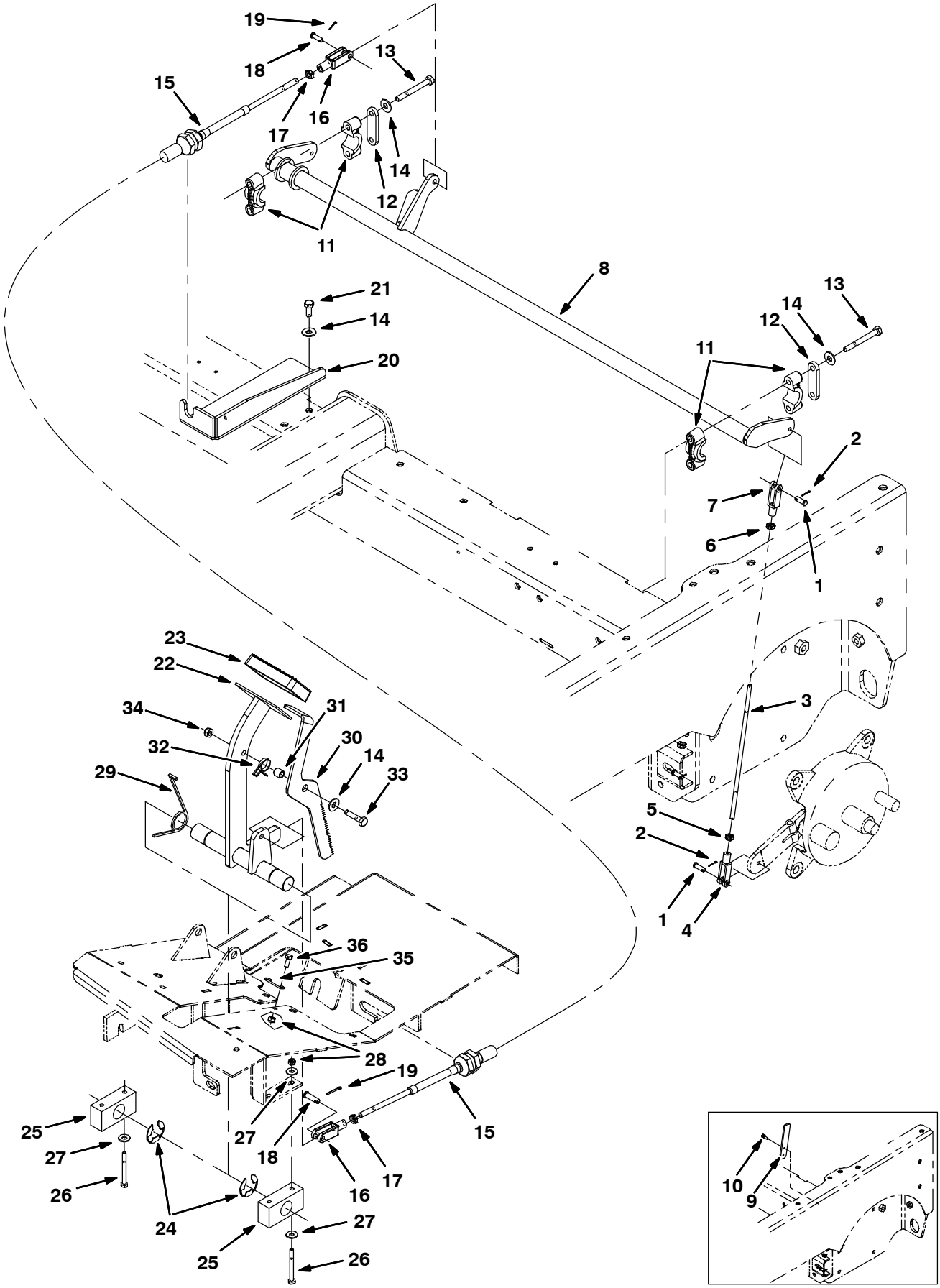

354428

Fig. 45 – Brake Pedal Linkage Group

Ref.	Part No.	Serial Number	Description	Qty.
1	14605	(000000–)	Pin, Clevis, 0.25d X 0.75l	4
2	08170	(000000–)	Pin, Cotter, .062 X 0.50	4
3	364347	(000000–)	Rod	2
4	14595–1	(000000–)	Clevis, Adj, 0.25 Pin, 0.25–28 Rh, Pl	2
5	364948	(000000–)	Nut, Hex, Std, .25–28, Lh	2
6	01714	(000000–)	Nut, Hex, Std, .25–28	2
7	364864	(000000–)	Clevis, Adj, 0.25pin, 0.25–28left Pl	2
8	1022031	(000000–)	Shaft Wldt, Brake	1
9	1026025	(000000–007328)	Plate, Stop, Brake	2
10	361339	(000000–007328)	Screw, Hex, M6 X 1.0 X 16, Fmg	4
11	381502	(000000–)	Bearing, Split, 1.00b	4
12	382224	(000000–)	Plate, Sppt	2
13	39279	(000000–)	Screw, Hex, M8 X 1.25 X 70, 8.8	4
14	32491	(000000–)	Washer, Flat, 0.31, Std	7
15	1025495	(000000–)	Cable, Push / Pull, 063.0l 4.0, .31–24	1
16	58311	(000000–)	Clevis, Adj, 0.31pin, 0.31–24	2
17	20170	(000000–)	Nut, Hex, Jam, .31–24	2
18	69582	(000000–)	Pin, Clevis, 0.31d X 1.00l	2
19	08179	(000000–)	Pin, Cotter, .094 X 1.00	2
20	1022736	(000000–)	Bracket, Mtg, Cable	1
21	16931	(000000–)	Screw, Hex, M8 X 1.25 X 20, 8.8	2
22	1022243	(000000–)	Shaft Wldt, Pedal, Brake	1
23	51109	(000000–)	Pad, Pedal, Brake, 3.96l 2.36w 0.75	1
24	23788	(000000–)	Ring, Retaining, Ext, 0.98d, [E–Ring]	2
25	86751	(000000–)	Bearing, Pillowblock, 1.02b [Solid Pye]	2
26	06548	(000000–)	Screw, Hex, M6 X 1.0 X 60, 8.8	4
27	32490	(000000–)	Washer, Flat, 0.25 Std	8
28	08708	(000000–)	Nut, Hex, Lock, M6 X 1.0, Nl	6
29	54607	(000000–)	Spring, Tors, 1.13id .12wir 02.3coil Rh	2
30	1025487	(000000–)	Pedal, Brake, Lock	1
31	46563	(000000–)	Bushing, Sleeve, 0.37b 0.50d 0.50l, Oib	1
32	59009	(000000–)	Spring, Tors, 0.75id .06wir 02.8coil	1
33	06955	(000000–)	Screw, Hex, M8 X 1.25 X 35, 8.8	1
34	08709	(000000–)	Nut, Hex, Lock, M8 X 1.25, Nl	1
35	71367	(000000–)	Spring, Wir, 0.08d, Brake, Parking	1
36	06942	(000000–)	Screw, Hex, M6 X 1.0 X 16, 8.8	2

Fig. 46 – Directional Pedal Group

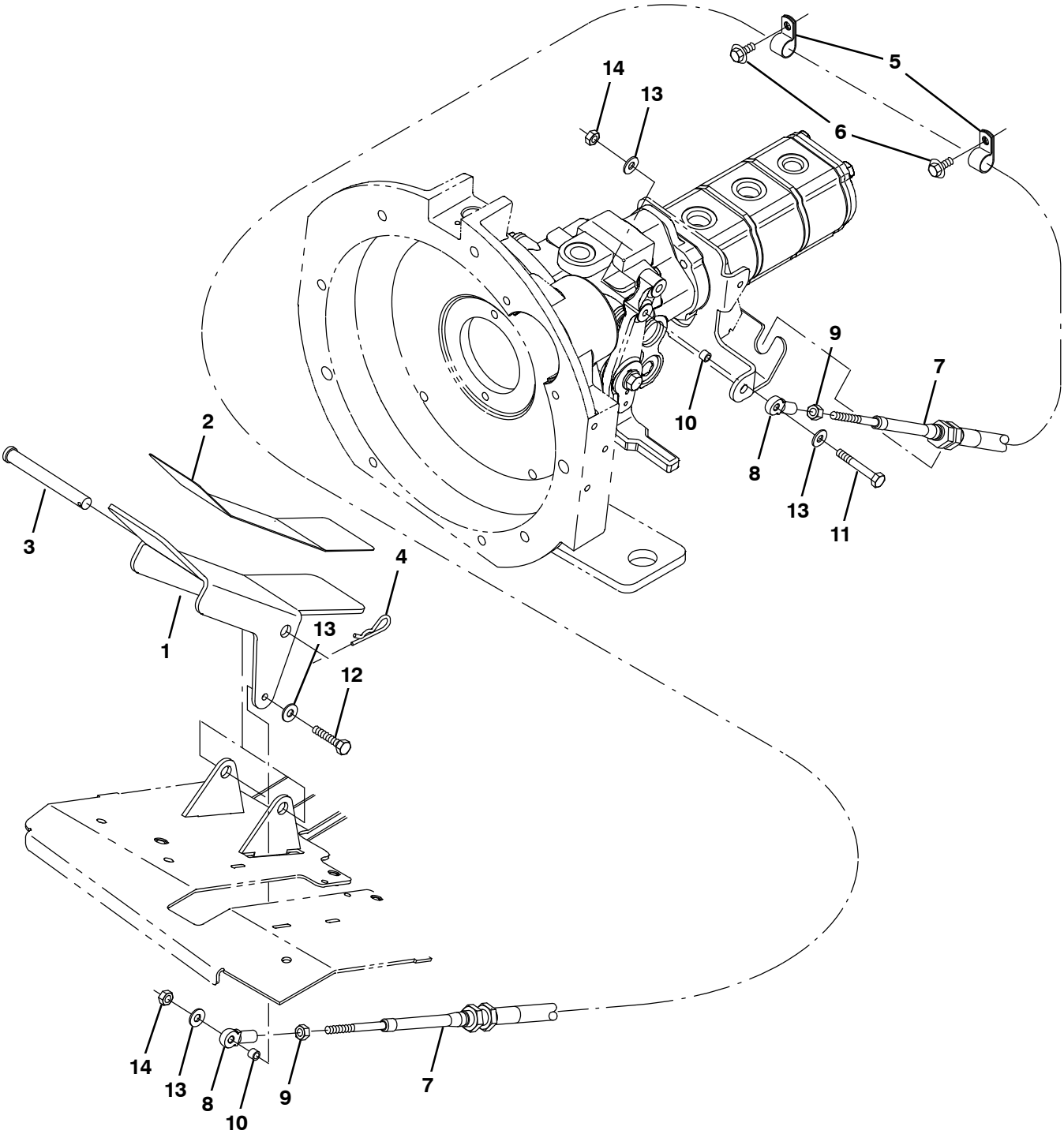

354429

Fig. 46 – Directional Pedal Group

Ref.	Part No.	Serial Number	Description	Qty.
1	1025140	(000000–)	Pedal, Propel	1
2	58819	(000000–)	Tread, Non–Skid, 03.0w 11.6l	1
3	59668	(000000–)	Pin, Clevis, 0.50 D X 4.50l	1
4	08182	(000000–)	Pin, Cotter, .125 X 1.00	1
5	67767	(000000–)	Clamp, Cable, Stl, 0.69d X 0.62w, 1h	2
6	361339	(000000–)	Screw, Hex, M6 X 1.0 X 16, Fmg	2
7	1022345	(000000–)	Cable, Push / Pull, 098.0l .25–28/.25–28	1
8	68866	(000000–)	Rod–End, .25–28rh Fem 0.25b [Teflon]	2
9	01714	(000000–)	Nut, Hex, Std, .25–28	2
10	65441	(000000–)	Tube, 00.38d 00.26b 00.3l Stl Plt	2
11	41399	(000000–)	Screw, Hex, .25–20 X 2.25, Ss	1
12	42180	(000000–)	Screw, Hex, .25–20 X 1.75, Ss	1
13	32490	(000000–)	Washer, Flat, 0.25 Std	4
14	41169	(000000–)	Nut, Hex, Lock, .25–20, Nl, Ss	2

Fig. 47 – Hydraulic Pump Linkage Group

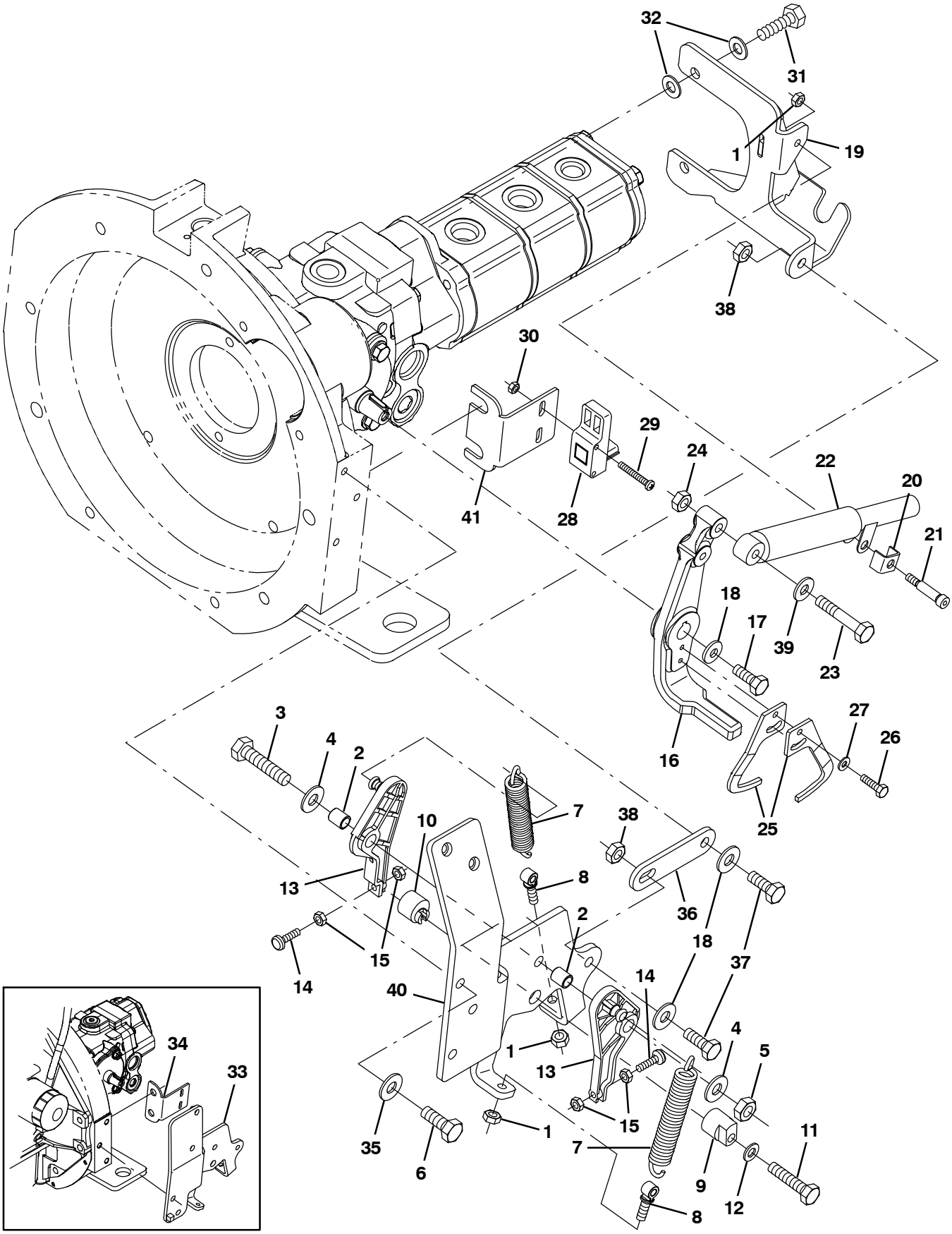

356301−G/LP

Fig. 47 − Hydraulic Pump Linkage Group

Ref.	Part No.	Serial Number	Description	Qty.
1	41169	(000000−)	Nut, Hex, Lock, .25−20, Nl, Ss	3
2	63234	(000000−)	Tube, 00.50d 00.38b 00.6l Stl	2
3	42467	(000000−)	Screw, Hex, .38−16 X 2.00, Ss	1
4	32492	(000000−)	Washer, Flat, 0.38 Std	2
5	36643	(000000−)	Nut, Hex, Lock, .38−16, Nl, Thin	1
6	21197	(000000−)	Screw, Hex, .38−16 X 1.00, 5	2
7	11842	(000000−)	Spring, Extn, 0.75od X 0.12wir, 4.3l	2
8	48079	(000000−)	Bolt, Eye, .25−20 X 1.40 X .25 Eye	1
9	53947	(000000−)	Cam, Centering, Pintle	1
10	54655	(000000−)	Cam, Centering, Pintle	1
11	74440	(000000−)	Screw, Hex, M8 X 1.25 X 40, Ss, Nl	1
12	39349	(000000−)	Washer, Flat, 0.31 Sae	1
13	53953	(000000−)	Arm, Cntrl, Pintle, Centering	2
14	54205	(000000−)	Bumper, Rbr, 0.5d 0.16t M5 X 08	2
15	50335	(000000−)	Nut, Hex, Std, M5 X 0.8, 8	4
16	1027233	(000000−)	Arm, Pintle	1
17	83879	(000000−)	Screw, Hex, .31−24 X 0.75, Nl	1
18	41186	(000000−)	Washer, Belleville, .31	3
19	1027313	(000000−)	Bracket Wldt, Propel, Pintle	1
20	84170	(000000−)	Bracket, Retainer, Safety	1
21	16213	(000000−)	Bolt, Shld, .31d X 1.00, .25−20	1
22	73411	(000000−)	Shock Absorber, 2.3 Strk	1
23	39278	(000000−)	Screw, Hex, M8 X 1.25 X 50, 8.8	1
24	08709	(000000−)	Nut, Hex, Lock, M8 X 1.25, Nl	1
25	1022787	(000000−)	Arm [Positioning]	2
26	09252	(000000−)	Screw, Hex, M5 X 0.8 X 20, 8.8	2
27	01683	(000000−)	Washer, Flat, #10 Ss	2
28	1022779	(000000−)	Sensor, Spd / Dir, 6−30vdc	1
29	09198	(000000−)	Screw, Pan, M4 X 0.7 X 35, Ss	2
30	33932	(000000−)	Nut, Hex, Lock, M4 X 0.7, Nl, Ss	2
31	46559	(000000−)	Screw, Hex, .38−16 X 1.25, Nl	2
32	32485	(000000−)	Washer, Flat, 0.38 Sae	4
33	1022140	(000000−005999)	Bracket, Propel, Gas/Lpg	1
34	1022798	(000000−005999)	Bracket, Mtg, Cyl	1
35	41187	(000000−)	Washer, Flat, Belleville, .38	2
36	1032399	(000000−)	Strap, Sppt	1
37	09010	(000000−)	Screw, Hex, M8 X 1.25 X 25, Ss	2
38	08713	(000000−)	Nut, Hex, Lock, M8 X 1.25, Nl, Ss	2
39	32490	(000000−)	Washer, Flat, 0.25 Std	1
40	1070798	(006000−)	Bracket, Propel, G/Lpg [Mit 2013]	1
41	1070819	(006000−)	Angle, Mtg	1

Fig. 48 – Hopper Lift Arms Group

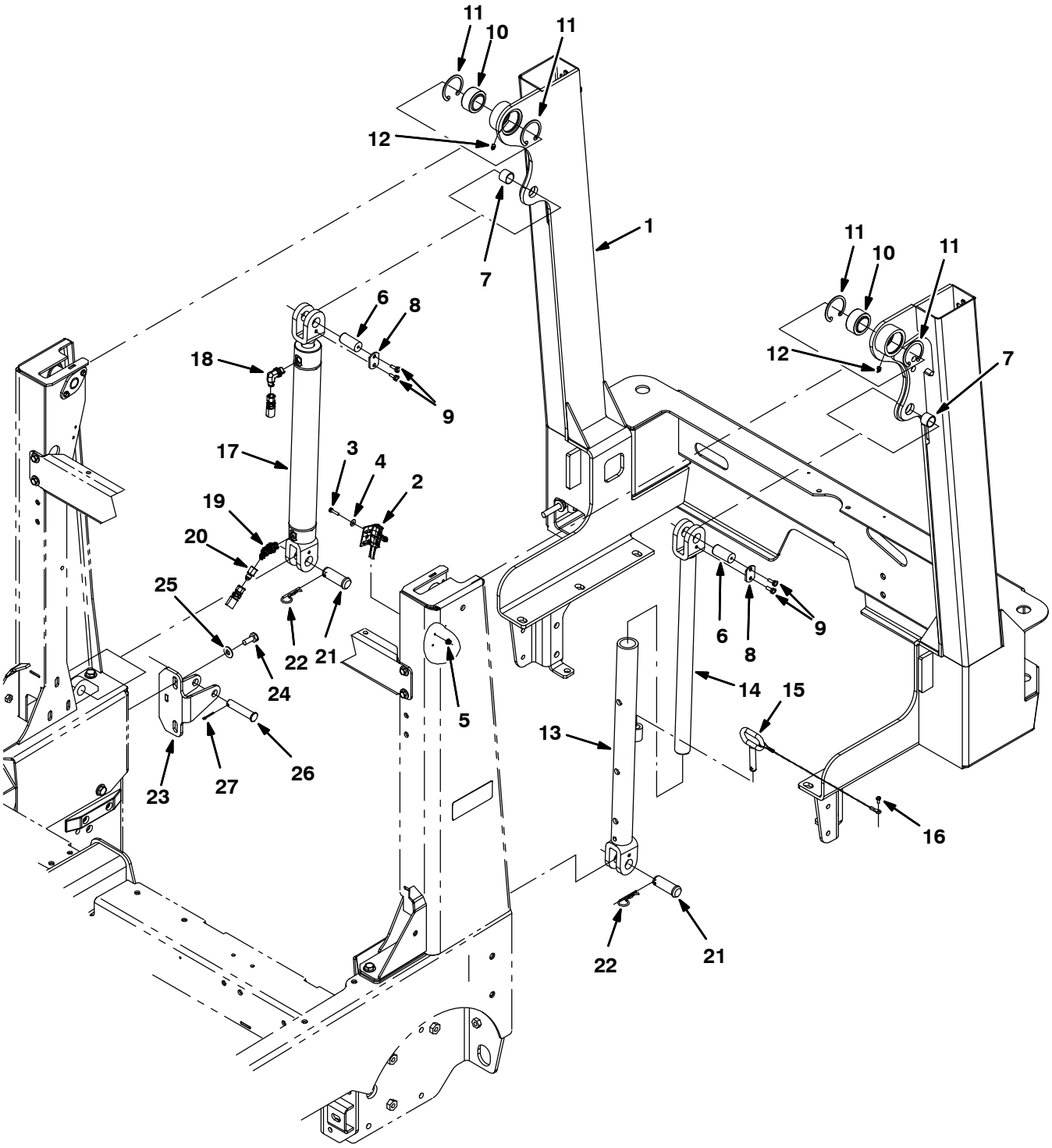

354430

Fig. 48 – Hopper Lift Arms Group

Ref.	Part No.	Serial Number	Description	Qty.
1	1018241	(000000–004292)	Frame Wldt, Lift, Hppr	1
1	1069933	(004293–)	Frame Wldt, Lift, Hppr	1
2	23211	(000000–)	Switch, Snap, 15a No, Rlr	1
3	09252	(000000–)	Screw, Hex, M5 X 0.8 X 20, 8.8	2
4	19066	(000000–)	Washer, Flat, #10	2
5	07789	(000000–)	Nut, Hex, Flng, M5 X 0.8	2
6	1018226	(000000–)	Pin, 0.87d 01.8l, 1/M6 X 1.0, 1cham,Stl	2
7	364587	(000000–)	Bushing, Sleeve, 0.88b 1.00d 0.75l, Bnz	2
8	72897	(000000–)	Plate, Pin, Clevis, Upper	2
9	1040467	(000000–)	Screw, Hex, M6 X 1.0 X 20, 9.8, Sems	4
10	42120–1	(000000–)	Bearing, Self Align, 1.25b 2.00d	2
11	59542	(000000–)	Ring, Retaining, Int, 2.00d	4
12	07259	(000000–)	Fitting, Grease, Str Pm04 .47l	2
13	1018260	(000000–)	Tube Wldt, Arm, Safety	1
14	1018262	(000000–)	Rod Wldt, Arm, Safety	1
15	1018266	(000000–)	Pin, Arm, Safety	1
16	16944	(000000–)	Screw, Hex, M4 X 0.7 X 10, Fmg	1
17	1029646	(000000–)	Cylinder, Hyd, 2.0B 24.1L 15.00Strk 3000	1
18	47638	(000000–)	Fitting, Hyd, E90, Jm04/Om06	1
19	393215	(000000–)	Fitting, Hyd, E45, Jm04/Om06	1
20	1025904	(000000–)	Fitting, Hyd, Rst, Jf04/Jm04, .028	1
21	1018227	(000000–)	Pin, Clevis, 0.88d X 2.25l	2
22	02942	(000000–)	Pin, Cotter, Hair, 0.62d .120 Wir	2
23	1018275	(000000–)	Plate Wldt, Arm, Stop	1
24	09028	(000000–)	Screw, Hex, M10 X 1.5 X 25, Ss	2
25	01686	(000000–)	Washer, Flat, 0.44b 1.00d .08, Ss	2
26	1018276	(000000–)	Pin, Clevis, 0.62d X 2.91l	1
27	08179	(000000–)	Pin, Cotter, .094 X 1.00	1

Fig. 49 – Hopper and Debris Screen Group

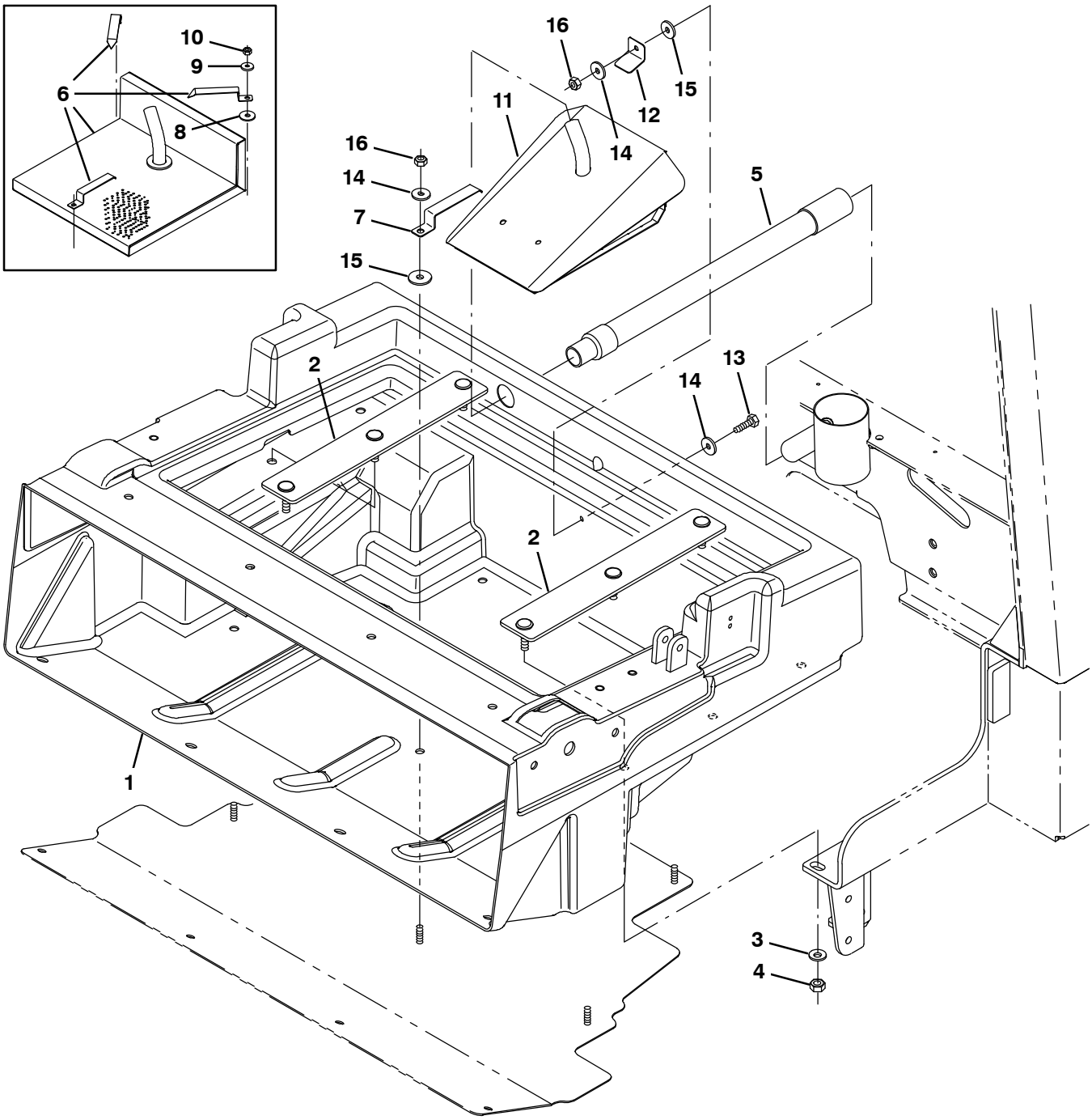

354431

Fig. 49 – Hopper and Debris Screen Group

Ref.	Part No.	Serial Number	Description	Qty.
1	1018300	(000000–)	Hopper, Debris, Rm–Hg, Trimmed	1
2	1018272	(000000–)	Bar, Mtg, Hppr	2
3	763042	(000000–)	Washer, Flat, Belleville, M10	6
4	08714	(000000–)	Nut, Hex, Lock, M10 X 1.5, Nl, Ss	6
5	1018239	(000000–)	Hose Assy, W/1cuff, 1.0d 09l 1.0/	1
6	9003774	(000000–002280)	Screen Kit, Hppr, Replmt [M20]	1
7	1044323	(002281–)	Spring, Flat, Retainer, Angled Screen	1
8	222268	(000000–002280)	Washer, Flat, 0.38b 1.25d .12, Neo	3
9	1017218	(000000–002280)	Washer, Flat, 0.32b 1.00d .12, Ss	3
10	08713	(000000–002280)	Nut, Hex, Lock, M8 X 1.25, Nl, Ss	3
11	1039163	(002281–)	Screen Wldt, Hppr	1
12	1039215	(002281–)	Angle, Retainer	1
13	09010	(002281–)	Screw, Hex, M8 X 1.25 X 25, Ss	1
14	1017218	(002281–)	Washer, Flat, 0.32b 1.00d .12, Ss	3
15	222268	(002281–)	Washer, Flat, 0.38b 1.25d .12, Neo	2
16	08713	(002281–)	Nut, Hex, Lock, M8 X 1.25, Nl, Ss	2

Fig. 50 – Hopper Cover and Dust Filter Group

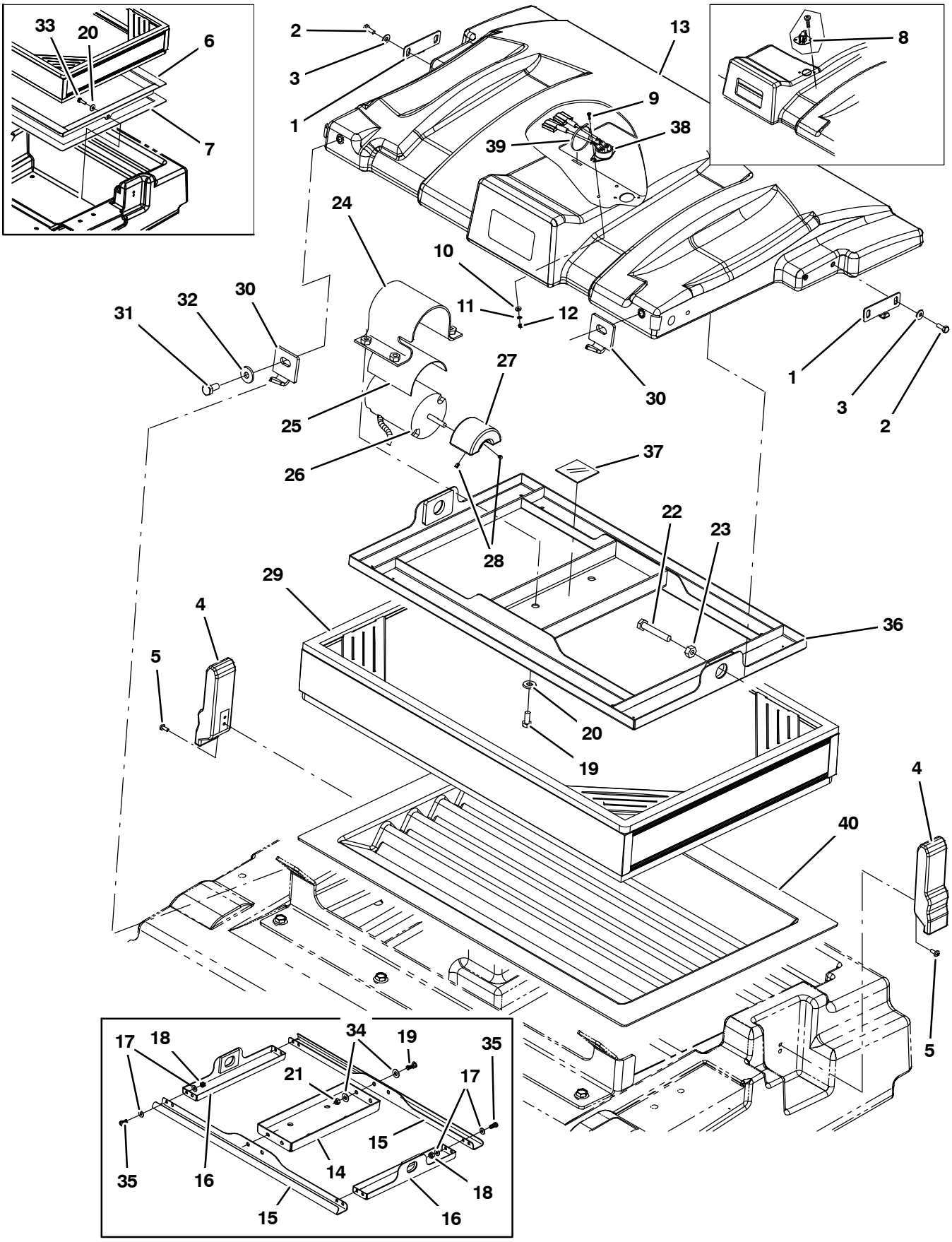

354432

Fig. 50 – Hopper Cover and Dust Filter Group

Ref.	Part No.	Serial Number	Description	Qty.
1	1041984	(000000–)	Bracket, Cover, Hppr	2
2	15678	(000000–)	Screw, Hex, M6 X 1.0 X 16, Ss	4
3	01684	(000000–)	Washer, Flat, 0.25, Ss	4
4	360824	(000000–)	Latch	2
5	09200	(000000–)	Screw, Pan, M5 X 0.8 X 12, Ss	4
6	1033591	(000000–002048)	Tray Wldt, Perma–filter (Replaced By none)	1
7	1015220	(000000–002048)	Seal, Afmkt, Ure, Adh, 0.38, 0.75w 08ft (Replaced By none)	1
8	9003444	(000000–002040)	Sensor Kit, Repair [Thermo–Sentry, M20]	1
9	06922	(000000–)	Screw, Pan, M3 X 0.5 X 20, 4.8	2
10	19064	(000000–)	Washer, Flat, #06	2
11	32975	(000000–)	Washer, Lock, Int, #06	2
12	01754	(000000–)	Nut, Hex, Std, M3 X 0.5, 8	2
13	1041006	(000000–)	Cover, Hppr	1
14	1018203	(000000–001356)	Plate, Shakr	1
15	360952	(000000–001356)	Plate, Shakr, Bar	2
16	1017944	(000000–001356)	Plate Wldt, Shakr, Side	2
17	32483	(000000–001356)	Washer, Flat, 0.25 Sae	16
18	08712	(000000–001356)	Nut, Hex, Lock, M6 X 1.0, Ss, Nl	8
19	09740	(000000–)	Screw, Hex, M8 X 1.25 X 20, Ss	8
20	01685	(000000–)	Washer, Flat, 0.31, Ss	6
21	08713	(000000–)	Nut, Hex, Lock, M8 X 1.25, Nl, Ss	4
22	06957	(000000–002040)	Screw, Hex, M8 X 1.25 X 60, 8.8	2
22	06963	(002041–)	Screw, Hex, M10 X 1.50 X 60, 8.8	2
23	39311	(000000–002040)	Nut, Hex, Std, M8 X 1.25	2
23	39312	(002041–)	Nut, Hex, Std, M10 X 1.50	2
24	1037671	(000000–)	Strap, Mtg, Motor, .124.00W	1
25	36658	(000000–)	Strip, Rbr, 0.06 04.00w 05.0l Neo/60	1
26	1041920	(000000–003408)	Motor, Ele [12vdc, Shaker]	1
26	1059542	(003409–)	Motor, Ele 12Vdc, Shakr	1
27	1049242	(000000–003408)	Weight, Eccentric	1
27	1053320	(003409–)	Weight, Eccentric	1
28	20634	(000000–)	Screw, Set, #10–24 X 0.25, Nl	2
29	1048295AM	(000000–)	Filter, Panl, Syn, 4.2 X 20.0 X 30.0	1
30	1018207	(000000–)	Bar, Mtg, Hppr Cover	2
31	09291	(000000–)	Screw, Hex, M10 X 1.5 X 20, Ss	2
32	1014563	(000000–)	Washer, Flat, 0.40b 1.12d .12, Ss	2
33	39277	(000000–)	Screw, Hex, M8 X 1.25 X 25, 8.8	2
34	01685	(000000–001356)	Washer, Flat, 0.31, Ss	8
35	15678	(000000–001356)	Screw, Hex, M6 X 1.0 X 16, Ss	8
36	1037235	(001357–)	Shaker Wldt	1
37	36661	(001357–)	Strip, Rbr, 0.06 01.00W 04.0L	1
38	1036611	(002041–003478)	Switch, Temp [160F]	1
38	1056298	(003479–)	Switch, Temp, Sealed, Nc	1
39	763116	(002041–)	Tie, Cable, Nyl, 15.3L . W 4.5 Max D	1
40	1037947	(002140–)	Tray, Perma–Filter	1

Fig. 51 – Hopper Bumper Group

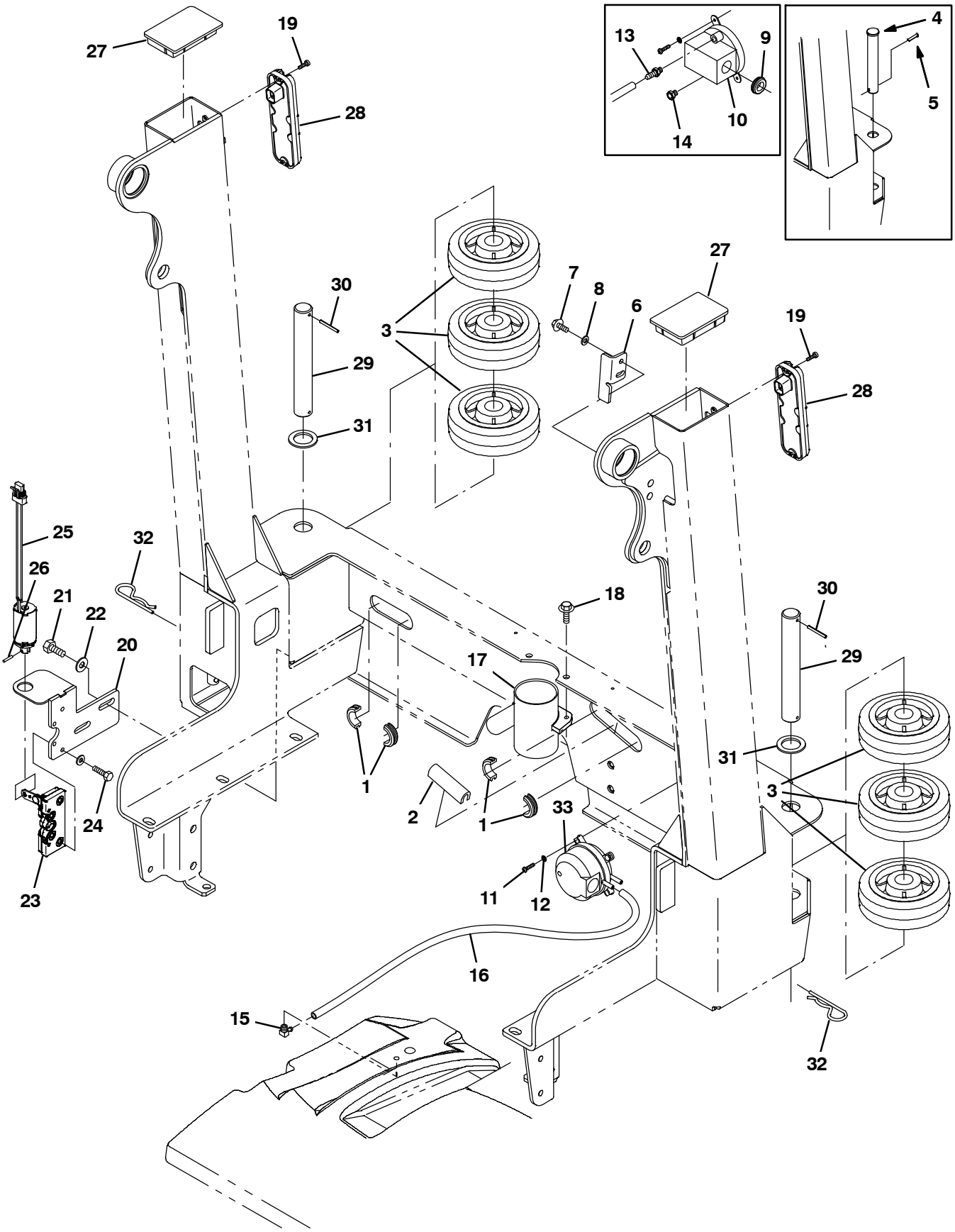

354433

Fig. 51 – Hopper Bumper Group

Ref.	Part No.	Serial Number	Description	Qty.
1	10632–1	(000000–007328)	Grommet, Rbr, 1.06id, F/1.4h, .19 Matl	2
1	10632–13	(007328–)	Grommet, Rbr, 1.50id, F/1.8h, .19 Matl	2
2	50646	(000000–)	Molding, Trim, Pvc,.18–.31 07.5l	1
3	1021047	(000000–)	Wheel, 06.0d 2.00w 1.19b, Gray Rbr	6
4	9006334	(000000–003062)	Pin Kit, Wheel, Ci [M20/T20/M30]	2
5	08171	(000000–003062)	Pin, Cotter, .156 X 2.00	2
6	1018240	(000000–)	Bracket, Mtg, Switch	1
7	361339	(000000–)	Screw, Hex, M6 X 1.0 X 16, Fmg	2
8	32483	(000000–)	Washer, Flat, 0.25 Sae	2
9	10632–4	(000000–003259)	Grommet, Rbr, 0.62id, F/0.9h, .06 Matl	1
10	39924	(000000–003259)	Switch, Press, Spdt 0008psi	1
11	12323	(000000–)	Screw, Pan, M4 X 0.7 X 20, Ss	2
12	02938	(000000–)	Washer, Lock, Int, #08, Ss	2
13	40607	(000000–003259)	Fitting, Brs, Str, Bm03/Pm02	1
14	82739	(000000–003259)	Fitting, Brs, Breather [02mp]	1
15	32183	(000000–)	Fitting, Brs, E90, Pm02/Bm03	1
16	1031575	(000000–)	Hose, Afmkt, Vacuum, 0.16id, 03ft	1
17	1036240	(000000–)	Tube, Vacuum	1
18	1037346	(000000–)	Screw, Hex, M8 X 1.25 X 25, 9.8, Sems	2
19	06928	(000000–)	Screw, Pan, M4 X 0.7 X 20, 4.8	4
20	1018280	(000000–)	Plate Wldt, Mtg, Solenoid	1
21	09028	(000000–007328)	Screw, Hex, M10 X 1.5 X 25, Ss	2
21	12309	(007328–)	Screw, Hex, M12 X 1.75 X 30, Ss	2
22	32492	(000000–007328)	Washer, Flat, 0.38 Std	2
22	32486	(007328–)	Washer, Flat, 0.50, Sae	2
23	21623	(000000–)	Latch	1
24	06944	(000000–)	Screw, Hex, M6 X 1.0 X 25, 8.8	4
25	1018274	(000000–)	Solenoid, Pull, 12vdc, Damper	1
26	20021	(000000–)	Pin, Roll, .125 D X 0.75l, .125/.129	1
27	1018293	(000000–)	Cap, Arm, Lift	2
28	1018208	(000000–)	Light, Tail, 12vdc	2
29	1053838	(003063–)	Pin, 30mmd X 215mml	2
30	23146	(003063–)	Pin, Roll, .187d X 1.62l, .187/.192	2
31	1062566	(003063–)	Washer, Flat, 1.26B 1.88D .13, Stl, Pl	2
32	34411	(003063–)	Pin, Cotter, Hair, 1.00d .178 Wir	2
33	1052885	(003260–)	Switch, Press, Adj [4–16 In Wtr]	1

Fig. 52 – Hopper Door Group (000000–003061)

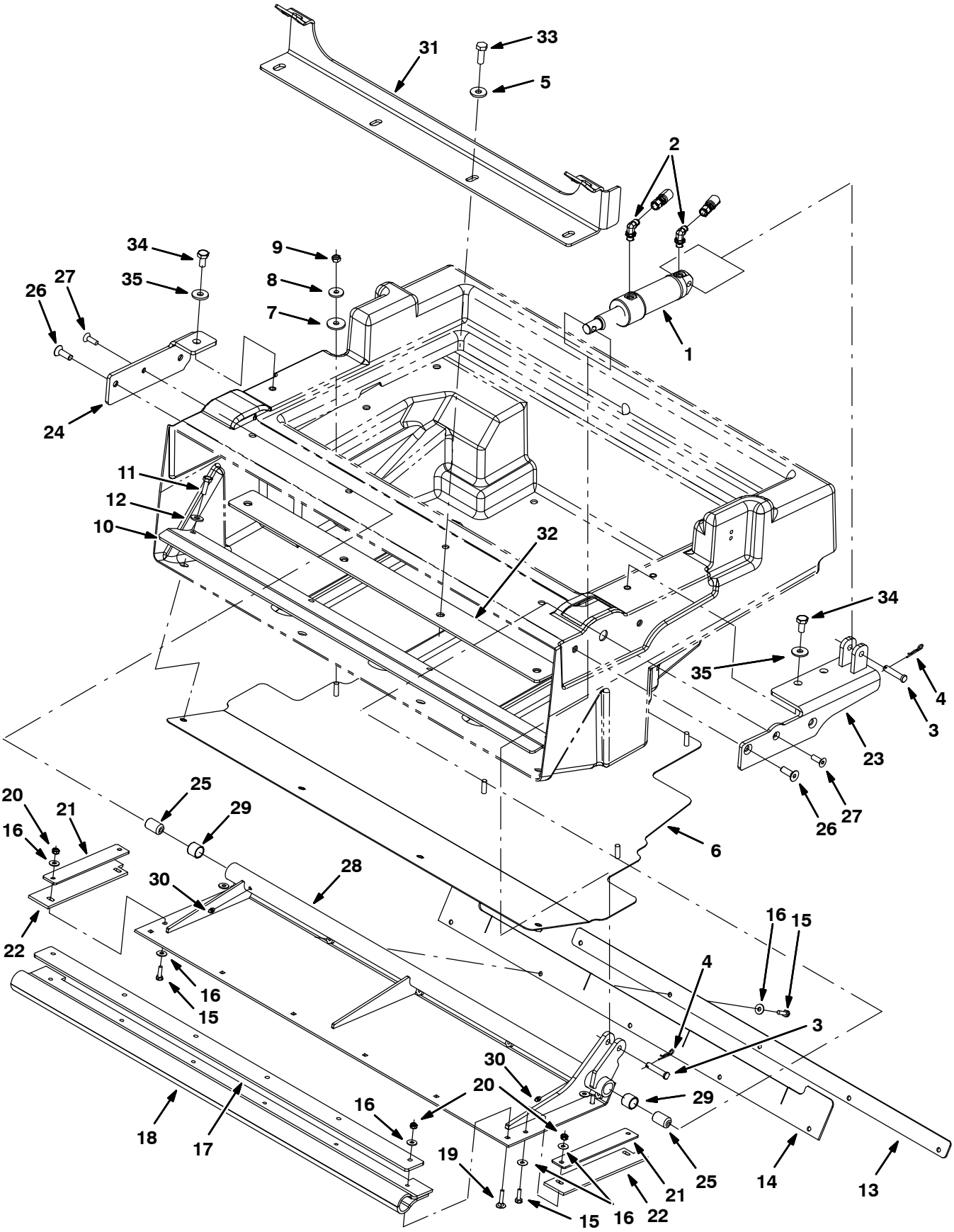

354434

Fig. 52 – Hopper Door Group (000000–003061)

Ref.	Part No.	Serial Number	Description	Qty.
1	1038115	(000000–003061)	Cylinder, Hyd, 1.5b 07.8l 02.75strk 2500	1
2	77097	(000000–003061)	Fitting, Hyd, E90, Jm04/Om04	2
3	17461	(000000–003061)	Pin, Clevis, 0.37d X 1.75l	2
4	08179	(000000–003061)	Pin, Cotter, .094 X 1.00	2
5	1014563	(000000–003061)	Washer, Flat, 0.40b 1.12d .12, Ss	4
6	1018237	(000000–003061)	Plate, Bottom, Hppr	1
7	222268	(000000–003061)	Washer, Flat, 0.38b 1.25d .12, Neo	2
8	1017218	(000000–003061)	Washer, Flat, 0.32b 1.00d .12, Ss	2
9	08713	(000000–003061)	Nut, Hex, Lock, M8 X 1.25, Nl, Ss	2
10	1018236	(000000–003061)	Bracket, Lip, Hppr	1
11	09010	(000000–003061)	Screw, Hex, M8 X 1.25 X 25, Ss	4
12	01685	(000000–003061)	Washer, Flat, 0.31, Ss	4
13	1018244	(000000–003061)	Strap, Door, Dump	1
14	1018245	(000000–003061)	Seal, Door, Dump	1
15	08716	(000000–003061)	Screw, Hex, M6 X 1.0 X 20, Ss	9
16	01684	(000000–003061)	Washer, Flat, 0.25, Ss	19
17	1018196	(000000–003061)	Plate, Retainer, Door, Dump	1
18	1018197	(000000–003061)	Seal, Door, Dump	1
19	379791	(000000–003061)	Bolt, Carriage, M06 X 1.0 X 30	6
20	08712	(000000–003061)	Nut, Hex, Lock, M6 X 1.0, Ss, Nl	10
21	1018194	(000000–003061)	Strap, Door, Dump, Side	2
22	1018199	(000000–003061)	Seal, Door, Dump, Side	2
23	1018210	(000000–003061)	Bracket Wldt, Pivot, Hppr Door, Lh	1
24	1018202	(000000–003061)	Bracket, Pivot, Hppr Door, Rh	1
25	1018193	(000000–003061)	Bushing, Pivot, Door	2
26	395825	(000000–003061)	Screw, Flt, M10 X 1.5 X 30, Ss 18–8	4
27	07810	(000000–003061)	Screw, Flt, M8 X 1.25 X 25, 10.9	2
28	1016463	(000000–003061)	Door Wldt, Hppr	1
29	64379	(000000–003061)	Bushing, Sleeve, 0.75b 0.88d 0.75l, Tef	2
30	07259	(000000–003061)	Fitting, Grease, Str Pm04 .47l	2
31	1044993	(000000–003061)	Bracket, Cover, Hopper	1
32	1018253	(000000–003061)	Bracket, Cover	1
33	12317	(000000–003061)	Screw, Hex, M10 X 1.5 X 30, Ss	4
34	09291	(000000–003061)	Screw, Hex, M10 X 1.5 X 20, Ss	3
35	1014563	(000000–003061)	Washer, Flat, 0.40b 1.12d .12, Ss	3

Fig. 53 – Hopper Door Group (003062–)

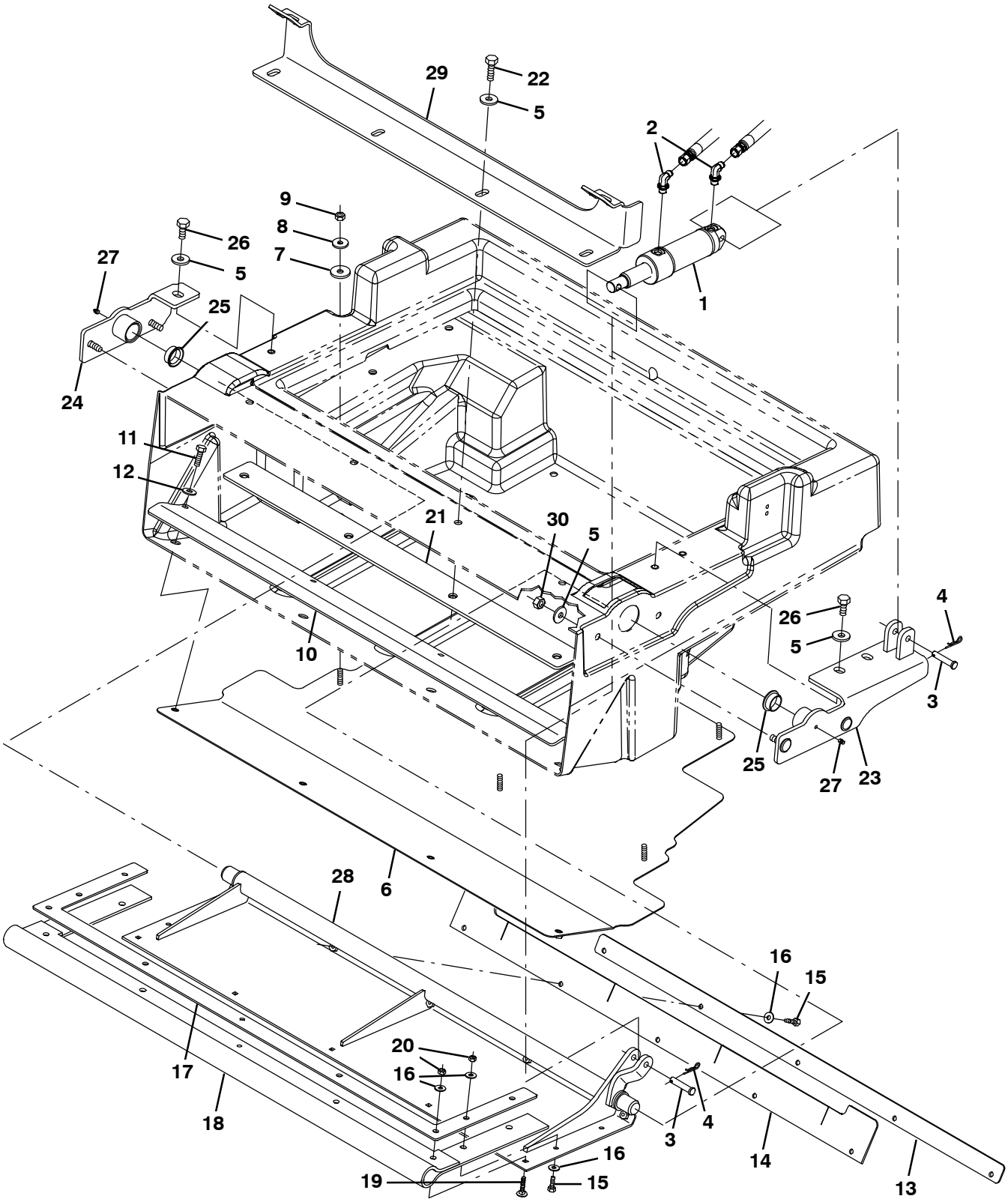

354434

Fig. 53 – Hopper Door Group (003062–)

Ref.	Part No.	Serial Number	Description	Qty.
1	1038115	(003062–)	Cylinder, Hyd, 1.5b 07.8l 02.75strk 2500	1
2	77097	(003062–)	Fitting, Hyd, E90, Jm04/Om04	2
3	17461	(003062–)	Pin, Clevis, 0.37d X 1.75l	2
4	08179	(003062–)	Pin, Cotter, .094 X 1.00	2
5	1014563	(003062–)	Washer, Flat, 0.40b 1.12d .12, Ss	11
6	1018237	(003062–)	Plate, Bottom, Hppr	1
7	222268	(003062–)	Washer, Flat, 0.38b 1.25d .12, Neo	2
8	1017218	(003062–)	Washer, Flat, 0.32b 1.00d .12, Ss	2
9	08713	(003062–)	Nut, Hex, Lock, M8 X 1.25, Nl, Ss	2
10	1018236	(003062–)	Bracket, Lip, Hppr	1
11	09010	(003062–)	Screw, Hex, M8 X 1.25 X 25, Ss	4
12	01685	(003062–)	Washer, Flat, 0.31, Ss	4
13	1039155	(003062–)	Strap, Door, Dump	1
14	1018245	(003062–)	Seal, Door, Dump	1
15	08716	(003062–)	Screw, Hex, M6 X 1.0 X 20, Ss	9
16	01684	(003062–)	Washer, Flat, 0.25, Ss	14
17	1039149	(003062–)	Plate, Retainer, Door, Dump	1
18	1039157	(003062–)	Seal, Door, Dump	1
19	379791	(003062–)	Bolt, Carriage, M06 X 1.0 X 30	5
20	08712	(003062–)	Nut, Hex, Lock, M6 X 1.0, Ss, Nl	9
21	1018253	(003062–)	Bracket, Cover	1
22	12317	(003062–)	Screw, Hex, M10 X 1.5 X 30, Ss	4
23	1038123	(003062–)	Bracket Wldt, Pivot, Hppr Door, Lh	1
24	1038134	(003062–)	Bracket Wldt, Pivot, Hppr, Rh	1
25	367313	(003062–)	Bushing, Flng, 1.00b 1.13d 0.50l	2
26	09291	(003062–)	Screw, Hex, M10 X 1.5 X 20, Ss	3
27	07259	(003062–)	Fitting, Grease, Str Pm04 .47l	2
28	1039124	(003062–)	Door Wldt, Hppr	1
29	1044993	(003062–)	Bracket, Cover, Hopper	1
30	08714	(003062–)	Nut, Hex, Lock, M10 X 1.5, Nl, Ss	4

Fig. 54 – Cylindrical Scrub Brush Drive Group, Left Side

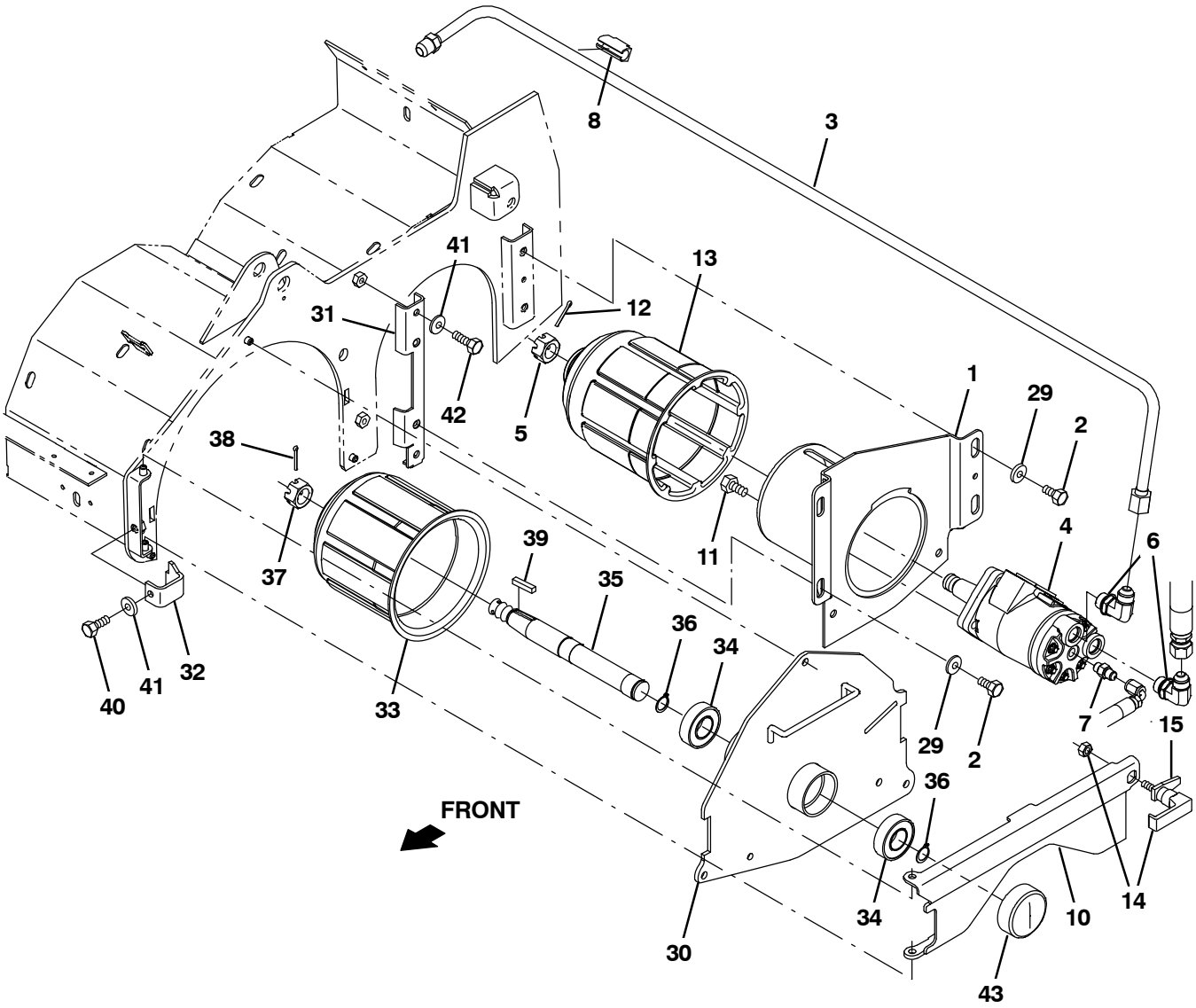

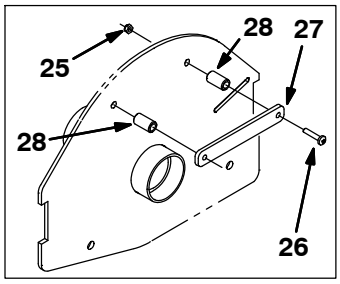

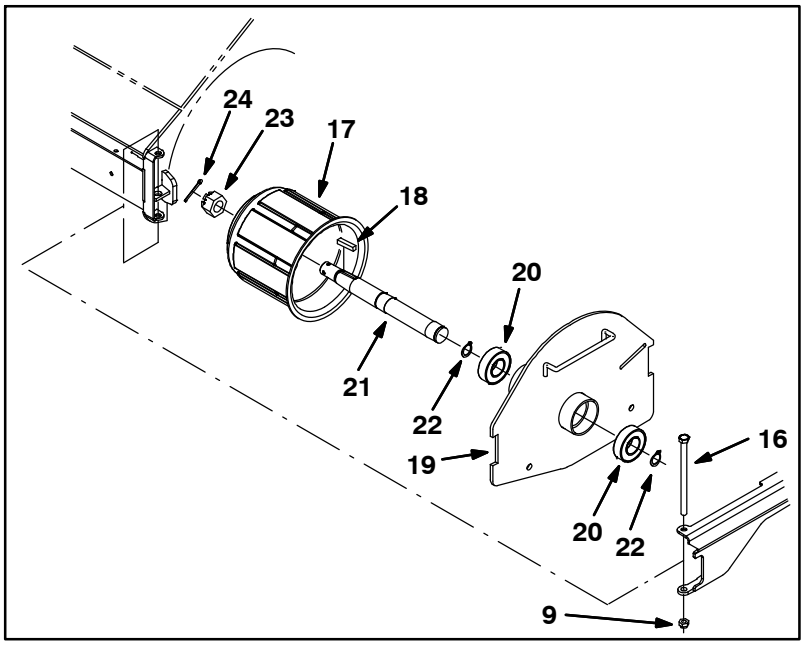

354435

Fig. 54 – Cylindrical Scrub Brush Drive Group, Left Side

	Ref.	Part No.	Serial Number	Description	Qty.
	1	1021019	(000000–)	Housing Wldt, Brush, Drive	1
	2	15675	(000000–)	Screw, Hex, M8 X 1.25 X 16, Ss	4
	3	1023617	(000000–)	Tube, Hyd, 08 Jf08/Jm08	1
	4	71729	(000000–004190)	Motor, Hyd, Gear, Int 04.5 Bi–Dir 1500 (See Breakdowns)	1
▽	4	1068811	(004191–)	Motor, Hyd, Gear, Int 04.5 Bi–Dir 1500	1
▲	5	39527	(000000–)	Nut, Hex, Sltd, .75–18	1
	6	44868	(000000–)	Fitting, Hyd, E90, Jm08/Om08	2
	7	55586	(000000–)	Fitting, Hyd, Str, Jm04/Om04	1
	8	1026080	(000000–)	Clamp, Hyd, 0.50d	1
	9	08713	(000000–004185)	Nut, Hex, Lock, M8 X 1.25, Nl, Ss	1
	10	1029964	(000000–)	Door Wldt, Brush	1
	11	01762	(000000–)	Screw, Hex, .38–16 X 0.75, Nl	4
	12	08175	(000000–)	Pin, Cotter, .125 X 1.25	1
	13	87631	(000000–004190)	Plug Wldt, Drive, Brush, Sweep	1
	13	1057643	(004191–)	Plug Wldt, Drive, Brush, Sweep	1
	14	65695	(000000–)	Latch	1
	15	1026352	(000000–)	Pawl, Str	1
	16	70563	(000000–004185)	Screw, Hex, M8 X 1.25 X 130, 8.8	1
▽		9006398	(000000–004185)	Idler Assy, Brush, Replmt [M20/T20, M30]	1
▲	17	25686	(000000–004185)	Plug Wldt, Drive, Brush	1
▲	18	00927	(000000–004185)	Key, Sq, 0.25 X 0.25, 1.25l	1
▲	19	1038258	(000000–004185)	Door Wldt, Brush, Idler	1
▲	20	13534	(000000–004185)	Bearing, Ball, 0.98b 2.05d 0.59w	2
▲	21	56078	(000000–004185)	Shaft, Brush, Idler	1
▲	22	09005	(000000–004185)	Ring, Retaining, Ext, 1.00d, Basic	2
▲	23	12295	(000000–004185)	Nut, Hex, Sltd, M20 X 2.5, 8	1
▲	24	08175	(000000–004185)	Pin, Cotter, .125 X 1.25	1
	25	09739	(000000–002167)	Nut, Hex, Lock, M5 X 0.8, Nl, Ss	2
	26	17185	(000000–002167)	Screw, Pan, M5 X 0.8 X 40, Ss	2
	27	1032743	(000000–002167)	Plate, Handle	1
	28	222496	(000000–002167)	Sleeve, P/M, 0.31b 0.50d 0.9l [430ss]	2
	29	32491	(000000–)	Washer, Flat, 0.31, Std	4
	30	1054857	(004186–)	Door Wldt, Brush, Idler	1
	31	1054575	(004186–)	Bracket, Sppt	1
	32	1054682	(004186–)	Bracket, Retainer, Lh	1
	33	25686	(004186–)	Plug Wldt, Drive, Brush	1
	34	13534	(004186–)	Bearing, Ball, 0.98b 2.05d 0.59w	2
	35	56078	(004186–)	Shaft, Brush, Idler	1
	36	09005	(004186–)	Ring, Retaining, Ext, 1.00d, Basic	2
	37	12295	(004186–)	Nut, Hex, Sltd, M20 X 2.5, 8	1
	38	08175	(004186–)	Pin, Cotter, .125 X 1.25	1
	39	00927	(004186–)	Key, Sq, 0.25 X 0.25, 1.25l	1
	40	09740	(004186–)	Screw, Hex, M8 X 1.25 X 20, Ss	1
	41	32491	(004186–)	Washer, Flat, 0.31, Std	3
	42	09010	(004186–)	Screw, Hex, M8 X 1.25 X 25, Ss	2
	43	1074807	(004186–)	Cap, Vinyl, 57mmid X 23mml	1

Fig. 55 – Cylindrical Scrub Brush Drive Group, Right Side

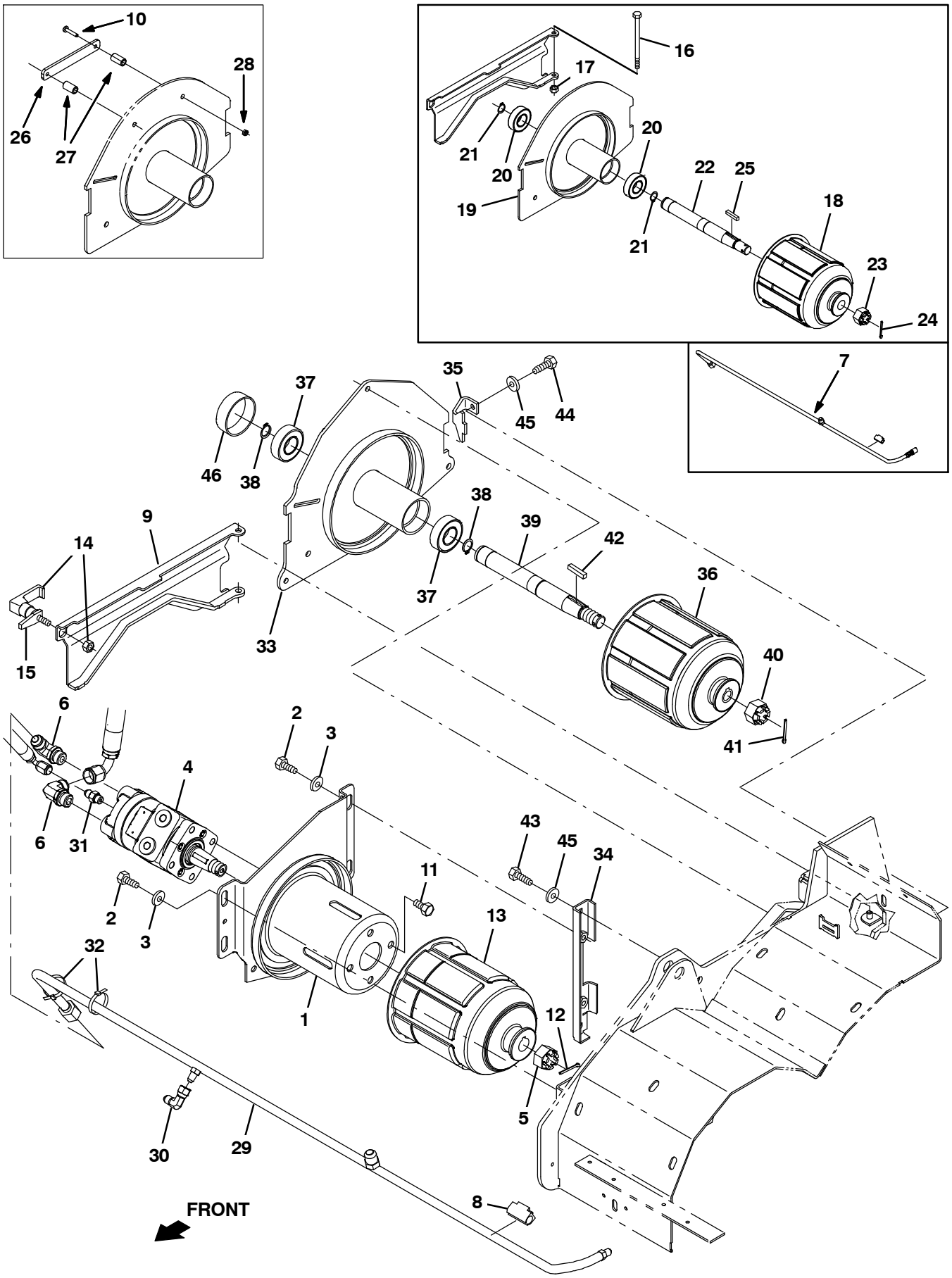

354436

Fig. 55 – Cylindrical Scrub Brush Drive Group, Right Side

	Ref.	Part No.	Serial Number	Description	Qty.
	1	1021019	(000000–)	Housing Wldt, Brush, Drive	1
	2	15675	(000000–)	Screw, Hex, M8 X 1.25 X 16, Ss	4
	3	32491	(000000–)	Washer, Flat, 0.31, Std	4
	4	71729	(000000–004190)	Motor, Hyd, Gear, Int 04.5 Bi–Dir 1500 (See Breakdowns)	1
▽	4	1068811	(004191–)	Motor, Hyd, Gear, Int 04.5 Bi–Dir 1500	1
▲	5	39527	(000000–)	Nut, Hex, Sltd, .75–16	1
	6	44868	(000000–)	Fitting, Hyd, E90, Jm08/Om08	2
	7	9006386	(000000–003056)	Tube Kit, Hyd, Case Drain [M20/T20]	1
	8	1026080	(000000–)	Clamp, Hyd, 0.50d	1
	9	1029964	(000000–)	Door Wldt, Brush	1
	10	17185	(000000–002167)	Screw, Pan, M5 X 0.8 X 40, Ss	2
	11	01762	(000000–)	Screw, Hex, .38–16 X 0.75, Nl	4
	12	08175	(000000–)	Pin, Cotter, .125 X 1.25	1
	13	87631	(000000–004190)	Plug Wldt, Drive, Brush, Sweep	1
	13	1057643	(004191–)	Plug Wldt, Drive, Brush, Sweep	1
	14	65695	(000000–)	Latch	1
	15	1026352	(000000–)	Pawl, Str	1
	16	70563	(000000–004185)	Screw, Hex, M8 X 1.25 X 130, 8.8	1
	17	08713	(000000–004185)	Nut, Hex, Lock, M8 X 1.25, Nl, Ss	1
▽		9006398	(000000–004185)	Idler Assy, Brush, Replmt [M20/T20, M30]	1
▲	18	25686	(000000–004185)	Plug Wldt, Drive, Brush	1
▲	19	1038258	(000000–004185)	Door Wldt, Brush, Idler	1
▲	20	13534	(000000–004185)	Bearing, Ball, 0.98b 2.05d 0.59w	2
▲	21	09005	(000000–004185)	Ring, Retaining, Ext, 1.00d, Basic	2
▲	22	56078	(000000–004185)	Shaft, Brush, Idler	1
▲	23	12295	(000000–004185)	Nut, Hex, Sltd, M20 X 2.5, 8	1
▲	24	08175	(000000–004185)	Pin, Cotter, .125 X 1.25	1
▲	25	00927	(000000–004185)	Key, Sq, 0.25 X 0.25, 1.25l	1
	26	1032743	(000000–002167)	Plate, Handle	1
	27	222496	(000000–002167)	Sleeve, P/M, 0.31b 0.50d 0.9l [430ss]	2
	28	09739	(000000–002167)	Nut, Hex, Lock, M5 X 0.8, Nl, Ss	2
	29	1055139	(003057–	Tube, Hyd, Brush Return, W/ Cd [M20/T20]	1
	30	39210	(003057–	Fitting, Hyd, E90, Jf04/Jm04	1
	31	55586	(003057–	Fitting, Hyd, Str, Jm04/Om04	1
	32	49266	(003057–	Tie, Cable, Nyl, 07.3l .19w 1.8 Max D	2
	33	1054857	(004186–)	Door Wldt, Brush, Idler	1
	34	1054575	(004186–)	Bracket, Sppt	1
	35	1054610	(004186–)	Bracket, Retainer, Rh	1
	36	25686	(004186–)	Plug Wldt, Drive, Brush	1
	37	13534	(004186–)	Bearing, Ball, 0.98b 2.05d 0.59w	2
	38	09005	(004186–)	Ring, Retaining, Ext, 1.00d, Basic	2
	39	56078	(004186–)	Shaft, Brush, Idler	1
	40	12295	(004186–)	Nut, Hex, Sltd, M20 X 2.5, 8	1
	41	08175	(004186–)	Pin, Cotter, .125 X 1.25	1
	42	00927	(004186–)	Key, Sq, 0.25 X 0.25, 1.25l	1
	43	09010	(004186–)	Screw, Hex, M8 X 1.25 X 25, Ss	2
	44	09740	(004186–)	Screw, Hex, M8 X 1.25 X 20, Ss	1
	45	32491	(004186–)	Washer, Flat, 0.31, Std	3
	46	1074807	(004186–)	Cap, Vinyl, 57mmid X 23mml	1

Fig. 56 – Cylindrical Scrub Brush Head Lift Group

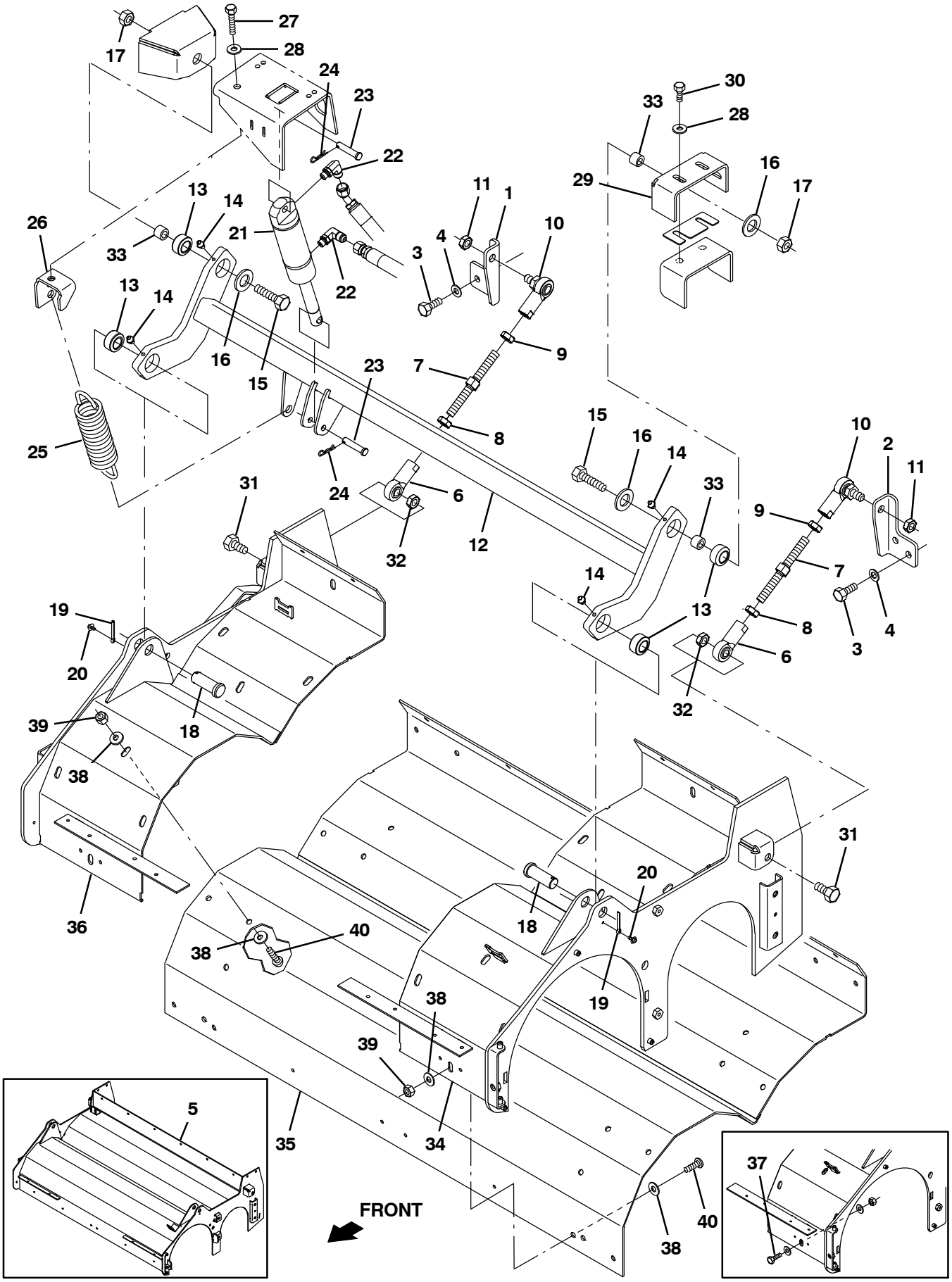

354437

Fig. 56 – Cylindrical Scrub Brush Head Lift Group

Ref.	Part No.	Serial Number	Description	Qty.
1	1030910	(000000–)	Bracket, Mtg, Scb Head, Rh	1
2	1030911	(000000–)	Bracket, Mtg, Scb Head, Lh	1
3	09028	(000000–)	Screw, Hex, M10 X 1.5 X 25, Ss	4
4	32485	(000000–)	Washer, Flat, 0.38 Sae	4
5	1020002	(000000–004185)	Housing Wldt, Swp, Scb	1
6	67555	(000000–)	Rod–End, .50–20rh Fem 0.50b	2
7	1014705	(000000–)	Rod, Thrd, 2 End, .50–20 04.9l, Rh / Lh	2
8	48985	(000000–)	Nut, Hex, Jam, .50–20	2
9	71369	(000000–)	Nut, Hex, Jam, .50–20, Lh	2
10	382099	(000000–)	Rod–End, .50–20lh Fem 0.50–20stud	2
11	51824	(000000–)	Nut, Hex, Lock, .50–20, Nl, Thin	2
12	1020003	(000000–)	Tube Wldt, Torque	1
13	42120	(000000–)	Bearing, Self Align, 0.75b 1.25d	4
14	07259	(000000–)	Fitting, Grease, Str Pm04 .47l	4
15	06969	(000000–)	Screw, Hex, M12 X 1.75 X 40, 8.8	2
16	41619	(000000–)	Washer, Flat, 0.56b 1.38d .11, Ss	2
17	09741	(000000–)	Nut, Hex, Lock, M12 X 1.75, Nl, Ss	2
18	04733–12	(000000–)	Pin, Clevis, 0.75d X 2.00l	2
19	08236	(000000–)	Pin, Cotter, .156 X 1.25	2
20	223198	(000000–)	Screw, Hex, M5 X 0.8 X 10, Fmg	2
21	1038137	(000000–)	Cylinder, Hyd, 1.5b 07.8l 02.80strk 2500	1
22	77098	(000000–)	Fitting, Hyd, E90, Jm06/Om04	2
23	17461	(000000–)	Pin, Clevis, 0.37d X 1.75l	2
24	86866	(000000–)	Pin, Cotter, Hair, 0.38d .072 Wir	2
25	1042686	(000000–)	Spring, Extn, 2.00od 0.25wir 07.5l	1
26	1027810	(000000–)	Bracket, Mtg, Spring	1
27	763090	(000000–)	Screw, Hex, M8 X 1.25 X 60, Fl	1
28	32491	(000000–)	Washer, Flat, 0.31, Std	4
29	1019146	(000000–)	Bracket, Mtg, Lift, Scb Head	1
30	09740	(000000–)	Screw, Hex, M8 X 1.25 X 20, Ss	3
31	39811	(000000–)	Screw, Hex, .50–13 X 1.50, 5	2
32	36644	(000000–)	Nut, Hex, Lock, .50–13, Nl, Thin	2
33	1025100	(000000–)	Sleeve, P/M, 0.47b 0.75d 0.5l [430ss]	3
34	1052342	(004186–)	Bracket Wldt, Brush Wrap, Lh	1
35	1069562	(004186–)	Plate Wldt, Wrap, Brush	1
36	1052124	(004186–)	Bracket Wldt, Brush Wrap Mtg, Rh	1
37	09740	(004186–007371)	Screw, Hex, M8 X 1.25 X 20, Ss	10
38	32491	(004186–)	Washer, Flat, 0.31, Std	20
39	08713	(004186–)	Nut, Hex, Lock, M8 X 1.25, Nl, Ss	10
40	223470	(007372–)	Screw, Btn, M8 X 1.25 X 25, Ss	10

Fig. 57 – Cylindrical Brush Head Skirt Group

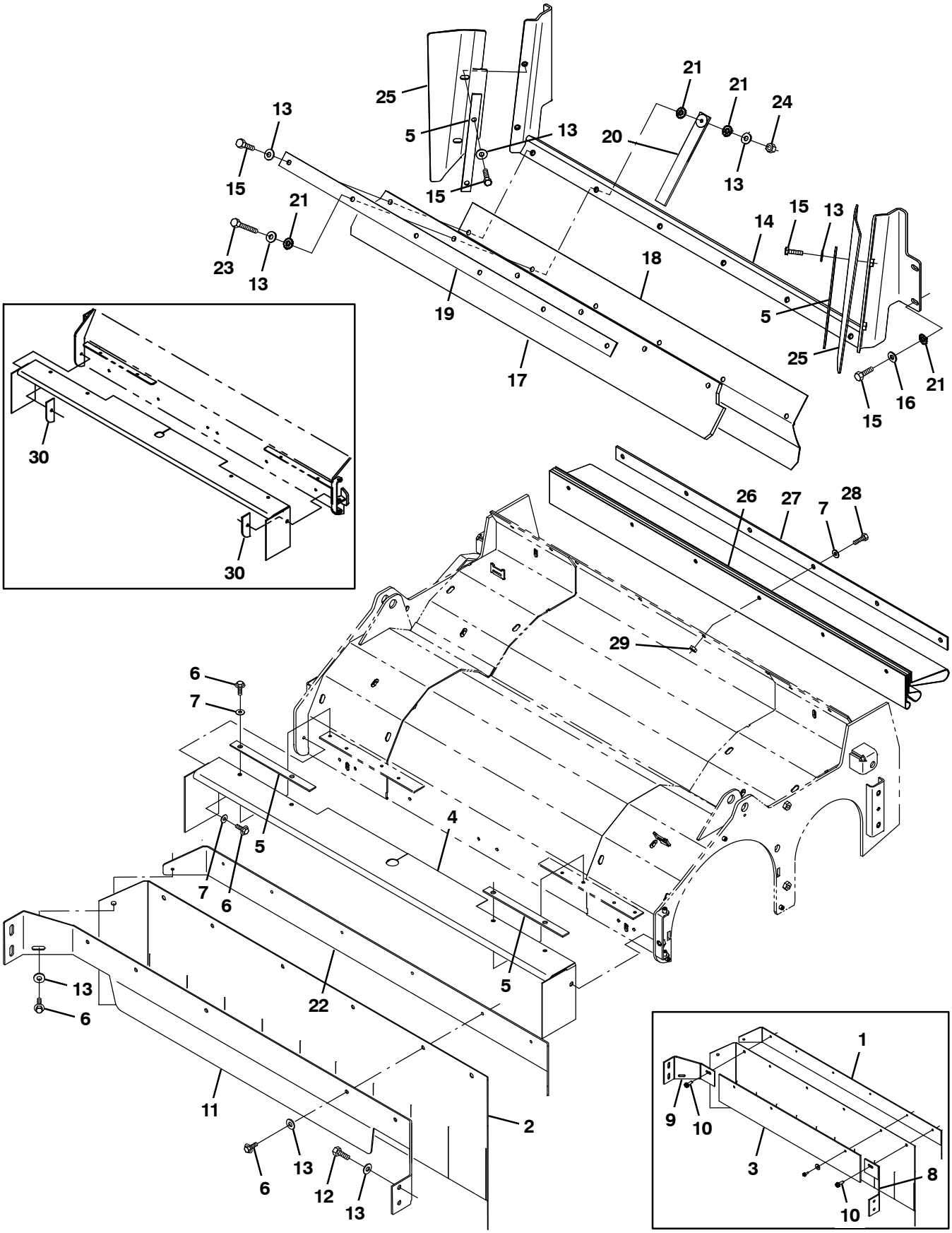

354438

Fig. 57 – Cylindrical Brush Head Skirt Group

Ref.	Part No.	Serial Number	Description	Qty.
1	1020208	(000000–002275)	Plate, Skirt, Front	1
2	1020166	(000000–)	Skirt, Neo, .06, 12.00w 45.88l, 07 Hole	1
3	1020207	(000000–002275)	Retainer, Skirt, Front	1
4	1022363	(000000–)	Skirt, Neo, .06, 07.63w 51.52l, 11 Hole	1
5	1022003	(000000–)	Retainer, Skirt	4
6	361339	(000000–)	Screw, Hex, M6 X 1.0 X 16, Fmg	13
7	01684	(000000–)	Washer, Flat, 0.25, Ss	12
8	1024570	(000000–002275)	Bracket, Mtg, Skirt	1
9	1020163	(000000–002275)	Bracket, Mtg, Skirt	1
10	76099	(000000–002275)	Screw, Hex, M8 X 1.25 X 25, Fmg	4
11	1039396	(002276–)	Bracket, Mtg, Skirt	1
12	09740	(000000–)	Screw, Hex, M8 X 1.25 X 20, Ss	4
13	01685	(000000–)	Washer, Flat, 0.31, Ss	22
14	1022179	(000000–)	Bracket Wldt, Flap, Recirculation	1
15	09010	(000000–)	Screw, Hex, M8 X 1.25 X 25, Ss	13
16	32491	(000000–)	Washer, Flat, 0.31, Std	4
17	1022007	(000000–)	Skirt, Rbr, .37, 04.50w 40.94l, 06 Hole	1
18	1022009	(000000–)	Skirt, Neo, .06, 06.38w 40.86l, 06 Hole	1
19	1020828	(000000–)	Strip, Flap, Recirculation	1
20	1028852	(000000–)	Strap, Static, Afmkt	1
21	41141	(000000–)	Washer, Lock, Int–Ext, 0.31	7
22	1040018	(002276–)	Plate, Skirt, Front	1
23	33401	(000000–)	Screw, Hex, M8 X 1.25 X 50, Ss, Fl	1
24	08713	(000000–)	Nut, Hex, Lock, M8 X 1.25, Nl, Ss	1
25	1022165	(000000–)	Skirt, Neo, .12, 05.39w 14.01l, 02 Sl	2
26	1026108	(000000–)	Skirt, Neo, .06, 26.99w 40.55l, 36 Hole	1
27	1020828	(000000–)	Strip, Flap, Recirculation	1
28	07805	(000000–)	Screw, Hex, M6 X 1.0 X 35, Ss	6
29	08712	(000000–)	Nut, Hex, Lock, M6 X 1.0, Ss, Nl	6
30	1022359	(000000–001284)	Plate, Mtg, Skirt, Scb Head (Replaced by None)	2

Fig. 58 – Squeegee Lift Group, Rear

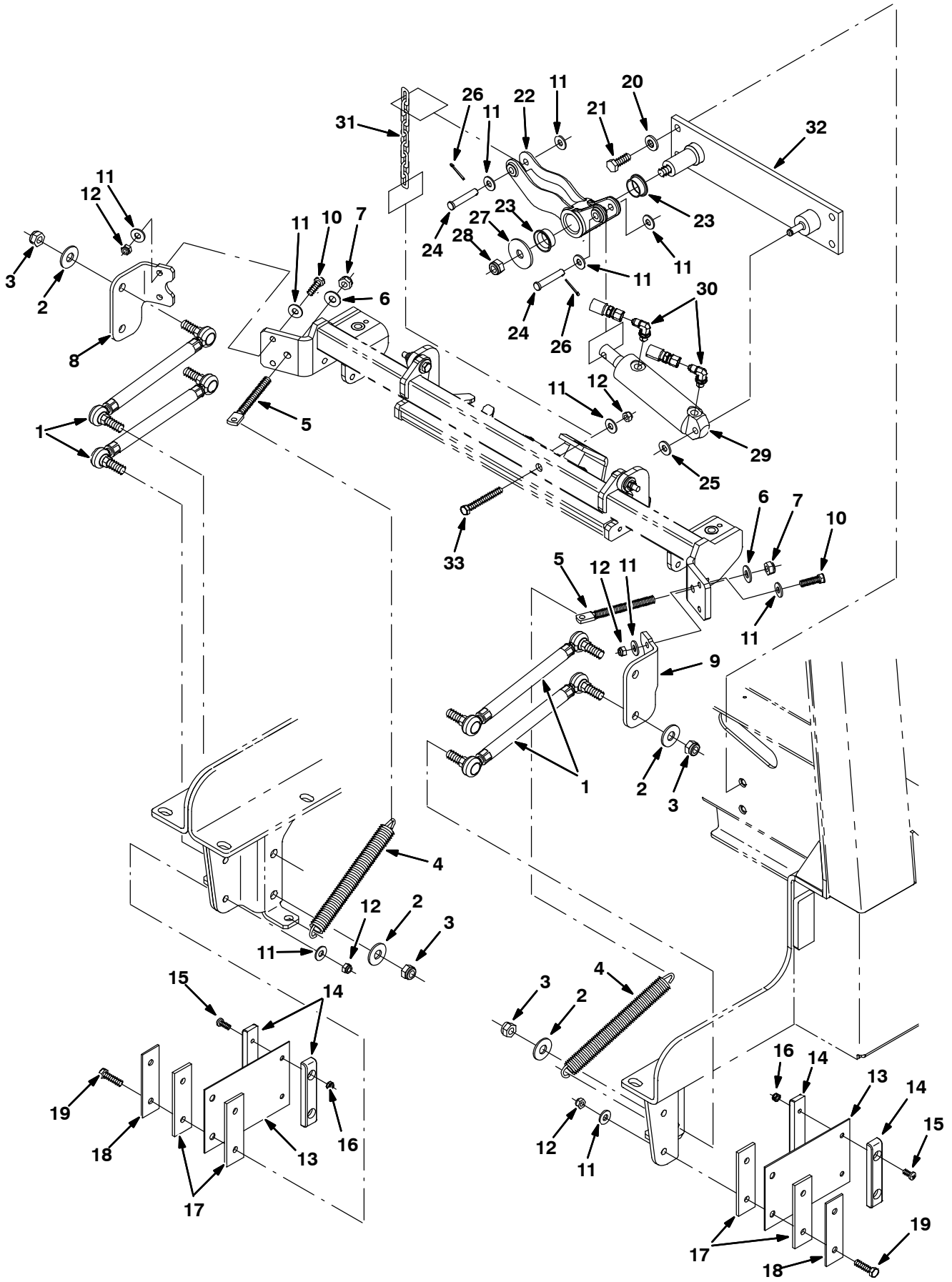

354439

Fig. 58 – Squeegee Lift Group, Rear

Ref.	Part No.	Serial Number	Description	Qty.
1	1026007	(000000–)	Link Assy, Rod–End, M12	4
2	41619	(000000–)	Washer, Flat, 0.56b 1.38d .11, Ss	8
3	09741	(000000–)	Nut, Hex, Lock, M12 X 1.75, Nl, Ss	8
4	46785–1	(000000–)	Spring, Extn, 0.88od X 0.14wir, 9.0l	2
5	386847	(000000–)	Bolt, Eye, M10 X 1.50 X 064mm, 07.10 Eye	2
6	01686	(000000–)	Washer, Flat, 0.44b 1.00d .08, Ss	2
7	08714	(000000–)	Nut, Hex, Lock, M10 X 1.5, Nl, Ss	2
8	1022372	(000000–)	Angle, Rh	1
9	1022442	(000000–)	Angle, Lh	1
10	09010	(000000–)	Screw, Hex, M8 X 1.25 X 25, Ss	4
11	01685	(000000–)	Washer, Flat, 0.31, Ss	15
12	08713	(000000–)	Nut, Hex, Lock, M8 X 1.25, Nl, Ss	9
13	71204	(000000–)	Spring, Flt, 0.08th, 4.50w X 07.0l	2
14	1024648	(000000–)	Block, Centering	4
15	367770	(000000–)	Screw, Pan, M6 X 1.0 X 16, Ss	4
16	08712	(000000–)	Nut, Hex, Lock, M6 X 1.0, Ss, Nl	4
17	1024641	(000000–)	Spacer, Pad, Rbr	4
18	1024703	(000000–)	Retainer, Spring	2
19	09023	(000000–)	Screw, Hex, M8 X 1.25 X 35, Ss, Fl	4
20	41187	(000000–)	Washer, Flat, Belleville, .38	4
21	12317	(000000–)	Screw, Hex, M10 X 1.5 X 30, Ss	4
22	1025680	(000000–)	Bellcrank, Lift, Sqge	1
23	367313	(000000–)	Bushing, Flng, 1.00b 1.13d 0.50l	2
24	29584	(000000–)	Pin, Clevis, 0.37d X 2.00l	2
25	23524–1	(000000–)	Ring, Retaining, Ext, 0.38d, [Selflock]	1
26	08179	(000000–)	Pin, Cotter, .094 X 1.00	2
27	04414	(000000–)	Washer, Flat, 0.53b 1.88d .12, Stl, Pl	1
28	09741	(000000–)	Nut, Hex, Lock, M12 X 1.75, Nl, Ss	1
29	1038137	(000000–)	Cylinder, Hyd, 1.5b 07.8l 02.80strk 2500	1
30	77097	(000000–)	Fitting, Hyd, E90, Jm04/Om04	2
31	1023779	(000000–)	Chain, Str, 4/0, 08 Link	1
32	1021609	(000000–)	Plate Wldt, Lift, Sqge	1
33	06957	(002102–)	Screw, Hex, M8 X 1.25 X 60, 8.8	1

Fig. 59 – Squeegee Group, Rear

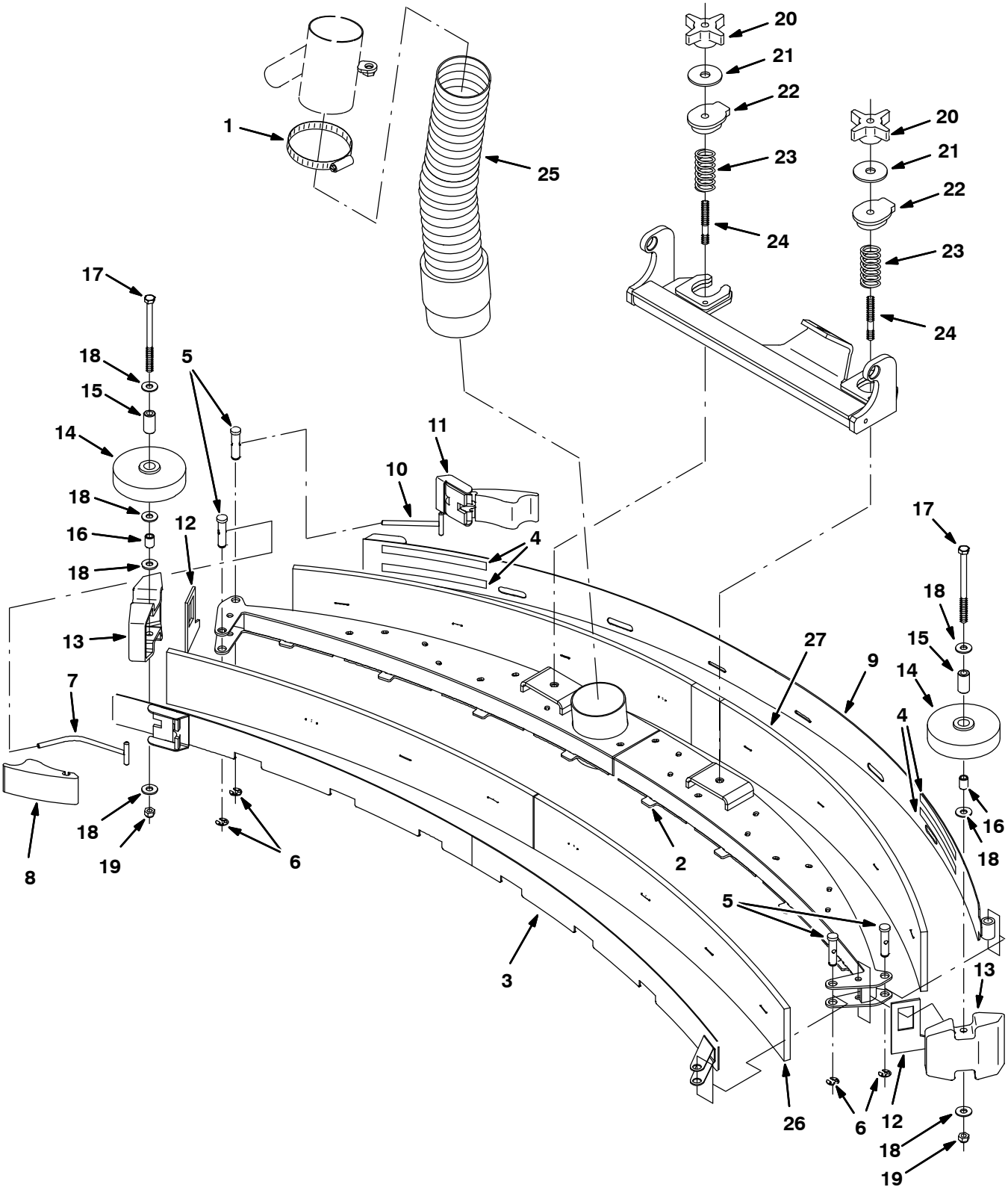

354440

Fig. 59 – Squeegee Group, Rear

	Ref.	Part No.	Serial Number	Description	Qty.
	1	43555	(000000–)	Clamp, Hose, Wormdrive, 2.50–3.50d, .50w	1
▽		9004493	(000000–)	Squeegee Kit, Rear, Replmt [M20/T20]	1
▲	2	1022831	(000000–)	Squeegee Wldt, Rear	1
▲	3	1023239	(000000–)	Clamp Wldt, Front	1
▲	4	03495	(000000–)	Strip, Non–Slip, 0.50w 06.0l	4
▲	5	21603	(000000–)	Pin, Grvd, 0.43d 01.8l [303ss]	4
▲	6	24555	(000000–)	Ring, Retaining, Ext, 0.38d, [E–Ring]	4
▲	7	386298	(000000–)	Pin Wldt, Front	1
▲	8	21601	(000000–)	Cam	1
▲	9	1028374	(000000–)	Clamp Wldt, Rear	1
▲	10	21606	(000000–)	Bar Wldt, Retainer, Sqge, Rear	1
▲	11	21602	(000000–)	Cam, Rear	1
▲	12	83874	(000000–)	Gasket, Sqge	2
▲	13	386264	(000000–)	Bumper, Sqge	2
▲	14	363162	(000000–)	Wheel, 4.0d 0.89w 0.64b	2
▲	15	363301	(000000–)	Sleeve, P/M, 0.34b 0.63d 1.2l, Bnz	2
▲	16	80395	(000000–)	Sleeve, P/M, 0.31b 0.50d 0.7l [430ss]	2
▲	17	364441	(000000–)	Screw, Hex, M8 X 1.25 X 110, Ss	2
▲	18	01685	(000000–)	Washer, Flat, 0.31, Ss	10
▲	19	08713	(000000–)	Nut, Hex, Lock, M8 X 1.25, Nl, Ss	2
	20	370100	(000000–)	Knob, Star, 2.80d 4ear 1.1l .31–18 Pyp	2
	21	04414	(000000–)	Washer, Flat, 0.53b 1.88d .12, Stl, Pl	2
	22	387433	(000000–)	Ring, Mtg, Sqge, .50l	2
	23	387500	(000000–)	Spring, Cmpr, 0.9od .042wir 02.0l	2
	24	387237	(000000–)	Stud, .31–18 2.75l M8 X 1.25, Ss	2
	25	1021511	(000000–)	Hose, Vacuum, 19.0l	1
	26	1017868	(000000–)	Blade, Sqge, Front, 49.58l [Linard]	1
	26	1027719	(000000–)	Blade, Sqge, Front, 49.58l Ure (Option)	1
	27	1031331	(000000–)	Blade, Sqge, Rear, Linatex	1
	27	1031945	(000000–)	Blade, Sqge, Rear, 53.78l Ure (Option)	1

Fig. 60 – Squeegee Linkage Group, Rear

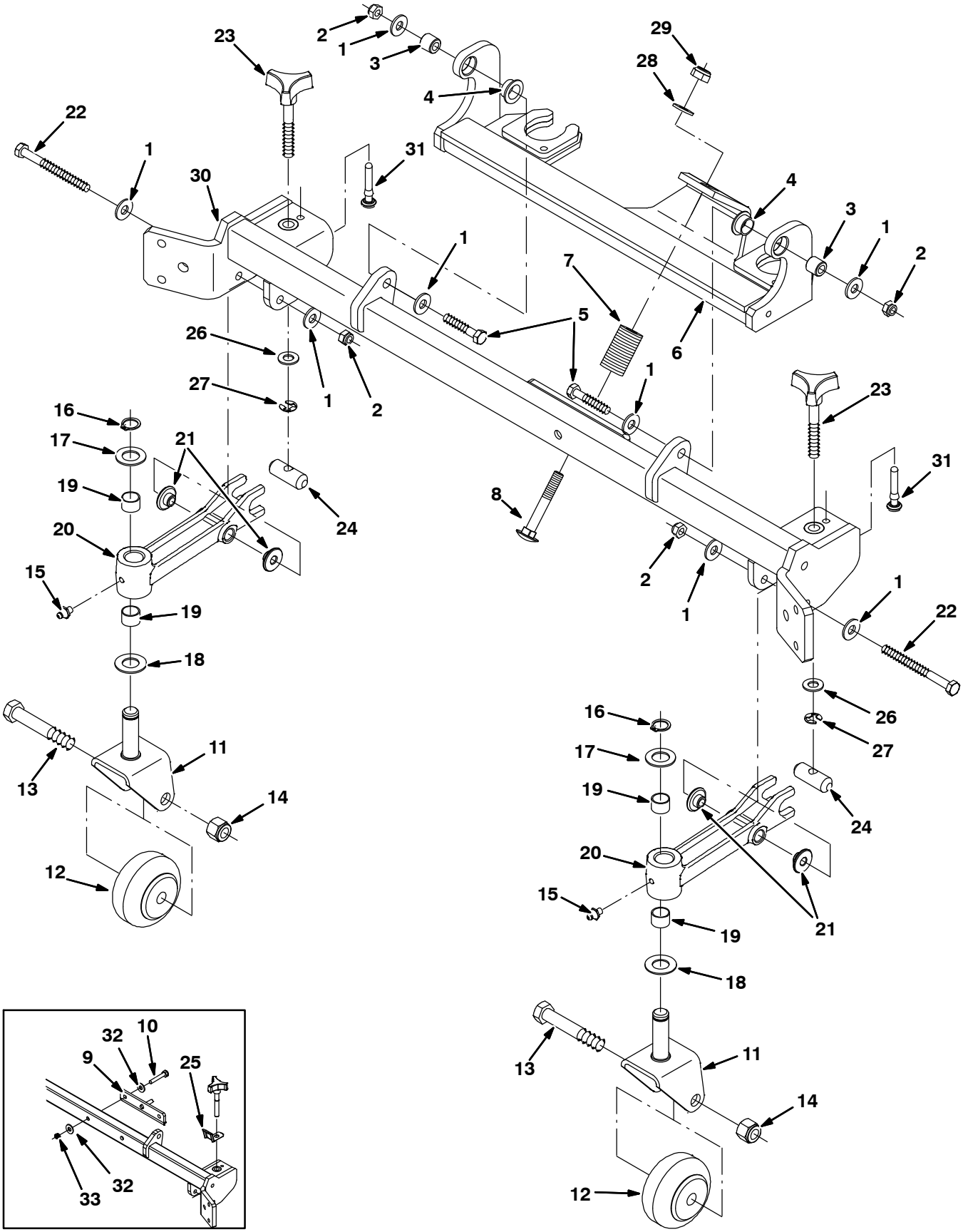

354441

Fig. 60 – Squeegee Linkage Group, Rear

Ref.	Part No.	Serial Number	Description	Qty.
1	01685	(000000–)	Washer, Flat, 0.31, Ss	6
2	08713	(000000–)	Nut, Hex, Lock, M8 X 1.25, Nl, Ss	4
3	80409	(000000–)	Sleeve, P/M, 0.34b 0.63d 0.6l, Bnz	2
4	25735	(000000–)	Bushing, Flng, 0.63b 0.75d 0.38l	2
5	222505	(000000–)	Screw, Hex, M8 X 1.25 X 45, Ss	2
6	1023476	(000000–)	Bracket Wldt, Mtg, Sqge	1
7	65180	(000000–)	Spring, Dsl, 1.00od 0.50id 1.7l	1
8	1025601	(000000–)	Bolt, Carriage, M10 X 1.5 X 70	1
9	1034147	(000000–002101)	Pin Wldt, Lift (Replaced by 9003478)	1
10	222505	(000000–002101)	Screw, Hex, M8 X 1.25 X 45, Ss	2
11	1021404	(000000–)	Bracket Wldt, Mtg, Caster	2
12	20833	(000000–)	Wheel, 3.0d 1.38w 0.50b	2
13	81952	(000000–)	Screw, Hex, .50–13 X 3.00, Ss18–8	2
14	02931	(000000–)	Nut, Hex, Lock, .50–13, Nl, Ss	2
15	07259	(000000–)	Fitting, Grease, Str Pm04 .47l	2
16	33373	(000000–)	Ring, Retaining, Ext, 0.62d, Hd	2
17	63468	(000000–)	Washer, Flat, 0.69b 1.19d .06, Stl, Pl	2
18	64425	(000000–)	Washer, Thrust, 0.61b 1.25d .06, Fgl	2
19	07449	(000000–)	Bushing, Sleeve, 0.62b 0.72d 0.50l, Fgl	4
20	1025460	(000000–)	Caster, Pivot	2
21	80950	(000000–)	Bushing, Flng, 0.32b 0.50d 0.24l, Bnz	4
22	39281	(000000–)	Screw, Hex, M8 X 1.25 X 90, 8.8	2
23	1021546	(000000–)	Knob Assy, Star, 1.12d 3ear M10	2
24	1021497	(000000–)	Pin, 0.63d 01.8l, 1/M10h, 2cham	2
25	1022545	(000000–002049)	Spring, Keeper	2
26	32485	(000000–)	Washer, Flat, 0.38 Sae	2
27	24555	(000000–)	Ring, Retaining, Ext, 0.38d, [E–Ring]	2
28	1014563	(000000–)	Washer, Flat, 0.40b 1.12d .12, Ss	1
29	08714	(000000–)	Nut, Hex, Lock, M10 X 1.5, Nl, Ss	1
30	1034149	(000000–)	Crossmember Wldt [M20]	1
31	1035727	(002050–)	Stop, Rotation	2
32	01685	(000000–002101)	Washer, Flat, 0.31, Ss	4
33	08713	(000000–002101)	Nut, Hex, Lock, M8 X 1.25, Nl, Ss	2

Fig. 61 – Squeegee Group, Right Side

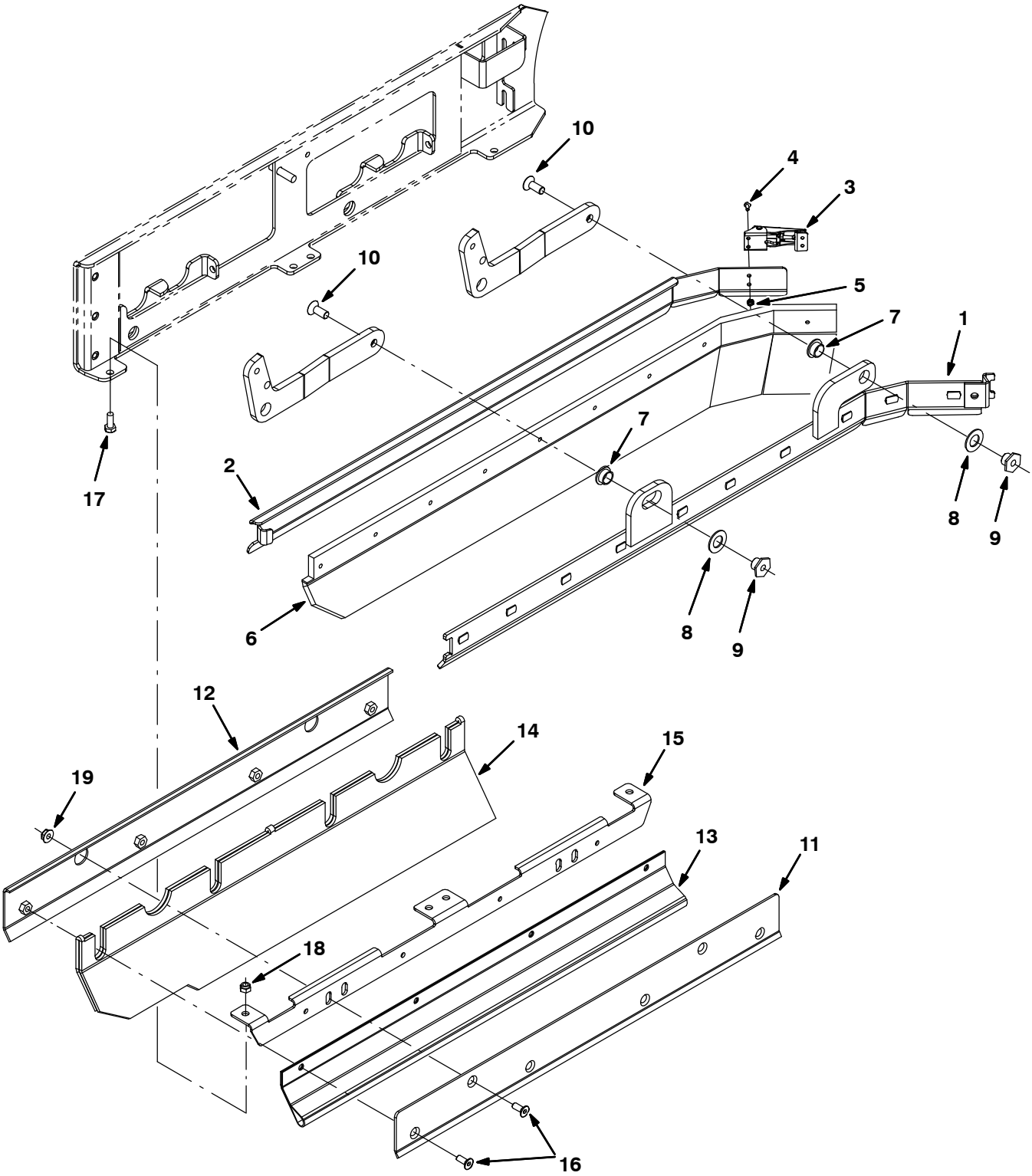

354442

Fig. 61 – Squeegee Group, Right Side

Ref.	Part No.	Serial Number	Description	Qty.
1	1029132	(000000–)	Frame Wldt, Sqge, Rh	1
2	1029128	(000000–)	Retainer, Sqge, Side, Rh	1
3	384418	(000000–)	Latch, Door [Southco 91–562–07]	1
4	49697	(000000–)	Screw, Pan, M4 X 0.7 X 10, Ss	2
5	33932	(000000–)	Nut, Hex, Lock, M4 X 0.7, Nl, Ss	2
6	1031011	(000000–)	Blade, Sqge, .38 3.55w 038.3l, Linatex	1
6	1031823	(000000–)	Blade, Sqge, .38 3.55w 038.3l, Ure (Option)	1
7	25735	(000000–)	Bushing, Flng, 0.63b 0.75d 0.38l	2
8	64425	(000000–)	Washer, Thrust, 0.61b 1.25d .06, Fgl	2
9	1022846	(000000–)	Nut, T, M10 X 1.50 X 15.8od X 13.0l	2
10	09081	(000000–)	Screw, Flt, M10 X 1.5 X 25, 10.9	2
11	1024584	(000000–)	Bracket, Mtg, Skirt, Brush Door	1
12	1024651	(000000–)	Bracket, Mtg, Skirt, Door	1
13	1024586	(000000–)	Skirt, Neo, .06, 06.85w 27.95l, 08 Hole	1
14	1019295	(000000–)	Skirt, Neo, .18, 10.37w 27.95l, 12 H&S	1
15	1025151	(000000–)	Bracket, Mtg, Skirt, Door, Brush	1
16	222463	(000000–)	Screw, Flt, M8 X 1.25 X 20, Blk	6
17	393135	(000000–)	Screw, Btn, M8 X 1.25 X 20, Blk	4
18	08713	(000000–)	Nut, Hex, Lock, M8 X 1.25, Nl, Ss	4
19	07791	(000000–)	Nut, Hex, Flng, M8 X 1.25	2

Fig. 62 – Squeegee Lift Group, Right Side

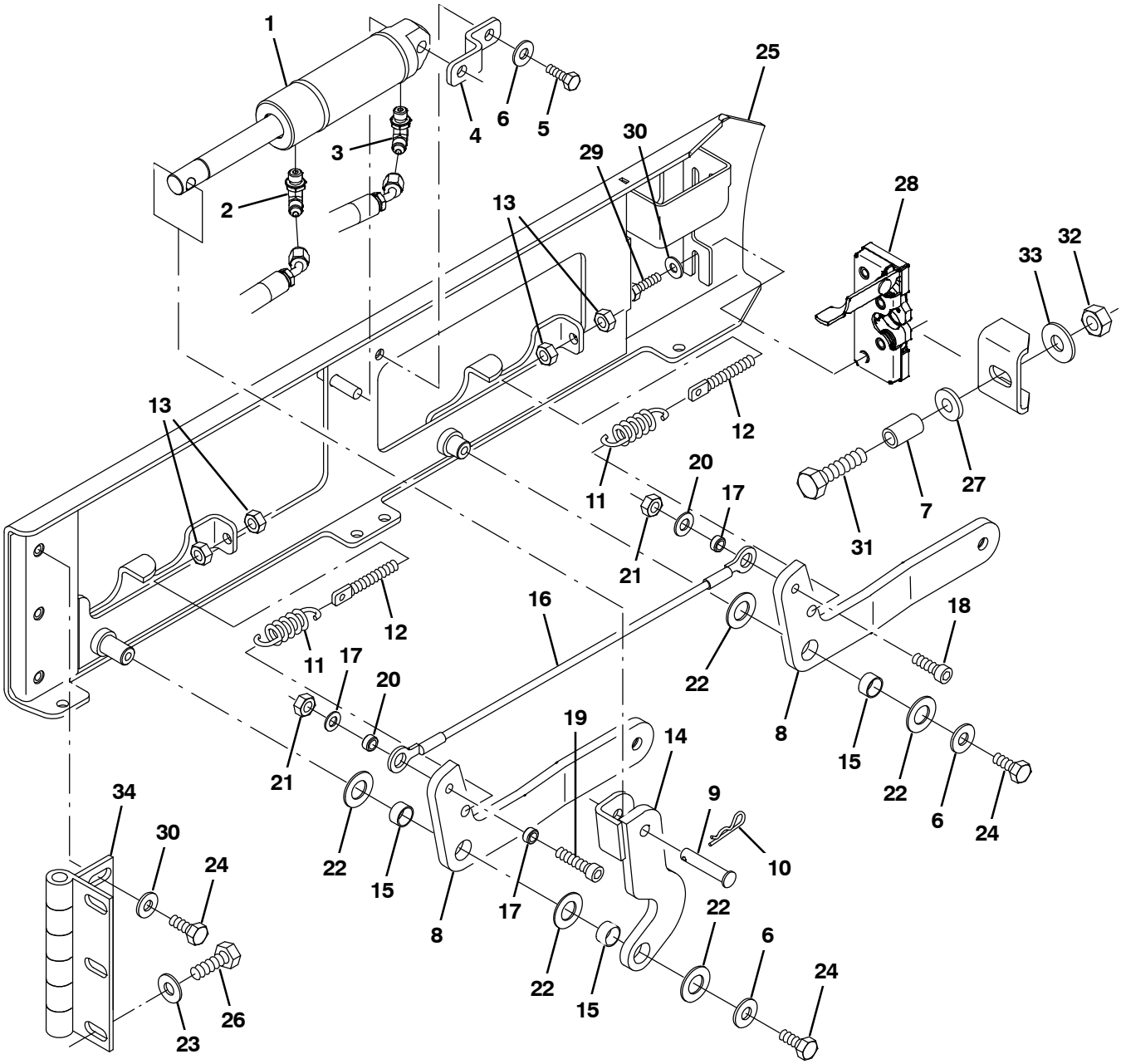

354443

Fig. 62 – Squeegee Lift Group, Right Side

Ref.	Part No.	Serial Number	Description	Qty.
1	1038137	(000000–)	Cylinder, Hyd, 1.5b 07.8l 02.80strk 2500	1
2	77097	(000000–)	Fitting, Hyd, E90, Jm04/Om04	1
3	1028635	(000000–)	Fitting, Hyd, Rst, Spcl	1
4	1022825	(000000–)	Bracket, Mtg, Cyl	1
5	08716	(000000–)	Screw, Hex, M6 X 1.00 X 20, Ss	1
6	01685	(000000–)	Washer, Flat, 0.31, Ss	3
7	1039348	(000000–)	Sleeve, 0.49b 0.68d 1.2l [304ss]	1
8	1020548	(000000–)	Arm, Sqge, Side, Rh	2
9	17461	(000000–)	Pin, Clevis, 0.37D X 1.75L	1
10	08182	(000000–)	Pin, Cotter, .125 X 1.00	1
11	87816	(000000–)	Spring, Extn, 0.75od X 0.09wir, 2.5l	2
12	386088	(000000–)	Bolt, Eye, M08 X 1.25 X 070mm, 05.50 Eye	2
13	07786	(000000–)	Nut, Hex, Std, M8 X 1.25, Ss	4
14	1023306	(000000–)	Arm Wldt, Sqge, Lift, Rh	1
15	71607	(000000–)	Bushing, Sleeve, 0.63b 0.72d 0.38l	3
16	81784	(000000–)	Cable, Glv .13d 015.8l .50eye /.50eye	1
17	360801	(000000–)	Sleeve, 0.31b 0.50d 0.3l, Ss	3
18	39308	(000000–)	Screw, Soc, M8 X 1.25 X 25, 12.9	1
19	41445	(000000–)	Screw, Soc, M8 X 1.25 X 35, 12.9	1
20	39349	(000000–)	Washer, Flat, 0.31 Sae	2
21	08709	(000000–)	Nut, Hex, Lock, M8 X 1.25, Nl	2
22	64425	(000000–)	Washer, Thrust, 0.61b 1.25d .06, Fgl	5
23	41187	(000000–)	Washer, Flat, Belleville, .38	3
24	09740	(000000–)	Screw, Hex, M8 X 1.25 X 20, Ss	5
25	1019031	(000000–)	Door Wldt, Brush, Rh	1
26	09028	(000000–)	Screw, Hex, M10 X 1.5 X 25, Ss	3
27	36328	(000000–)	Washer, Flat, Belleville, .50	1
28	59194	(000000–)	Latch, Hook	1
29	09007	(000000–)	Screw, Hex, M6 X 1.0 X 25, Ss	2
30	41185	(000000–)	Washer, Flat, Belleville, .25	5
31	379870	(000000–)	Screw, Hex, M12 X 1.75 X 55, Ss	1
32	07788	(000000–)	Nut, Hex, Std, M12 X 1.75, Ss	1
33	41619	(000000–)	Washer, Flat, 0.56b 1.38d .11, Ss	1
34	1024576	(000000–)	Hinge, .50pin .19 4.0w 06.0l 3/0.44sl	1

Fig. 63 – Squeegee Group, Left Side

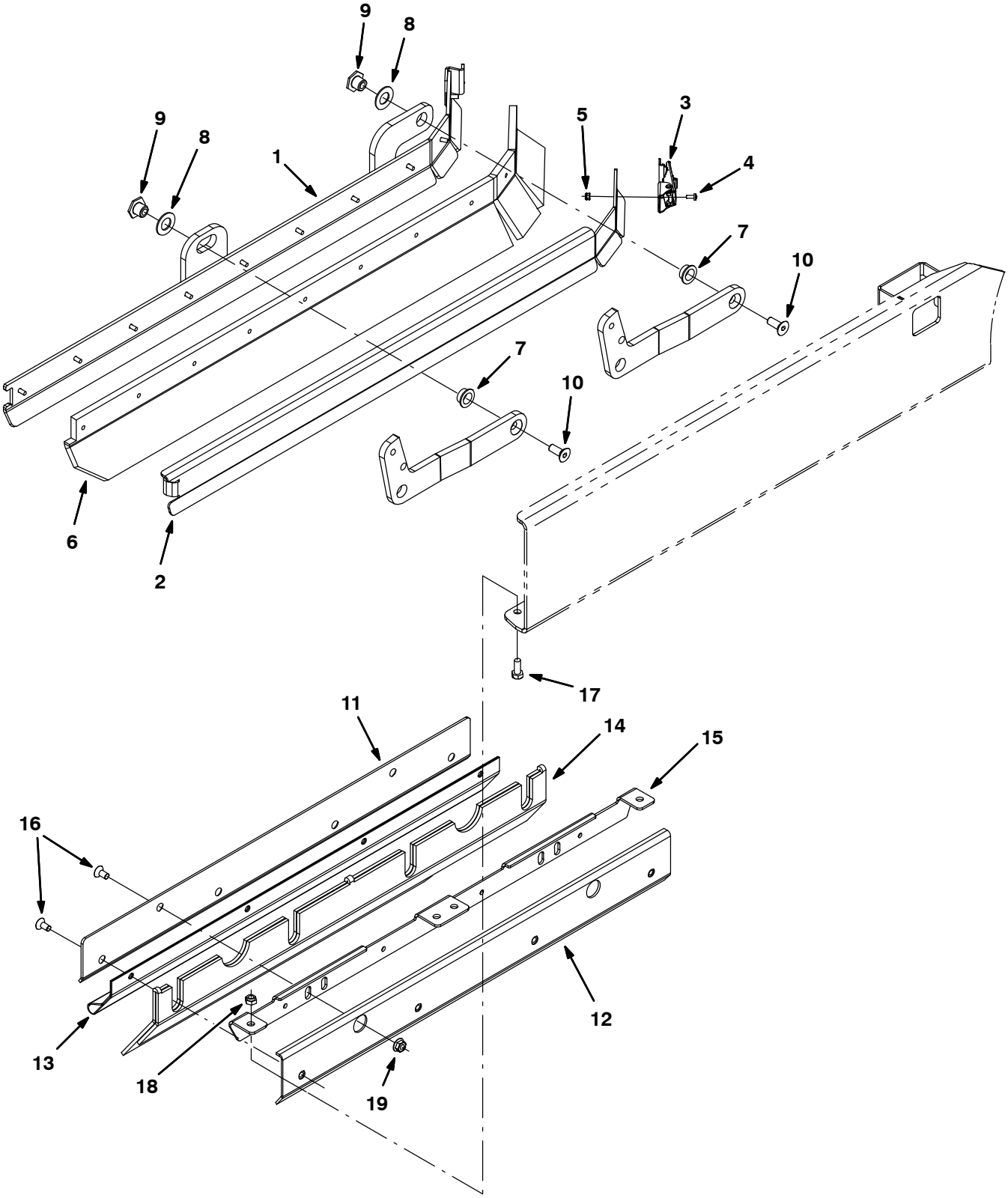

354444

Fig. 63 - Squeegee Group, Left Side

Ref.	Part No.	Serial Number	Description	Qty.
1	1028972	(000000-)	Frame Wldt, Sqge, Lh	1
2	1028979	(000000-)	Retainer, Sqge, Side, Lh	1
3	384418	(000000-)	Latch, Door [Southco 91- 562- 07]	1
4	49697	(000000-)	Screw, Pan, M4 X 0.7 X 10, Ss	2
5	33932	(000000-)	Nut, Hex, Lock, M4 X 0.7, Nl, Ss	2
6	1031011	(000000-)	Blade, Sqge, .38 3.55w 038.3l, Linatex	1
6	1031823	(000000-)	Blade, Sqge, .38 3.55w 038.3l, Ure (Option)	1
7	25735	(000000-)	Bushing, Flng, 0.63b 0.75d 0.38l	2
8	64425	(000000-)	Washer, Thrust, 0.61b 1.25d .06, Fgl	2
9	1022846	(000000-)	Nut, T, M10 X 1.50 X 15.8od X 13.0l	2
10	09081	(000000-)	Screw, Flt, M10 X 1.5 X 25, 10.9	2
11	1024584	(000000-)	Bracket, Mtg, Skirt, Brush Door	1
12	1024651	(000000-)	Bracket, Mtg, Skirt, Door	1
13	1024586	(000000-)	Skirt, Neo, .06, 06.85w 27.95l, 08 Hole	1
14	1019295	(000000-)	Skirt, Neo, .18, 10.37w 27.95l, 12 H&S	1
15	1025151	(000000-)	Bracket, Mtg, Skirt, Door, Brush	1
16	222463	(000000-)	Screw, Flt, M8 X 1.25 X 20, Blk	6
17	393135	(000000-)	Screw, Btn, M8 X 1.25 X 20, Blk	4
18	08713	(000000-)	Nut, Hex, Lock, M8 X 1.25, Nl, Ss	4
19	07791	(000000-)	Nut, Hex, Flng, M8 X 1.25	2

Fig. 64 – Squeegee Lift Group, Left Side

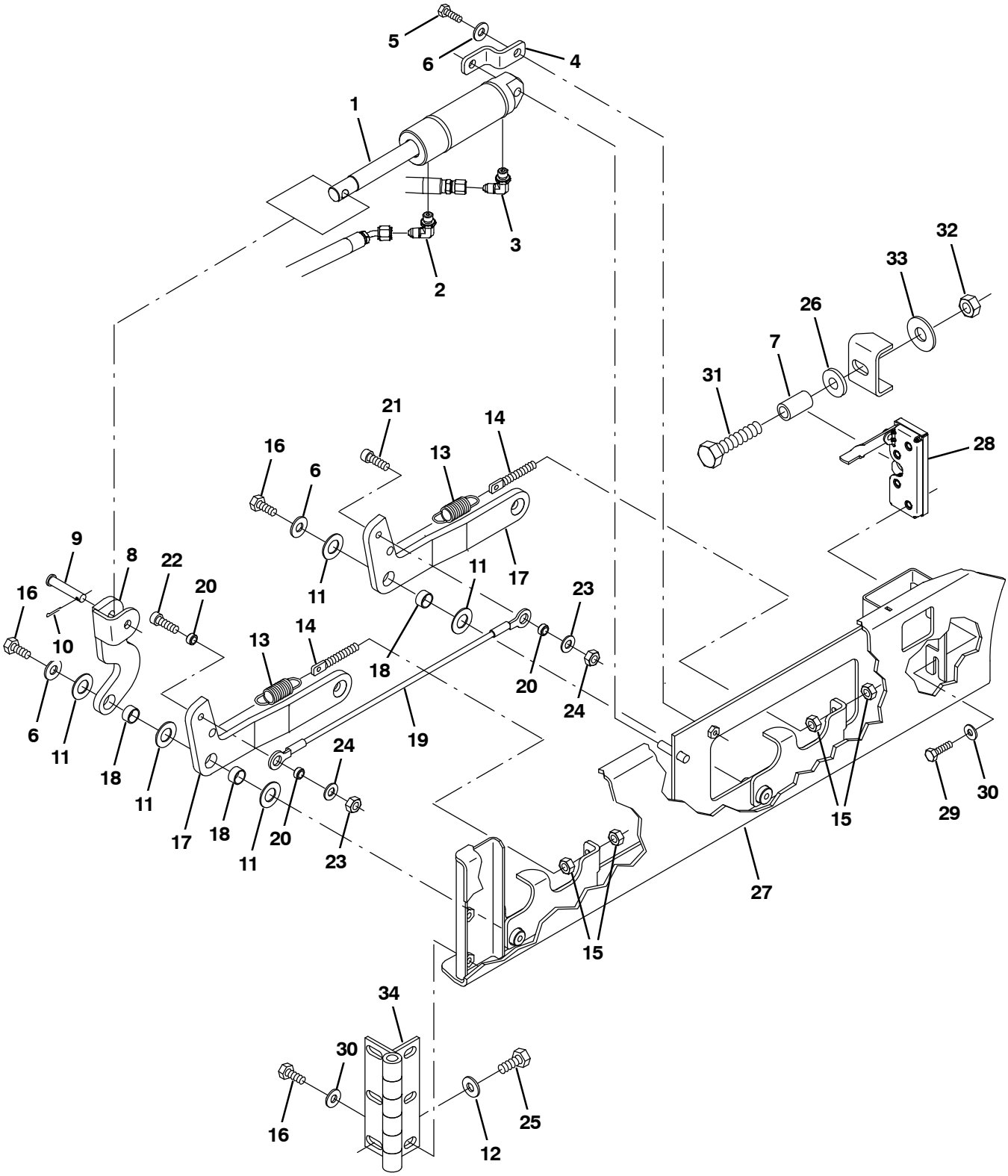

354445

Fig. 64 – Squeegee Lift Group, Left Side

Ref.	Part No.	Serial Number	Description	Qty.
1	1038137	(000000–)	Cylinder, Hyd, 1.5b 07.8l 02.80strk 2500	1
2	77097	(000000–)	Fitting, Hyd, E90, Jm04/Om04	1
3	1028635	(000000–)	Fitting, Hyd, Rst, Spcl	1
4	1022825	(000000–)	Bracket, Mtg, Cyl	1
5	08716	(000000–)	Screw, Hex, M6 X 1.00 X 20, Ss	1
6	01685	(000000–)	Washer, Flat, 0.31, Ss	3
7	1039348	(000000–)	Sleeve, 0.49b 0.68d 1.2l [304ss]	1
8	1022978	(000000–)	Arm Wldt, Lift, Sqge, Lh	1
9	17461	(000000–)	Pin, Clevis, 0.37D X 1.75L	1
10	08182	(000000–)	Pin, Cotter, .125 X 1.00	1
11	64425	(000000–)	Washer, Thrust, 0.61b 1.25d .06, Fgl	5
12	41187	(000000–)	Washer, Flat, Belleville, .38	3
13	87816	(000000–)	Spring, Extn, 0.75od X 0.09wir, 2.5l	2
14	386088	(000000–)	Bolt, Eye, M08 X 1.25 X 070mm, 05.50 Eye	2
15	07786	(000000–)	Nut, Hex, Std, M8 X 1.25, Ss	4
16	09740	(000000–)	Screw, Hex, M8 X 1.25 X 20, Ss	5
17	1023307	(000000–)	Arm, Sqge, Side, Lh	2
18	71607	(000000–)	Bushing, Sleeve, 0.63b 0.72d 0.38l	3
19	81784	(000000–)	Cable, Glv .13d 015.8l .50eye /.50eye	1
20	360801	(000000–)	Sleeve, 0.31b 0.50d 0.3l, Ss	3
21	39308	(000000–)	Screw, Soc, M8 X 1.25 X 25, 12.9	1
22	41445	(000000–)	Screw, Soc, M8 X 1.25 X 35, 12.9	1
23	39349	(000000–)	Washer, Flat, 0.31 Sae	2
24	08709	(000000–)	Nut, Hex, Lock, M8 X 1.25, Nl	2
25	09028	(000000–)	Screw, Hex, M10 X 1.5 X 25, Ss	3
26	36328	(000000–)	Washer, Flat, Belleville, .50	1
27	1023314	(000000–)	Door Wldt, Brush, Lh	1
28	59195	(000000–)	Latch, Hook	1
29	09007	(000000–)	Screw, Hex, M6 X 1.0 X 25, Ss	2
30	41185	(000000–)	Washer, Flat, Belleville, .25	5
31	379870	(000000–)	Screw, Hex, M12 X 1.75 X 55, Ss	1
32	07788	(000000–)	Nut, Hex, Std, M12 X 1.75, Ss	1
33	41619	(000000–)	Washer, Flat, 0.56b 1.38d .11, Ss	1
34	1024576	(000000–)	Hinge, .50pin .19 4.0w 06.0l 3/0.44sl	1

Fig. 65 – Solution Tank Group

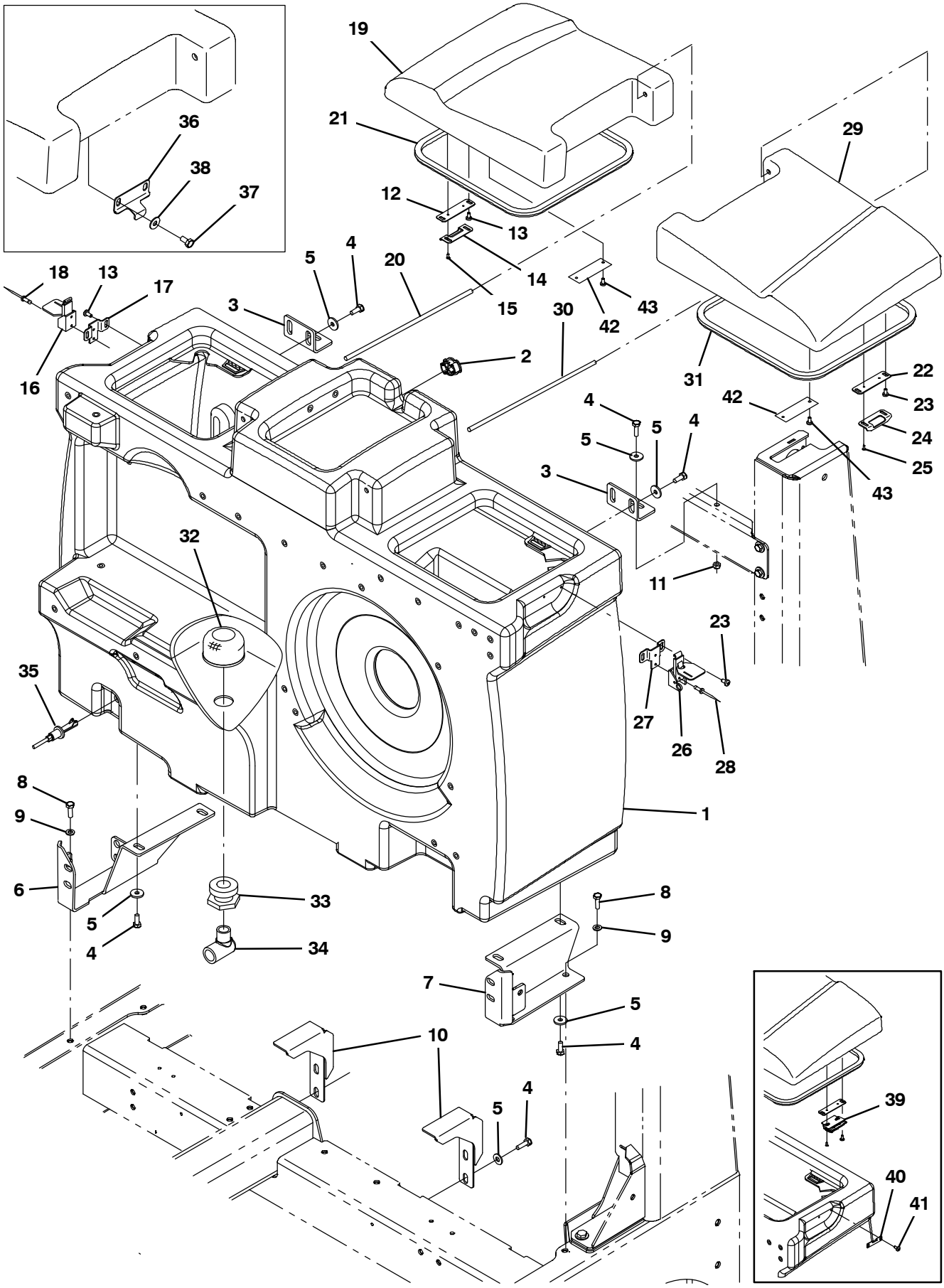

354446 – M20

Fig. 65 – Solution Tank Group

	Ref.	Part No.	Serial Number	Description	Qty.
	1	1027381	(002413–)	Tank, Soltn, W/ Label [M20]	1
	1	9004117	(000000–002412)	Tank Kit, Soltn, W/ Bracket, Replmt	1
	2	390994	(000000–)	Plug, Hole, Soltn Tank, Blk Pyu	1
	3	1020209	(000000–)	Angle, Sppt, Tank, Rear	2
	4	09740	(000000–)	Screw, Hex, M8 X 1.25 X 20, Ss	12
	5	1017218	(000000–)	Washer, Flat, 0.32b 1.00d .12, Ss	12
	6	1040306	(000000–)	Bracket Wldt, Tank, Soltn, Rh	1
	7	1024591	(000000–)	Bracket, Tank, Soltn, Lh	1
	8	09010	(000000–)	Screw, Hex, M8 X 1.25 X 25, Ss	4
	9	39349	(000000–)	Washer, Flat, 0.31 Sae	4
	10	1024389	(000000–)	Bracket, Soltn, Tank, Cntr	2
	11	08713	(000000–)	Nut, Hex, Lock, M8 X 1.25, Nl, Ss	2
▽		9003069	(000000–)	Cover Kit, Soltn Tank, Rh [M20 & T20]	1
▲▽		9005165	(000000–)	Latch Kit, Cover, Soltn, Replmt[M20/T20]	1
▲▲	12	1039757	(002426–)	Plate, Mtg, Latch	1
▲▲	13	382320	(000000–)	Screw, Pan, Phl, 12–16 X 0.50, F/ Plstc	4
▲▲	14	1048474	(002798–)	Catch, Latch, Tank Cover	1
▲▲	15	222267	(002798–)	Screw, Pan, Phl, 06–20 X 0.50, Fmg/Ab	2
▲▲	16	367949	(002798–)	Latch	1
▲▲	17	1048512	(002798–)	Bracket, Mtg, Latch, Tank Cover	1
▲▲	18	08875	(002798–)	Rivet, Blind, .125d X 0.54 X .25d, Alm	2
▲	19	1022176	(000000–)	Cover, Tank, Soltn, Rh, Trimmed	1
▲	20	1047098	(000000–)	Bar, Rnd, Plstc, 0.31d 12.5l	1
▲	21	1038805	(000000–)	Seal, Bulb, Str, .50Hi .50W 047.2L, Adh	1
▽		9003071	(000000–)	Cover Kit, Tank, Soltn, Rh, Replmt, Ce (Japan and CE Only)	1
▲▽		9005165	(000000–)	Latch Kit, Cover, Soltn, Replmt[M20/T20]	1
▲▲	12	1039757	(002426–)	Plate, Mtg, Latch	1
▲▲	13	382320	(000000–)	Screw, Pan, Phl, 12–16 X 0.50, F/ Plstc	4
▲▲	14	1048474	(002798–)	Catch, Latch, Tank Cover	1
▲▲	15	222267	(002798–)	Screw, Pan, Phl, 06–20 X 0.50, Fmg/Ab	2
▲▲	16	367949	(002798–)	Latch	1
▲▲	17	1048512	(002798–)	Bracket, Mtg, Latch, Tank Cover	1
▲▲	18	08875	(002798–)	Rivet, Blind, .125d X 0.54 X .25d, Alm	2
▲	19	1031233	(000000–)	Cover, Tank, Soltn, Rh, Trimmed, Ce (Japan and CE Only)	1
▲	20	1047098	(000000–)	Bar, Rnd, Plstc, 0.31d 12.5l	1
▲	21	1038805	(000000–)	Seal, Bulb, Str, .50Hi .50W 047.2L, Adh	1

(CONTINUED)

Fig. 65 – Solution Tank Group

	Ref.	Part No.	Serial Number	Description	Qty.
▽		9003068	(000000–)	Cover Kit, Tank, Soltn, Lh, Replmt	1
▲▽		9005165	(000000–)	Latch Kit, Cover, Soltn, Replmt[M20/T20]	1
▲▲	22	1039757	(002426–)	Plate, Mtg, Latch	1
▲▲	23	382320	(000000–)	Screw, Pan, Phl, 12–16 X 0.50, F/ Plstc	4
▲▲	24	1048474	(002798–)	Catch, Latch, Tank Cover	1
▲▲	25	222267	(002798–)	Screw, Pan, Phl, 06–20 X 0.50, Fmg/Ab	2
▲▲	26	367949	(002798–)	Latch	1
▲▲	27	1048512	(002798–)	Bracket, Mtg, Latch, Tank Cover	1
▲▲	28	08875	(002798–)	Rivet, Blind, .125d X 0.54 X .25d, Alm	2
▲	29	1022182	(000000–)	Cover, Tank, Soltn, Lh, Trimmed	1
▲	30	1047098	(000000–)	Bar, Rnd, Plstc, 0.31d 12.5l	1
▲	31	1038805	(000000–)	Seal, Bulb, Str, .50Hi .50W 047.2L, Adh	1
▽		9003070	(000000–)	Cover Kit, Tank, Soltn, Lh, Replmt, Ce (Japan and CE Only)	1
▲▽		9005165	(000000–)	Latch Kit, Cover, Soltn, Replmt[M20/T20]	1
▲▲	22	1039757	(002426–)	Plate, Mtg, Latch	1
▲▲	23	382320	(000000–)	Screw, Pan, Phl, 12–16 X 0.50, F/ Plstc	4
▲▲	24	1048474	(002798–)	Catch, Latch, Tank Cover	1
▲▲	25	222267	(002798–)	Screw, Pan, Phl, 06–20 X 0.50, Fmg/Ab	2
▲▲	26	367949	(002798–)	Latch	1
▲▲	27	1048512	(002798–)	Bracket, Mtg, Latch, Tank Cover	1
▲▲	28	08875	(002798–)	Rivet, Blind, .125d X 0.54 X .25d, Alm	2
▲	29	1031235	(000000–)	Cover, Tank, Soltn, Lh, Trimmed, Ce (Japan and CE Only)	1
▲	30	1047098	(000000–)	Bar, Rnd, Plstc, 0.31d 12.5l	1
▲	31	1038805	(000000–)	Seal, Bulb, Str, .50Hi .50W 047.2L, Adh	1
	32	1027290	(000000–)	Filter, Soltn, 20mesh, Pm12 3.1d 02.6l	1
	33	377349	(000000–)	Fitting, Plstc, Pf12/Pf12, Bh	1
	34	69785	(000000–)	Fitting, Plstc, E90, Pf12/Pm12	1
	35	385685	(000000–)	Sensor, Level, Liq, 14vdc 01a .62–11	1
	36	1020428	(000000–002425)	Bracket, Latch, Cover	2
	37	09744	(000000–002425)	Screw, Hex, M6 X 1.00 X 12, Ss	4
	38	01684	(000000–002425)	Washer, Flat, 0.27b 0.69d .05, Ss	4
	39	1030617	(002426–002797)	Latch, Cover	2
	40	1029748	(002426–002797)	Bracket, Keeper, Latch	2
	41	382320	(002426–002797)	Screw, Pan, Phl, 12–16 X 0.50, F/ Plstc	4
	42	1017101	(000000–)	Plate, Label, Soltn Tank (ec–H20 only)	2
	43	360973	(000000–)	Screw, Pan, 12–16 X 0.50, F/ Plstc (ec–H20 only)	4

Fig. 66 – Solution Tank Drain Group

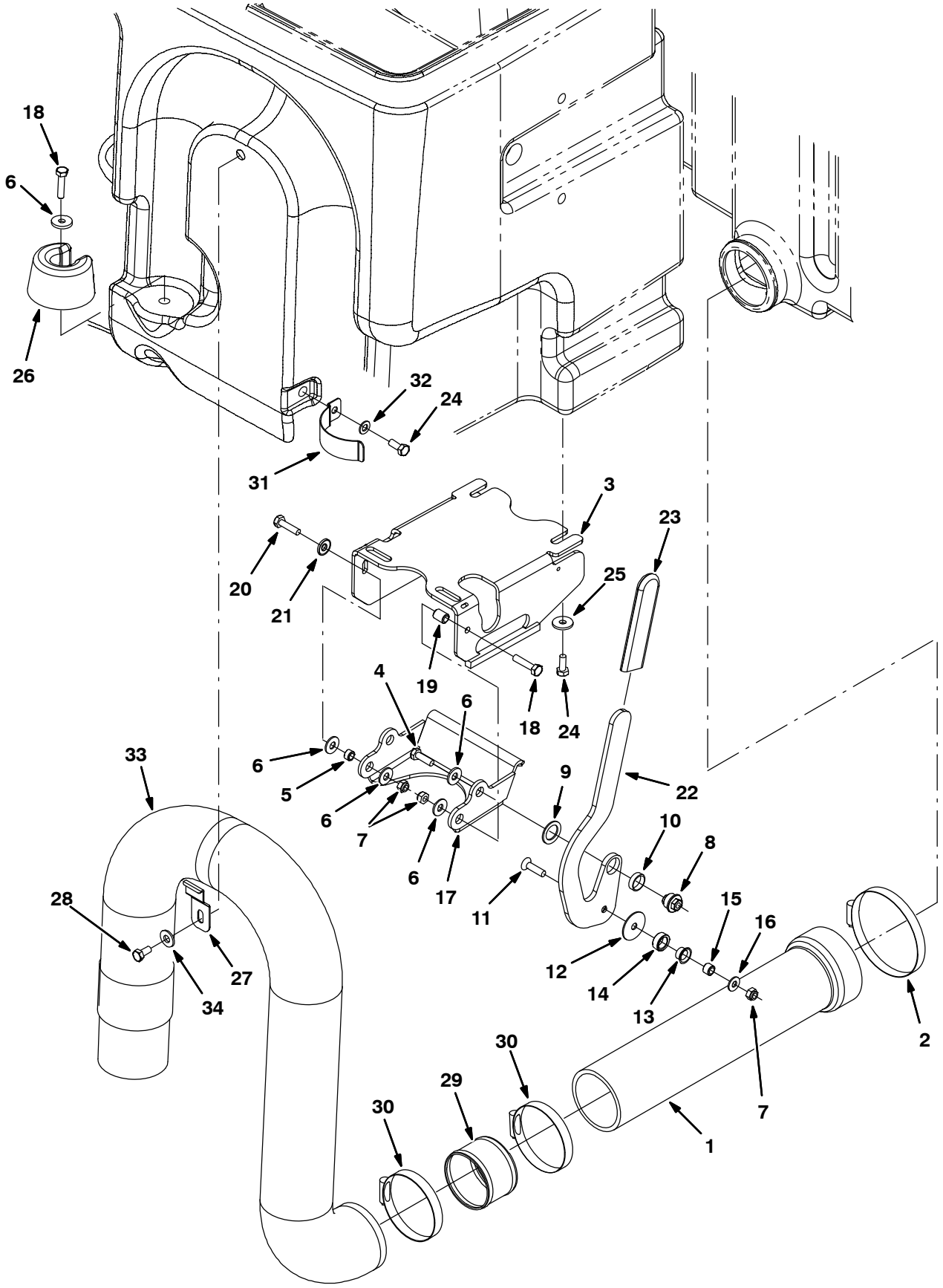

354447

Fig. 66 – Solution Tank Drain Group

Ref.	Part No.	Serial Number	Description	Qty.
1	9003793	(000000–)	Tube Kit, Tank, Soltn, Replmt	1
2	23498	(000000–)	Clamp, Hose, Wormdrive, 3.56–4.50d, .50w	1
3	1042003	(000000–)	Mount Wldt, Valve, Pinch, Rh	1
4	39277	(000000–)	Screw, Hex, M8 X 1.25 X 25, 8.8	1
5	222516	(000000–)	Sleeve, P/M, 0.31b 0.50d 0.3l [430ss]	1
6	32491	(000000–)	Washer, Flat, 0.31, Std	5
7	08713	(000000–)	Nut, Hex, Lock, M8 X 1.25, Nl, Ss	3
8	1024599	(000000–)	Bushing, Eccentric, Adj	1
9	1026051	(000000–)	Washer, Flat, 0.79b 1.18d .06, Nyl	1
10	74090	(000000–)	Bushing, Sleeve, 0.75b 0.88d 0.25l	1
11	79506	(000000–)	Screw, Flt, M8 X 1.25 X 30, Ss	1
12	1028701	(000000–)	Washer, Thrust, 0.34b 1.50d .06	1
13	15648	(000000–)	Bushing, Flng, 0.50b 0.59d 0.38l	1
14	1028691	(000000–)	Roller, Brg	1
15	1028690	(000000–)	Tube, 0.50d 0.32b 00.4l, Ss	1
16	1017218	(000000–)	Washer, Flat, 0.32b 1.00d .12, Ss	1
17	1024535	(000000–)	Arm, Pinch	1
18	06955	(000000–)	Screw, Hex, M8 X 1.25 X 35, 8.8	2
19	80395	(000000–)	Sleeve, P/M, 0.31b 0.50d 0.7l [430ss]	1
20	76570	(000000–)	Screw, Hex, M8 X 1.25 X 30, 8.8	1
21	41186	(000000–)	Washer, Flat, Belleville, .31	1
22	1026727	(000000–)	Handle, Valve, Pinch, Rh	1
23	1023502	(000000–)	Grip, Handle	1
24	09740	(000000–)	Screw, Hex, M8 X 1.25 X 20, Ss	5
25	1017218	(000000–)	Washer, Flat, 0.32b 1.00d .12, Ss	4
26	1022137	(000000–)	Plug, Hose, Pyu	1
27	1025480	(000000–)	Bracket, Retaining, Hose	1
28	15675	(000000–)	Screw, Hex, M8 X 1.25 X 16, Ss	1
29	1041953	(000000–)	Tube, 2.90id 3.00od 02.4l, Ss	2
30	43555	(000000–)	Clamp, Hose, Wormdrive, 2.50–3.50d, .50w	2
31	1024558	(000000–)	Strap, Retaining, Hose	1
32	39349	(000000–)	Washer, Flat, 0.31 Sae	1
33	1019424	(000000–)	Hose, Drain, 3.00id X 48.0l	1
34	01685	(000000–)	Washer, Flat, 0.31, Ss	2

Fig. 67 – Solution Control Group

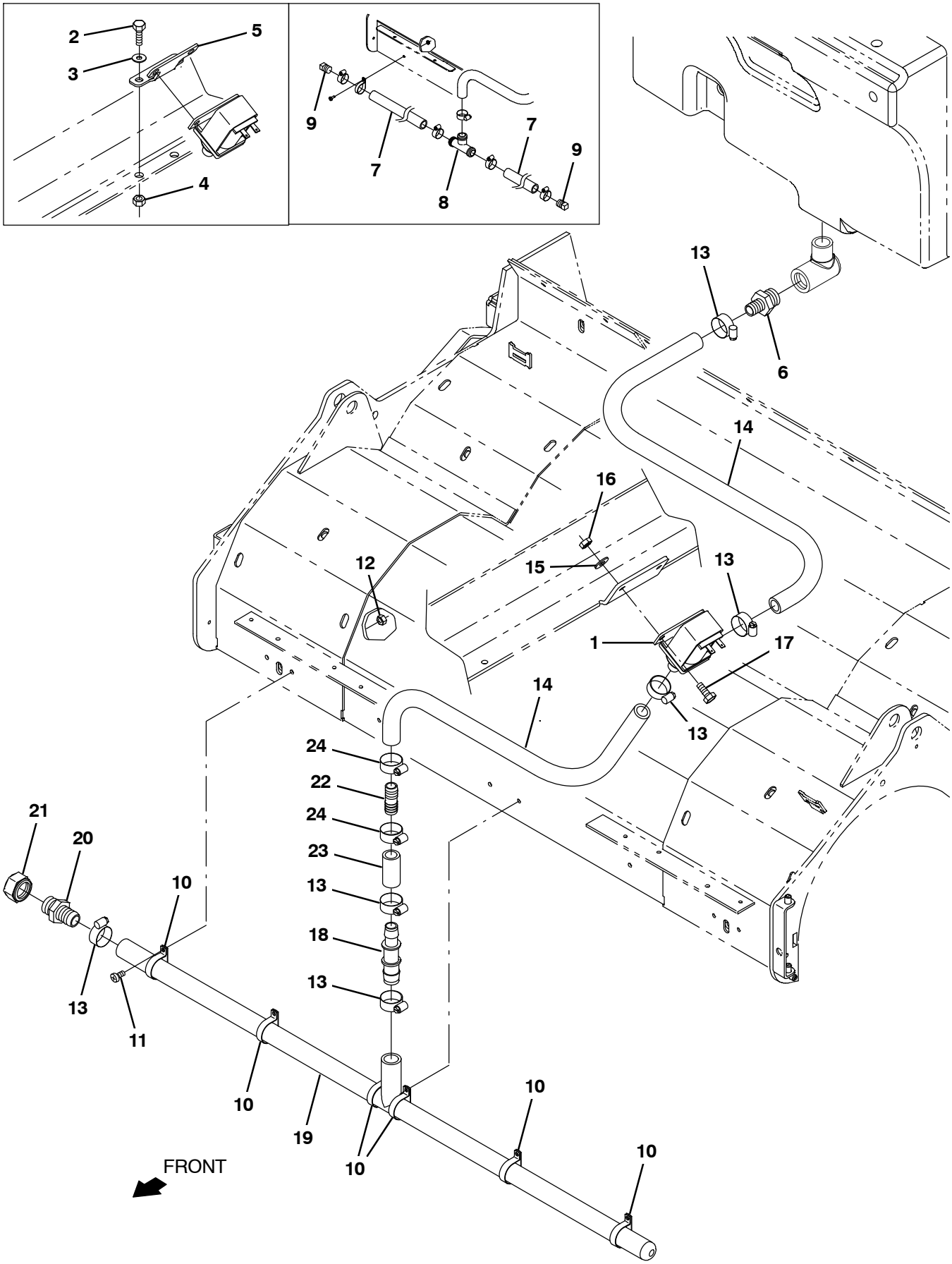

354448

Fig. 67 – Solution Control Group

Ref.	Part No.	Serial Number	Description	Qty.
1	1067700	(000000–)	Valve Assy, Water, Solenoid , 12vdc	1
2	08716	(000000–002241)	Screw, Hex, M6 X 1.0 X 20, Ss	2
3	01684	(000000–002241)	Washer, Flat, 0.25, Ss	2
4	08712	(000000–002241)	Nut, Hex, Lock, M6 X 1.0, Ss, Nl	2
5	1028074	(000000–002241)	Bracket, Mtg, Valve	1
6	79273–2	(000000–007259)	Fitting, Plstc, Str, Bm12/Pm12	1
6	365095	(007260–)	Fitting, Plstc, Str, Bm10/Pm12	1
7	1029185	(000000–002143)	Tube, Distribution, Water	2
8	41315	(000000–002143)	Fitting, Plstc, Tee, Bm12/Bm12/Bm12	1
9	17521	(000000–002143)	Fitting, Pipe, Plug, Pm08, Sq Head	2
10	50544	(000000–)	Clamp, Cable, Ss, 1.12d X 0.38w, 1h	6
11	09200	(000000–)	Screw, Pan, M5 X 0.8 X 12, Ss	6
12	09739	(000000–)	Nut, Hex, Lock, M5 X 0.8, Nl, Ss	6
13	63810	(000000–)	Clamp, Hose, Wormdrive, 0.56–1.06d, .56w	8
14	1015045	(000000–007259)	Hose, Afmkt, Pvc, Brd 0.75id 08ft	1
14	1015032	(007260–)	Hose, Afmkt, Pvc, Brd, 0.62id, 08ft, Clr	1
15	01684	(000000–)	Washer, Flat, 0.25, Ss	2
16	08712	(000000–)	Nut, Hex, Lock, M6 X 1.0, Ss, Nl	2
17	08716	(000000–)	Screw, Hex, M6 X 1.0 X 20, Ss	2
18	1038074	(002144–007259)	Fitting, Plstc, Str, Bm12/Bm12	1
18	363543	(007260–)	Fitting, Plstc, Str, Bm10/Bm12	1
19	1036997	(002144–)	Manifold, Bar, Spray, 37.5inch	1
20	79273–2	(002144–)	Fitting, Plstc, Str, Bm12/Pm12	1
21	1039064	(002144–)	Fitting, Plstc, Cap, Pf12 Hex	1
22	365164	(007260–)	Fitting, Plstc, Str, Bm10/Bm10	1
23	1015033	(007260–)	Hose, Afmkt, Pvc, Brd, 0.62id, 01ft, Clr	1
24	63810	(007260–)	Clamp, Hose, Wormdrive, 0.56–1.06d, .56w	2

Fig. 68 – Recovery Tank Group

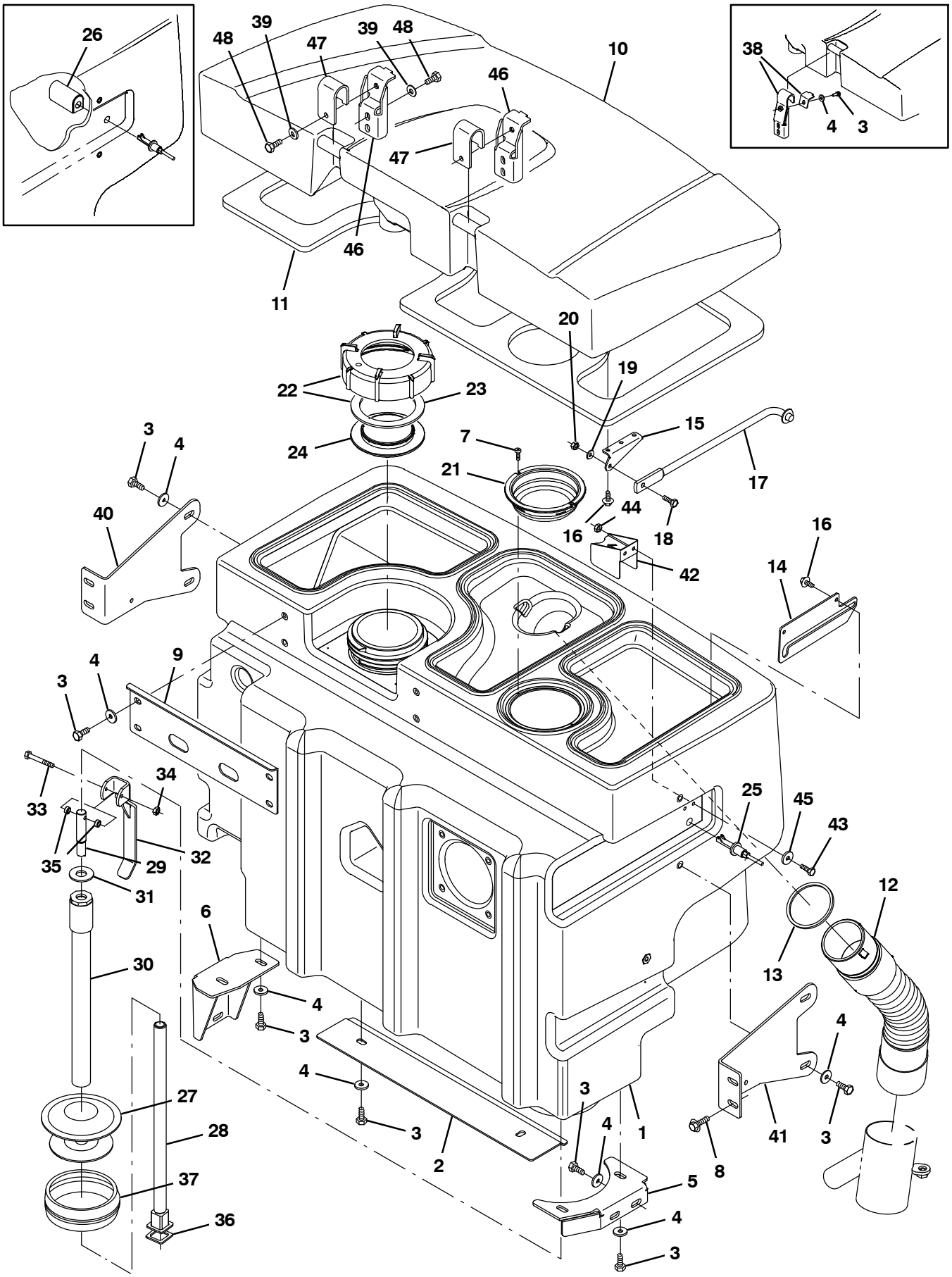

354449

Fig. 68 – Recovery Tank Group

	Ref.	Part No.	Serial Number	Description	Qty.
	1	1021419	(000000–)	Tank, Recvy, Trimmed	1
	2	1024403	(000000–)	Plate, Tank, Bottom	1
	3	09740	(000000–)	Screw, Hex, M8 X 1.25 X 20, Ss	17
	4	1017218	(000000–)	Washer, Flat, 0.32b 1.00d .12, Ss	15
	5	1020335	(000000–)	Bracket, Sppt, Tank, Lh	1
	6	1020331	(000000–)	Bracket, Sppt, Tank, Rh	1
	7	382320	(000000–)	Screw, Pan, #12–16 X 0.50, F/ Plstc	2
	8	1037346	(000000–)	Screw, Hex, M8 X 1.25 X 25, 9.8, Sems	4
	9	1021090	(000000–)	Plate, Sppt, Tank	1
	10	1022167	(000000–)	Cover, Tank, Recvy, Trimmed	1
	11	1021879	(000000–)	Gasket, Cover, Recvy Tank	1
	12	1031610	(000000–)	Hose Assy, Sqge	1
	13	1021920	(000000–)	Gasket, 3.23id 3.63od .16th, Ure	1
	14	1025620	(000000–)	Plate, Mtg, Prop Rod	1
	15	1025619	(000000–)	Bracket, Mtg, Prop Rod	1
	16	1046798	(000000–)	Screw, Hex, .25–14 X 0.75, Fmg/Ab, Ss	4
	17	54615	(000000–)	Arm Wldt, Safety, Sppt, Seat, .38d 10.1l	1
	18	08716	(000000–)	Screw, Hex, M6 X 1.0 X 20, Ss	1
	19	01684	(000000–)	Washer, Flat, 0.25, Ss	1
	20	08712	(000000–)	Nut, Hex, Lock, M6 X 1.0, Ss, Nl	1
	21	1026014	(000000–)	Screen, Vacuum	1
▽	22	24358	(000000–)	Cap Assy, Tank, Drain	1
▲	23	1031699	(000000–)	Gasket, 4.05id 5.29od .19 [Buna]	1
	24	86636	(000000–)	Cover, Tank	1
	25	385685	(000000–)	Sensor, Level, Liq, 14vdc 01a .62–11	1
	26	9003449	(000000–002024)	Cover Kit, Switch, Float, Repair	1
▽		9003313	(000000–)	Plug Kit, Drain, Recvy, Ci [M20 & T20]	1
▲	27	1022370	(000000–)	Plug, Drain, Expandable, 4.75–6.00	1
▲	28	1028328	(000000–)	Tube Wldt, Plug, Drain	1
▲	29	1028173	(000000–)	Pin, Lift, Drain	1
▲	30	1072885	(000000–)	Tube Assy, Plug, Drain	1
▲	31	1028522	(000000–)	Washer, Flat, .78b 1.75d .18, Ss	1
▲	32	1028211	(000000–)	Handle Wldt, Drain	1
▲	33	58979	(000000–)	Screw, Hex, M6 X 1.0 X 55, Ss	1
▲	34	08712	(000000–)	Nut, Hex, Lock, M6 X 1.0, Ss, Nl	1
▲	35	360801	(000000–)	Sleeve, 0.31b 0.50d 0.3l, Ss	2
▲	36	1035044	(000000–)	Seal, Shaft, Drain Plug	1
▲	37	1039652	(000000–)	Seal, Plug, Drain, Nitrile	1
	38	9003893	(000000–002418)	Hinge Kit, Cover, Tank, Recvy, Replmt	2
	39	32491	(002419–)	Washer, Flat, 0.31, Std	6
	40	1038941	(000000–)	Bracket, Sppt, Tank, Rh	1
	41	1038927	(000000–)	Bracket, Sppt, Tank, Lh	1
	42	1037816	(002025–)	Bracket, Protector, Float Switch	1
	43	09007	(002025–)	Screw, Hex, M6 X 1.00 X 25, Ss	2
	44	08712	(002025–)	Nut, Hex, Lock, M6 X 1.00, Ss, Nl	2
	45	76426	(002025–)	Washer, Sealing, 0.28b 0.75d Ss, Neo	2
	46	1039072	(002419–)	Bracket, Sppt, Cover, Tank, Recvy	2
	47	1039049	(002419–)	Bracket, Mtg, Cover, Recvy Tank	2
	48	16735	(002419–)	Screw, Hex, M8 X 1.25 X 16, 8.8	6

Fig. 69 – Recovery Tank Drain Group

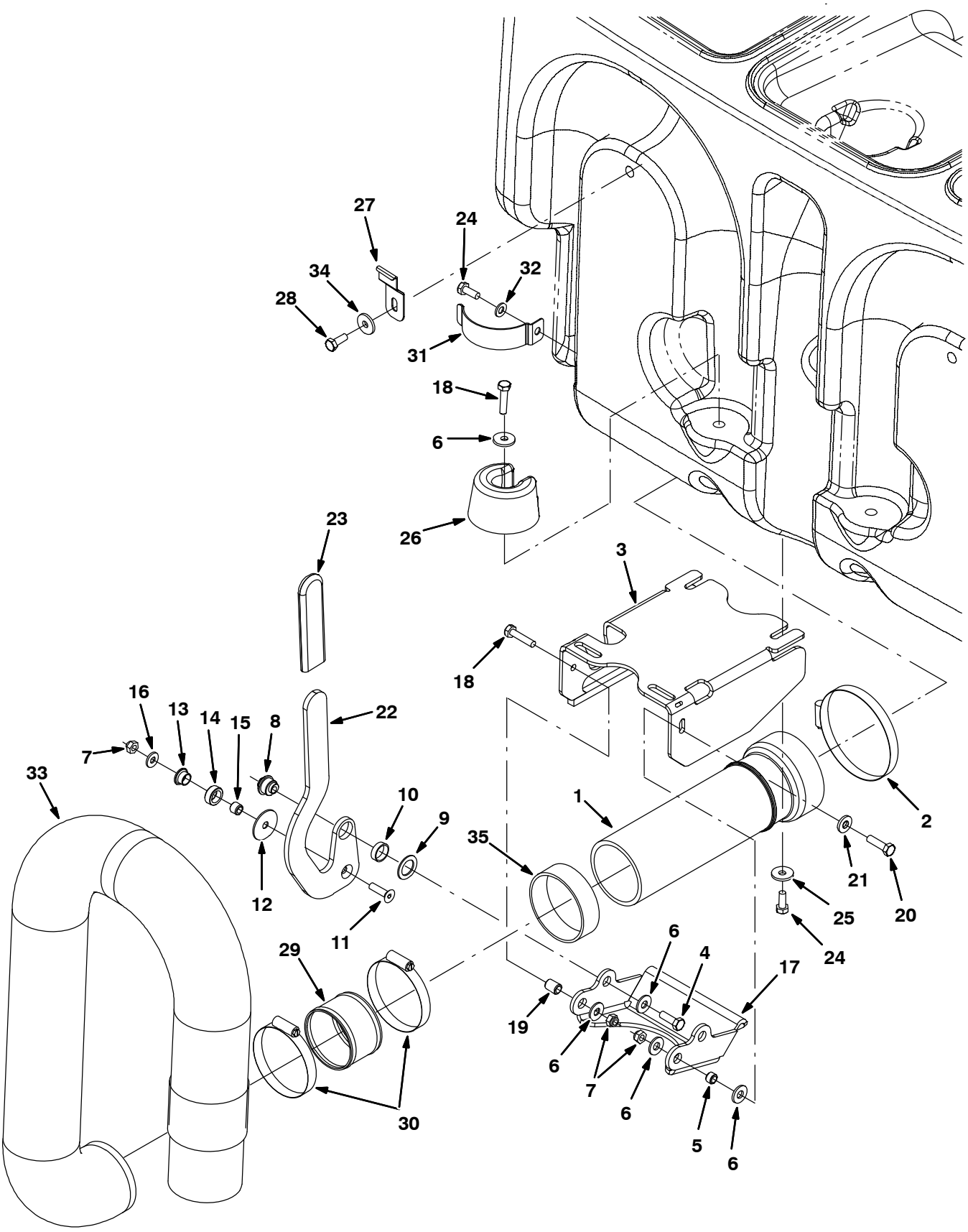

354450

Fig. 69 – Recovery Tank Drain Group

Ref.	Part No.	Serial Number	Description	Qty.
1	9003794	(000000–)	Tube Kit, Tank, Recvy, Replmt	1
2	23498	(000000–)	Clamp, Hose, Wormdrive, 3.56–4.50d, .50w	1
3	1042010	(000000–)	Mount Wldt, Valve, Pinch, Lh	1
4	39277	(000000–)	Screw, Hex, M8 X 1.25 X 25, 8.8	1
5	222516	(000000–)	Sleeve, P/M, 0.31b 0.50d 0.3l [430ss]	1
6	32491	(000000–)	Washer, Flat, 0.31, Std	5
7	08713	(000000–)	Nut, Hex, Lock, M8 X 1.25, Nl, Ss	3
8	1024599	(000000–)	Bushing, Eccentric, Adj	1
9	1026051	(000000–)	Washer, Flat, 0.79b 1.18d .06, Nyl	1
10	74090	(000000–)	Bushing, Sleeve, 0.75b 0.88d 0.25l	1
11	79506	(000000–)	Screw, Flt, M8 X 1.25 X 30, Ss	1
12	1028701	(000000–)	Washer, Thrust, 0.34b 1.50d .06	1
13	15648	(000000–)	Bushing, Flng, 0.50b 0.59d 0.38l	1
14	1028691	(000000–)	Roller, Brg	1
15	1028690	(000000–)	Tube, 0.50d 0.32b 00.4l, Ss	1
16	1017218	(000000–)	Washer, Flat, 0.32b 1.00d .12, Ss	1
17	1024535	(000000–)	Arm, Pinch	1
18	06955	(000000–)	Screw, Hex, M8 X 1.25 X 35, 8.8	2
19	80395	(000000–)	Sleeve, P/M, 0.31b 0.50d 0.7l [430ss]	1
20	76570	(000000–)	Screw, Hex, M8 X 1.25 X 30, 8.8	1
21	41186	(000000–)	Washer, Flat, Belleville, .31	1
22	1027039	(000000–)	Handle, Valve, Pinch, Lh	1
23	1023502	(000000–)	Grip, Handle	1
24	09740	(000000–)	Screw, Hex, M8 X 1.25 X 20, Ss	5
25	1017218	(000000–)	Washer, Flat, 0.32b 1.00d .12, Ss	2
26	1022137	(000000–)	Plug, Hose, Pyu	2
27	1025480	(000000–)	Bracket, Retaining, Hose	1
28	15675	(000000–)	Screw, Hex, M8 X 1.25 X 16, Ss	1
29	1041953	(000000–)	Tube, 2.90id 3.00od 02.4l, Ss	1
30	43555	(000000–)	Clamp, Hose, Wormdrive, 2.50–3.50d, .50w	2
31	1024558	(000000–)	Strap, Retaining, Hose	1
32	39349	(000000–)	Washer, Flat, 0.31 Sae	1
33	1019424	(000000–)	Hose, Drain, 3.00id X 48.0l	1
34	01685	(000000–)	Washer, Flat, 0.31, Ss	2
35	1031309	(000000–)	Tube, Acrylic, Hose, Pinch	1

Fig. 70 – Vacuum Fan Group, Scrubbing (000000–006877)

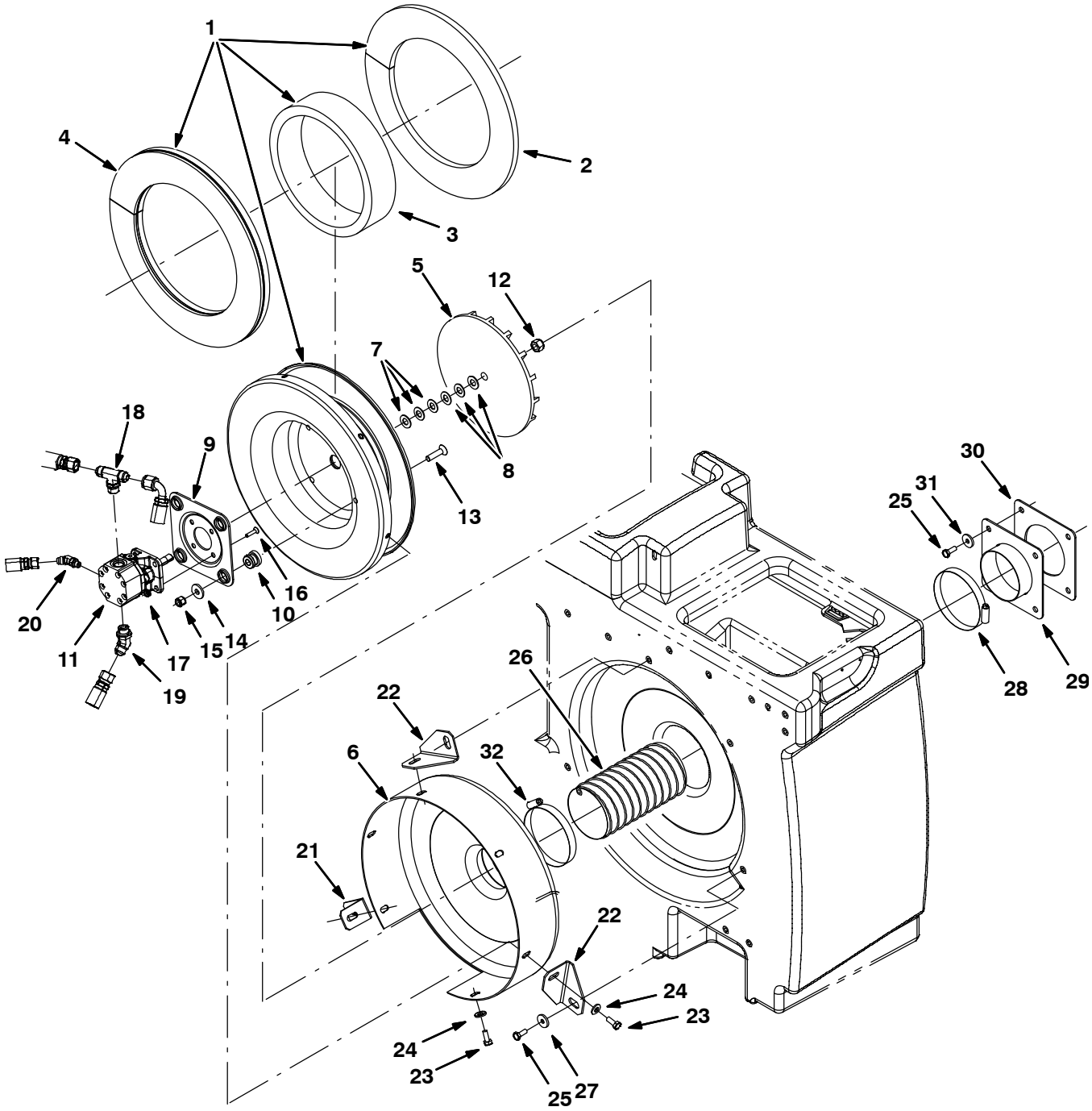

354451 – M20, NA

Fig. 70 – Vacuum Fan Group, Scrubbing (000000–006877)

	Ref.	Part No.	Serial Number	Description	Qty.
▽		9003455	(000000–006877)	Fan Kit, Scrub, Replmt [M20/T20]	1
▲▽	1	9002684	(000000–006877)	Housing Assy, Vacfan, Scrbr	1
▲▲	2	1025888	(000000–006877)	Insulation, Flame–Retardant, 0.50	1
▲▲	3	1025887	(000000–006877)	Insulation, Flame–Retardant, 0.75–0.88	1
▲▲	4	1025872	(000000–006877)	Insulation, Flame–Retardant, 0.75–0.88	1
▲	5	03922	(000000–006877)	Impeller, 9.5d, 18 Bl	1
▲	6	57189	(000000–006877)	Housing Wldt, Vacfan, Front [528]	1
▲	7	75456–3	(000000–006877)	Shim, Washer, 0.88d 0.51b .020	3
▲	8	75456–4	(000000–006877)	Shim, Washer, 0.88d 0.51b .060	3
▲	9	54275A	(000000–006877)	Bracket, Mtg, Motor	1
▲	10	54274	(000000–006877)	Isolator, Vib, Bshg, 1.1d 0.6l .4b 0.78h	4
▲▽	11	9003461	(000000–006877)	Motor Kit, Replmt [M20&T20]	1
▲▲		00954	(000000–006877)	Key, Sq, 0.12 X 0.12, 1.00l (Included With Motor)	1
▲▲		74233	(000000–006877)	Kit, Seal, Motor, Hyd, Gear[Barns]	1
▲▲	12	41130	(000000–006877)	Nut, Low Crown, .50–20	1
▲▲	13	54861	(000000–006877)	Screw, Flt, .38–16 X 1.50, Al	4
▲▲	14	1014563	(000000–006877)	Washer, Flat, 0.40b 1.12d .12, Ss	4
▲▲	15	36643	(000000–006877)	Nut, Hex, Lock, .38–16, Nl, Thin	4
▲▲	16	39534	(000000–006877)	Screw, Flt, .25–20 X 1.00, Al	4
▲▲	17	32981	(000000–006877)	Nut, Hex, Lock, .25–20, Nl	4
▲▲	18	49933	(000000–006877)	Fitting, Hyd, Tee, Jm08/Jm08/Om08, Br	1
▲▲	19	42226	(000000–006877)	Fitting, Hyd, E45, Jm08/Om08	1
▲▲	20	392609	(000000–006877)	Fitting, Hyd, E45, Jm06/Om04	1
▲	21	1020320	(000000–006877)	Angle, Sppt, Fan	1
▲	22	1024891	(000000–006877)	Bracket, Mtg, Fan	2
▲	23	16931	(000000–006877)	Screw, Hex, M8 X 1.25 X 20, 8.8	6
▲	24	41186	(000000–006877)	Washer, Flat, Belleville, .31	6
	25	09740	(000000–006877)	Screw, Hex, M8 X 1.25 X 20, Ss	7
	26	1022377	(000000–006877)	Hose, Flex, 4.00d, 24.0l	1
	27	1014563	(000000–006877)	Washer, Flat, 0.40b 1.12d .12, Ss	3
	28	79380	(000000–006877)	Clamp, Hose, Wormdrive, 3.75–4.62d, .62w	1
	29	1023754	(000000–006877)	Plate Wldt, Hose, Vacuum	1
	30	1024853	(000000–006877)	Gasket, Plt, Hose, Vacuum	1
	31	1017218	(000000–006877)	Washer, Flat, 0.32b 1.00d .12, Ss	4
	32	23498	(000000–006877)	Clamp, Hose, Wormdrive, 3.56–4.50D, .50W	1

Fig. 71 – Vacuum Fan Group, Scrubbing (006878–)

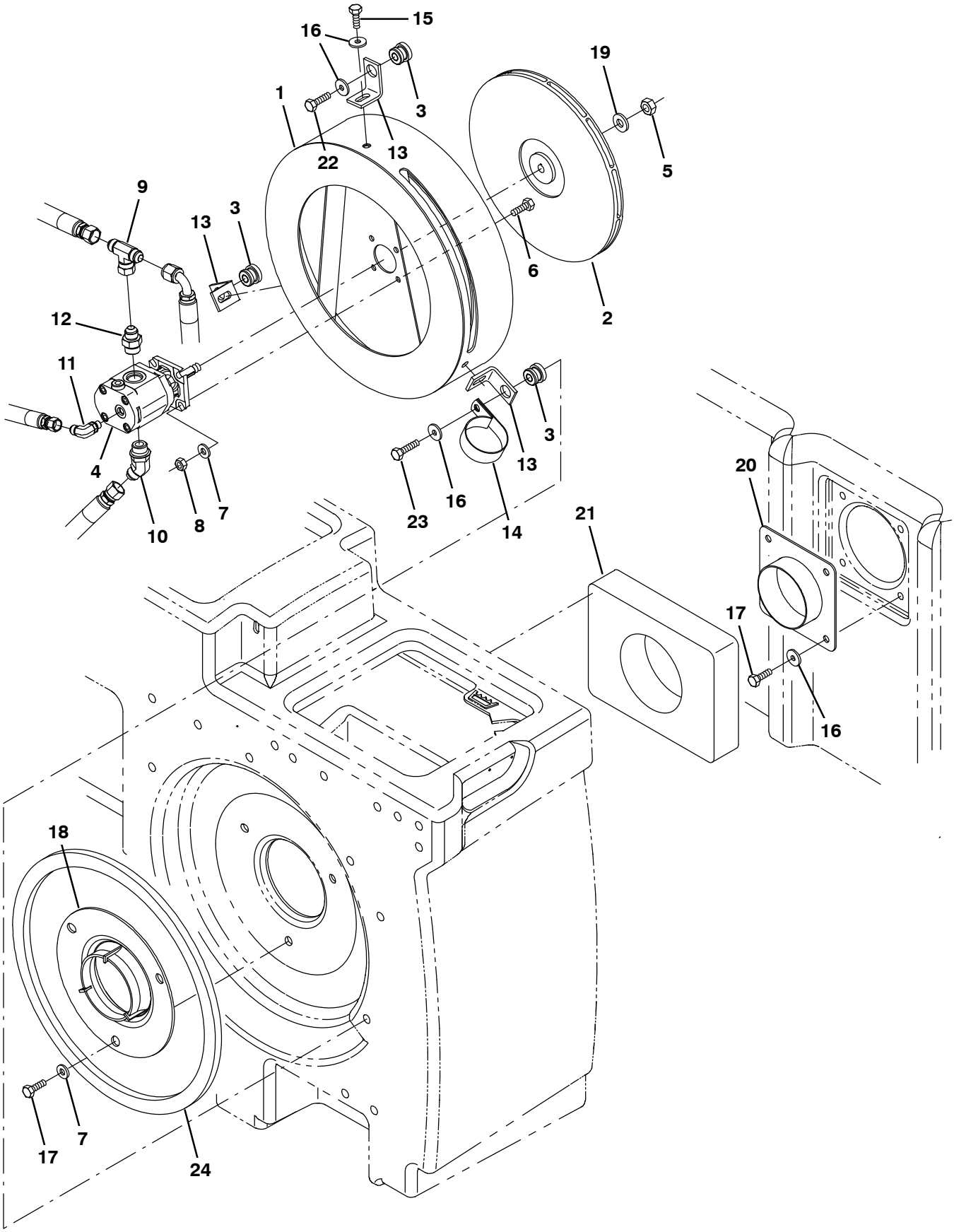

356555 – M20, NA

Fig. 71 – Vacuum Fan Group, Scrubbing (006878–)

Ref.	Part No.	Serial Number	Description	Qty.
1	1068611	(006878–)	Plate Wldt, Mtg, Fan	1
2	1062033	(006878–)	Impeller, 11.81d X 0.500b	1
3	54274	(006878–)	Isolator, Vib, Bshg, 1.1d 0.6l .4b 0.78h	3
4	1071253	(006878–)	Motor, Hyd, Gear, Ext 0.17 Lh 3000	1
5	07788	(006878–)	Nut, Hex, Std, M12 X 1.75, Ss	1
6	09010	(006878–)	Screw, Hex, M8 X 1.25 X 25, Ss	4
7	01685	(006878–)	Washer, Flat, 0.38b 0.88d .08, Ss	7
8	08713	(006878–)	Nut, Hex, Lock, M8 X 1.25, Nl, Ss	4
9	76315	(006878–)	Fitting, Hyd, Tee, Jf08/Jm08/Jm08, Br	1
10	47513	(006878–)	Fitting, Hyd, E45, Jm08/Om10	1
11	77098	(006878–)	Fitting, Hyd, E90, Jm06/Om04	1
12	56692	(006878–)	Fitting, Hyd, Str, Jm08/Om10	1
13	1068644	(006878–)	Angle, Sppt, Fan	3
14	70157	(006878–)	Clamp, Cable, Ss, 2.50d X 1.00w, 1hole	1
15	39277	(006878–)	Screw, Hex, M8 X 1.25 X 25, 8.8	3
16	1017218	(006878–)	Washer, Flat, 0.32b 1.00d .12, Ss	10
17	09740	(006878–)	Screw, Hex, M8 X 1.25 X 20, Ss	7
18	1059100	(006878–)	Housing, Fan, Radial Discharge, Sq Inlet	1
19	36328	(006878–)	Washer, Flat, Belleville, .50	1
20	1023754	(006878–)	Plate Wldt, Hose, Vacuum	1
21	1060716	(006878–)	Gasket, 2.00, 07.87w 10.24l, Adh	1
22	09011	(006878–)	Screw, Hex, M8 X 1.25 X 30, Ss	2
23	09023	(006878–)	Screw, Hex, M8 X 1.25 X 35, Fl, Ss	1
24	1068613	(006878–)	Gasket, Foam, .50, 14.76id 16.54od, Adh	1

Fig. 72 – Vacuum Fan Group, Sweeping

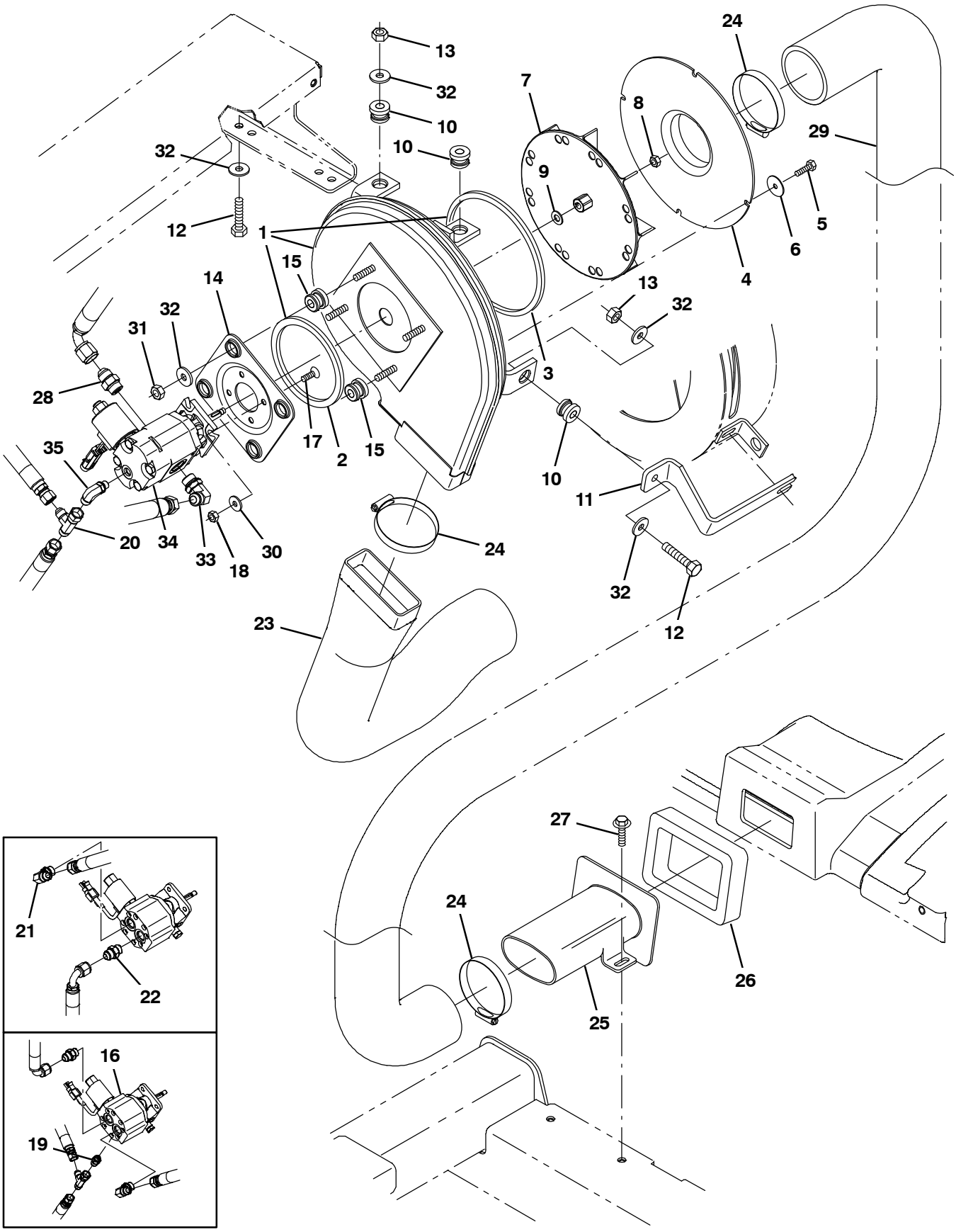

354452 – M20, G/LP, NA

Fig. 72 – Vacuum Fan Group, Sweeping

	Ref.	Part No.	Serial Number	Description	Qty.
▽	1	9002683	(000000–)	Housing Assy, Vacfan, Swpr	1
▲	2	59967	(000000–)	Seal, Ure, 0.38 0.75w 13.2l Adh	1
▲	3	59735	(000000–)	Seal, Ure, 0.38 0.75w 33.0l Adh	1
	4	1018216	(000000–)	Fan Wldt, Vac, Inlet	1
	5	34323	(000000–)	Screw, Hex, .25–20 X 0.75, Nl	4
	6	41178	(000000–)	Washer, Flat, 0.25 Fender	4
	7	74454	(000000–)	Impeller, 9.00d X 1.40w X 0.376b	1
	8	31241	(000000–)	Nut, Hex, Lock, .31–24, Nl, Thin	1
	9	32485	(000000–)	Washer, Flat, 0.38 Sae	1
	10	59649	(000000–)	Isolator, Vib, Bshg, 1.1d 0.6l .4b 0.78h	3
	11	1034388	(000000–006877)	Bar, Isolator, Vacfan [M20 2007]	1
	11	1074010	(006878–)	Bar, Isolator, Vacfan [M20]	1
	12	39285	(000000–)	Screw, Hex, M10 X 1.5 X 40, 8.8	3
	13	41430	(000000–)	Nut, Hex, Lock, M10 X 1.5, Nl	3
	14	54275A	(000000–)	Bracket, Mtg, Motor	1
	15	54274	(000000–)	Isolator, Vib, Bshg, 1.1d 0.6l .4b 0.78h	4
	16	53485	(000000–006877)	Motor, Hyd, Gear, [Ex] .194 R 3000 (See Breakdowns)	1
	17	39534	(000000–)	Screw, Flt, Soc, .25–20 X 1.00, Al	4
	18	32981	(000000–)	Nut, Hex, Lock, .25–20, Nl	4
	19	50960	(000000–006877)	Fitting, Hyd, Str, Jm06/Om04	1
	20	42215	(000000–)	Fitting, Hyd, Tee, Jf06/Jm06/Jm06, Run	1
	21	44868	(000000–001337)	Fitting, Hyd, E90, Jm08/Om08	1
	22	44869	(000000–001337)	Fitting, Hyd, Str, Jm08/Om08	1
	23	1025756	(000000–)	Muffler, Vacfan, 4.0id	1
	24	23498	(000000–)	Clamp, Hose, Wormdrive, 3.56–4.50d, .50w	3
	25	1025841	(000000–)	Tube, Transition, Casting	1
	26	1018209	(000000–)	Gasket, Hppr, Transition	1
	27	1037346	(000000–)	Screw, Hex, M8 X 1.25 X 25, 9.8, Sems	2
	28	44869	(000000–)	Fitting, Hyd, Str, Jm08/Om08	1
	29	1018252	(000000–)	Hose, Flex, Vacuum, 3.5d 32.0l	1
	30	32483	(006878–)	Washer, Flat, 0.25, Sae	4
	31	36643	(000000–)	Nut, Hex, Lock, .38–16, Nl, Thin	4
	32	1014563	(000000–)	Washer, Flat, 0.40b 1.12d .12, Ss	10
	33	44868	(001338–)	Fitting, Hyd, E90, Jm08/Om08	1
	34	1071240	(006878–)	Motor, Hyd, Gear, Ext 0.17 Lh 3000	1
	35	77098	(006878–)	Fitting, Hyd, E90, Jm06/Om04	1

Fig. 73 – Hydraulic Schematic (000000–002699)

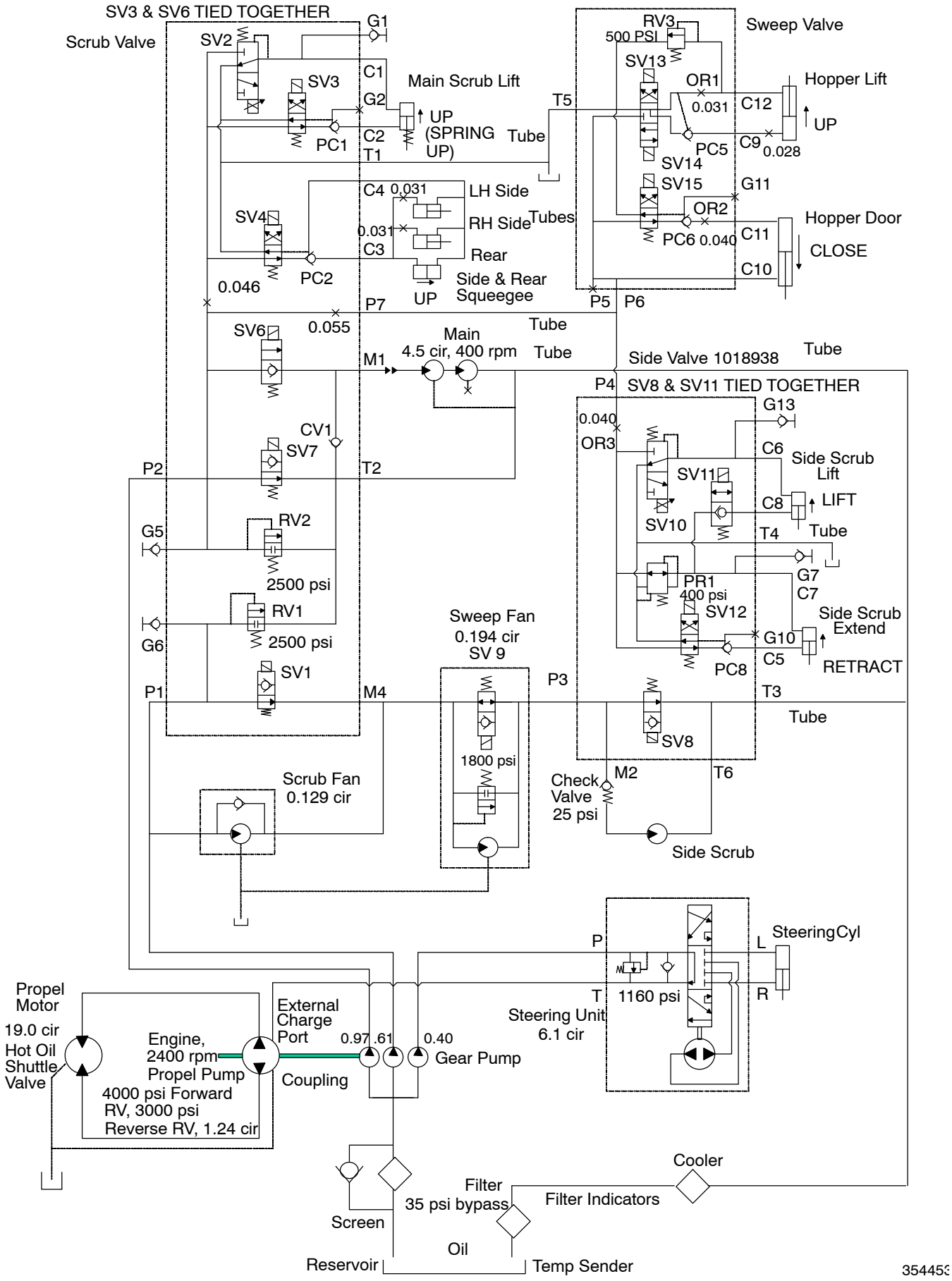

Fig. 74 – Hydraulic Schematic (002700–003297)

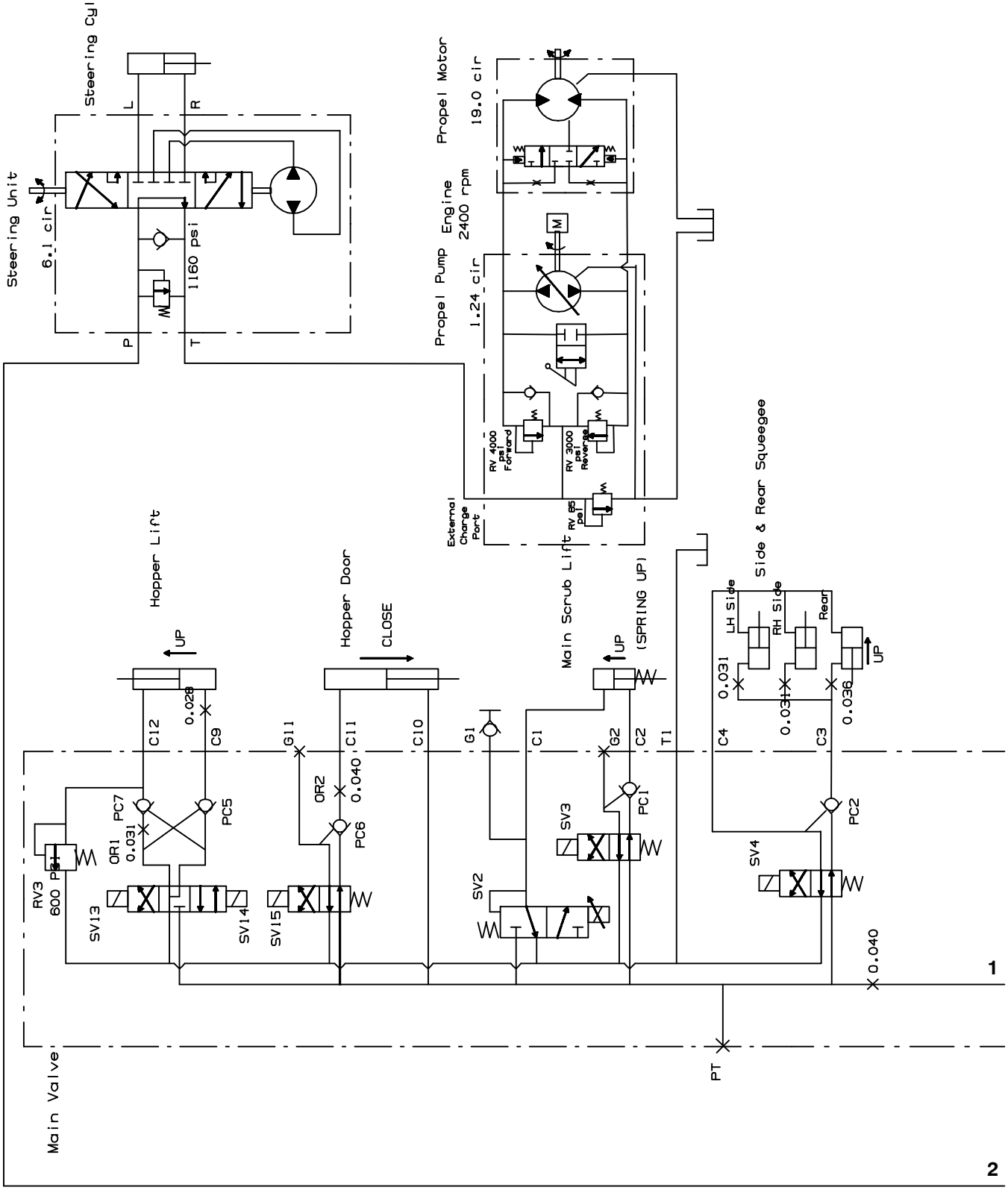

354453, 1018547 – M20

Fig. 74 – Hydraulic Schematic (002700–003297)

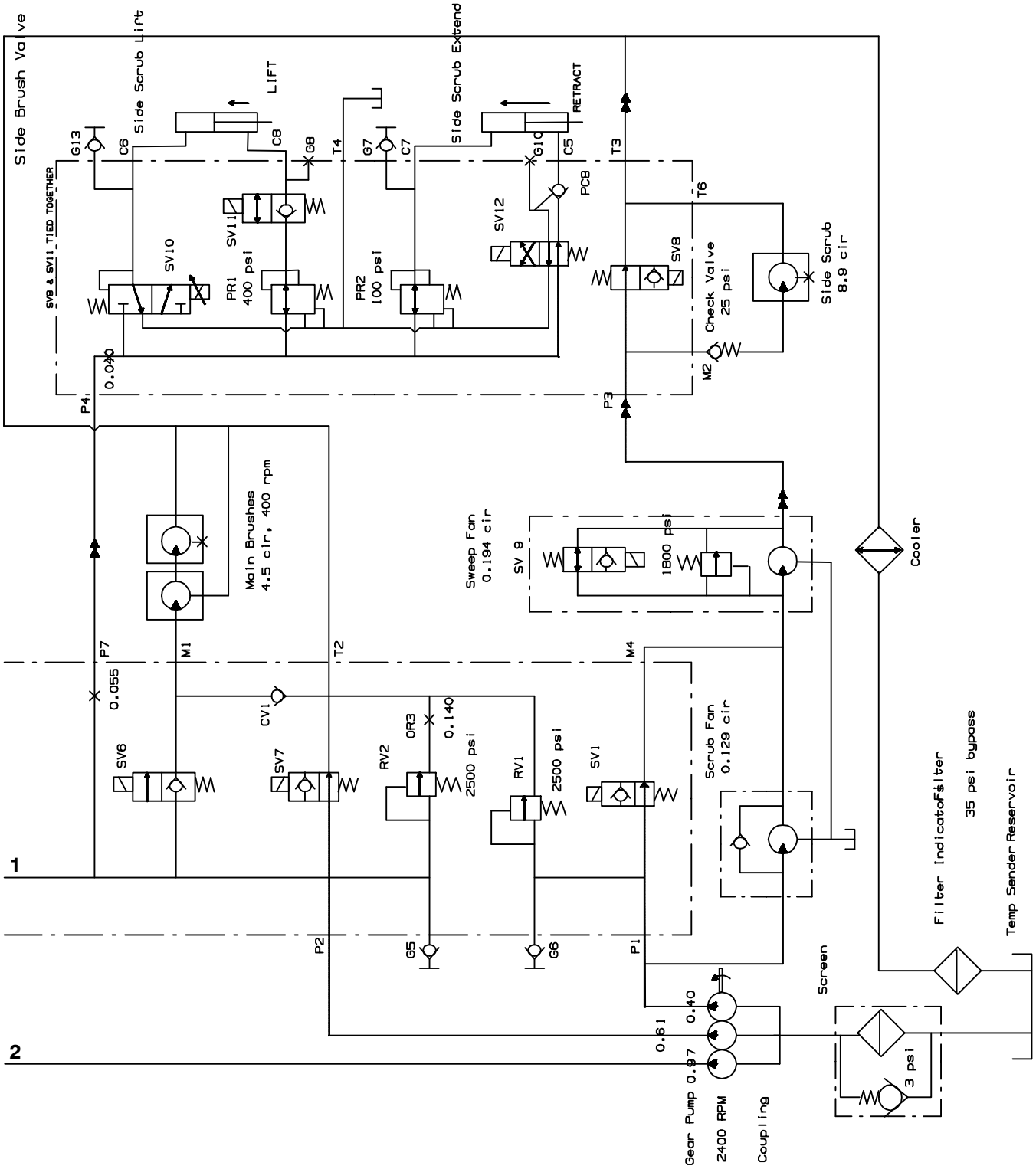

354453, 1018547 – M20

Fig. 75 – Hydraulic Schematic (003298–)

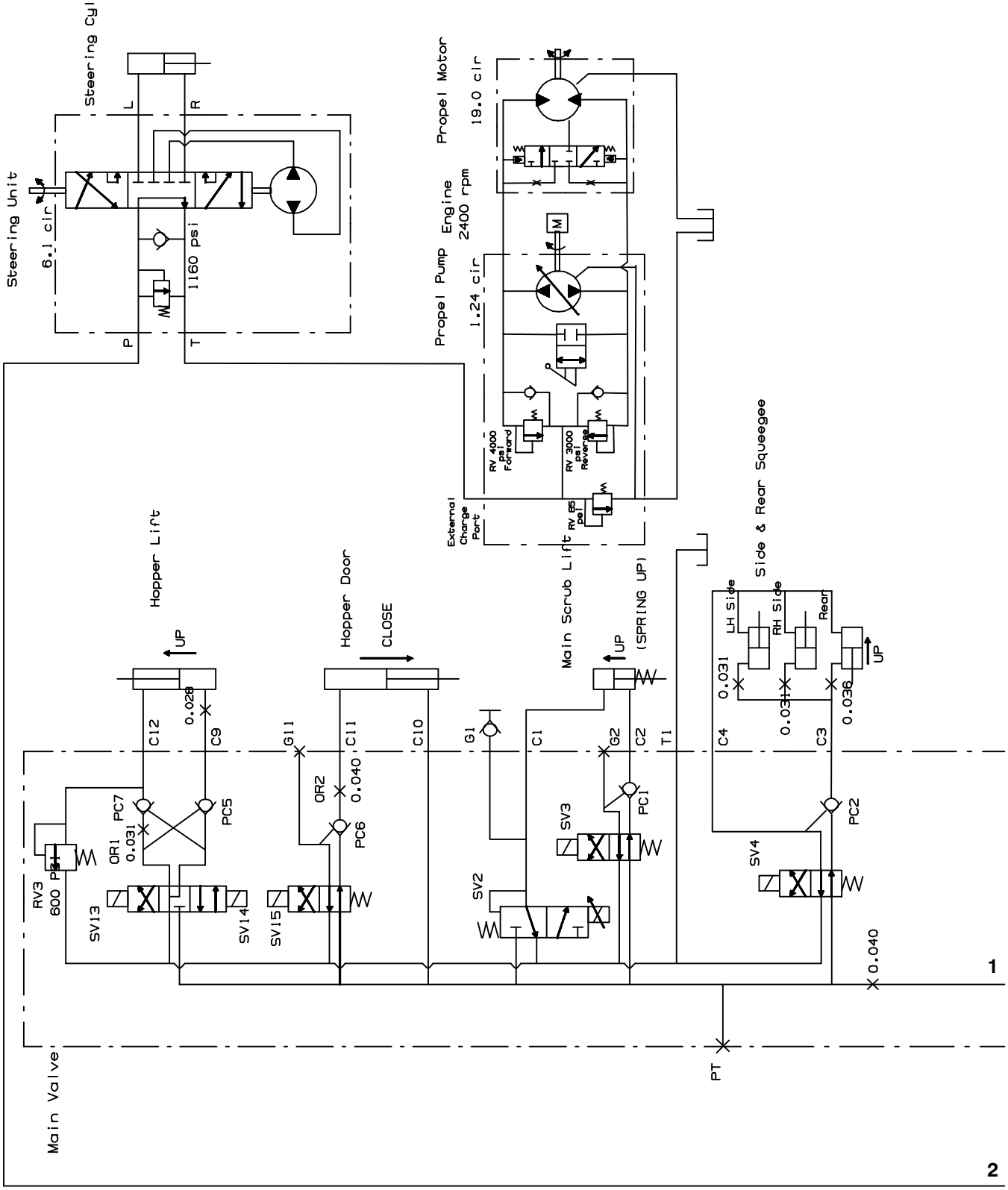

354453, 1018547 – M20

Fig. 75 – Hydraulic Schematic (003298–)

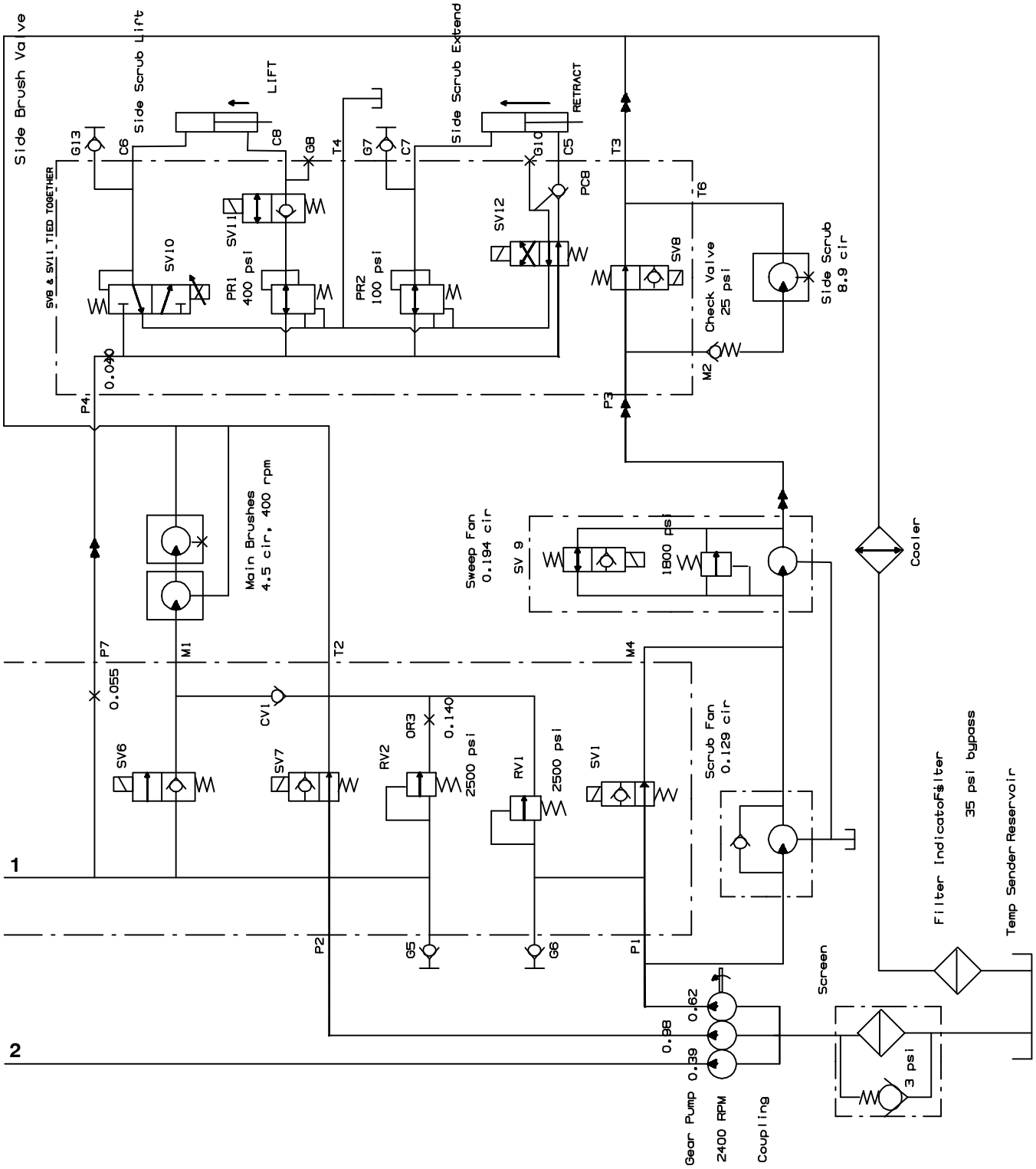

354453, 1018547 – M20

Fig. 76 – Hydraulic Hose Group, Steering and Propel

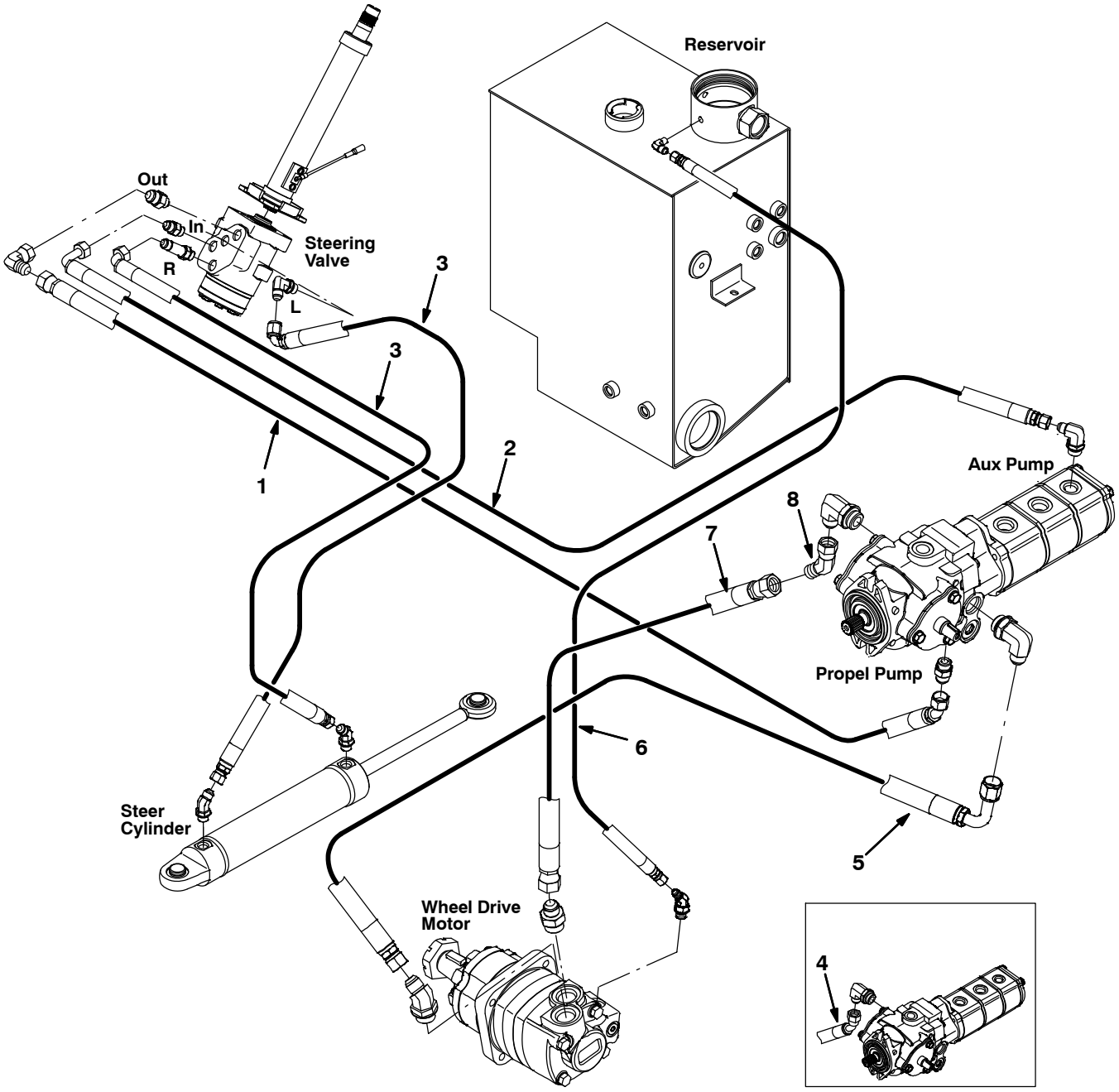

354392

Fig. 76 – Hydraulic Hose Group, Steering and Propel

Ref.	Part No.	Serial Number	Description	Qty.
1	1023609	(000000–)	Hose, Hyd, Tc08, Jf08e45/Jf08str, 96.0	1
2	1023608	(000000–)	Hose, Hyd, Tc06, Jf06e90/Jf06str, 104.0	1
3	396221	(000000–)	Hose, Hyd, Tc06, Jf06e90/Jf06str, 040.0	2
4	1039148	(000000–002183)	Hose Kit, Hyd, Propel, Ci [M20/T20]	1
5	1023488	(000000–)	Hose, Hyd, Spcl, Jf10e90/Jf10str, 63.0	1
6	1030404	(000000–)	Hose, Hyd,Med04, Jf04str/Jf04str, 066.0	1
7	1038569	(002184–)	Hose, Hyd, Spcl, Jf10str/Jf10str, 56.5	1
8	54017	(002184–)	Fitting, Hyd, E45, Jf10/Jm10	1

Fig. 77 – Hydraulic Hose Group, Pump and Vacuum Fans (000000–006877)

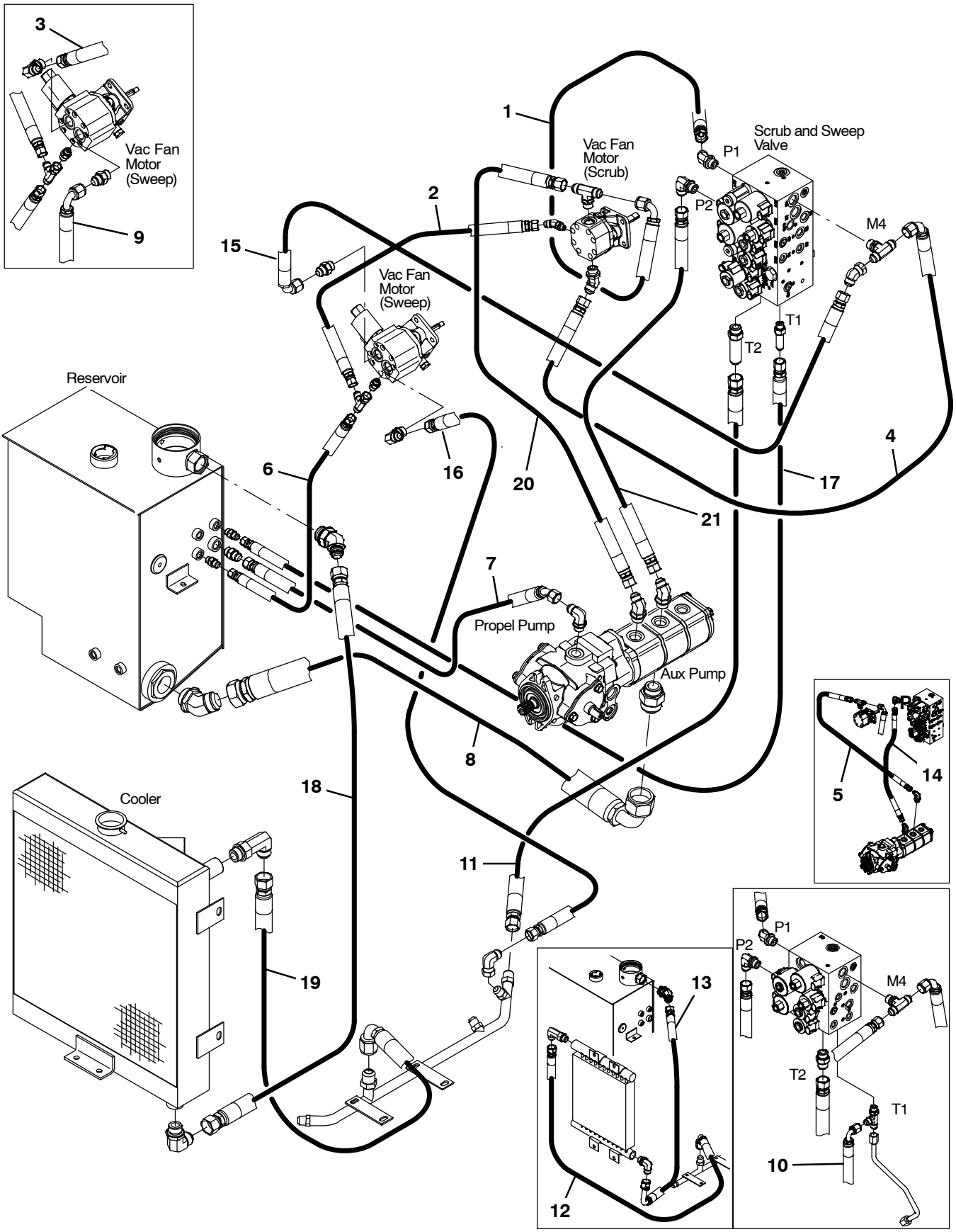

354393 – M20 G/LP

Fig. 77 – Hydraulic Hose Group, Pump and Vacuum Fans (000000–006877)

Ref.	Part No.	Serial Number	Description	Qty.
1	71741	(000000–006877)	Hose, Hyd, Tc08, Jf08e90/Jf08str, 046.0	1
2	361044	(000000–006877)	Hose, Hyd, Med06, Jf06str/Jf06str, 018.0	1
3	381862	(000000–001337)	Hose, Hyd, Tc08, Jf08str/Jf08str, 024.0	1
4	396255	(000000–006877)	Hose, Hyd, Tc08, Jf08str/Jf08e90, 031.0	1
5	1026645	(000000–003297)	Hose, Hyd, Tc08, Jf08e45/Jf08str, 26.0	1
6	16431	(000000–006877)	Hose, Hyd, Med06, Jf06str/Jf06str, 022.0	1
7	1023607	(000000–006877)	Hose, Hyd, Med08, Jf08str /Jf08e45, 21.0	1
8	1023611	(000000–006877)	Hose, Hyd, Suc20, Jf20str /Jf20e90, 29.0	1
9	396266	(000000–001337)	Hose, Hyd, Med08, Jf08e90/Jf08str, 031.0	1
10	71735	(000000–002699)	Hose, Hyd, Med06, Jf06e90/Jf06str, 042.0	1
11	1025547	(000000–002699)	Hose, Hyd, Med10, Jf10str/Jf10str, 41.0	1
11	1040655	(002700–006877)	Hose, Hyd, Med10, Jf10Str/Jf10Str, 036.0	1
12	396438	(000000–003038)	Hose, Hyd, Tc12, Jf12e90/Jf12str, 044.0	1
13	1023487	(000000–003038)	Hose, Hyd, Med12, Jf12e90/Jf12str, 50.0	1
14	1023606	(000000–003297)	Hose, Hyd, Tc08, Jf08str/Jf08str, 21.0	1
15	381858	(001338–002699)	Hose, Hyd, Tc08, Jf08e90/Jf08str, 024.0	1
15	1040216	(002700–005999)	Hose, Hyd, Tc08, Jf08E90/Jf08Str, 029.0	1
15	71741	(006000–006877)	Hose, Hyd, Tc08, Jf08e90/Jf08str, 046.0	1
16	1036945	(001338–006877)	Hose, Hyd, Tc08, Jf08str/Jf08str, 031.0	1
17	71556	(002700–006877)	Hose, Hyd, Med06, Jf06Str/Jf06Str, 042.0	1
18	1050437	(003039–005999)	Hose, Hyd, Med12, Jf12str/Jf12str, 052.0	1
18	1028145	(006000–006877)	Hose, Hyd, Med12, Jf12str/Jf12str, 066.0	1
19	1050436	(003039–006877)	Hose, Hyd, Med12, Jf12e90/Jf12str, 029.0	1
20	1026645	(003298–006877)	Hose, Hyd, Tc08, Jf08E45/Jf08Str, 026.0	1
21	1023606	(003298–006877)	Hose, Hyd, Tc08, Jf08Str/Jf08Str, 021.0	1

Fig. 78 – Hydraulic Hose Group, Pump and Vacuum Fans (006878–)

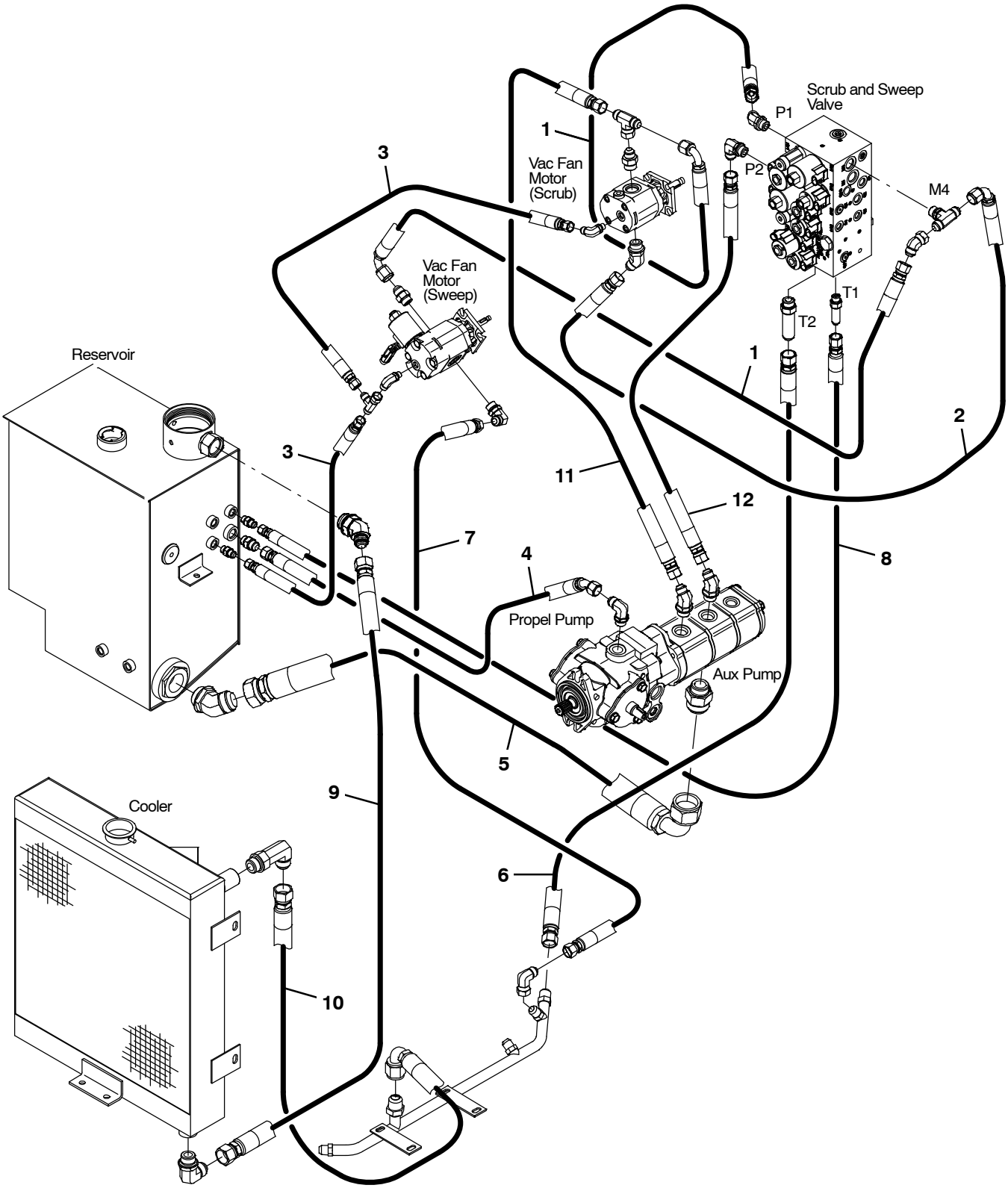

356559 – M20, G/LP

Fig. 77 – Hydraulic Hose Group, Pump and Vacuum Fans (006878–)

Ref.	Part No.	Serial Number	Description	Qty.
1	71741	(006878–)	Hose, Hyd, Tc08, Jf08e90/Jf08str, 046.0	2
2	396255	(006878–)	Hose, Hyd, Tc08, Jf08str/Jf08e90, 031.0	1
3	16431	(006878–)	Hose, Hyd, Med06, Jf06str/Jf06str, 022.0	2
4	1023607	(006878–)	Hose, Hyd, Med08, Jf08str /Jf08e45, 21.0	1
5	1023611	(006878–)	Hose, Hyd, Suc20, Jf20str /Jf20e90, 29.0	1
6	1040655	(006878–)	Hose, Hyd, Med10, Jf10Str/Jf10Str, 036.0	1
7	1036945	(006878–)	Hose, Hyd, Tc08, Jf08str/Jf08str, 031.0	1
8	71556	(006878–)	Hose, Hyd, Med06, Jf06Str/Jf06Str, 042.0	1
9	1028145	(006878–)	Hose, Hyd, Med12, Jf12str/Jf12str, 066.0	1
10	1050436	(006878–)	Hose, Hyd, Med12, Jf12e90/Jf12str, 029.0	1
11	1026645	(006878–)	Hose, Hyd, Tc08, Jf08E45/Jf08Str, 026.0	1
12	1023606	(006878–)	Hose, Hyd, Tc08, Jf08Str/Jf08Str, 021.0	1

Fig. 79 – Hydraulic Hose Group, Brush and Hopper

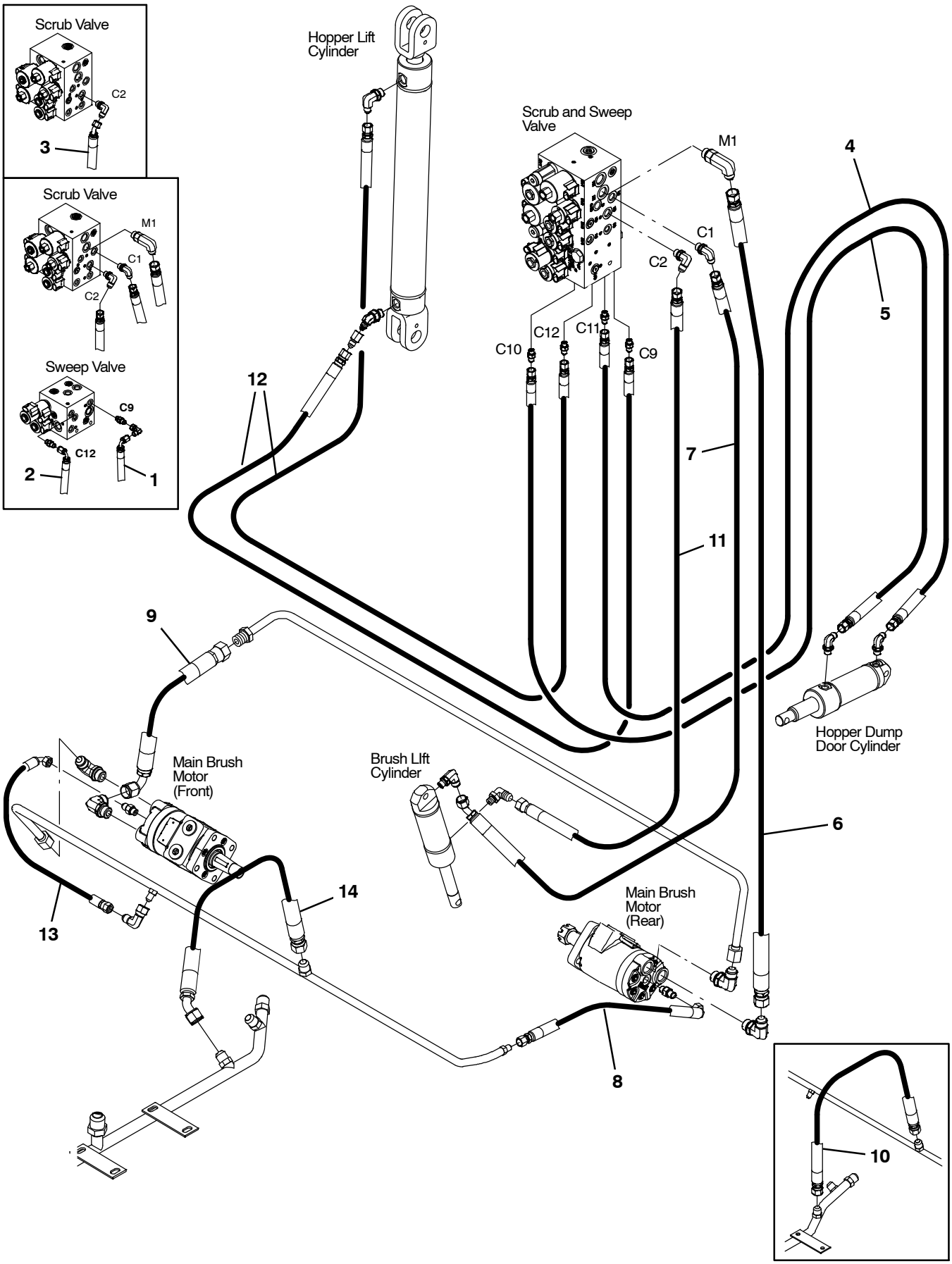

354390

Fig. 79 – Hydraulic Hose Group, Brush and Hopper

Ref.	Part No.	Serial Number	Description	Qty.
1	1027320	(000000–002699)	Hose, Hyd, Tc04, Jf04str /Jf04e90, 88.0	1
2	1027321	(000000–002699)	Hose, Hyd, Tc04, Jf04str /Jf04e90, 70.0	1
3	1025548	(000000–001337)	Hose, Hyd, Tc06, Jf06str /Jf06e45, 54.0	1
4	1026733	(000000–002699)	Hose, Hyd, Spcl, Jf04str/Jf04str, 115.0	1
4	1042775	(002700–)	Hose, Hyd, Spcl, Jf04str/Jf04str, 133.0	1
5	1024688	(000000–002699)	Hose, Hyd, Spcl, Jf04str/Jf04str, 121.0	1
5	1042776	(002700–)	Hose, Hyd, Spcl, Jf04str/Jf04str, 127.0	1
6	1024764	(000000–)	Hose, Hyd, Tc08, Jf08str/Jf08str, 48.0	1
7	1023769	(000000–)	Hose, Hyd, Tc 06, Jf06str /Jf06e45, 56.0	1
8	57946	(000000–)	Hose, Hyd, Med04, Jf04e90/Jf04str, 016.0	1
9	1025544	(000000–)	Hose, Hyd, Tc08, Jf08e90/Jf08str, 13.0	1
10	51754	(000000–005999)	Hose, Hyd, Med08, Jf08str/Jf08str, 022.0	1
11	1036939	(001338–)	Hose, Hyd, Tc06, Jf06str/Jf06str, 054.0	1
12	1040628	(002700–)	Hose, Hyd, Tc04, Jf04str/Jf04str, 096.0	2
13	387281	(003057–)	Hose, Hyd, Tc04, Jf04e90/Jf04str, 020.0	1
14	364978	(006000–006697)	Hose, Hyd, Med08, Jf08e45/Jf08str, 029.0	1
14	1041391	(006698–)	Hose, Hyd, Tc08, Jf08e45/Jf08str, 018.0	1

Fig. 80 – Hydraulic Hose Group, Squeegee Lift

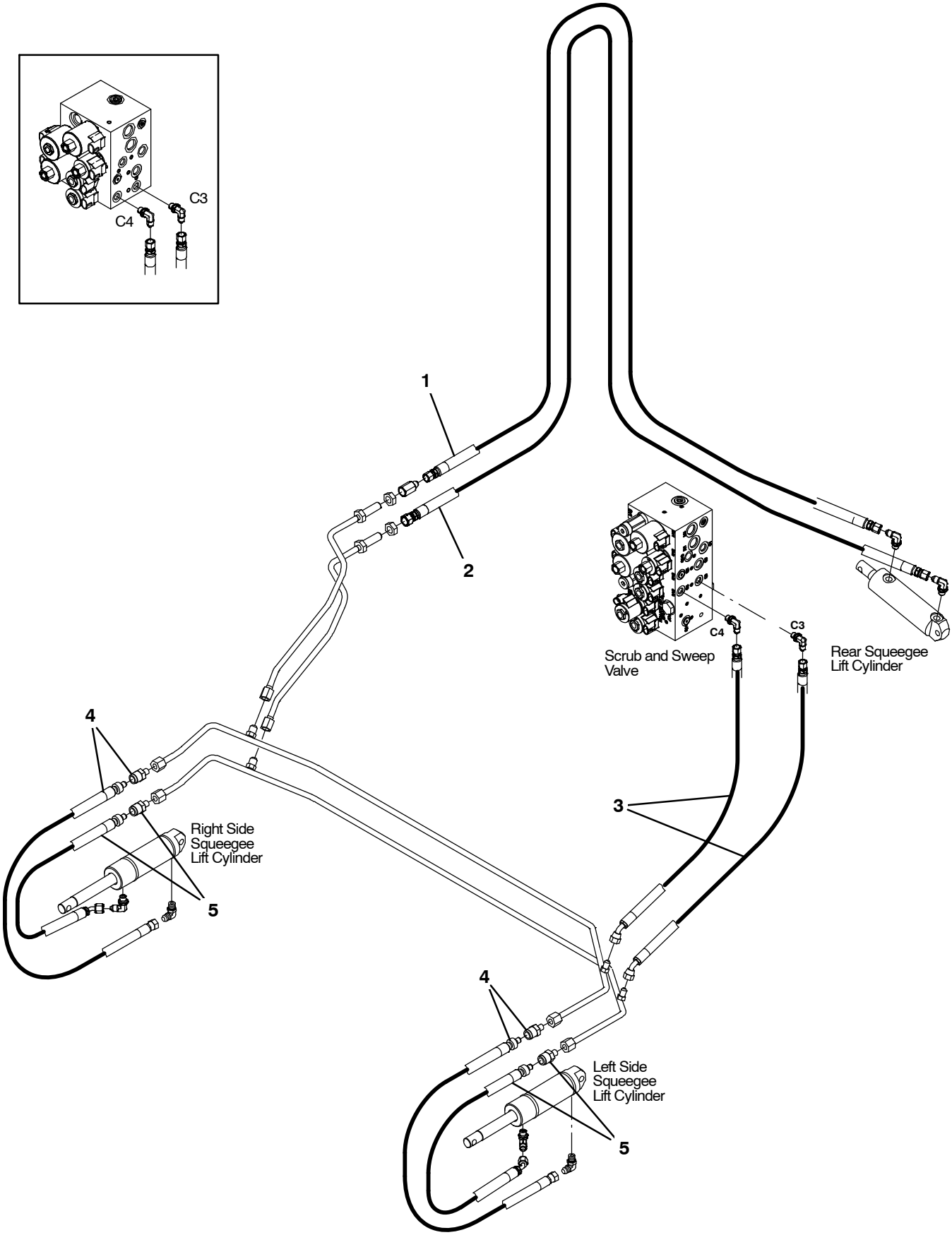

354391

Fig. 80 – Hydraulic Hose Group, Squeegee Lift

Ref.	Part No.	Serial Number	Description	Qty.
1	1024688	(000000–)	Hose, Hyd, Spcl, Jf04str/Jf04str, 121.0	1
2	1025551	(000000–)	Hose, Hyd, Spcl, Jf04str/Jf06str, 125.0	1
3	1030709	(000000–)	Hose, Hyd,Tc 04, Jf04str /Jf04e45 , 35.0	2
4	1037042	(000000–002555)	Hose, Hyd, Tc04, Jf04e45/Qm06, 028.0	2
4	1045759	(002556–)	Hose, Hyd, Tco4, Jf04Str/Qm06, 028.0	2
5	1037053	(000000–)	Hose, Hyd, Tc04, Jf04e45/Qm06, 026.0	2

Fig. 81 – Hydraulic Pumps Group

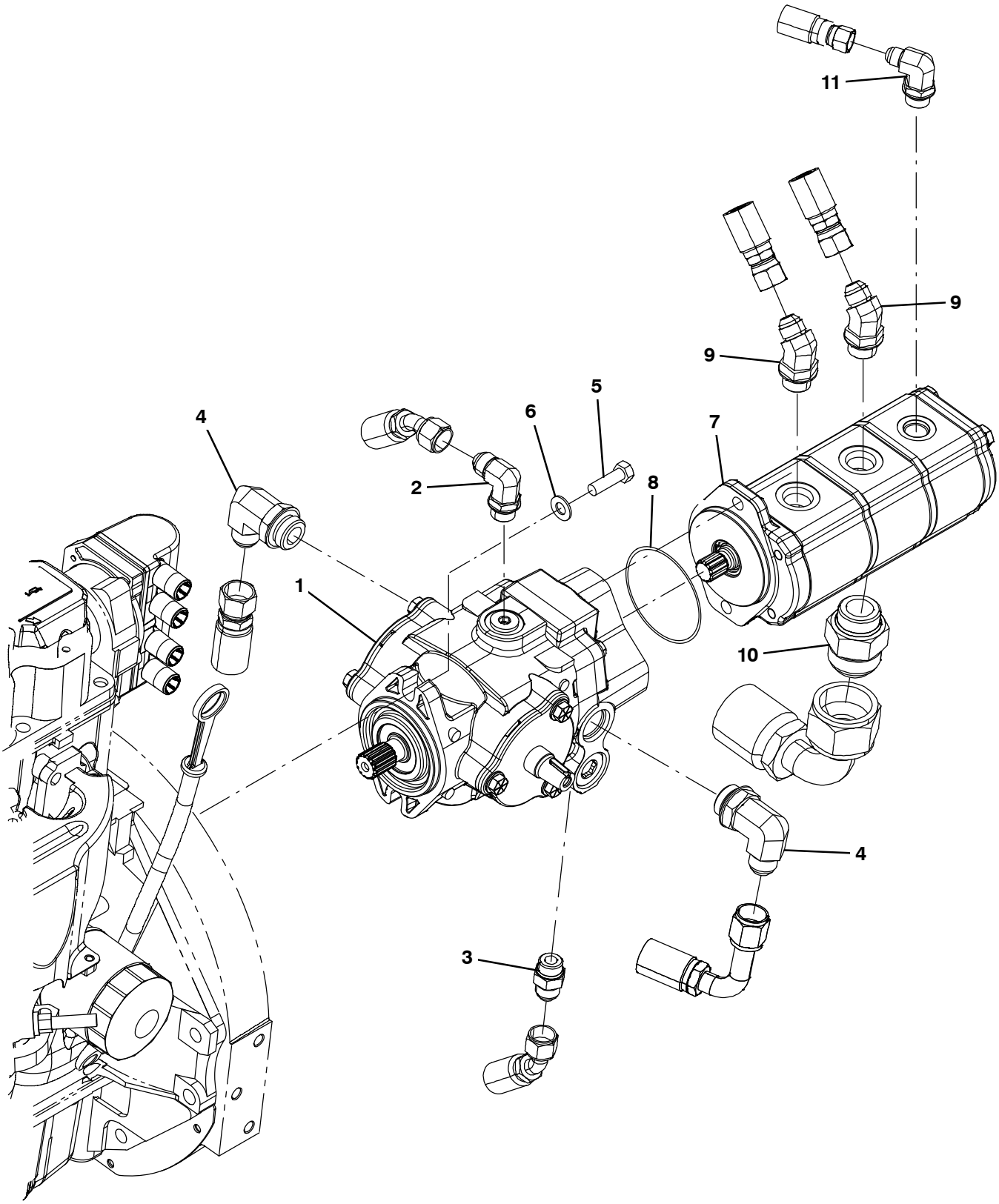

354454

Fig. 81 – Hydraulic Pumps Group

Ref.	Part No.	Serial Number	Description	Qty.
1	1024251	(000000–)	Pump, Hyd, Piston, Var, 1.24 4000, Cw (See Breakdowns)	1
2	44868	(000000–)	Fitting, Hyd, E90, Jm08/Om08	1
3	44869	(000000–)	Fitting, Hyd, Str, Jm08/Om08	1
4	53076	(000000–)	Fitting, Hyd, E90, Jm10/Om12	2
5	21198	(000000–)	Screw, Hex, .38–16 X 1.25, 5	2
6	32485	(000000–)	Washer, Flat, 0.38 Sae	2
7	9007142	(000000–)	Pump Kit, Mtg, Aux, Ci [M20 & T20]	1
8	65145–1	(000000–)	Seal, Org, .069 X 3.06id	1
9	47513	(000000–)	Fitting, Hyd, E45, Jm08/Om10	2
10	67811	(000000–)	Fitting, Hyd, Str, Jm20/Om16	1
11	47512	(000000–)	Fitting, Hyd, E90, Jm06/Om08	1

Fig. 82 – Hydraulic Cooler and Tubes Group

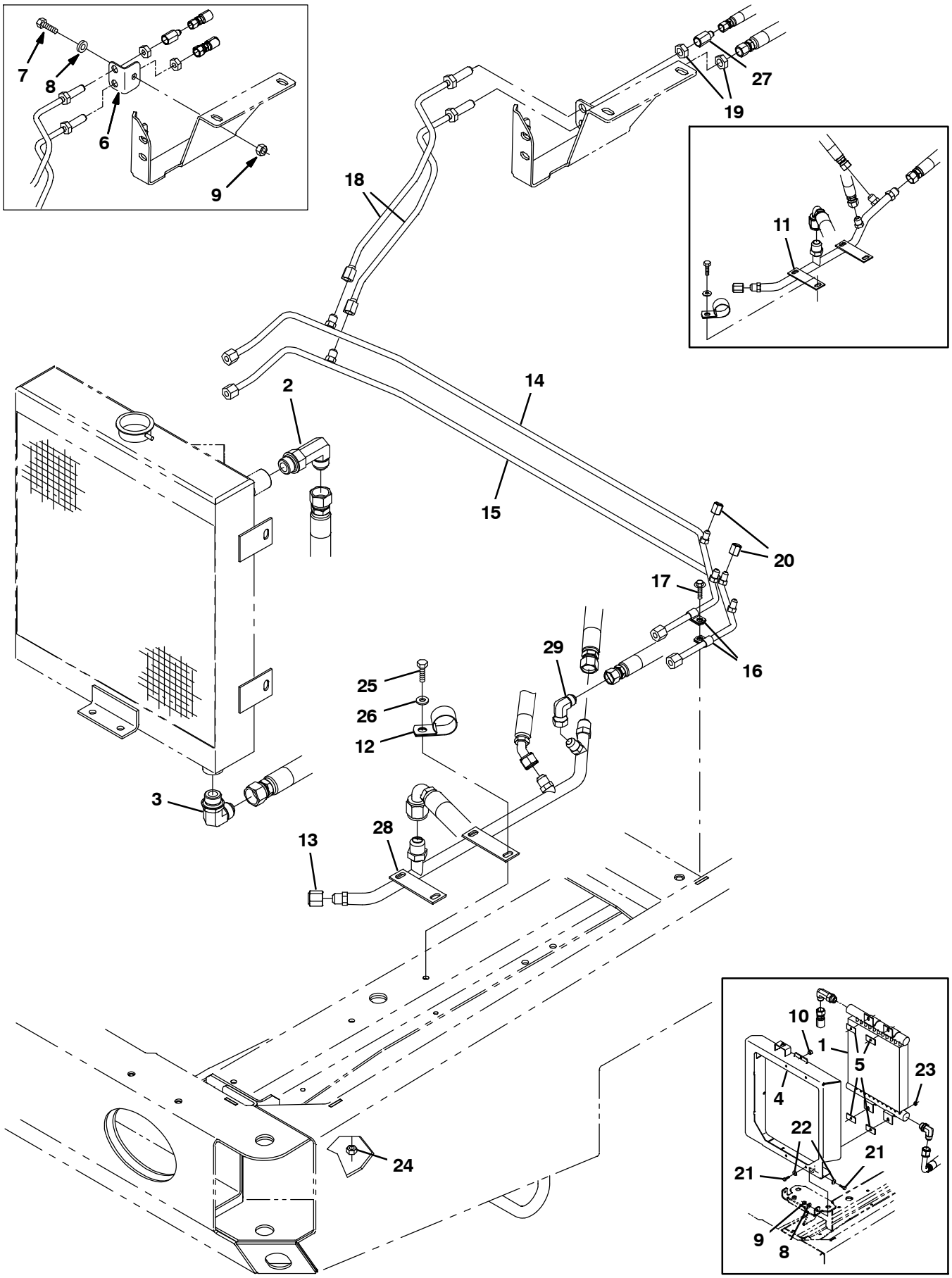

354455

Fig. 82 – Hydraulic Cooler and Tubes Group

Ref.	Part No.	Serial Number	Description	Qty.
1	13698	(000000–003038)	Cooler, Hyd, 25gpm 325btu Of12 13x12x2	1
2	46481	(000000–)	Fitting, Hyd, E90, Jm12/Om12	1
3	62471	(000000–)	Fitting, Hyd, E90, Jm12/Om12, L	1
4	1026319	(000000–003038)	Bracket Wldt, Cooler, Hyd Fluid	1
5	1040318	(000000–003038)	Pad, Tank, Hyd [W/Psa]	4
6	1026647	(000000–007328)	Angle, Mtg, Stl, .12 1.6 1.6 02.2l	1
7	39283	(000000–007328)	Screw, Hex, M10 X 1.5 X 25, 8.8	1
8	32492	(000000–007328)	Washer, Flat, 0.38 Std	1
9	41430	(000000–007328)	Nut, Hex, Lock, M10 X 1.5, Nl	1
10	51787	(000000–003038)	Bumper, Rbr, 0.6d 0.34t .3d Tip	1
11	1036959	(000000–005999)	Tube, Hyd, Main Return	1
12	53466	(000000–)	Clamp, Cable, Stl, 1.50d X 1.00w, 1h	1
13	60090	(000000–)	Fitting, Hyd, Cap, Jf08	1
14	1028821	(000000–)	Tube, Hyd, Sqge	1
15	1028822	(000000–)	Tube, Hyd, Sqge	1
16	40678	(000000–)	Clamp, Cable, Stl, 0.44d X 0.62w, 1h	2
17	74455	(000000–)	Screw, Hex, M6 X 1.0 X 12, Fmg	1
18	1028823	(000000–)	Tube, Hyd, Rear Sqge [M20]	2
19	35904	(000000–)	Nut, Ftg, Hyd, 0.56–18	2
20	50161	(000000–)	Fitting, Hyd, Cap, Jf04	2
21	39277	(000000–003038)	Screw, Hex, M8 X 1.25 X 25, 8.8	8
22	32491	(000000–003038)	Washer, Flat, 0.31, Std	8
23	07791	(000000–003038)	Nut, Hex, Flng, M8 X 1.25	8
24	41430	(000000–)	Nut, Hex, Lock, M10 X 1.5, Nl	2
25	39277	(000000–)	Screw, Hex, M8 X 1.25 X 25, 8.8	2
26	32491	(000000–)	Washer, Flat, 0.31, Std	2
27	47752	(000000–)	Fitting, Hyd, Str, Jf06/Jm04	1
28	1071173	(006000–)	Tube, Hyd, Main Return [G/Lp Mit2013]	1
29	17980	(006000–)	Fitting, Hyd, E90, Jf08/Jm08	1

Fig. 83 – Hydraulic Reservoir Group

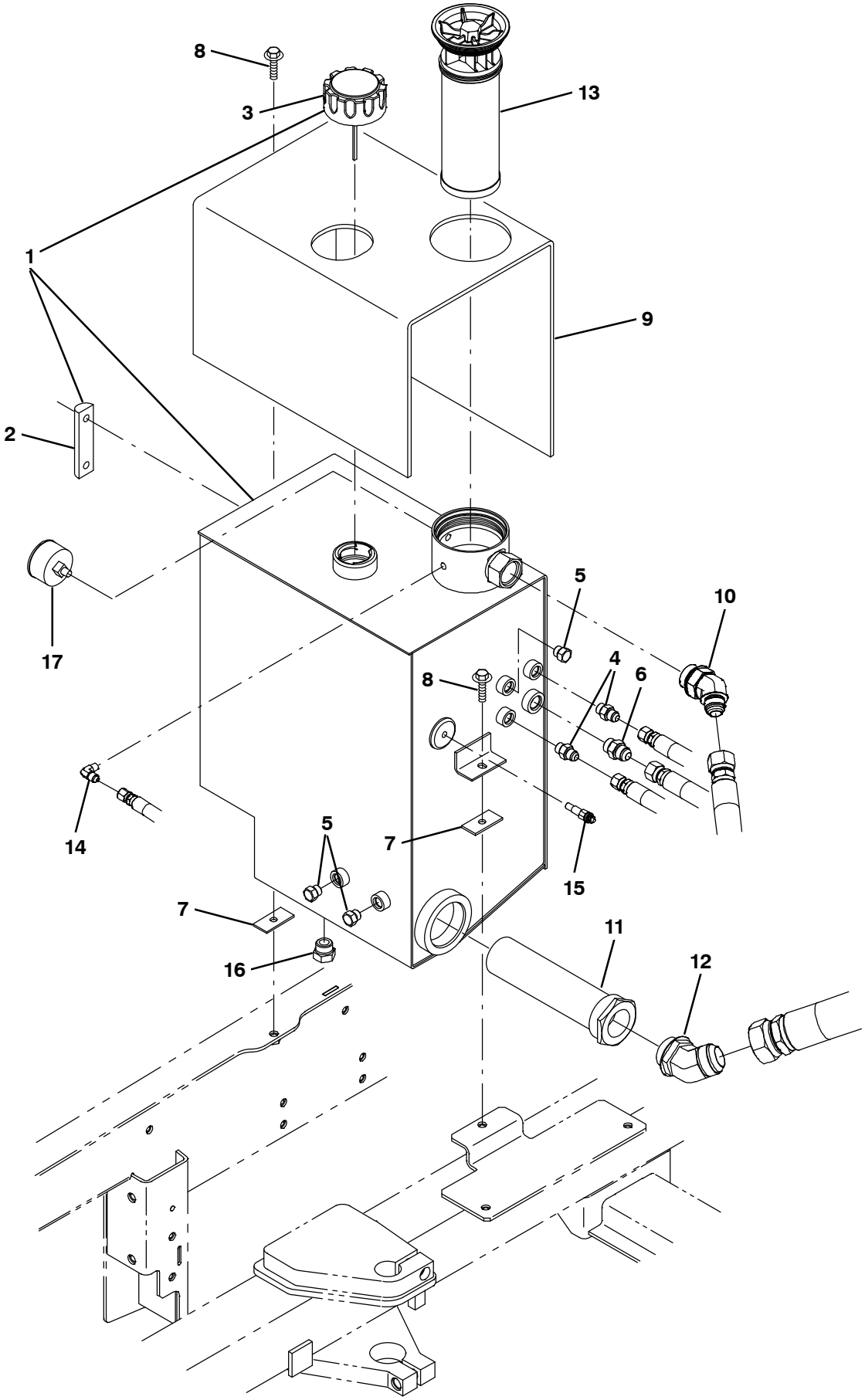

354456 – NA

Fig. 83 – Hydraulic Reservoir Group

	Ref.	Part No.	Serial Number	Description	Qty.
▽	1	9002398	(000000–)	Reservoir, Hyd, 10.0Gal, Replmt	1
▲	2	65215	(000000–)	Gauge, Sensing, Level	1
▲	3	25122	(000000–)	Cap, Breather, Hyd, 2.4 Ds	1
	4	56690	(000000–)	Fitting, Hyd, Str, Jm06/Om06	2
	5	46482	(000000–)	Fitting, Hyd, Plug, Om06	3
	6	44869	(000000–)	Fitting, Hyd, Str, Jm08/Om08	1
	7	1040318	(000000–)	Pad, Tank, Hyd [W/Psa]	2
	8	1037354	(000000–)	Screw, Hex, M8 X 1.25 X 30, 9.8, Sems	2
	9	1034878	(000000–)	Insulation, Thermal, Hydraulic Blanket	1
	10	1023545	(000000–)	Fitting, Hyd, E45, Jm12/Om16	1
	11	31613	(000000–)	Strainer, Hyd, 25gpm 100mesh Psi	1
	12	71726	(000000–)	Fitting, Hyd, E45, Jm20/Om20	1
	13	1021579	(000000–)	Filter Assy, Hyd, 10mic	1
	14	55455	(000000–)	Fitting, Hyd, E90, Jm04/Pm02	1
	15	58592	(000000–)	Send–Unit, Water, Temp, 04npt 113oh/195d	1
	16	40362	(000000–)	Fitting, Hyd, Plug, Om10	1
	17	1025132	(000000–)	Indicator, Press, 60psi	1

Fig. 84 – Hydraulic Valves Group (000000–002699)

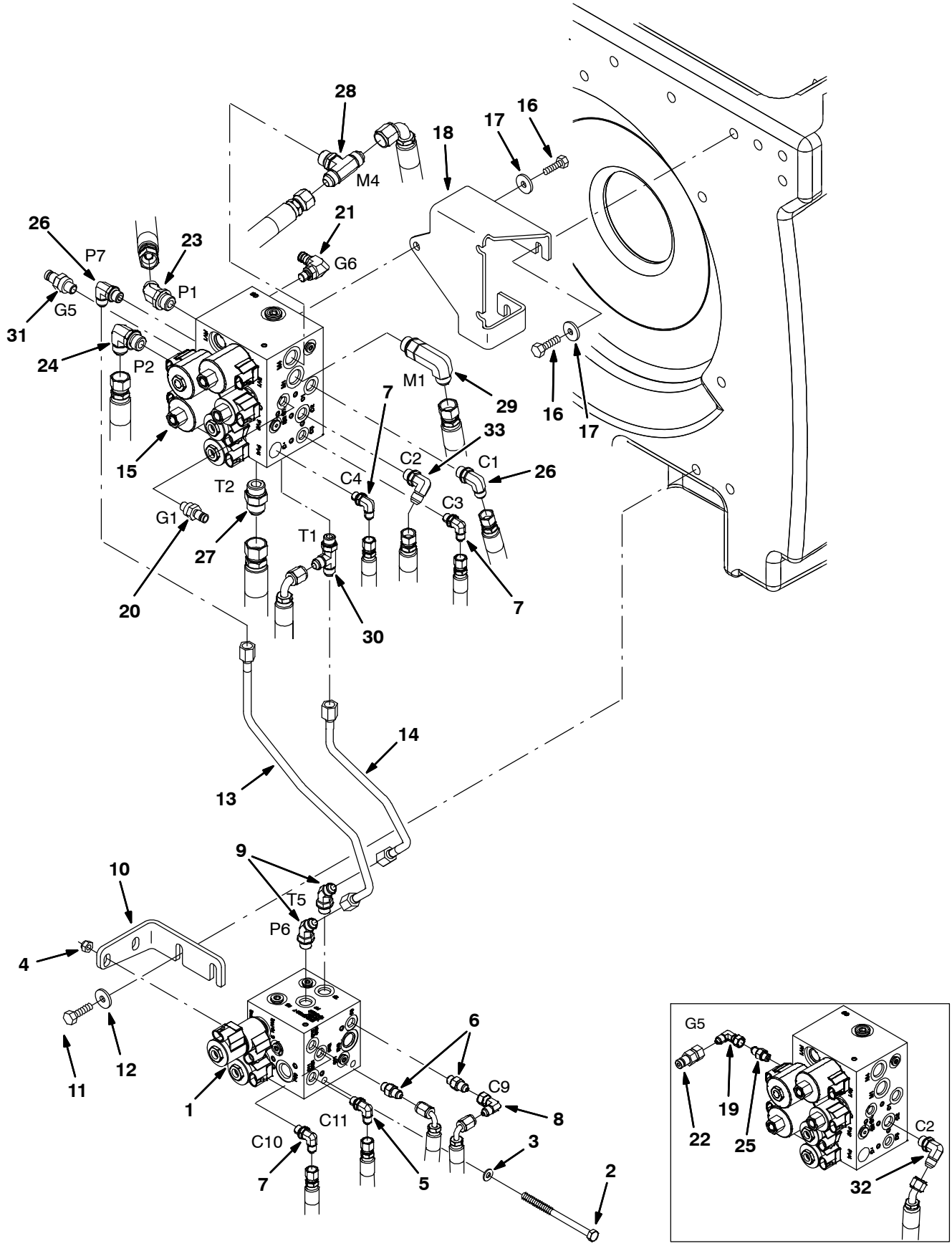

354457

Fig. 84 – Hydraulic Valves Group (000000–002699)

Ref.	Part No.	Serial Number	Description	Qty.
1	1018936	(000000–002699)	Valve, Cntrl, Hyd [M20] (See Breakdowns)	1
2	49883	(000000–002699)	Screw, Hex, M8 X 1.25 X 120, 8.8, Fl	2
3	32491	(000000–002699)	Washer, Flat, 0.31, Std	2
4	08709	(000000–002699)	Nut, Hex, Lock, M8 X 1.25, Nl	2
5	77097	(000000–002699)	Fitting, Hyd, E90, Jm04/Om04	2
6	55586	(000000–002699)	Fitting, Hyd, Str, Jm04/Om04	2
7	77097	(000000–002699)	Fitting, Hyd, E90, Jm04/Om04	2
8	39210	(000000–002699)	Fitting, Hyd, E90, Jf04/Jm04	1
9	47522	(000000–002699)	Fitting, Hyd, E45, Jm06/Om06	2
10	1020708	(000000–002699)	Bracket, Mtg, Valve, Hyd, Swp	1
11	09740	(000000–002699)	Screw, Hex, M8 X 1.25 X 20, Ss	2
12	1017218	(000000–002699)	Washer, Flat, 0.32b 1.00d .12, Ss	2
13	1022482	(000000–002699)	Tube, Hyd, Swp	1
14	1022484	(000000–002699)	Tube, Hyd, Swp	1
15	1020394	(000000–002699)	Valve, Cntrl, Hyd (See Breakdowns)	1
16	09740	(000000–002699)	Screw, Hex, M8 X 1.25 X 20, Ss	6
17	1017218	(000000–002699)	Washer, Flat, 0.32b 1.00d .12, Ss	6
18	1021991	(000000–002699)	Bracket, Mtg, Valve, Hyd, Scb	1
19	39210	(000000–001271)	Fitting, Hyd, E90, Jf04/Jm04	1
20	395973	(000000–002699)	Fitting, Hyd, Str, Om04/Qm04	1
21	395974	(000000–002699)	Fitting, Hyd, E90, Om04/Qm04	1
22	396476	(000000–001271)	Fitting, Hyd, Str, Jf04/Qm04	1
23	42226	(000000–002699)	Fitting, Hyd, E45, Jm08/Om08	1
24	44868	(000000–002699)	Fitting, Hyd, E90, Jm08/Om08	1
25	55586	(000000–001271)	Fitting, Hyd, Str, Jm04/Om04	1
26	56820	(000000–002699)	Fitting, Hyd, E90, Jm06/Om06	2
27	46480	(000000–002699)	Fitting, Hyd, Str, Jm10/Om10	1
28	49933	(000000–002699)	Fitting, Hyd, Tee, Jm08/Jm08/Om08, Br	1
29	69173	(000000–002699)	Fitting, Hyd, E90, Jm08/Om08, L	1
30	76316	(000000–002699)	Fitting, Hyd, Tee, Jm06/Jm06/Om06, Run	1
31	395973	(001272–026999)	Fitting, Hyd, Str, Om04/Qm04	1
32	56820	(000000–001337)	Fitting, Hyd, E90, Jm06/Om06	1
33	71727	(001338–026999)	Fitting, Hyd, E90, Jm06/Om06, L	1

Fig. 85 – Hydraulic Valve Group (002700–)

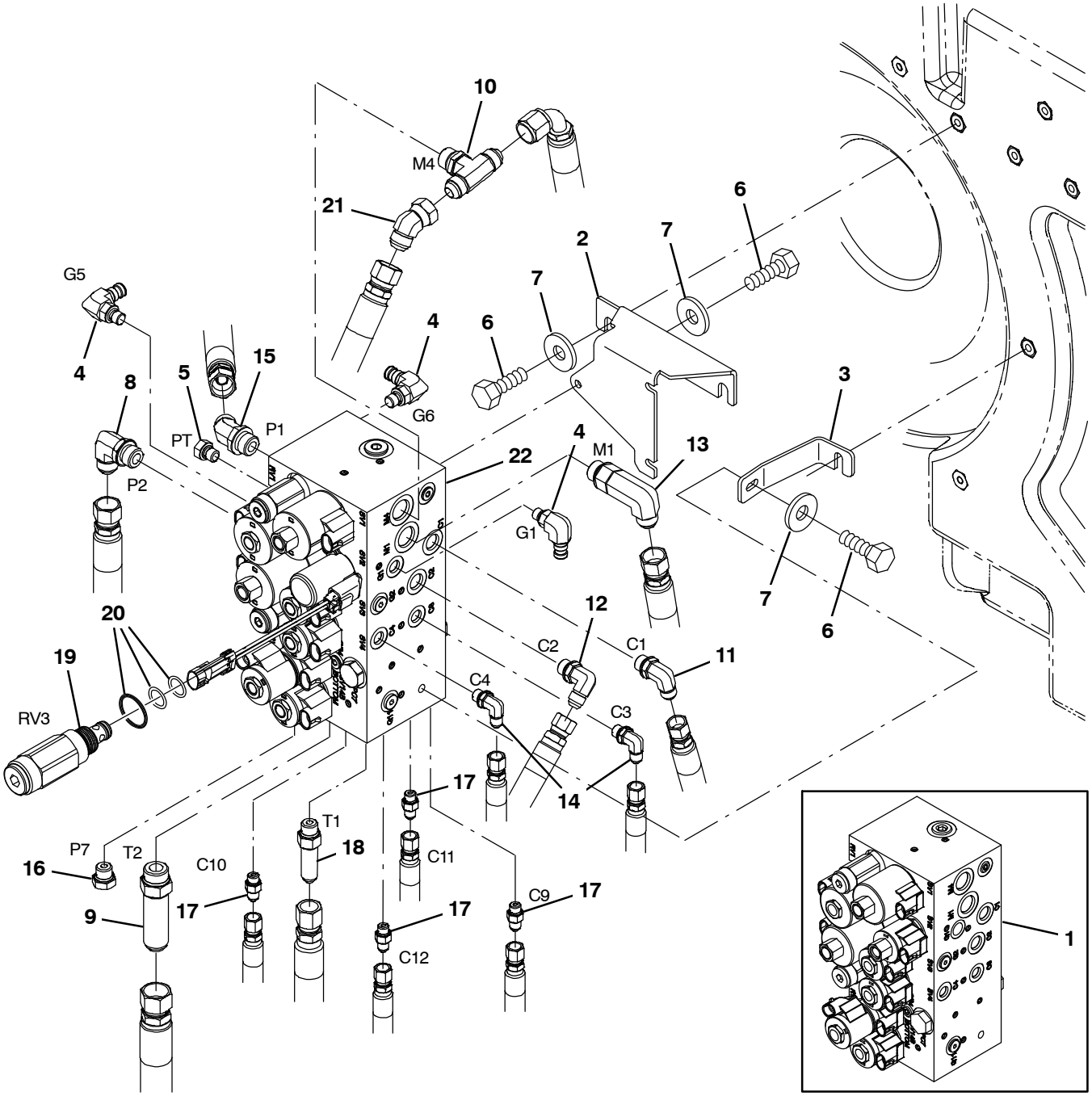

354816

Fig. 85 – Hydraulic Valve Group (002700–)

Ref.	Part No.	Serial Number	Description	Qty.
1	1038566	(002700–006286)	Valve, Hyd, Solenoid, 12vdc (See Breakdowns)	1
2	1039789	(002700–)	Bracket, Mtg, Valve [Combined]	1
3	1040117	(002700–)	Bracket, Mtg, Valve, Lower	1
4	395974	(002700–)	Fitting, Hyd, E90, Om04/Qm04	3
5	33812	(002700–)	Fitting, Hyd, Plug, Om04	1
6	09740	(002700–)	Screw, Hex, M8 X 1.25 X 20, Ss	8
7	1017218	(002700–)	Washer, Flat, 0.32b 1.00d .12, Ss	8
8	69173	(002700–)	Fitting, Hyd, E90, Jm08/Om08, Long	1
9	1040876	(002700–)	Fitting, Hyd, Str, Jm10/Om10, Long	1
10	49933	(002700–)	Fitting, Hyd, Tee, Jm08/Jm08/Om08, Br	1
11	56820	(002700–)	Fitting, Hyd, E90, Jm06/Om06	1
12	71727	(002700–)	Fitting, Hyd, E90, Jm06/Om06, Long	1
13	69173	(002700–)	Fitting, Hyd, E90, Jm08/Om08, Long	1
14	77097	(002700–)	Fitting, Hyd, E90, Jm04/Om04	2
15	42226	(002700–)	Fitting, Hyd, E45, Jm08/Om08	1
16	46482	(002700–)	Fitting, Hyd, Plug, Om06	1
17	55586	(002700–)	Fitting, Hyd, Str, Jm04/Om04	4
18	59577	(002700–)	Fitting, Hyd, Str, Jm06/Om06, Long	1
19	1044367	(002700–)	Valve, Relief, 0600Psi	1
20	373647	(002700–)	Seal Kit, Cartridge	1
21	07797	(006000–)	Fitting, Hyd, E45, Jf08/Jm08	1
22	1072995	(006287–)	Valve, Cntrl, Hyd, Solenoid, 12vdc 10gpm (See Breakdowns)	1

Fig. 86 – GM Electrical Schematic (000000–001999)

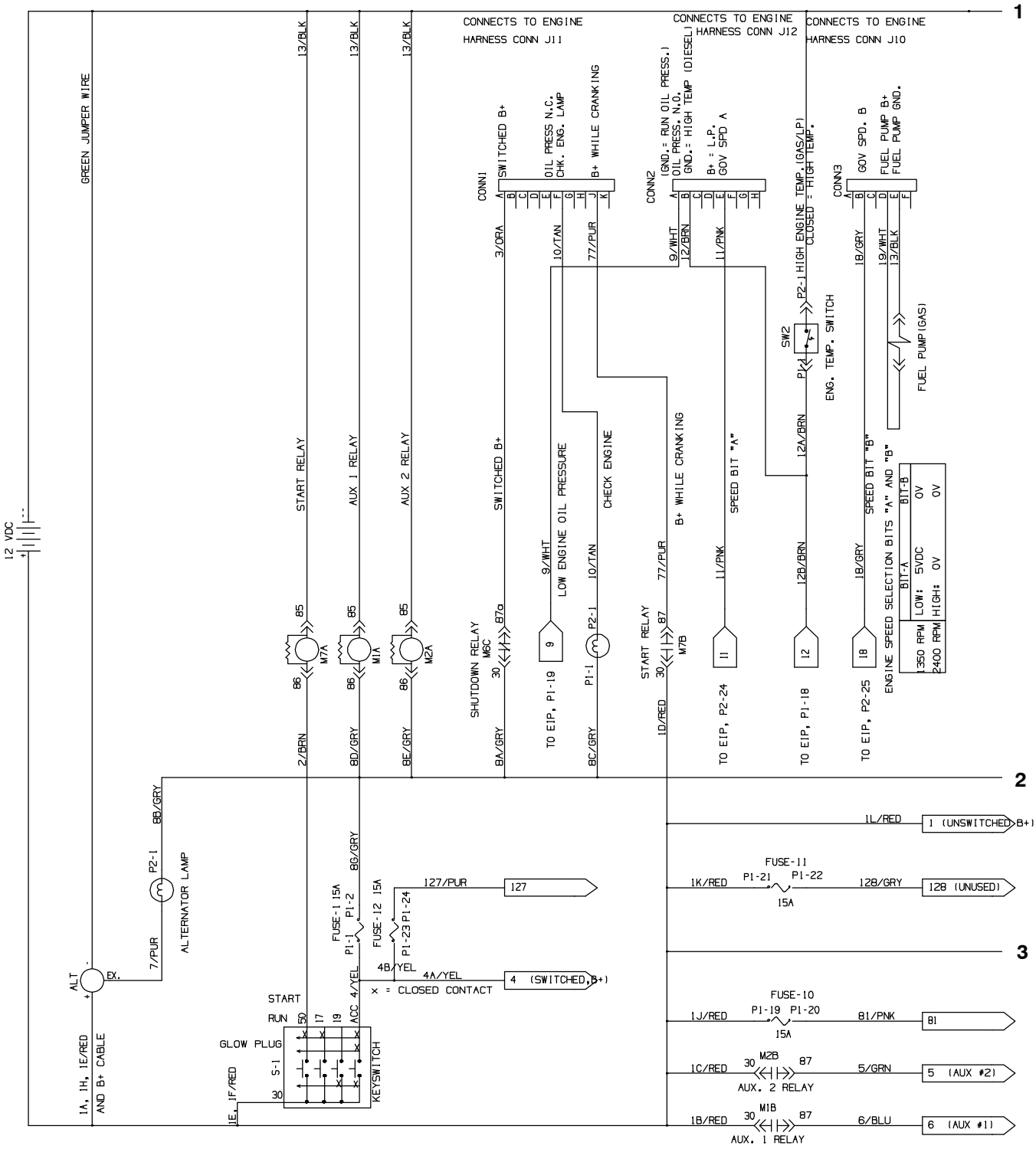

1018547 – 354458

Fig. 86 – GM Electrical Schematic (000000–001999)

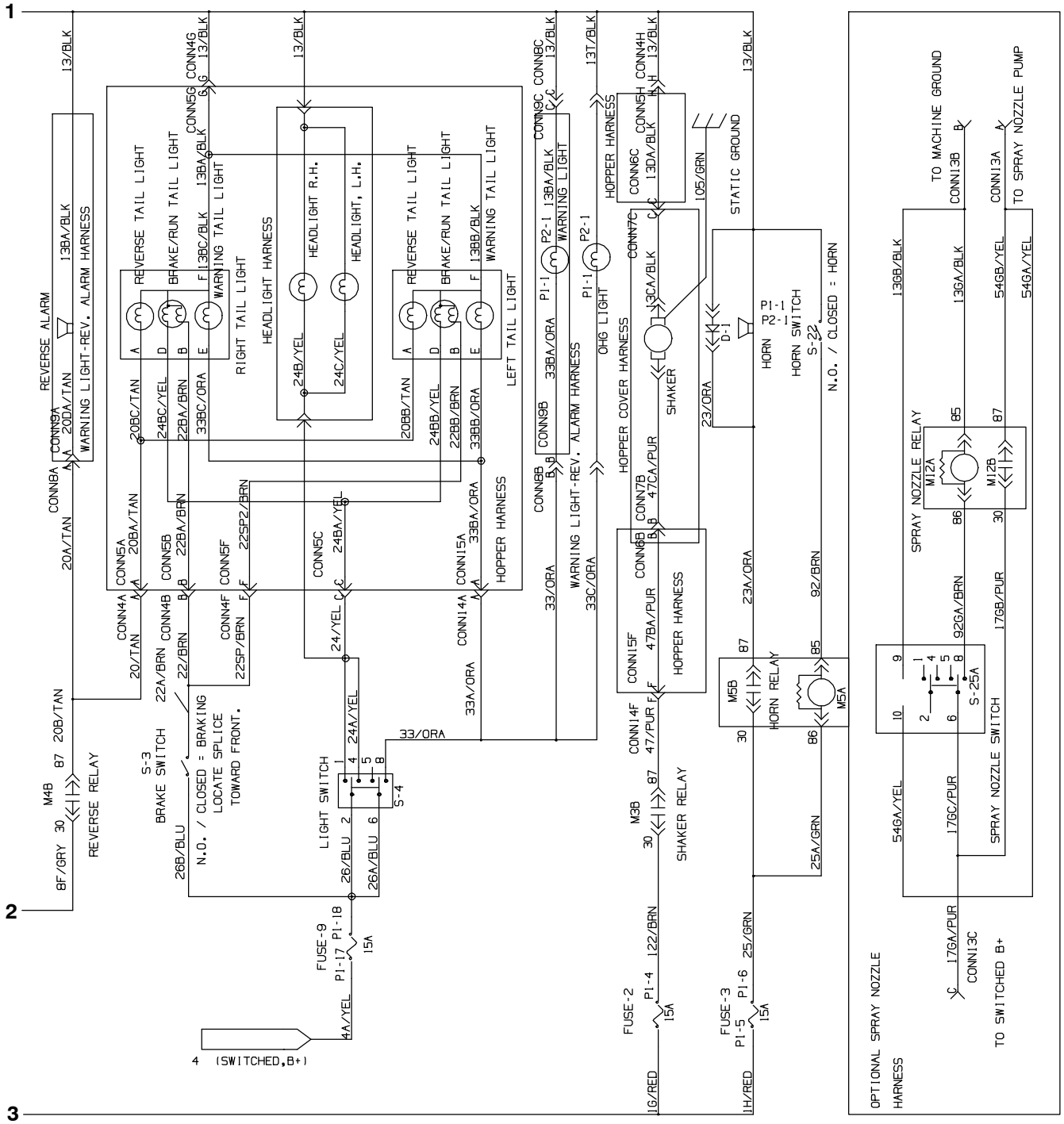

1018547

Fig. 86 – GM Electrical Schematic (000000–001999)

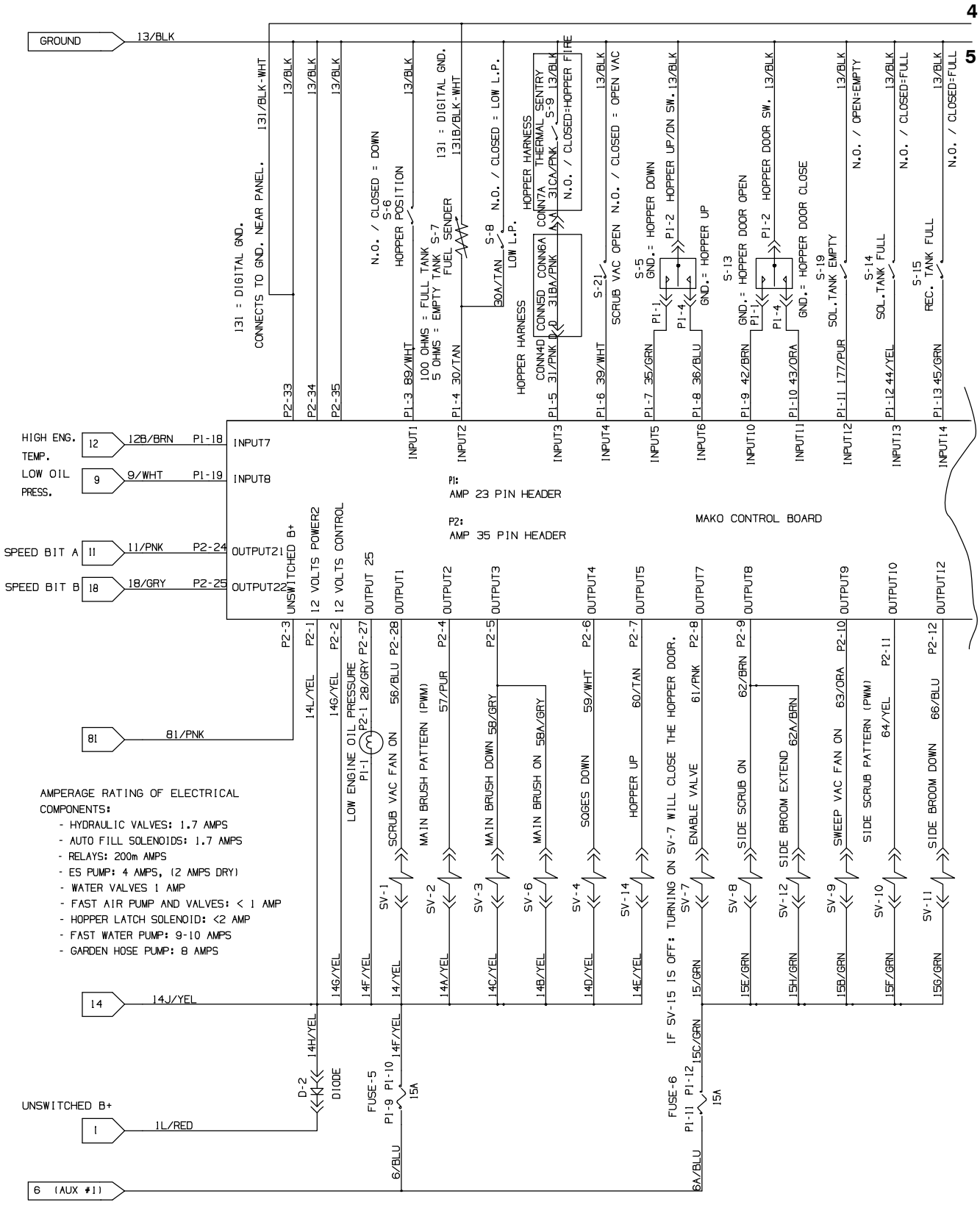

1018547

Fig. 86 – GM Electrical Schematic (000000–001999)

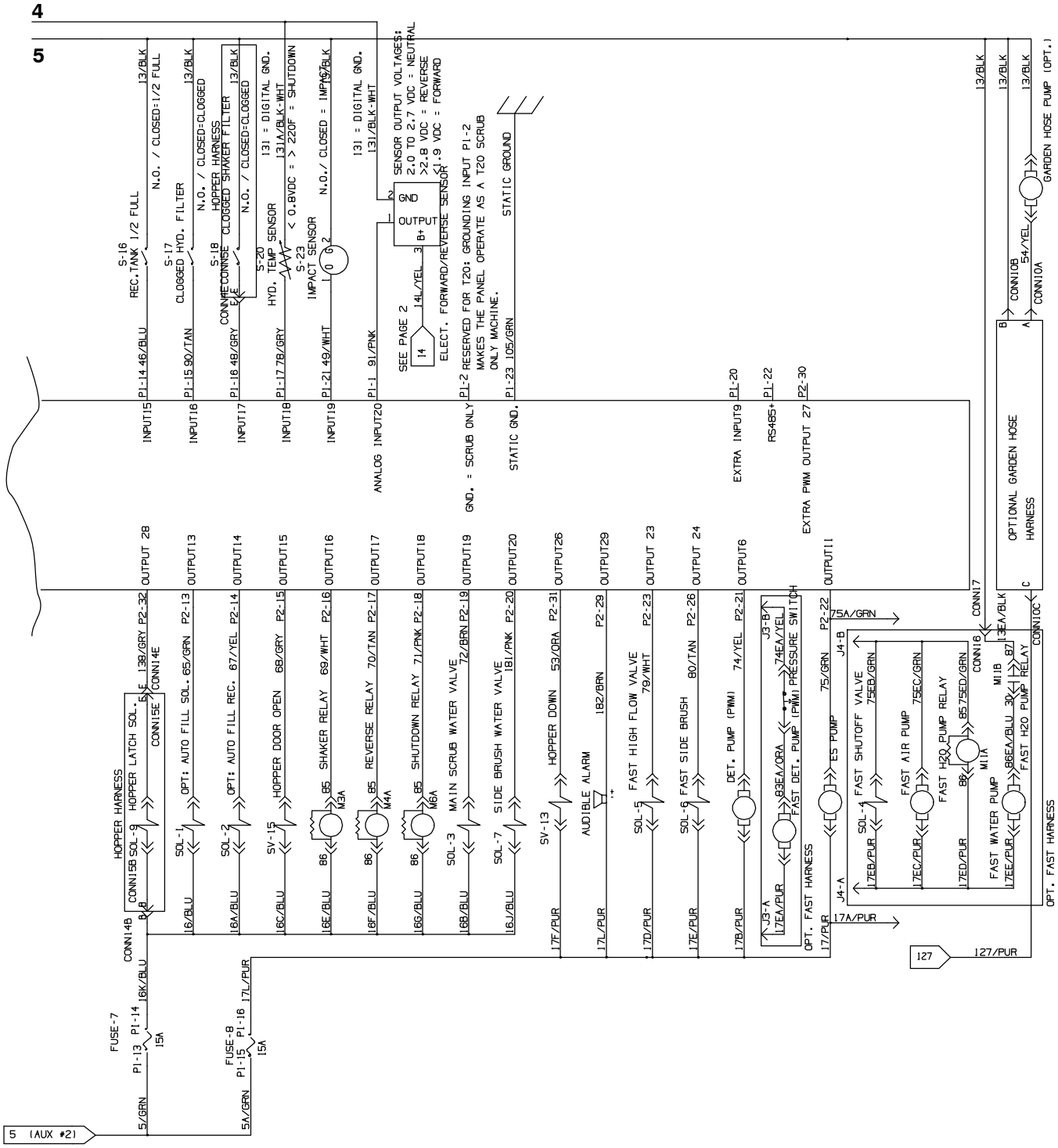

1018547

Fig. 87 – GM Electrical Schematic (002000–002532)

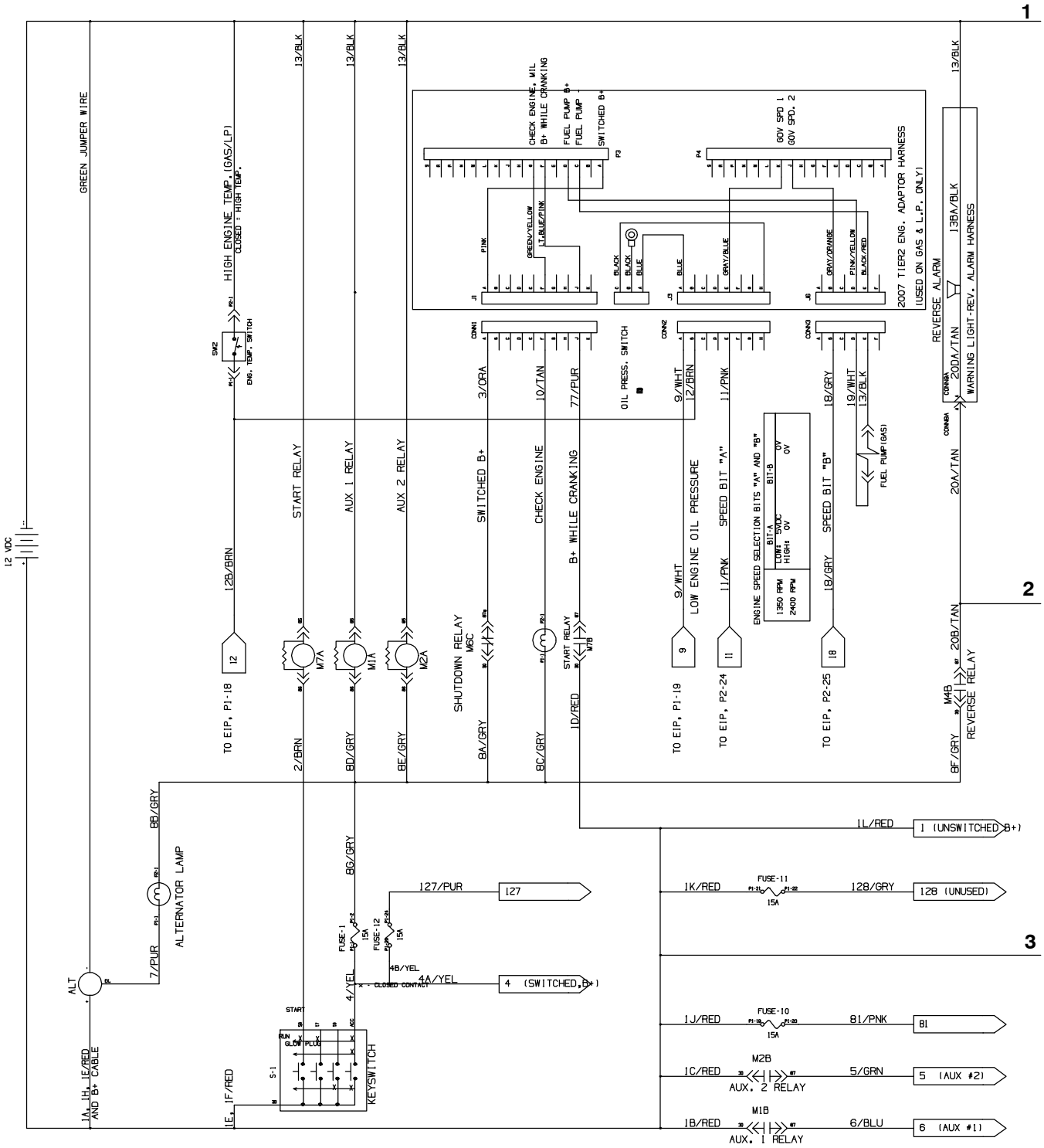

1018547 – 354458

Fig. 87 – GM Electrical Schematic (002000–002532)

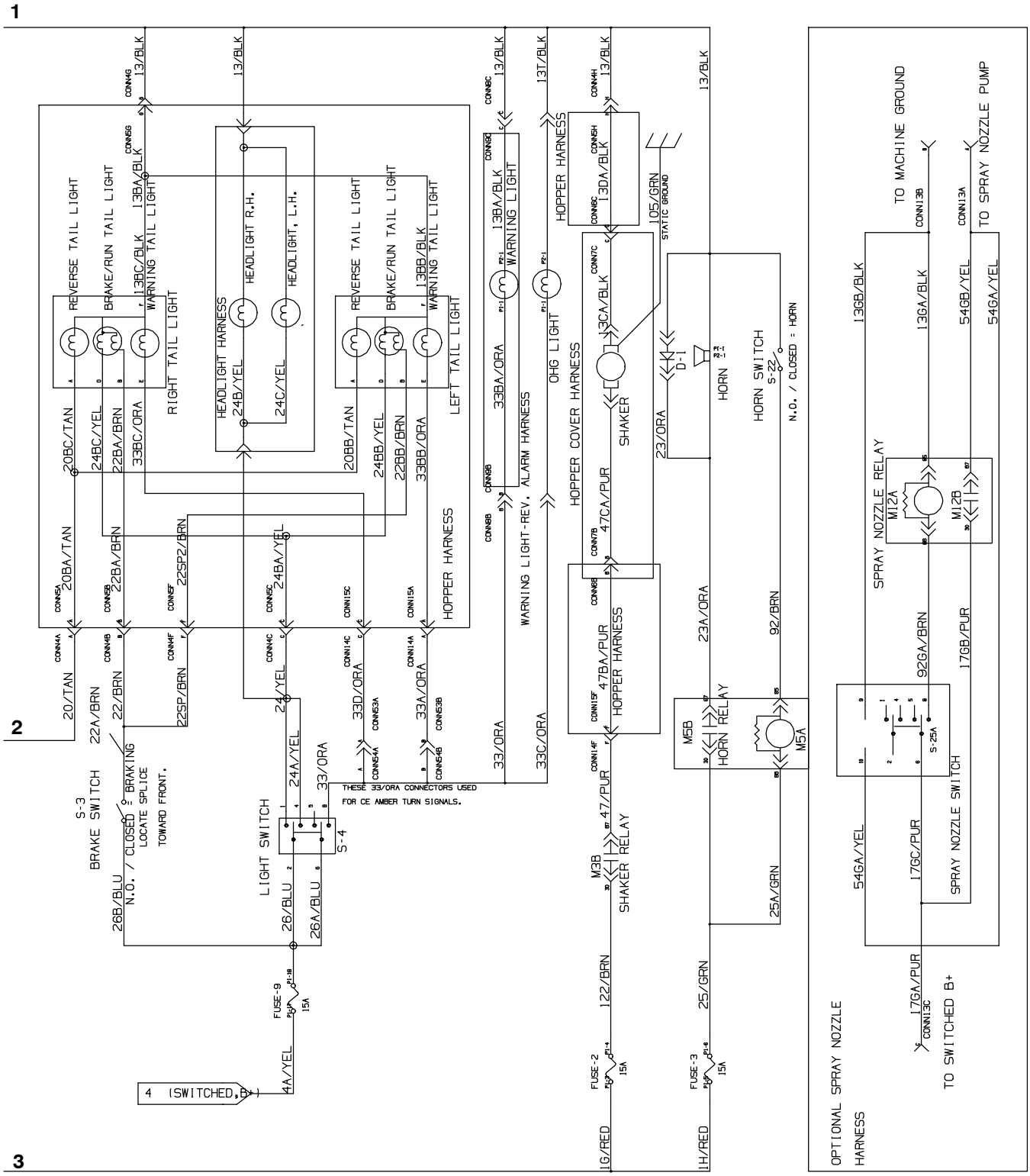

1018547

Fig. 87 – GM Electrical Schematic (002000–002532)

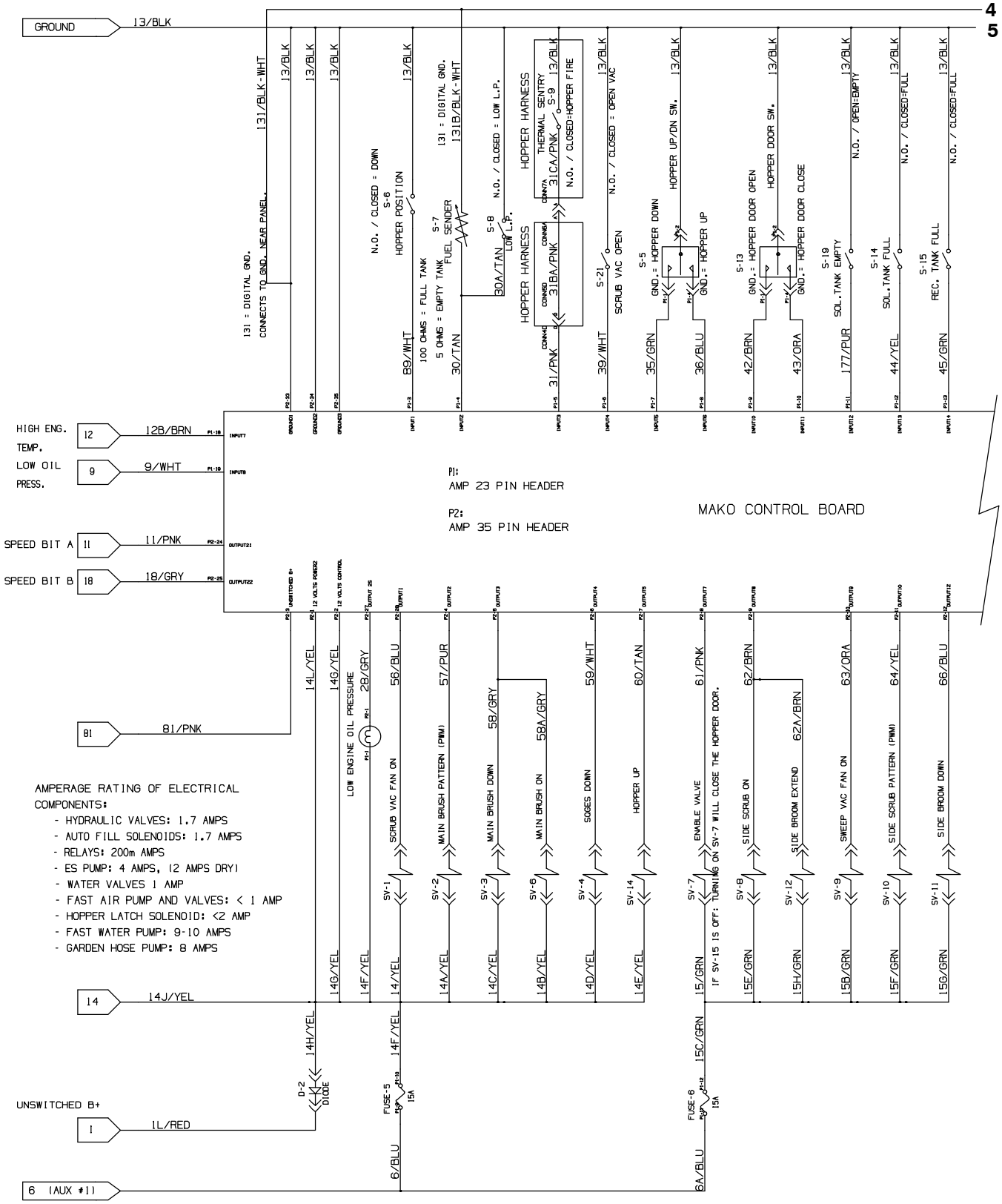

1018547

Fig. 87 – GM Electrical Schematic (002000–002532)

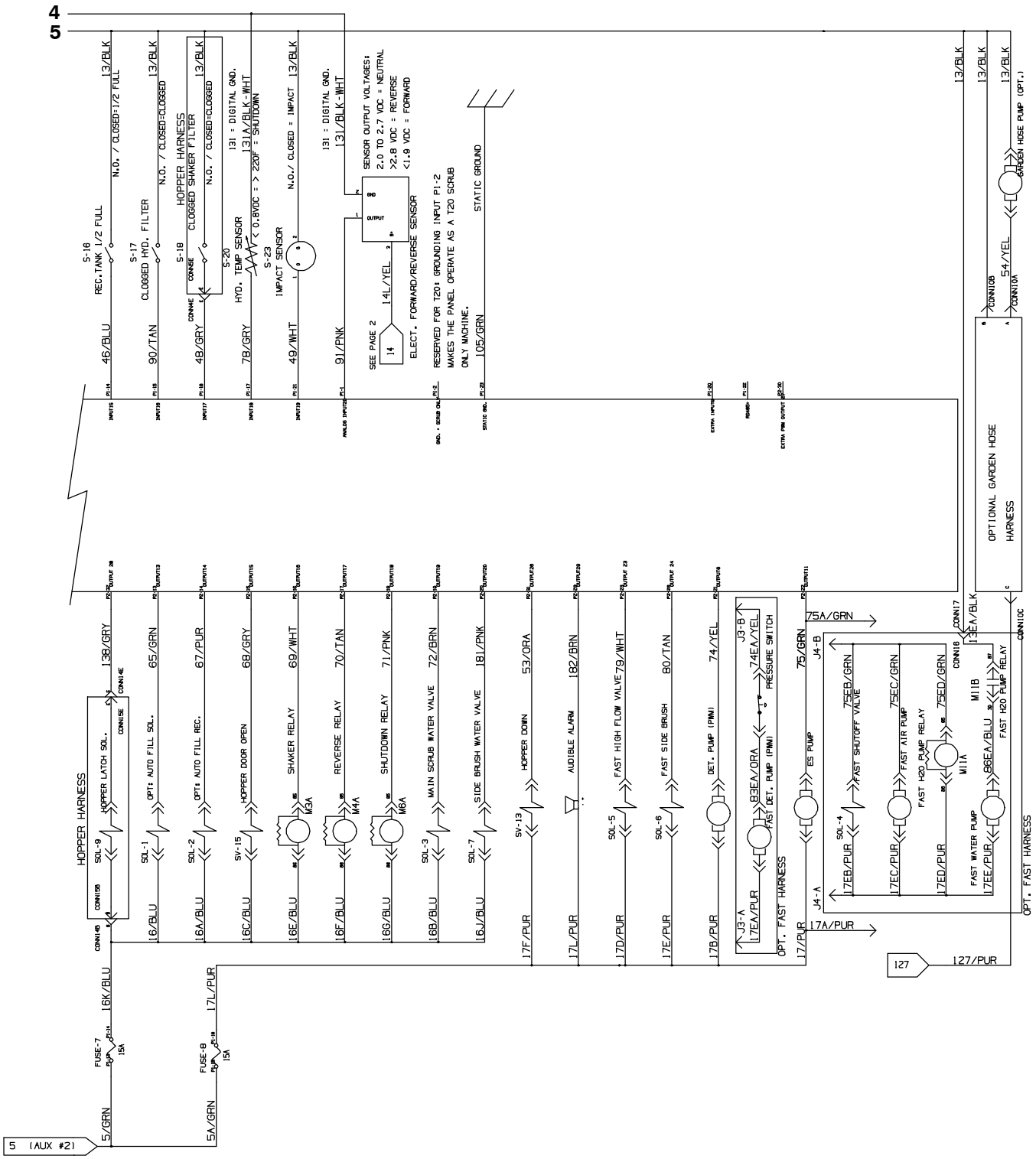

1018547

Fig. 88 – GM Electrical Schematic (002533–005999)

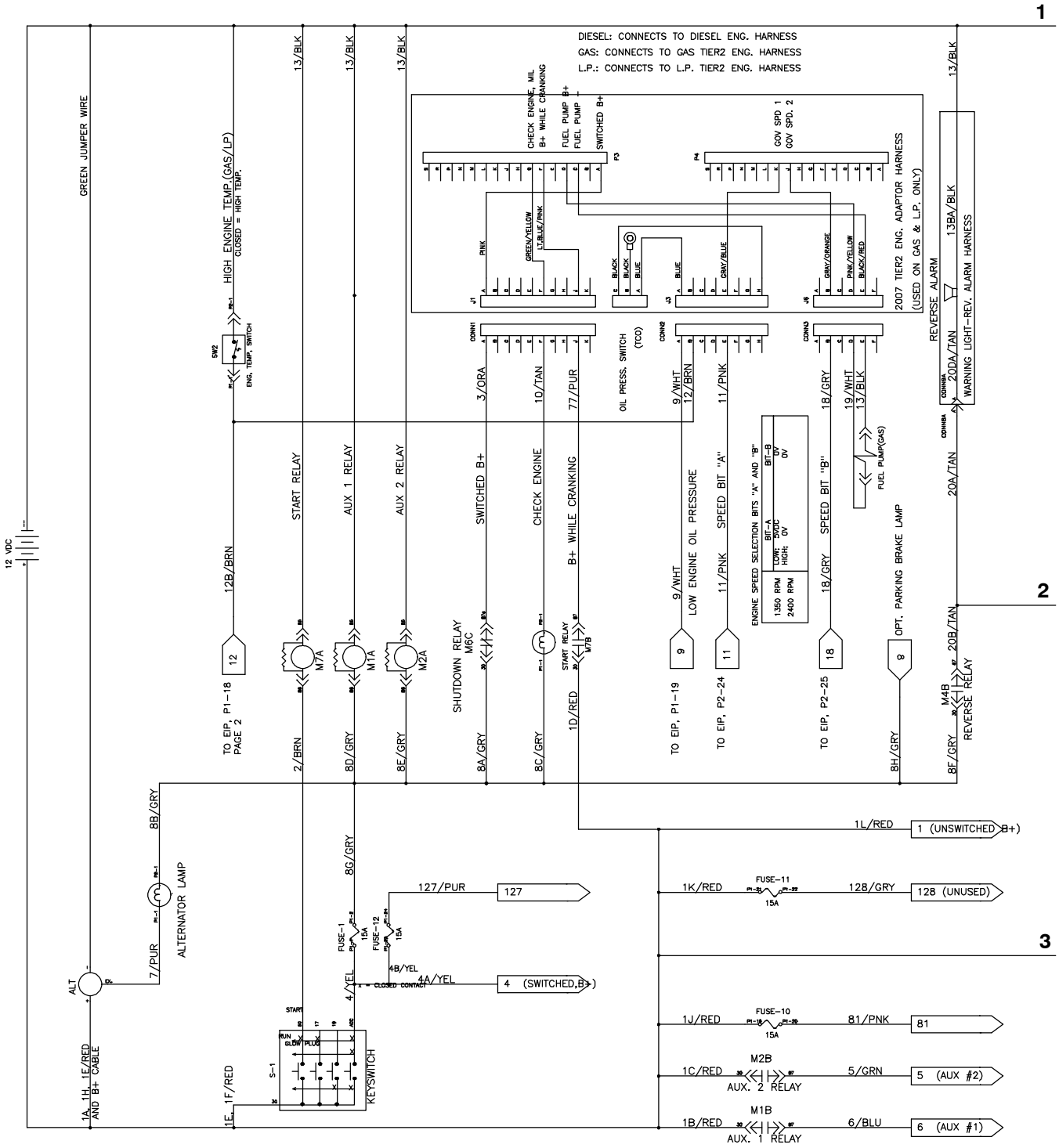

1018547 – 354458

Fig. 88 – GM Electrical Schematic (002533–005999)

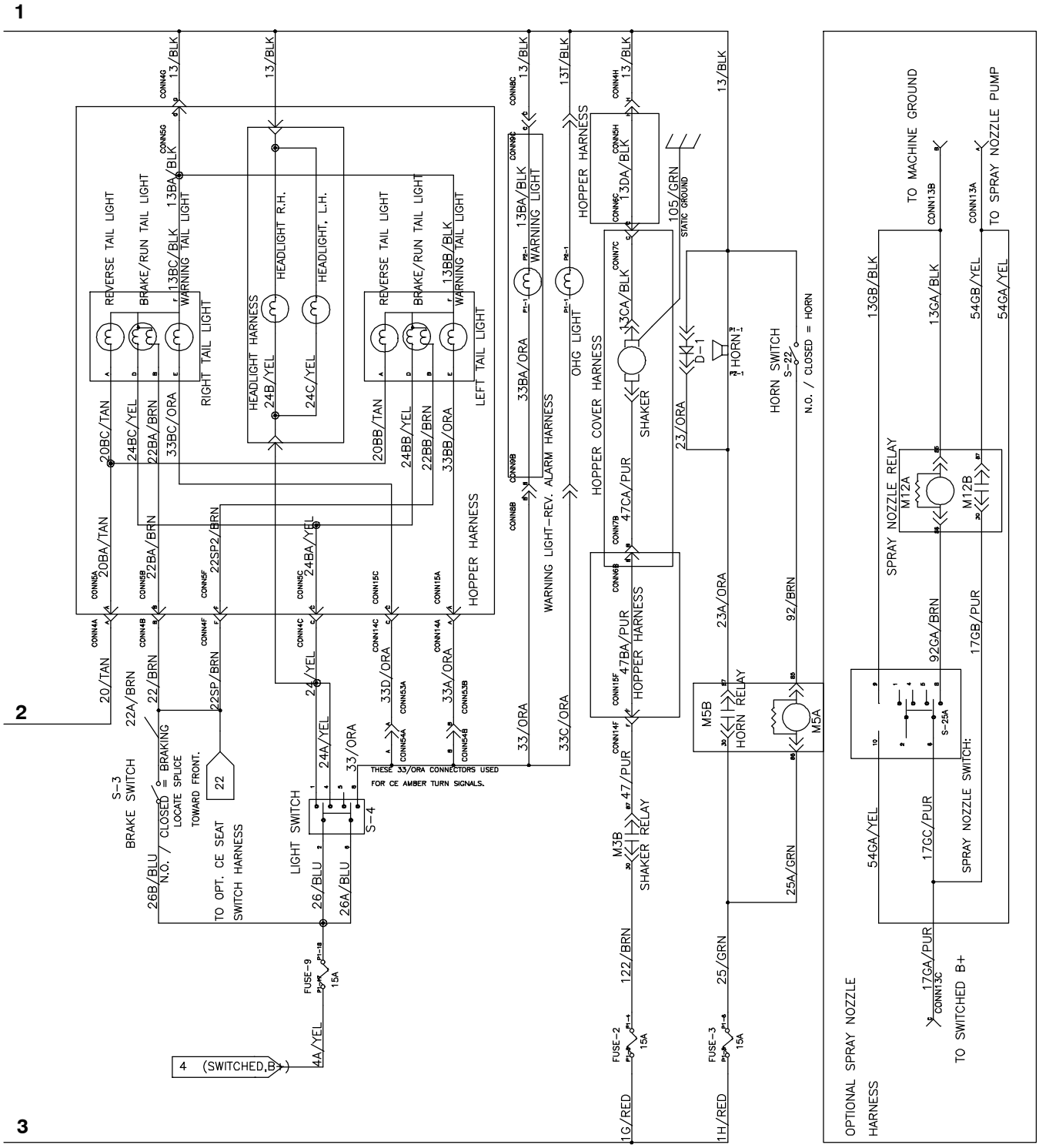

1018547 – 354458

Fig. 88 – GM Electrical Schematic (002533–005999)

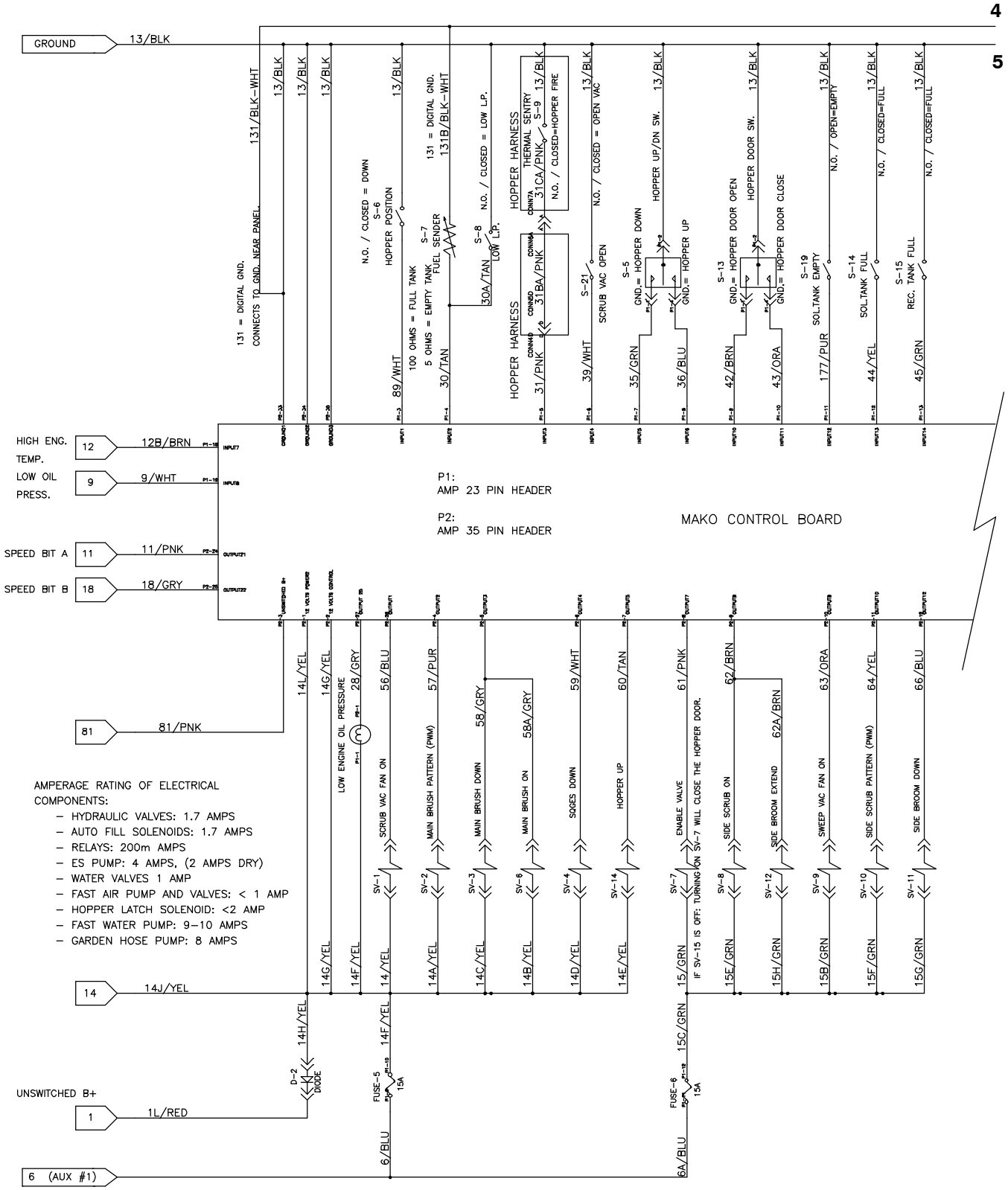

1018547 – 354458

Fig. 88 – GM Electrical Schematic (002533–005999)

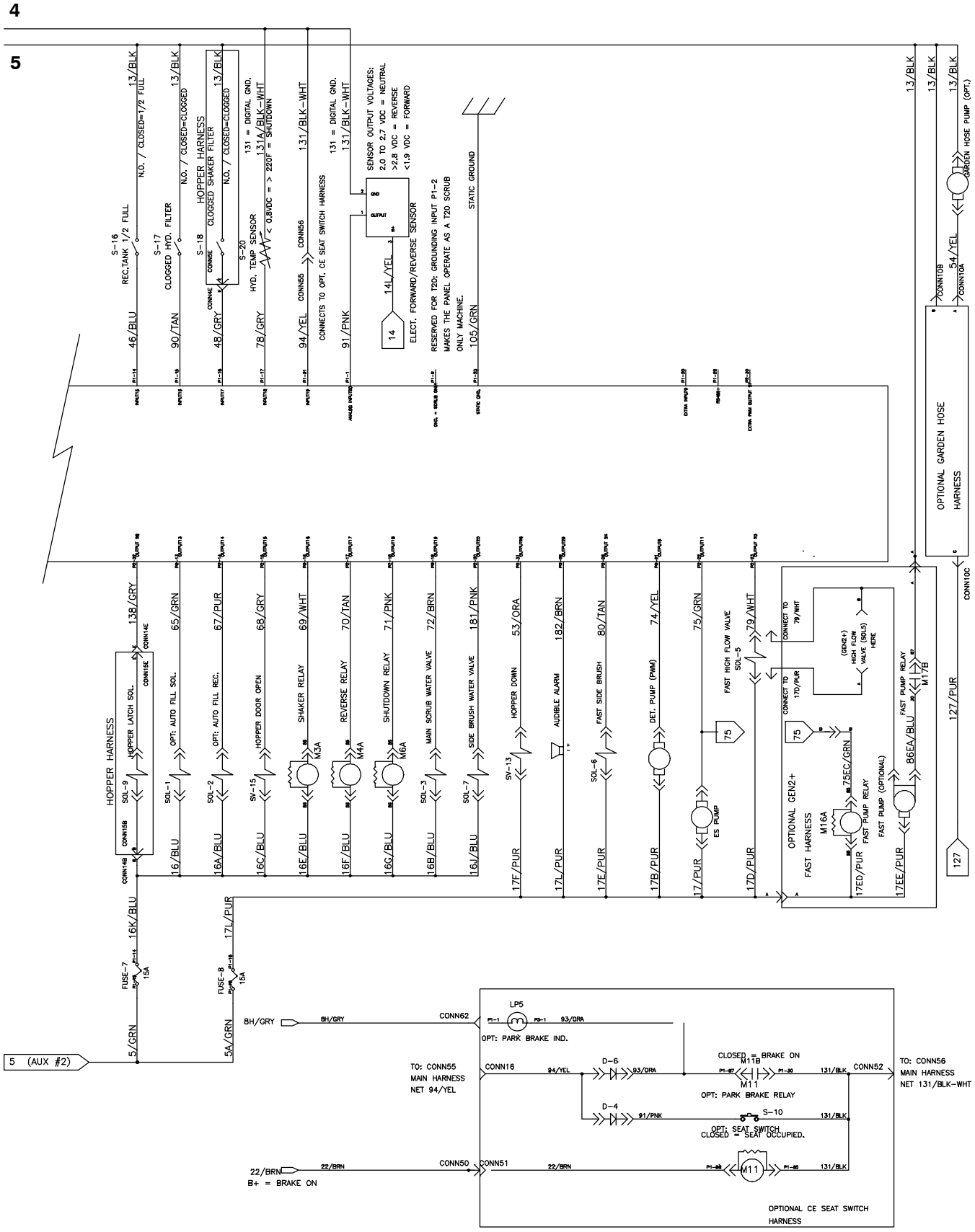

1018547 – 354458

Fig. 88 – GM Electrical Schematic (002533–005999)

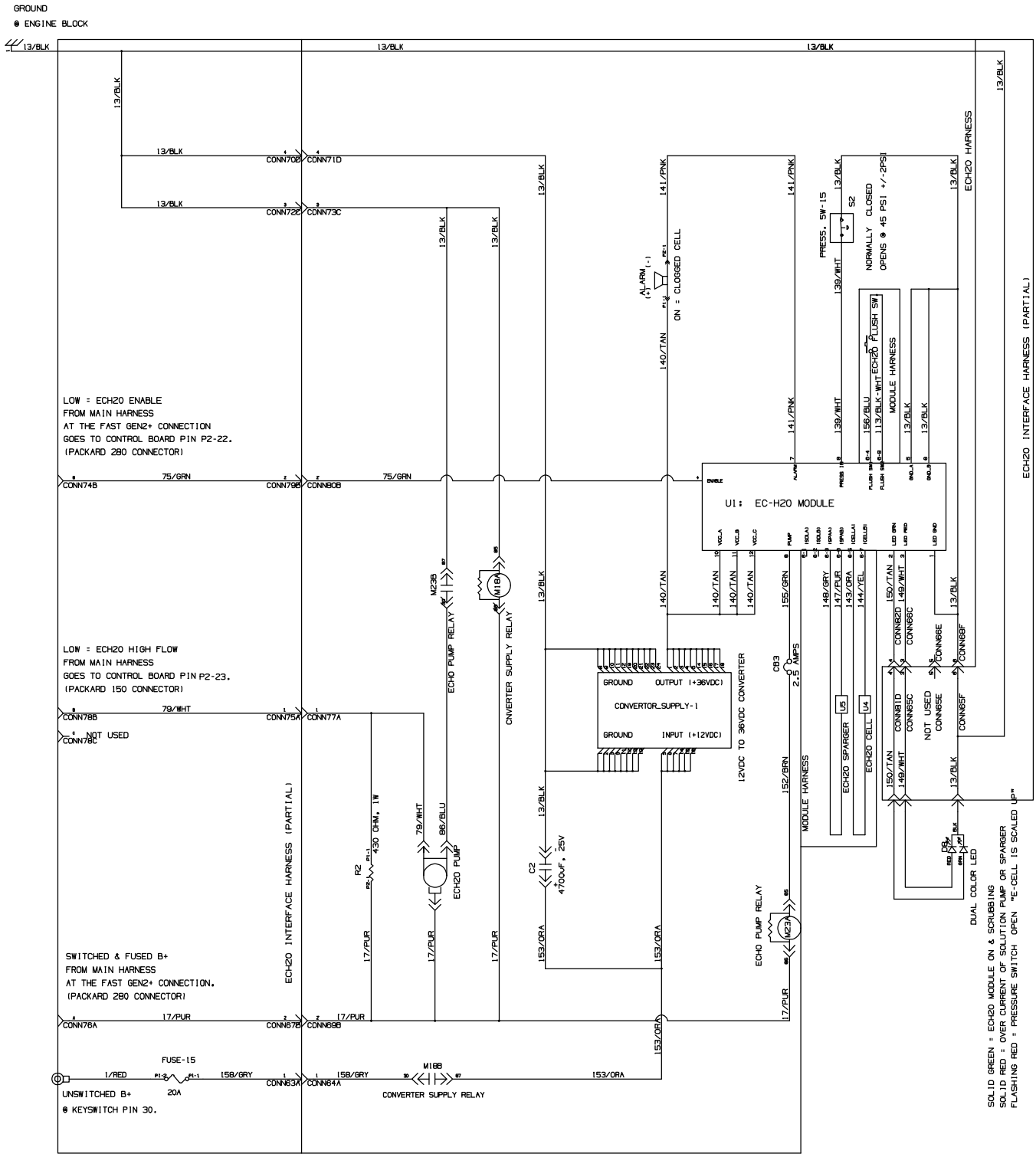

1018547 – 354458

Fig. 89 – GM Electrical Schematic (003479–005999)

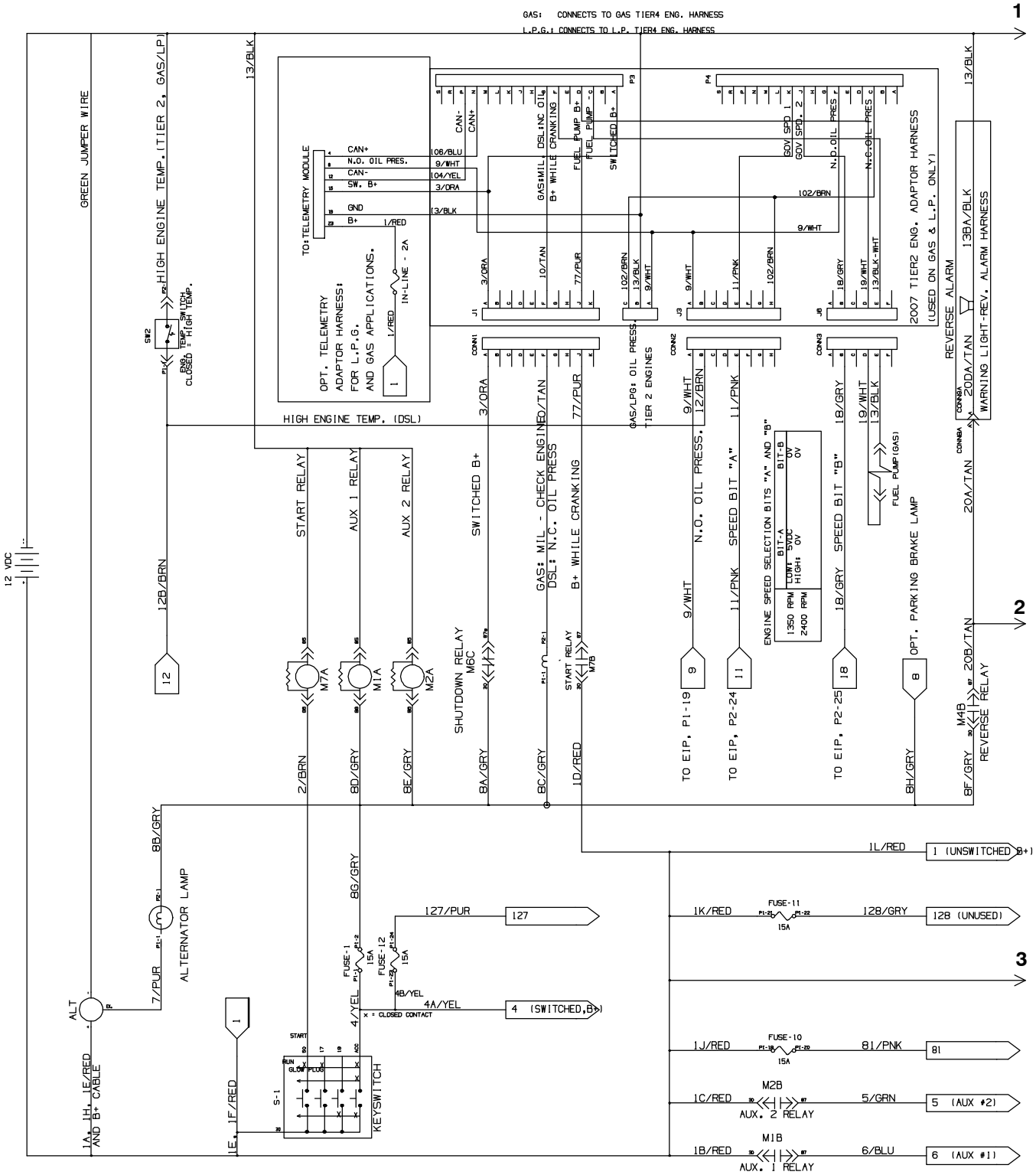

1018547 – 354458

Fig. 89 – GM Electrical Schematic (003479–005999)

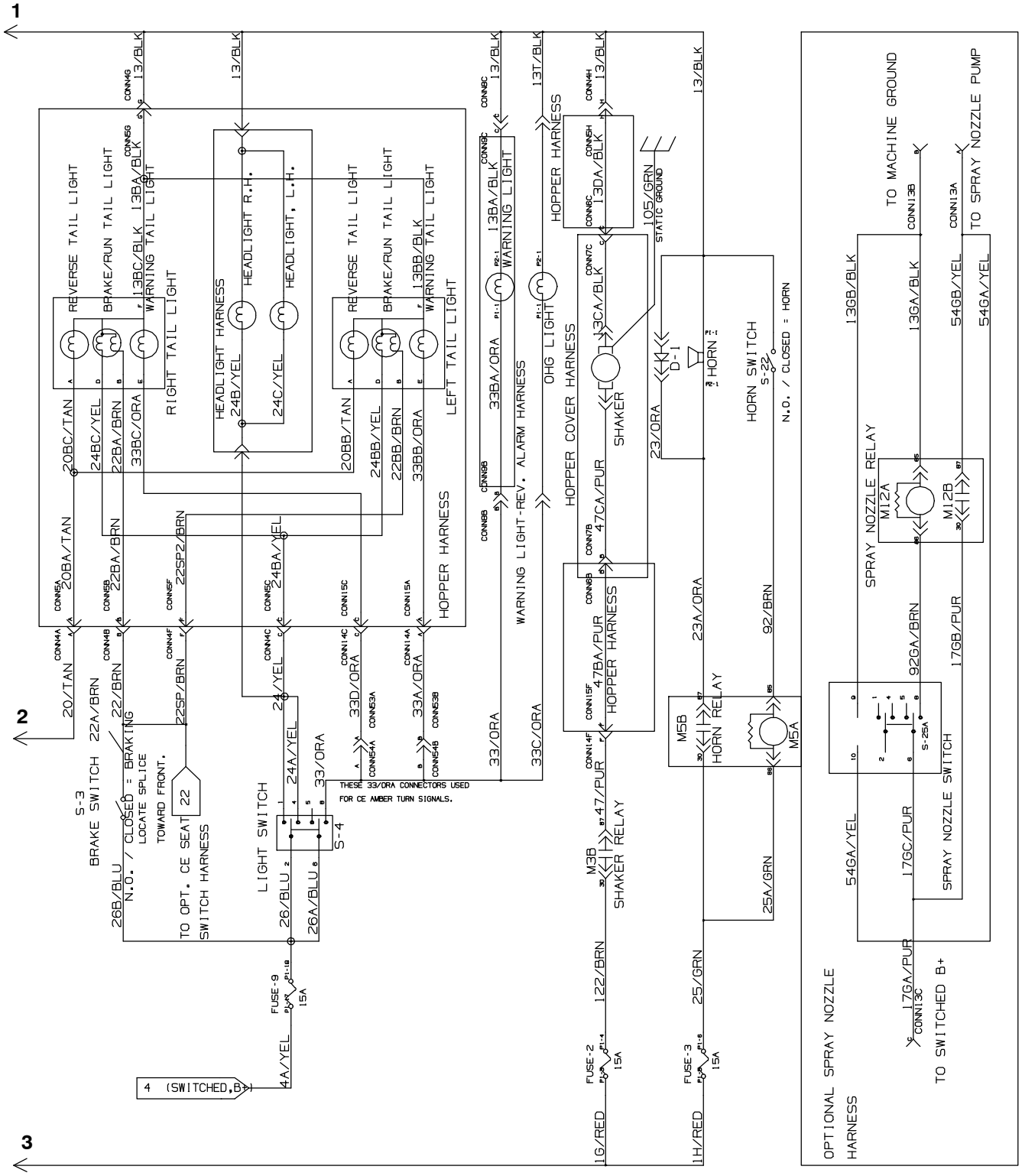

1018547 – 354458

Fig. 89 – GM Electrical Schematic (003479–005999)

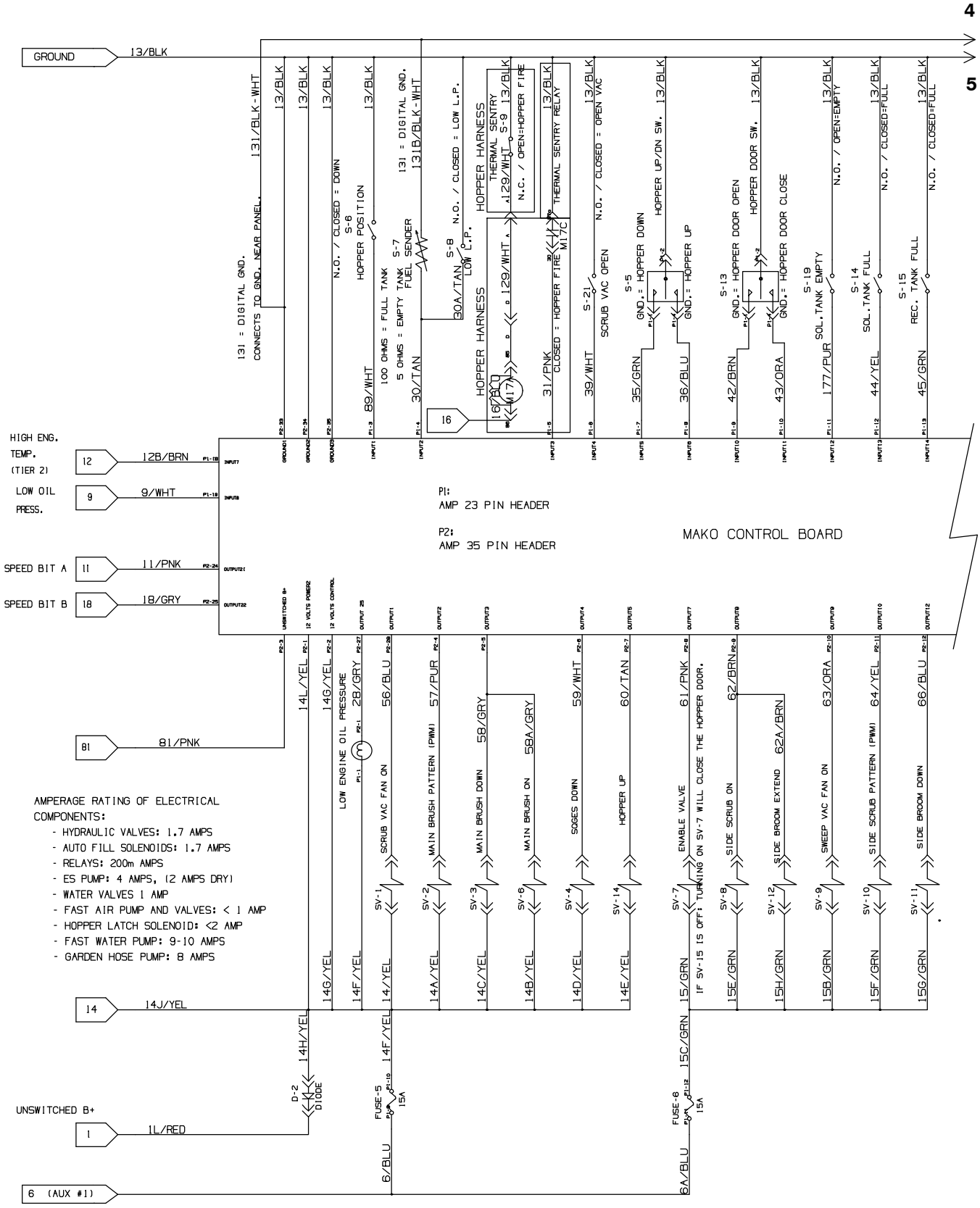

1018547 – 354458

Fig. 89 – GM Electrical Schematic (003479–005999)

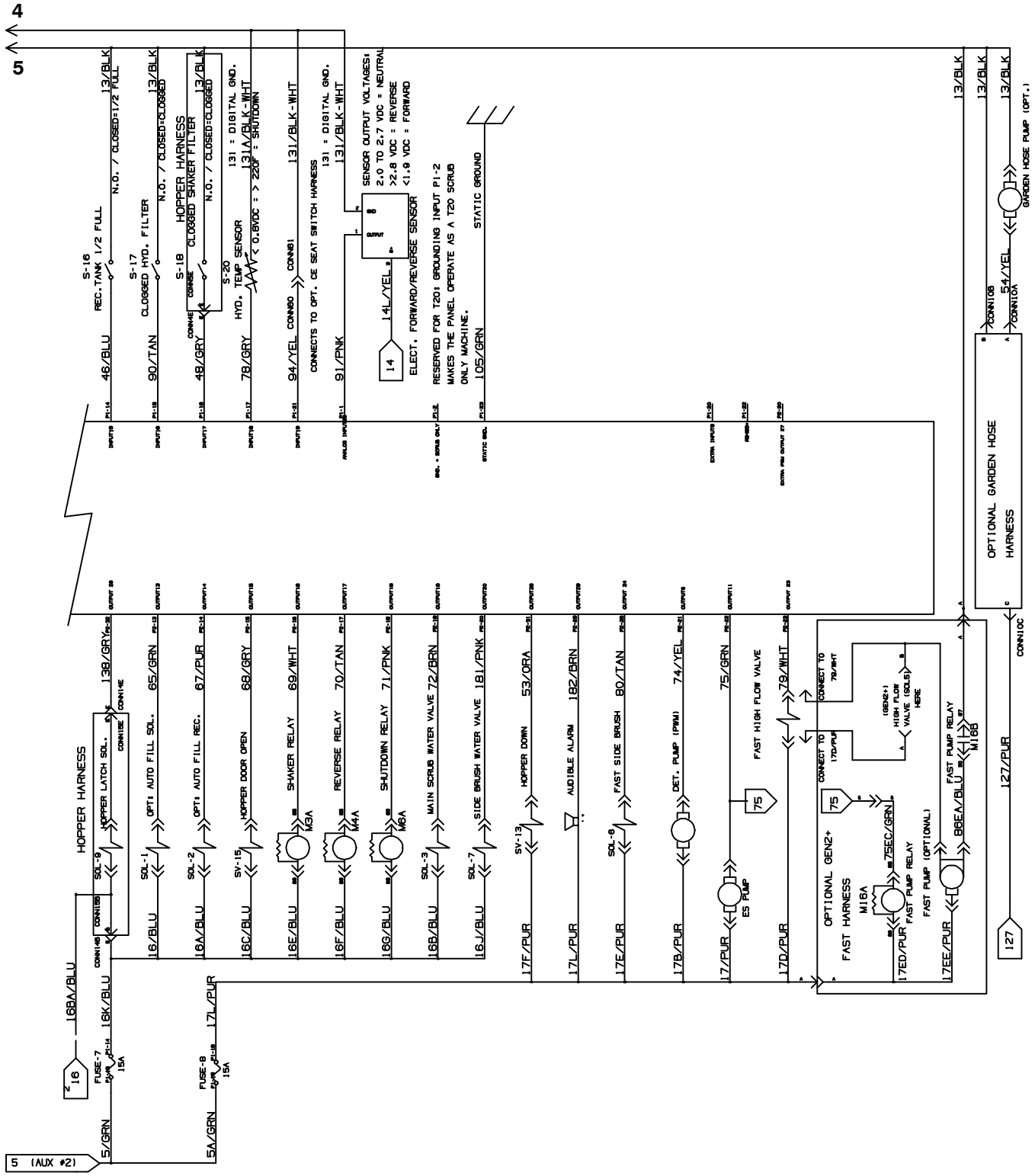

1018547 – 354458

Fig. 90 – GM Electrical Schematic, Gas/LPG Engine Harness (000000–001999)

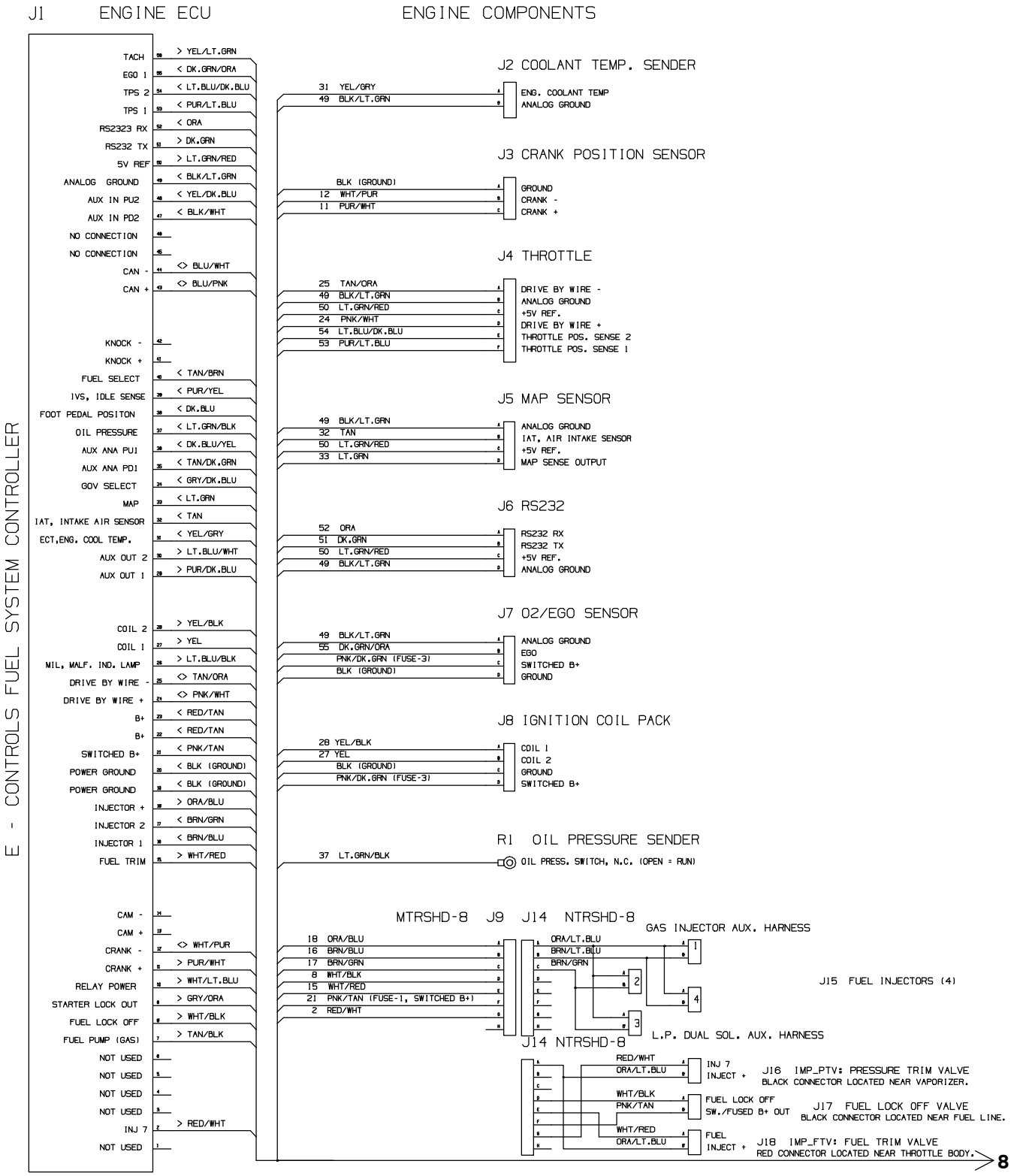

Fig. 90 – GM Electrical Schematic, Gas/LPG Engine Harness (000000–001999)

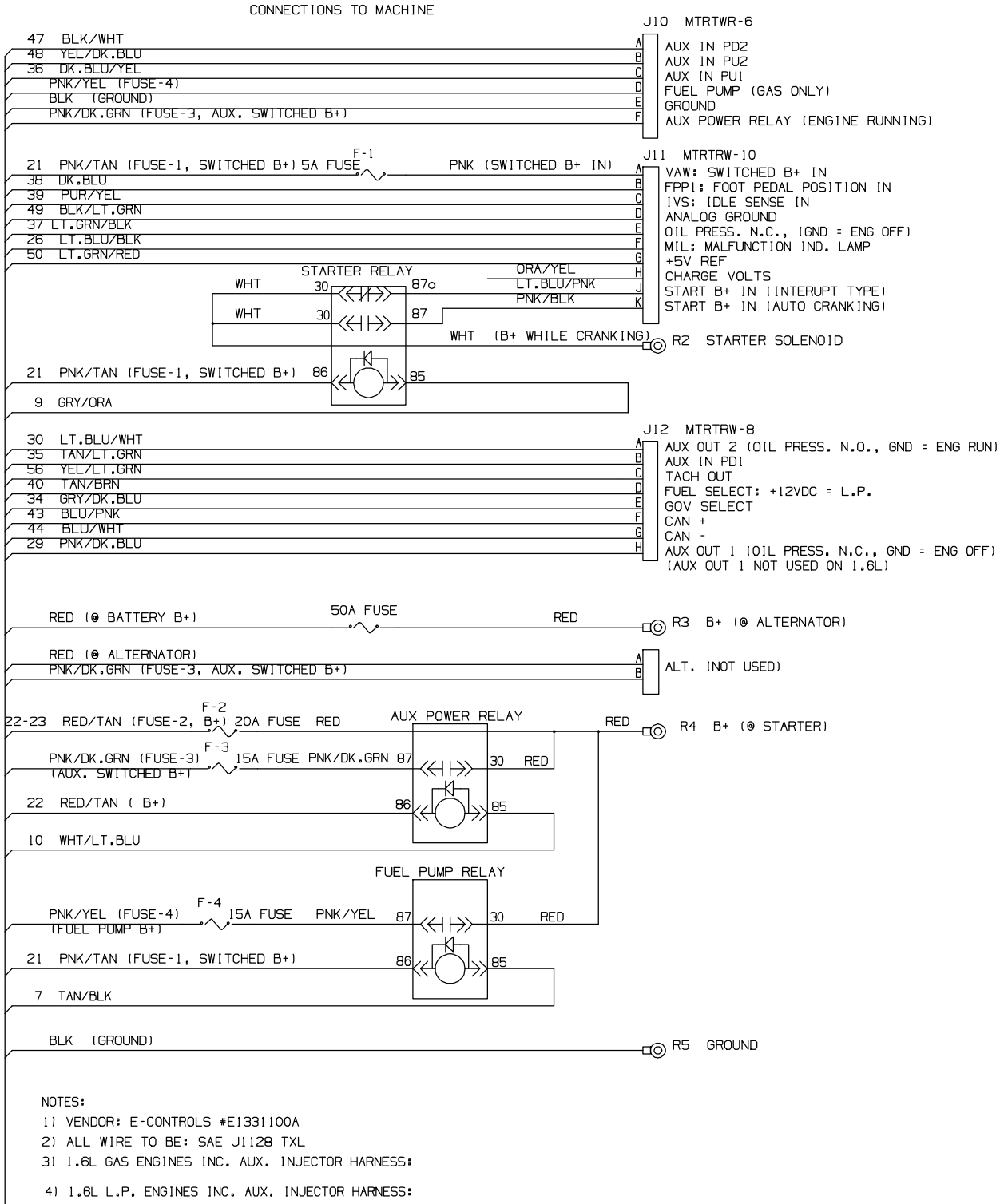

1018547

Fig. 91 – GM Electrical Schematic, Gas Engine Harness (002000–003122)

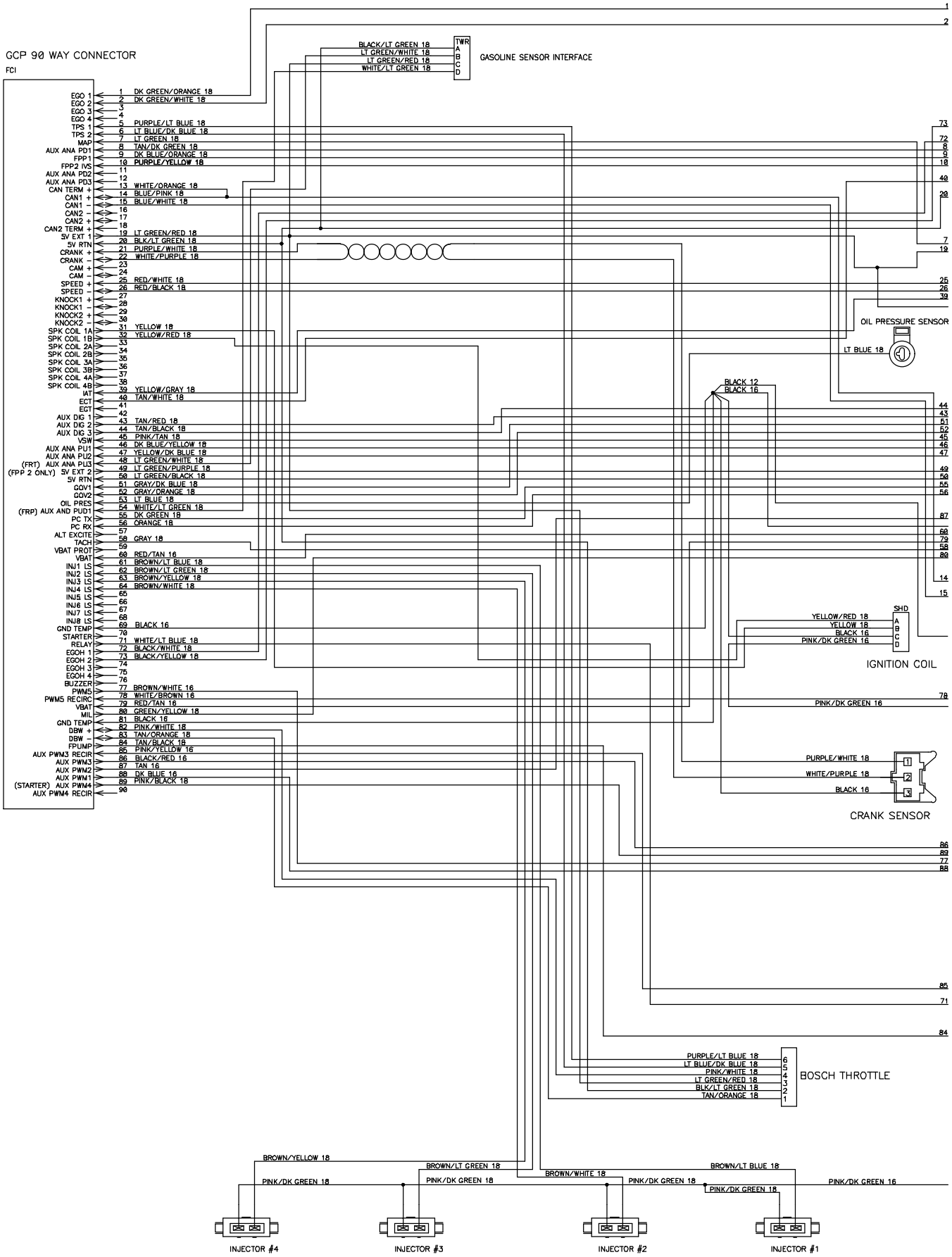

384997 – 354495

Fig. 91 – GM Electrical Schematic, Gas Engine Harness (002000–003122)

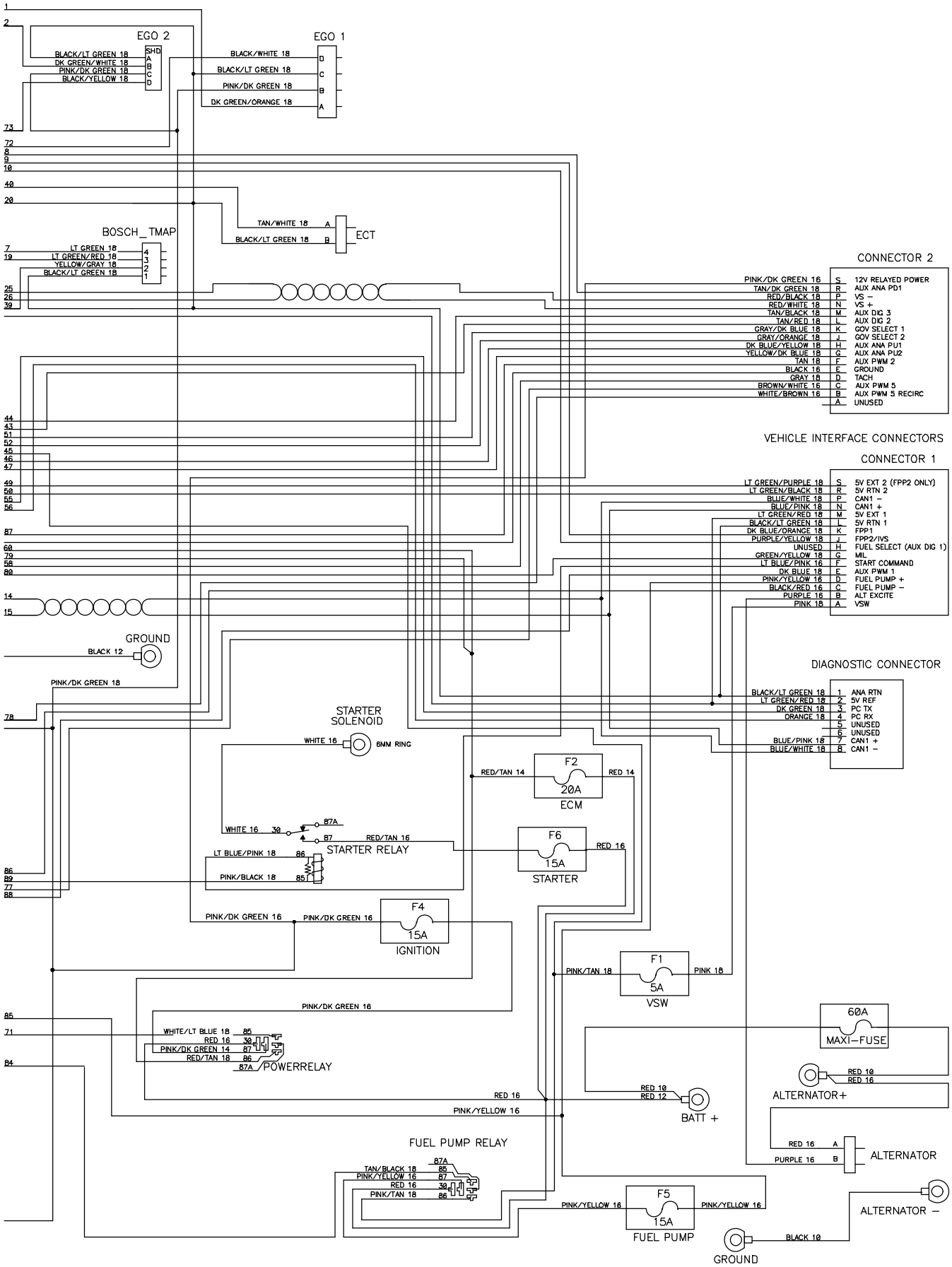

Fig. 92 – GM Electrical Schematic, Gas Engine Harness (003123–005999)

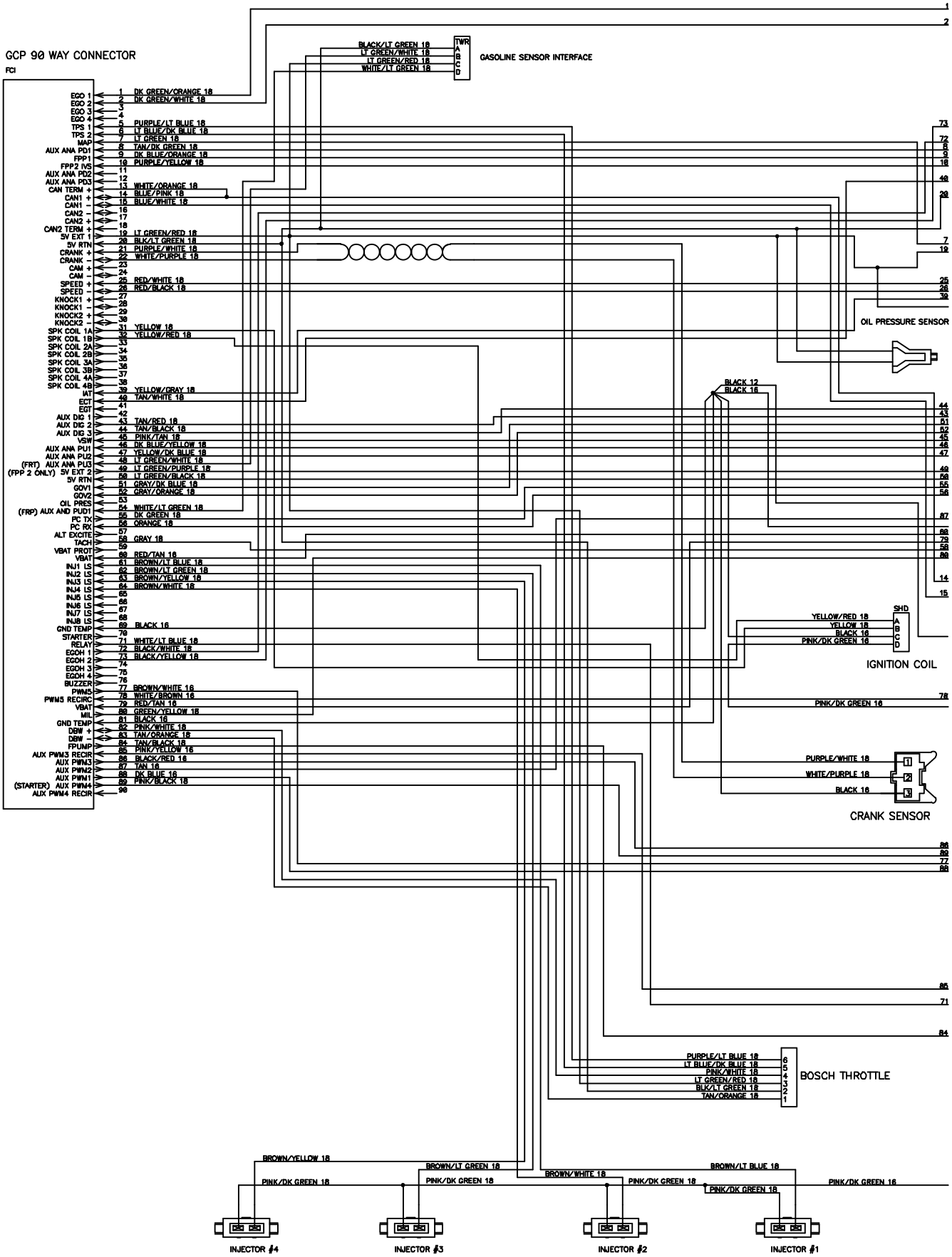

384997 – 354495

Fig. 92 – GM Electrical Schematic, Gas Engine Harness (003123–005999)

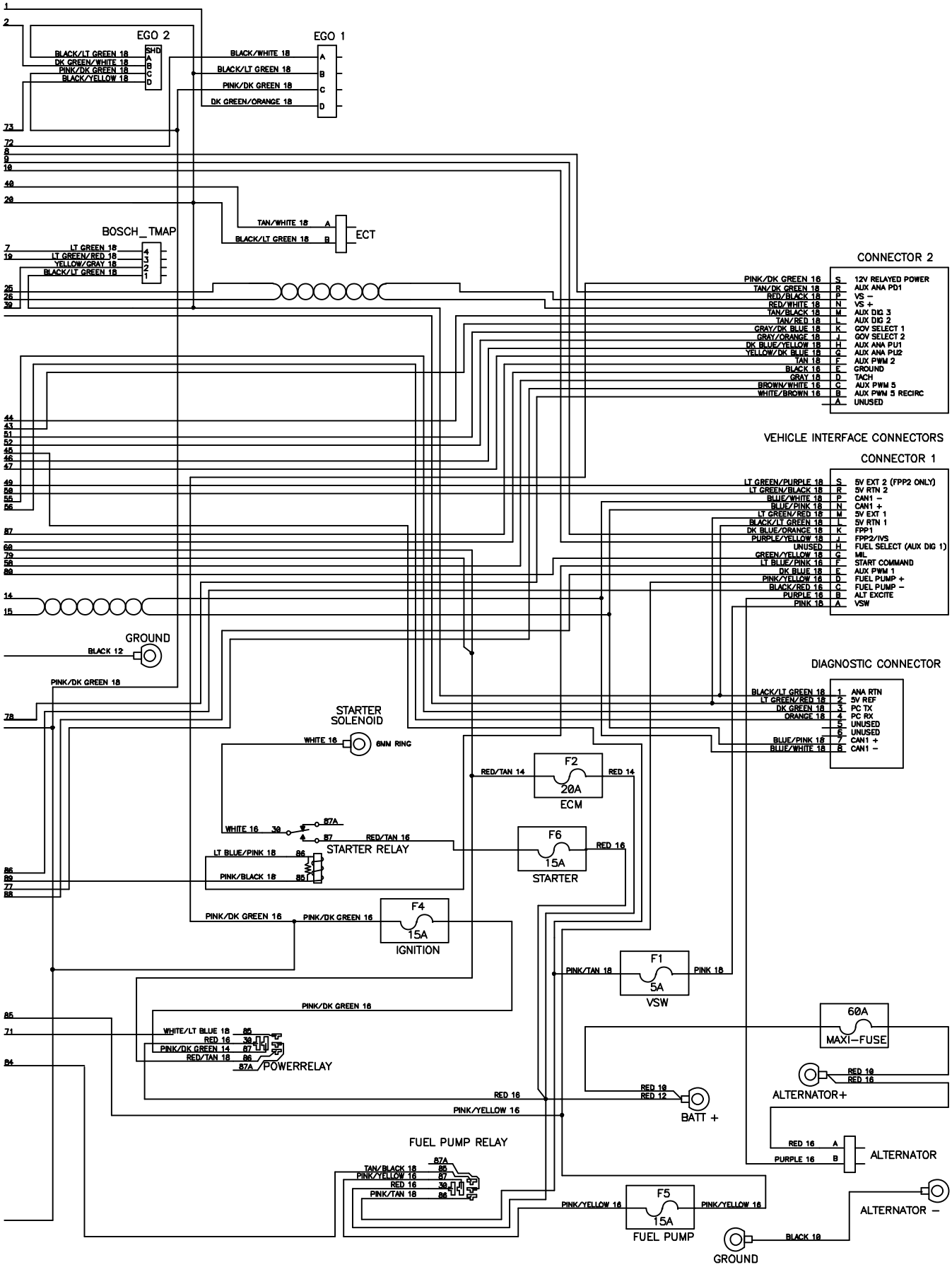

Fig. 93 – GM Electrical Schematic, LPG Engine Harness (002000–003122)

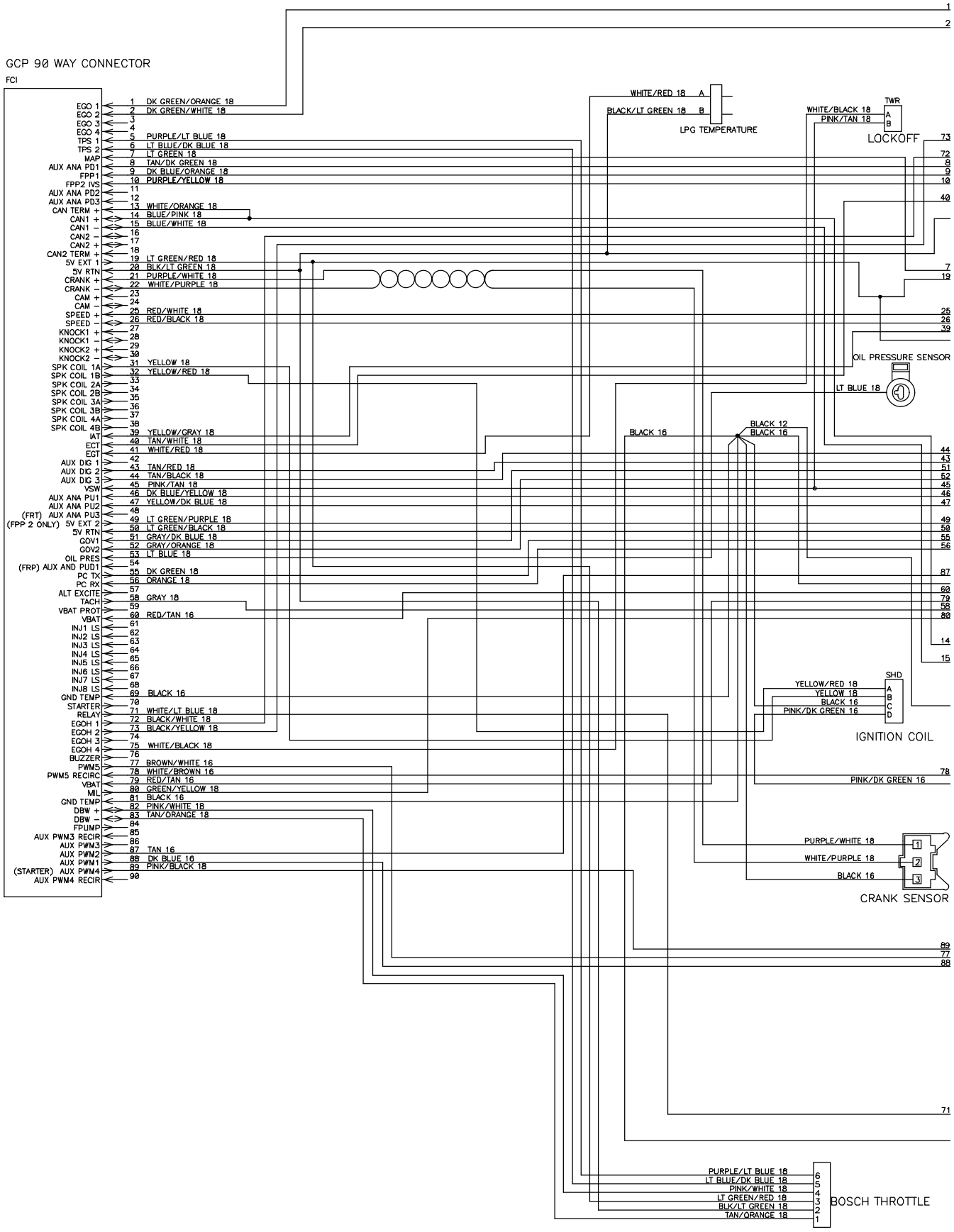

384990 – 354497

Fig. 93 – GM Electrical Schematic, LPG Engine Harness (002000–003122)

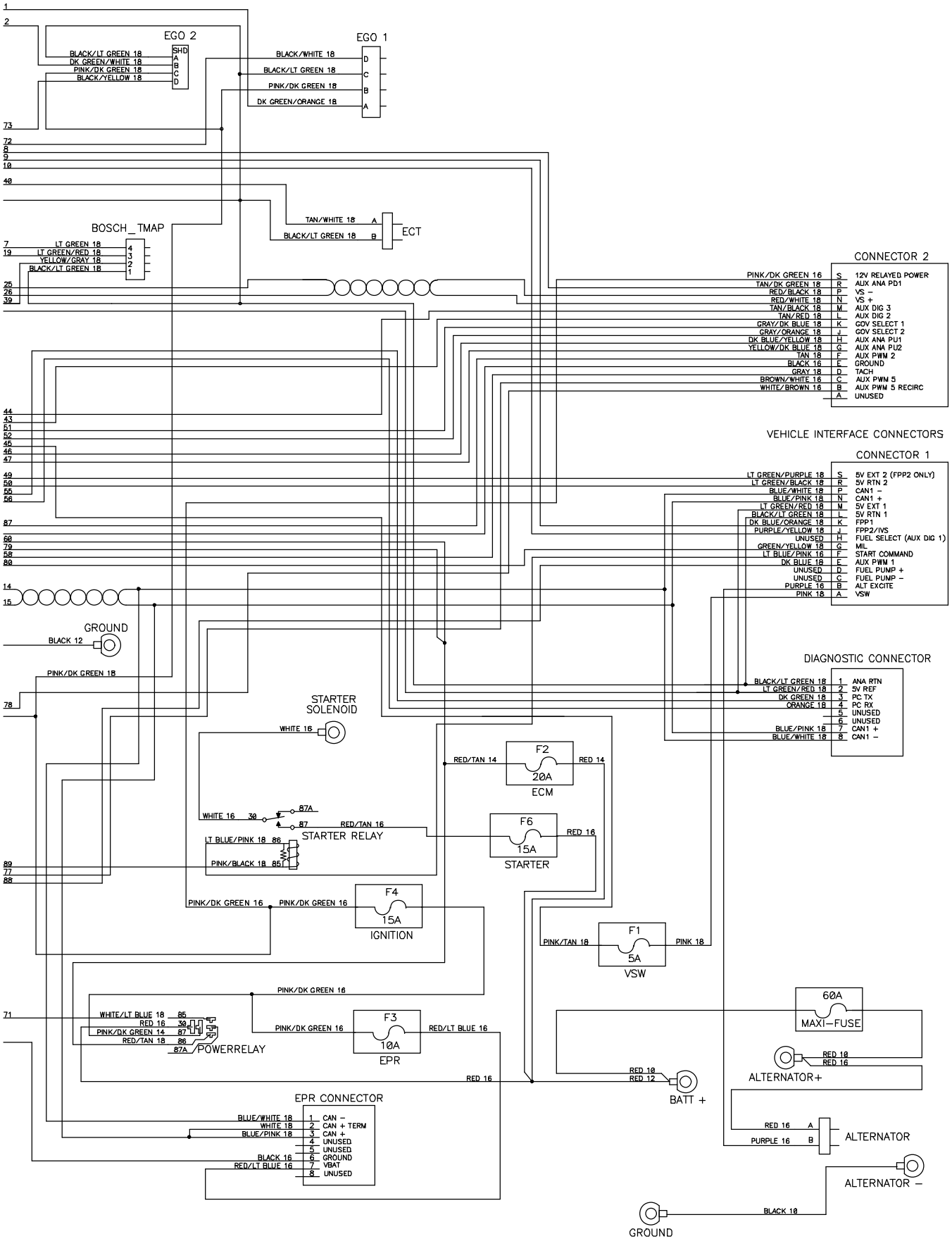

384990 – 354498

Fig. 94 – GM Electrical Schematic, LPG Engine Harness (003123–005999)

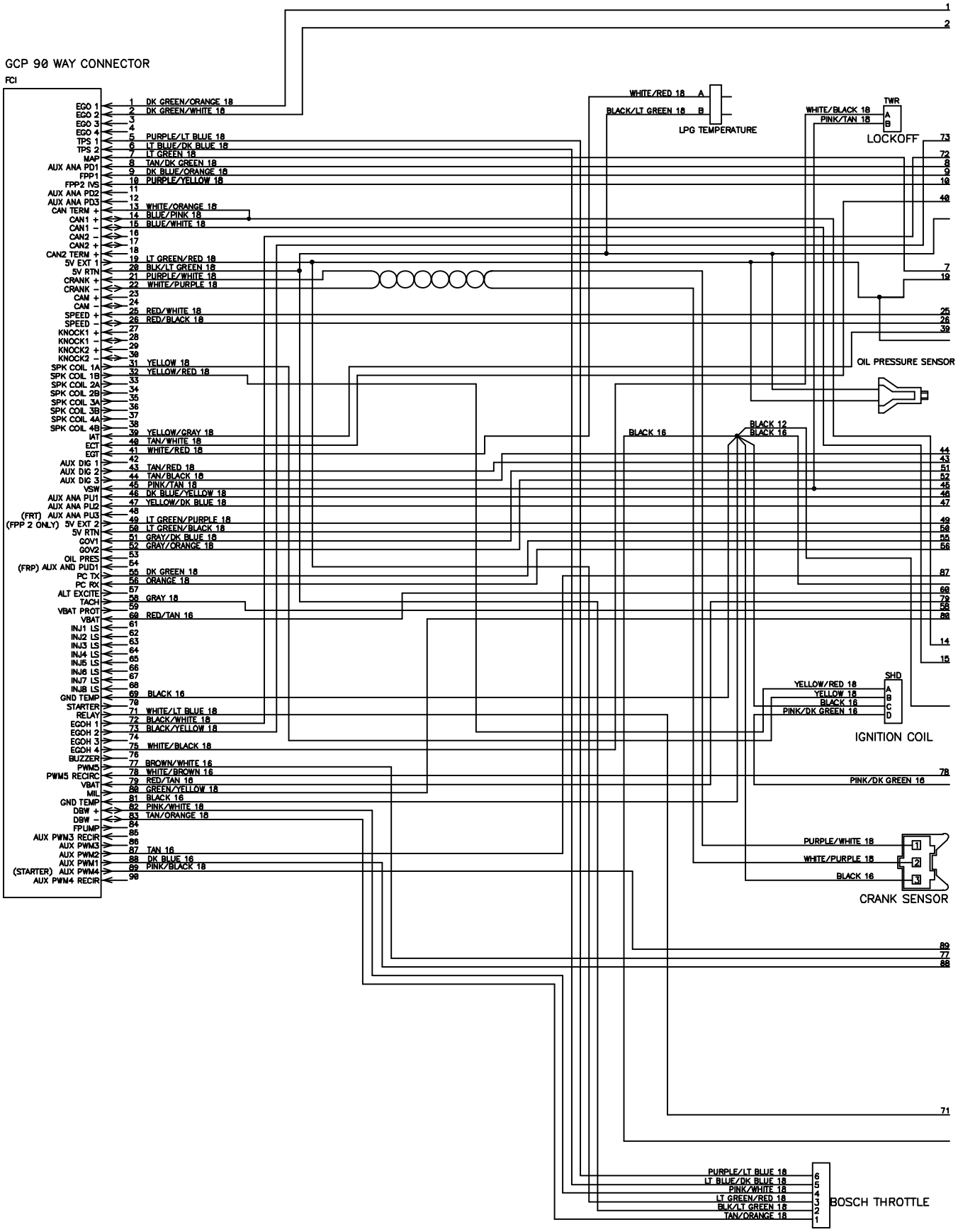

384990 – 354497

Fig. 94 – GM Electrical Schematic, LPG Engine Harness (003123–005999)

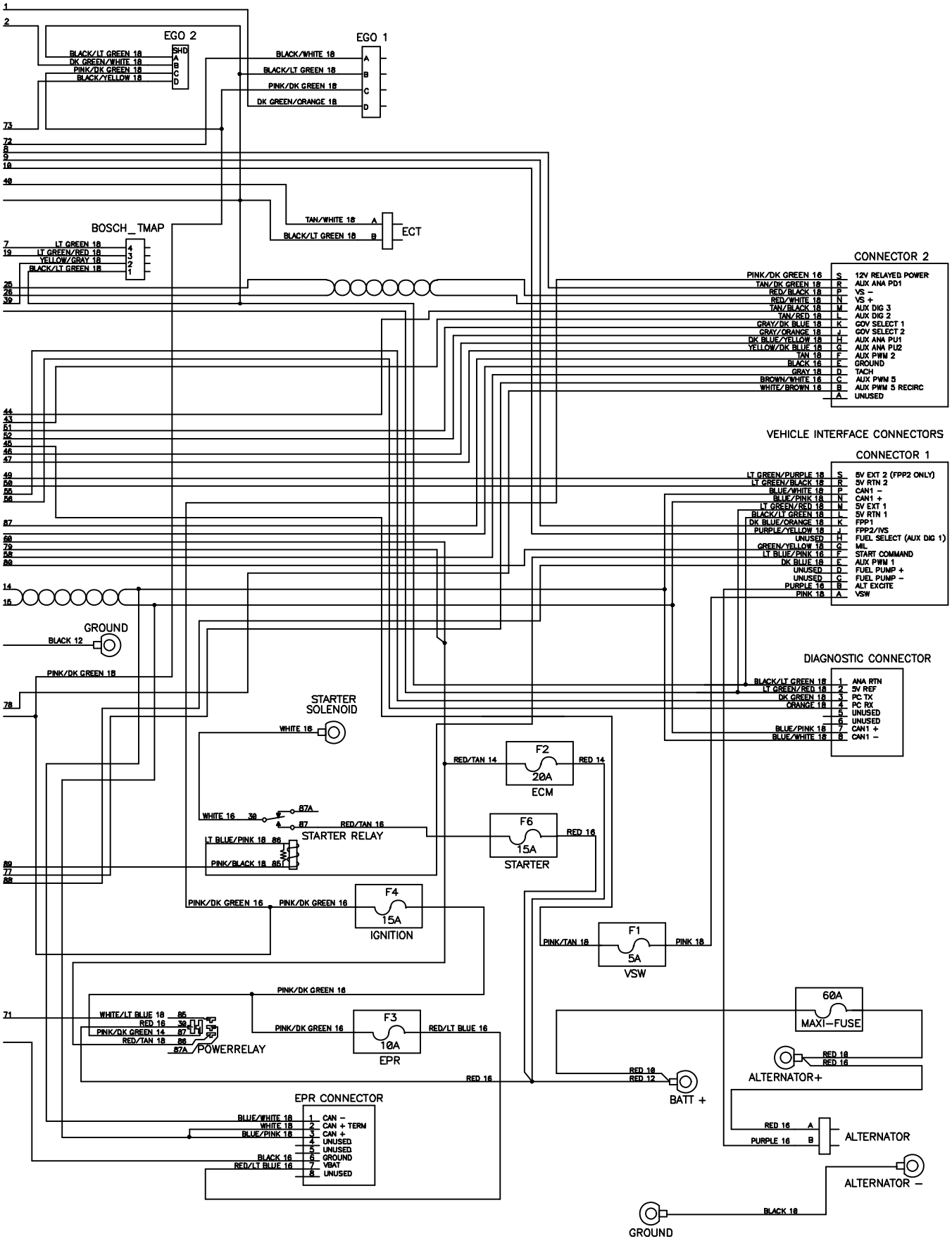

384990 – 354498

Fig. 95 – Mitsubishi Electrical Schematic (006000–)

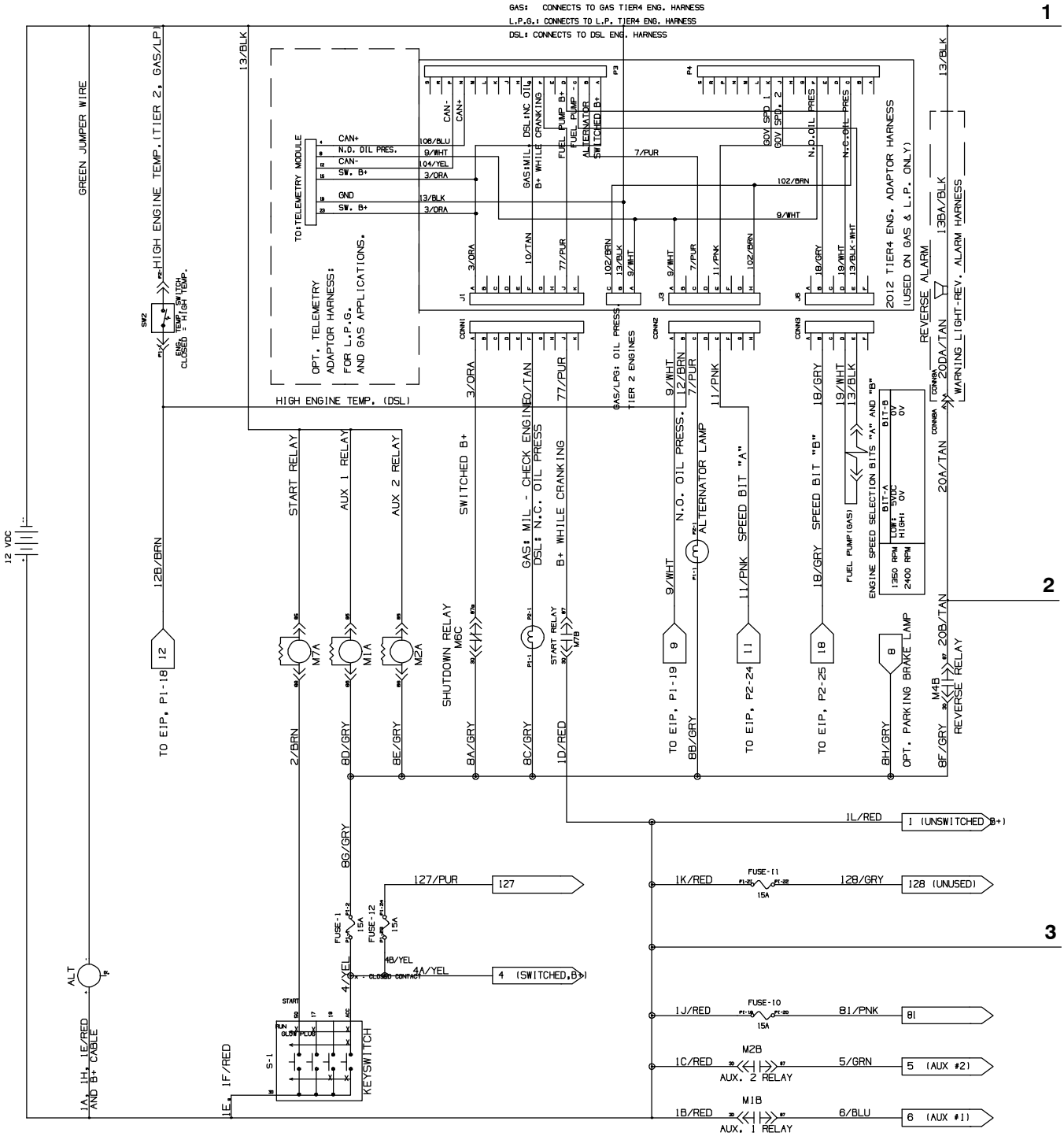

1018547 – 354458

Fig. 95 – Mitsubishi Electrical Schematic (006000–)

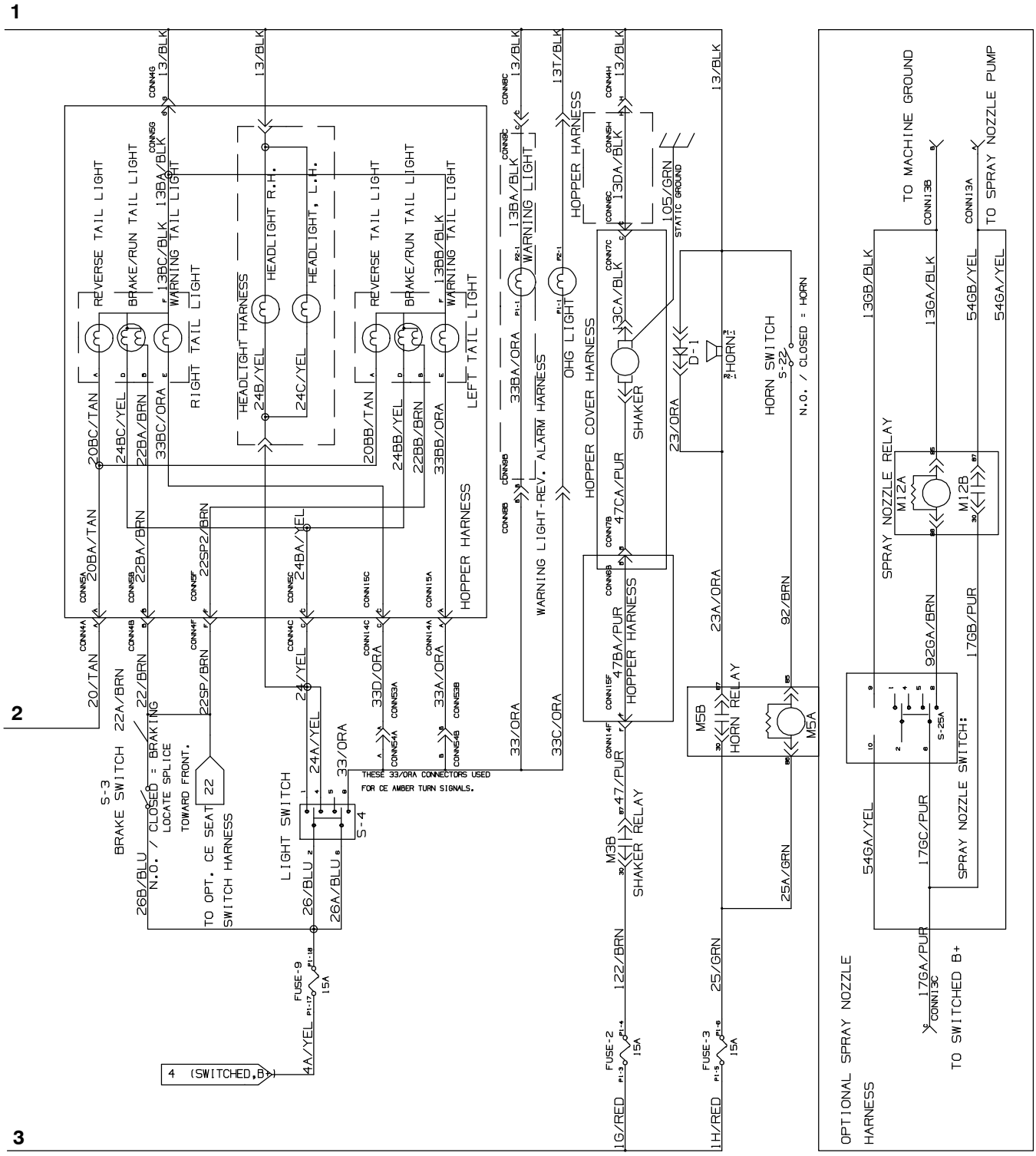

1018547 – 354458

Fig. 95 – Mitsubishi Electrical Schematic (006000–)

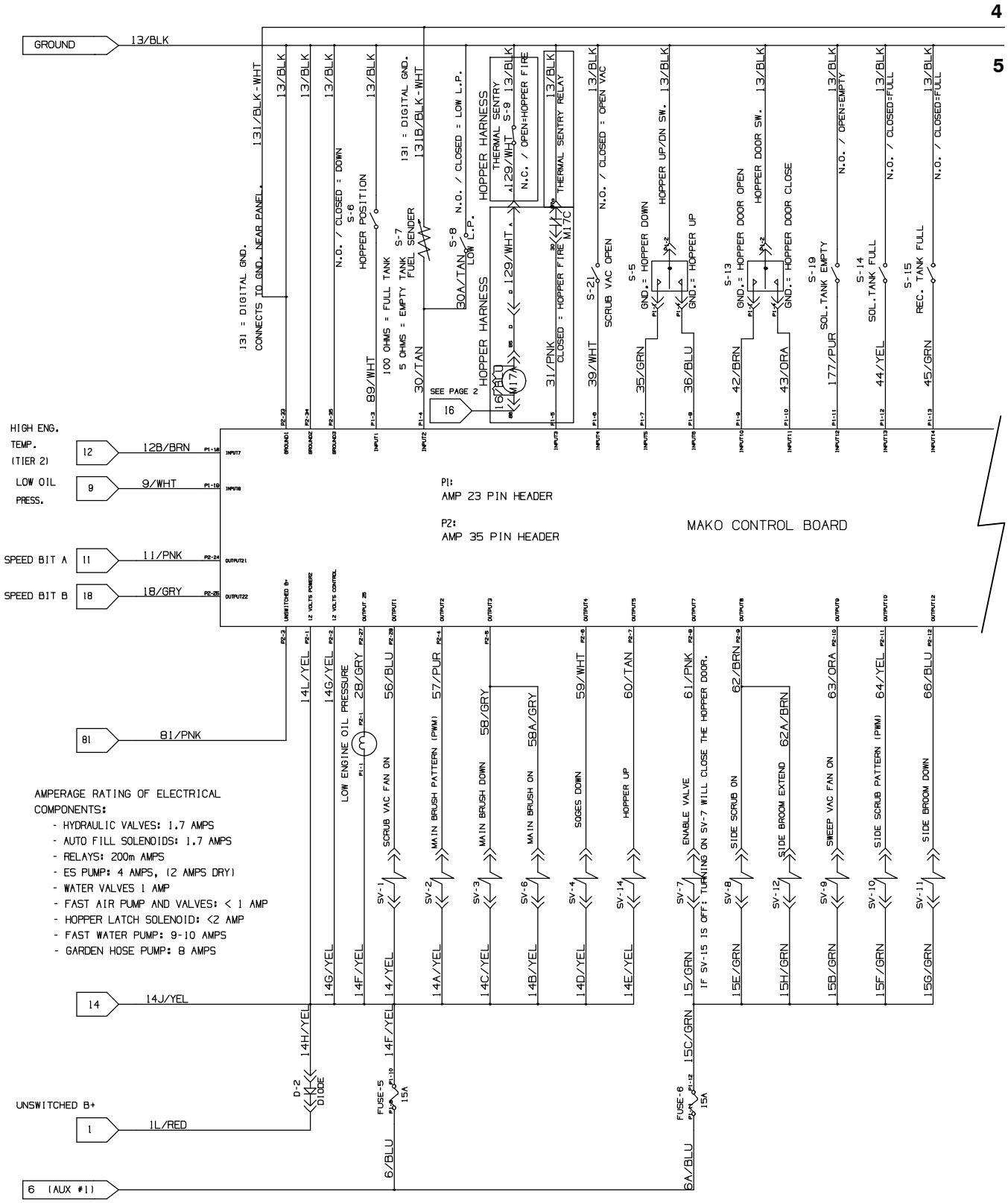

1018547 – 354458

Fig. 95 – Mitsubishi Electrical Schematic (006000–)

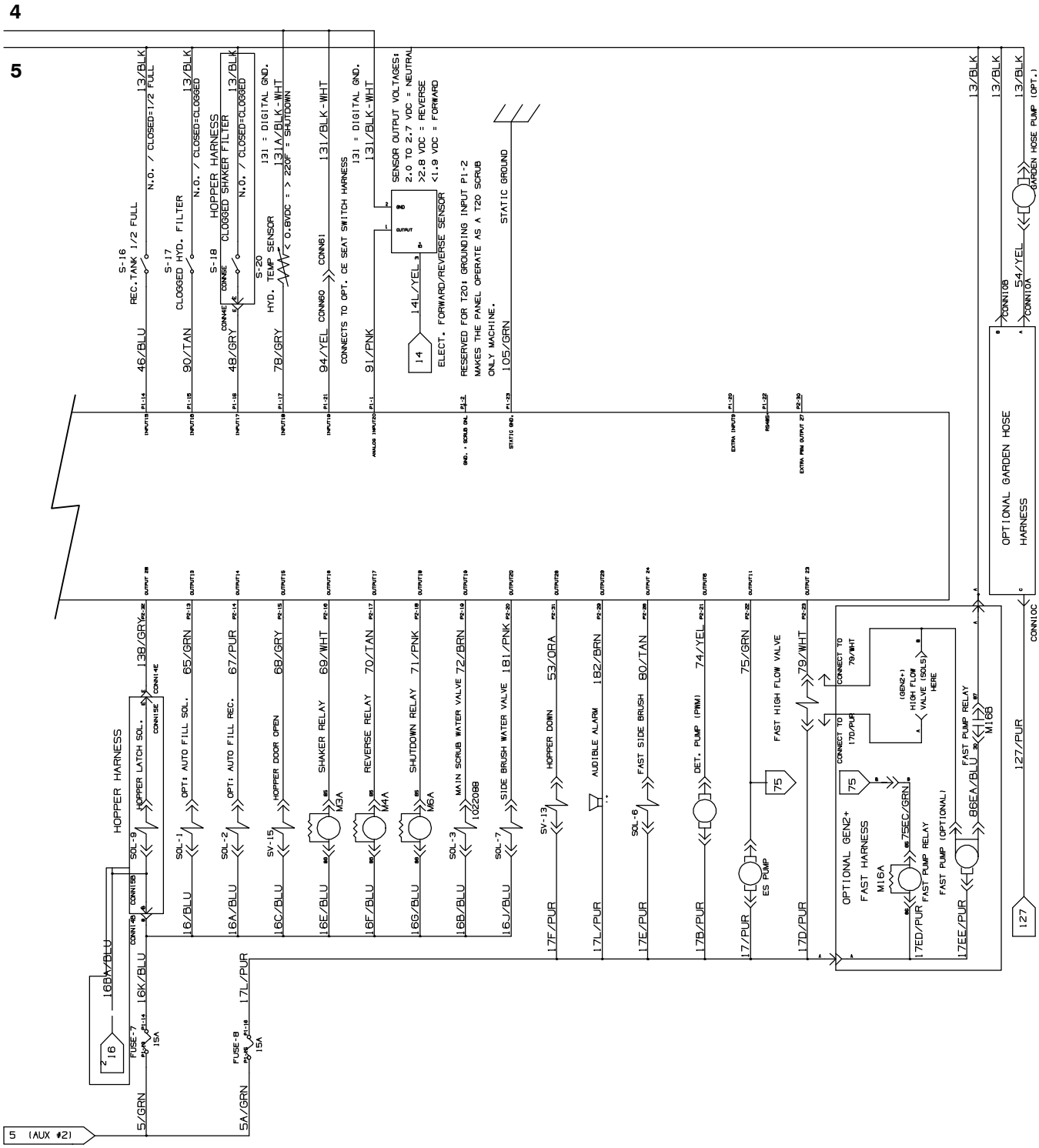

1018547 – 354458

Fig. 95 – Mitsubishi Electrical Schematic (006000–)

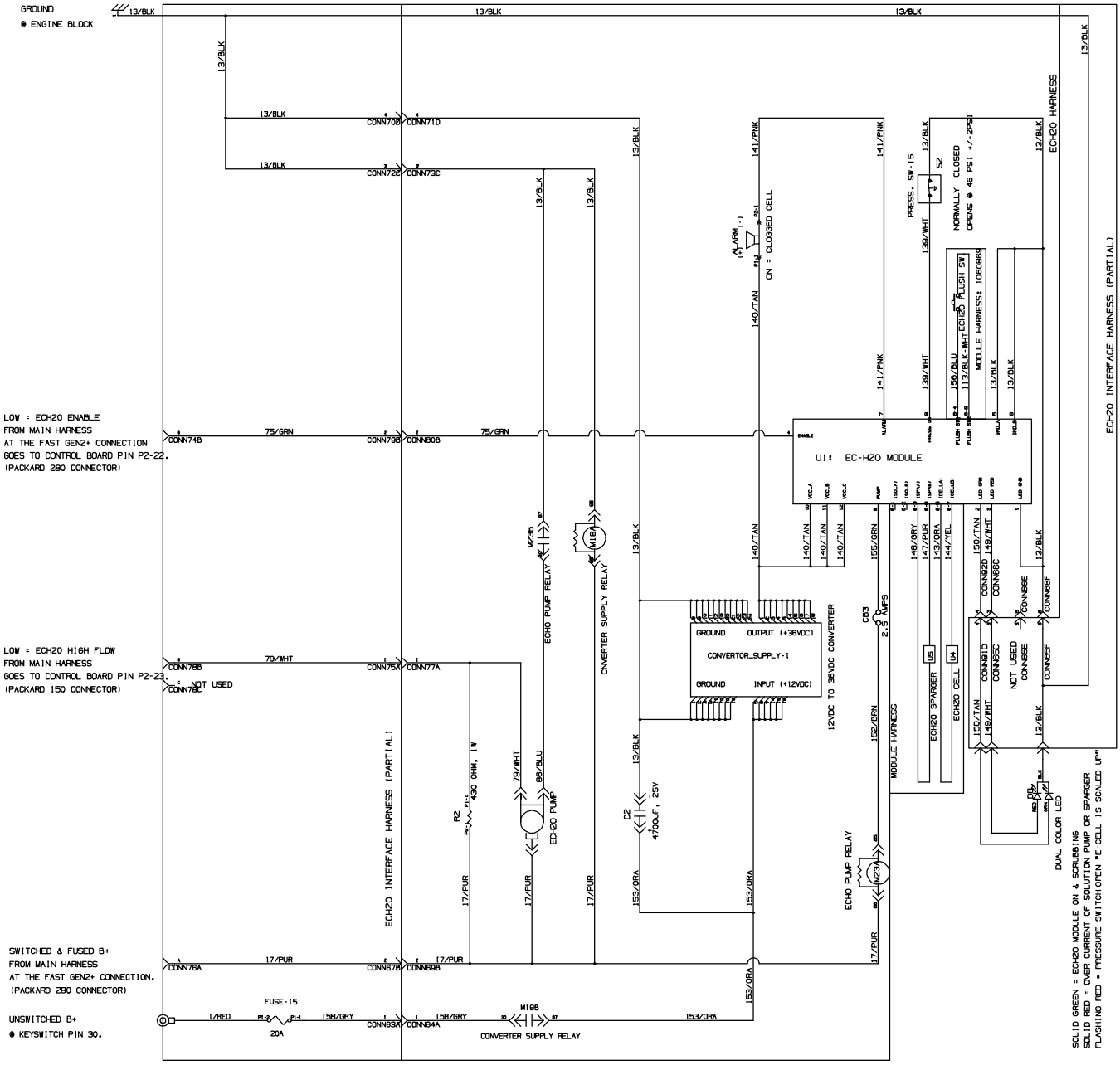

EC-H2O OPTION

1018547 – 354458 – MITS

Fig. 95 – Mitsubishi Electrical Schematic (006000–)

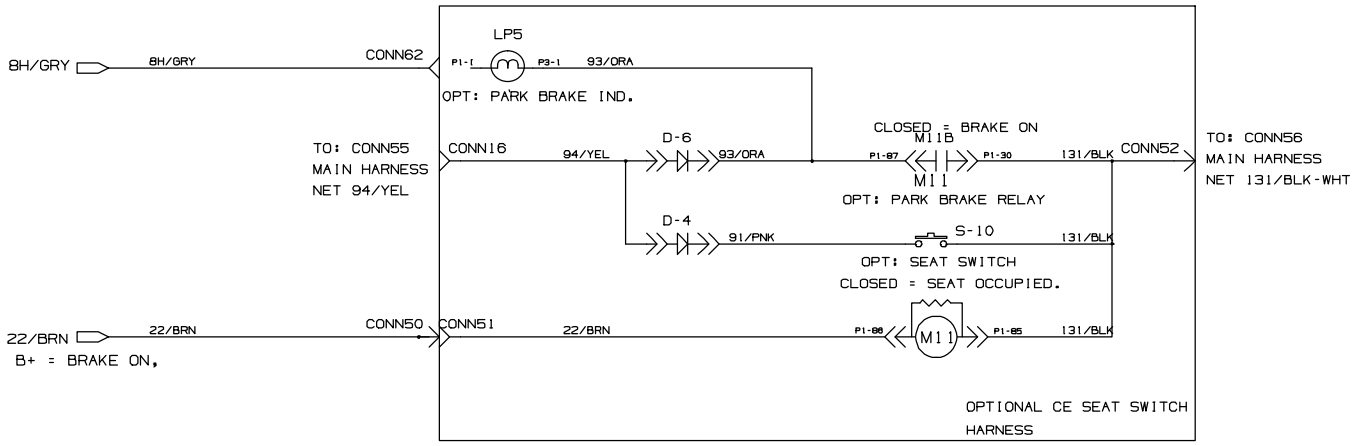

OPTIONAL CE SEAT SWITCH SHUTDOWN CIRCUIT.

1018547 – 354458 – MITS

Fig. 96 – Mitsubishi Electrical Schematic, Gas Engine Harness (006000–)

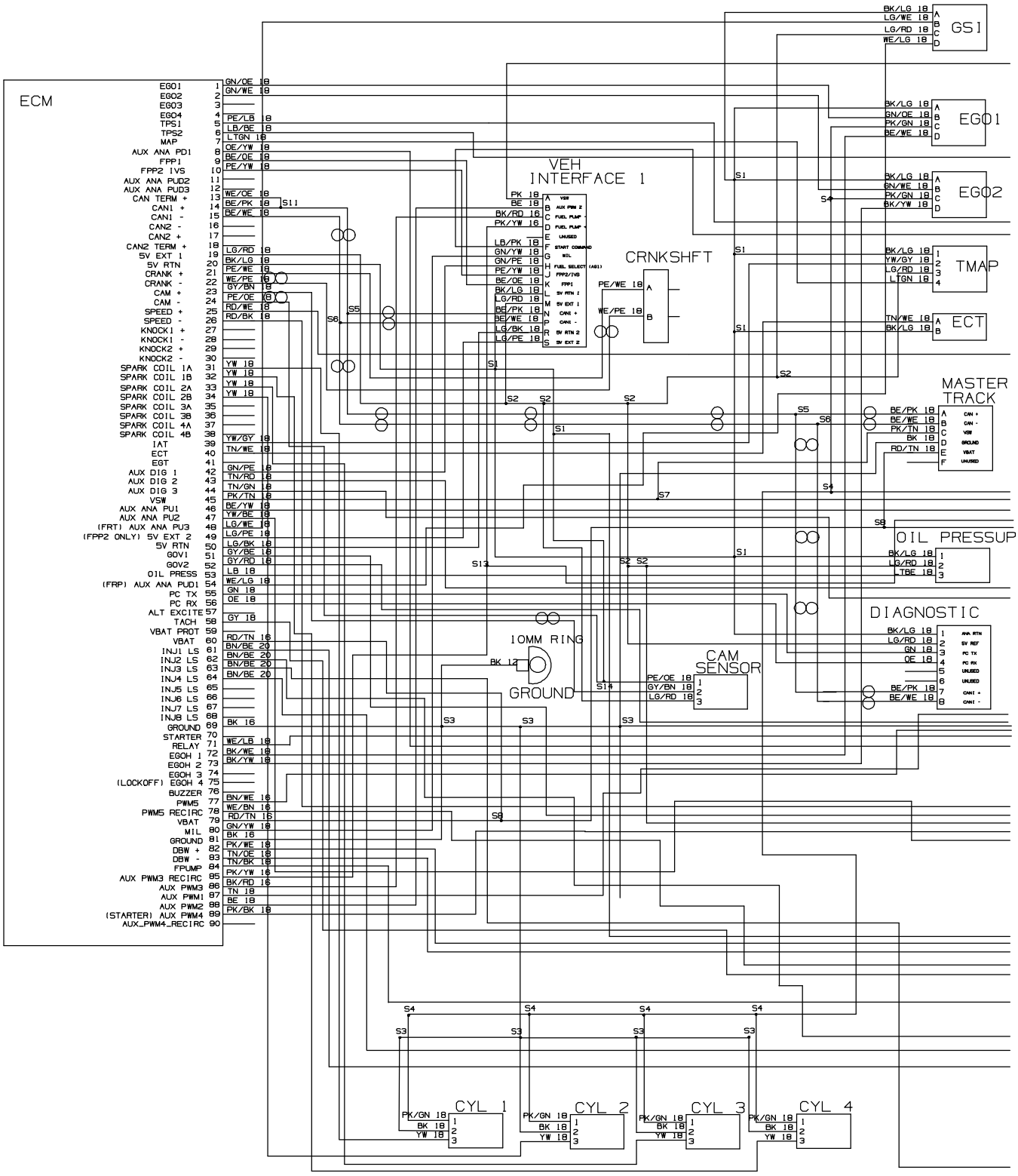

1071653– 356303

Fig. 96 – Mitsubishi Electrical Schematic, Gas Engine Harness (006000–)

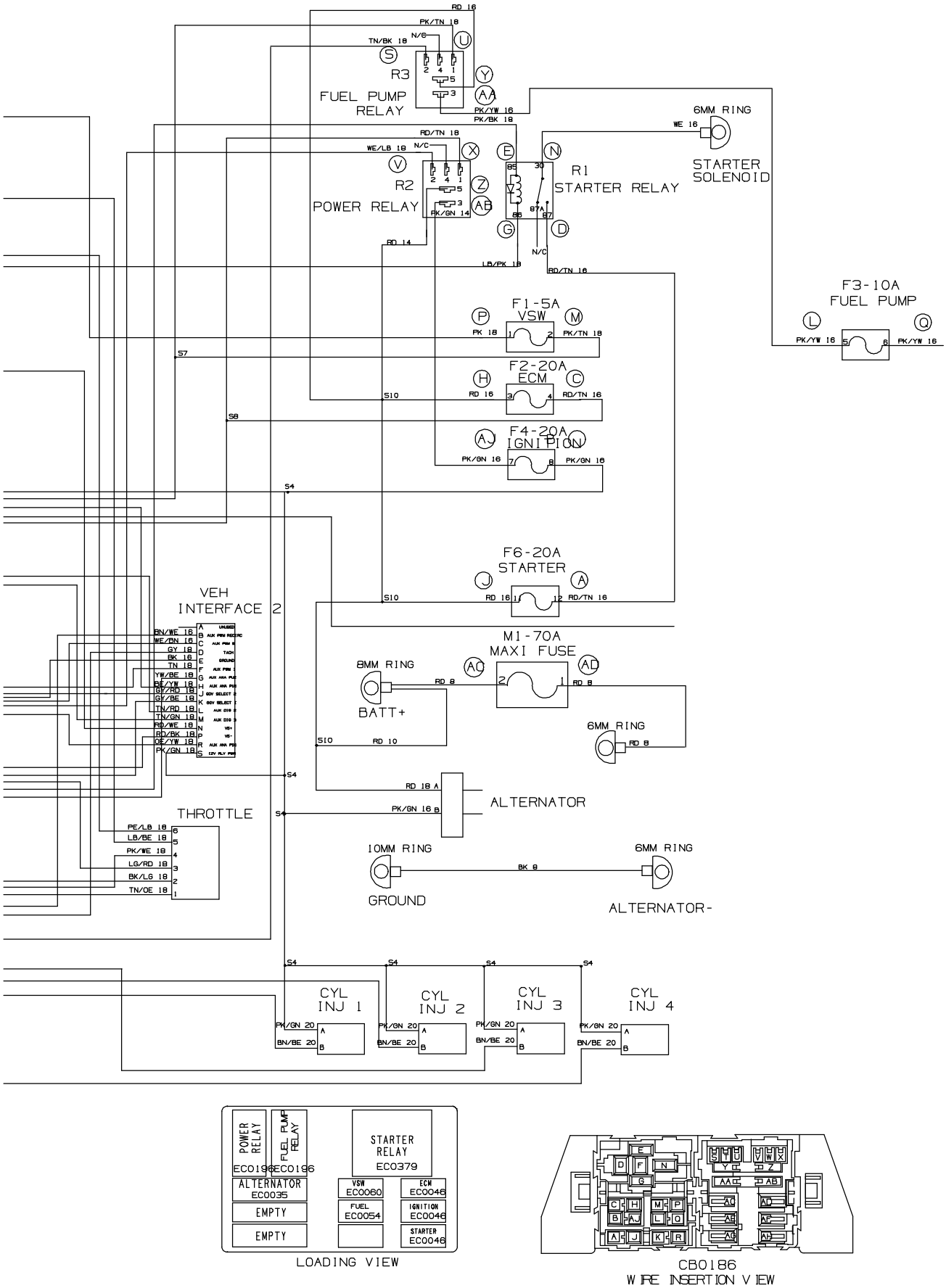

1071653– 356303

Fig. 97 – Mitsubishi Electrical Schematic, LPG Engine Harness (006000–)

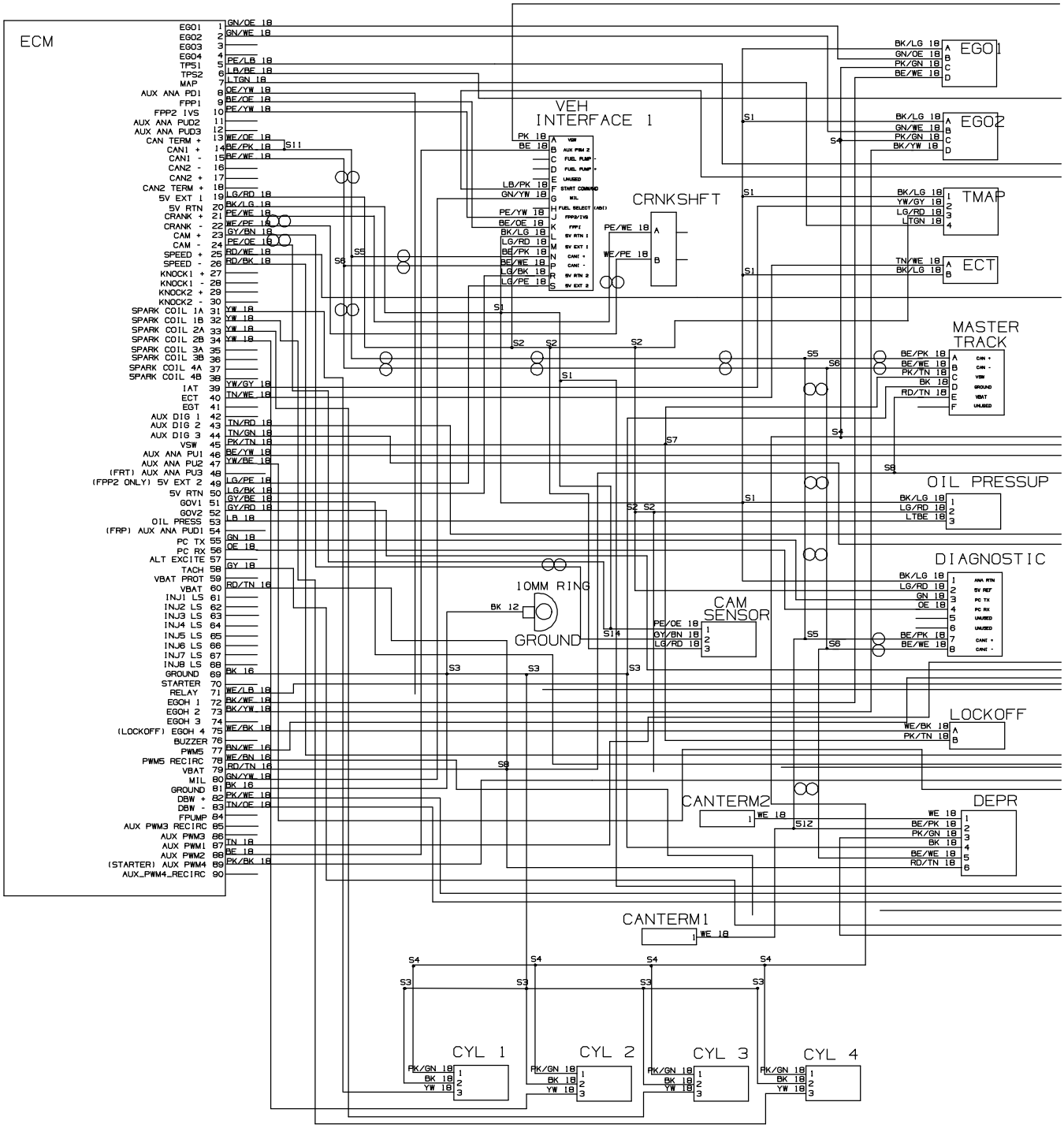

1071654– 356304

Fig. 97 – Mitsubishi Electrical Schematic, LPG Engine Harness (006000–)

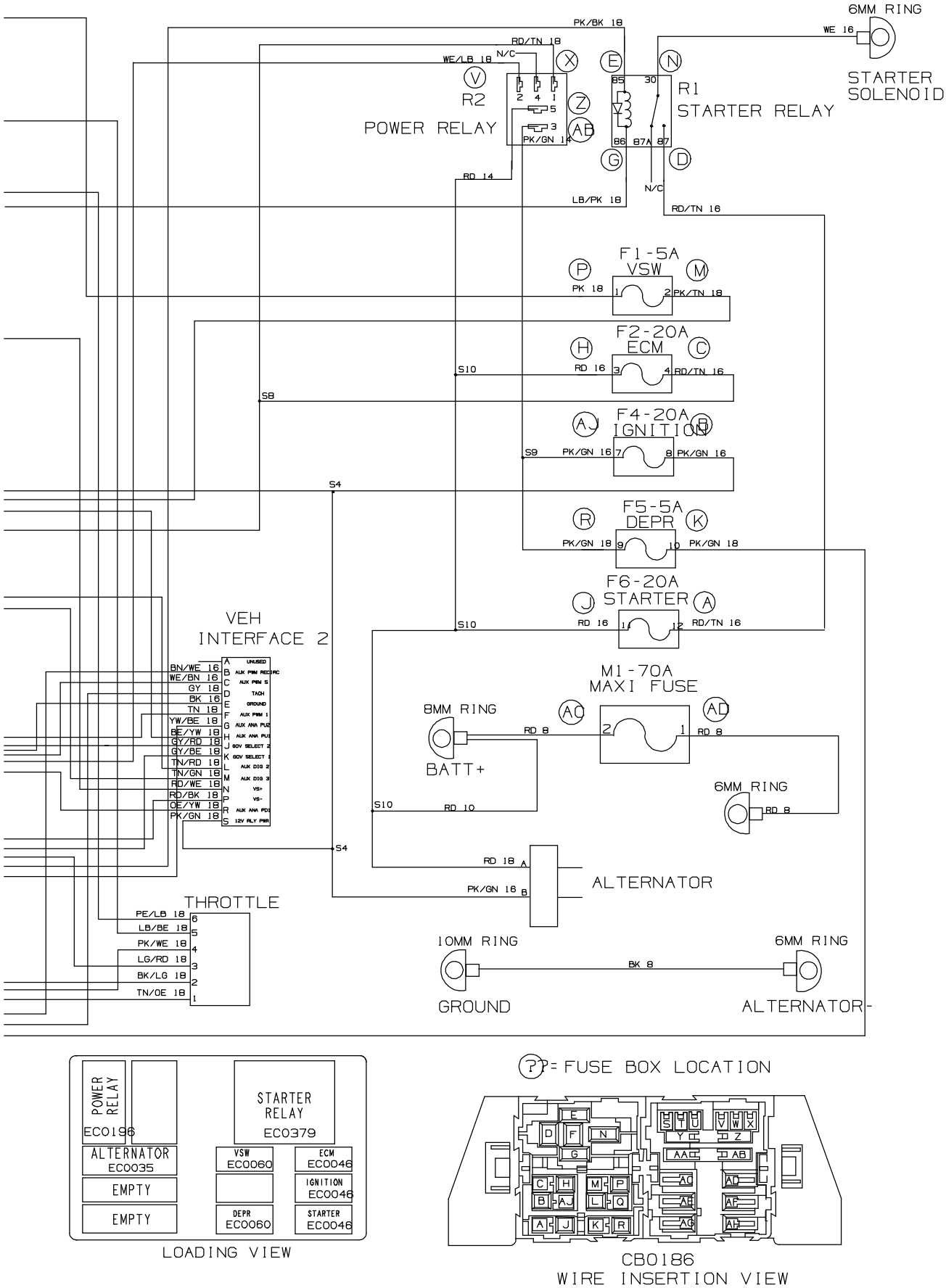

1071654– 356304

Fig. 98 – Electrical Wire Harnesses Group, Main

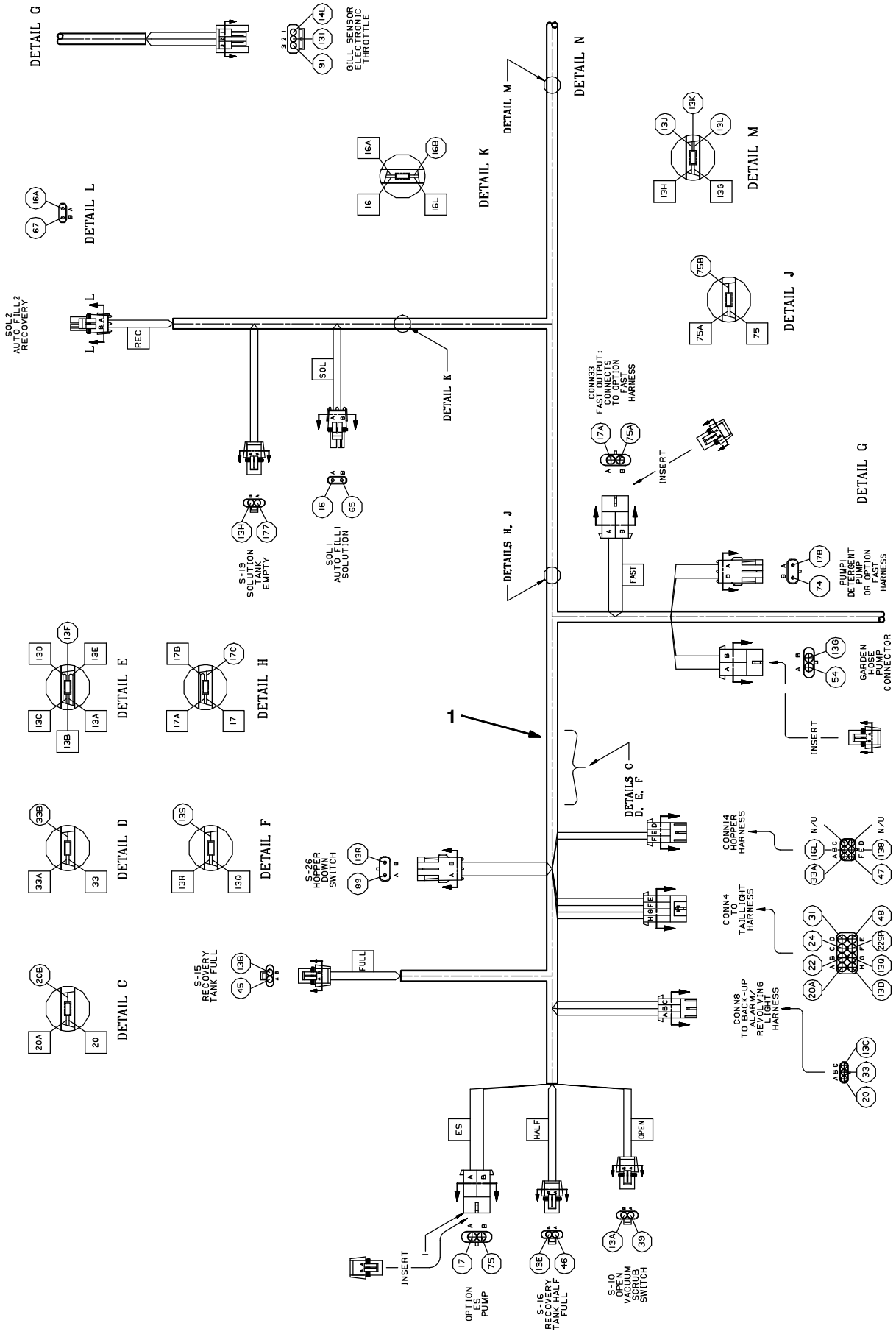

Fig. 98 – Electrical Wire Harness Group, Main

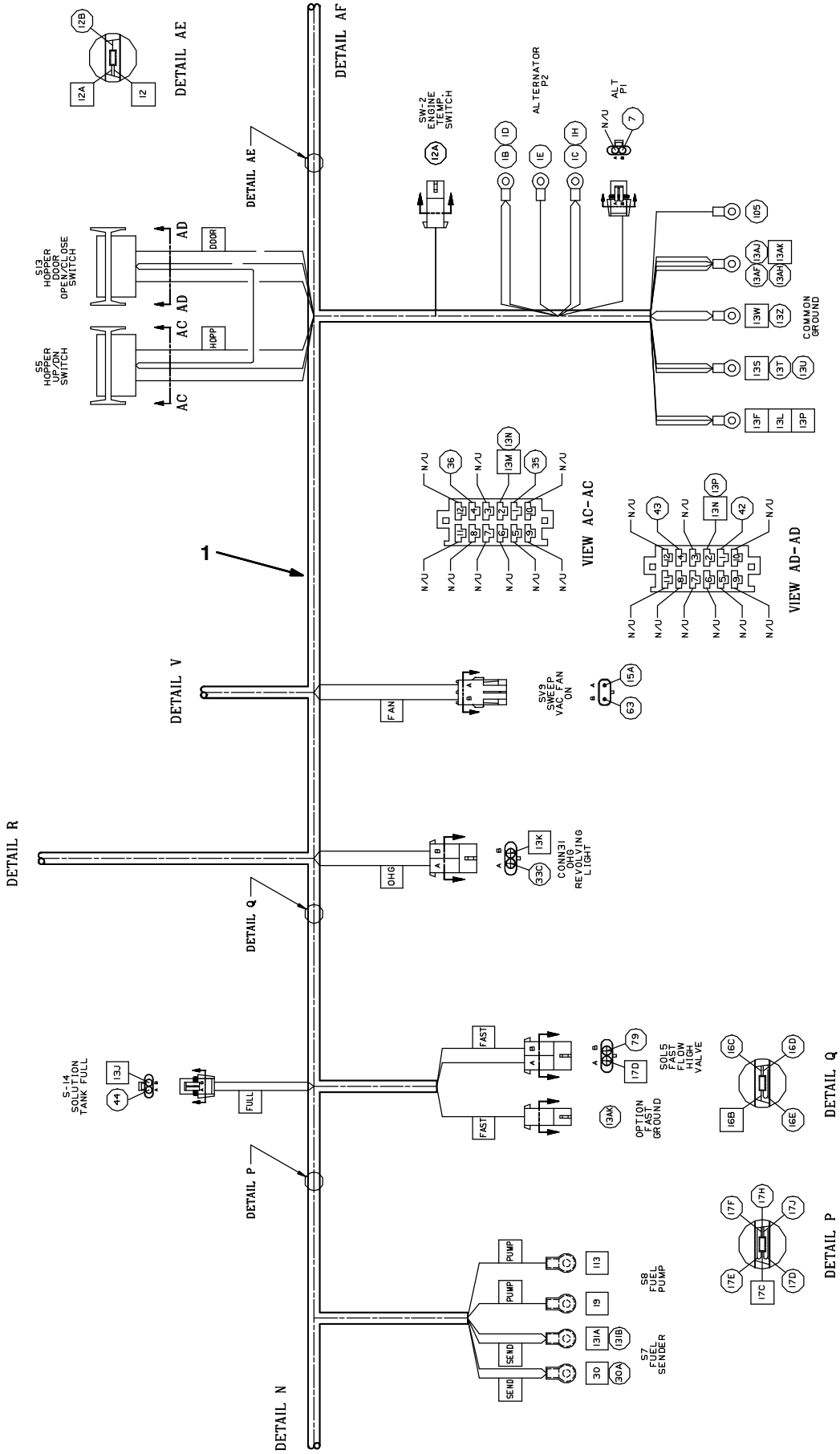

Fig. 98 – Electrical Wire Harness Group, Main

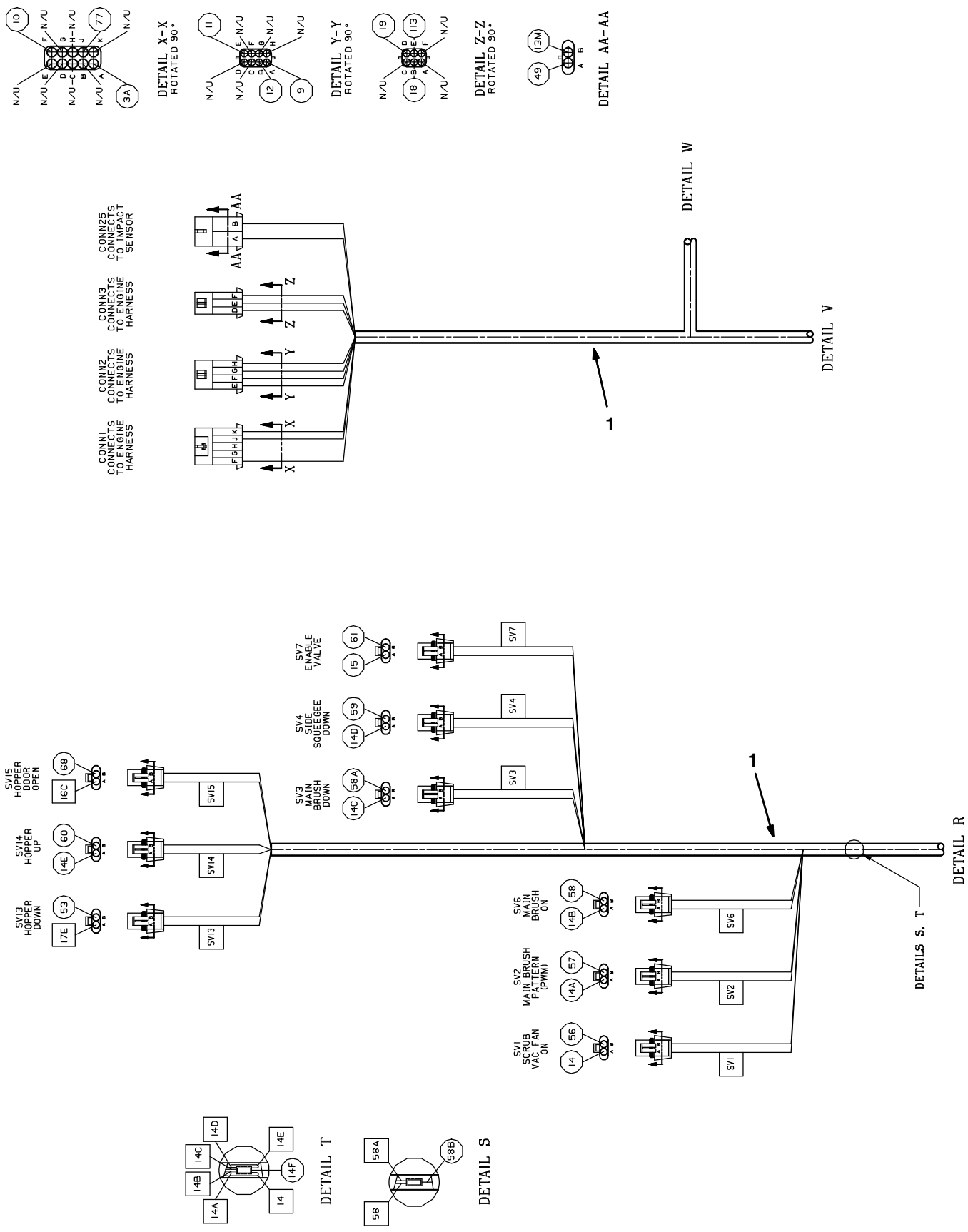

Fig. 98 – Electrical Wire Harness Group, Main

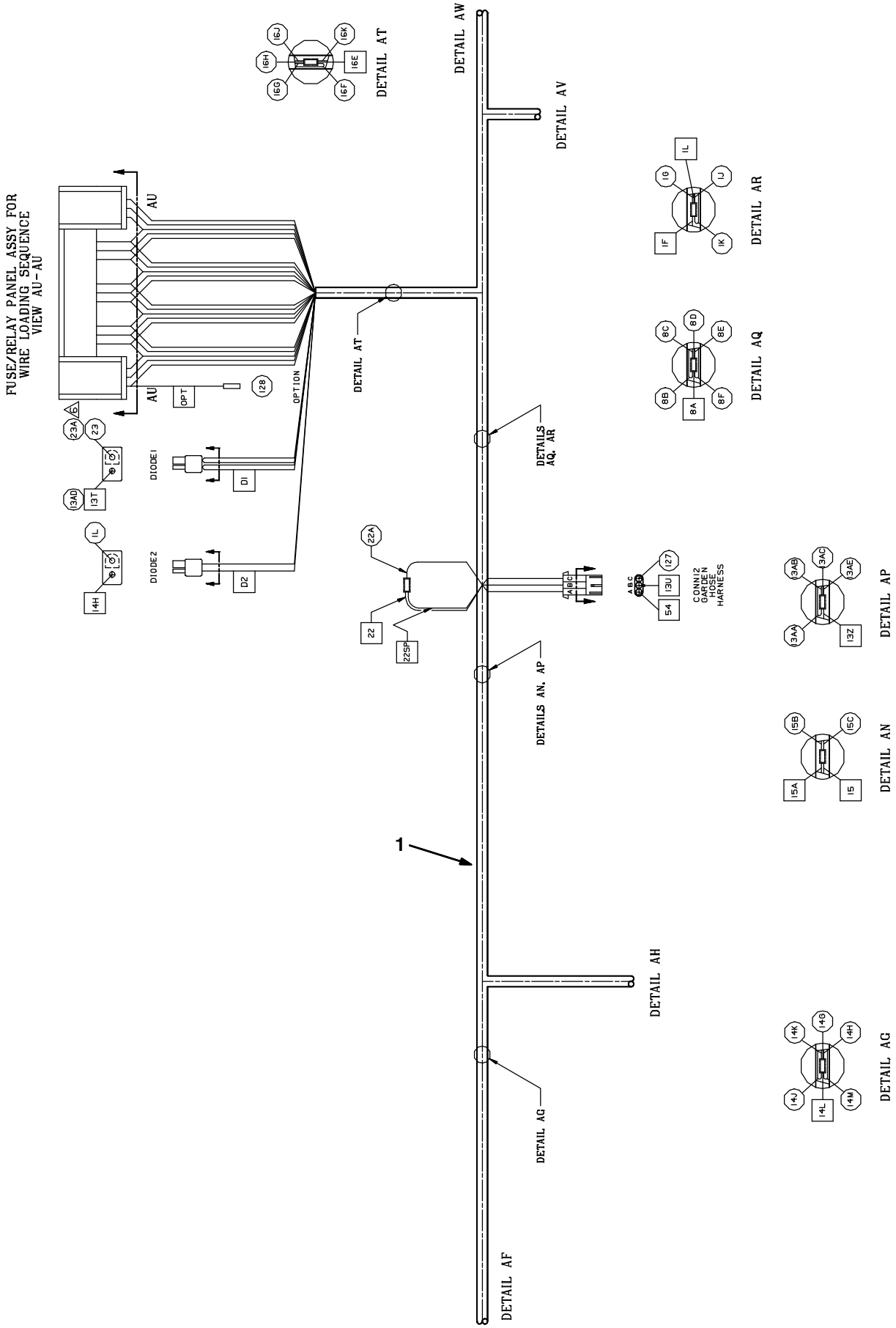

Fig. 98 – Electrical Wire Harness Group, Main

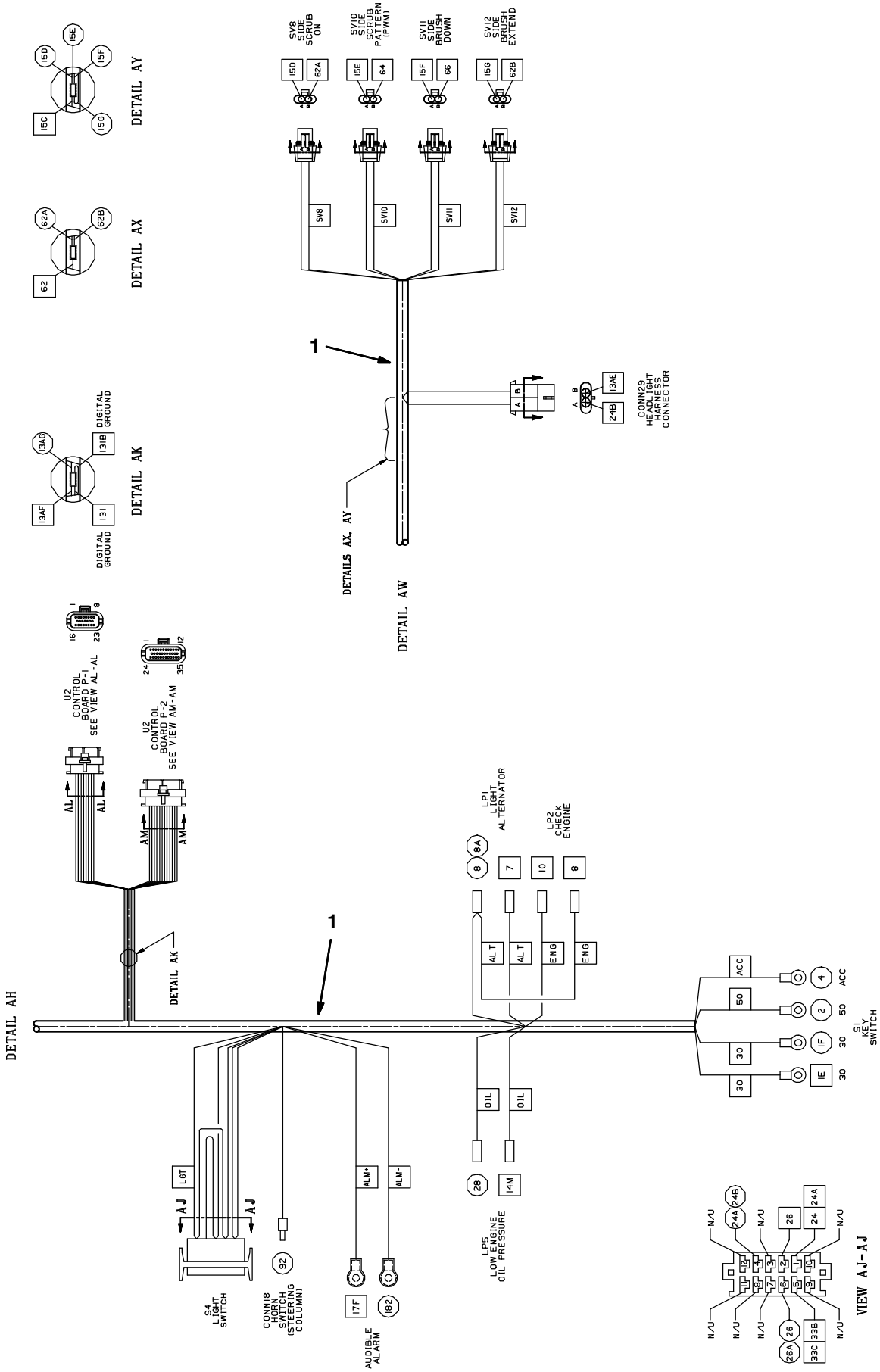

Fig. 98 – Electrical Wire Harness Group, Main

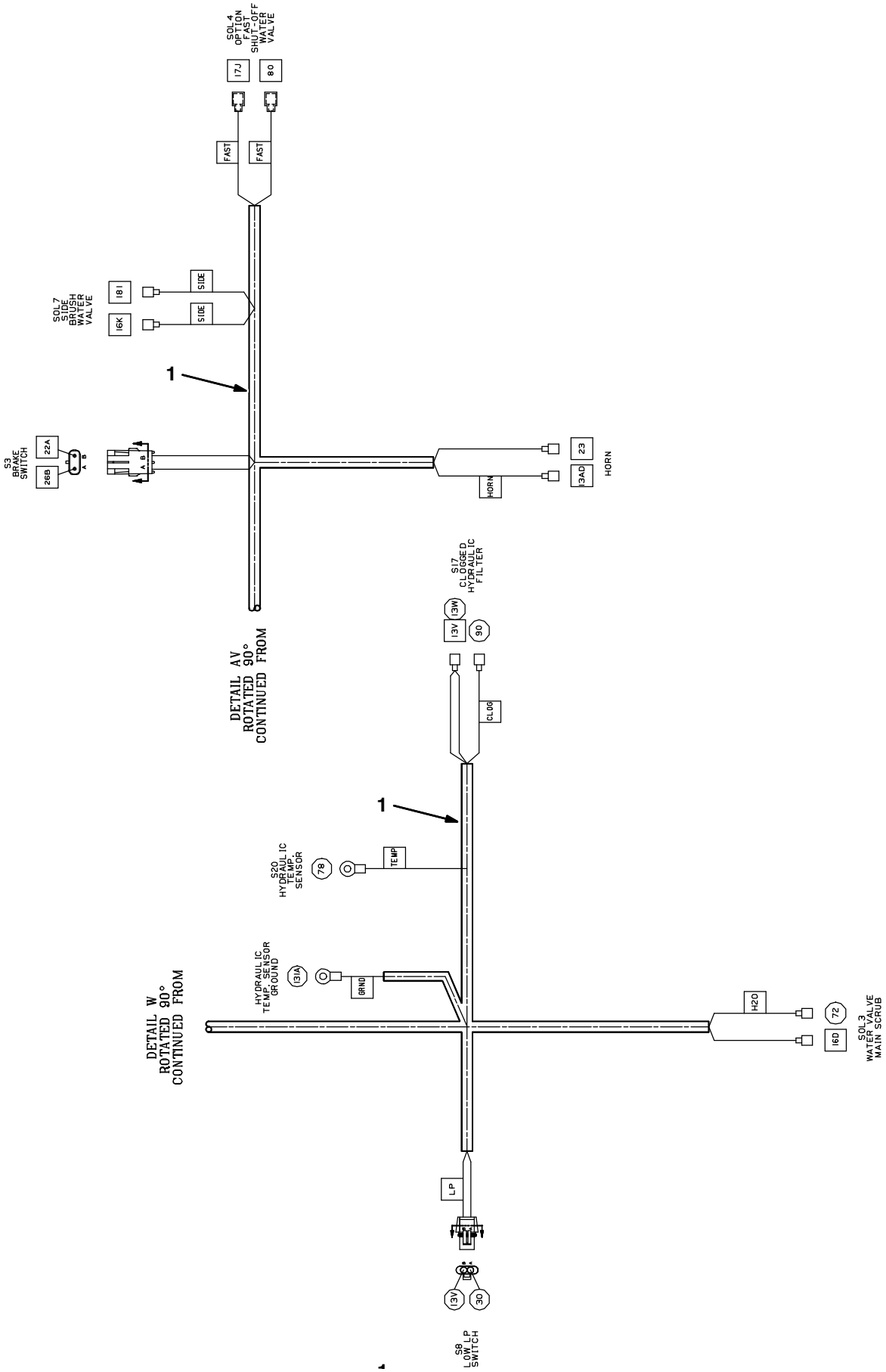

Fig. 98 – Electrical Wire Harness Group, Main

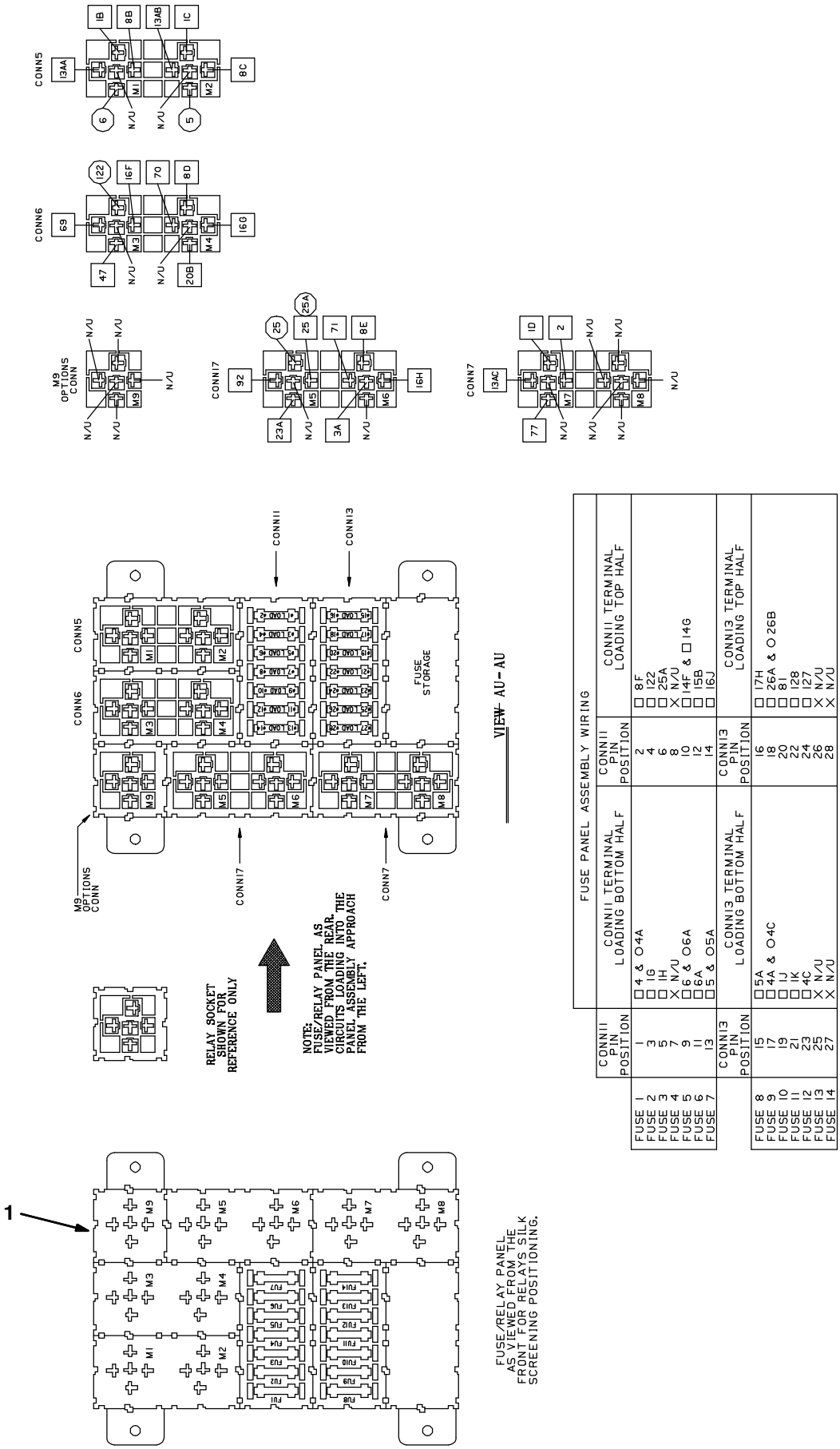

Fig. 98 – Electrical Wire Harness Group, Main

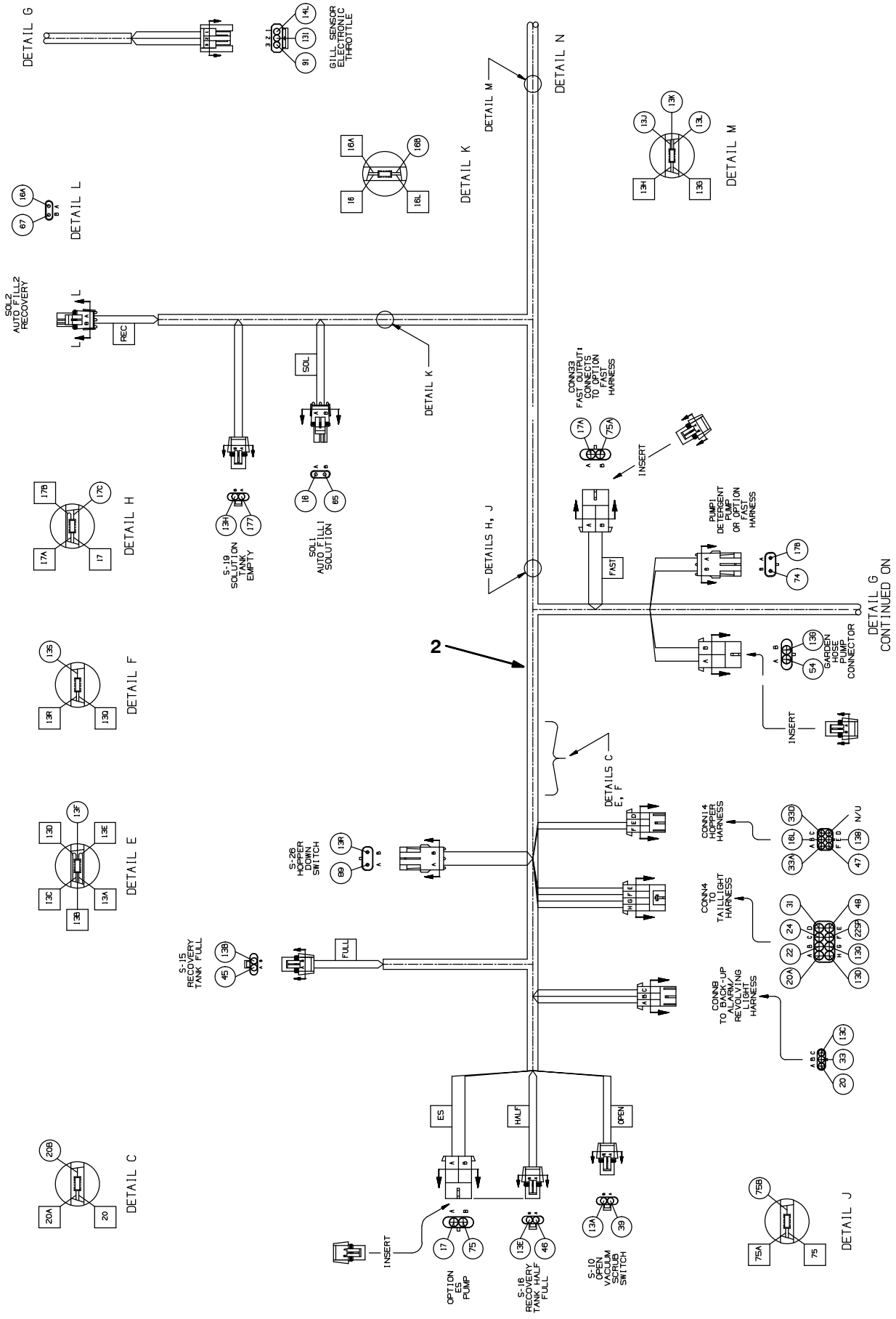

Fig. 98 – Electrical Wire Harness Group, Main

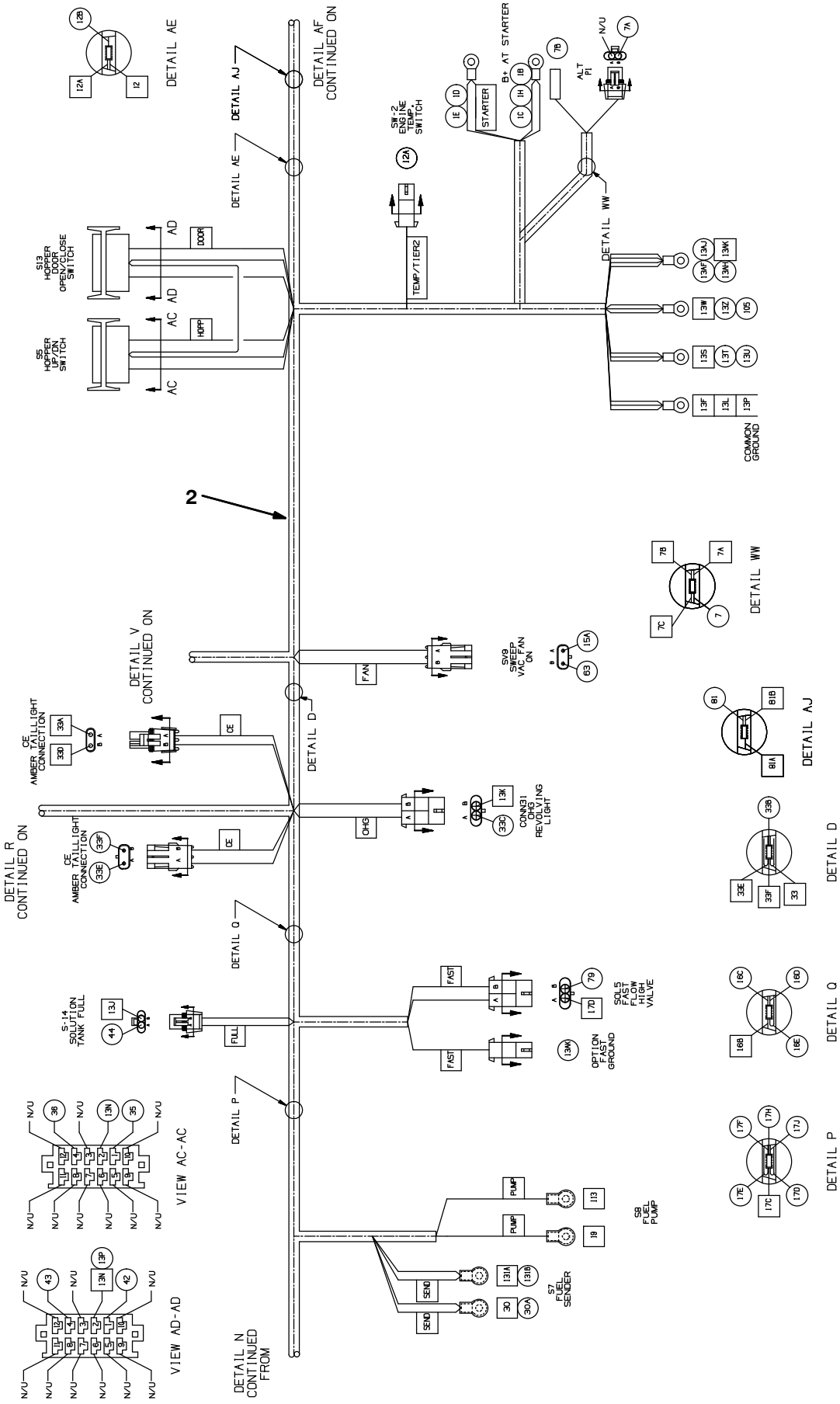

Fig. 98 – Electrical Wire Harness Group, Main

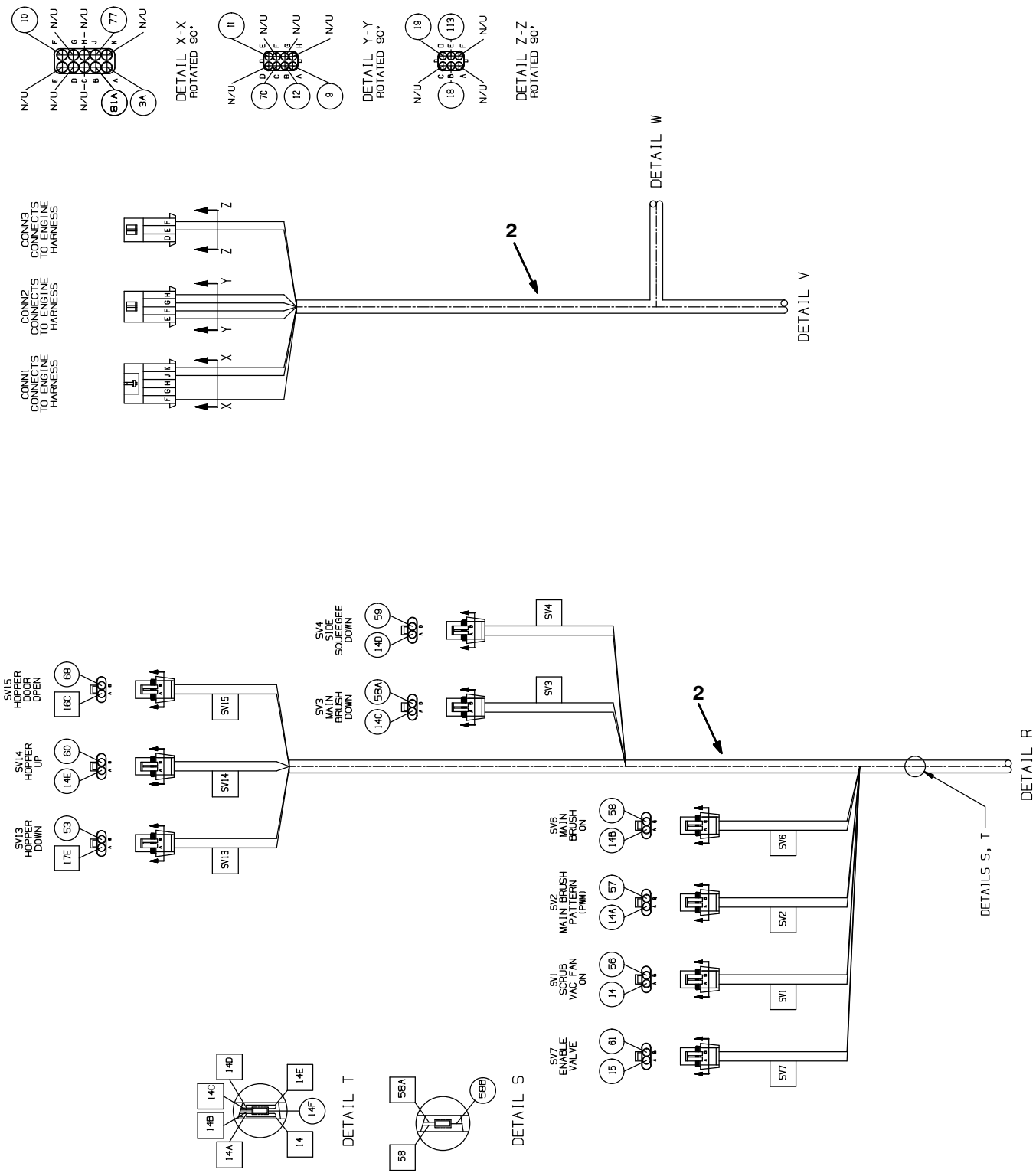

Fig. 98 – Electrical Wire Harness Group, Main

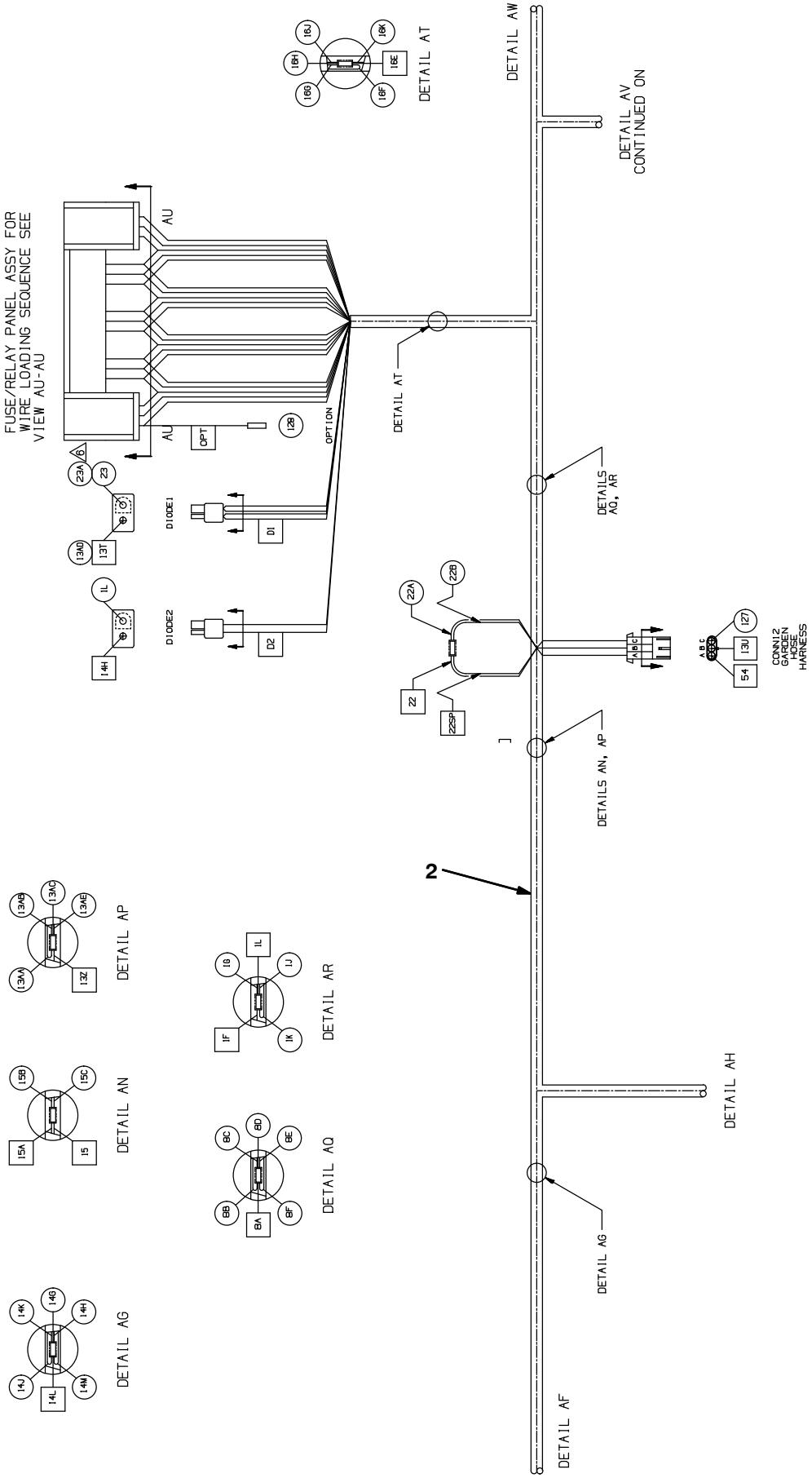

Fig. 98 – Electrical Wire Harness Group, Main

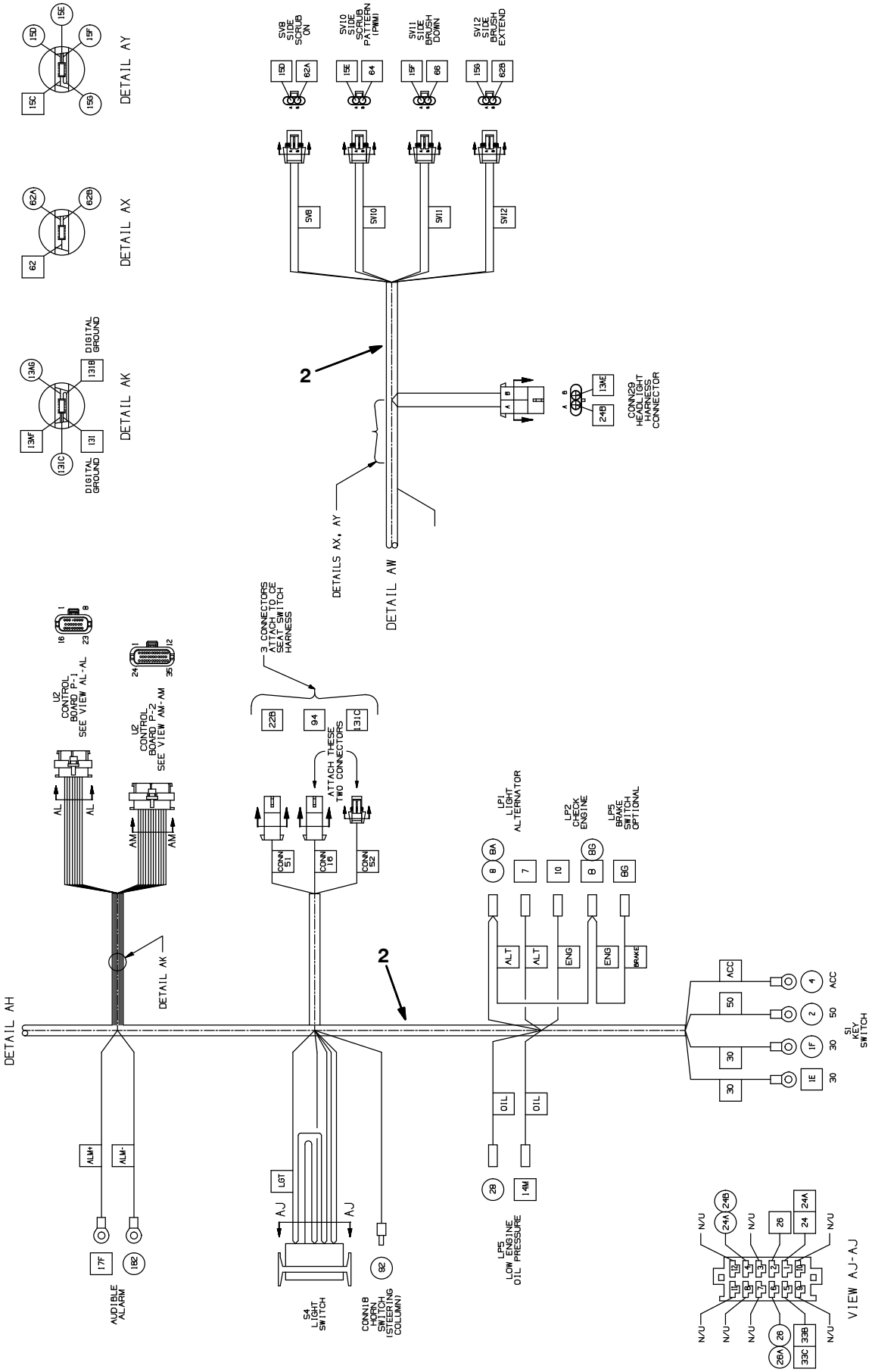

Fig. 98 – Electrical Wire Harness Group, Main

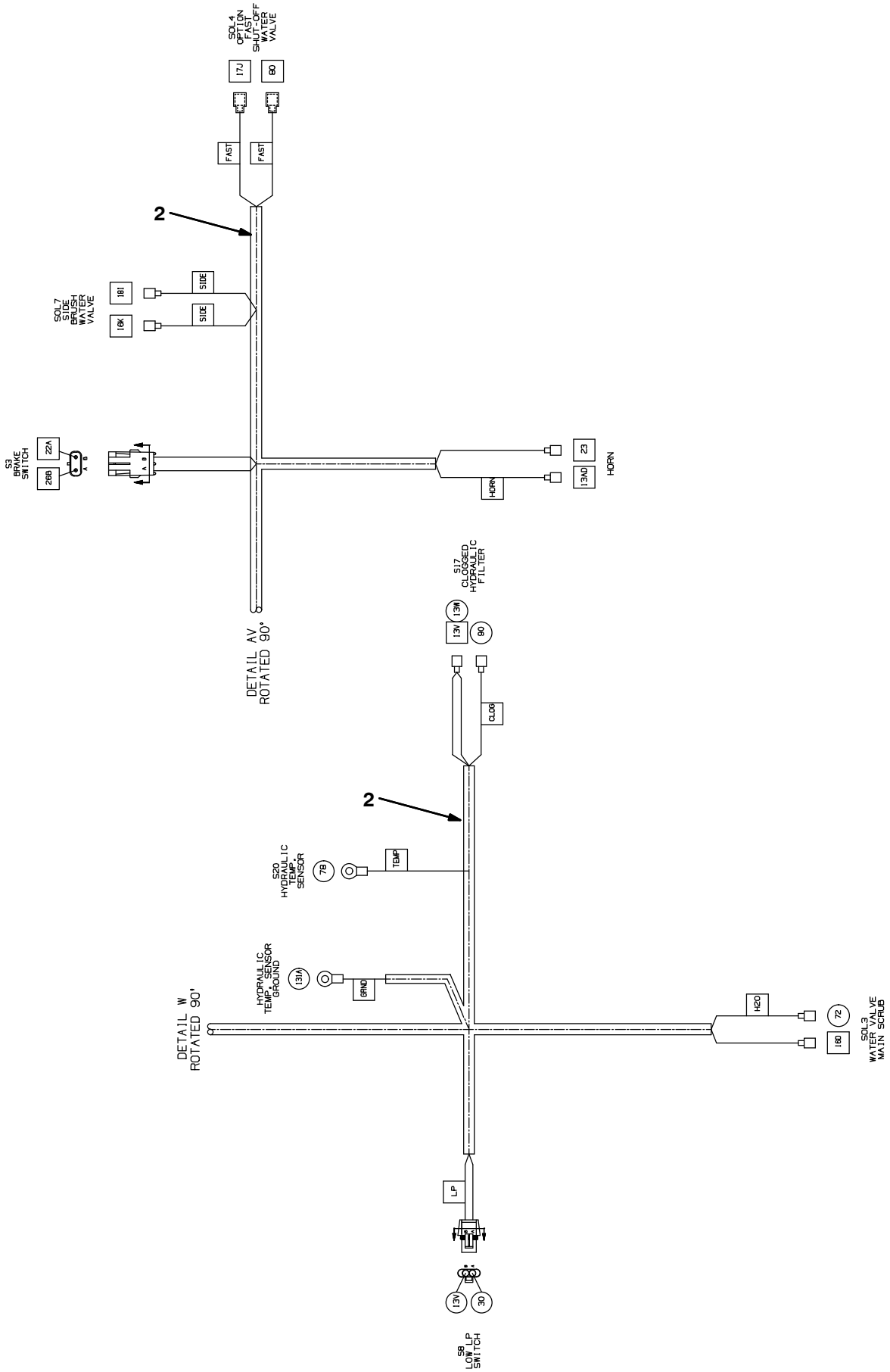

Fig. 98 – Electrical Wire Harness Group, Main

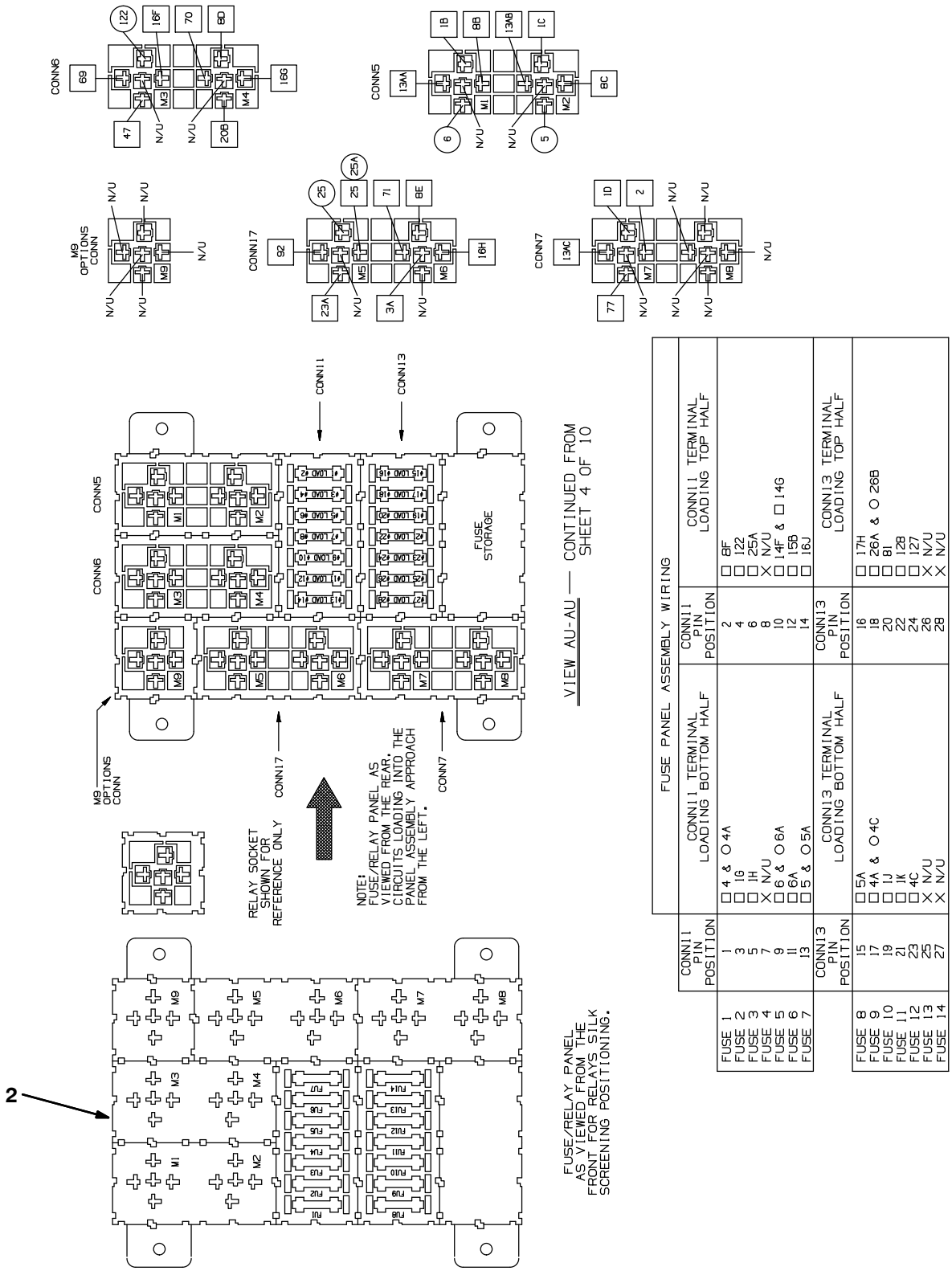

Ref.	Part No.	Serial Number	Description	Qty.
1	1018549	(000000–002273)	Harness, Main [M20]	1
2	1071603	(002274–)	Harness, Main [M20]	1

Fig. 99 – Electrical Wire Harness Group, Headlight

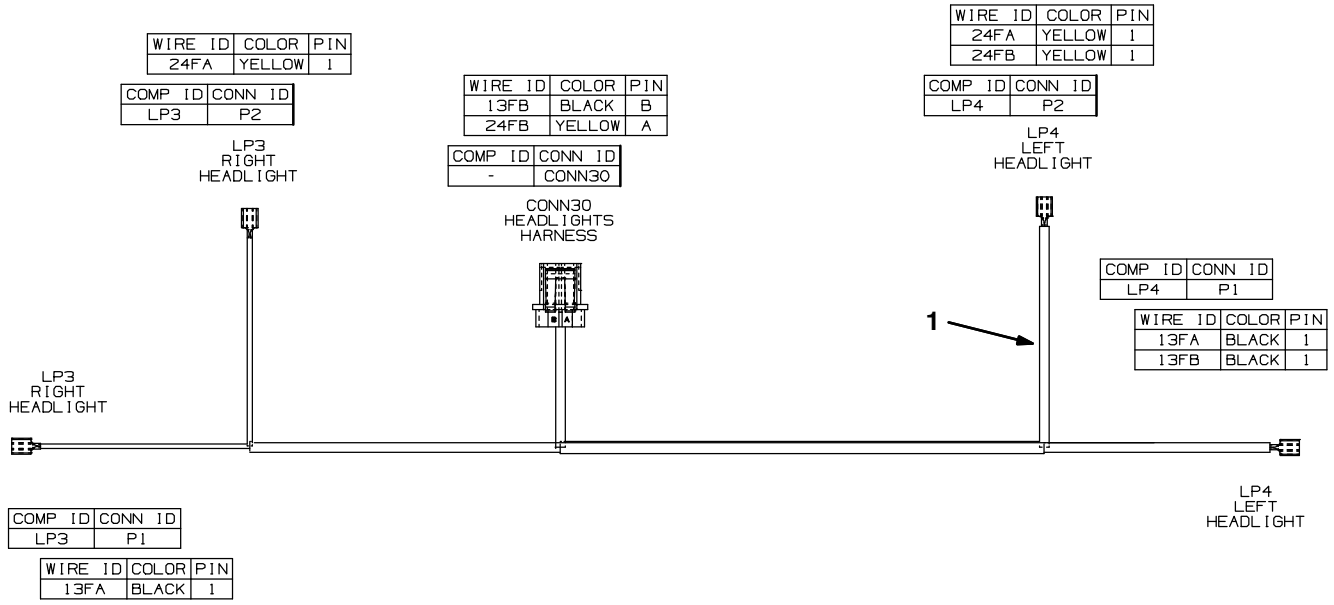

Ref.	Part No.	Serial Number	Description	Qty.
1	1024141	(000000–)	Harness, Headlight [M20 And T20]	1

Fig. 100 – Electrical Wire Harness Group, Hopper

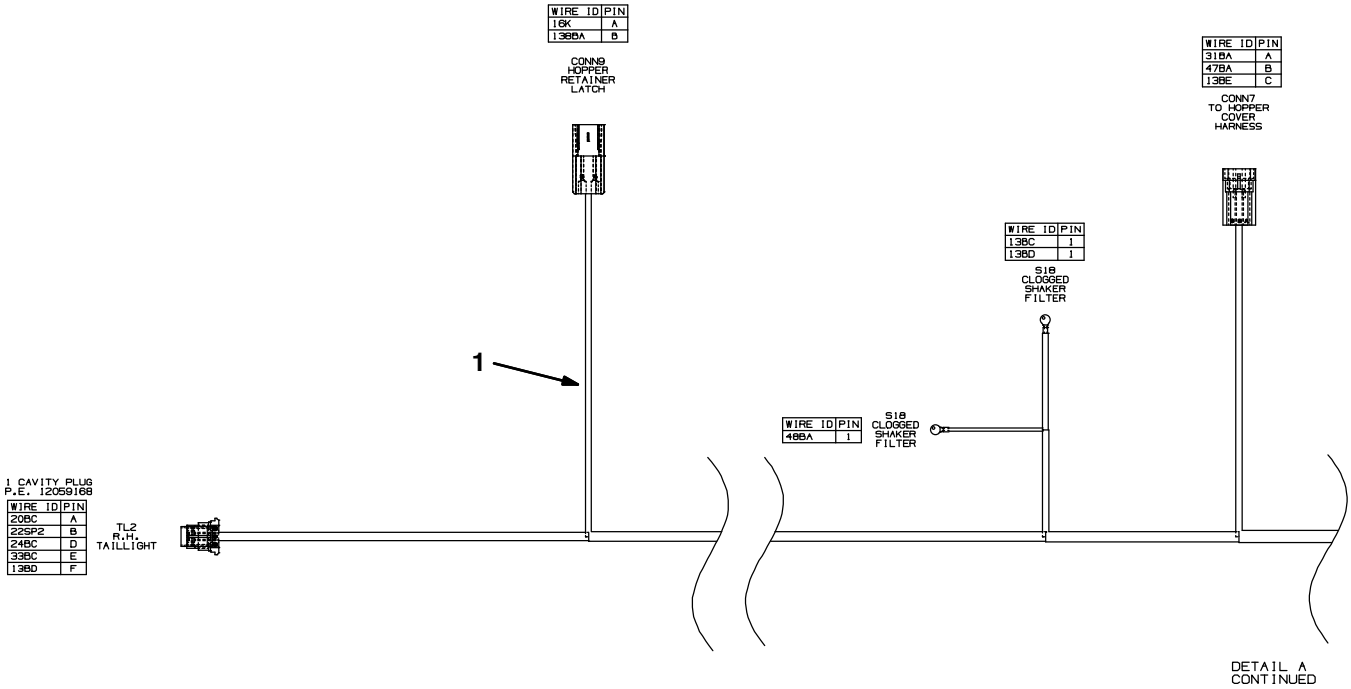

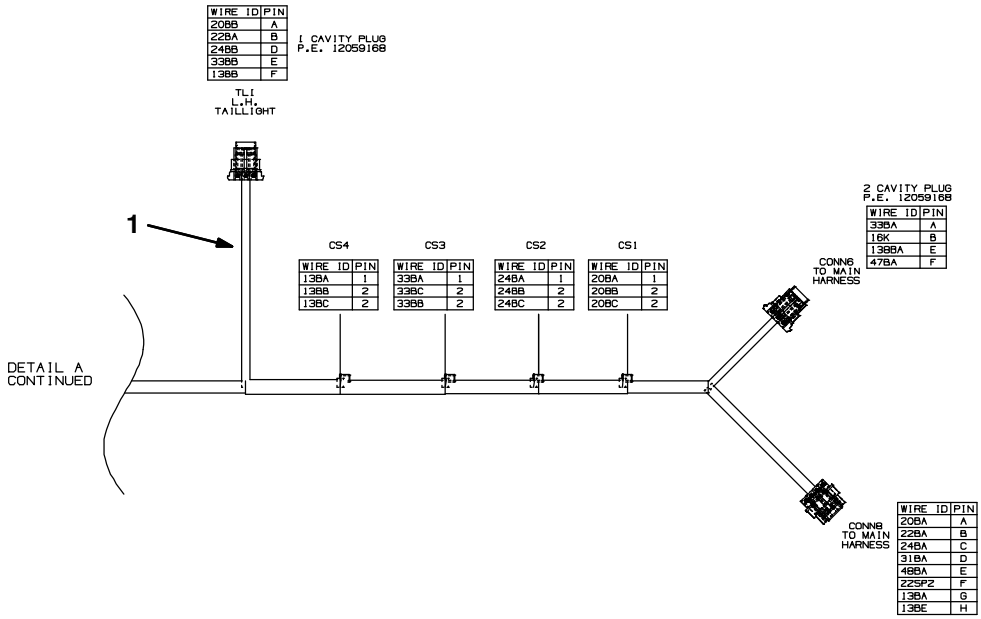

Fig. 100 – Electrical Wire Harness Group, Hopper

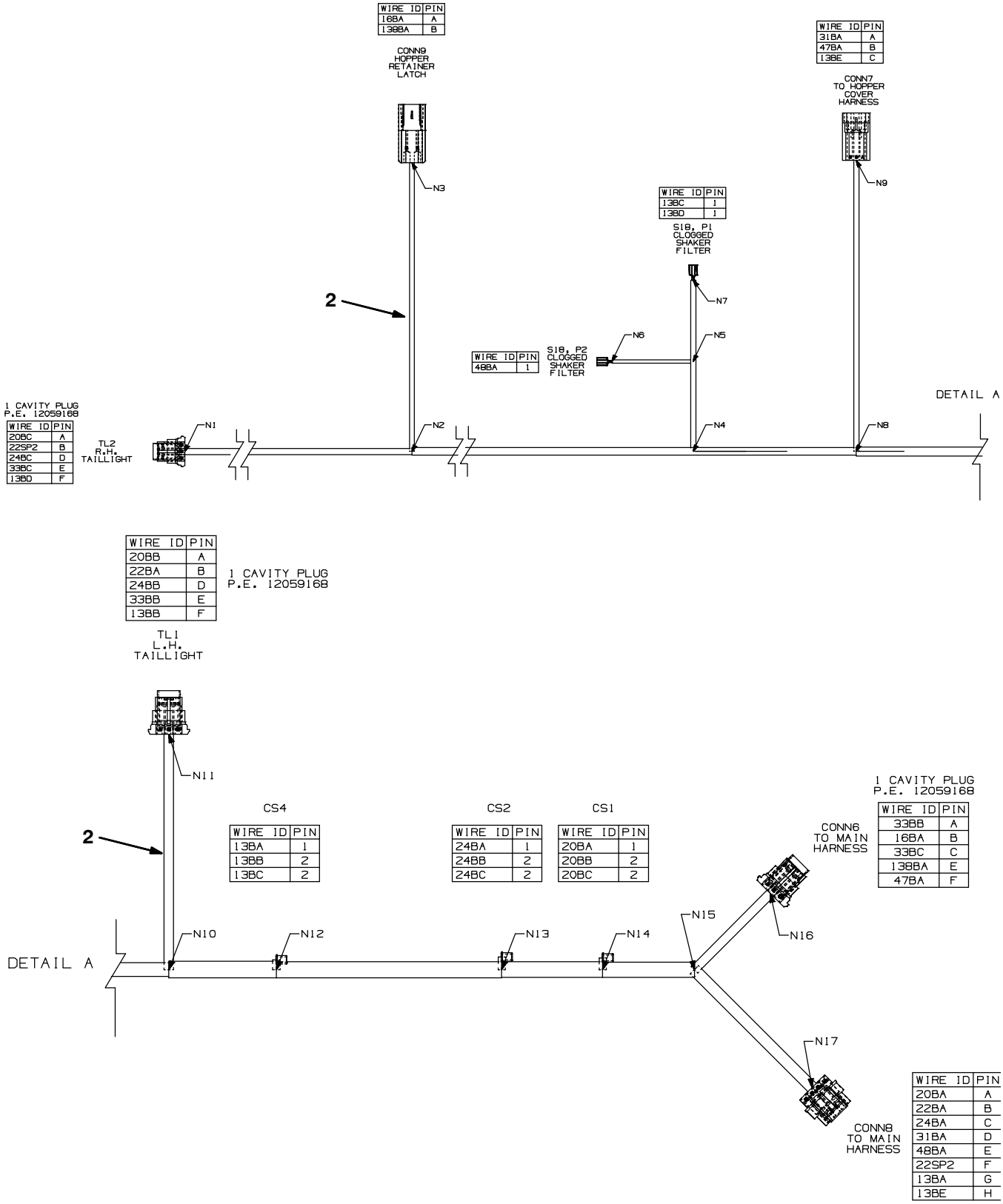

Fig. 100 – Electrical Wire Harness Group, Hopper

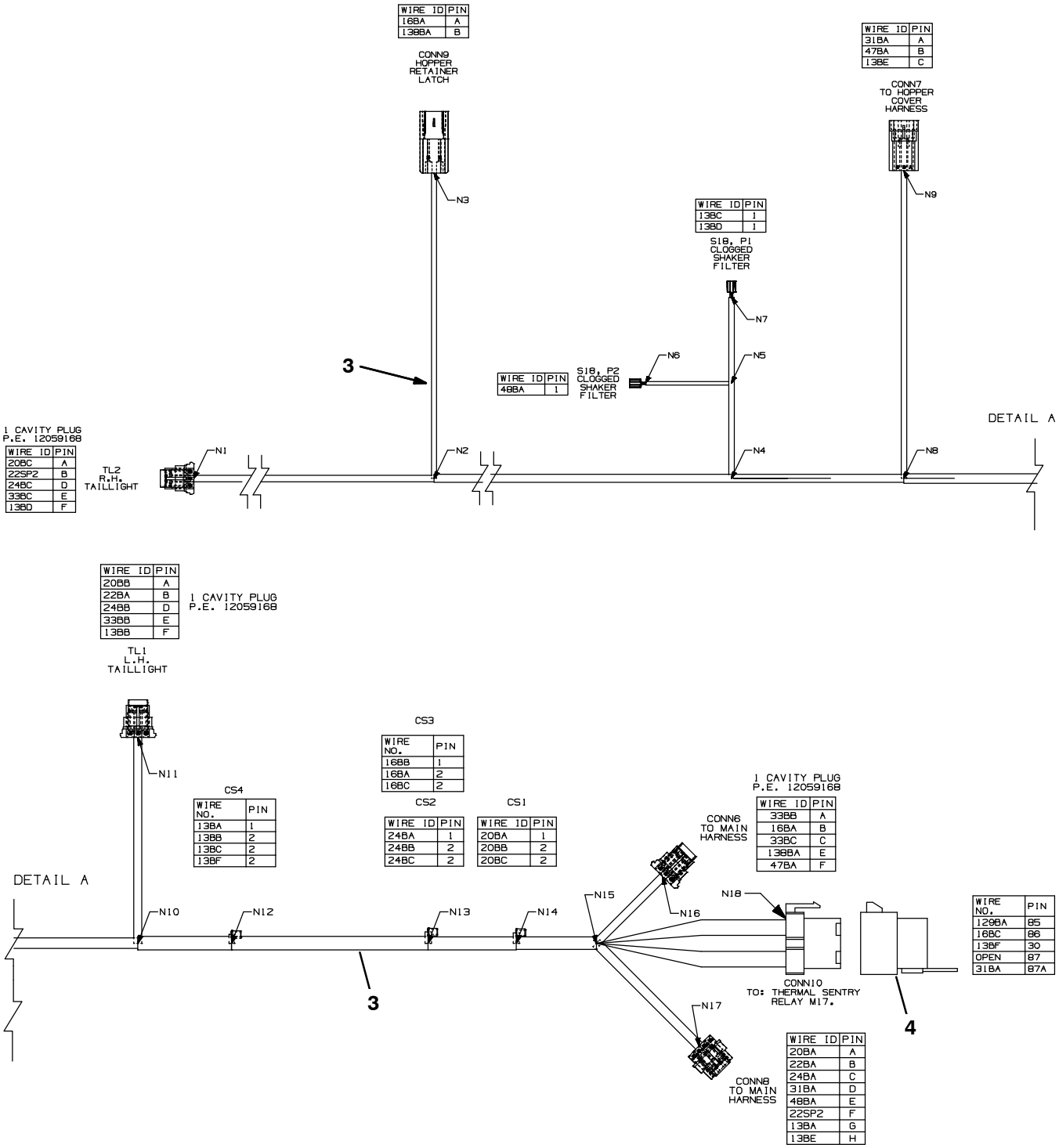

356253 – M20, M30

Ref.	Part No.	Serial Number	Description	Qty.
1	1019630	(000000–002273)	Harness, Hppr [M20]	1
2	1033624	(002274–003478)	Harness, Hppr [M20/M30]	1
3	1064371	(003479–)	Harness, Hppr [M20/M30]	1
4	56186	(003479–)	Relay, 12vdc, 040a, Spdt No	1

Fig. 101 – Electrical Wire Harness Group, Hopper Cover

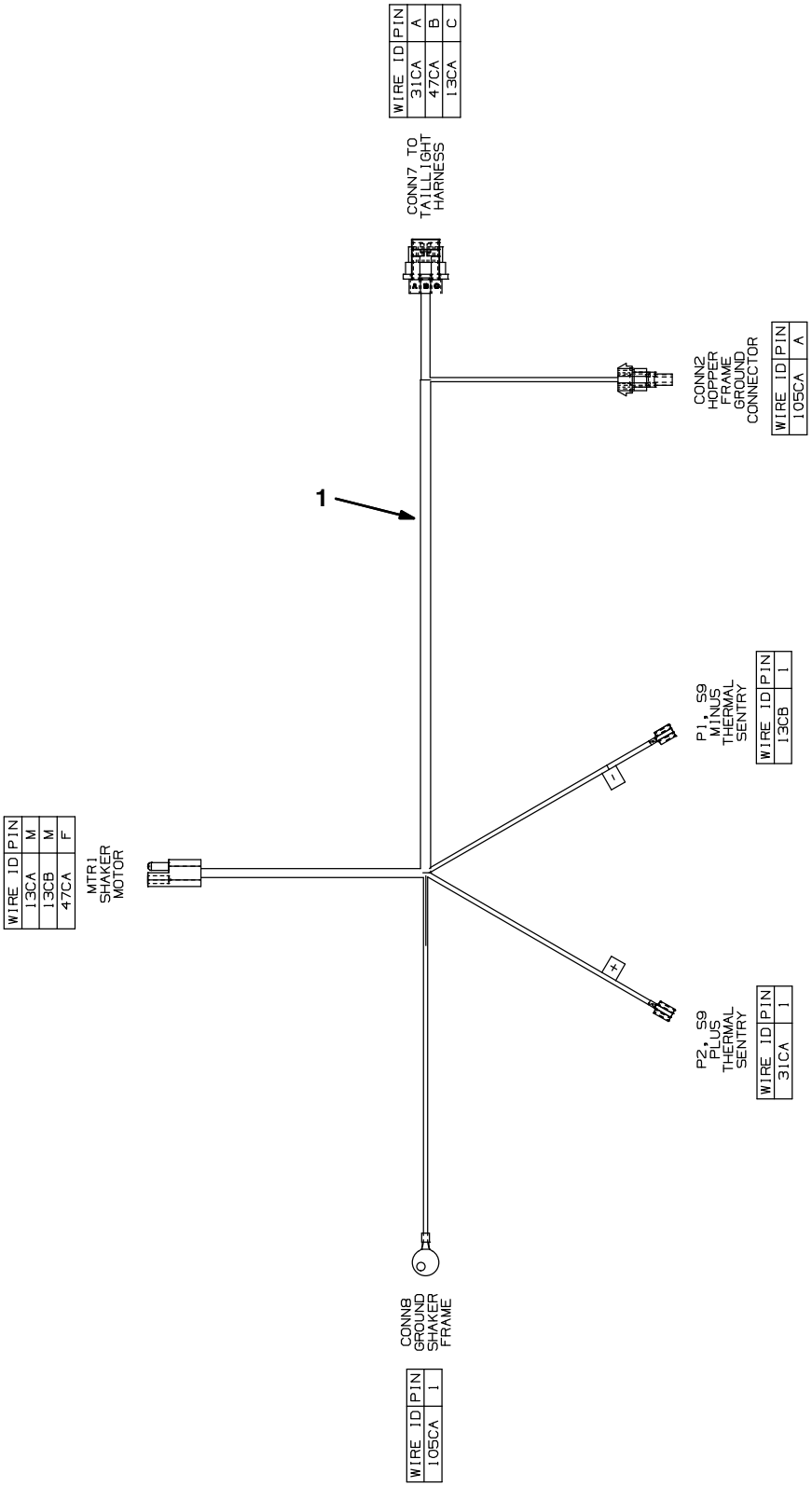

Fig. 101 – Electrical Wire Harness Group, Hopper Cover

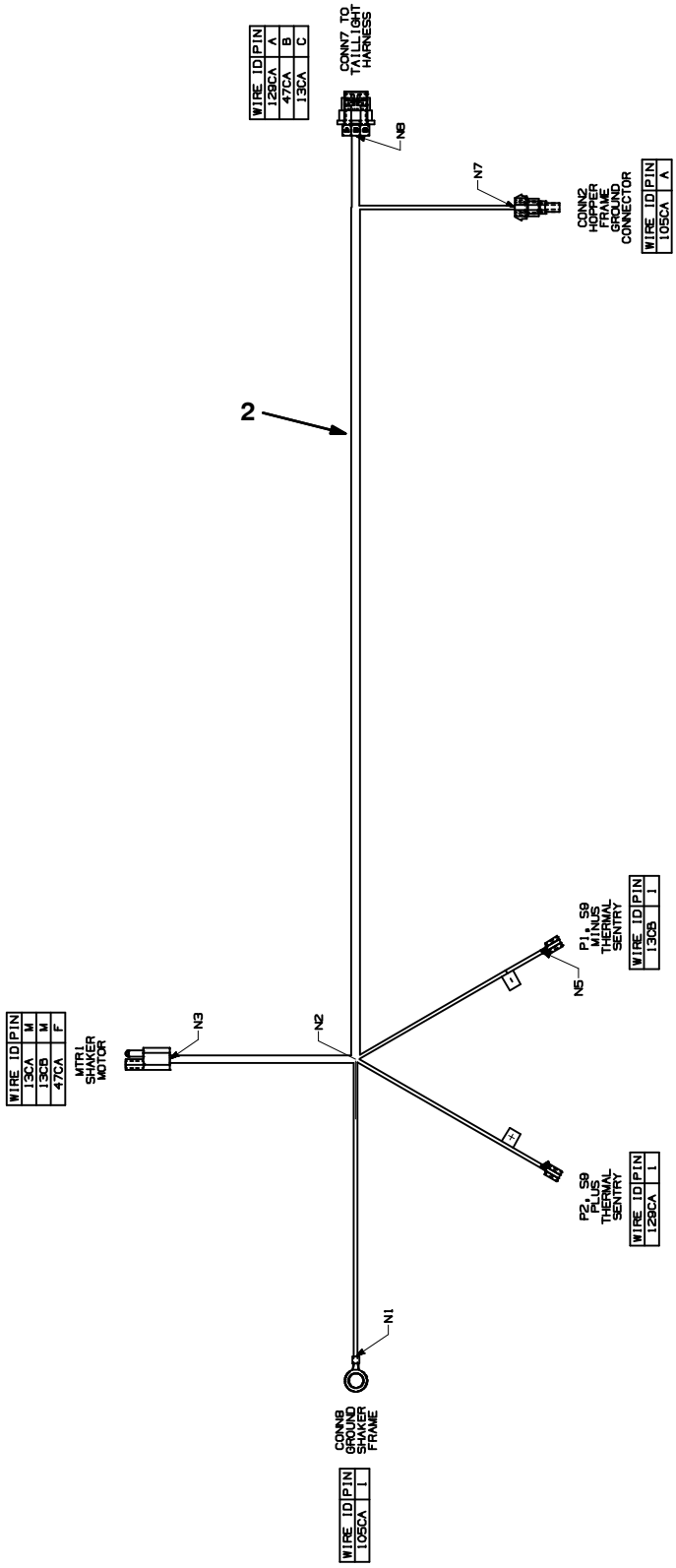

354389–354459

Ref.	Part No.	Serial Number	Description	Qty.
1	1019950	(000000–003478)	Harness, Hppr, Cover [M20]	1
2	1064370	(003479–)	Harness, Hppr, Cover [M20]	1

Fig. 102 – Electrical Wire Harness Group, Gasoline/LPG Engine

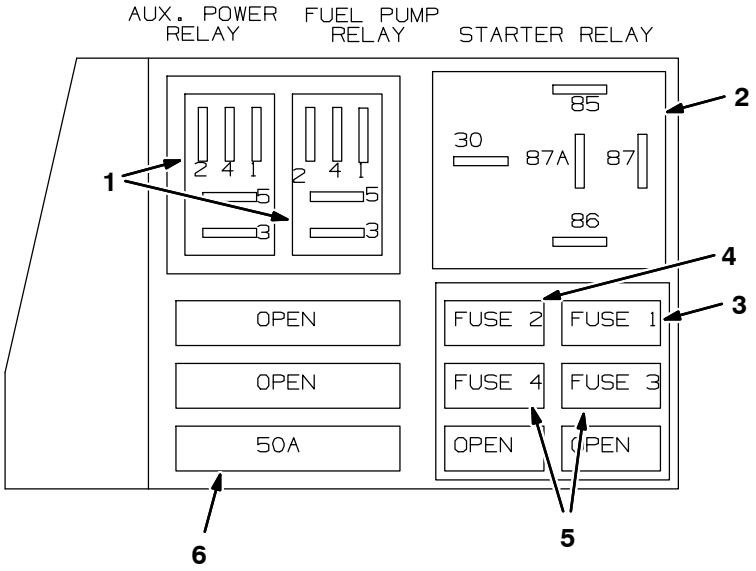

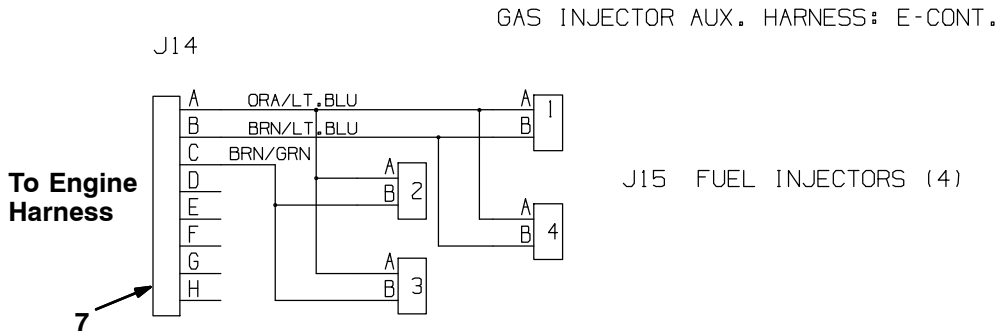

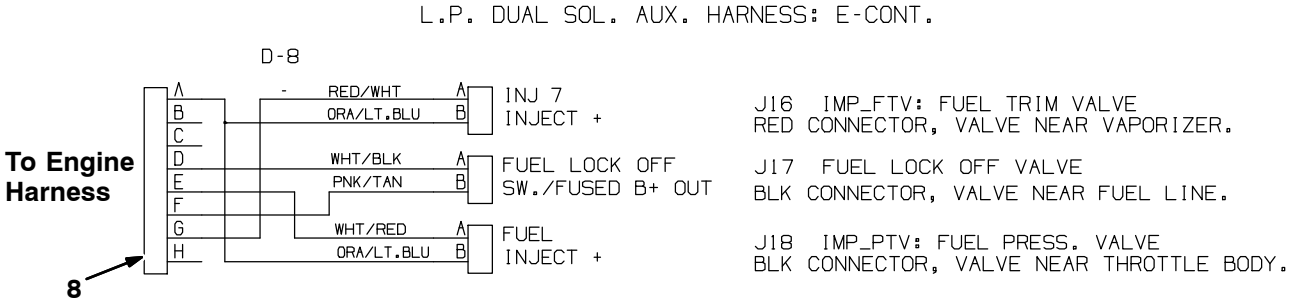

Fig. 102 – Electrical Wire Harness Group, Gasoline/LPG Engine

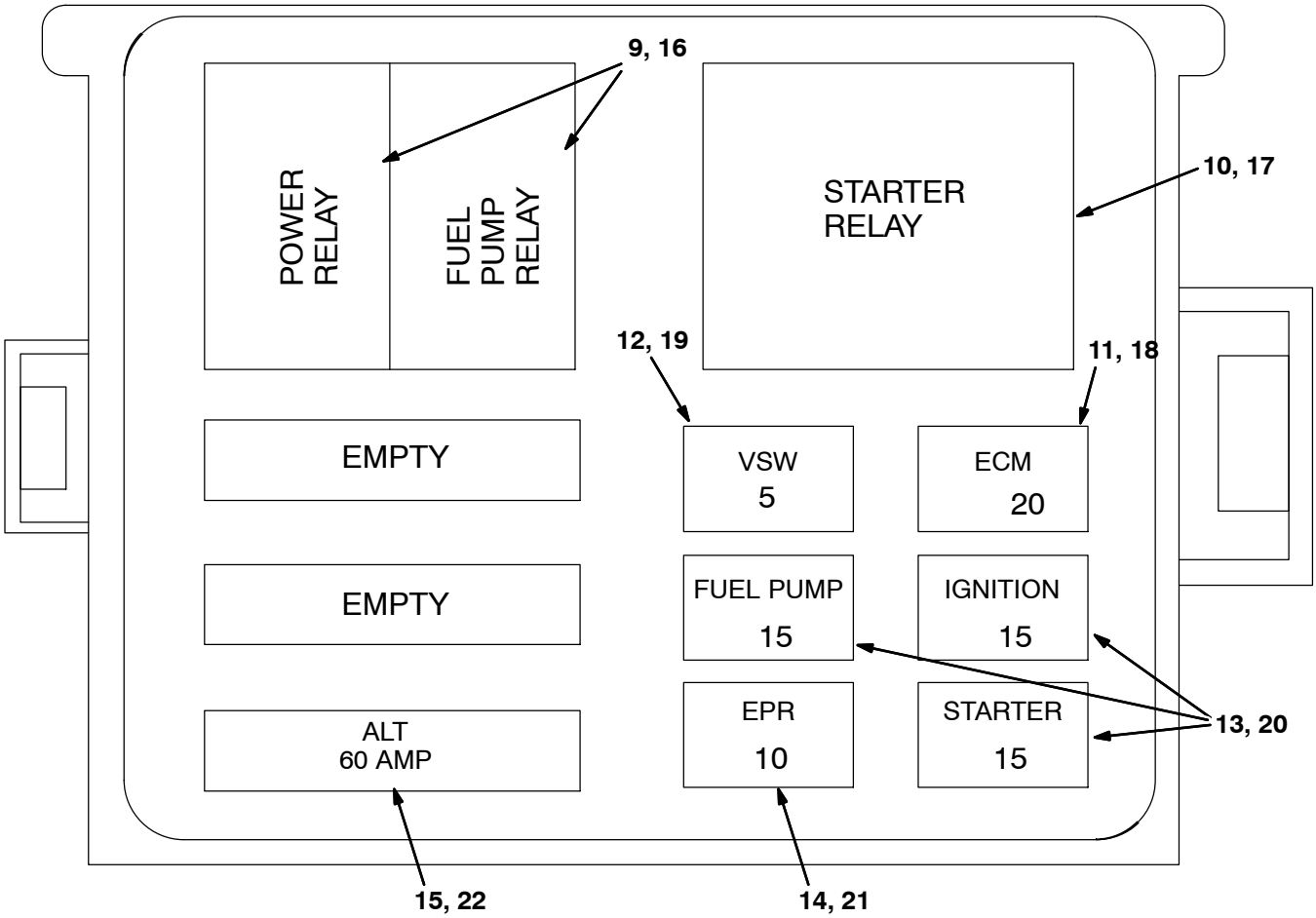

354389–354459

Fig. 102 –Electrical Wire Harness Group, Gasoline/LPG Engine

	Ref.	Part No.	Serial Number	Description	Qty.
▽		1011018	(000000–001999)	Harness, Eng [1.6l, Gm, E–cntrl]	1
▲	1	394916	(000000–001999)	Relay, 12vdc, 20a, Spdt	2
▲	2	57804	(000000–001999)	Relay, 12vdc, 40a, Spdt	1
▲	3	372235	(000000–001999)	Fuse, 5 Amp, [Min–5]	1
▲	4	372237	(000000–001999)	Fuse, 20 Amp, [Min–20]	1
▲	5	372236	(000000–001999)	Fuse, 15 Amp, [Min–15]	2
▲	6	394921	(000000–001999)	Fuse, 50amp	1
	7	1011019	(000000–001999)	Harness, Injector, Gas [1.6l,Gm,E–cntrl]	1
	8	1011020	(000000–001999)	Harness, Injector, Lpg [1.6l,Gm,E–cntrl]	1
▽		384997	(002000–003122)	Harness, Wire, Eng, Gas [Gm 1.6L]	1
▲	9	394916	(002000–003122)	Relay, 12vdc, 20a, Spdt	2
▲	10	57804	(002000–003122)	Relay, 12vdc, 40a, Spdt	1
▲	11	372237	(002000–003122)	Fuse, 20 Amp, [Min–20]	1
▲	12	372235	(002000–003122)	Fuse, 5 Amp, [Min–5]	1
▲	13	372236	(002000–003122)	Fuse, 15 Amp, [Min–15]	2
▲	14	384999	(002000–003122)	Fuse, 10 Amp	1
▲	15	384998	(002000–003122)	Fuse, 60 Amp	1
▽		1063457	(003123–005999)	Harness, Wire, Eng, Gas [Gm 1.6L 10]	1
▲	9	394916	(003123–005999)	Relay, 12vdc, 20a, Spdt	2
▲	10	57804	(003123–005999)	Relay, 12vdc, 40a, Spdt	1
▲	11	372237	(003123–005999)	Fuse, 20 Amp, [Min–20]	1
▲	12	372235	(003123–005999)	Fuse, 5 Amp, [Min–5]	1
▲	13	372236	(003123–005999)	Fuse, 15 Amp, [Min–15]	2
▲	14	384999	(003123–005999)	Fuse, 10 Amp	1
▲	15	384998	(003123–005999)	Fuse, 60 Amp	1
▽		384990	(002000–003122)	Harness, Wire, Eng, Lpg [Gm 1.6l]	1
▲	16	394916	(002000–003122)	Relay, 12vdc, 20a, Spdt	2
▲	17	57804	(002000–003122)	Relay, 12vdc, 40a, Spdt	1
▲	18	372237	(002000–003122)	Fuse, 20 Amp, [Min–20]	1
▲	19	372235	(002000–003122)	Fuse, 5 Amp, [Min–5]	1
▲	20	372236	(002000–003122)	Fuse, 15 Amp, [Min–15]	2
▲	21	384999	(002000–003122)	Fuse, 10 Amp	1
▲	22	384998	(002000–003122)	Fuse, 60 Amp	1
▽		1063456	(003123–005999)	Harness, Wire, Eng, Lpg [Gm 1.6L 10]	1
▲	16	394916	(003123–005999)	Relay, 12vdc, 20a, Spdt	2
▲	17	57804	(003123–005999)	Relay, 12vdc, 40a, Spdt	1
▲	18	372237	(003123–005999)	Fuse, 20 Amp, [Min–20]	1
▲	19	372235	(003123–005999)	Fuse, 5 Amp, [Min–5]	1
▲	20	372236	(003123–005999)	Fuse, 15 Amp, [Min–15]	2
▲	21	384999	(003123–005999)	Fuse, 10 Amp	1
▲	22	384998	(003123–005999)	Fuse, 60 Amp	1
		1071653	(006000–)	Harness, Wire, Eng, Gas [Mit, 2.0L]	1
		1071654	(006000–)	Harness, Wire, Eng, Lpg[Mit, 2.0L]	1

Fig. 103 – Electrical Wire Harness Group, Gasoline/LPG Engine Adapter Harness without Telemetry

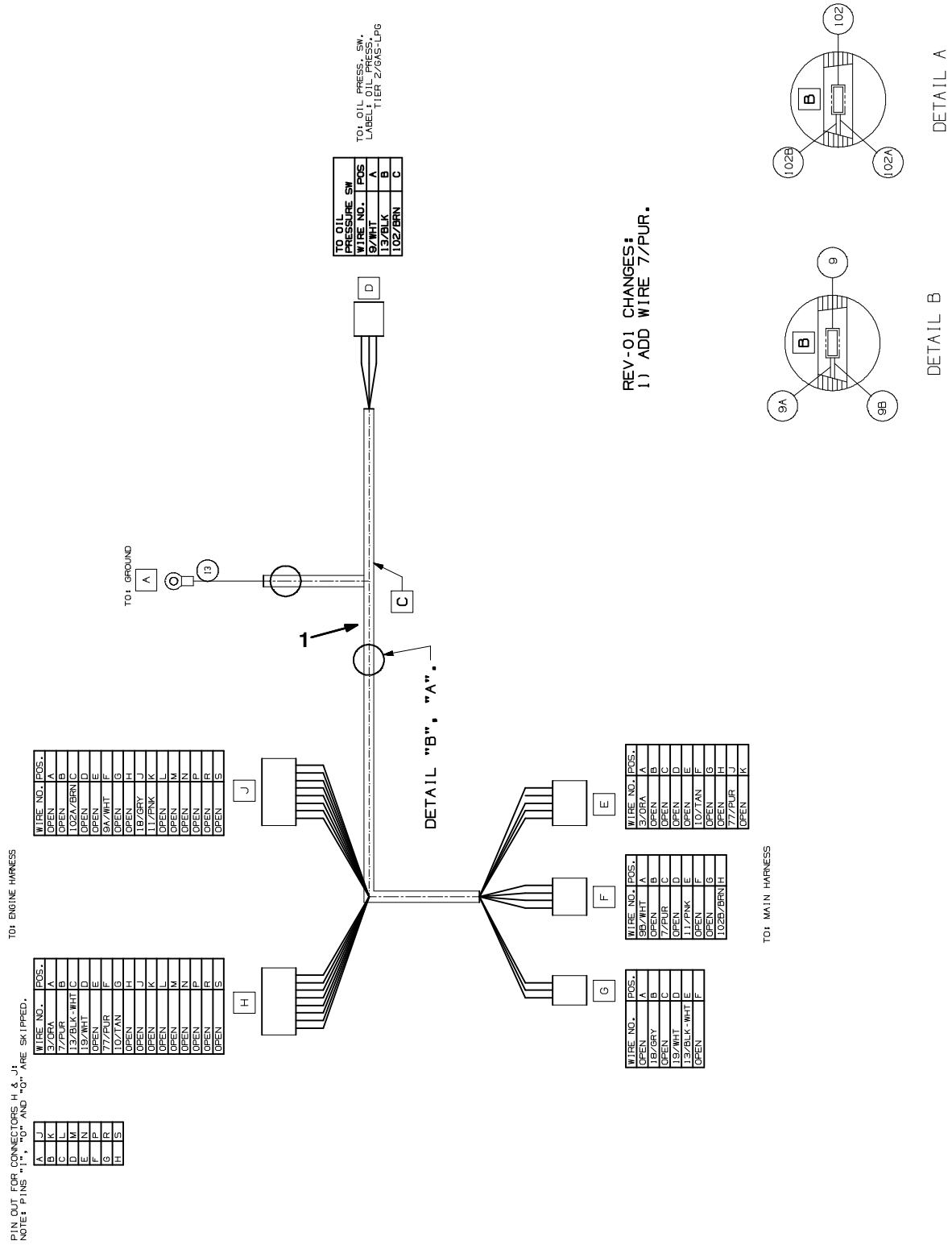

354389–354459

Ref.	Part No.	Serial Number	Description	Qty.
1	1071642	(002000–)	Harness, Wire, Gas/Lpg [Eng Adapt]	1

Fig. 104 – Label Group

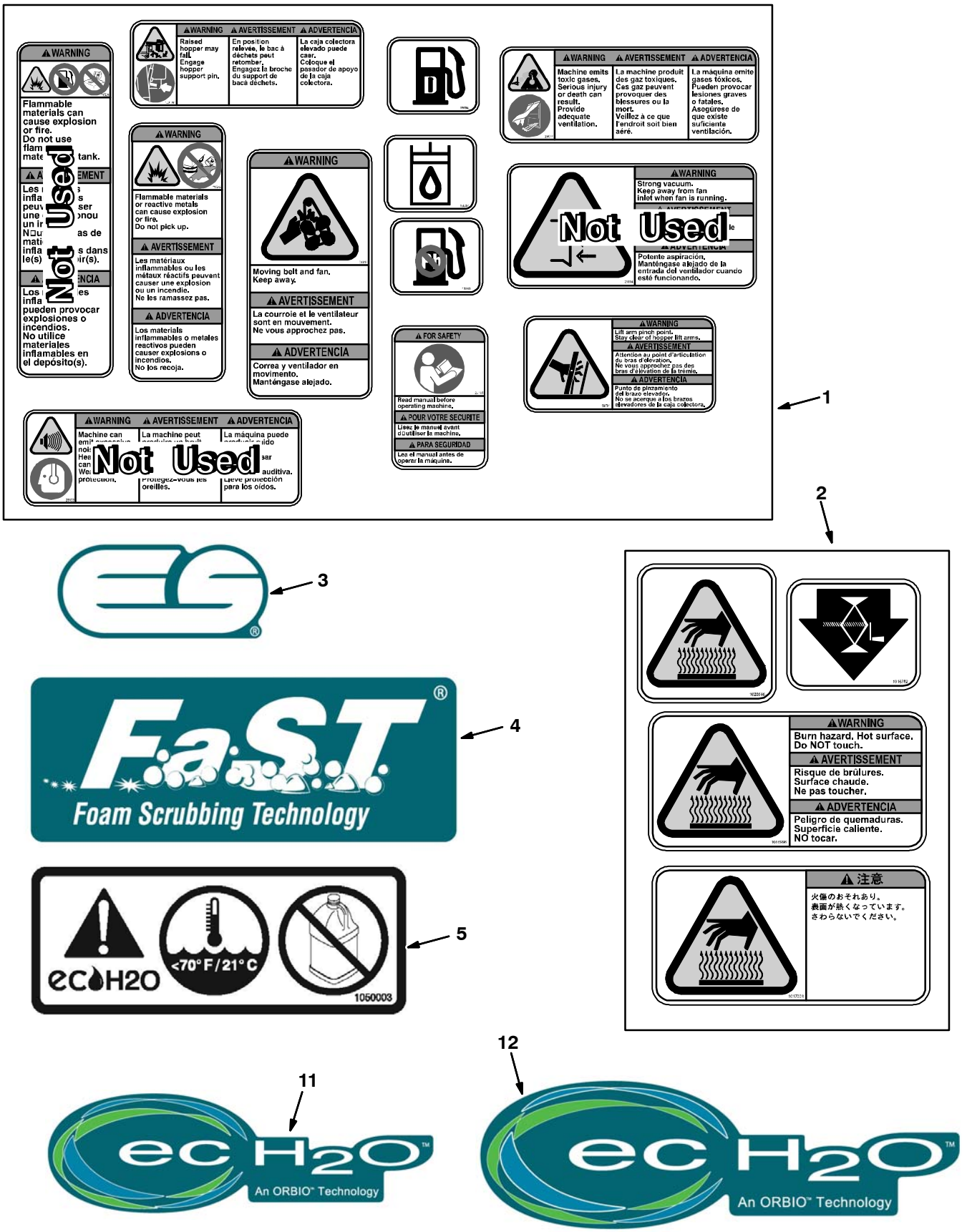

Fig. 104 – Label Group

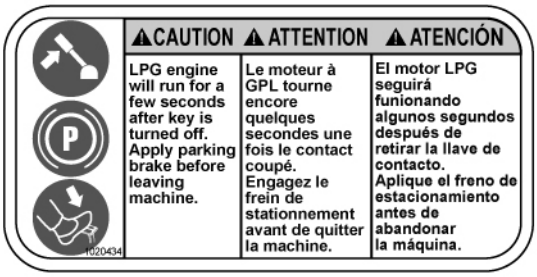

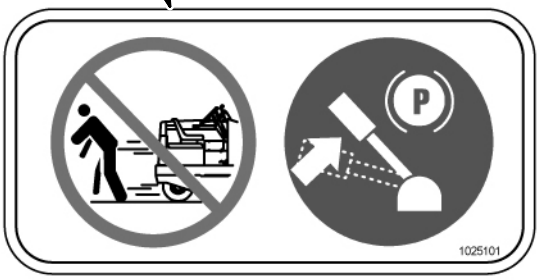

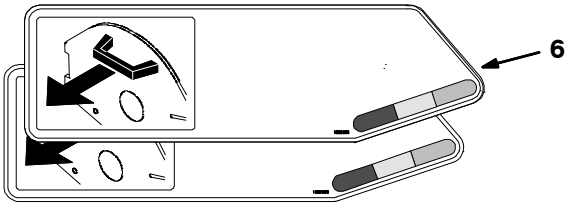

M20 – G/LP

Ref.	Part No.	Serial Number	Description	Qty.
1	77221	(000000–)	Label Set, Info/Hzrd, Swpr / Scrbr	1
2	1017141	(000000–)	Label Set, Hi Temp	1
3	1065343	(000000–)	Label, Logo, 05.75L 2Color [ES]	3
4	1065342	(000000–)	Label, Logo, 07.95L 2Color [FaST]	3
5	1050003	(000000–)	Label [User, Attention, ec–H2O]	2
6	1031017	(000000–)	Label Set, Brush Indicator & Removal	1
7	1032450	(000000–)	Label Set, Info/Hzrd, Swpr / Scrbr, Tj (Japan Only)	1
8	1020434	(000000–)	Label, Caution [Apply Parking Brake]	1
9	1025101	(000000–)	Label, Caution [Apply Parking Brake] (Japan Only)	1
10	1064662	(000000–)	Label, Model, 2Color [M20]	2
11	1062813	(000000–)	Label, Logo, 12.3L 4Color [ec–H2O]	1
12	1064440	(000000–)	Label, Logo, 16.9L 4Color [ec–H2O]	1

SECTION 3

Contents **Page**

Fig. 1 – ES Pump Group 3-2
Fig. 2 – ES Tanks Group 3-4
Fig. 3 – Side Brush Motor Group (000000–003076) 3-6
Fig. 4 – Side Brush Motor Group (003077–) 3-8
Fig. 5 – Side Brush Lift Group 3-10
Fig. 6 – Side Brush Solution Control Group . . . 3-12
Fig. 7 – Side Brush Hydraulic Valve Group 3-14
Fig. 8 – Side Brush Hydraulic Hose Group 3-16
Fig. 9 – FaST Solution Pump Group (000000–002532) 3-18
Fig. 10 – FaST Air Pump and Detergent Group (000000–002532) 3-20
Fig. 11 – FaST Foam Filter Group (000000–002532) 3-22
Fig. 12 – FaST Foam Filter Group, Side Brush (000000–002532) 3-24
Fig. 13 – FaST Wire Harness Group (000000–002532) 3-26
Fig. 14 – FaST Pumps and Detergent Group (002533–) 3-28
Fig. 15 – FaST Solution Supply Group (002533–) 3-30
Fig. 16 – FaST Solution Supply Group with Side Brush (002533–) 3-32
Fig. 17 – FaST Wire Harness Group (002533–) 3-34
Fig. 18 – ec–H20 Solution Pump Group 3-36
Fig. 19 – ec–H20 Solution Pump Supply Group . 3-38
Fig. 20 – ec–H20 Solution Supply Group 3-40
Fig. 21 – ec–H20 Solution Supply Group with Side Brush 3-42
Fig. 22 – ec–H20 Wire Harnesses Group 3-44
Fig. 23 – Backup Alarm Kit 3-47
Fig. 24 – Light Kit, Flashing 3-48
Fig. 25 – Light Kit, Strobe 3-50
Fig. 26 – Light Kit, Flashing Overhead Guard . . 3-52
Fig. 27 – Light Kit, Strobe Overhead Guard 3-53
Fig. 28 – Overhead Guard Kit 3-54
Fig. 29 – Telemetry Group 3-56
Fig. 30 – Electrical Wire Harness Group, Gasoline/LPG Engine Adapter Harness with Telemetry 3-58
Fig. 31 – Vacuum Wand Kit (000000–002406) . . 3-59
Fig. 32 – Vacuum Wand Kit (002407–) . . . 3-60
Fig. 33 – Spray Nozzle Kit 3-62
Fig. 34 – Transport Kit 3-64
Fig. 35 – Squeegee Guard Kit 3-66
Fig. 36 – Engine Radiator Screen Kit (003039–005999) 3-68
Fig. 37 – Fire Extinguisher Kit 3-70
Fig. 38 – Documentation Group 3-71

Fig. 1 – ES Pump Group

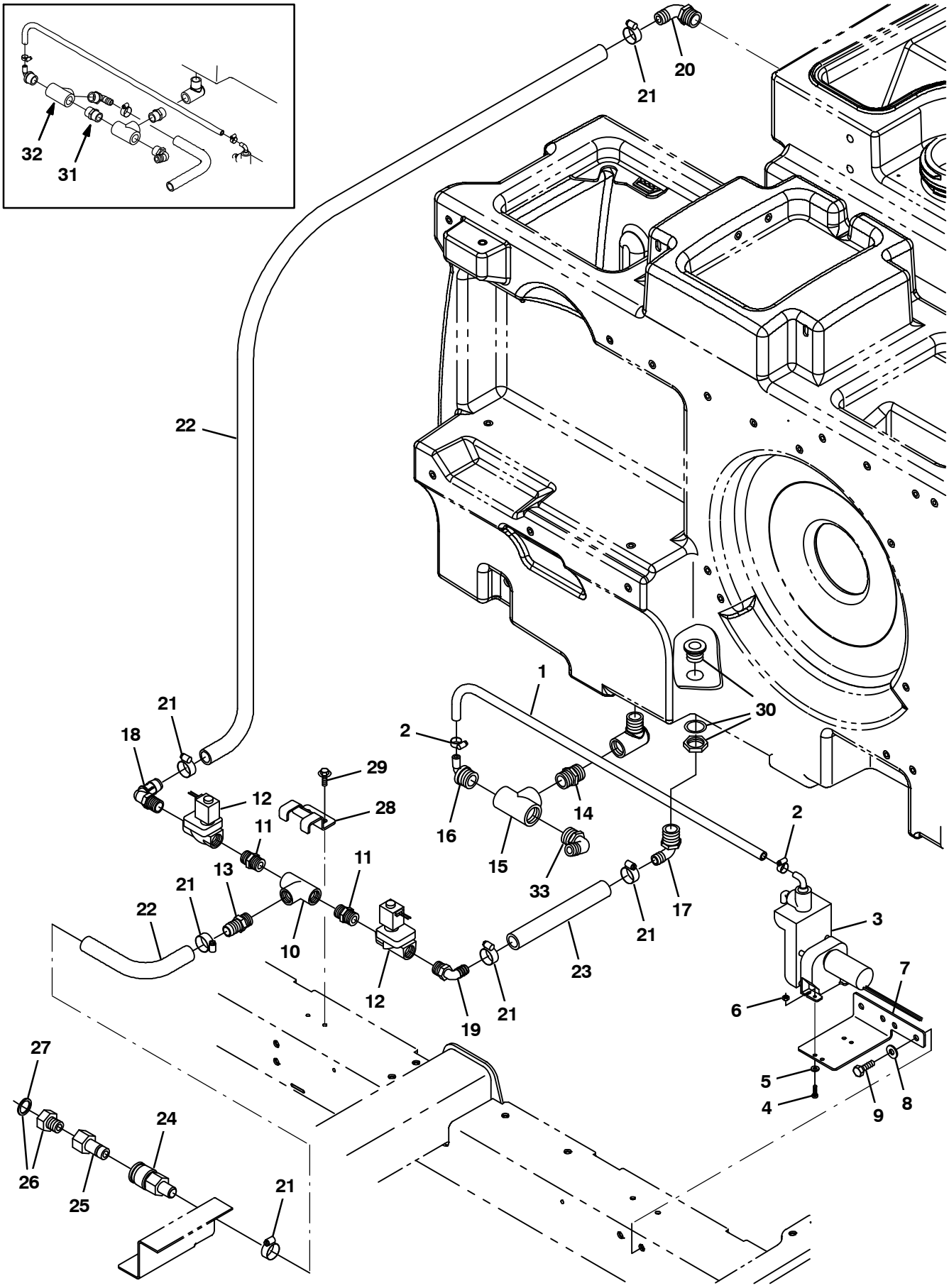

354461

Fig. 1 – ES Pump Group

	Ref.	Part No.	Serial Number	Description	Qty.
	1	41295	(000000–)	Hose, Pvc, Clr, 0.38id 0.56od 48.00l	1
	2	43844	(000000–)	Clamp, Hose, Wormdrive, 0.25–0.62d, .31w	2
	3	73260	(000000–)	Pump, Detgt, 14vdc, 150ml/Min 20psi (See Breakdowns)	1
	4	24265	(000000–)	Screw, Pan, M4 X 0.7 X 16, Ss	2
	5	01683	(000000–)	Washer, Flat, #10, Ss	2
	6	33932	(000000–)	Nut, Hex, Lock, M4 X 0.7, Nl, Ss	2
	7	1021325	(000000–)	Bracket, Mtg, Valve	1
	8	01685	(000000–)	Washer, Flat, 0.31, Ss	2
	9	09740	(000000–)	Screw, Hex, M8 X 1.25 X 20, Ss	2
	10	79497	(000000–)	Fitting, Plstc, Tee, Pf08/Pf08/Pf08	1
	11	86508	(000000–)	Fitting, Plstc, Str, Pm08/Pm08	2
	12	73433	(000000–)	Valve, Water, Solenoid, 12vdc 0.08pf	2
	13	78398	(000000–)	Fitting, Plstc, Str, Bm12/Pm08, Nyl	1
	14	24544	(000000–)	Fitting, Plstc, Str, Pm12/Pm12 1.60l	1
	15	42133A	(000000–)	Fitting, Plstc, Tee, Pf12/Pf12/Pf12	1
	16	79484	(000000–)	Fitting, Plstc, E90, Bm06/Pm12, Nyl	1
	17	73468	(000000–)	Fitting, Plstc, E90, Bm10/Pm12	1
	18	63244–2	(000000–)	Fitting, Plstc, E90, Bm12/Pm08	1
	19	630371	(000000–)	Fitting, Plstc, E90, Bm10/Pm08	1
	20	14877	(000000–)	Fitting, Plstc, E90, Bm12/Pm12	1
	21	63810	(000000–)	Clamp, Hose, Wormdrive, 0.56–1.06d, .56w	6
	22	1015045	(000000–)	Hose, Afmkt, Pvc, Brd 0.75id 08ft	1
	23	369811	(000000–)	Hose, Pvc, Brd, 0.62id 0.88od 09.00l	1
	24	24105	(000000–)	Fitting, Brs, Qdc, Bm12/Qf08	1
	25	33295	(000000–)	Fitting, Brs, Qdc, Pf08 [Parker Bh3f]	1
▽	26	375322	(000000–)	Fitting Kit, Hose, Garden	1
▲	27	01316	(000000–)	Washer, Flat, 0.66b 1.00d .12, Rbr	1
	28	1016837	(000000–)	Bracket, Mtg, Valve	1
	29	361339	(000000–)	Screw, Hex, M6 X 1.0 X 16, Fmg	2
	30	377349	(xxxxxx–)	Fitting, Plstc, Pf12/Pf12, Bh	1
	31	24544	(000000–xxxxxx)	Fitting, Plstc, Str, Pm12/Pm12 1.60l	1
	32	42133A	(000000–xxxxxx)	Fitting, Plstc, Tee, Pf12/Pf12/Pf12	1
	33	14877	(000000–007259)	Fitting, Plstc, E90, Bm12/Pm12	1
	33	73468	(007260–)	Fitting, Plstc, E90, Bm10/Pm12	1

Fig. 2 – ES Tanks Group

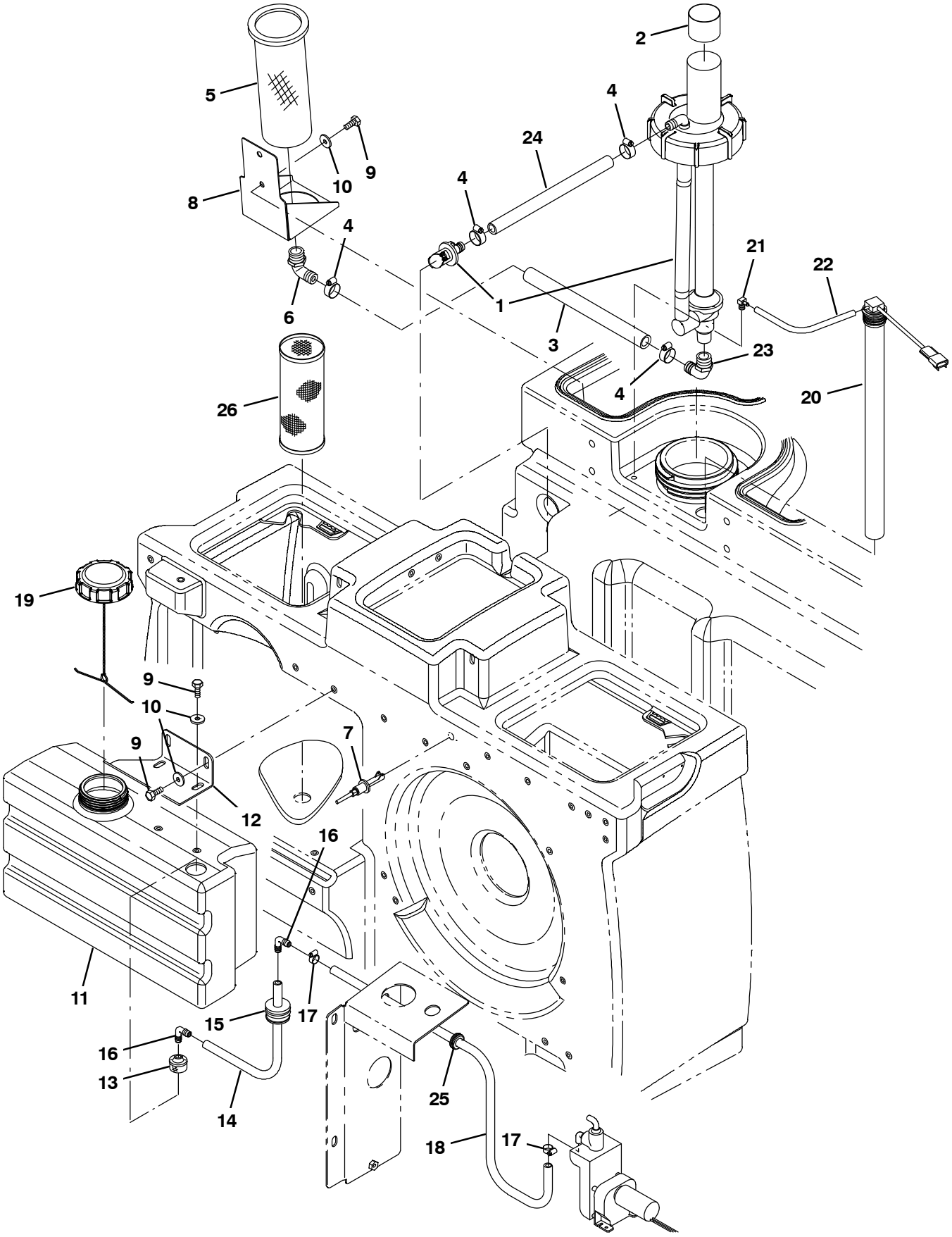

354462

Fig. 2 – ES Tanks Group

Ref.	Part No.	Serial Number	Description	Qty.
1	1021210	(000000–)	Pump Assy, Column, Es (See Breakdowns)	1
2	1028697	(000000–)	Sleeve, Rbr, 3.50b 3.58d 1.8l	1
3	1015048	(000000–)	Hose, Afmkt, Pvc, Brd 0.75id 01ft	1
4	63810	(000000–)	Clamp, Hose, Wormdrive, 0.56–1.06d, .56w	4
5	386652	(000000–)	Strainer, Soltn, 20 Mesh, Cyl 3.5d 9.5l	1
6	24543	(000000–)	Fitting, Plstc, E90, Bm12/Pf12	1
7	385685	(000000–)	Sensor, Level, Liq, 14vdc 01a .62–11	1
8	1019636	(000000–)	Bracket, Mtg, Strainer	1
9	09740	(000000–)	Screw, Hex, M8 X 1.25 X 20, Ss	6
10	1017218	(000000–)	Washer, Flat, 0.32b 1.00d .12, Ss	6
11	1022229	(000000–)	Tank, Detgt, Trimmed	1
12	1025159	(000000–)	Bracket, Mtg, Detgt And Spray Wand	1
13	20952	(000000–)	Screen, Pump	1
14	1014974	(000000–)	Hose, Afmkt, Pvc, Brd 0.38id 02ft	1
15	20944	(000000–)	Grommet, Pye, 0.37id, F/1.5h, .13 Matl	1
16	20951	(000000–)	Fitting, Plstc, E90, Bm06/Bm06	2
17	43844	(000000–)	Clamp, Hose, Wormdrive, 0.25–0.62d, .31w	2
18	41295	(000000–)	Hose, Pvc, Clr, 0.38id 0.56od 48.00l	1
19	1011885	(000000–)	Cap, Tank	1
20	1072877	(000000–)	Switch Assy, Press, 3.0, 17.5l Tube	1
21	32183	(000000–)	Fitting, Brs, E90, Pm02/Bm03	1
22	1031572	(000000–)	Hose, Afmkt, Vacuum, 0.16id, 01ft	1
23	14877	(000000–)	Fitting, Plstc, E90, Bm12/Pm12	1
24	1015033	(000000–)	Hose, Afmkt, Pvc, Brd 0.62Id, 01Ft, Clr	1
25	10632–2	(000000–)	Grommet, Rbr, 0.62id, F/0.9h, .12 Matl	1
26	1039019	(000000–)	Filter, Soltn, 020mesh, Pm12 3.2d 08.0l	1

Fig. 3 – Side Brush Motor Group (000000–003076)

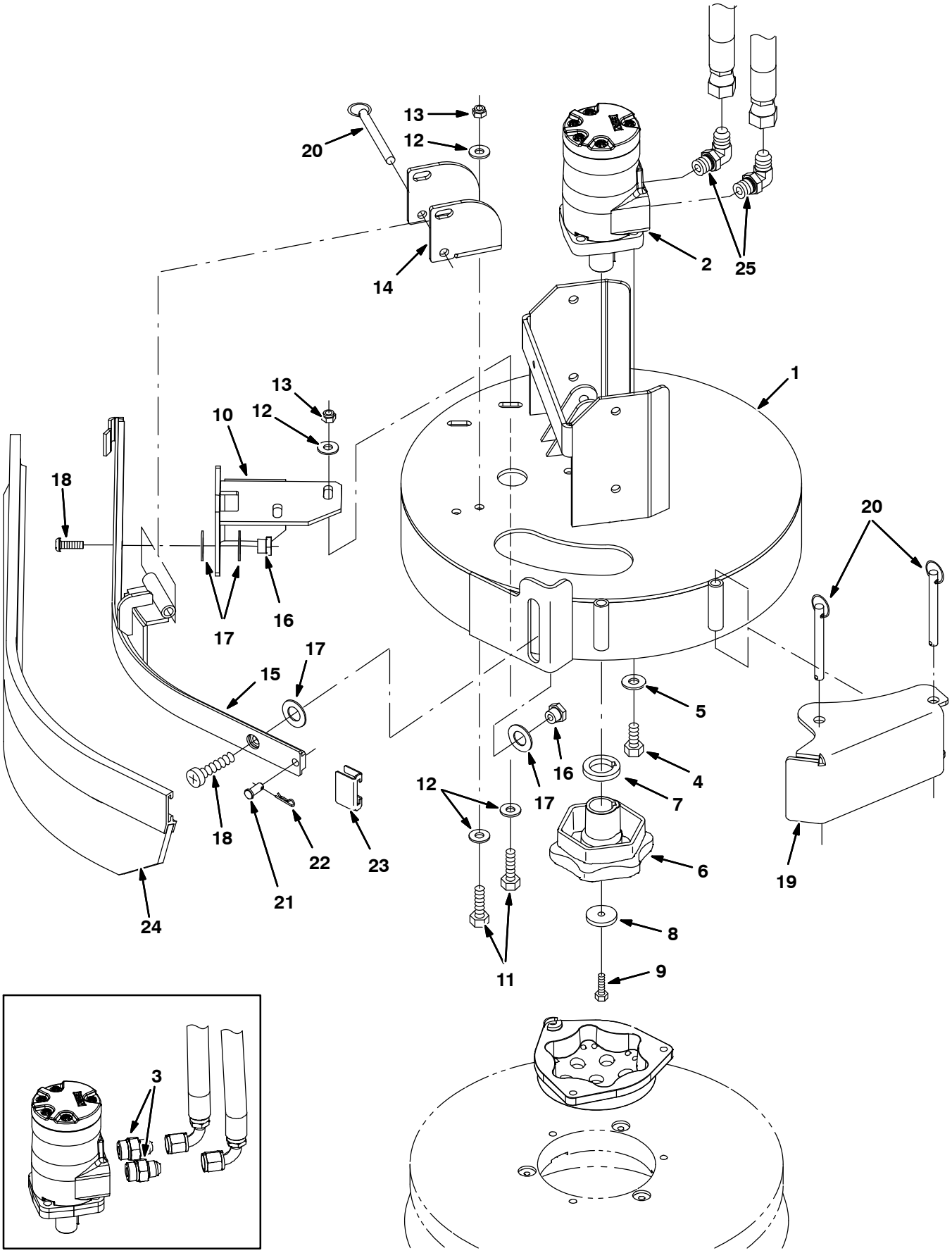

354463

Fig. 3 – Side Brush Motor Group (000000–003076)

Ref.	Part No.	Serial Number	Description	Qty.
1	1021794	(000000–003076)	Bracket Wldt, Mtg, Side Brush	1
2	1029379	(000000–003076)	Motor, Hyd, Gear, Int 08.9 Bi–Dir 2500 (See Breakdowns)	1
3	56692	(000000–001337)	Fitting, Hyd, Str, Jm08/Om10	2
4	01762	(000000–003076)	Screw, Hex, .38–16 X 0.75, Nl	4
5	32492	(000000–003076)	Washer, Flat, 0.38 Std	4
6	1042968	(000000–003076)	Hub, Drive, Brush, Disk, 1.00b [6t]	1
7	25611	(000000–003076)	Spacer, Hub, Keyed	1
8	19191	(000000–003076)	Spacer	1
9	25046	(000000–003076)	Screw, Hex, .25–20 X 1.00, 5	1
10	1022135	(000000–003076)	Bracket, Mtg, Sqge	1
11	09010	(000000–003076)	Screw, Hex, M8 X 1.25 X 25, Ss	4
12	01685	(000000–003076)	Washer, Flat, 0.31, Ss	8
13	08713	(000000–003076)	Nut, Hex, Lock, M8 X 1.25, Nl, Ss	4
14	1022188	(000000–003076)	Bar, Retainer	1
15	1022111	(000000–003076)	Frame Wldt, Sqge, Side Brush	1
16	1022302	(000000–003076)	Nut, T, M8 X 1.25 X 14.5od X 9.5l	2
17	64425	(000000–003076)	Washer, Thrust, 0.61b 1.25d .06, Fgl	4
18	223470	(000000–003076)	Screw, Btn, M8 X 1.25 X 25, Ss	2
19	1022260	(000000–003076)	Bumper Wldt, Brush, Side	1
20	369359	(000000–003076)	Pin, Hitch, .375d X 3.12l, Pl	3
21	46800	(000000–003076)	Pin, Clevis, 0.31d X 0.75l	1
22	08179	(000000–003076)	Pin, Cotter, .094 X 1.00	1
23	86759	(000000–003076)	Retainer, Sqge	1
24	1025005	(000000–003076)	Squeegee Assy, Sba, Linatex	1
24	1027716	(000000–003076)	Squeegee Assy, Sba, Ure	1
25	56821	(001338–003076)	Fitting, Hyd, E90, Jm08/Om10	1

Fig. 4 – Side Brush Motor Group (003077–)

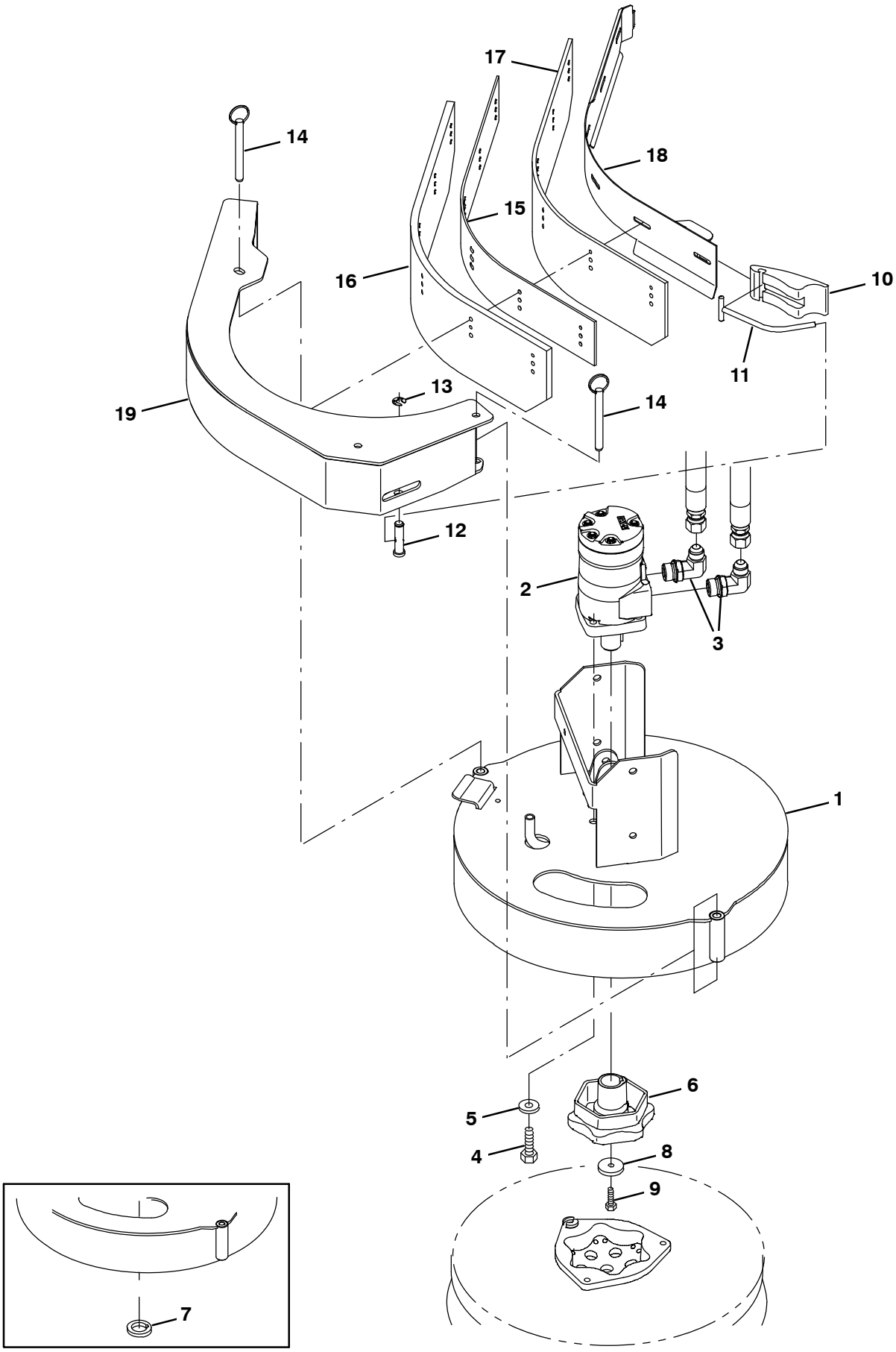

354463

Fig. 4 – Side Brush Motor Group (003077–)

	Ref.	Part No.	Serial Number	Description	Qty.
	1	1047002	(003077–)	Bracket Wldt, Mtg, Side Brush Fixed	1
	2	1029379	(003077–004189)	Motor, Hyd, Gear, Int 08.9 Bi–Dir 2500 (See Breakdowns)	1
▽	2	1068812	(004190–)	Motor, Hyd, Gear, Int 08.9 Bi–Dir 2500	1
▲		22615	(004190–)	Seal Kit, Motor [Cl]	1
	3	56821	(003077–)	Fitting, Hyd, E90, Jm08/Om10	2
	4	01762	(003077–)	Screw, Hex, .38–16 X 0.75, Nl	4
	5	32492	(003077–)	Washer, Flat, 0.38 Std	4
	6	1042968	(003077–)	Hub, Drive, Brush, Disk, 1.00b [6t]	1
	7	25611	(003077–004189)	Spacer, Hub, Keyed	1
	8	19191	(003077–)	Spacer	1
	9	25046	(003077–)	Screw, Hex, .25–20 X 1.00, 5	1
	10	21601	(003077–)	Cam, Front	1
	11	386298	(003077–)	Pin Wldt, Front	1
	12	21603	(003077–)	Pin, Grvd, 0.43d 01.8l [303ss]	1
	13	24555	(003077–)	Ring, Retaining, Ext, 0.38d, [E–Ring]	1
	14	369359	(003077–)	Pin, Hitch, .375d X 3.12l, Pl	2
	15	1046995	(003077–)	Spacer, Sqge, Side Brush, Rbr	1
	16	1046980	(003077–)	Blade, Sqge, Side Brush, Linatex	1
	16	1059091	(003077–)	Blade, Sqge, Side Brush, Urethane	1
	17	1047238	(003077–)	Blade, Sqge, Side Brush, Linatex	1
	17	1059092	(003077–)	Blade, Sqge, Side Brush, Urethane	1
	18	1047060	(003077–)	Plate Wldt, Retainer, Sqge	1
	19	1046976	(003077–)	Bumper Wldt, Brush, Side	1

Fig. 5 – Side Brush Lift Group

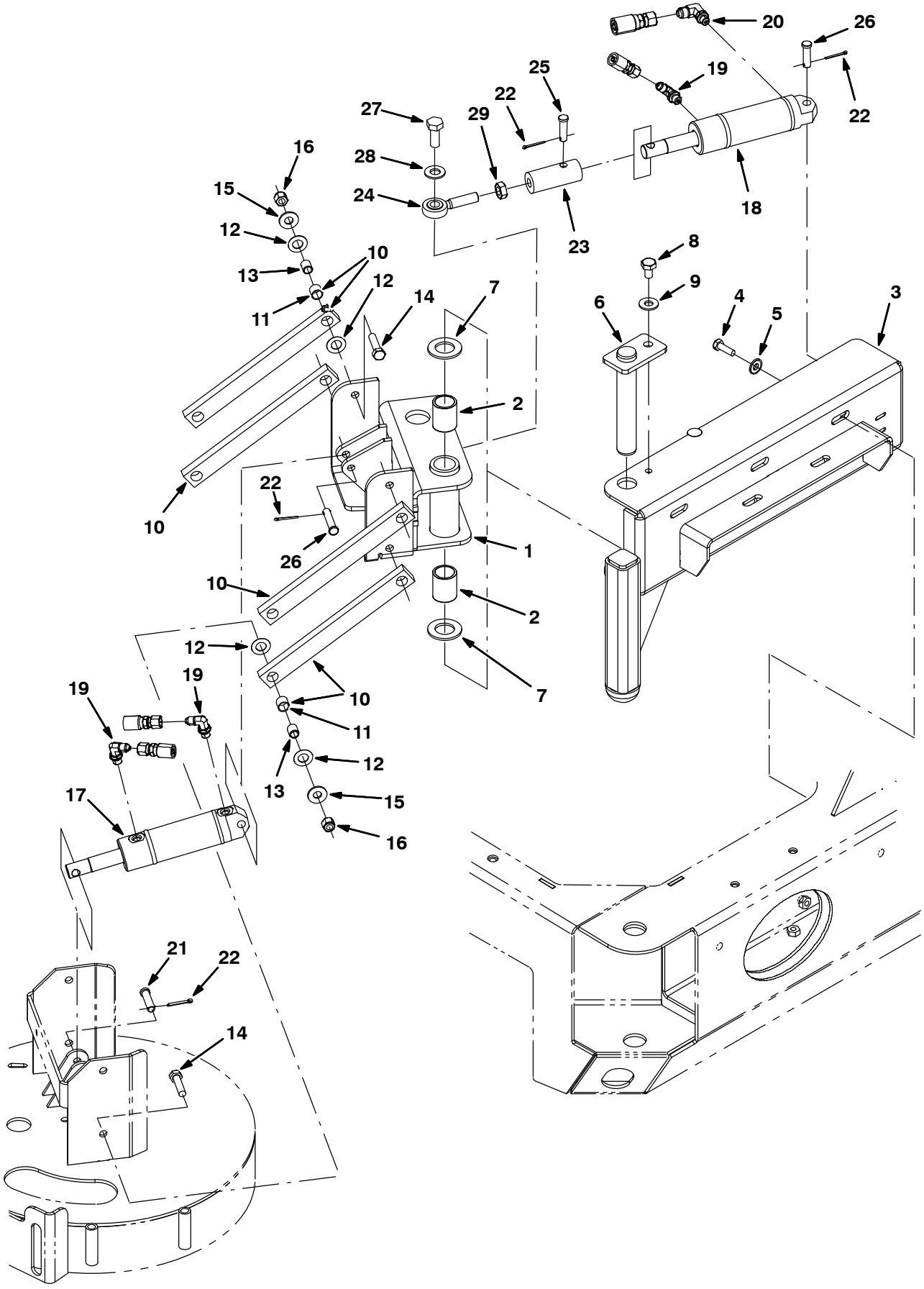

354464

Fig. 5 – Side Brush Lift Group

	Ref.	Part No.	Serial Number	Description	Qty.
	1	1021439	(000000–)	Pivot Wldt, Brush, Side	1
	2	71868	(000000–)	Bushing, Sleeve, 1.00b 1.13d 1.50l, Fgl	2
	3	1021473	(000000–)	Channel Wldt, Pivot	1
	4	09010	(000000–)	Screw, Hex, M8 X 1.25 X 25, Ss	5
	5	41186	(000000–)	Washer, Flat, Belleville, .31	5
	6	1021617	(000000–)	Pin Wldt	1
	7	71869	(000000–)	Washer, Thrust, 1.00b 1.75d 0.13w, Fbr	2
	8	16735	(000000–)	Screw, Hex, M8 X 1.25 X 16, 8.8	1
	9	32491	(000000–)	Washer, Flat, 0.31, Std	1
▽	10	63175–1	(000000–)	Arm, Link	4
▲	11	63233	(000000–)	Bushing, Sleeve, 0.50b 0.59d 0.50l, Bnz	2
	12	59633	(000000–)	Bearing, Thrust, 0.53b 1.00d 0.03w	16
	13	1027926	(000000–)	Sleeve, P/M, 0.37b 0.50d 0.6l [430ss]	8
	14	36845	(000000–)	Screw, Hex, .38–16 X 1.50, Ss	8
	15	01685	(000000–)	Washer, Flat, 0.31, Ss	8
	16	59156	(000000–)	Nut, Hex, Lock, .38–16, Nl, Ss	8
	17	1038137	(000000–)	Cylinder, Hyd, 1.5b 07.8l 02.80strk 2500	1
	18	1038115	(000000–)	Cylinder, Hyd, 1.5b 07.8l 02.75strk 2500	1
	19	77097	(000000–)	Fitting, Hyd, E90, Jm04/Om04	3
	20	77098	(000000–)	Fitting, Hyd, E90, Jm06/Om04	1
	21	29558	(000000–)	Pin, Clevis, 0.37d X 1.50l	1
	22	08179	(000000–)	Pin, Cotter, .094 X 1.00	4
	23	1021564	(000000–)	Adapter, Rod–End, Side Brush	1
	24	71874	(000000–)	Rod–End, .50–20rh Mal 0.50b	1
	25	29557	(000000–)	Pin, Clevis, 0.37d X 1.31l	1
	26	17461	(000000–)	Pin, Clevis, 0.37d X 1.75l	2
	27	41346	(000000–)	Screw, Hex, M12 X 1.75 X 30, 8.8	1
	28	32486	(000000–)	Washer, Flat, 0.50 Sae	1
	29	48985	(000000–)	Nut, Hex, Jam, .50–20	1

Fig. 6 – Side Brush Solution Control Group

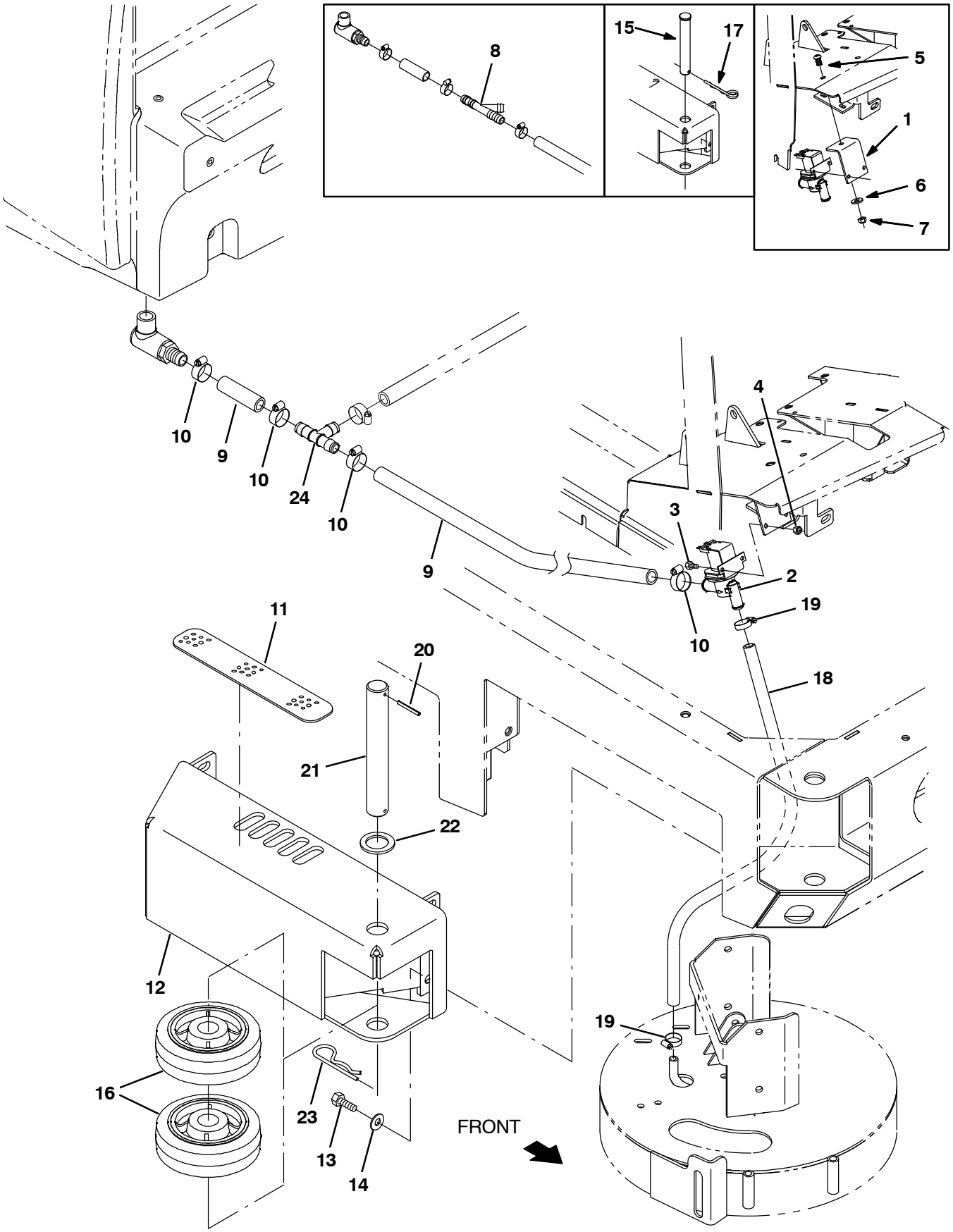

354465

Fig. 6 – Side Brush Solution Control Group

Ref.	Part No.	Serial Number	Description	Qty.
1	1040834	(000000–002241)	Angle, Mtg, Valve	1
2	1022106	(000000–)	Valve Assy, Water, Solenoid, 12vdc	1
3	09738	(000000–)	Screw, Hex, M5 X 0.8 X 12, Ss	2
4	09739	(000000–)	Nut, Hex, Lock, M5 X 0.8, Nl, Ss	2
5	17284	(000000–002241)	Screw, Btn, M8 X 1.25 X 16, Ss	1
6	32491	(000000–002241)	Washer, Flat, 0.31, Std	1
7	08713	(000000–002241)	Nut, Hex, Lock, M8 X 1.25, Nl, Ss	1
8	393255	(000000–007259)	Fitting, Plstc, Tee, Bm12/Bm12/Bm12	1
9	1015045	(000000–007259)	Hose, Afmkt, Pvc, Brd 0.75id 08ft	1
9	1015032	(007260–)	Hose, Afmkt, Pvc, Brd 0.62id 08ft	1
10	63810	(000000–)	Clamp, Hose, Wormdrive, 0.56–1.06d, .56w	4
11	82839	(000000–)	Tread, Non–Skid, 02.2w 11.5l	1
12	1022318	(000000–)	Guard Wldt, Brush, Side	1
13	12317	(000000–)	Screw, Hex, M10 X 1.5 X 30, Ss	4
14	01686	(000000–)	Washer, Flat, 0.44b 1.00d .08, Ss	4
15	9006334	(000000–003062)	Pin Kit, Wheel, Ci [M20/T20/M30]	1
16	1060130	(000000–)	Wheel, 06.0D 2.00W 1.19B, Gray Rbr	2
17	761490	(000000–003062)	Pin, Cotter, Hair, Dbl	1
18	50178	(000000–)	Hose, Pvc, Clr, 0.50id 0.69od 26.00l	1
19	54333	(000000–)	Clamp, Hose, Wormdrive, 0.31–0.88d, .31w	2
20	23146	(003063–)	Pin, Roll, .187d X 1.62l, .187/.192	1
21	1053838	(003063–)	Pin, 30mmd X 215mml	1
22	47719	(003063–)	Washer, Flat, 1.26b 1.88d .13, Stl	1
23	34411	(003063–)	Pin, Cotter, Hair, 1.00d .178 Wir	1
24	1062116	(007260–)	Fitting, Plstc, Tee, Bm10/Bm10/Bm10, Nyl	1

Fig. 7 – Side Brush Hydraulic Valve Group

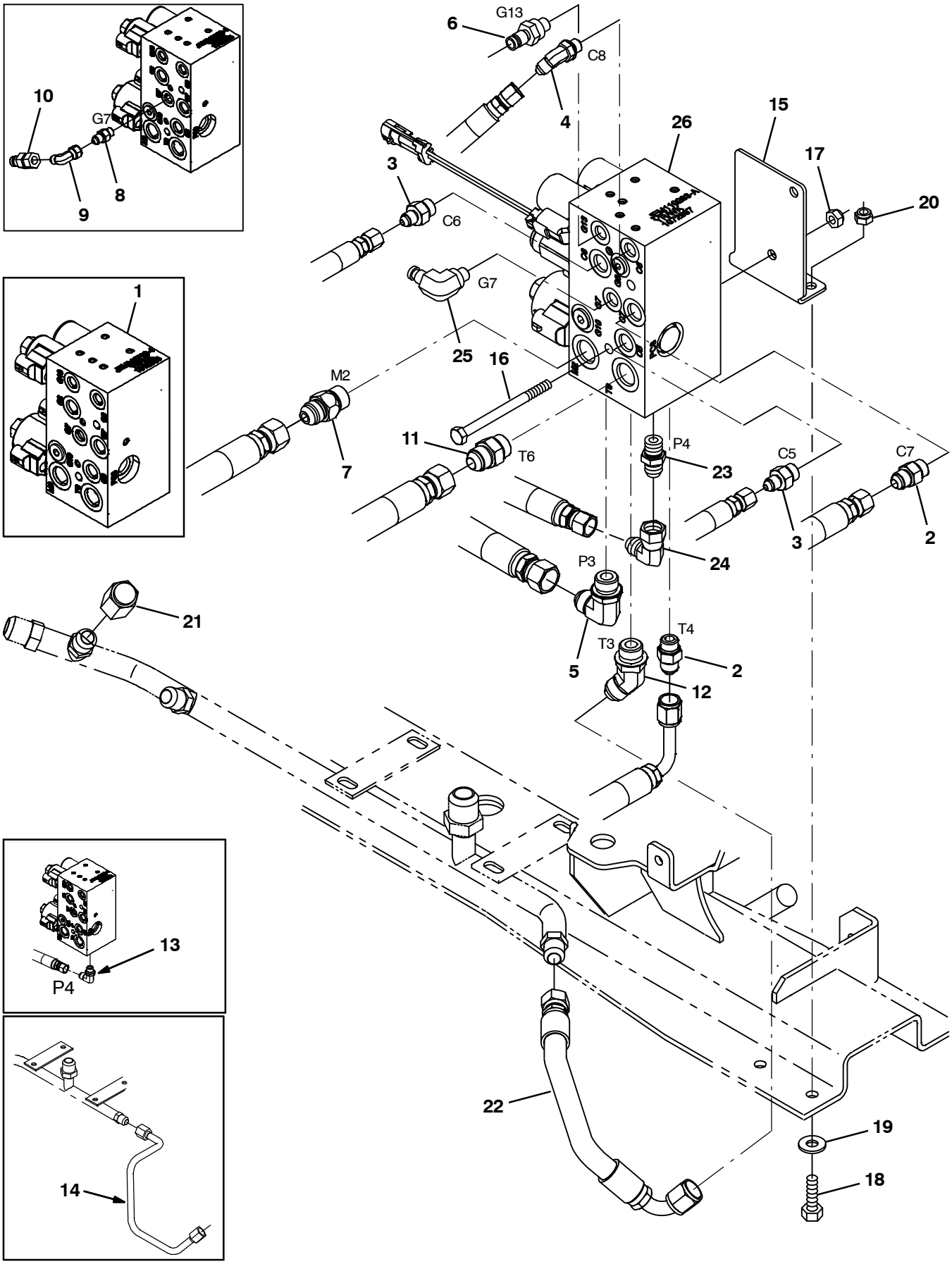

354466

Fig. 7 – Side Brush Hydraulic Valve Group

Ref.	Part No.	Serial Number	Description	Qty.
1	1018938	(000000–002015)	Valve, Cntrl, Hyd [M20 And T20] (See Breakdowns)	1
1	1037805	(002016–006286)	Valve, Hyd, Solenoid 12vdc 3000psi (See Breakdowns)	1
2	56690	(000000–)	Fitting, Hyd, Str, Jm06/Om06	2
3	55685	(000000–)	Fitting, Hyd, Str, Jm04/Om06	2
4	34359	(000000–)	Fitting, Hyd, E45, Jm04/Om04	1
5	44868	(000000–)	Fitting, Hyd, E90, Jm08/Om08	1
6	395973	(000000–)	Fitting, Hyd, Str, Om04/Qm04	1
7	1026119	(000000–)	Valve, Hyd, Check, Jm08/Om08 5000psi	1
8	55586	(000000–002951)	Fitting, Hyd, Str, Jm04/Om04	1
9	39210	(000000–002951)	Fitting, Hyd, E90, Jf04/Jm04	1
10	396476	(000000–002951)	Fitting, Hyd, Str, Jf04/Qm04	1
11	44869	(000000–)	Fitting, Hyd, Str, Jm08/Om08	1
12	42226	(000000–)	Fitting, Hyd, E45, Jm08/Om08	1
13	56820	(000000–002015)	Fitting, Hyd, E90, Jm06/Om06	1
14	1025405	(000000–001357)	Tube, Hyd, 08 Jf08/Jf08	1
15	1045272	(000000–)	Bracket, Valve, Sba [M20 And T20]	1
16	364441	(000000–)	Screw, Hex, M8 X 1.25 X 110, Ss	2
17	08709	(000000–)	Nut, Hex, Lock, M8 X 1.25, Nl	2
18	09010	(000000–)	Screw, Hex, M8 X 1.25 X 25, Ss	2
19	32491	(000000–)	Washer, Flat, 0.31, Std	2
20	08713	(000000–)	Nut, Hex, Lock, M8 X 1.25, Nl, Ss	2
21	60090	(000000–)	Fitting, Hyd, Cap, Jf08	1
22	1037011	(001358–)	Hose, Hyd, Tc08, Jf08str/Jf08e90, 012.0	1
23	56690	(002016–)	Fitting, Hyd, Str, Jm06/Om06	1
24	47504	(002016–)	Fitting, Hyd, E90, Jf06/Jm06	1
25	395974	(002952–)	Fitting, Hyd, E90, Om04/Qm04	1
26	1072997	(006287–)	Valve, Cntrl, Hyd, Solenoid, 03/16gpm (See Breakdowns)	1

Fig. 8 – Side Brush Hydraulic Hose Group

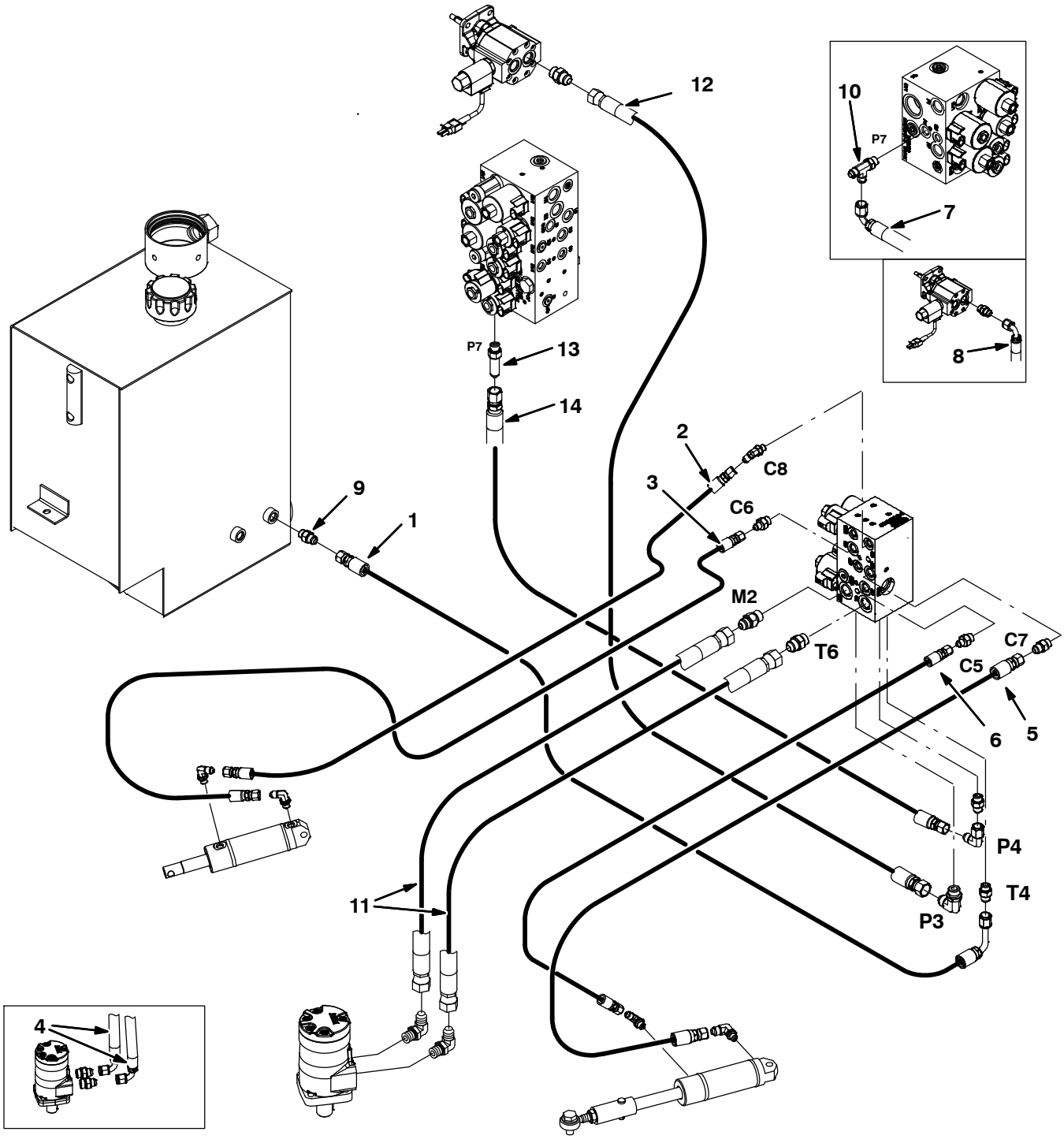

354467

Fig. 8 – Side Brush Hydraulic Hose Group

Ref.	Part No.	Serial Number	Description	Qty.
1	361047	(000000–)	Hose, Hyd, Med06, Jf06e90l/Jf06str,038.0	1
2	1023485	(000000–)	Hose, Hyd, Tc06, Jf06str/Jf06str, 033.0	1
3	1025990	(000000–)	Hose, Hyd, Tc04, Jf04str /Jf04str, 39.0	1
4	1023486	(000000–001337)	Hose, Hyd, Tc08, Jf08e90/Jf08str, 034.0	2
5	1025991	(000000–)	Hose, Hyd, Tc06, Jf06str /Jf06str, 23.0	1
6	1025992	(000000–)	Hose, Hyd, Tc04, Jf04str /Jf04str, 20.0	1
7	1025445	(000000–002699)	Hose, Hyd, Tc06, Jf06str /Jf06e90, 74.0	1
8	365004	(000000–001337)	Hose, Hyd, Tc08, Jf08e90/Jf08str, 056.0	1
9	56690	(000000–)	Fitting, Hyd, Str, Jm06/Om06	1
10	76316	(000000–002699)	Fitting, Hyd, Tee, Jm06/Jm06/Om06, Run	1
11	1036965	(001338–)	Hose, Hyd, Tc08, Jf08str/Jf08str, 034.0	1
12	1036944	(001338–005999)	Hose, Hyd, Tc08, Jf08str/Jf08str, 056.0	1
12	1036946	(006000–)	Hose, Hyd, Tc08, Jf08str/Jf08str, 084.0	1
13	59577	(002700–)	Fitting, Hyd, Str, Jm06/Om06, Long	1
14	377236	(002700–005999)	Hose, Hyd, Tc06, Jf06Str/Jf06Str, 062.0	1
14	1041389	(006000–)	Hose, Hyd, Tc06, Jf06str/Jf06str, 086.0	1

Fig. 9 – FaST Solution Pump Group (000000–002532)

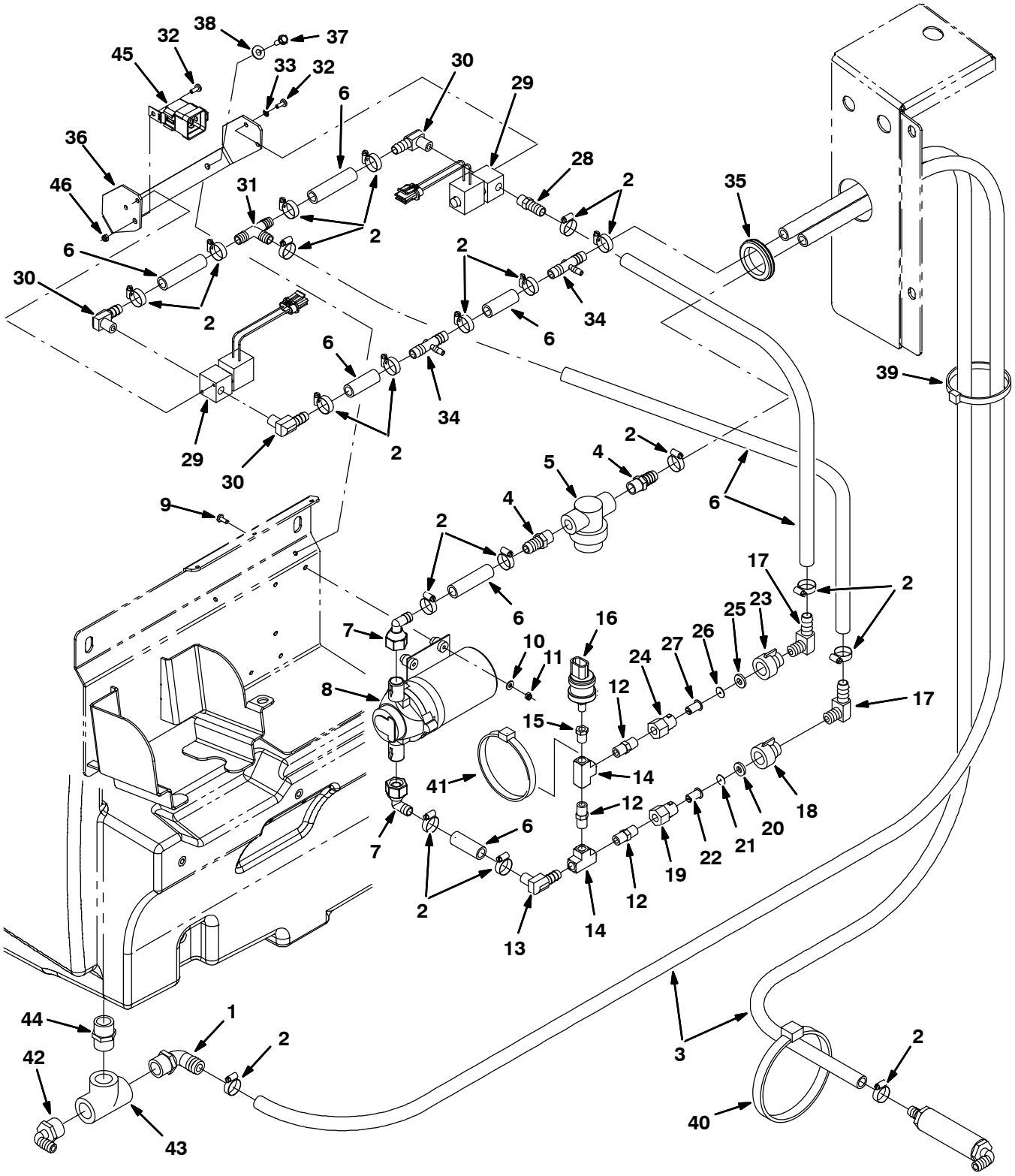

354468

Fig. 9 – FaST Solution Pump Group (000000–002532)

	Ref.	Part No.	Serial Number	Description	Qty.
	1	1005552	(000000–002532)	Fitting, Plstc, E90, Bm08/Pm12, Nyl	1
	2	54333	(000000–002532)	Clamp, Hose, Wormdrive, 0.31–0.88d, .31w	1
	3	1011412	(000000–002532)	Hose, Afmkt, Pvc, Brd 0.50id 08ft	1
	4	64743	(000000–002532)	Fitting, Plstc, Str, Bm08/Pm06	2
	5	1005302	(000000–002532)	Filter, In–Line, Pf06/Pf06, 80 Mesh	1
	6	1006401	(000000–002532)	Hose, Afmkt, Pvc, Brd 0.50id 03ft	1
	7	1018499	(000000–002532)	Fitting, Plstc, E90, Bm08/Pf08s, Swivel	2
	8	1030878	(000000–002532)	Pump, Soltn, Ele, 12vdc [W/O Chk Valve]	1
	9	17185	(000000–002532)	Screw, Pan, M5 X 0.8 X 40, Ss	4
	10	01683	(000000–002532)	Washer, Flat, #10, Ss	4
	11	09739	(000000–002532)	Nut, Hex, Lock, M5 X 0.8, Nl, Ss	4
	12	398468	(000000–002532)	Fitting, Brs, Str, Pm04/Pm04	3
	13	1010836	(000000–002532)	Fitting, Brs, E90, Bm08/Pm04	1
	14	398474	(000000–002532)	Fitting, Brs, Tee, Pf04/Pf04/Pf04	2
	15	150100	(000000–002532)	Fitting, Brs, Str, Pf02/Pm04	1
	16	1028582	(000000–002532)	Switch, Press, 10psi, Spst	1
	17	1010836	(000000–002532)	Fitting, Brs, E90, Bm08/Pm04	2
▽		1030864	(000000–002532)	Fitting Assy, Orifice, 0.070b, Pf04/Pf04	1
▲	18	1005506	(000000–002532)	Fitting, Plstc, Cap, Spray, Pf04	1
▲	19	1005507	(000000–002532)	Fitting, Plstc, Body, Spray, Pf04	1
▲	20	1005508	(000000–002532)	Washer, Flat, 0.34b 0.75d .12 [Viton]	1
▲	21	1018883	(000000–002532)	Plate, Orifice, 0.070id	1
▲	22	1006447	(000000–002532)	Filter, Screen, 50 Mesh .59d .8l Ss	1
▽		1030863	(000000–002532)	Fitting Assy, Orifice, 0.093b, Pf04/Pf04	1
▲	23	1005506	(000000–002532)	Fitting, Plstc, Cap, Spray, Pf04	1
▲	24	1005507	(000000–002532)	Fitting, Plstc, Body, Spray, Pf04	1
▲	25	1005508	(000000–002532)	Washer, Flat, 0.34b 0.75d .12 [Viton]	1
▲	26	1018884	(000000–002532)	Plate, Orifice, 0.093id	1
▲	27	1006447	(000000–002532)	Filter, Screen, 50 Mesh .59d .8l Ss	1
	28	762249	(000000–002532)	Fitting, Brs, Str, Bm08/Pm04	1
	29	1018098	(000000–002532)	Valve, Water, 12vdc, 6.0mm, 04pf	2
	30	1010836	(000000–002532)	Fitting, Brs, E90, Bm08/Pm04	3
	31	63245–1	(000000–002532)	Fitting, Plstc, Tee, Bm08/Bm08/Bm08	1
	32	09200	(000000–002532)	Screw, Pan, M5 X 0.8 X 12, Ss	5
	33	07514	(000000–002532)	Washer, Lock, Int, #10, Ss	4
	34	1010684	(000000–002532)	Fitting, Plstc, Tee, Bm04/Bm08/Bm08, Br	2
	35	10632–19	(000000–002532)	Grommet, Rbr, 2.13id, F/2.5h, .12 Matl	1
	36	1026074	(000000–002532)	Plate, Hsng [FaST]	1
	37	361339	(000000–002532)	Screw, Hex, M6 X 1.0 X 16, Fmg	4
	38	32490	(000000–002532)	Washer, Flat, 0.25 Std	4
	39	49266	(000000–002532)	Tie, Cable, Nyl, 07.3l .19w 1.8 Max D	1
	40	763116	(000000–002532)	Tie, Cable, Nyl, 15.3l . W 4.5 Max D	1
	41	763114	(000000–002532)	Tie, Cable, 11.3l, 2.75d Max	1
	42	14877	(000000–002532)	Fitting, Plstc, E90, Bm12/Pm12	1
	43	42133A	(000000–002532)	Fitting, Plstc, Tee, Pf12/Pf12/Pf12	1
	44	24544	(000000–002532)	Fitting, Plstc, Str, Pm12/Pm12 1.60l	1
	45	56186	(000000–002532)	Relay, 12vdc, 40a, Spdt N/O	1
	46	09739	(000000–002532)	Nut, Hex, Lock, M5 X 0.8, Nl, Ss	1

Fig. 10 – FaST Air Pump and Detergent Group (000000–002532)

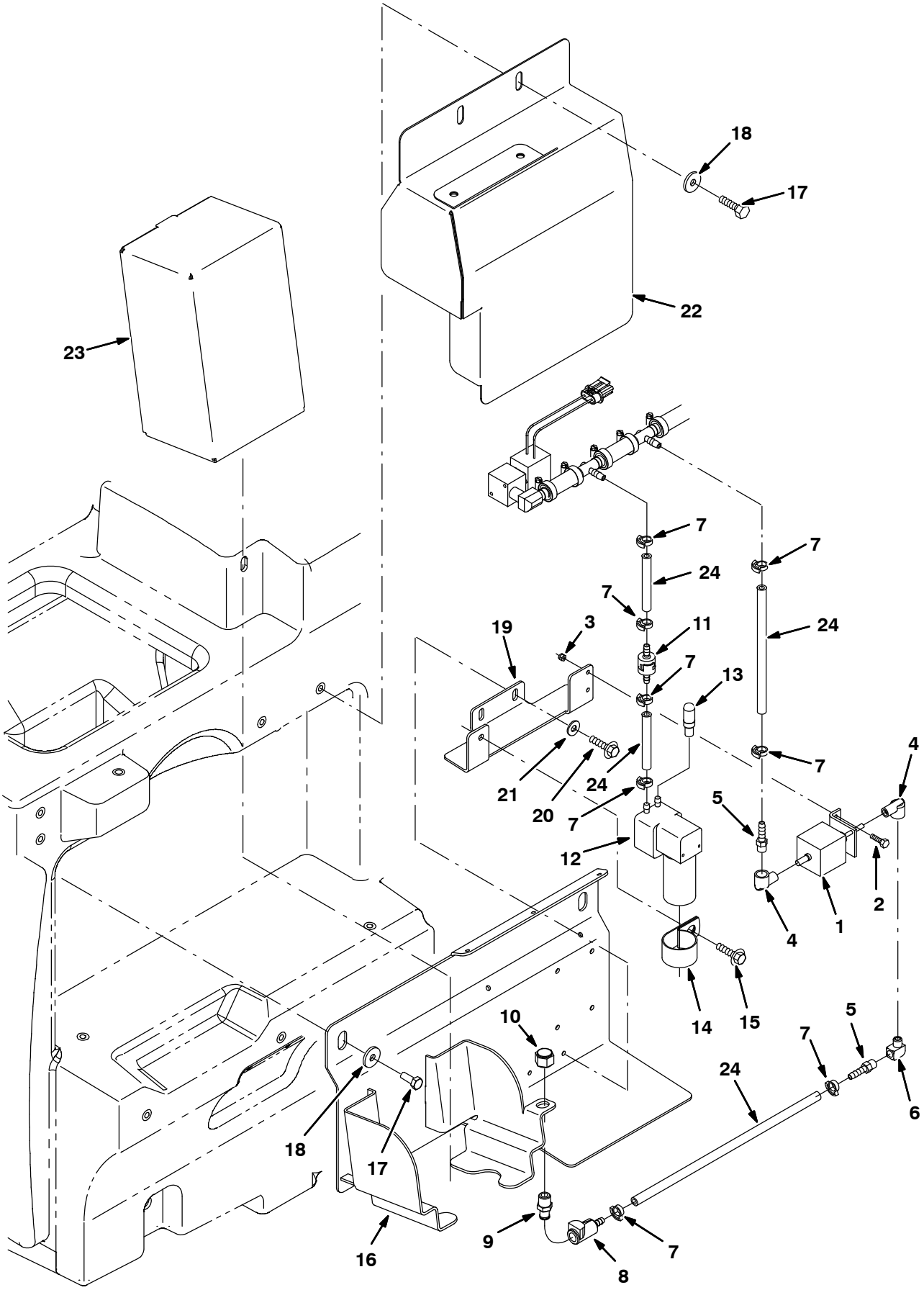

354469

Fig. 10 – FaST Air Pump and Detergent Group (000000–002532)

Ref.	Part No.	Serial Number	Description	Qty.
1	1018097	(000000–002532)	Pump, Detgt, 12vdc	1
2	09206	(000000–002532)	Screw, Hex, M4 X 0.7 X 12, 8.8	2
3	02850	(000000–002532)	Nut, Hex, Lock, M4 X 0.7, Nl	2
4	1014082	(000000–002532)	Fitting, Brs, E90, Cf03/Pf02	2
5	150525	(000000–002532)	Fitting, Brs, Str, Bm04/Pm02	2
6	11984	(000000–002532)	Fitting, Pipe, E90, Pf02/Pm02	1
7	1014575	(000000–002532)	Clamp, Hose, Plstc .351–.394 Id	8
8	1002898	(000000–002532)	Fitting, Plstc, Str, Bm04, Cplg, Fem	1
9	1002899	(000000–002532)	Fitting, Plstc, Str, Pm04, Cplg, Mal	1
10	1005435	(000000–002532)	Fitting, Plstc, Pipe, Cap, Pf04	1
11	1013902	(000000–002532)	Valve, Check, 0002psi Bm04/Bm04	1
12	1018780	(000000–002532)	Pump, Air, Ele, 12vdc	1
13	1005255	(000000–002532)	Filter Assy, Air, Mold, Ure	1
14	53466	(000000–002532)	Clamp, Cable, Stl, 1.50d X 1.00w, 1h	1
15	76099	(000000–002532)	Screw, Hex, M8 X 1.25 X 25, Fmg	1
16	1026067	(000000–002532)	Bracket Wldt, Mtg [FaST]	1
17	09740	(000000–002532)	Screw, Hex, M8 X 1.25 X 20, Ss	4
18	1017218	(000000–002532)	Washer, Flat, 0.32b 1.00d .12, Ss	4
19	1029118	(000000–002532)	Bracket, Mtg [FaST]	1
20	361339	(000000–002532)	Screw, Hex, M6 X 1.0 X 16, Fmg	2
21	32490	(000000–002532)	Washer, Flat, 0.25 Std	2
22	1033297	(000000–002532)	Cover Wldt [FaST]	1
23	1017022	(000000–002532)	Detergent Pkg, 2 Liter, Sgl [665]	1
24	1006415	(000000–002532)	Hose, Afmkt, Pvc, Clr 0.25id 03ft	1

Fig. 11 – FaST Foam Filter Group (000000–002532)

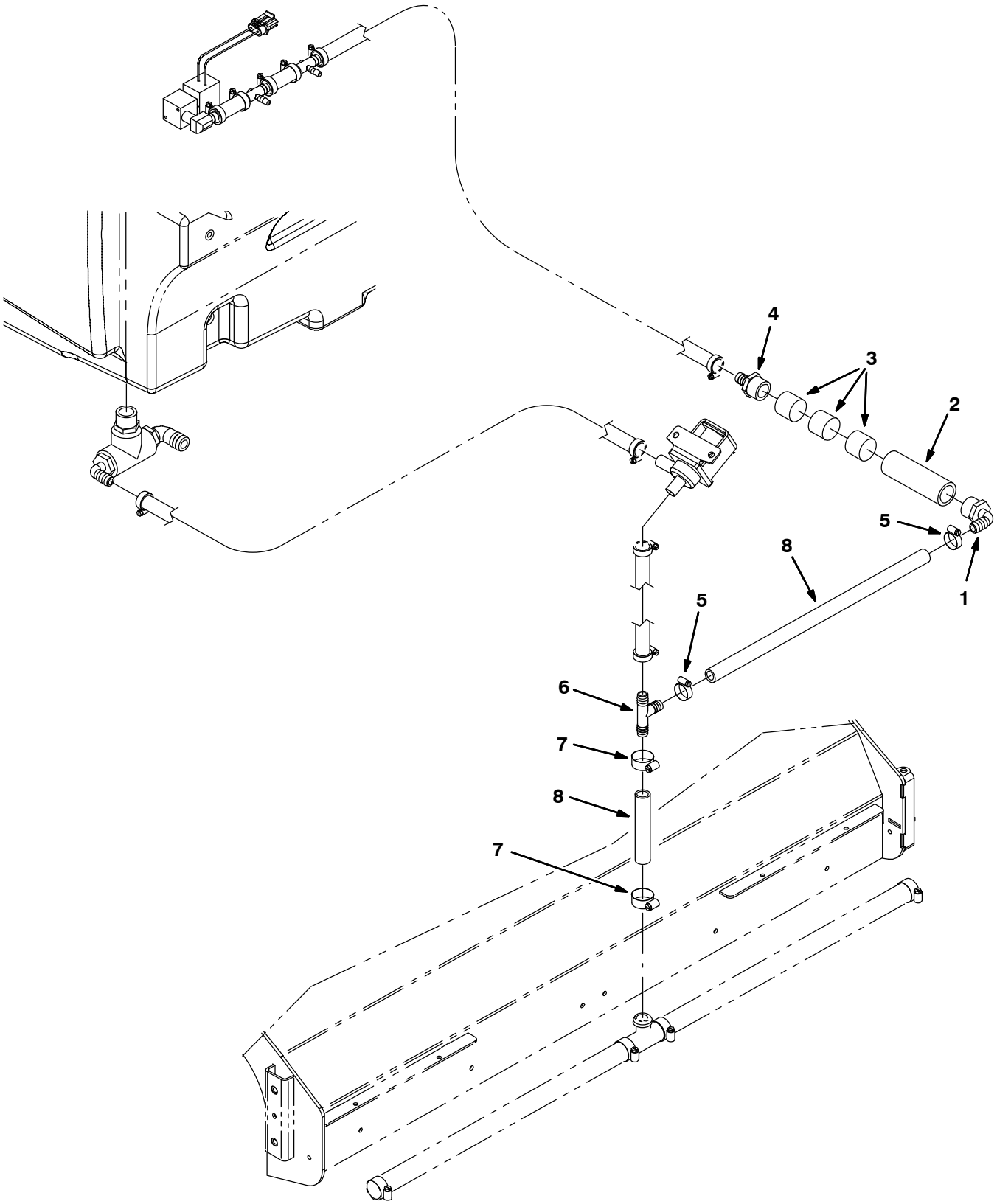

354470

Fig. 11 – FaST Foam Filter Group (000000–002532)

Ref.	Part No.	Serial Number	Description	Qty.
1	1005552	(000000–002532)	Fitting, Plstc, E90, Bm08/Pm12, Nyl	1
2	1005086	(000000–002532)	Tube, Pvc, Clr, 4.0l [Shc80]	1
3	1002789	(000000–002532)	Filter, Foam, Rbr, 1.20d, 1.0l	3
4	79273–1	(000000–002532)	Fitting, Plstc, Str, Bm08/Pm12	1
5	54333	(000000–002532)	Clamp, Hose, Wormdrive, 0.31–0.88d, .31w	2
6	385644	(000000–002532)	Fitting, Plstc, Tee, Bm08/Bm12/Bm12, Br	1
7	63810	(000000–002532)	Clamp, Hose, Wormdrive, 0.56–1.06d, .56w	2
8	1011521	(000000–002532)	Hose, Afmkt, Pvc, Brd 0.50id 02ft	1

Fig. 12 – FaST Foam Filter Group, Side Brush (000000–002532)

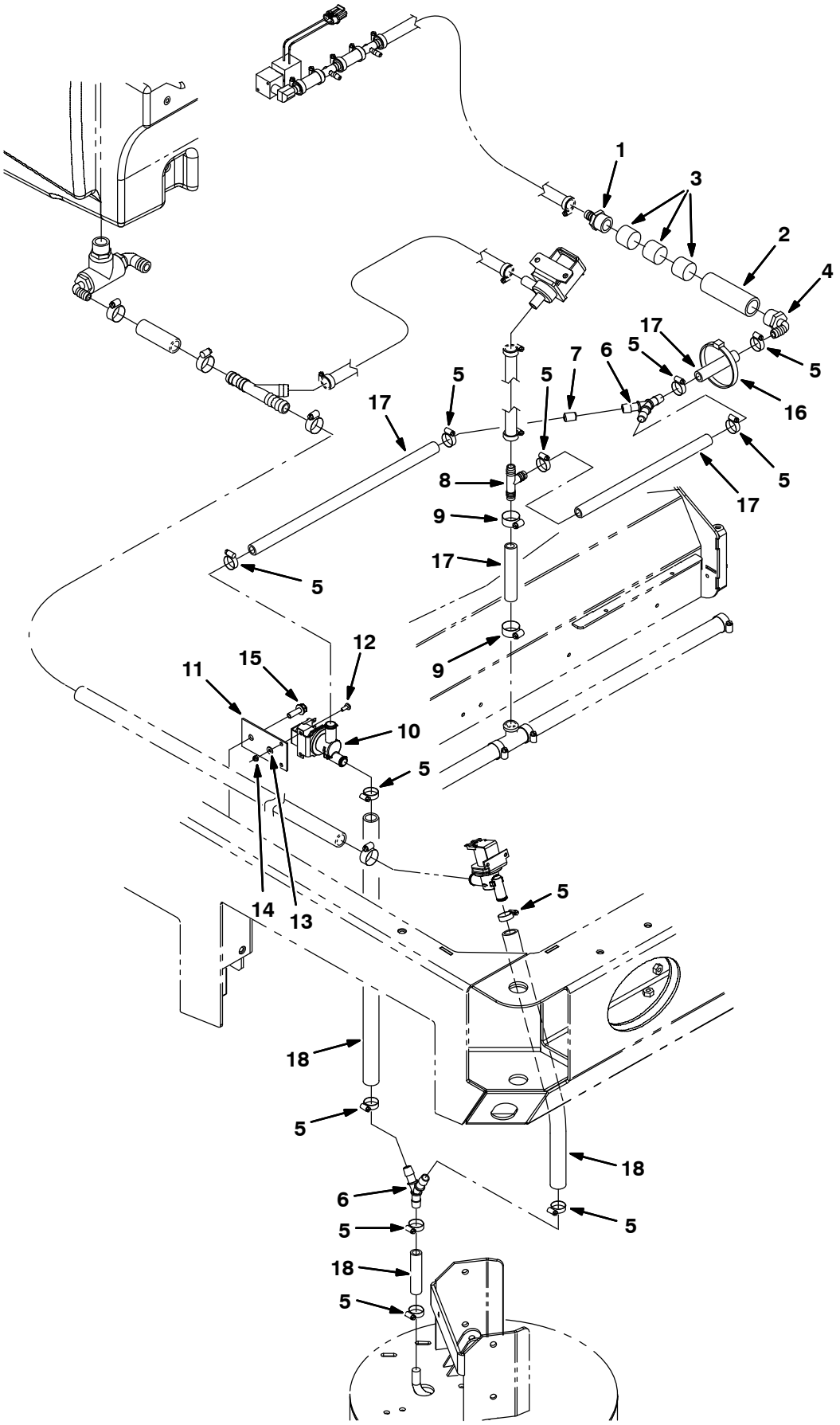

354471

Fig. 12 – FaST Foam Filter Group, Side Brush (000000–002532)

Ref.	Part No.	Serial Number	Description	Qty.
1	79273–1	(000000–002532)	Fitting, Plstc, Str, Bm08/Pm12	1
2	1005086	(000000–002532)	Tube, Pvc, Clr, 4.0l [Shc80]	1
3	1002789	(000000–002532)	Filter, Foam, Rbr, 1.20d, 1.0l	3
4	1005552	(000000–002532)	Fitting, Plstc, E90, Bm08/Pm12, Nyl	1
5	54333	(000000–002532)	Clamp, Hose, Wormdrive, 0.31–0.88d, .31w	10
6	1010668	(000000–002532)	Fitting, Plstc, Y, Bm08/Bm08/Bm08, Nyl	2
7	1018333	(000000–002532)	Fitting, Plstc, Rst, .50od /.13id	1
8	385644	(000000–002532)	Fitting, Plstc, Tee, Bm08/Bm12/Bm12, Br	1
9	63810	(000000–002532)	Clamp, Hose, Wormdrive, 0.56–1.06d, .56w	2
10	1037825	(000000–002532)	Valve, Solenoid, 12vdc, Water Flow	1
11	1030511	(000000–002532)	Plate, Mtg, Valve	11
12	09200	(000000–002532)	Screw, Pan, M5 X 0.8 X 12, Ss	2
13	01683	(000000–002532)	Washer, Flat, #10, Ss	2
14	09739	(000000–002532)	Nut, Hex, Lock, M5 X 0.8, Nl, Ss	2
15	76099	(000000–002532)	Screw, Hex, M8 X 1.25 X 25, Fmg	1
16	763116	(000000–002532)	Tie, Cable, Nyl, 15.3l . W 4.5 Max D	1
17	1011412	(000000–002532)	Hose, Afmkt, Pvc, Brd 0.50id 08ft	1
18	1015067	(000000–002532)	Hose, Afmkt, Pvc, Clr 0.50id 08ft	1

Fig. 13 – FaST Wire Harness Group (000000–002532)

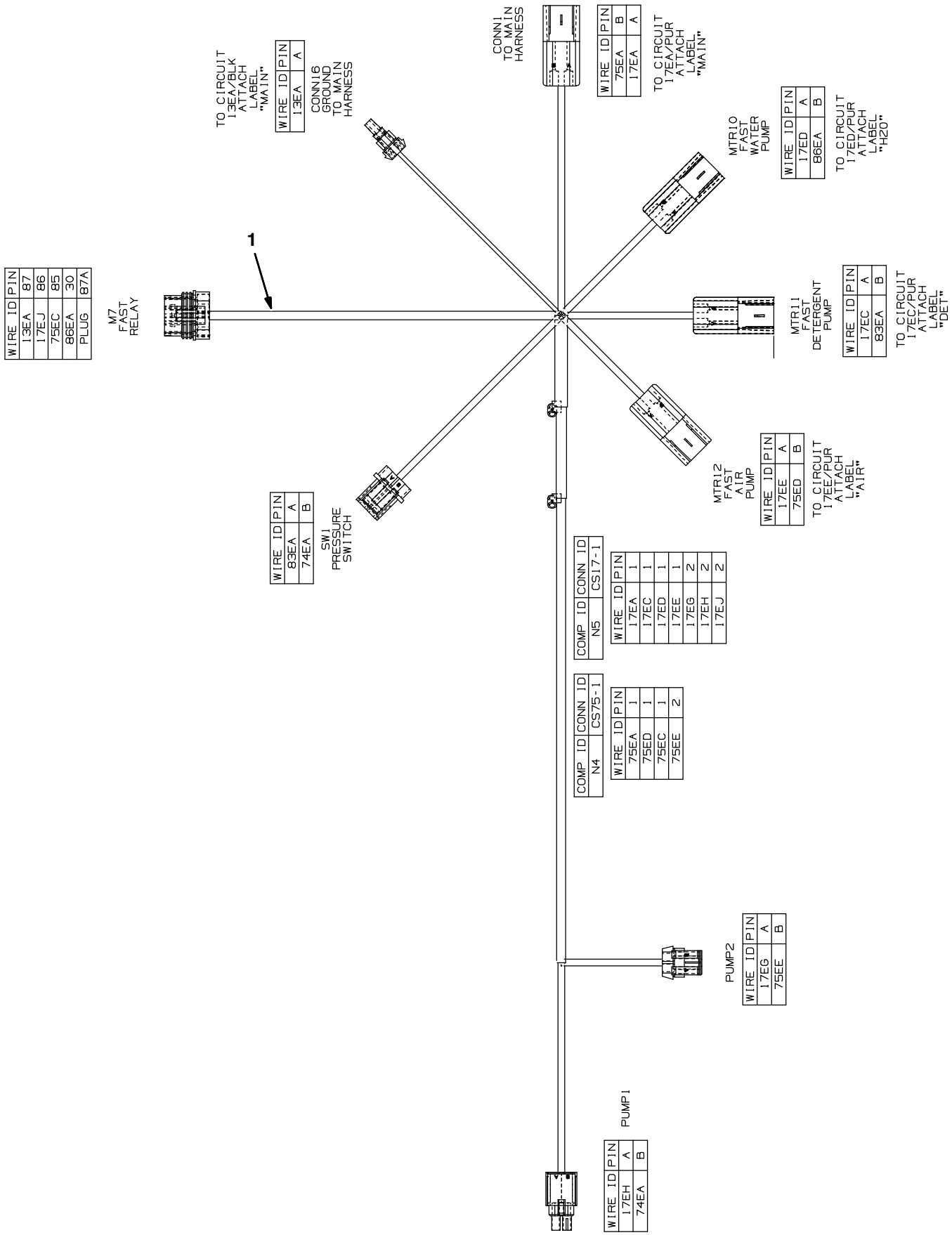

1019646–354472

Fig. 13 – FaST Wire Harness Group (000000–002532)

Ref.	Part No.	Serial Number	Description	Qty.
1	1019646	(000000–002532)	Harness [FaST, M20 And T20]	1

Fig. 14 – FaST Pumps and Detergent Group (002533–)

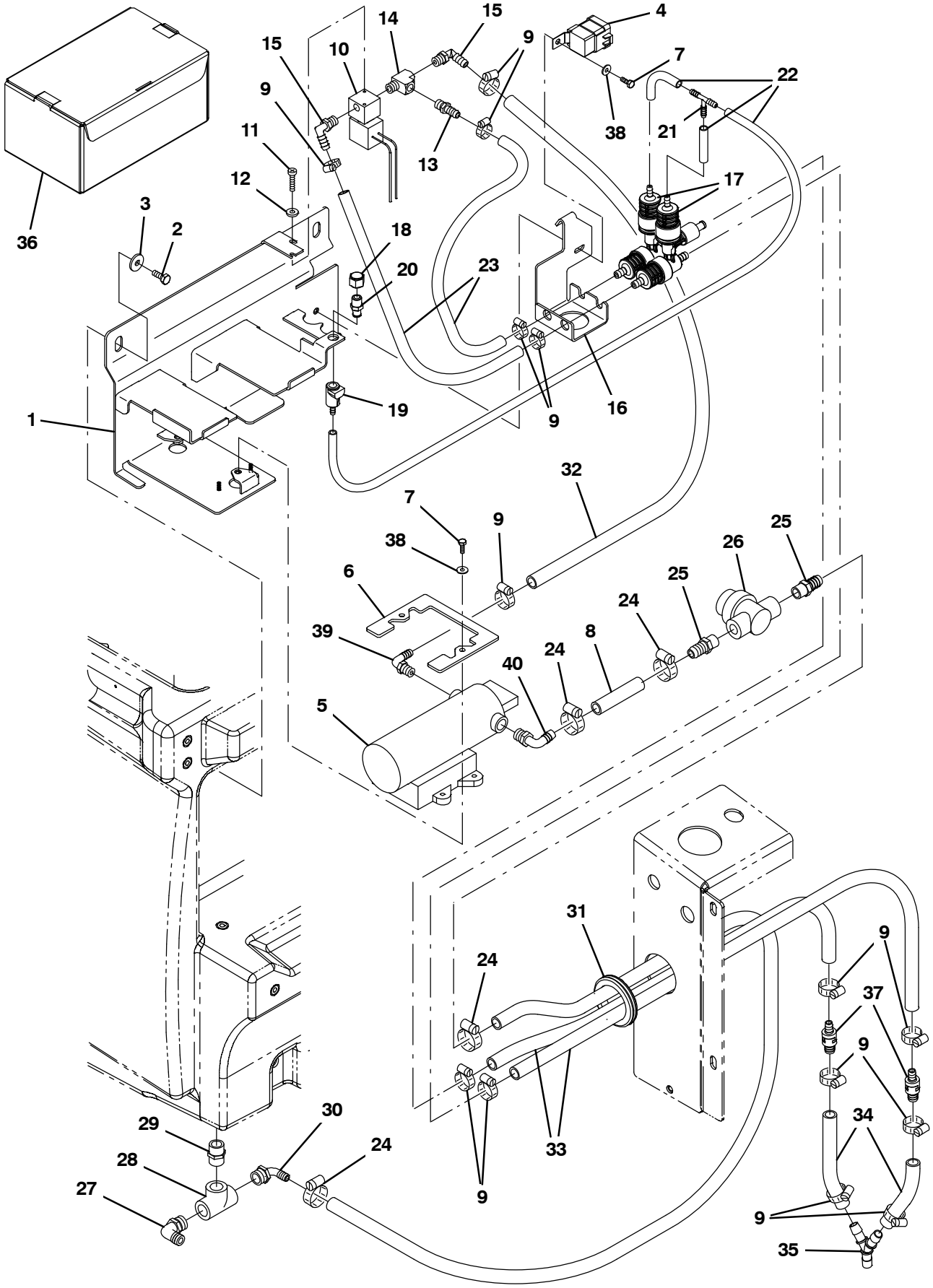

354789

Fig. 14 – FaST Pumps and Detergent Group (002533–)

Ref.	Part No.	Serial Number	Description	Qty.
1	1044342	(002533–)	Bracket Wldt, Mtg [FaST Gen 2+]	1
2	09740	(002533–)	Screw, Hex, M8 X 1.25 X 20, Ss	2
3	1017218	(002533–)	Washer, Flat, 0.32b 1.00d .12, Ss	2
4	56186	(002533–)	Relay, 12vdc, 040a, Spdt No	1
5	1036801	(002533–)	Pump, Soltn, 13.7vdc, 65psi [FaST Ii+]	1
6	1039357	(002533–)	Bracket, Retainer, Pump	1
7	15678	(002533–)	Screw, Hex, M6 X 1.00 X 16, Ss	3
8	1011403	(002533–)	Hose, Afmkt, Pvc, Brd, 0.50Id, 01Ft, Clr	1
9	43844	(002533–)	Clamp, Hose, Wormdrive, 0.25–0.62d, .31w	14
10	1018098	(002533–)	Valve, Water, Solenoid, 12vdc 6.0mm Pf04	1
11	09200	(002533–)	Screw, Pan, Phl, M5 X 0.80 X 12, Ss	2
12	01683	(002533–)	Washer, Flat, 10, Ss	2
13	150540	(002533–)	Fitting, Plstc, Str, Bm06/Pm04	1
14	150709	(002533–)	Fitting, Brs, Tee, Pf04/Pf04/Pm04, Run	1
15	57248	(002533–)	Fitting, Plstc, E90, Bm06/Pm04, Nyl	2
16	1044343	(002533–)	Bracket, Mtg [FaST Gen 2+]	1
17	9008868	(002533–)	FaST Kit, Injector [M20/T20/M30 FaST III] (See Breakdowns)	2
18	1005435	(002533–)	Fitting, Plstc, Pipe, Cap, Pf04	1
19	1002898	(002533–)	Fitting, Plstc, Str, Bm04, Cplg, Fem	1
20	1002899	(002533–)	Fitting, Plstc, Str, Pm04, Cplg, Mal	2
21	150713	(002533–)	Fitting, Plstc, Tee, Bm04/Bm04/Bm04	1
22	1014986	(002533–)	Hose, Afmkt, Pvc, Clr, 0.25id, 02ft	1
23	1006416	(002533–)	Hose, Afmkt, Pvc, Clr, 0.38id, 03ft	1
24	54333	(002533–)	Clamp, Hose, Wormdrive, 0.31–0.88d, .31w	8
25	150538	(002533–)	Fitting, Plstc, Str, Bm06/Pm06	2
26	1005302	(002533–)	Filter, In–Line, Pf06/Pf06 080mesh 02.6l	1
27	14877	(002533–007259)	Fitting, Plstc, E90, Bm12/Pm12	1
27	73468	(007260–)	Fitting, Plstc, E90, Bm10/Pm12	1
28	42133A	(002533–)	Fitting, Plstc, Tee, Pf12/Pf12/Pf12	1
29	24544	(002533–)	Fitting, Plstc, Str, Pm12/Pm12 1.60l	1
30	1005552	(002533–)	Fitting, Plstc, E90, Bm08/Pm12, Nyl	1
31	10632–19	(002533–)	Grommet, Rbr, 2.13id, F/2.5h, .12 Matl	1
32	1006400	(002533–)	Hose, Afmkt, Pvc, Brd, 0.38id, 03ft, Clr	1
33	1024237	(002533–)	Hose, Afmkt, Pvc, Wir, 0.50id, 03ft, Clr	1
34	1014929	(002533–)	Hose, Afmkt, Pvc, Clr, 0.38id, 01ft	1
35	1010668	(002533–)	Fitting, Plstc, Y, Bm08/Bm08/Bm08, Nyl	1
36	1017022	(002533–)	Detergent, Pkg, 2 Liter, Sgl [665]	1
37	1035794	(002533–)	Valve, Check, 0005psi Bm06/Bm08	2
38	01684	(002533–)	Washer, Flat, 0.27B 0.69D .05, Ss	3
39	1049254	(002533–)	Fitting, Nyl, Qdc, E90, Bm08/ Qm10	1
40	1049259	(002533–)	Fitting, NylY, Qdc, E90, Bm06/ Qm10	1

Fig. 15 – FaST Solution Supply Group (002533–)

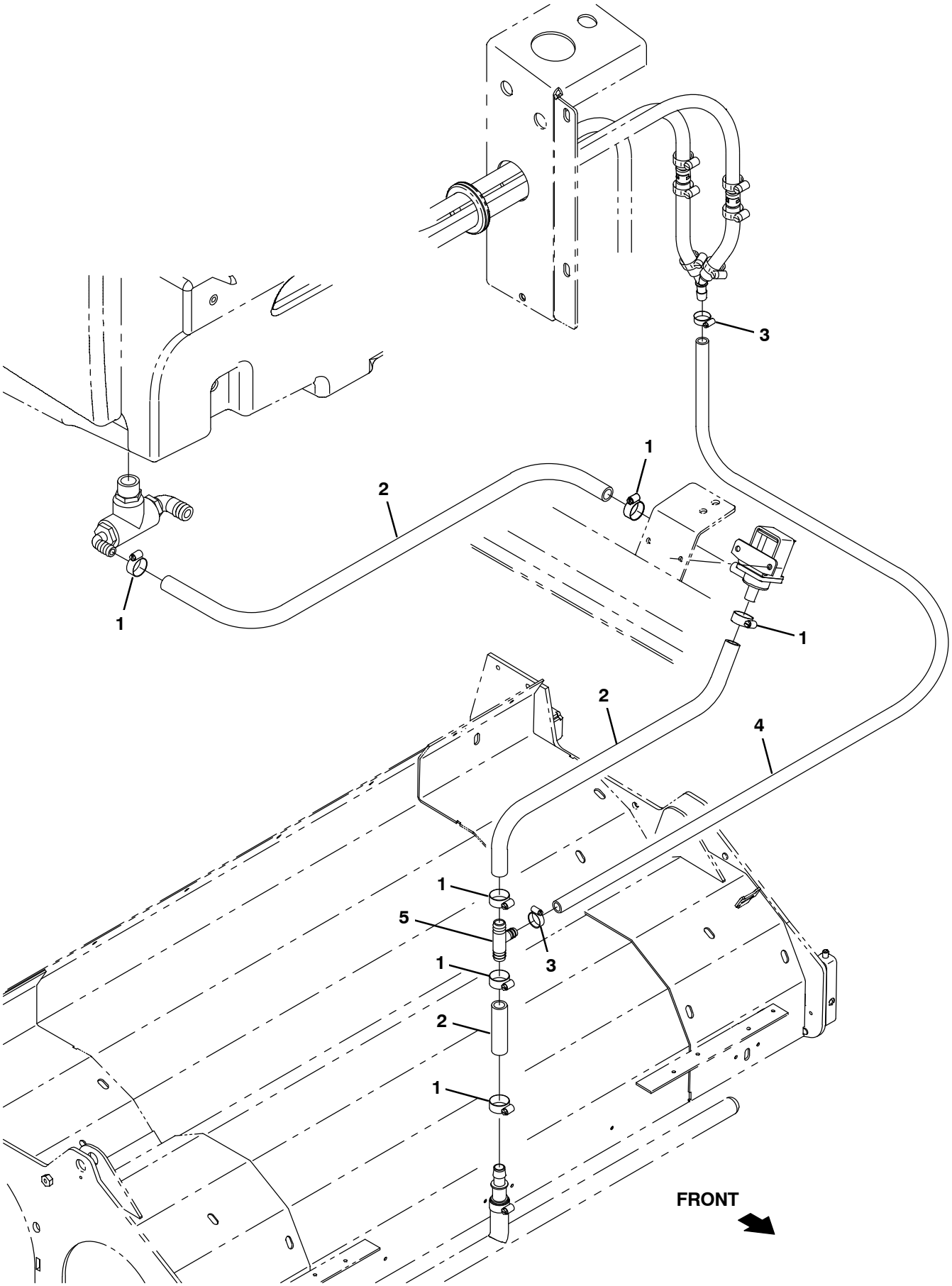

354791

Fig. 15 – FaST Solution Supply Group (002533–)

Ref.	Part No.	Serial Number	Description	Qty.
1	63810	(002533–)	Clamp, Hose, Wormdrive, 0.56–1.06d, .56w	6
2	1015045	(002533–007259)	Hose, Afmkt, Pvc, Brd, 0.75id, 08ft, Clr	1
2	1015032	(007260–)	Hose, Afmkt, Pvc, Brd, 0.62id, 08ft, Clr	1
3	54333	(002533–)	Clamp, Hose, Wormdrive, 0.31–0.88d, .31w	2
4	1011412	(002533–)	Hose, Afmkt, Pvc, Brd, 0.50id, 08ft, Clr	1
5	385644	(002533–007259)	Fitting, Plstc, Tee, Bm08/Bm12/Bm12, Br	1
5	1015486	(007260–)	Fitting, Plstc, Tee, Bm08/Bm10/Bm10, Br	1

Fig. 16 – FaST Solution Supply Group with Side Brush (002533–)

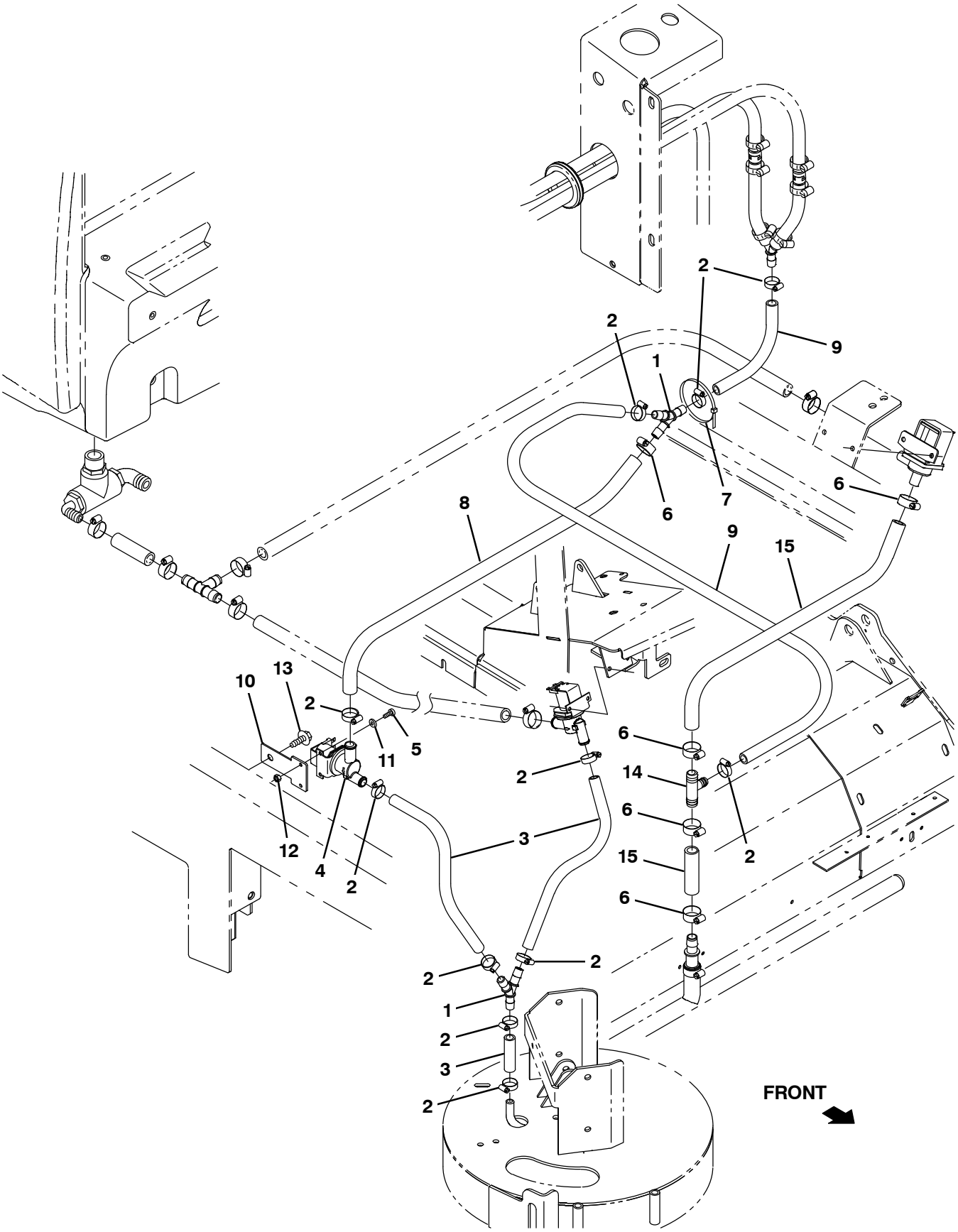

354792

Fig. 16 – FaST Solution Supply Group with Side Brush (002533–)

Ref.	Part No.	Serial Number	Description	Qty.
1	1010668	(002533–)	Fitting, Plstc, Y, Bm08/Bm08/Bm08, Nyl	2
2	54333	(002533–)	Clamp, Hose, Wormdrive, 0.31–0.88d, .31w	11
3	1015067	(002533–)	Hose, Afmkt, Pvc, Clr, 0.50id, 08ft	1
4	1037825	(002533–)	Valve, Solenoid, 12vdc, Water Flow	1
5	09200	(002533–)	Screw, Pan, Phl, M5 X 0.80 X 12, Ss	2
6	63810	(002533–)	Clamp, Hose, Wormdrive, 0.56–1.06d, .56w	5
7	763116	(002533–)	Tie, Cable, Nyl, 15.3l . W 4.5 Max D	1
8	31543	(002533–)	Hose, Heater, E90, 0.62id, 24.0 4.0	1
9	1011412	(002533–)	Hose, Afmkt, Pvc, Brd, 0.50id, 08ft, Clr	1
10	1030511	(002533–)	Plate, Mtg, Valve	1
11	01683	(002533–)	Washer, Flat, 10, Ss	2
12	09739	(002533–)	Nut, Hex, Lock, M5 X 0.80, Nl, Ss	2
13	76099	(002533–)	Screw, Hex, M8 X 1.25 X 25, Fmg	1
14	385644	(002533–007259)	Fitting, Plstc, Tee, Bm08/Bm12/Bm12, Br	1
14	1015486	(007260–)	Fitting, Plstc, Tee, Bm08/Bm10/Bm10, Br	1
15	1006401	(002533–007259)	Hose, Afmkt, Pvc, Brd, 0.50id, 03ft, Clr	1
15	1015026	(007260–)	Hose, Afmkt, Pvc, Brd, 0.62id, 03ft, Clr	1

Fig. 17 – FaST Wire Harness Group (002533–)

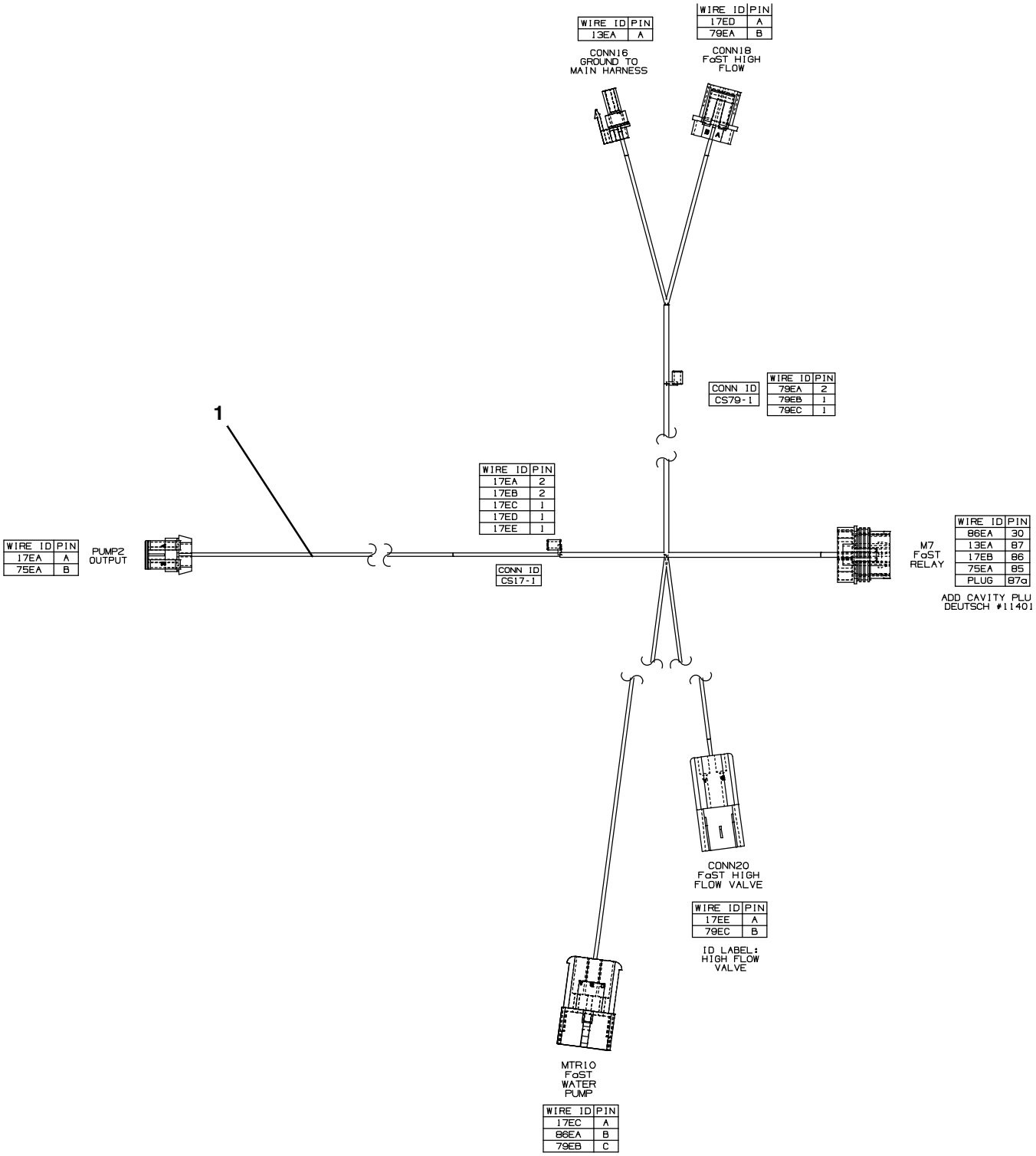

354724

Fig. 17 – FaST Wire Harness Group (002533–)

Ref.	Part No.	Serial Number	Description	Qty.
1	1037809	(002533–)	Harness, Wire [FaST Gen 2]	1

Fig. 18 – ec–H20 Solution Pump Group

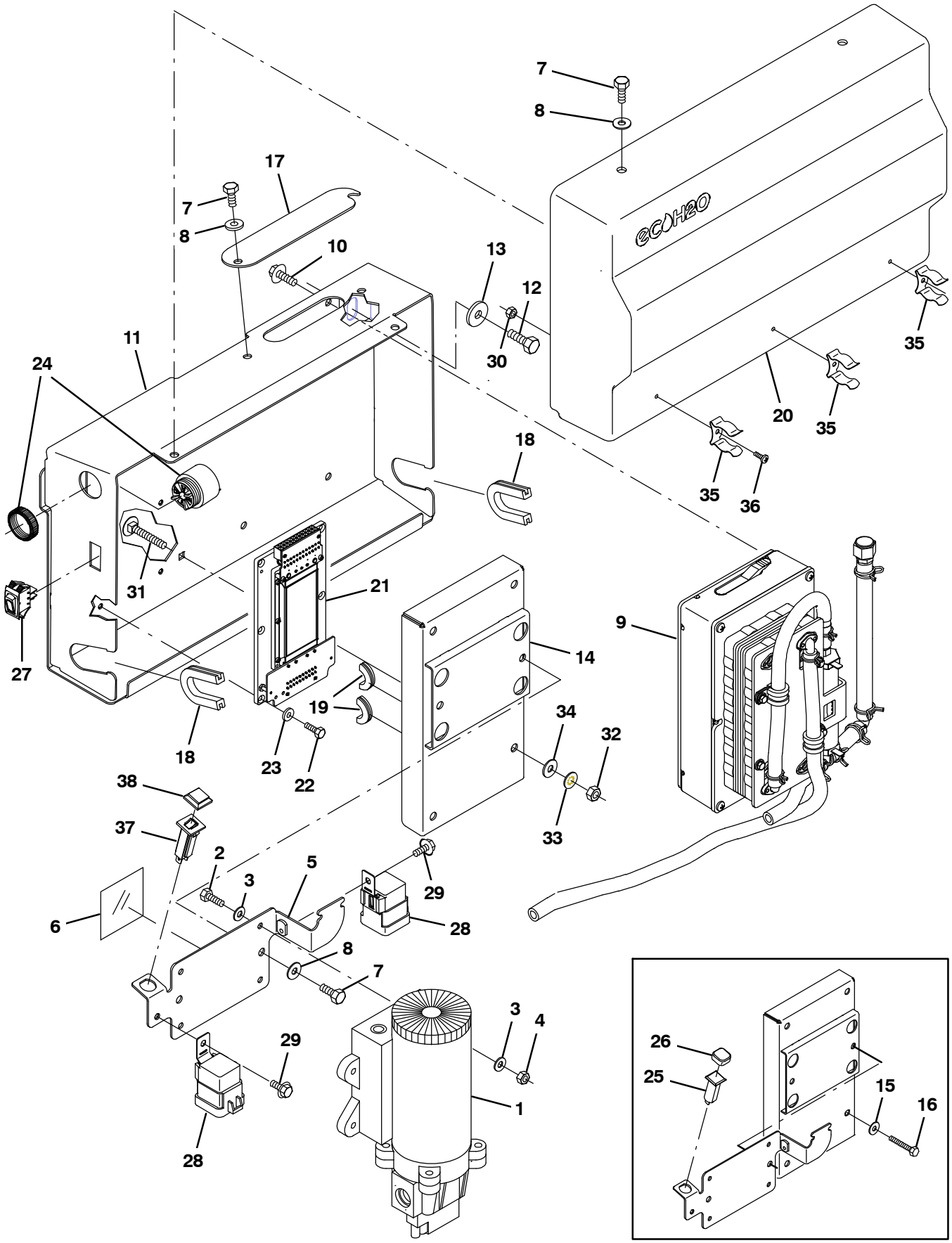

356033

Fig. 18 – ec–H20 Solution Pump Group

Ref.	Part No.	Serial Number	Description	Qty.
1	1060624	(000000–)	Pump, Soltn, Ele, 13.7vdc,12/28psi	1
2	09252	(000000–)	Screw, Hex, M5 X 0.80 X 20, 8.8	4
3	19066	(000000–)	Washer, Flat, 10	8
4	06549	(000000–)	Nut, Hex, Lock, M5 X 0.80, Nl	4
5	1060273	(000000–)	Plate, Mtg, Pump	1
6	1059677	(000000–)	Strip, Rbr, 0.06 03.54w 03.5l [Neo/60]	1
7	09744	(000000–)	Screw, Hex, M6 X 1.00 X 12, Ss	6
8	01684	(000000–)	Washer, Flat, 0.27b 0.69d .05, Ss	6
9	9007882	(000000–)	Module Kit, Replmt [Ec–H20] (See Breakdowns)	1
10	1040467	(000000–)	Screw, Hex, M6 X 1.00 X 20, 9.8, Sems	4
11	1060292	(000000–)	Plate Wldt, Mtg	1
12	09740	(000000–)	Screw, Hex, M8 X 1.25 X 20, Ss	2
13	1017218	(000000–)	Washer, Flat, 0.32b 1.00d .12, Ss	2
14	1060185	(000000–)	Cover Wldt, Power Supply	1
15	01684	(000000–xxxxxx)	Washer, Flat, 0.27b 0.69d .05, Ss	4
16	07805	(000000–xxxxxx)	Screw, Hex, M6 X 1.00 X 35, Ss	4
17	1060291	(000000–)	Plate, Inspection	1
18	1020168	(000000–)	Molding, Afmkt, Trim, Pvc, .08 .11, 01Ft	1
19	10632–4	(000000–)	Grommet, Rbr, 0.62id, F/0.9h, .06 Matl	1
20	1060719	(000000–)	Cover, Trimmed	1
21	1058963	(000000–)	Converter, Ele, 12–36 Vdc	1
22	09206	(000000–)	Screw, Hex, M4 X 0.70 X 12, 8.8	4
23	19065	(000000–)	Washer, Flat, 08	4
24	1052726	(000000–)	Alarm, 9–48vdc, 95 Db(A) [Ec–H20]	1
25	1053078	(000000–003658)	Circuitbreaker, 2.0a, Resetable	1
26	1046173	(000000–003658)	Boot, Circuitbreaker	1
27	1044393	(000000–)	Switch, Rocker, Spst, Mom	1
28	56186	(000000–)	Relay, 12vdc, 040a, Spdt No	2
29	223198	(000000–)	Screw, Hex, M5 X 0.80 X 10, Fmg	2
30	33932	(000000–)	Nut, Hex, Lock, M4 X 0.70, Nl, Ss	3
31	1062804	(xxxxxx–)	Bolt, Carriage, M06 X 1.00 X 40, 4.6	4
32	41359	(xxxxxx–)	Nut, Hex, Std, M6 X 1.00, 8	4
33	32982	(xxxxxx–)	Washer, Lock, Int, 0.25	4
34	32483	(xxxxxx–)	Washer, Flat, 0.25, Sae	4
35	1029057	(000000–)	Clip, Grip, Finger, 0.88–1.25d	3
36	12323	(000000–)	Screw, Pan, Phl, M4 X 0.70 X 20, Ss	3
37	1064183	(003659–)	Circuitbreaker, 02.0a, Resetable	1
38	1064191	(003659–)	Boot, Circuitbreaker	1

Fig. 19 – ec–H20 Solution Pump Supply Group

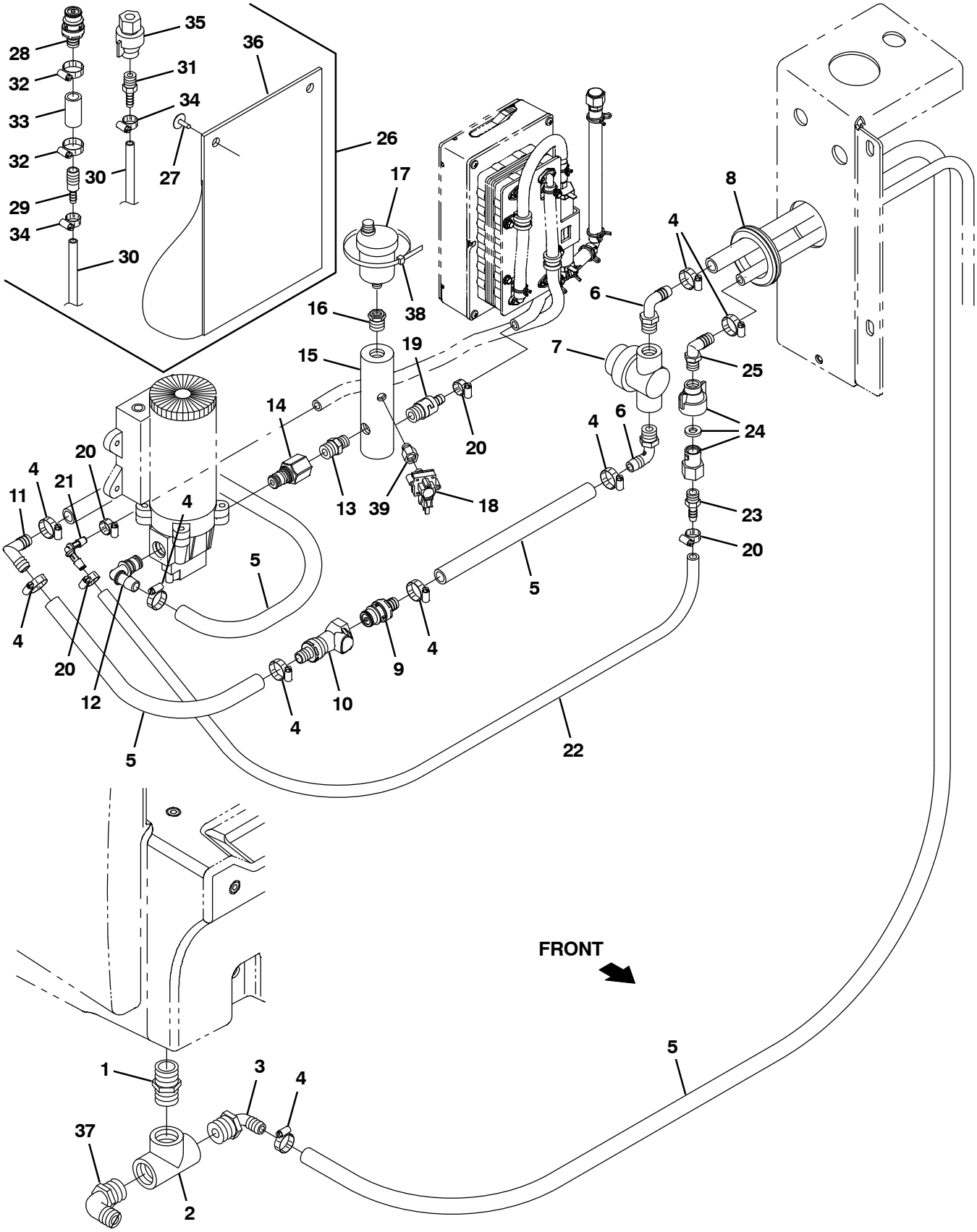

356034

Fig. 19 – ec–H20 Solution Pump Supply Group

	Ref.	Part No.	Serial Number	Description	Qty.
	1	24544	(000000–)	Fitting, Plstc, Str, Pm12/Pm12 1.60l	1
	2	42133A	(000000–)	Fitting, Plstc, Tee, Pf12/Pf12/Pf12	1
	3	1005552	(000000–)	Fitting, Plstc, E90, Bm08/Pm12, Nyl	1
	4	54333	(000000–)	Clamp, Hose, Wormdrive, 0.31–0.88d, .31w	9
	5	1011837	(000000–)	Hose, Afmkt, Pvc, Brd, 0.50id, 12ft, Clr	1
	6	64778	(000000–)	Fitting, Plstc, E90, Bm08/Pm06	2
	7	1005302	(000000–)	Filter, In–Line, Pf06/Pf06 080mesh 02.6l	1
	8	10632–19	(000000–)	Grommet, Rbr, 2.13id, F/2.5h, .12 Matl	3
	9	1017415	(000000–)	Insert, Cplg, Qm, Bm08	1
	10	1017413	(000000–)	Housing, Cplg, Qf / Pm08	1
	11	63987–1	(000000–)	Fitting, Plstc, E90, Bm08/Bm08	1
	12	1049254	(000000–)	Fitting, Nyl, Qdc, E90, Bm08/ Qm10	1
	13	1059372	(000000–)	Fitting, Plstc, Str, Pf06/Qm10, Pvc	1
	14	1005219	(000000–)	Fitting, Plstc, Str, Pm04/Pm06, Nyl	1
	15	1060596	(000000–)	Manifold, Water	1
	16	24698	(000000–)	Fitting, Brs, Str, Pf02/Pm06	1
	17	1017386	(000000–)	Valve, Vent, Air, Float Type	1
	18	1058935	(000000–)	Switch, Press, 50 Psi, Pm02	1
	19	1060693	(000000–)	Valve, Check, 0005psi Pm04/Bm06	1
	20	43844	(000000–)	Clamp, Hose, Wormdrive, 0.25–0.62d, .31w	4
	21	1059391	(000000–)	Fitting, Plstc, E90, Bm05/Bm05, Nyl	1
	22	1052336	(000000–)	Hose, Afmkt, PVC, Brd, 0.31Id, 03Ft, Clr	2
	23	1052017	(000000–)	Fitting, Plstc, Str, Bm05/Pm04	1
	24	1071280	(000000–)	Fitting Assy, Qdc, Pf04	1
	25	65581	(000000–)	Fitting, Plstc, E90, Bm08/Pm04	1
▽	26	9014281	(000000–)	ec–H2O Kit, Flush, Replmt[M20, M30&T20]	1
▲	27	72968	(000000–)	Rivet, Plstc, .250d X 0.90	2
▲	28	1017415	(000000–)	Insert, Cplg, Qm, Bm08	1
▲	29	630164	(000000–)	Fitting, Plstc, Str, Bm04/Bm08	1
▲	30	1006415	(000000–)	Hose, Afmkt, Pvc, Clr, 0.25id, 03ft	2
▲	31	50901	(000000–)	Fitting, Plstc, Str, Bm04/Pm04	1
▲	32	54333	(000000–)	Clamp, Hose, Wormdrive, 0.31–0.88d, .31w	2
▲	33	1011403	(000000–)	Hose, Afmkt, Pvc, Brd, 0.50id, 01ft, Clr	1
▲	34	43844	(000000–)	Clamp, Hose, Wormdrive, 0.25–0.62d, .31w	2
▲	35	1071280	(000000–)	Fitting Assy, Qdc, Pf04	1
▲	36	48790	(000000–)	Pouch	1
	37	14877	(000000–007259)	Fitting, Plstc, E90, Bm12/Pm12	1
	37	73468	(007260–)	Fitting, Plstc, E90, Bm10/Pm12	1
	38	49266	(000000–)	Tie, Cable, Nyl, 07.3l .19w 1.8 Max D	1
	39	1062403	(000000–)	Fitting, Brs, Snubber, Pm02/Pf02	1

Fig. 20 – ec–H20 Solution Supply Group

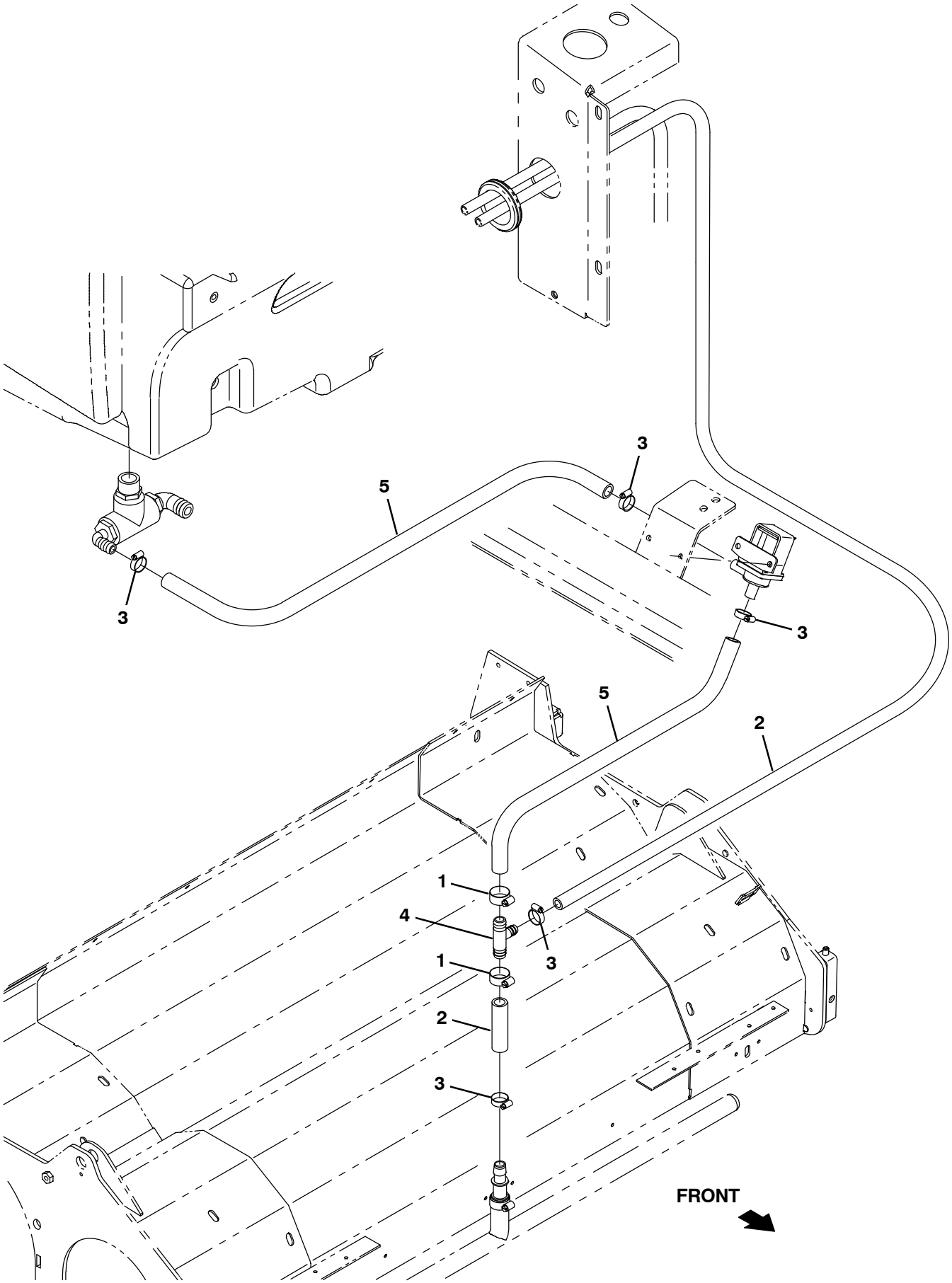

356037

Fig. 20 – ec–H20 Solution Supply Group

Ref.	Part No.	Serial Number	Description	Qty.
1	63810	(000000–)	Clamp, Hose, Wormdrive, 0.56–1.06d, .56w	2
2	1011837	(000000–)	Hose, Afmkt, Pvc, Brd, 0.50id, 12ft, Clr	1
3	54333	(000000–)	Clamp, Hose, Wormdrive, 0.31–0.88d, .31w	5
4	385644	(000000–007259)	Fitting, Plstc, Tee, Bm08/Bm12/Bm12, Br	1
4	1015486	(007260–)	Fitting, Plstc, Tee, Bm08/Bm10/Bm10, Br	1
5	1015045	(000000–007259)	Hose, Afmkt, Pvc, Brd, 0.75id, 08ft, Clr	1
5	1015032	(007260–)	Hose, Afmkt, Pvc, Brd, 0.62id, 08ft, Clr	1

Fig. 21 – ec–H20 Solution Supply Group with Side Brush

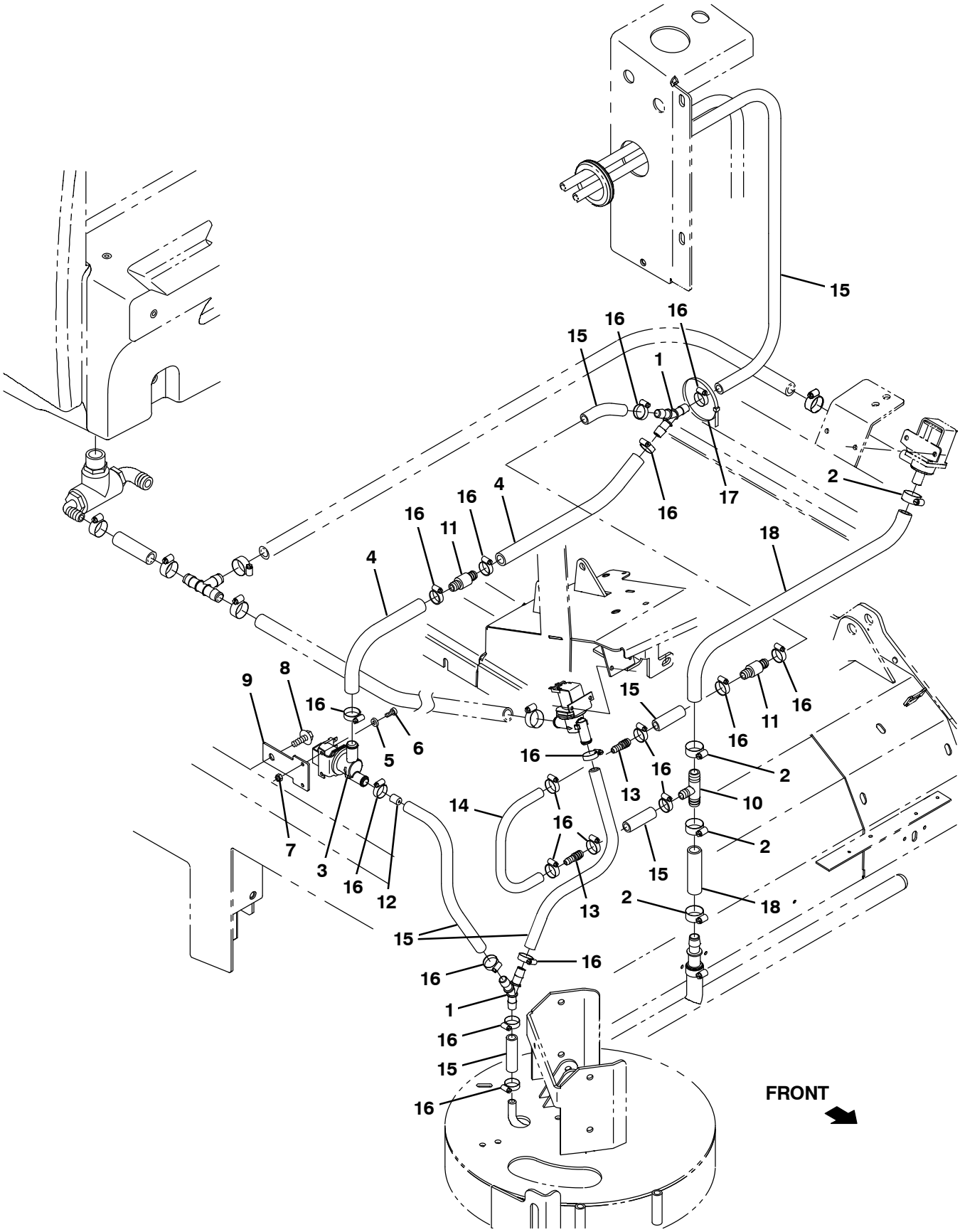

356038

Fig. 21 – ec–H20 Solution Supply Group with Side Brush

Ref.	Part No.	Serial Number	Description	Qty.
1	1010668	(000000–)	Fitting, Plstc, Y, Bm08/Bm08/Bm08, Nyl	1
2	63810	(000000–)	Clamp, Hose, Wormdrive, 0.56–1.06d, .56w	4
3	1037825	(000000–)	Valve Assy, Water, Solenoid, 12vdc	1
4	31543	(000000–)	Hose, Heater, E90, 0.62id, 24.0 4.0	1
5	01683	(000000–)	Washer, Flat, 10, Ss	2
6	24196	(000000–)	Screw, Pan, Phl, M5 X 0.80 X 20, Ss	2
7	09739	(000000–)	Nut, Hex, Lock, M5 X 0.80, Nl, Ss	2
8	76099	(000000–)	Screw, Hex, M8 X 1.25 X 25, Fmg	1
9	1030511	(000000–)	Plate, Mtg, Valve	1
10	385644	(000000–007259)	Fitting, Plstc, Tee, Bm08/Bm12/Bm12, Br	1
10	1015486	(007260–)	Fitting, Plstc, Tee, Bm08/Bm10/Bm10, Br	1
11	1010614	(000000–)	Valve, Check, 2gpm .5psi Bm08/Bm08	2
12	1061045	(000000–)	Plug, Restrictor	1
13	222375	(000000–)	Fitting, Plstc, Str, Bm06/Bm08	2
14	1014974	(000000–)	Hose, Afmkt, Pvc, Brd, 0.38id, 02ft, Clr	1
15	1011412	(000000–)	Hose, Afmkt, Pvc, Brd, 0.50id, 08ft, Clr	1
16	54333	(000000–)	Clamp, Hose, Wormdrive, 0.31–0.88d, .31w	18
17	763116	(000000–)	Tie, Cable, Nyl, 15.3l . W 4.5 Max D	1
18	1015026	(000000–)	Hose, Afmkt, Pvc, Brd, 0.62id, 03ft, Clr	1

Fig. 22 – ec–H20 Wire Harnesses Group

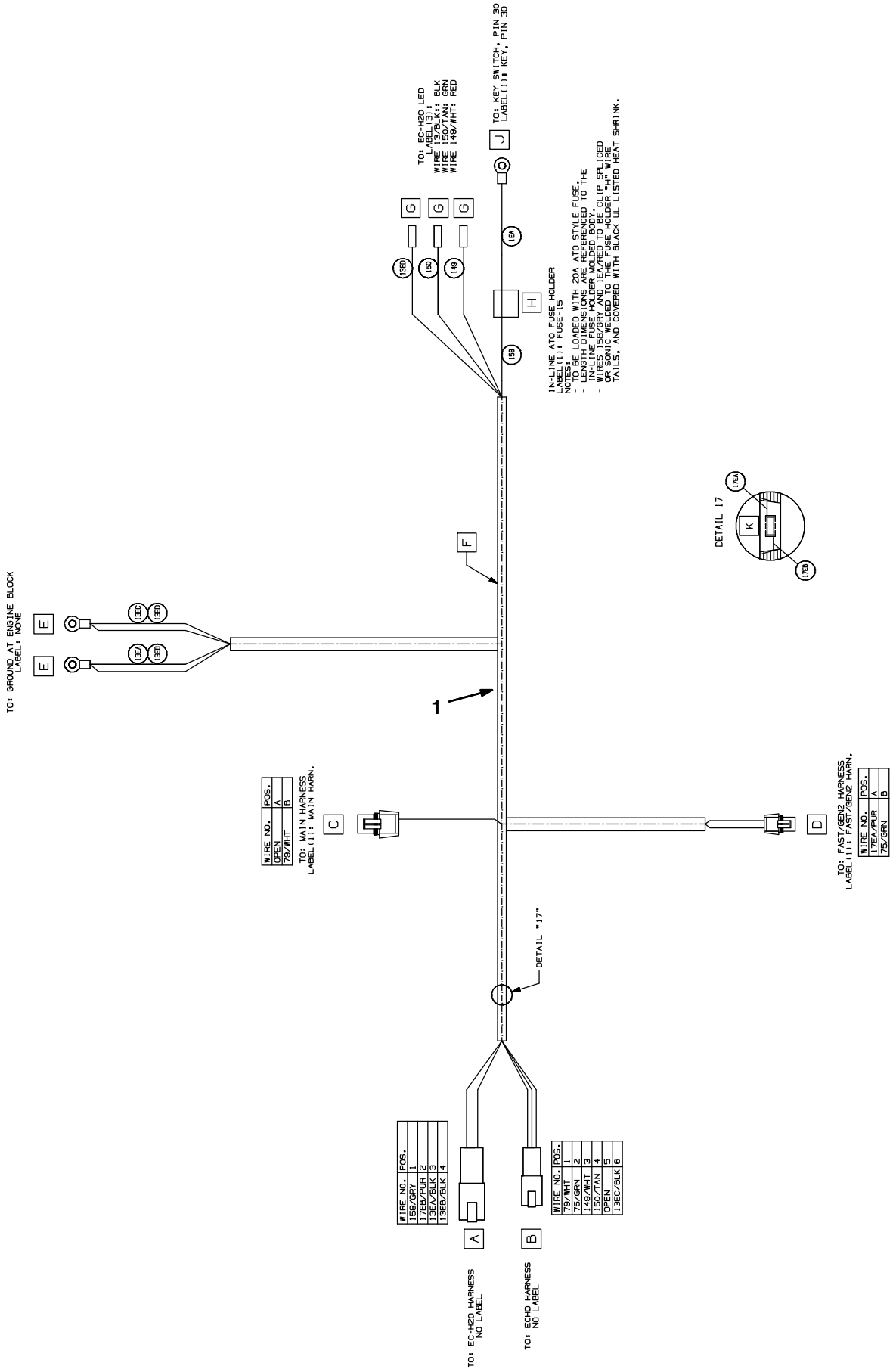

Fig. 22 – ec–H20 Wire Harnesses Group

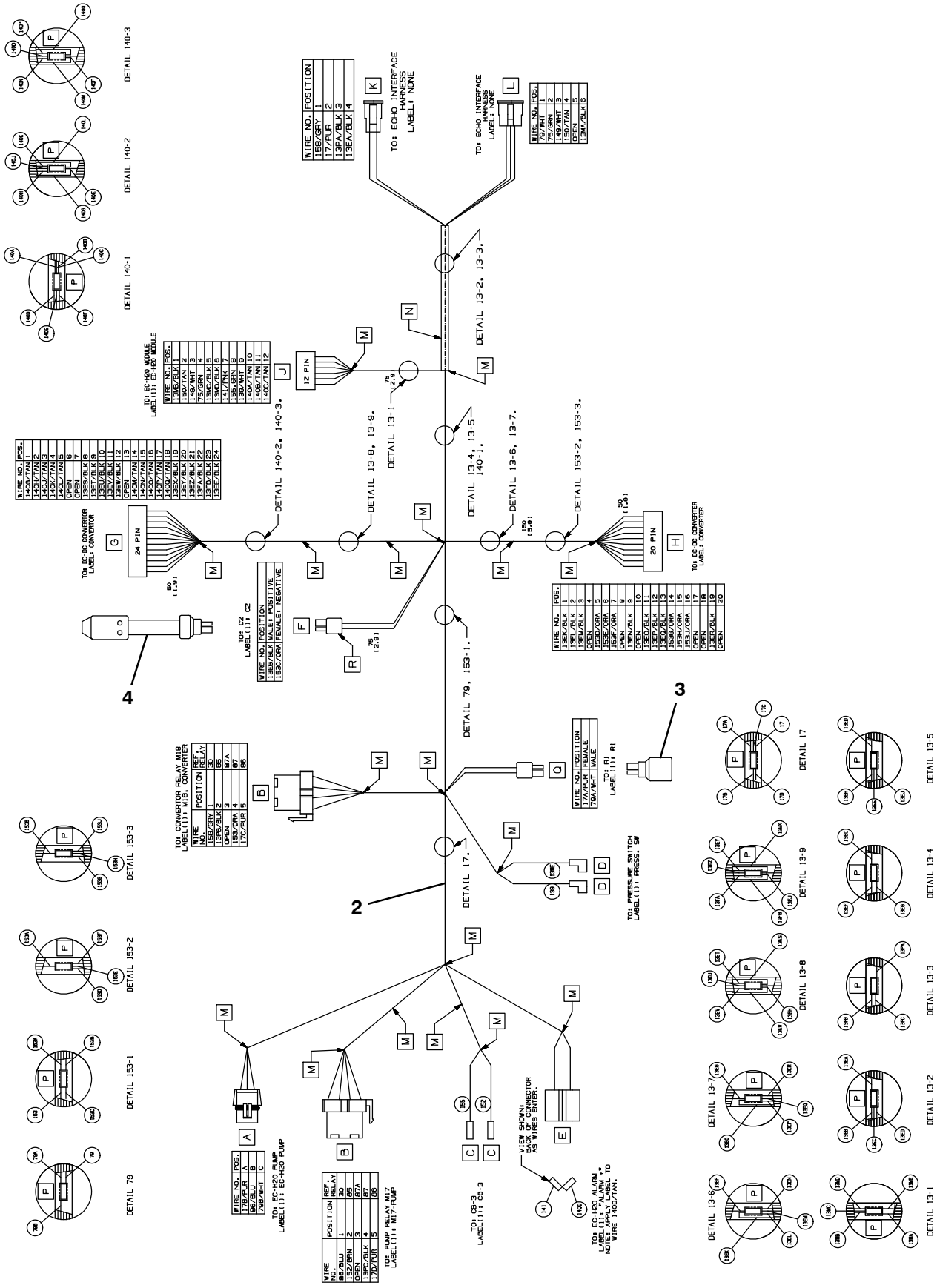

356038

Fig. 22 – ec–H20 Wire Harnesses Group

Ref.	Part No.	Serial Number	Description	Qty.
1	1071947	(000000–)	Harness, Wire [Ec–H2o, Mako, 2.0l & Dsl]	1
2	1060871	(000000–)	Harness, Wire [Ec–H2o]	1
3	1060880	(000000–)	Resistor, Ele, Plug [430 , 2w]	1
4	1060881	(000000–)	Capacitor, Plug [4700uf, 25v]	1

Fig. 23 – Backup Alarm Kit

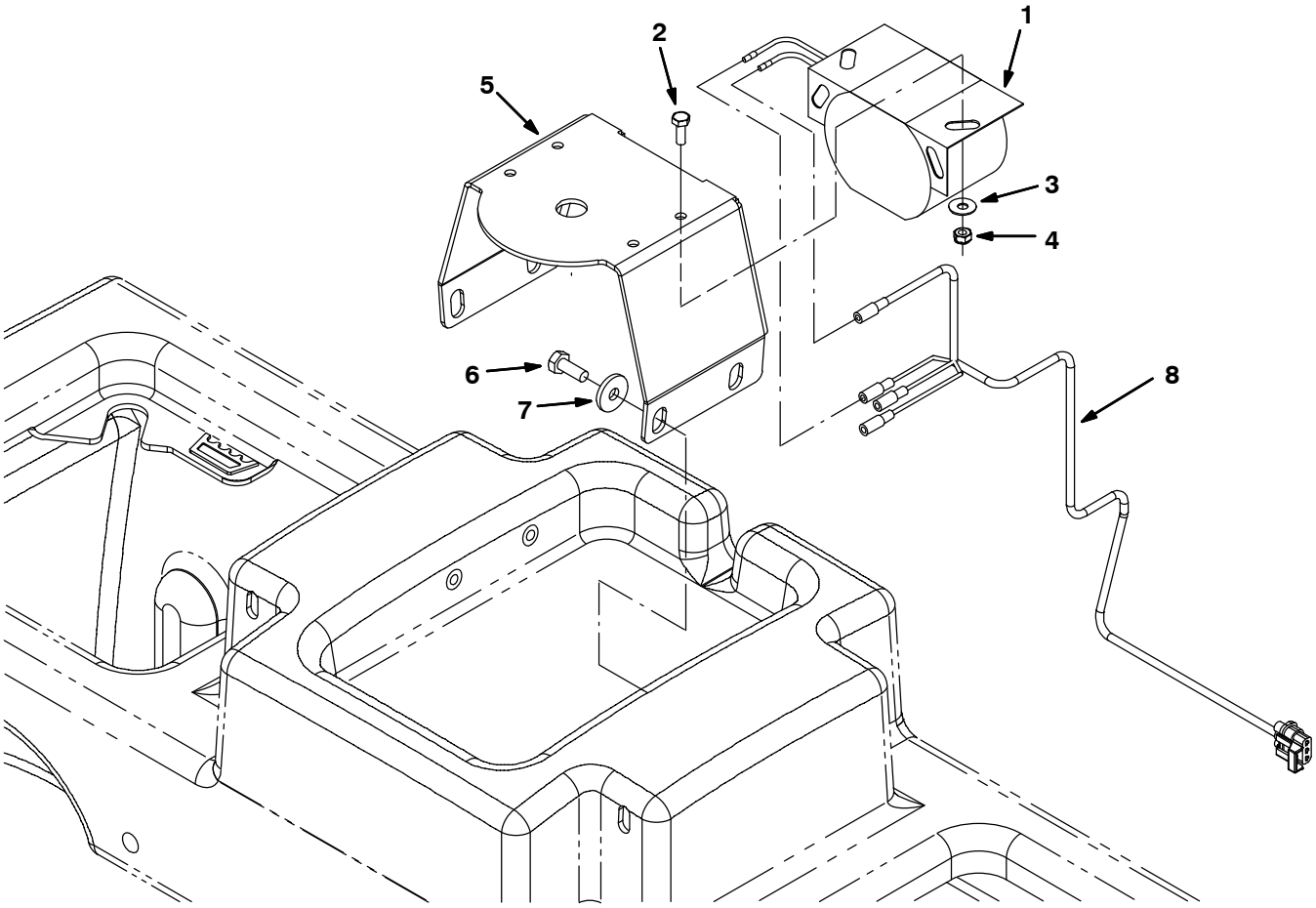

354473

	Ref.	Part No.	Serial Number	Description	Qty.
▽		9001321	(000000–)	Alarm Kit, Backup, Ci [M20 And T20]	1
▲	1	9007131	(000000–)	Alarm Assy, Backup, 12/48Vdc	1
▲	2	24196	(000000–)	Screw, Pan, Phl, M5 X 0.80 X 20, Ss	2
▲	3	19066	(000000–)	Washer, Flat, 10	2
▲	4	09739	(000000–)	Nut, Hex, Lock, M5 X 0.80, Nl, Ss	2
▲	5	1019445	(000000–)	Bracket, Sppt, Strobe Light	1
▲	6	09740	(000000–)	Screw, Hex, M8 X 1.25 X 20, Ss	4
▲	7	1017218	(000000–)	Washer, Flat, 0.32b 1.00d .12, Ss	4
▲	8	1019971	(000000–)	Harness, Warning / Backup [M20 & T20]	1

Fig. 24 – Light Kit, Flashing

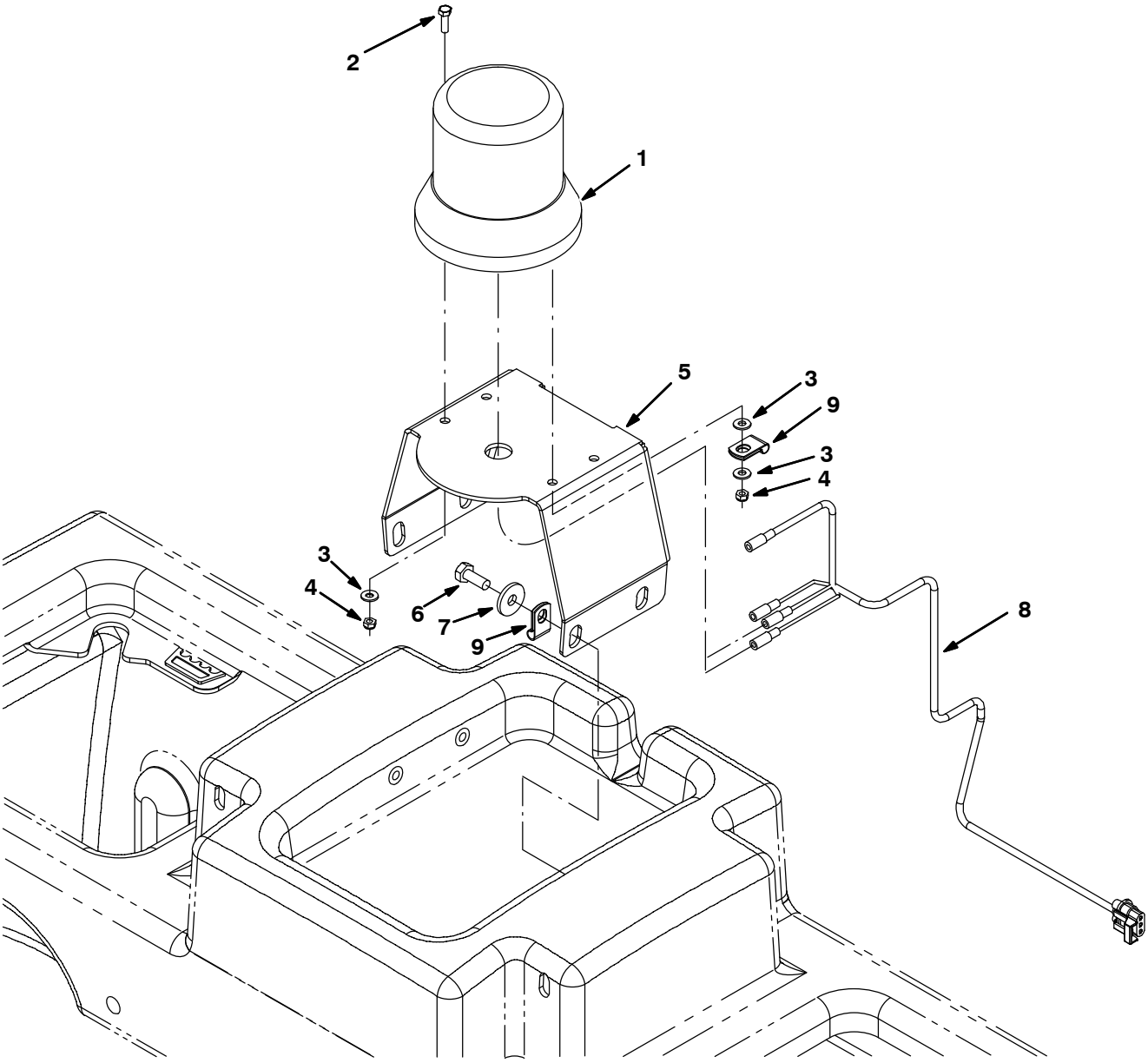

354475

Fig. 24 – Light Kit, Flashing

	Ref.	Part No.	Serial Number	Description	Qty.
▽		9001327	(000000–)	Light Kit, Flsh, Ci [M20 And T20]	1
▲▽	1	1017248	(000000–)	Lamp, Flasher, Amb [12–48 Vdc]	1
▲▲		9000879	(000000–)	Lens, Lamp, Amb, Strobe/Flasher	1
▲▲		9000846	(000000–)	Lamp, Bulb, Flsh	1
▲▲		1027800	(000000–)	Lens, Blue, Option, F/ Strobe / Flsh Light	1
▲▲		1027798	(000000–)	Lens, Red, Option, F/ Strobe / Flsh Light	1
▲		55272	(000000–)	Terminal, Bullet, Mal, .157d, 12ga	2
▲	2	24196	(000000–)	Screw, Pan, Phl, M5 X 0.80 X 20, Ss	2
▲	3	19066	(000000–)	Washer, Flat, 10	2
▲	4	09739	(000000–)	Nut, Hex, Lock, M5 X 0.80, Nl, Ss	2
▲	5	1019445	(000000–)	Bracket, Sppt, Strobe Light	1
▲	6	09740	(000000–)	Screw, Hex, M8 X 1.25 X 20, Ss	4
▲	7	1017218	(000000–)	Washer, Flat, 0.32b 1.00d .12, Ss	4
▲	8	1019971	(000000–)	Harness, Warning / Backup [M20 & T20]	1
▲	9	46236	(000000–)	Clamp, Cable, Stl, 0.25D X 0.56W, 1Hole	2

Fig. 25 – Light Kit, Strobe

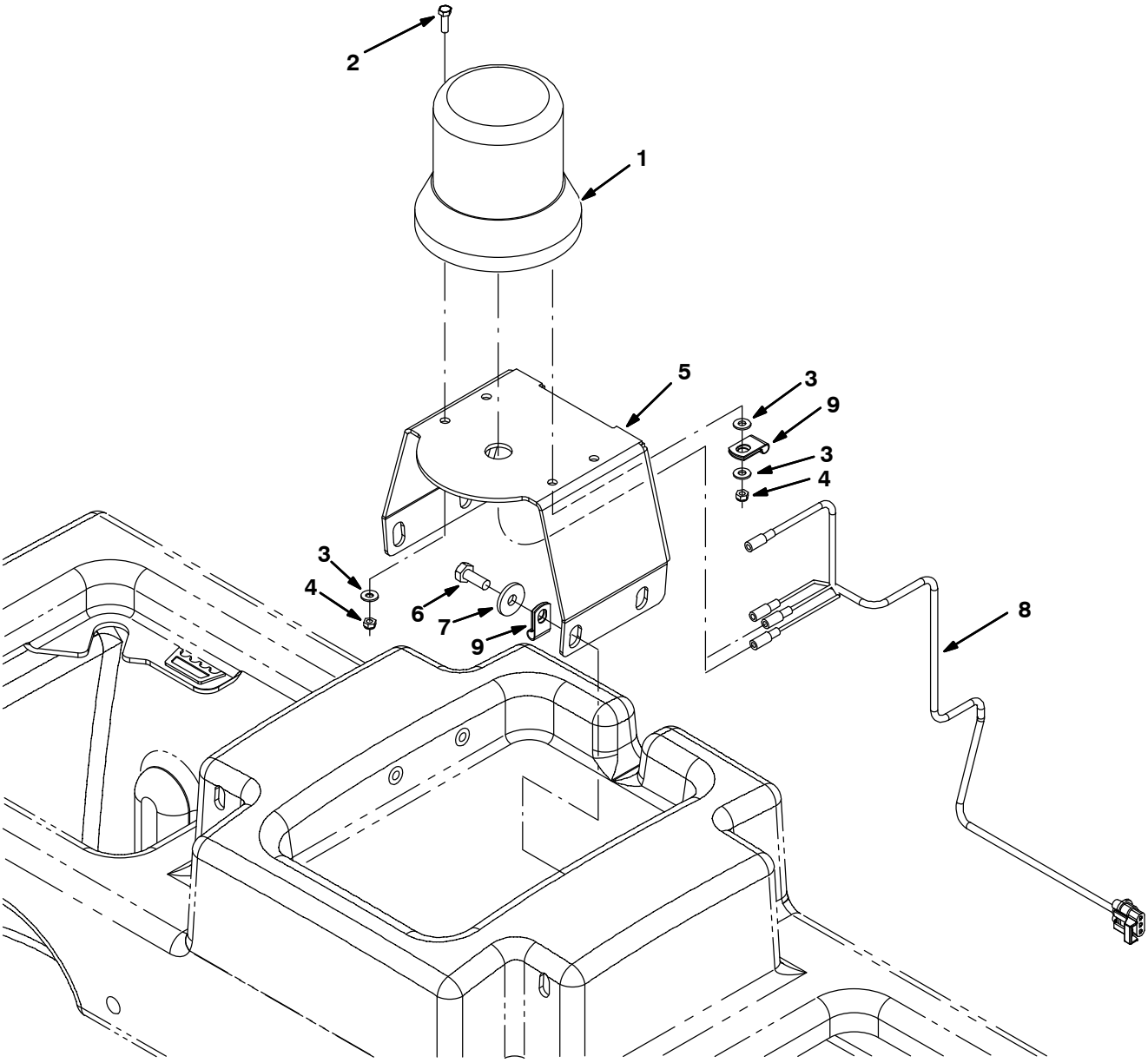

354475

Fig. 25 – Light Kit, Strobe

	Ref.	Part No.	Serial Number	Description	Qty.
▽		9001331	(000000–)	Light Kit, Strobe, Ci [M20 And T20]	1
▲▽	1	1017250	(000000–)	Lamp Strobe, Amb [12–48 Vdc]	1
▲▲		9000879	(000000–)	Lens, Lamp, Amb, Strobe/Flasher	1
▲▲		9000845	(000000–)	Lamp, Bulb, Strobe	1
▲▲		1027800	(000000–)	Lens, Blue, Option, F/ Strobe / Flsh Light	1
▲▲		1027798	(000000–)	Lens, Red, Option, F/ Strobe / Flsh Light	1
▲		55272	(000000–)	Terminal, Bullet, Mal, .157d, 12ga	2
▲	2	24196	(000000–)	Screw, Pan, Phl, M5 X 0.80 X 20, Ss	2
▲	3	19066	(000000–)	Washer, Flat, 10	2
▲	4	09739	(000000–)	Nut, Hex, Lock, M5 X 0.80, Nl, Ss	2
▲	5	1019445	(000000–)	Bracket, Sppt, Strobel Light	1
▲	6	09740	(000000–)	Screw, Hex, M8 X 1.25 X 20, Ss	4
▲	7	1017218	(000000–)	Washer, Flat, 0.32b 1.00d .12, Ss	4
▲	8	1019971	(000000–)	Harness, Warning / Backup [M20 & T20]	1
▲	9	46236	(000000–)	Clamp, Cable, Stl, 0.25D X 0.56W, 1Hole	2

Fig. 26 – Light Kit, Flashing Overhead Guard

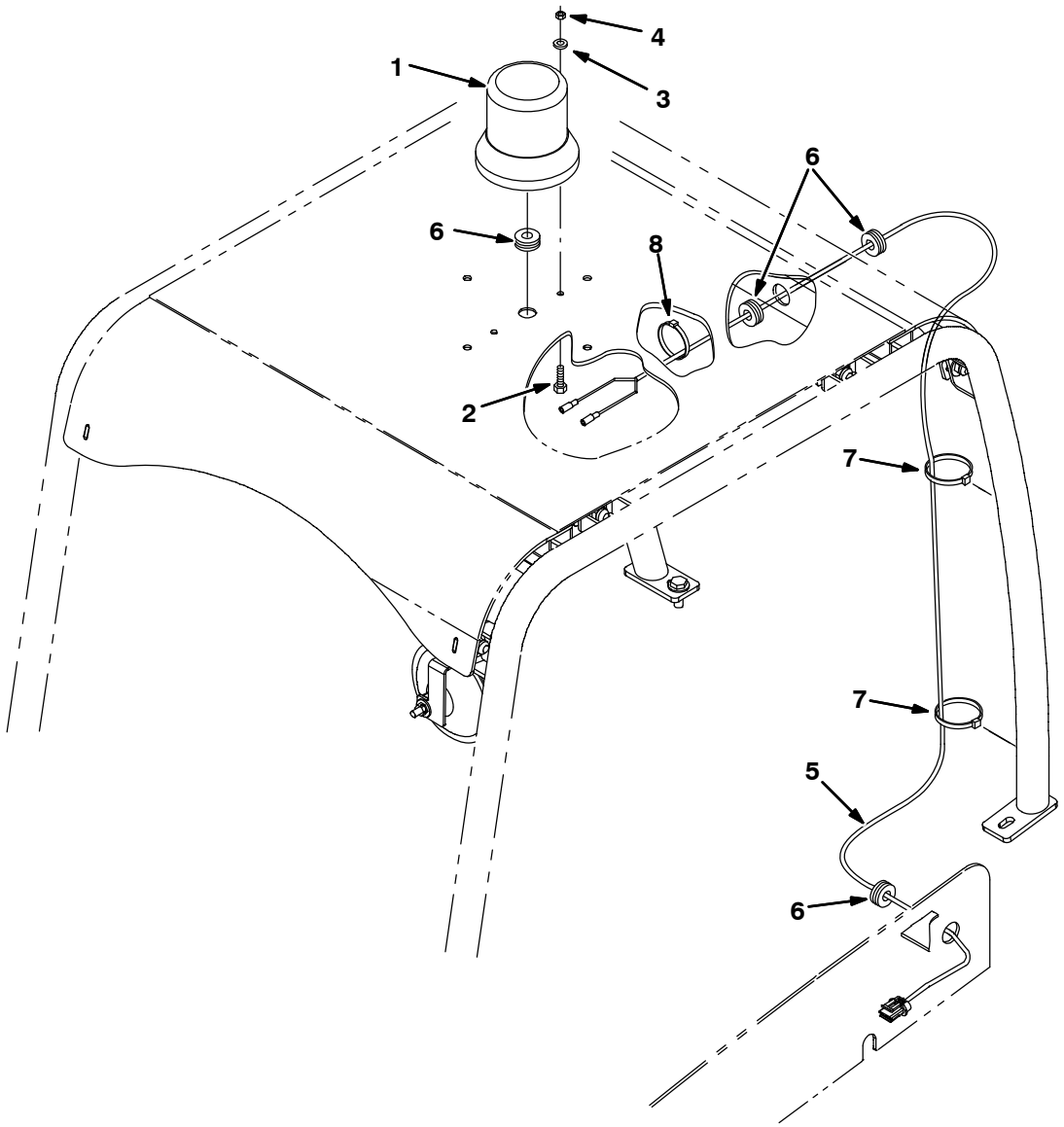

354477

	Ref.	Part No.	Serial Number	Description	Qty.
▽		9001718	(000000–)	Light Kit, Flsh, W/Ohg, Ci[M20 And T20]	1
▲▽	1	1017248	(000000–)	Lamp, Flasher, Amb [12–48 Vdc]	1
▲▲		9000879	(000000–)	Lens, Lamp, Amb, Strobe/Flasher	1
▲▲		9000846	(000000–)	Lamp, Bulb, Flsh	1
▲▲		1027800	(000000–)	Lens, Blue, Option, F/ Strobe / Flsh Light	1
▲▲		1027798	(000000–)	Lens, Red, Option, F/ Strobe / Flsh Light	1
▲		55272	(000000–)	Terminal, Bullet, Mal, .157d, 12ga	2
▲	2	24196	(000000–)	Screw, Pan, Phl, M5 X 0.80 X 20, Ss	2
▲	3	19066	(000000–)	Washer, Flat, 10	2
▲	4	09739	(000000–)	Nut, Hex, Lock, M5 X 0.80, Nl, Ss	2
▲	5	1019647	(000000–)	Harness, Warning / Ohg [M20]	1
▲	6	10632–17	(000000–)	Grommet, Rbr, 0.50id, F/0.8h, .12 Matl	4
▲	7	763115	(000000–)	Tie, Cable, 6.0l, 1.25d Max	4
▲	8	49266	(000000–)	Tie, Cable, Nyl, 07.3l .19w 1.8 Max D	2

Fig. 27 – Light Kit, Strobe Overhead Guard

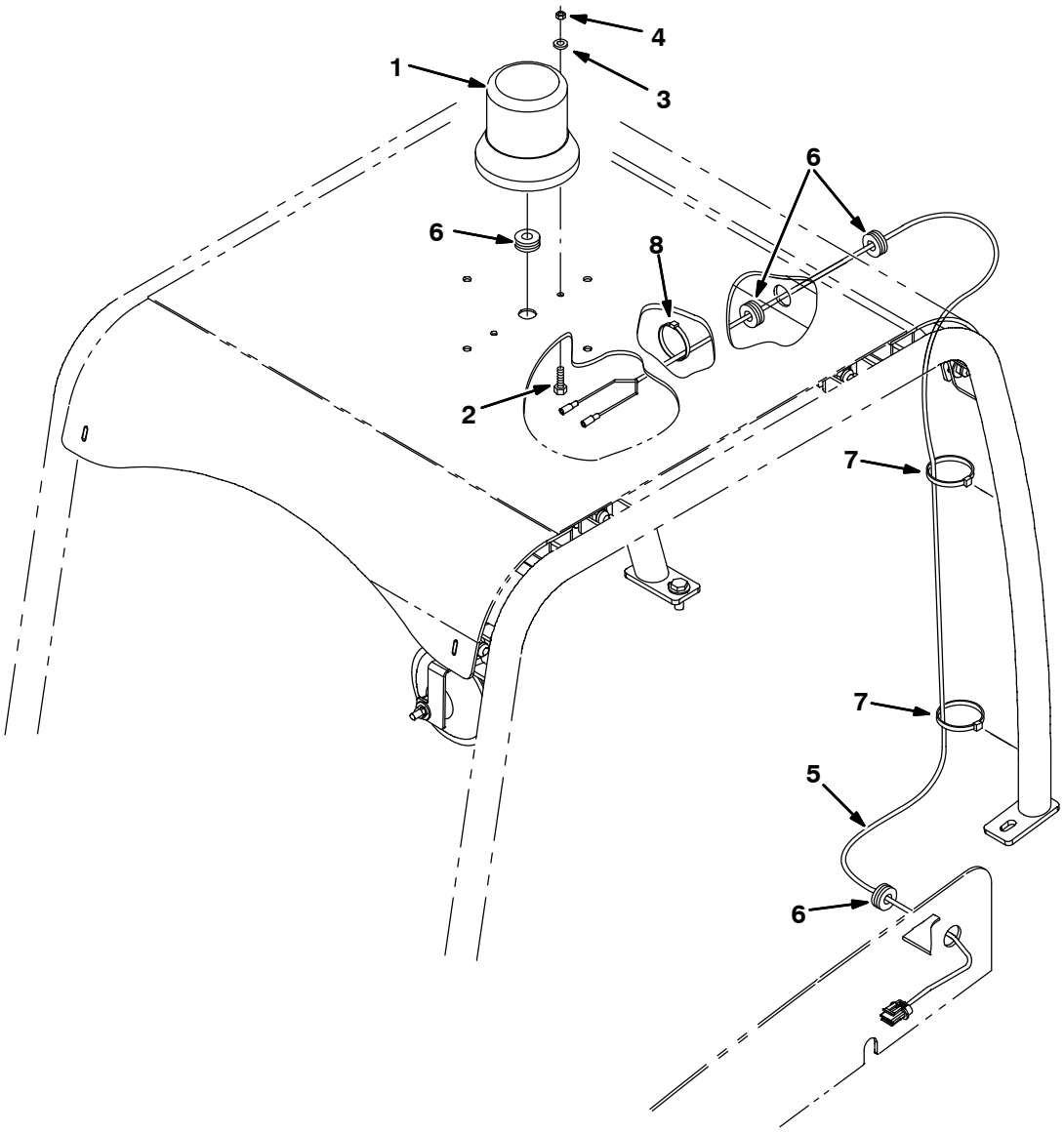

354477

	Ref.	Part No.	Serial Number	Description	Qty.
▽		9001717	(000000–)	Light Kit, Strobe, W/Ohg, Ci [M20 And T20]	1
▲▽	1	1017250	(000000–)	Lamp Strobe, Amb [12–48 Vdc]	1
▲▲		9000879	(000000–)	Lens, Lamp, Amb, Strobe/Flasher	1
▲▲		9000845	(000000–)	Lamp, Bulb, Strobe	1
▲▲		1027800	(000000–)	Lens, Blue, Option, F/ Strobe / Flsh Light	1
▲▲		1027798	(000000–)	Lens, Red, Option, F/ Strobe / Flsh Light	1
▲		55272	(000000–)	Terminal, Bullet, Mal, .157d, 12ga	2
▲	2	24196	(000000–)	Screw, Pan, Phl, M5 X 0.80 X 20, Ss	2
▲	3	19066	(000000–)	Washer, Flat, 10	2
▲	4	09739	(000000–)	Nut, Hex, Lock, M5 X 0.80, Nl, Ss	2
▲	5	1019647	(000000–)	Harness, Warning / Ohg [M20]	1
▲	6	10632–17	(000000–)	Grommet, Rbr, 0.50id, F/0.8h, .12 Matl	4
▲	7	763115	(000000–)	Tie, Cable, 6.0l, 1.25d Max	4
▲	8	49266	(000000–)	Tie, Cable, Nyl, 07.3l .19w 1.8 Max D	2

Fig. 28 – Overhead Guard Kit

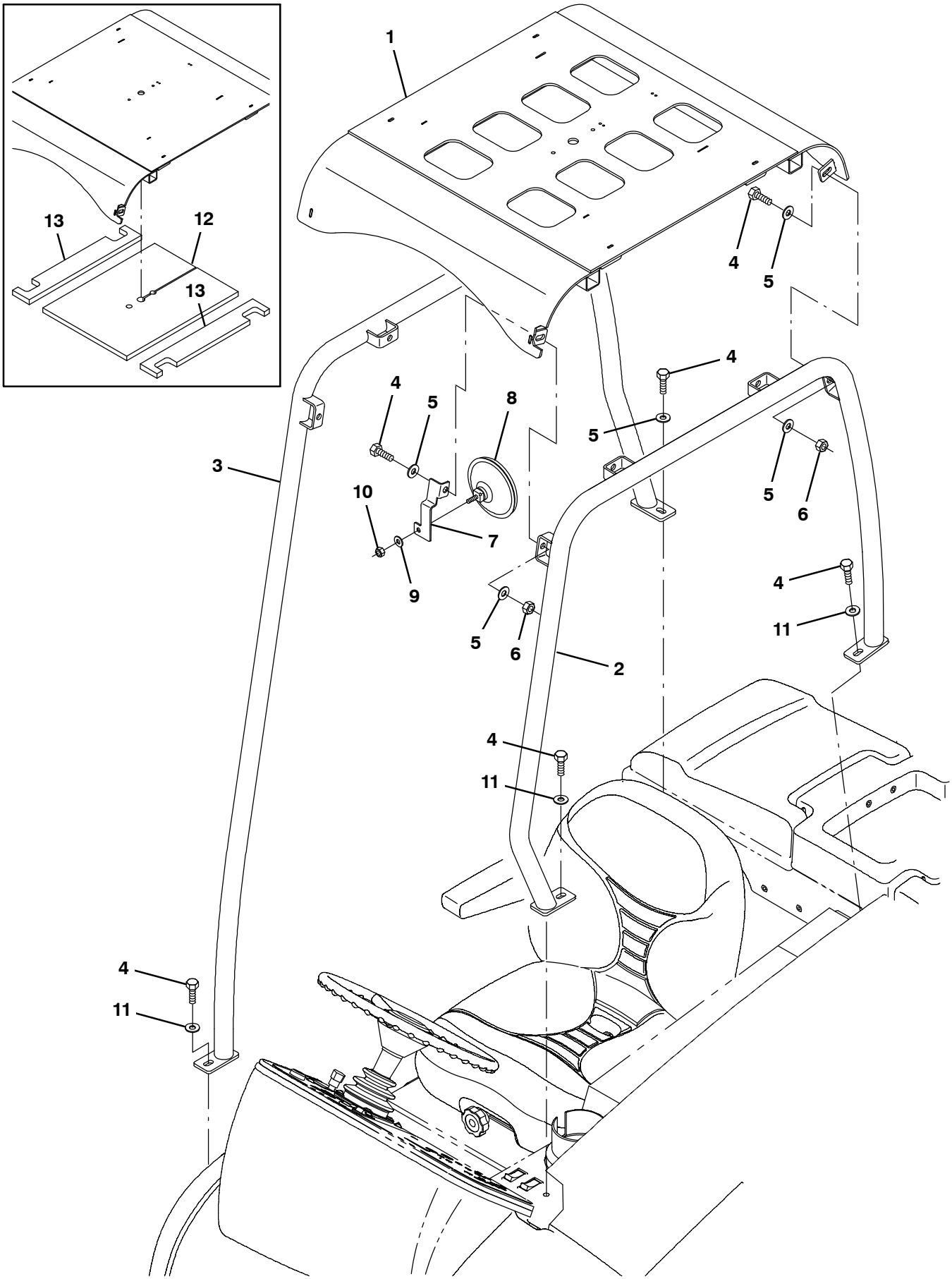

354478

Fig. 28 – Overhead Guard Kit

	Ref.	Part No.	Serial Number	Description	Qty.
▽		9001314	(000000–)	Ohg Kit, Ci [M20 And T20]	1
▲	1	1022276	(000000–)	Guard Wldt, Top, Ohg	1
▲	2	1069241	(000000–)	Tube Wldt, Leg, Ohg, Lh, Pntd	1
▲	3	1069253	(000000–)	Tube Wldt, Leg, Ohg, Rh, Pntd	1
▲	4	03192	(000000–)	Screw, Hex, M10 X 1.5 X 30, 8.8	12
▲	5	32492	(000000–)	Washer, Flat, 0.38 Std	17
▲	6	41430	(000000–)	Nut, Hex, Lock, M10 X 1.5, Nl	8
▲	7	1023879	(000000–)	Bracket, Mtg, Mirror, Rearview	1
▲	8	1050295	(000000–)	Mirror, Convex, 0.50D	1
▲	9	32491	(000000–)	Washer, Flat, 0.31, Std	1
▲	10	19313	(000000–)	Nut, Hex, Std, .31–18	1
▲	11	1014563	(000000–)	Washer, Flat, 0.40b 1.12d .12, Ss	3
	12	1032830	(000000–006913)	Insulation	1
	13	1032831	(000000–006913)	Insulation	2

Fig. 29 – Telemetry Group

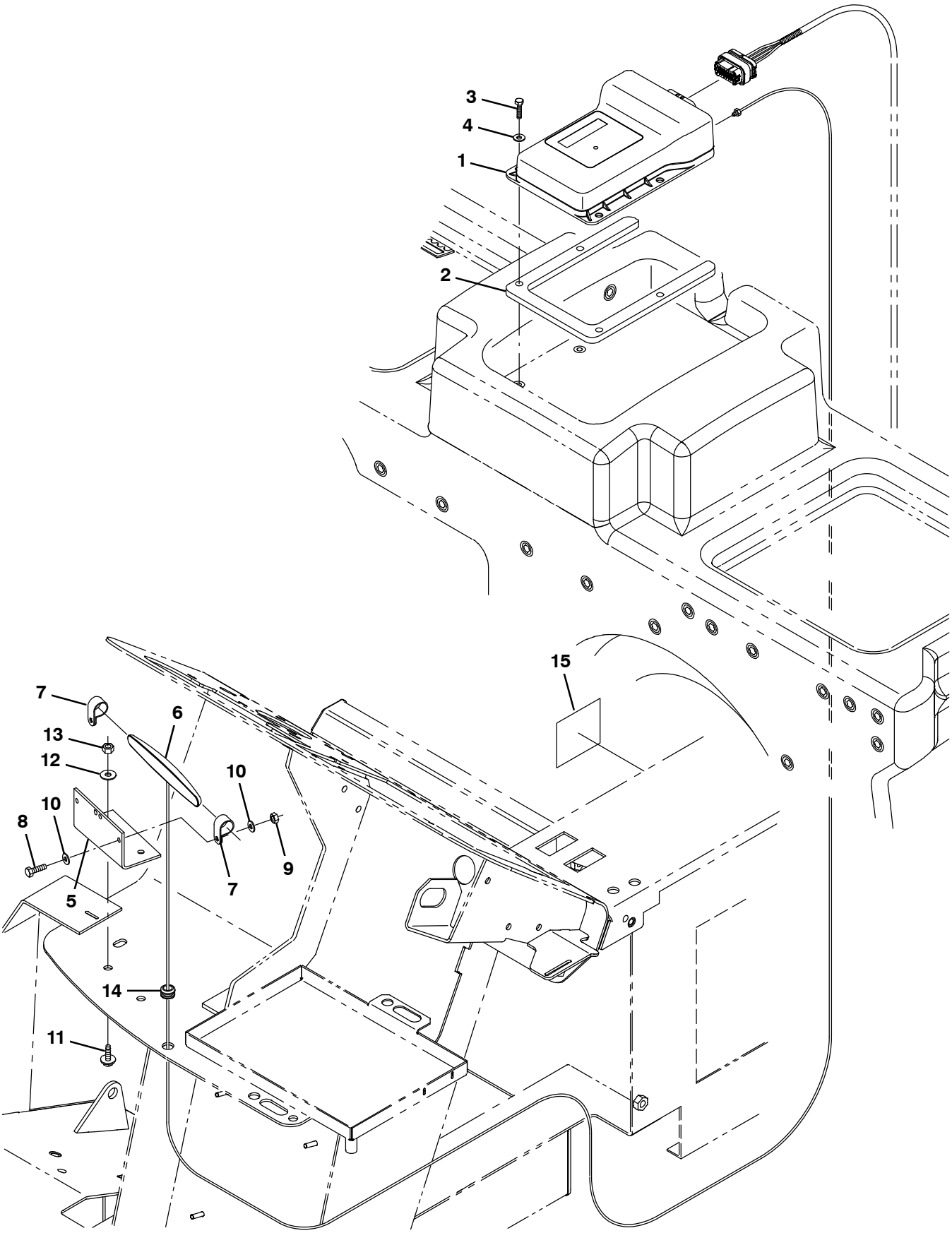

356266 – NA

Fig. 29 – Telemetry Group

Ref.	Part No.	Serial Number	Description	Qty.
1	9010085	(000000–)	Control Box Assy Kit, Replmt, Telem [USA]	1
1	9010086	(000000–)	Control Box Assy Kit, Replmt, Telem [CAN]	1
2	1071062	(000000–)	Bracket, Spacer, Controlbox	1
3	09252	(000000–)	Screw,Hex, M5 X 0.80 X 29, 8.8	4
4	01683	(000000–)	Washer, Flat, 10, Ss	4
5	1070402	(000000–)	Angle, mtg, Antenna, Telem	1
6	1070659	(000000–)	Antenna, Telem, 70 In [Gprs]	1
7	140916	(000000–)	Clamp, Cable, Nyl, 0.62D, Nat	2
8	24199	(000000–)	Screw, Hex, M5 X 0.80 X 16, Ss	2
9	06549	(000000–)	Nut, Hex, Lock, M5 X 0.80, Nl	2
10	01683	(000000–)	Washer, Flat, 10, Ss	4
11	1040467	(000000–)	Screw, hex, H6 X 1.00 X 20, 9.8, Sems	2
12	01684	(000000–)	Washer, Flat, 0.27B 0.69D .05, Ss	2
13	08712	(000000–)	Nut, hex, Lock, M6 X 1.00, Nl, Ss	2
14	10632–12	(000000–)	Grommet, Rbr, 0.38id, F/0.5H, .12 Matl	1
15	1069580	(000000–)	Label, Opertnl, Telem [Fcc/Ic]	1

Fig. 30 – Electrical Wire Harness Group, Gasoline/LPG Engine Adapter Harness with Telemetry

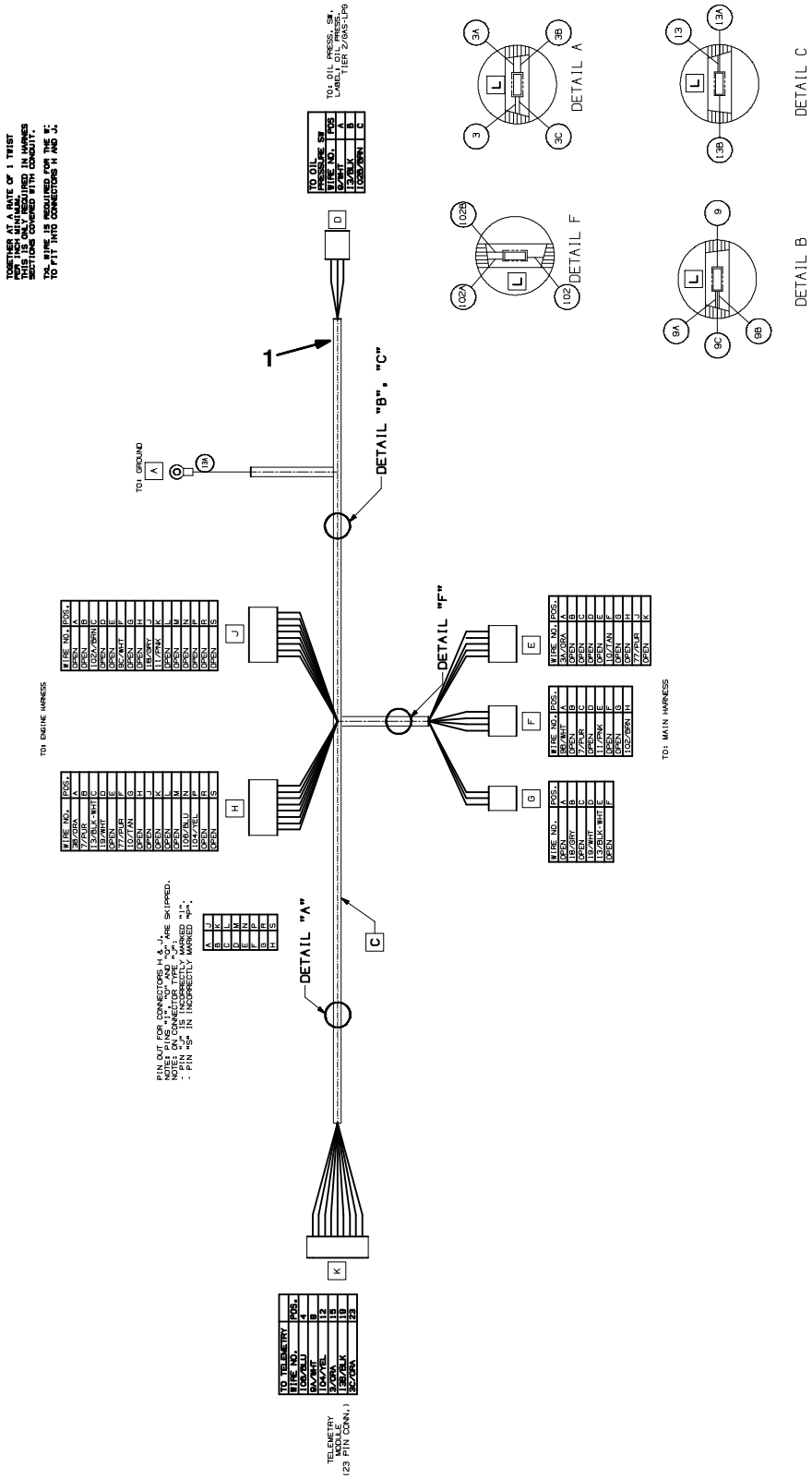

354389–354459

Ref.	Part No.	Serial Number	Description	Qty.
1	1071641	(002000–)	Harness, Wire, Gas/Lpg [Telemetry]	1

Fig. 31 – Vacuum Wand Kit (000000–002406)

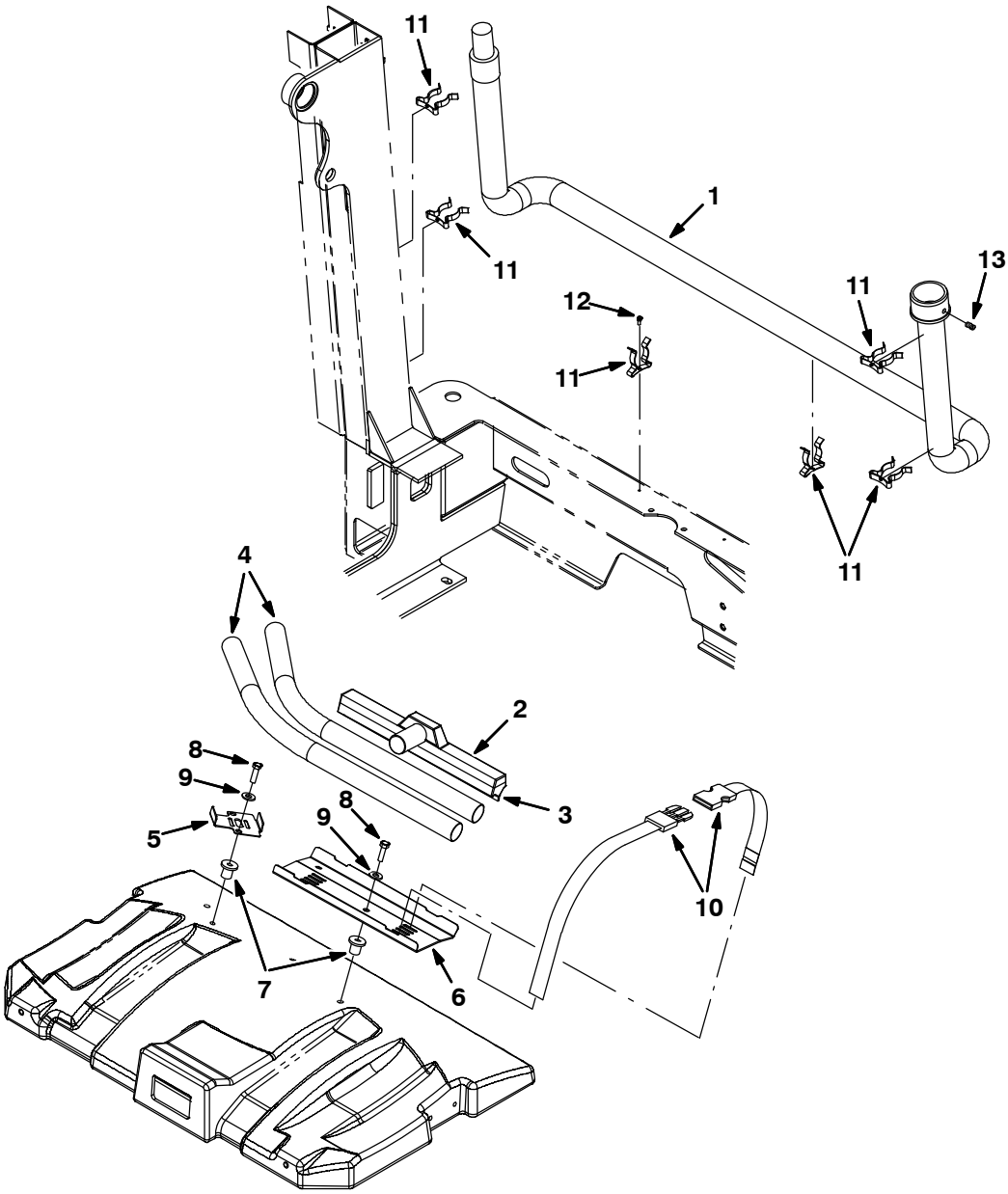

354479

	Ref.	Part No.	Serial Number	Description	Qty.
▽		9001334	(000000–002406)	Wand Kit, Vacuum, Ci [M20]	1
▲	1	69657	(000000–002406)	Hose Assy, W/2cuff, 1.5d 84l [Vacwand]	1
▲	2	63451	(000000–002406)	Nozzle, Wand, Plstc, 14.0lg	1
▲	3	63430	(000000–002406)	Shoe, Plstc, Sqge, 14.0	1
▲	4	63448	(000000–002406)	Tube, Wand, Vacuum, Metal [1pick=1box]	1
▲	5	1030549	(000000–002406)	Bracket, Mtg, Vacuum Wand	1
▲	6	1026146	(000000–002406)	Plate, Mtg, Vacuum Wand	1
▲	7	397648	(000000–002406)	Nut, Isolator, .38–16 Wall Th .015–.437	4
▲	8	21198	(000000–002406)	Screw, Hex, .38–16 X 1.25, 5	4
▲	9	32492	(000000–002406)	Washer, Flat, 0.38 Std	4
▲	10	367974	(000000–002406)	Strap, Pyp, 0.07 1.0w 18.5l, W/ Buckle	3
▲	11	67004	(000000–002406)	Clip, Grip, Finger, 1.00–1.88d White,Vyl	6
▲	12	55845	(000000–002406)	Screw, Hex, M5 X 0.8 X 16, Fmg	6
▲	13	69659	(000000–002406)	Plunger	1

Fig. 32 – Vacuum Wand Kit (002407–)

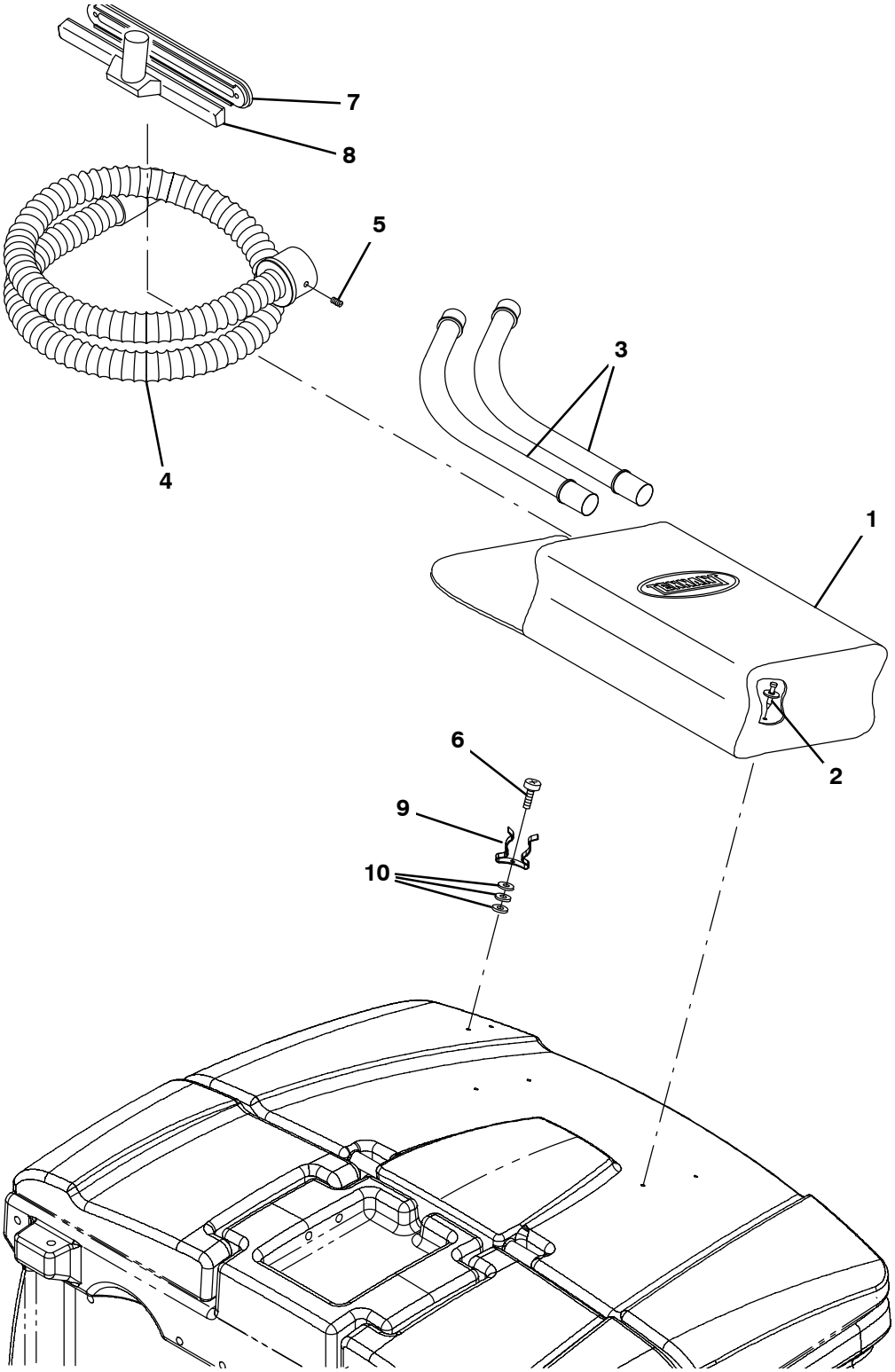

354659

Fig. 32 – Vacuum Wand Kit (002407–)

	Ref.	Part No.	Serial Number	Description	Qty.
▽		9001334	(002407–)	Wand Kit, Vacuum, Ci [M20]	1
▲	1	65580	(002407–)	Bag, Power	1
▲	2	72968	(002407–)	Rivet, Plstc, .250d X 0.90	4
▲	3	63448	(002407–)	Tube, Wand, Vacuum, Metal	1
▲	4	69657	(002407–)	Hose Assy, W/2cuff, 1.5d 084l [Vacwand]	1
▲	5	69659	(002407–)	Plunger	1
▲	6	55845	(002407–)	Screw, Hex, M5 X 0.80 X 16, Fmg	2
▲	7	63430	(002407–)	Shoe, Plstc, Sqge, 14.0	1
▲	8	63451	(002407–)	Nozzle, Wand, Plstc, 14.0l	1
▲	9	67004	(002407–)	Clip, Grip, Finger, 1.00–1.88d White,Vyl	2
▲	10	19064	(002407–)	Washer, Flat, 06	6

Fig. 33 – Spray Nozzle Kit

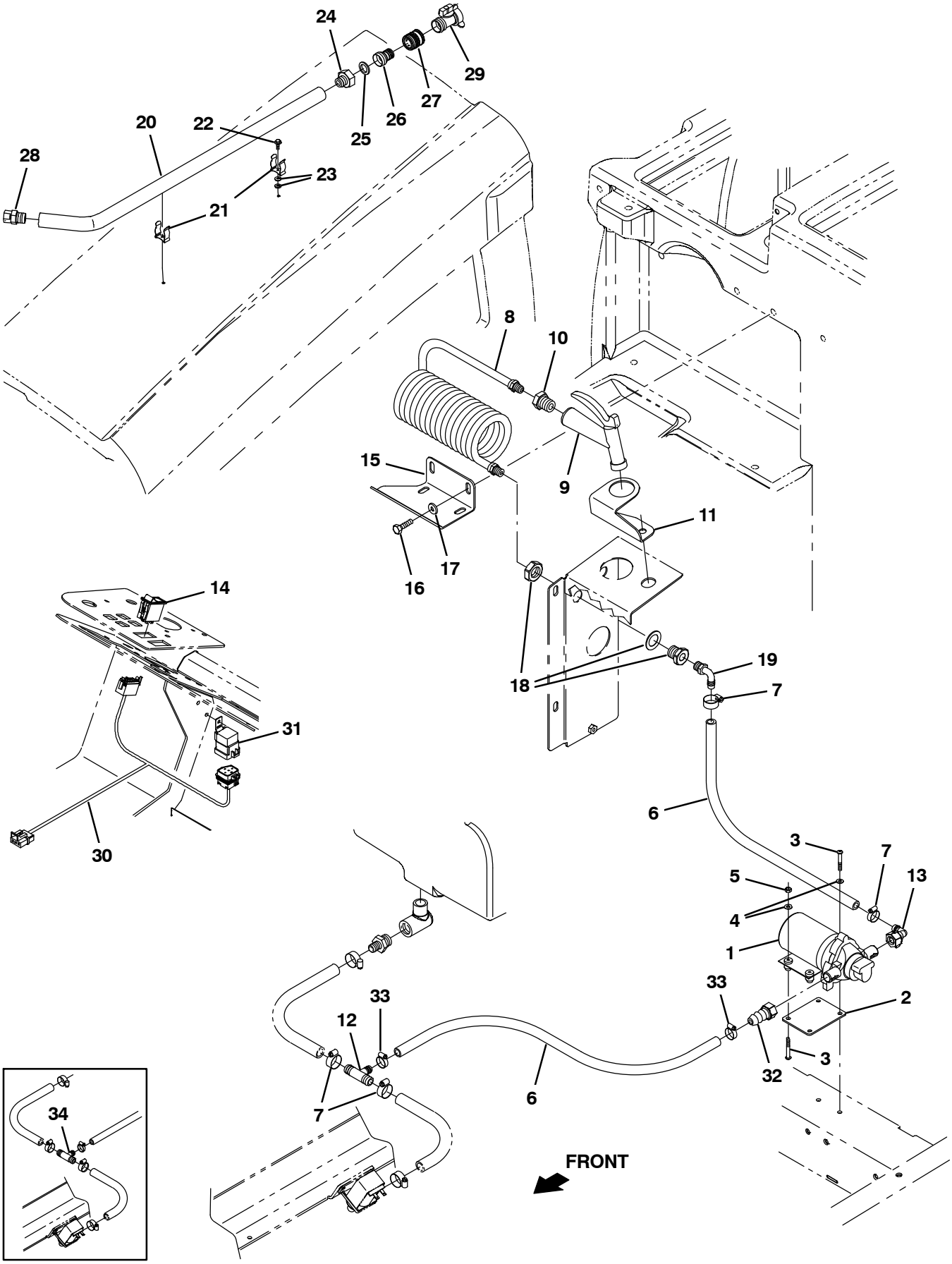

354480

Fig. 33 – Spray Nozzle Kit

	Ref.	Part No.	Serial Number	Description	Qty.
▽		9001310	(000000–)	Nozzle Kit, Spray, Ci	1
▲	1	1026743	(000000–)	Pump, Diaphragm (See Breakdowns)	1
▲	2	1027007	(000000–)	Plate, Mtg, Pump	1
▲	3	06939	(000000–)	Screw, Pan, M5 X 0.80 X 45, 4.8	4
▲	4	19066	(000000–)	Washer, Flat, #10	4
▲	5	06549	(000000–)	Nut, Hex, Lock, M5 X 0.80, Nl	2
▲	6	1015045	(000000–)	Hose, Afmkt, Pvc, Brd, 0.75id, 08ft, Clr	1
▲	7	63810	(000000–)	Clamp, Hose, Wormdrive, 0.56–1.06d, .56w	4
▲	8	1019250	(000000–)	Hose, Water, Coil	1
▲	9	769785	(000000–)	Nozzle, Spray, Gun	1
▲	10	1027976	(000000–)	Fitting, Brs, Str, Pf06/Pm12	1
▲	11	1027237	(000000–)	Bracket, Mtg, Spray Handle	1
▲	12	1015486	(007260–)	Fitting, Plstc, Tee, Bm08/Bm10/Bm10, Br	1
▲	13	1018499	(000000–)	Fitting, Plstc, E90, Bm08/Pf08s, Swivel	1
▲	14	398500	(000000–)	Switch, Rocker, Dpdt On/None/On	1
▲	15	1029790	(000000–)	Bracket, Mtg, Spray Wand [FaST, Conv]	1
▲	16	09740	(000000–)	Screw, Hex, M8 X 1.25 X 20, Ss	2
▲	17	1017218	(000000–)	Washer, Flat, 0.32b 1.00d .12, Ss	2
▲	18	1027978	(000000–)	Fitting, Brs, Str, Pf06/Pf06 Bh	1
▲	19	64778	(000000–)	Fitting, Plstc, E90, Bm08/Pm06	1
▲	20	1029055	(000000–)	Wand, Clean–Out	1
▲	21	1029057	(000000–)	Clip, Grip, Finger, .875–1.25	2
▲	22	20394	(000000–)	Screw, Hex, #10–16 X 0.62, Fmg [Ab]	2
▲	23	01683	(000000–)	Washer, Flat, #10, Ss	4
▲	24	375321	(000000–)	Fitting, Brs, Str, Pm08/Garden Hose	1
▲	25	01316	(000000–)	Washer, Flat, 0.66b 1.00d .12, Rbr	1
▲	26	1029153	(000000–)	Nipple, Hose	1
▲	27	1029155	(000000–)	Coupling, Nozzle, Spray	1
▲	28	1029156	(000000–)	Nozzle	1
▲	29	1029399	(000000–)	Valve, Shutoff	1
▲	30	1021881	(000000–)	Harness, Spray, Nozzle	1
▲	31	56186	(000000–)	Relay, 12vdc, 40a, Spdt N/O	1
▲	32	1018495	(000000–)	Fitting, Plstc, Str, Bm08/Pf08s, Swivel	1
▲	33	54333	(000000–)	Clamp, Hose, Wormdrive, 0.31–0.88d, .31w	2
	34	385644	(000000–007259)	Fitting, Plstc, Tee, Bm08/Bm12/Bm12, Br	1

Fig. 34 – Transport Kit

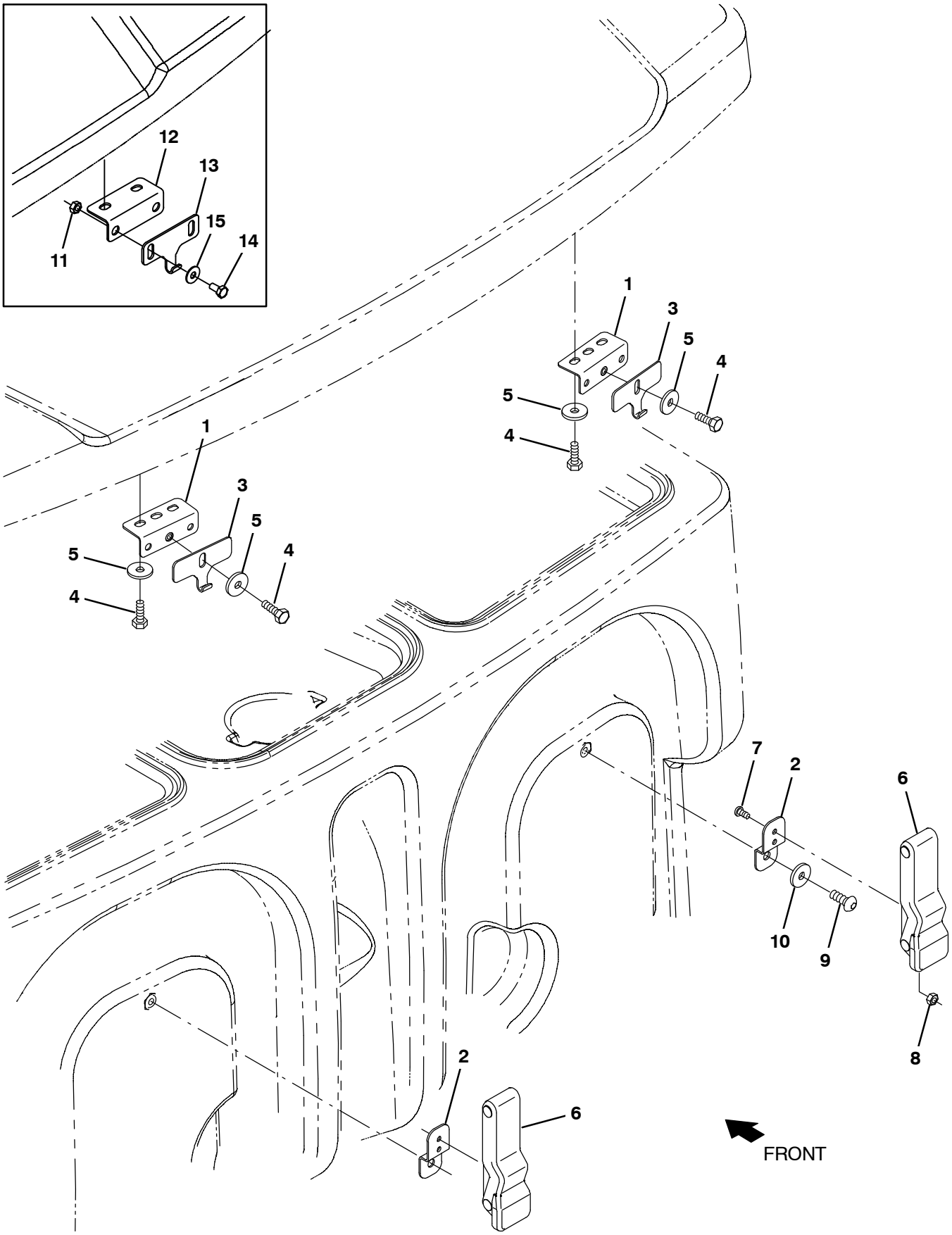

354481

Fig. 34 – Transport Kit

	Ref.	Part No.	Serial Number	Description	Qty.
▽		9014867	(002473–)	Transport Kit, Ci [M20/M30}	1
▲	1	1040800	(002473–)	Bracket, Latch, Cover	2
▲	2	1020526	(000000–)	Bracket, Retaining, Hose	2
▲	3	1040634	(002473–)	Plate, Hook, Latch	2
▲	4	09744	(002473–)	Screw, Hex, M6 X 1.00 X 12, Ss	6
▲	5	01684	(002473–)	Washer, Flat, 0.27b 0.69d .05, Ss	6
▲	6	360824	(000000–)	Latch	2
▲	7	09200	(000000–)	Screw, Pan, Phl, M5 X 0.80 X 12, Ss	4
▲	8	09739	(000000–)	Nut, Hex, Lock, M5 X 0.80, Nl, Ss	4
▲	9	393135	(000000–)	Screw, Btn, M8 X 1.25 X 20, Blk	2
▲	10	32491	(000000–)	Washer, Flat, 0.31, Std	2
	11	08712	(000000–002472)	Nut, Hex, Lock, M6 X 1.00, Nl, Ss	4
	12	1032869	(000000–002472)	Bracket, Latch, Cover	2
	13	1032896	(000000–002472)	Plate, Hook, Latch, [M20]	2
	14	09744	(000000–002472)	Screw, Hex, M6 X 1.0 X 12, Ss	4
	15	01684	(000000–002472)	Washer, Flat, 0.25, Ss	4

Fig. 35 – Squeegee Guard Kit

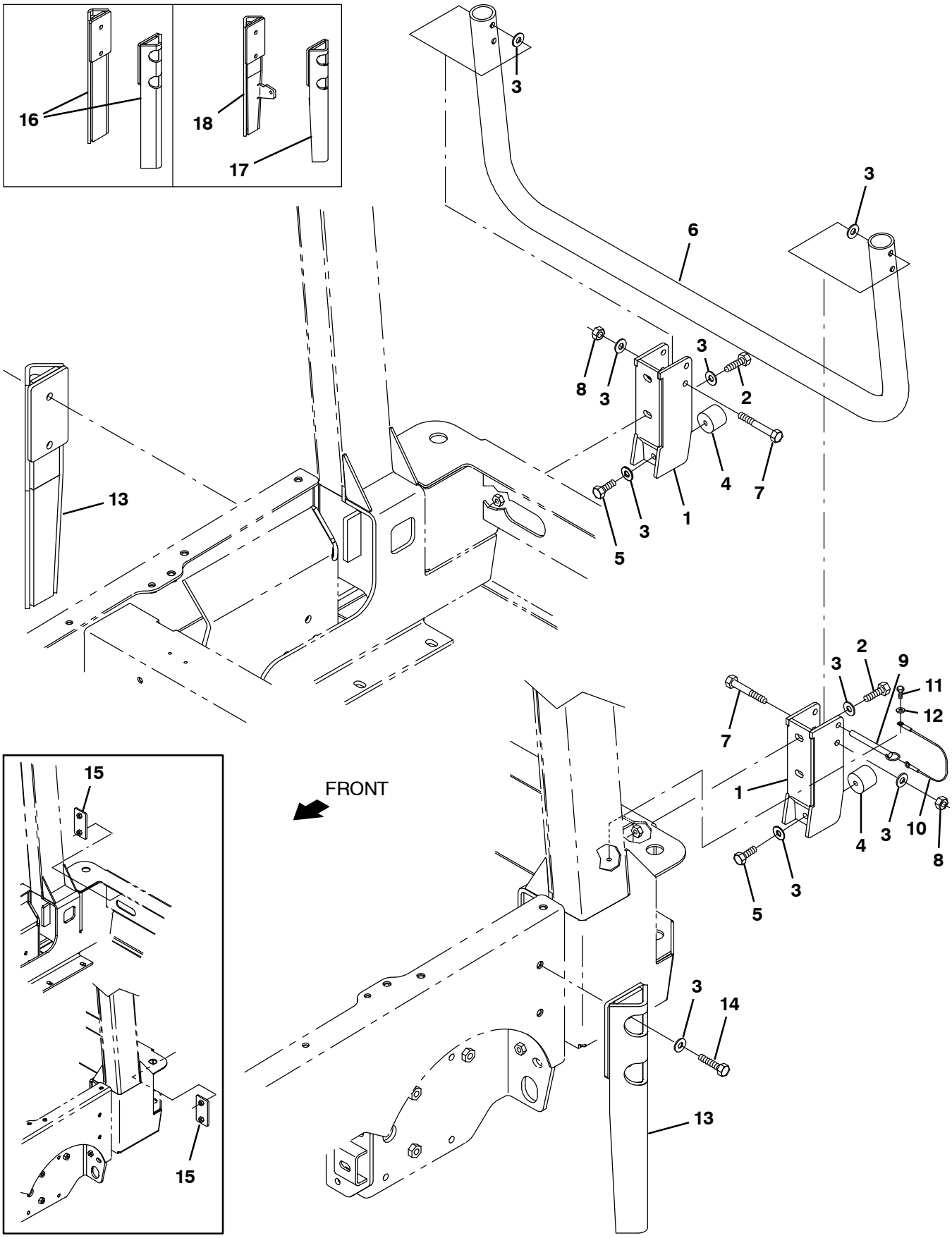

354482 – NA

Fig. 35 – Squeegee Guard Kit

	Ref.	Part No.	Serial Number	Description	Qty.
▽		9001338	(000000–)	Guard Kit, Sqge, Ci [M20]	1
▲	1	1027560	(000000–)	Bracket Wldt, Guard, Sqge	2
▲	2	39284	(000000–)	Screw, Hex, M10 X 1.5 X 35, 8.8	4
▲	3	32492	(000000–)	Washer, Flat, 0.38 Std	14
▲	4	1024977	(000000–)	Bumper, Ure, 1.50d 1.25l	2
▲	5	21196	(000000–)	Screw, Hex, .38–16 X 0.88, 5	2
▲	6	1056195	(000000–)	Guard Wldt, Pntd [M20/T20]	1
▲	7	06965	(000000–)	Screw, Hex, M10 X 1.5 X 80, 8.8	2
▲	8	41430	(000000–)	Nut, Hex, Lock, M10 X 1.5, Nl	2
▲	9	369359	(000000–)	Pin, Hitch, .375d X 3.12l, Pl	1
▲	10	57702	(000000–)	Cable, Glv .06d 012.0l .26eye /.26eye	1
▲	11	09738	(000000–)	Screw, Hex, M5 X 0.8 X 12, Ss	1
▲	12	01683	(000000–)	Washer, Flat, #10, Ss	1
▲	13	1045444	(xxxxxx–)	Guard Wldt, Sqge [M20/T20/M30]	2
▲	14	06962	(000000–)	Screw, Hex, M10 X 1.5 X 45, 8.8	4
	15	1029543	(000000–004292)	Plate, Mtg	2
	16	1025663	(000000–002435)	Guard Wldt, Sqge	2
	17	1040863	(002436–xxxxxx)	Guard Wldt, Sqge [M20/T20 Lh, M30 Rh]	1
	18	1040871	(002436–xxxxxx)	Guard Wldt, Sqge [M20/T20 Rh, M30 Lh]	1

Fig. 36 – Engine Radiator Screen Kit (003039–005999)

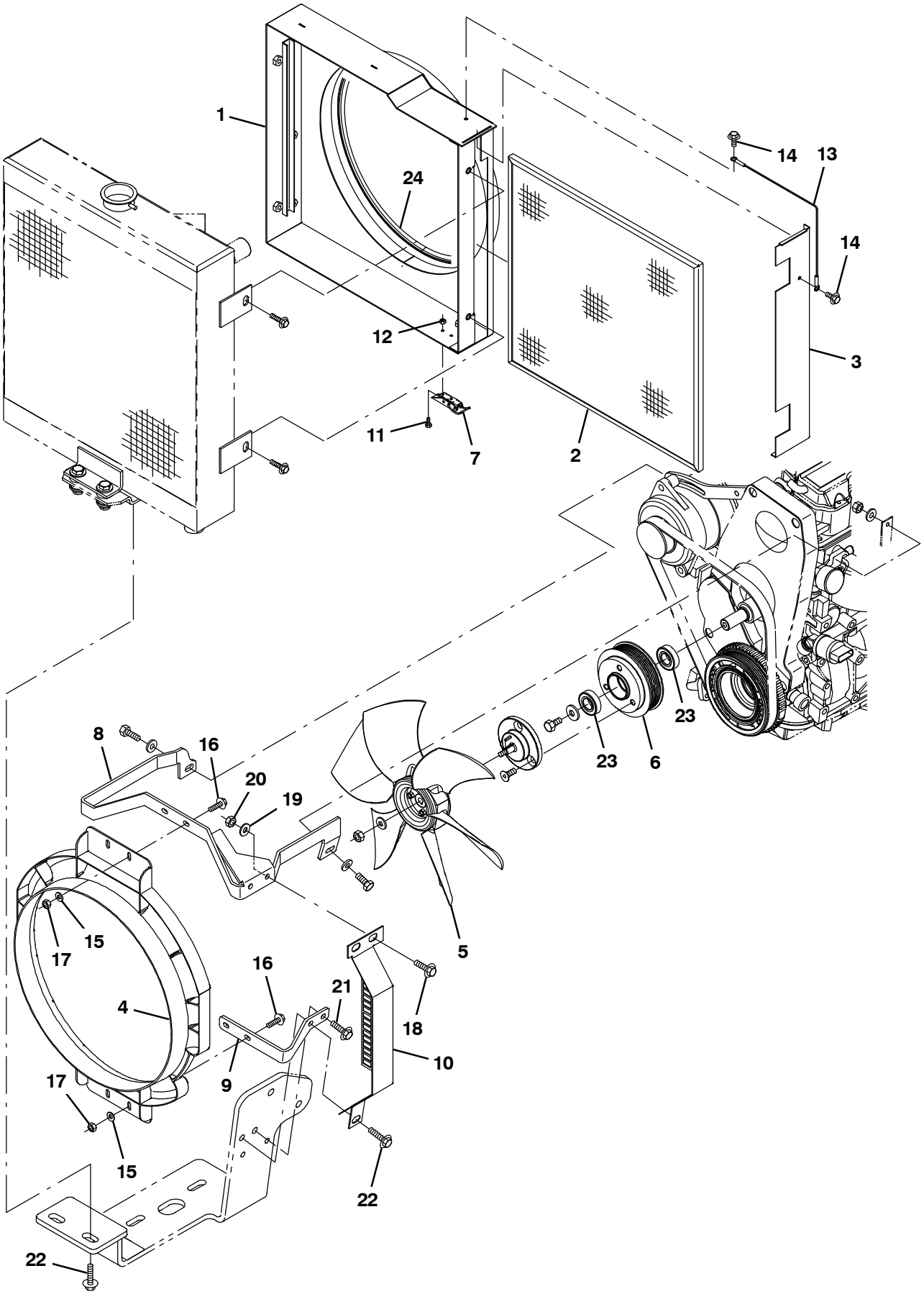

356399

Fig. 36 – Engine Radiator Screen Kit (03039–005999)

	Ref.	Part No.	Serial Number		Description	Qty.
▽		9010988	(003039–005999)	)	Rad Screen Kit, Replmt [M/T20,M30 G/Lp]	1
▲	1	1071041	(003039–005999)	)	Bracket Wldt, Radiator, Fan, Gas/Lpg	1
▲	2	1071033	(003039–005999)	)	Frame Wldt, Screen, Rad	1
▲	3	1071047	(003039–005999)	)	Plate, Cover, Screen	1
▲	4	1054428	(003039–005999)	)	Shroud, Fan	1
▲	5	1031566	(003039–005999)	)	Fan, Cooling, 14.1d, 6 Blade, 0.5b Taper	1
▲	6	1072505	(003039–005999)	)	Sheave, Mach [Gm1.6l 2615rpm Fan]	1
▲	7	1051534	(003039–005999)	)	Concept, Latch	1
▲	8	1058777	(003039–005999)	)	Bracket, Shrd, Fan, Upper, Sppt, Gas/Lpg	1
▲	9	1058753	(003039–005999)	)	Bracket, Shrd, Fan, Lower, Gas/Lpg	1
▲	10	1064443	(003039–005999)	)	Bracket, Shrd, Radiator, Gas/Lpg, Ce	1
▲	11	1020234	(003039–005999)	)	Screw, Hex, M4 X 0.70 X 10, Ss	2
▲	12	02850	(003039–005999)	)	Nut, Hex, Lock, M4 X 0.70, Nl	2
▲	13	57702	(003039–005999)	)	Cable, Glv .06d 012.0l .26eye /.26eye	1
▲	14	361339	(003039–005999)	)	Screw, Hex, M6 X 1.00 X 16, Fmg	2
▲	15	32483	(003039–005999)	)	Washer, Flat, 0.25, Sae	6
▲	16	1036892	(003039–005999)	)	Screw, Hex, M6 X 1.00 X 25, 9.8, Sems	4
▲	17	08708	(003039–005999)	)	Nut, Hex, Lock, M6 X 1.00, Nl	4
▲	18	1037346	(003039–005999)	)	Screw, Hex, M8 X 1.25 X 25, 9.8, Sems	2
▲	19	32491	(003039–005999)	)	Washer, Flat, 0.31, Std	2
▲	20	08709	(003039–005999)	)	Nut, Hex, Lock, M8 X 1.25, Nl	2
▲	21	1037354	(003039–005999)	)	Screw, Hex, M8 X 1.25 X 30, 9.8, Sems	3
▲	22	1037355	(003039–005999)	)	Screw, Hex, M8 X 1.25 X 35, 9.8, Sems	1
▲	23	1055377	(003039–005999)	)	Bearing, Ball, 20mm B 42mm D 12mm W	2
▲	24	1048166	(003039–005999)	)	Seal, Afmkt, Bulb, Str, 0.58d 08ft	1

Fig. 37 – Fire Extinguisher Kit

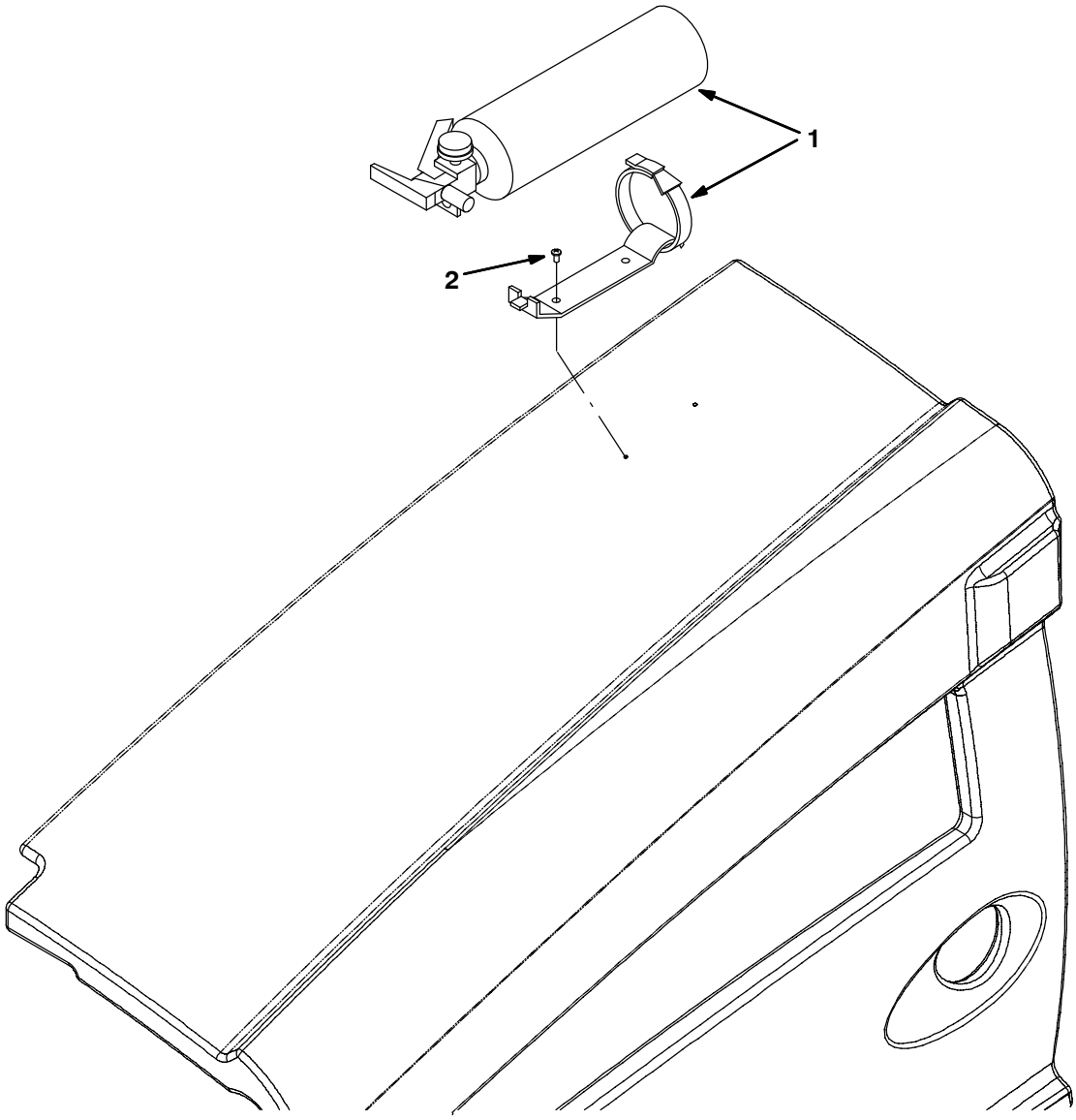

354484

Ref.	Part No.	Serial Number	Description	Qty.
	9001316	(000000–)	Extinguisher Kit, Fire, Ci [M20 And T20]	1
1	25312	(000000–)	Extinguisher, Fire, 2.5 Lb Dry	1
2	382320	(000000–)	Screw, Pan, #12–16 X 0.50, F/ Plstc	2

Fig. 38 – Documentation Group

Ref.	Part No.	Serial Number	Description	Qty.
	331380	(000000–)	Manual, Oprtr [M20 Gas/Lpg En]	1
	1032578	(000000–)	Instr, Maint, Wall Chart [M20]	1
	331382	(000000–)	Manual, Oprtr [M20 Gas/Lpg, Es, Na]	1
	331383	(000000–)	Manual, Oprtr [M20 Gas/Lpg, Fr, Na]	1
	331381	(000000–)	Manual, Parts [M20 Gas/Lpg En]	1
	331385	(000000–)	Manual, Service [M20 En]	1
	1027759	(000000–)	Video, Oprtr, Dvd [W/Checklist M20]	1
	372863	(000000–001999)	Manual, Service, Eng[Gm1.6l Em Cert]	1
	371790	(000000–001999)	Manual, Service, Eng [Gm1.6l]	1
	9003926	(002000–)	Manual, Eng, Cd–Rom [Tier Ii,Gm1.6l]	1
	9006257	(000000–)	Media, Cd–Rom, Training [ec–H2O Tennant]	1
	9010635	(006000–)	Manual, Service, Cd–Rom [Mit2.0l]	1

To view, print, order, download the latest Parts manual, other language Operator manuals, and Use and Care Guides (wall charts), visit:

www.tennantco.com/manual

SECTION 4

Contents **Page**

Fig. 1 – Extended Scrub Pump Breakdown, 1021210 4-2
Fig. 2 – Hydraulic Motor Breakdown, 379609 . . . 4-4
Fig. 3 – Hydraulic Pump Breakdown, 1024251 . 4-6
Fig. 4 – Hydraulic Motor Breakdown, 71729 4-8
Fig. 5 – Hydraulic Motor Breakdown, 1029379 . 4-9
Fig. 6 – Hydraulic Motor Breakdown, 53485 . . . 4-10
Fig. 7 – Hydraulic Valve Breakdown, 1018936 . 4-11
Fig. 8 – Hydraulic Valve Breakdown, 1018938 . 4-12
Fig. 9 – Hydraulic Valve Breakdown, 1037805 . 4-14
Fig. 10 – Hydraulic Valve Breakdown, 1072997 . 4-16
Fig. 11 – Hydraulic Valve Breakdown, 1020394 . 4-18
Fig. 12 – Hydraulic Valve Breakdown, 1038566 . 4-20
Fig. 13 – Hydraulic Valve Breakdown, 1072995 . 4-22
Fig. 14 – Hydraulic Steering Valve Breakdown, 1024260 4-24
Fig. 15 – Metering Solution Pump Breakdown, 73260 4-26
Fig. 16 – Water Pump Breakdown, 1026743 . . . 4-27
Fig. 17 – ec–H20 Module Assembly Breakdown, 9007882 4-28
Fig. 18 – Seat Breakdown, 1072456 4-30
Fig. 19 – FaST Injector Assembly Breakdown, 9008868 4-32

Fig. 1 – Extended Scrub Pump Breakdown, 1021210

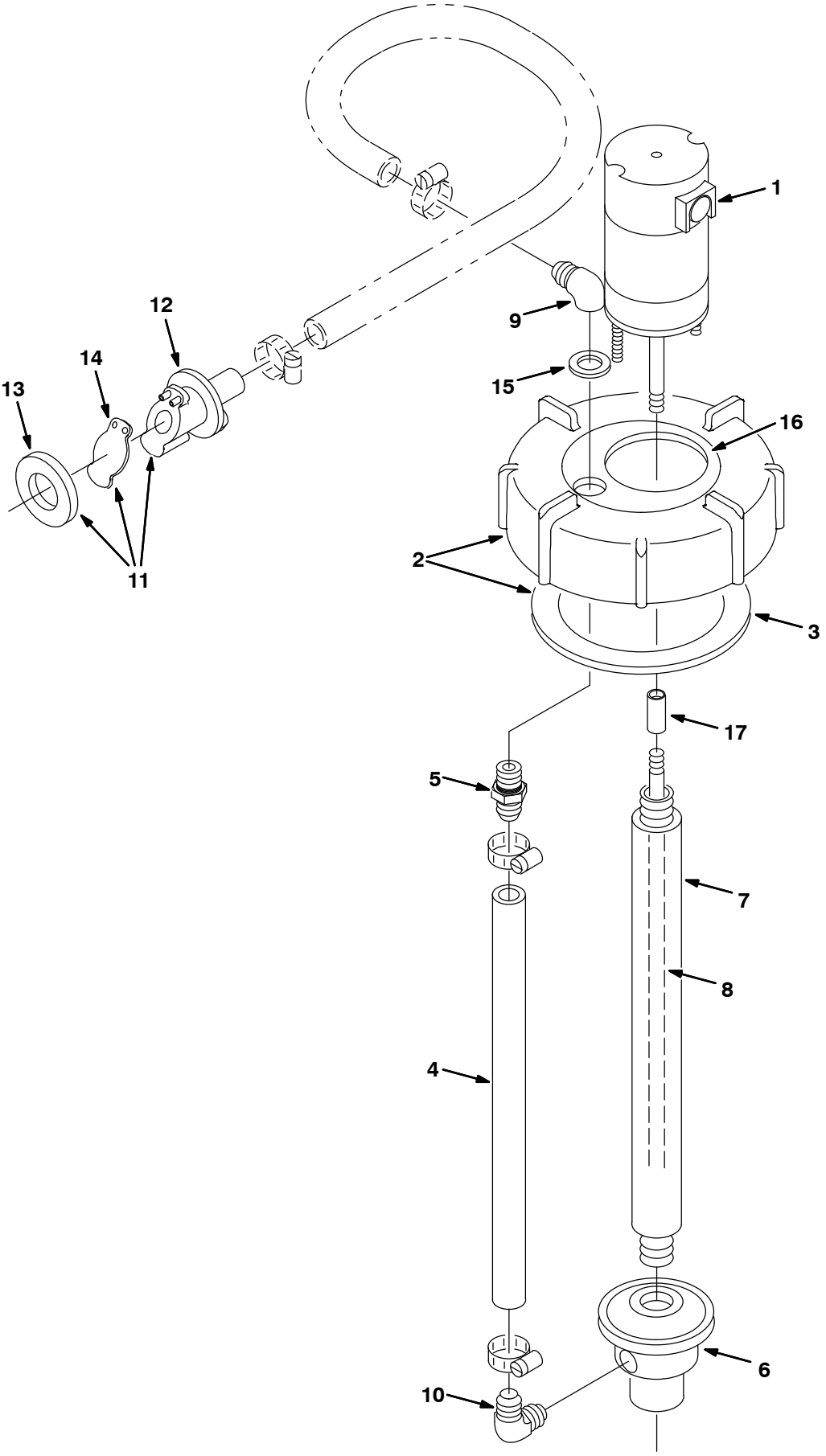

354377 – ALL

Fig. 1 – Extended Scrub Pump Breakdown, 1021210

	Ref.	Part No.	Serial Number	Description	Qty.
▽		1021210	(000000–)	Pump Assy, Column, Es	1
▲▽	1	9002708	(000000–)	Motor, Ele, 12vdc, Pump, Water	1
▲▲		78829	(000000–)	Kit, Brush, Motor, Ele	1
▲▽	2	24358	(000000–)	Cap Assy, Tank, Drain	1
▲▲	3	1031699	(000000–)	Gasket, 4.05id 5.29od .19 [Buna]	1
▲	4	78833	(000000–)	Tube, Vinyl, Pump, Water	1
▲	5	78398	(000000–)	Fitting, Plstc, Str, Bm12/Pm08, Nyl	1
▲	6	78843	(000000–)	Housing Kit, Pump, Water	1
▲	7	78836	(000000–)	Column, Pump, Water	1
▲	8	9002709	(000000–)	Shaft, Pump, Water	1
▲	9	78838	(000000–)	Fitting, E, Gr	1
▲	10	78839	(000000–)	Fitting, Plstc, E90, Pf Bm [Es Pump]	1
▲▽	11	78842	(000000–)	Kit, Valve, Check, Pump, Water	1
▲▲	12	78840	(000000–)	Valve, Check, Pump, Water	1
▲▲	13	73342	(000000–)	Gasket, .25 1.88d 1.0id [Poron]	1
▲▲	14	78841	(000000–)	Flapper, Valve, Pump, Water	1
▲	15	78830	(000000–)	Washer, Rbr	1
▲	16	22790	(000000–)	Insert, Cap, Mount, Es Pump	1
▲	17	23285	(000000–)	Sleeve, Pump, Water	1

Fig. 2 – Hydraulic Motor Breakdown, 379609

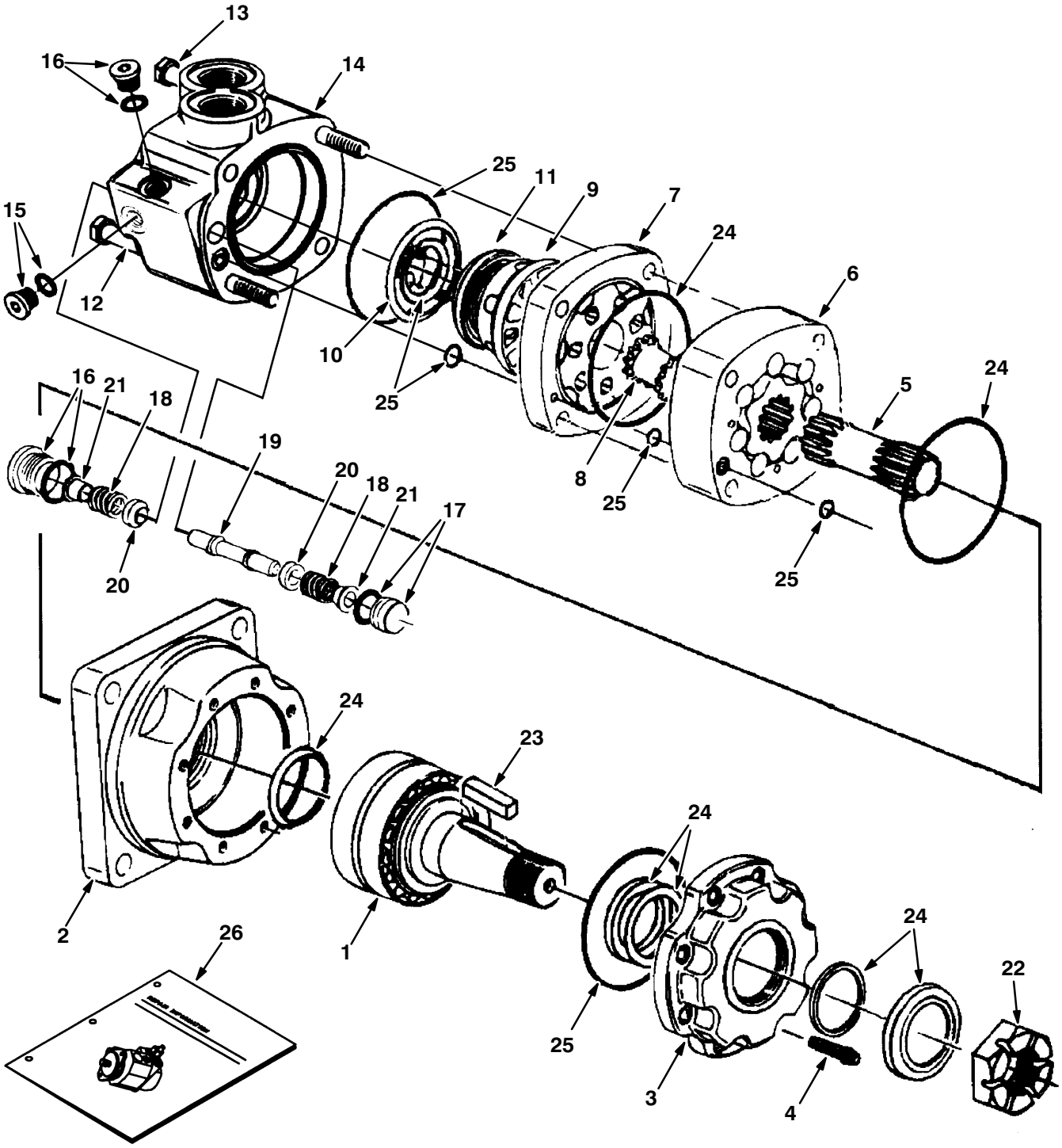

350628–09670

Fig. 2 – Hydraulic Motor Breakdown, 379609

	Ref.	Part No.	Serial Number	Description	Qty.
▽		379609	(000000–)	Motor, Hyd, Gear, [Int], 19.0 X 3000	1
▲	1	74165	(000000–)	Shaft, Motor, Hyd	1
▲	2	74166	(000000–)	Housing, Brg, Motor, Hyd	1
▲	3	74167	(000000–)	Retainer, Motor, Hyd	1
▲	4	74168	(000000–)	Screw, Cap, Motor, Hyd	8
▲	5	37616	(000000–)	Drive, Motor, Hyd	1
▲	6	37756	(000000–)	Geroler, Motor, Hyd	1
▲	7	74122	(000000–)	Plate, Valve, Motor, Hyd	1
▲	8	52405	(000000–)	Valve, Motor, Hyd	1
▲	9	74123	(000000–)	Valve, Motor, Hyd	1
▲	10	34178	(000000–)	Spring, Motor, Hyd	2
▲	11	38968	(000000–)	Ring, Motor, Hyd	1
▲	12	74125	(000000–)	Bolt, Motor, Hyd	3
▲	13	38255	(000000–)	Bolt, Motor, Hyd	1
▲	14	373297	(000000–)	Housing, Valve	1
▲	15	373298	(000000–)	Plug	1
▲	16	373260	(000000–)	Plug, Pump, Hyd, Gear	2
▲	17	373299	(000000–)	Plug	1
▲	18	373291	(000000–)	Spring	2
▲	19	373217	(000000–)	Piston, Pump, Hyd, Gear	1
▲	20	373226	(000000–)	Poppet, Pump, Hyd, Gear	2
▲	21	373236	(000000–)	Sleeve, Dashpo, Pump, Hyd, Gear	2
▲	22	45622	(000000–)	Nut, Motor, Hyd	1
▲	23	45623	(000000–)	Key, Motor, Hyd	1
▲	24	79828	(000000–)	Kit, Seal, Motor, Hyd	1
▲	25	33580	(000000–)	Kit, Seal, Motor, Hyd	1
	26	79729	(000000–)	Instr, Repair, Motor, Hyd, Gear	1

Fig. 3 – Hydraulic Pump Breakdown, 1024251

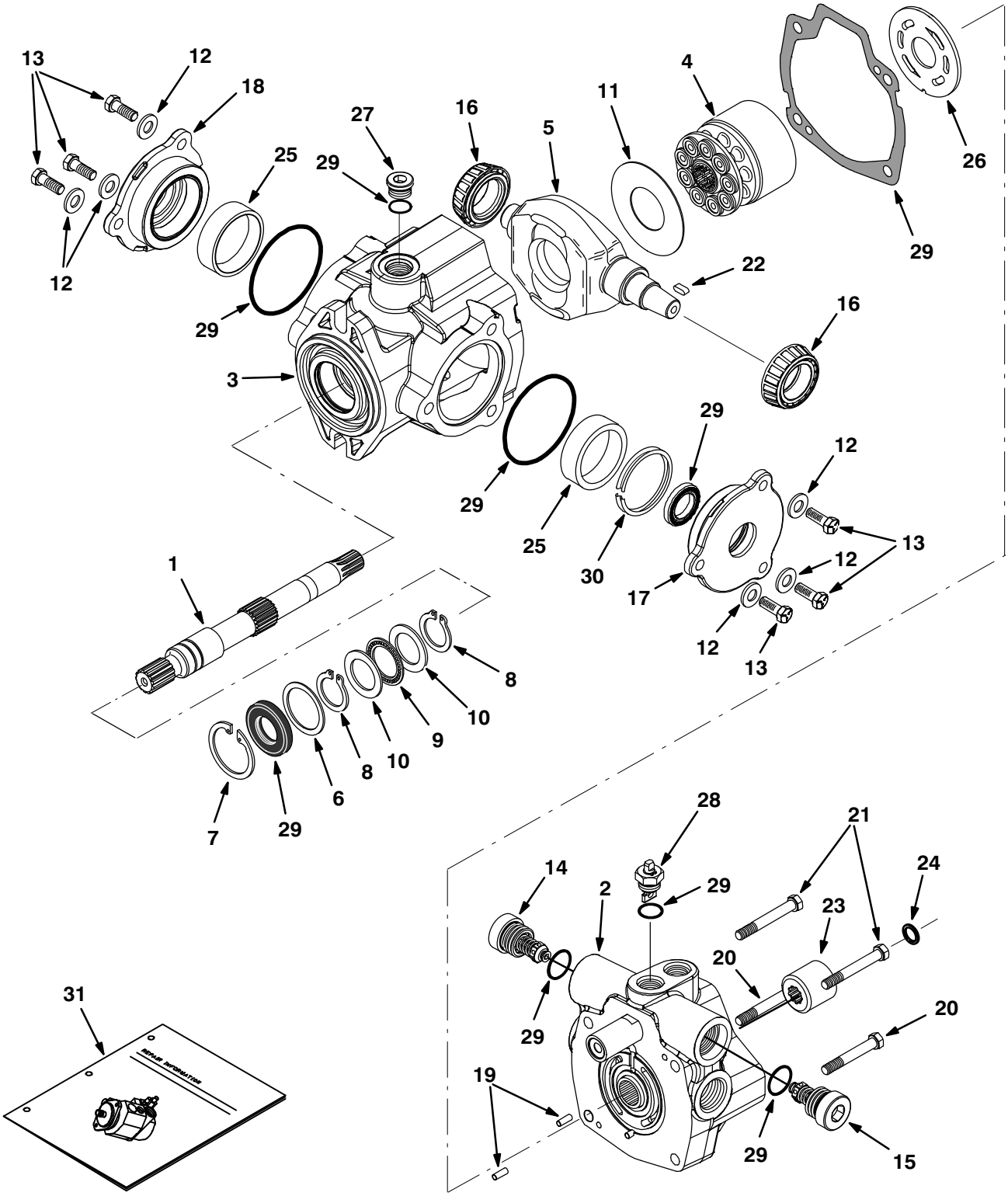

ALL

Fig. 3 – Hydraulic Pump Breakdown, 1024251

	Ref.	Part No.	Serial Number	Description	Qty.
▽		1024251	(000000–)	Pump, Hyd, Piston, Var, 1.24 4000, Cw	1
▲	1	373681	(000000–)	Shaft, Pump	1
▲	2	373427	(000000–)	Cover, End	1
▲	3	373389	(000000–)	Housing	1
▲	4	02706	(000000–)	Pump Kit, Hyd, Rotating [Cessna]	1
▲	5	373493	(000000–)	Plate, Cam	1
▲	6	70096	(000000–)	Washer, Flat, Pump, Hyd	1
▲	7	55926	(000000–)	Ring, Retaining, Pump, Hyd	1
▲	8	373434	(000000–)	Ring, Retaining	2
▲	9	74225	(000000–)	Bearing, Thrust, Pump, Hyd	1
▲	10	74226	(000000–)	Race, Brg, Pump, Hyd	2
▲	11	373327	(000000–)	Insert, Plt, Cam, Pump, Hyd	1
▲	12	373391	(000000–)	Washer, Pump, Hyd [En]	6
▲	13	373346	(000000–)	Screw, Cap	6
▲	14	373494	(000000–)	Valve, Relief, 4000 Psi	1
▲	15	373678	(000000–)	Valve, Relief, 3000 Psi	1
▲	16	373317	(000000–)	Bearing, Cone, Pump, Hyd	2
▲	17	373393	(000000–)	Plate, Cover	1
▲	18	373394	(000000–)	Plate, Cover	1
▲	19	70100	(000000–)	Pin, Dowel, Pump, Hyd	2
▲	20	373347	(000000–)	Screw, Cap	2
▲	21	373348	(000000–)	Screw, Cap	2
▲	22	74237	(000000–)	Key, Shaft, Pump, Hyd	1
▲	23	373679	(000000–)	Coupler, Pump	1
▲	24	373680	(000000–)	Ring, Lock	1
▲	25	373395	(000000–)	Bearing, Cup	2
▲	26	74180	(000000–)	Plate, Valve, Pump, Hyd	1
▲	27	13907	(000000–)	Fitting, Hyd, Plug, Om08	1
▲	28	373413	(000000–)	Actuator, Valve, By–Pass [En]	1
▲	29	373398	(000000–)	Seal Kit, Pump, Hyd	1
▲	30	373402	(000000–)	Shim Kit	1
	31	373429	(000000–)	Instr, Repair, Pump	1

Fig. 4 – Hydraulic Motor Breakdown, 71729

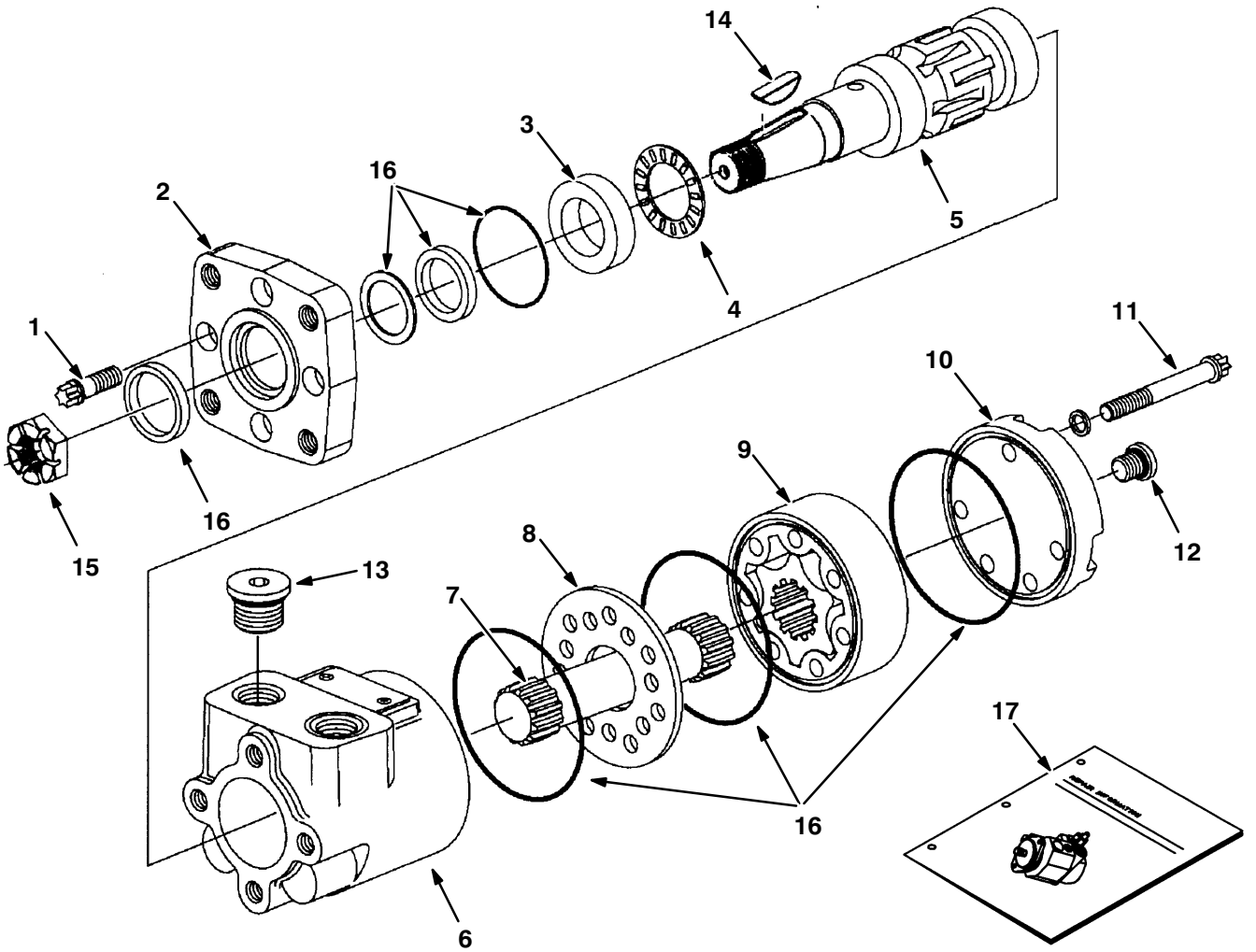

09606–09670 – ALL

	Ref.	Part No.	Serial Number	Description	Qty.
▽		71729	(000000–)	Motor, Hyd Gear In 4.5 B 1500	1
▲	1	37555	(000000–)	Screw	4
▲	2	31354	(000000–)	Flange Mounting	1
▲	3	16695	(000000–)	Race Thrust	1
▲	4	45628	(000000–)	Thrust Bearing	1
▲	5	31375	(000000–)	Shaft, Output	1
▲	6	74100	(000000–)	Housingl	1
▲	7	31379	(000000–)	Drive	1
▲	8	74094	(000000–)	Spacer Plate	1
▲	9	31383	(000000–)	Gerotor Set	1
▲	10	74095	(000000–)	End Cap	1
▲	11	65241	(000000–)	Cap Screw	5
▲	12	74098	(000000–)	Plug #4	1
▲	13	74099	(000000–)	Plug #10	2
▲	14	00500–15	(000000–)	Key–Wdruff 0.25 1.00	1
▲	15	39527	(000000–)	Nut–Hxslot .75–16 Pltd	1
▲	16	61490	(000000–)	Seal Replmt Kit	1
▲	17	74250	(000000–)	Instr. Repair Info, Motor	1

Fig. 5 – Hydraulic Motor Breakdown, 1029379

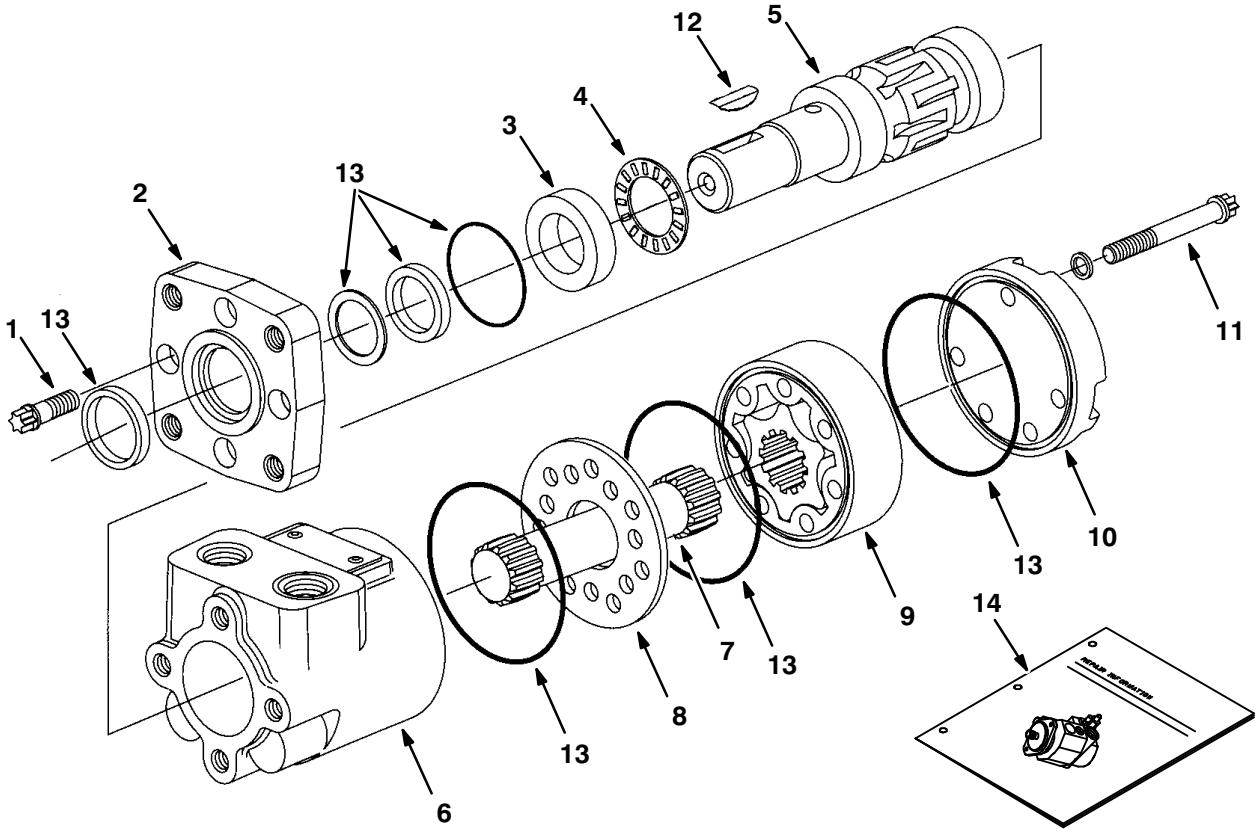

10859–09670 – ALL

	Ref.	Part No.	Serial Number	Description	Qty.
▽		1029379	(000000–)	Motor, Hyd, Gear, Int 08.9 Bi–Dir 2500	1
▲	1	37555	(000000–)	Screw, Motor, Hyd [En]	4
▲	2	31354	(000000–)	Flange, Motor, Hyd [En]	1
▲	3	16695	(000000–)	Ace, Thrust, Motor, Hyd [En]	1
▲	4	45628	(000000–)	Bearing, Thrust	1
▲	5	28854	(000000–)	Shaft, Output, Motor, Hyd [En]	1
▲	6	74100	(000000–)	Housing, Motor, Hyd [En]	1
▲	7	21955	(000000–)	Drive [Cl]	1
▲	8	74094	(000000–)	Plate, Spacer, Motor, Hyd [En]	1
▲	9	21956	(000000–)	Gerotor Set [Cl]	1
▲	10	65230	(000000–)	End Cap, Motor, Hyd [En]	1
▲	11	21958	(000000–)	Cap Screw Cl	5
▲	12	00500–15	(000000–)	Key, Woodruff, 0.25 1.00 [Asa#0808]	1
▲	13	61490	(000000–)	Seal Kit, Motor [Cl]	1
▲	14	74250	(000000–)	Instr, Motor, Hyd, Repair [En]	1

Fig. 6 – Hydraulic Motor Breakdown, 53485

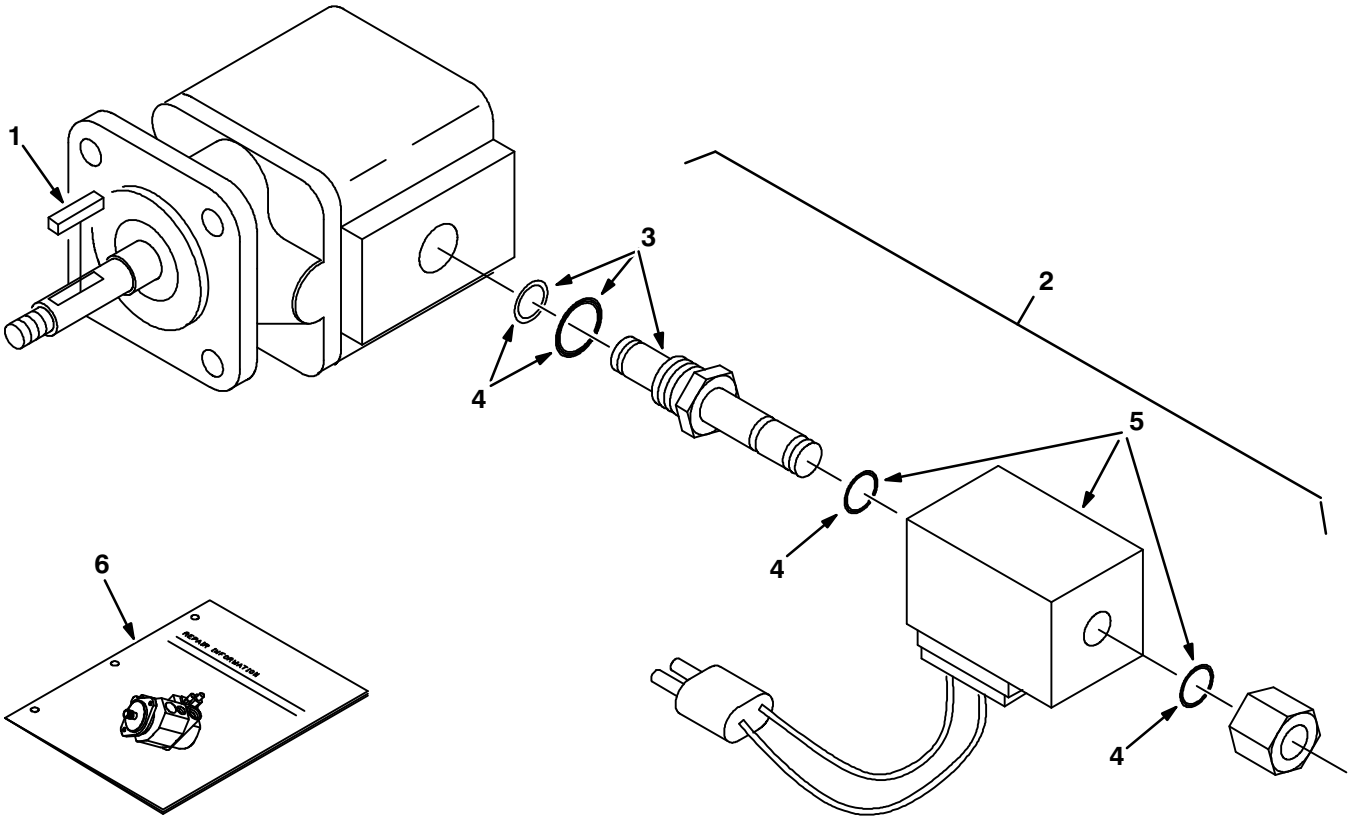

07490 – 09670

	Ref.	Part No.	Serial Number	Description	Qty.
▽		53485	(000000–)	Motor, Hyd, Gear, Ext 0.19 Rh 3000	1
▲		74233	(000000–)	Kit, Seal, Motor, Hyd, Gear[Barns]	1
▲	1	00966	(000000–)	Key, Sq, 0.12 X 0.12, 0.75l	1
▲▽	2	54095	(000000–)	Valve, Hyd Cartridge 10no/–0	1
▲▲	3	59378	(000000–)	Valve Stem, N.O.Valve, Hyd	1
▲▲	4	48813	(000000–)	Kit, Seal, Valve, Hyd [Cec]	1
▲▲	5	35493	(000000–)	Solenoid, 12v, Valve, Hyd [Cec]	1
	6	IB3614	(000000–)	Instr, Seal Kit, Motor	1

Fig. 7 – Hydraulic Valve Breakdown, 1018936

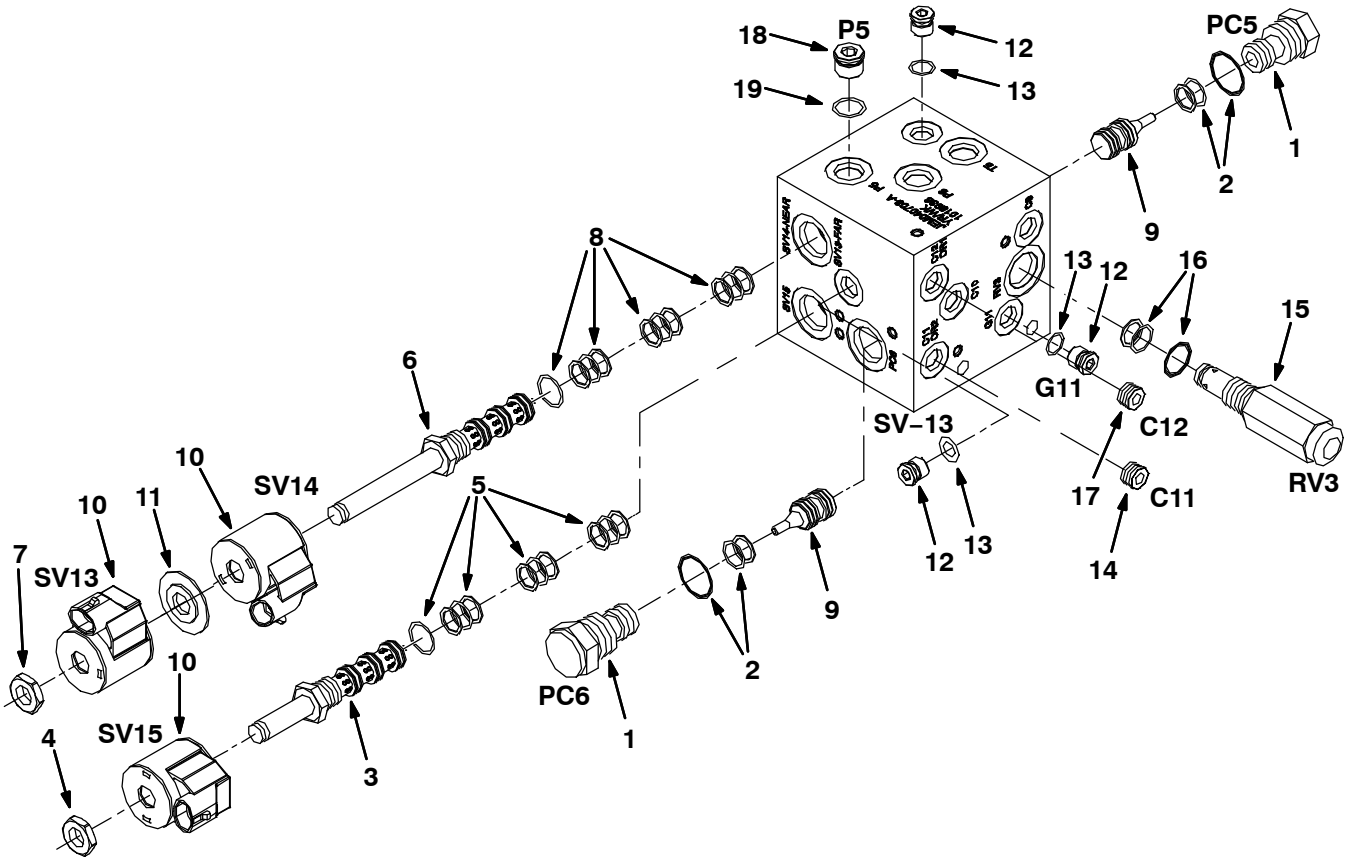

ALL

	Ref.	Part No.	Serial Number	Description	Qty.
▽		1018936	(000000–)	Valve, Cntrl, Hyd [M20]	1
▲▽	1	373656	(000000–)	Valve, Check	2
▲▲	2	373647	(000000–)	Seal Kit, Cartridge	1
▲▽	3	373657	(000000–)	Stem, Valve, Hyd, 4w2p	1
▲▲	4	373648	(000000–)	Nut, Coil, F/#8	1
▲▲	5	373647	(000000–)	Seal Kit, Cartridge	1
▲▽	6	373637	(000000–)	Valve, Cntrl, Solenoid	1
▲▲	7	373648	(000000–)	Nut, Coil, F/#8	1
▲▲	8	373647	(000000–)	Seal Kit, Cartridge	1
▲	9	373658	(000000–)	Spool, Pilot, Hyd	2
▲	10	373640	(000000–)	Solenoid, #8, 12vdc	3
▲	11	373639	(000000–)	Spacer, Coil, #8	1
▲▽	12	74098	(000000–)	Fitting, Hyd, Plug, Om04	3
▲▲	13	77003	(000000–)	Seal, Org, .072 X 00.35id #04	1
▲	14	373633	(000000–)	Plug, Orifice, Valve, Hyd, .040	1
▲▽	15	373659	(000000–)	Valve, Hyd, Relief	1
▲▲	16	373647	(000000–)	Seal Kit, Cartridge	1
▲	17	373660	(000000–)	Plug, Orifice, Valve, Hyd, .030	1
▲▽	18	13904	(000000–)	Fitting, Plug, Org, #6, Valve [Cec]	1
▲▲	19	77005	(000000–)	Seal, Org, .078 X 00.47id #06	1

Fig. 8 – Hydraulic Valve Breakdown, 1018938

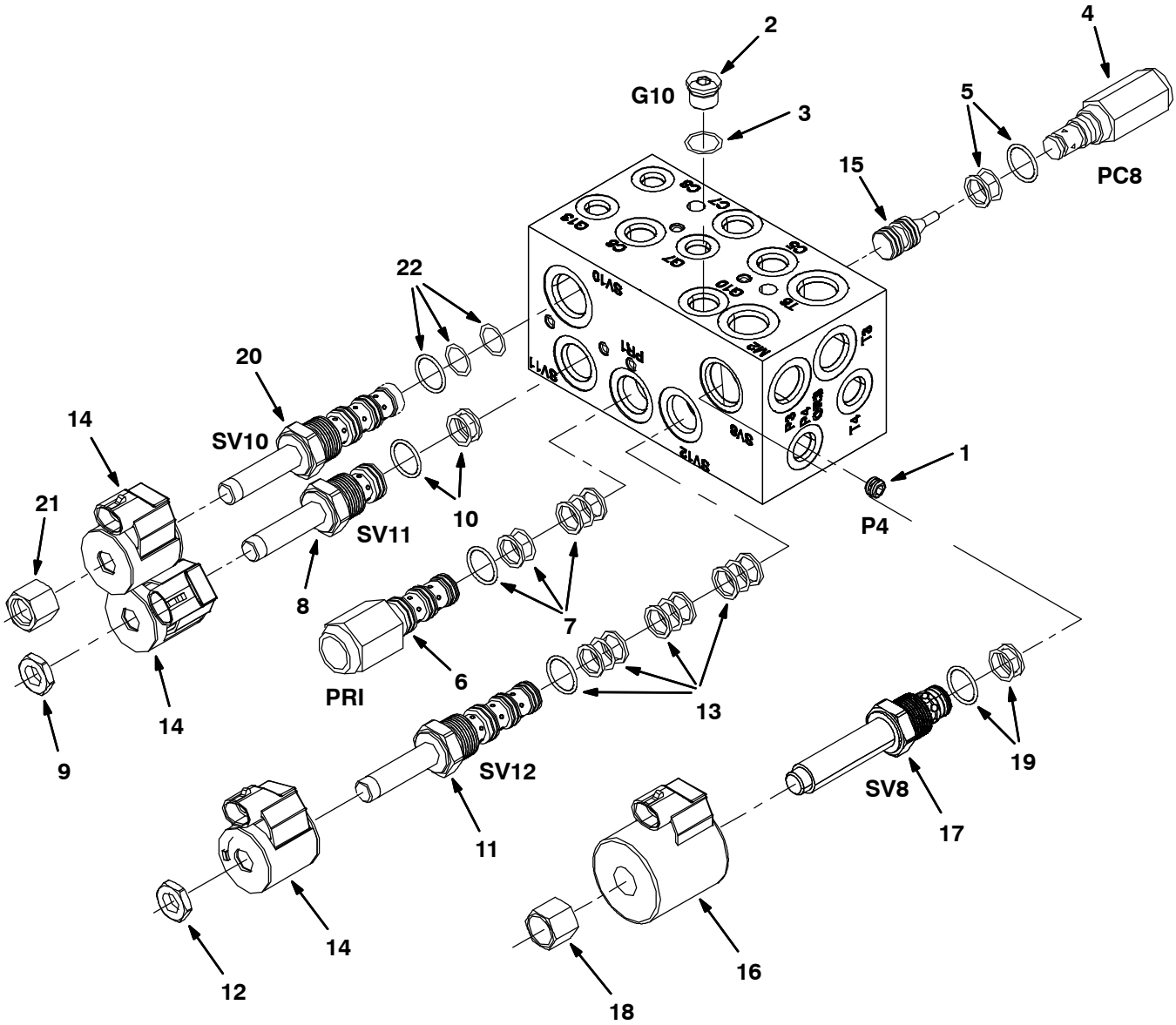

ALL

Fig. 8 – Hydraulic Valve Breakdown, 1018938

	Ref.	Part No.	Serial Number	Description	Qty.
▽		1018938	(000000–)	Valve, Cntrl, Hyd [M20 And T20] (Replaced by 1037805)	1
▲	1	373633	(000000–)	Plug, Orifice, Valve, Hyd, .040	1
▲▽	2	13904	(000000–)	Fitting, Plug, Org, #6, Valve [Cec]	1
▲▲	3	77005	(000000–)	Seal, Org, .078 X 00.47id #06	1
▲▽	4	373656	(000000–)	Valve, Check	1
▲▲	5	373647	(000000–)	Seal Kit, Cartridge	1
▲▽	6	373661	(000000–)	Valve, Relief	1
▲▲	7	373647	(000000–)	Seal Kit, Cartridge	1
▲▽	8	373662	(000000–)	Stem, Valve, Hyd	1
▲▲	9	373648	(000000–)	Nut, Coil, F/#8	1
▲▲	10	373647	(000000–)	Seal Kit, Cartridge	1
▲▽	11	373657	(000000–)	Stem, Valve, Hyd, 4w2p	1
▲▲	12	373648	(000000–)	Nut, Coil, F/#8	1
▲▲	13	373647	(000000–)	Seal Kit, Cartridge	1
▲	14	373640	(000000–)	Solenoid, #8, 12vdc	3
▲	15	373658	(000000–)	Spool, Pilot, Hyd	1
▲	16	373642	(000000–)	Solenoid, #10, 12vdc	1
▲▽	17	373663	(000000–)	Valve, Stem, No	1
▲▲	18	373670	(000000–)	Nut, Solenoid	1
▲▲	19	373646	(000000–)	Seal Kit, Cartridge	1
▲▽	20	373664	(000000–)	Cartridge, Psi Cntrl, Valve, Hyd	1
▲▲	21	373673	(000000–)	Nut, Solenoid	1
▲▲	22	373672	(000000–)	Seal Kit, Cartridge	1

Fig. 9 – Hydraulic Valve Breakdown, 1037805

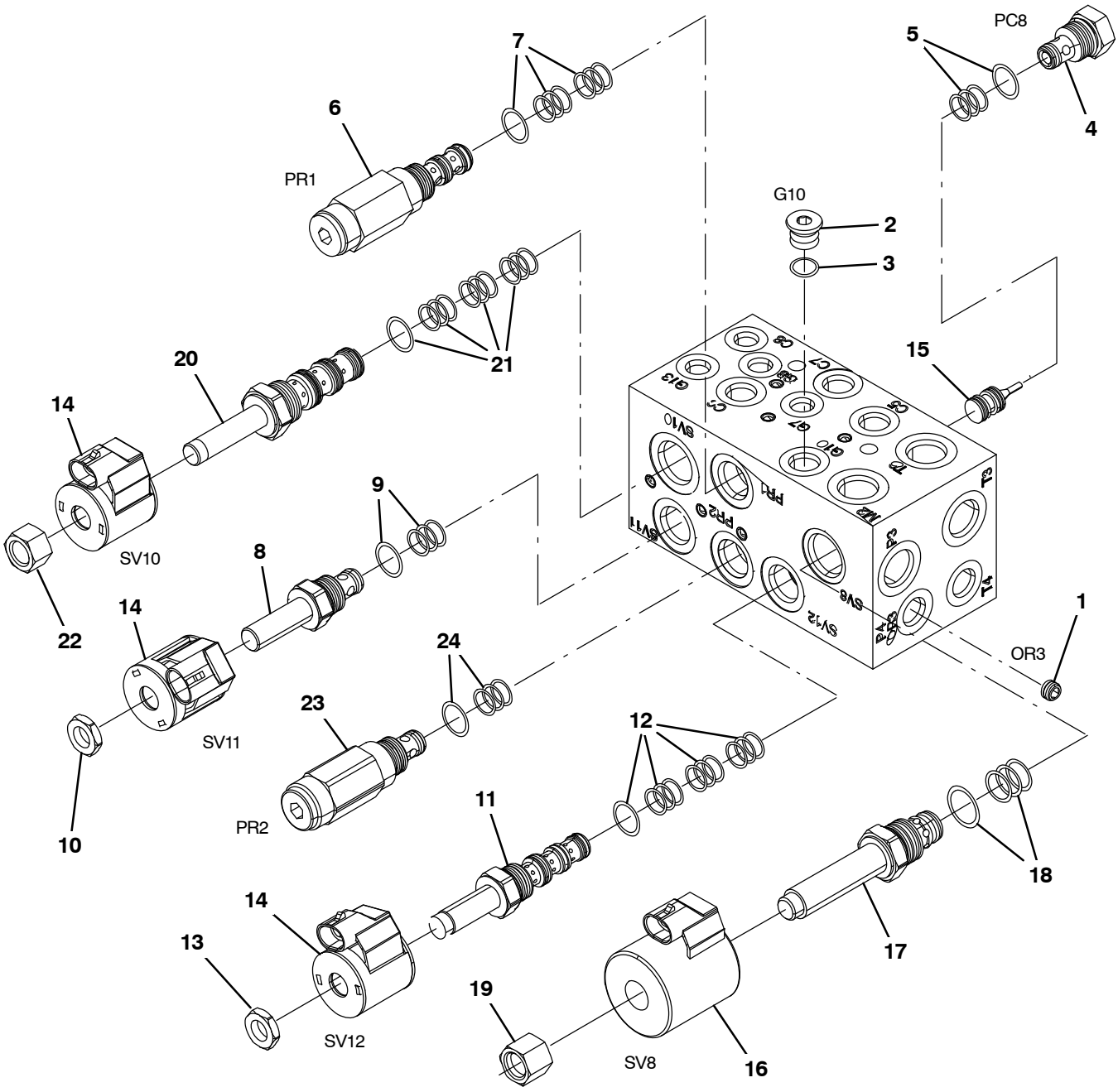

354581 – ALL

Fig. 9 – Hydraulic Valve Breakdown, 1037805

	Ref.	Part No.	Serial Number	Description	Qty.
▽		1037805	(000000–)	Valve, Cntrl, Hyd, Solenoid, 03/16gpm	1
▲	1	373633	(000000–)	Plug, Orifice, Valve, Hyd, .040	1
▲▽	2	13904	(000000–)	Fitting, Plug, Org, #6, Valve [Cec]	1
▲▲	3	77005	(000000–)	Seal, Org, .078 X 00.47id 06	1
▲▽	4	373656	(000000–)	Valve, Check	1
▲▲	5	373647	(000000–)	Seal Kit, Cartridge	1
▲▽	6	373661	(000000–)	Valve, Relief	1
▲▲	7	373647	(000000–)	Seal Kit, Cartridge	1
▲▽	8	373662	(000000–)	Stem, Valve, Hyd	1
▲▲	9	373647	(000000–)	Seal Kit, Cartridge	1
▲▲	10	373648	(000000–)	Nut, Coil, Nyl Patch	1
▲▽	11	373657	(000000–)	Stem, Valve, Hyd [4w2p]	1
▲▲	12	373647	(000000–)	Seal Kit, Cartridge	1
▲▲	13	373648	(000000–)	Nut, Coil, F/#8	1
▲	14	373640	(000000–)	Solenoid, #8, 12vdc	3
▲	15	373658	(000000–)	Spool, Pilot, Hyd	1
▲	16	373642	(000000–)	Solenoid, #10, 12vdc	1
▲▽	17	373663	(000000–)	Valve, Stem, No	1
▲▲	18	373646	(000000–)	Seal Kit, Cartridge	1
▲▲	19	373670	(000000–)	Nut, Solenoid	1
▲▽	20	373664	(000000–)	Cartridge, Psi Cntrl, Valve, Hyd	1
▲▲	21	373672	(000000–)	Seal Kit, Cartridge	1
▲▲	22	373673	(000000–)	Nut, Solenoid	1
▲▽	23	373683	(000000–)	Valve, Relief	1
▲▲	24	373647	(000000–)	Seal Kit, Cartridge	1

Fig. 10 – Hydraulic Valve Breakdown, 1072997

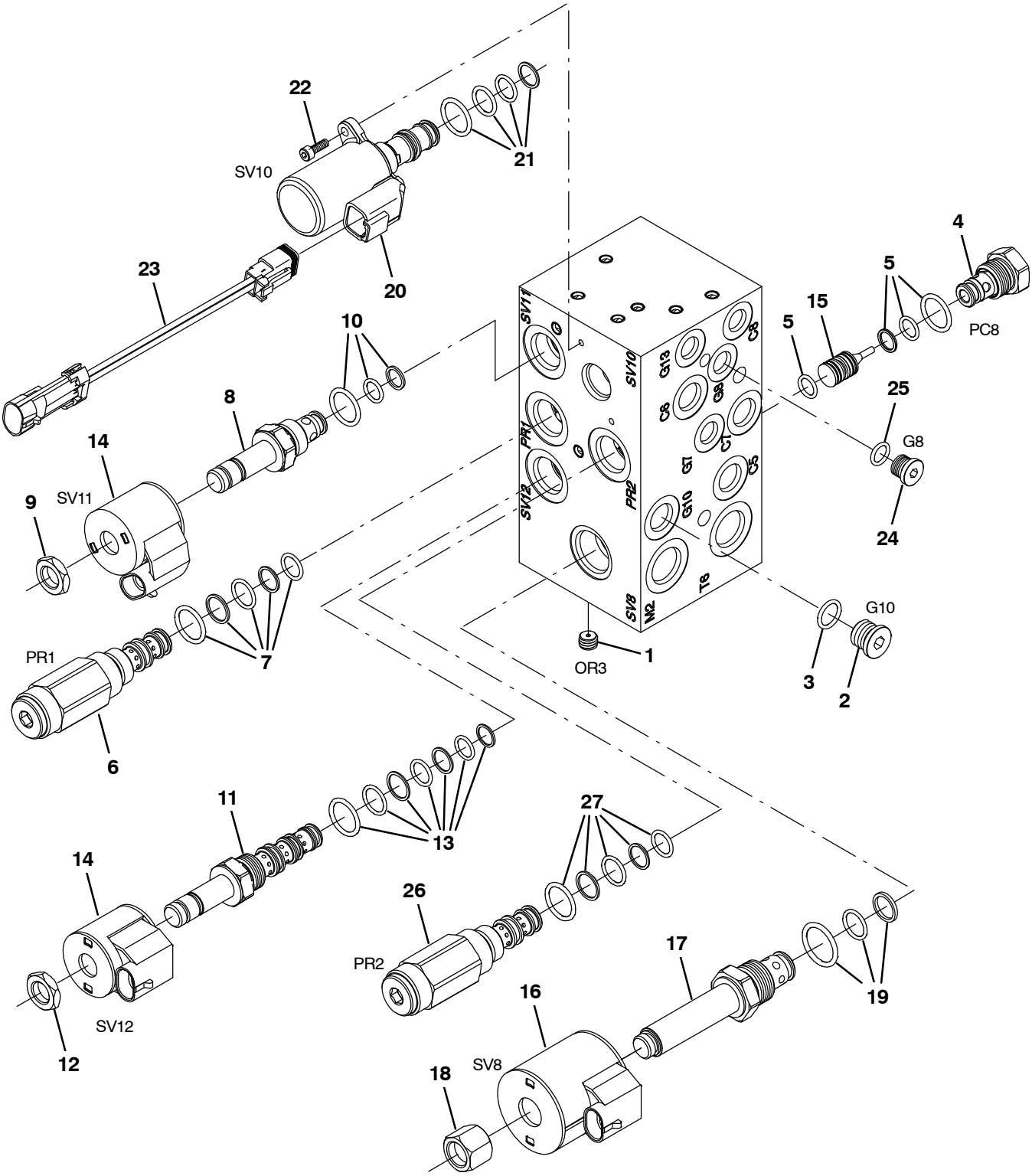

356403 – ALL

Fig. 10 – Hydraulic Valve Breakdown, 1072997

	Ref.	Part No.	Serial Number	Description	Qty.
▽		1072997	(000000–)	Valve, Cntrl, Hyd, Solenoid, 03/16gpm	1
▲	1	373633	(000000–)	Plug, Orifice, Valve, Hyd, .040	1
▲▽	2	13904	(000000–)	Fitting, Plug, Org, #6, Valve [Cec]	1
▲▲	3	77005	(000000–)	Seal, Org, .078 X 00.47id 06	1
▲▽	4	373656	(000000–)	Valve, Check	1
▲▲	5	373647	(000000–)	Seal Kit, Cartridge	1
▲▽	6	373661	(000000–)	Valve, Relief	1
▲▲	7	373647	(000000–)	Seal Kit, Cartridge	1
▲▽	8	373662	(000000–)	Stem, Valve, Hyd	1
▲▲	9	373648	(000000–)	Nut, Coil, Nyl Patch	1
▲▲	10	373647	(000000–)	Seal Kit, Cartridge	1
▲▽	11	373657	(000000–)	Stem, Valve, Hyd [4w2p]	1
▲▲	12	373648	(000000–)	Nut, Coil, F/#8	1
▲▲	13	373647	(000000–)	Seal Kit, Cartridge	1
▲	14	373640	(000000–)	Solenoid, #8, 12vdc	3
▲	15	373658	(000000–)	Spool, Pilot, Hyd	1
▲	16	373642	(000000–)	Solenoid, #10, 12vdc	1
▲▽	17	373663	(000000–)	Valve, Stem, No	1
▲▲	18	373670	(000000–)	Nut, Solenoid	1
▲▲	19	373646	(000000–)	Seal Kit, Cartridge	1
▲▽	20	9011347	(000000–)	Valve Assy [Proportional]	1
▲▲	21	9011343	(000000–)	Seal Kit, Valve [Ehpr98]	1
▲▲	22	9011345	(000000–)	Screw, Mtg [Ehpr98]	2
▲▲	23	9011346	(000000–)	Harness, Jumper [Deutsch To Mpack]	1
▲▽	24	13904	(000000–)	Fitting, Plug, Org, #6, Valve [Cec]	1
▲▲	25	77005	(000000–)	Seal, Org, .078 X 00.47id 06	1
▲▽	26	373683	(000000–)	Valve, Relief	1
▲▲	27	373647	(000000–)	Seal Kit, Cartridge	1

Fig. 11 – Hydraulic Valve Breakdown, 1020394

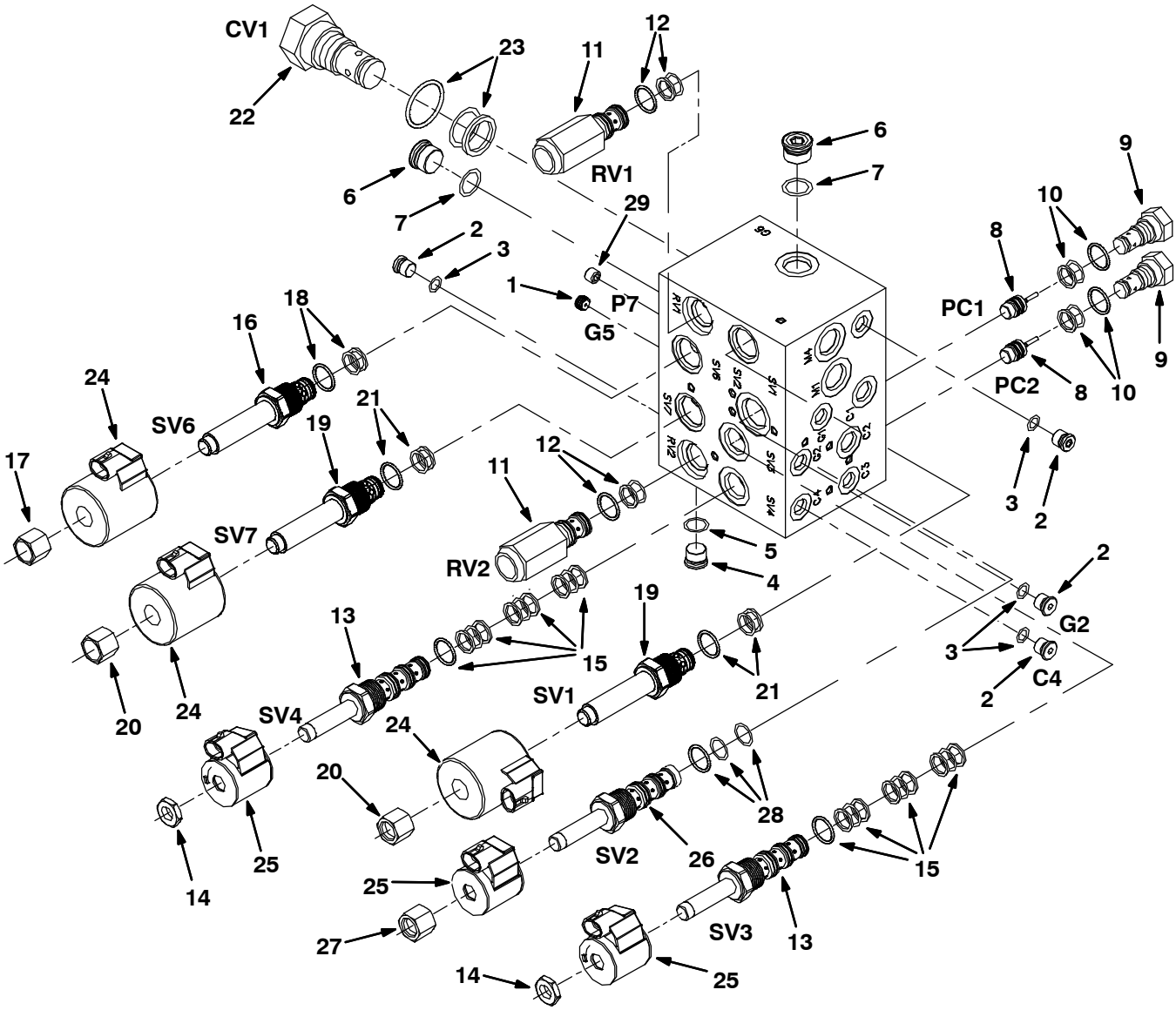

ALL

Fig. 11 – Hydraulic Valve Breakdown, 1020394

	Ref.	Part No.	Serial Number	Description	Qty.
▽		1020394	(000000–)	Valve, Cntrl, Hyd	1
▲	1	373665	(000000–)	Plug, Orifice, Valve, Hyd, .046	1
▲▽	2	74098	(000000–)	Fitting, Hyd, Plug, Om04	4
▲▲	3	77003	(000000–)	Seal, Org, .072 X 00.35id #04	1
▲▽	4	13904	(000000–)	Fitting, Plug, Org, #6, Valve [Cec]	1
▲▲	5	77005	(000000–)	Seal, Org, .078 X 00.47id #06	1
▲▽	6	13907	(000000–)	Fitting, Hyd, Plug, Om08	2
▲▲	7	77006	(000000–)	Seal, Org, .087 X 00.64id #08	2
▲	8	373658	(000000–)	Spool, Pilot, Hyd	2
▲▽	9	373631	(000000–)	Valve, Check	2
▲▲	10	373647	(000000–)	Seal Kit, Cartridge	1
▲▽	11	373666	(000000–)	Valve, Relief	2
▲▲	12	373647	(000000–)	Seal Kit, Cartridge	1
▲▽	13	373657	(000000–)	Stem, Valve, Hyd, 4w2p	2
▲▲	14	373648	(000000–)	Nut, Coil, F/#8	1
▲▲	15	373647	(000000–)	Seal Kit, Cartridge	1
▲▽	16	373667	(000000–)	Stem, Valve, Hyd	1
▲▲	17	373648	(000000–)	Nut, Coil, F/#8	1
▲▲	18	373646	(000000–)	Seal Kit, Cartridge	1
▲▽	19	373663	(000000–)	Valve, Stem, No	2
▲▲	20	373670	(000000–)	Nut, Solenoid	1
▲▲	21	373646	(000000–)	Seal Kit, Cartridge	1
▲▽	22	373668	(000000–)	Valve, Check	1
▲▲	23	373671	(000000–)	Seal Kit, Cartridge	1
▲	24	373642	(000000–)	Solenoid, #10, 12vdc	3
▲	25	373640	(000000–)	Solenoid, #8, 12vdc	3
▲▽	26	373664	(000000–)	Cartridge, Psi Cntrl, Valve, Hyd	1
▲▲	27	373673	(000000–)	Nut, Solenoid	1
▲▲	28	373672	(000000–)	Seal Kit, Cartridge	1
▲	29	373669	(000000–)	Plug, Orifice, Valve, Hyd, .063	1

Fig. 12 – Hydraulic Valve Breakdown, 1038566

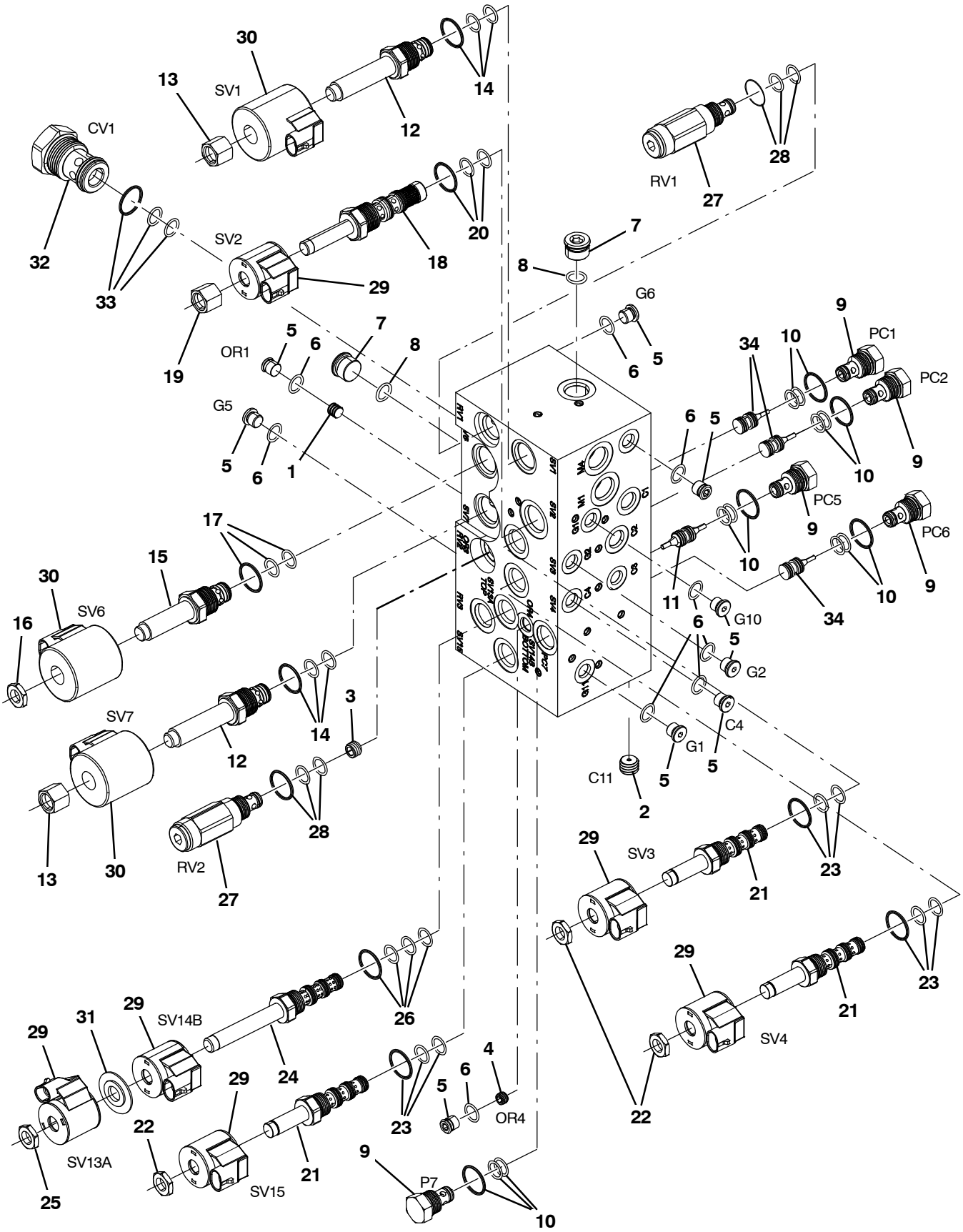

354643 – M20

Fig. 12 – Hydraulic Valve Breakdown, 1038566

	Ref.	Part No.	Serial Number	Description	Qty.
▽		1038566	(000000–)	Valve, Hyd, Solenoid, 12vdc	1
▲	1	373665	(000000–)	Plug, Orifice, Valve, Hyd, .046	1
▲	2	373633	(000000–)	Plug, Orifice, Valve, Hyd, .040	1
▲	3	9004475	(000000–)	Plug Orifice, Valve, Hyd, .140	1
▲	4	373660	(000000–)	Plug, Orifice, Valve, Hyd, .030	1
▲▽	5	74098	(000000–)	Fitting, Hyd, Plug, Om04	9
▲▲	6	77003	(000000–)	Seal, Org, .072 X 00.35id #04	1
▲▽	7	13904	(000000–)	Fitting, Plug, Org, #6, Valve [Cec]	2
▲▲	8	77005	(000000–)	Seal, Org, .078 X 00.47id #06	1
▲▽	9	373656	(000000–)	Valve, Check	5
▲▲	10	373647	(000000–)	Seal Kit, Cartridge	1
▲	11	373688	(000000–)	Spool, Pilot, Dual, Hyd	1
▲▽	12	373663	(000000–)	Valve, Stem, No	2
▲▲	13	373670	(000000–)	Nut, Solenoid	1
▲▲	14	373671	(000000–)	Seal Kit, Cartridge	1
▲▽	15	373667	(000000–)	Stem, Valve, Hyd	1
▲▲	16	373648	(000000–)	Nut, Coil, F/#8	1
▲▲	17	373671	(000000–)	Seal Kit, Cartridge	1
▲▽	18	373664	(000000–)	Cartridge, Psi Cntrl, Valve, Hyd	1
▲▲	19	373673	(000000–)	Nut, Solenoid	1
▲▲	20	373672	(000000–)	Seal Kit, Cartridge	1
▲▽	21	373657	(000000–)	Stem, Valve, Hyd [4w2p]	3
▲▲	22	373648	(000000–)	Nut, Coil, F/#8	1
▲▲	23	373647	(000000–)	Seal Kit, Cartridge	1
▲▽	24	373637	(000000–)	Valve, Cntrl, Solenoid	1
▲▲	25	373684	(000000–)	Nut, Coil, Nyl Patch	2
▲▲	26	373671	(000000–)	Seal Kit, Cartridge	1
▲▽	27	373666	(000000–)	Valve, Relief	2
▲▲	28	373647	(000000–)	Seal Kit, Cartridge	1
▲	29	373640	(000000–)	Solenoid, #8, 12vdc	6
▲	30	373642	(000000–)	Solenoid, #10, 12vdc	3
▲	31	373639	(000000–)	Spacer, Coil, #8	1
▲▽	32	373668	(000000–)	Valve, Check	1
▲▲	33	373671	(000000–)	Seal Kit, Cartridge	1
▲	34	373658	(000000–)	Spool, Pilot, Hyd	3

Fig. 13 – Hydraulic Valve Breakdown, 1072995

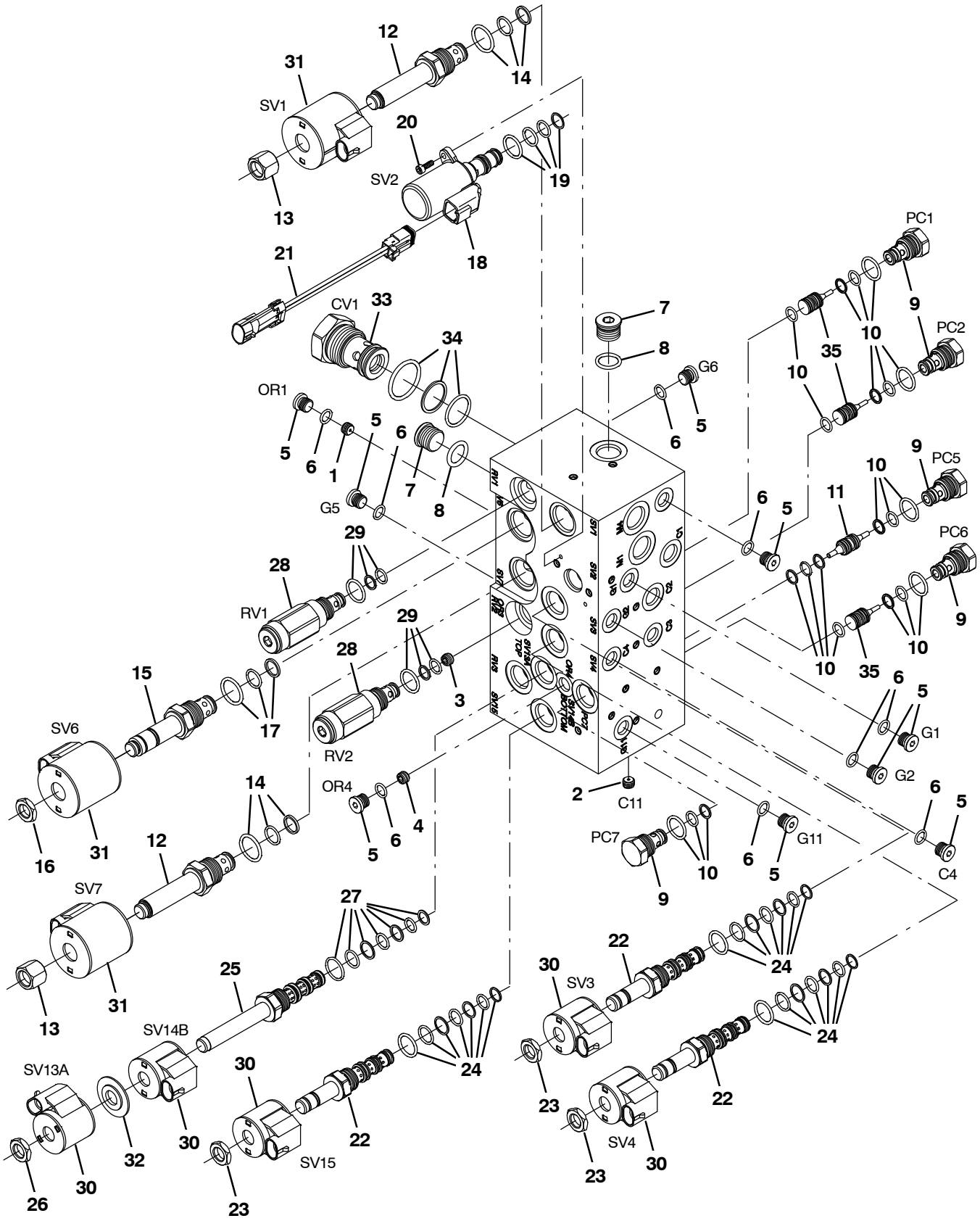

356401 – M20

Fig. 13 – Hydraulic Valve Breakdown, 1072995

	Ref.	Part No.	Serial Number	Description	Qty.
▽		1072995	(000000–)	Valve, Cntrl, Hyd, Solenoid, 12vdc 10gpm	1
▲	1	373665	(000000–)	Plug, Orifice, Valve, Hyd, .046	1
▲	2	373633	(000000–)	Plug, Orifice, Valve, Hyd, .040	1
▲	3	9004475	(000000–)	Plug Orifice, Valve, Hyd, .140	1
▲	4	373660	(000000–)	Plug, Orifice, Valve, Hyd, .030	1
▲▽	5	74098	(000000–)	Fitting, Hyd, Plug, Om04	9
▲▲	6	77003	(000000–)	Seal, Org, .072 X 00.35id #04	1
▲▽	7	13904	(000000–)	Fitting, Plug, Org, #6, Valve [Cec]	2
▲▲	8	77005	(000000–)	Seal, Org, .078 X 00.47id #06	1
▲▽	9	373656	(000000–)	Valve, Check	5
▲▲	10	373647	(000000–)	Seal Kit, Cartridge	1
▲	11	373688	(000000–)	Spool, Pilot, Dual, Hyd	1
▲▽	12	373663	(000000–)	Valve, Stem, No	2
▲▲	13	373670	(000000–)	Nut, Solenoid	1
▲▲	14	373671	(000000–)	Seal Kit, Cartridge	1
▲▽	15	373667	(000000–)	Stem, Valve, Hyd	1
▲▲	16	373648	(000000–)	Nut, Coil, F/#8	1
▲▲	17	373671	(000000–)	Seal Kit, Cartridge	1
▲▽	18	9011347	(000000–)	Valve Assy [Proportional]	1
▲▲	19	9011343	(000000–)	Seal Kit, Valve [Ehpr98]	1
▲▲	20	9011345	(000000–)	Screw, Mtg [Ehpr98]	2
▲▲	21	9011346	(000000–)	Harness, Jumper [Deutsch To Mpack]	1
▲▽	22	373657	(000000–)	Stem, Valve, Hyd [4w2p]	3
▲▲	23	373648	(000000–)	Nut, Coil, F/#8	1
▲▲	24	373647	(000000–)	Seal Kit, Cartridge	1
▲▽	25	373637	(000000–)	Valve, Cntrl, Solenoid	1
▲▲	26	373684	(000000–)	Nut, Coil, Nyl Patch	2
▲▲	27	373671	(000000–)	Seal Kit, Cartridge	1
▲▽	28	373666	(000000–)	Valve, Relief	2
▲▲	29	373647	(000000–)	Seal Kit, Cartridge	1
▲	30	373640	(000000–)	Solenoid, #8, 12vdc	5
▲	31	373642	(000000–)	Solenoid, #10, 12vdc	3
▲	32	373639	(000000–)	Spacer, Coil, #8	1
▲▽	33	373668	(000000–)	Valve, Check	1
▲▲	34	373671	(000000–)	Seal Kit, Cartridge	1
▲	35	373658	(000000–)	Spool, Pilot, Hyd	3

Fig. 14 – Hydraulic Steering Valve Breakdown, 1024260

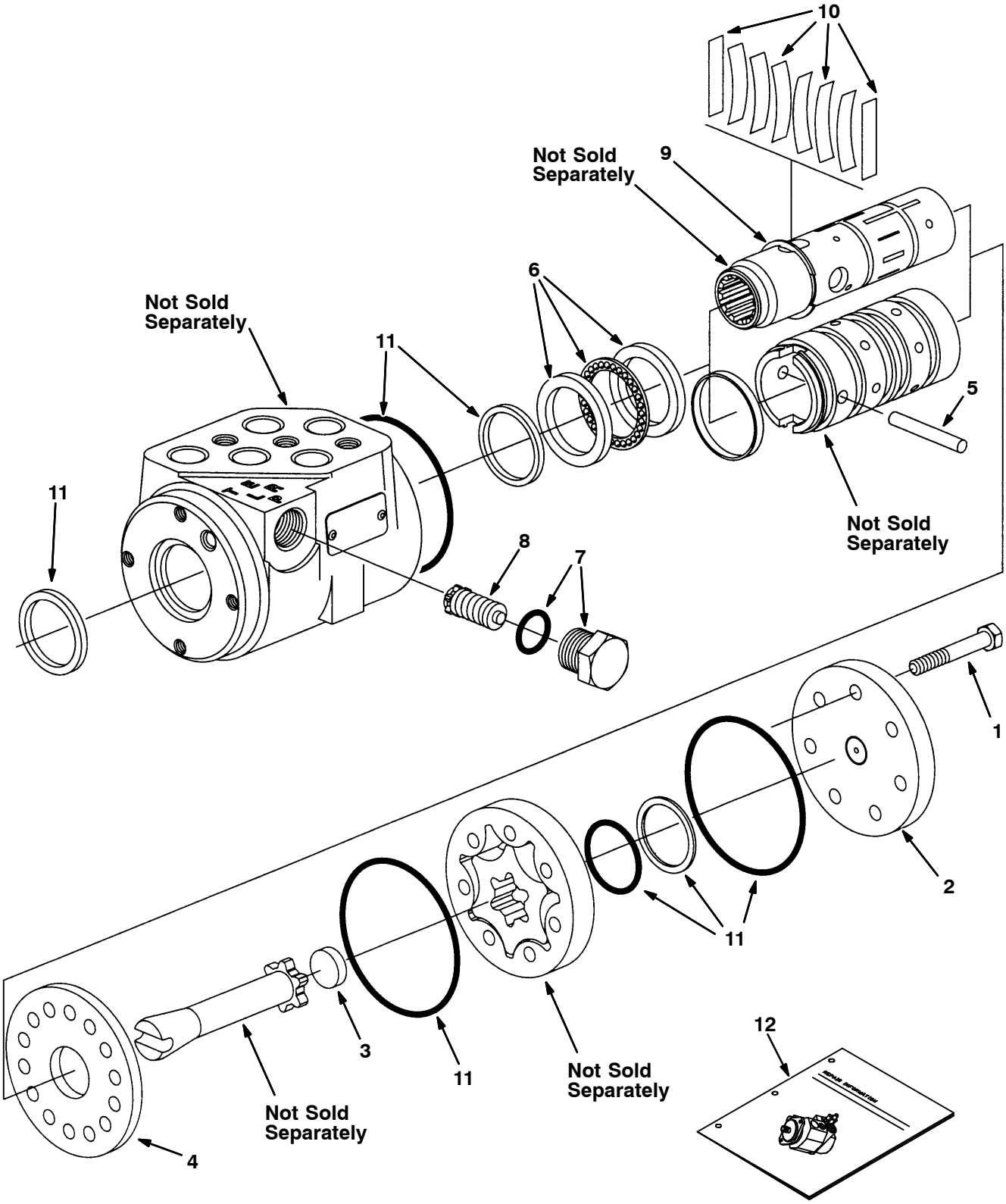

Fig. 14 – Hydraulic Steering Valve Breakdown, 1024260

	Ref.	Part No.	Serial Number	Description	Qty.
▽		1024260	(000000–)	Steer–Control, Hyd05, 06.1 2030	1
▲	1	74183	(000000–)	Screw, Valve, Steering	7
▲	2	74185	(000000–)	Cap, End, Valve, Steering	1
▲	3	74193	(000000–)	Spacer, Valve, Steering	1
▲	4	74222	(000000–)	Plate, Wear, Steering Valve	1
▲	5	74232	(000000–)	Pin, Valve, Steering	1
▲	6	21935	(000000–)	Bearing Kit [Cl]	1
▲	7	21933	(000000–)	Plug Assy [Cl]	1
▲	8	21934	(000000–)	Valve Assy, Relief [Cl]	1
▲	9	74243	(000000–)	Ring, Retainer, Steering Valve	1
▲	10	74196	(000000–)	Spring Kit, Scu [Cl]	1
▲	11	74244	(000000–)	Seal Kit, Steering [Cl]	1
▲	12	74245	(000000–)	Instr, Valve, Steering, Repair	1

Fig. 15 – Metering Solution Pump Breakdown, 73260

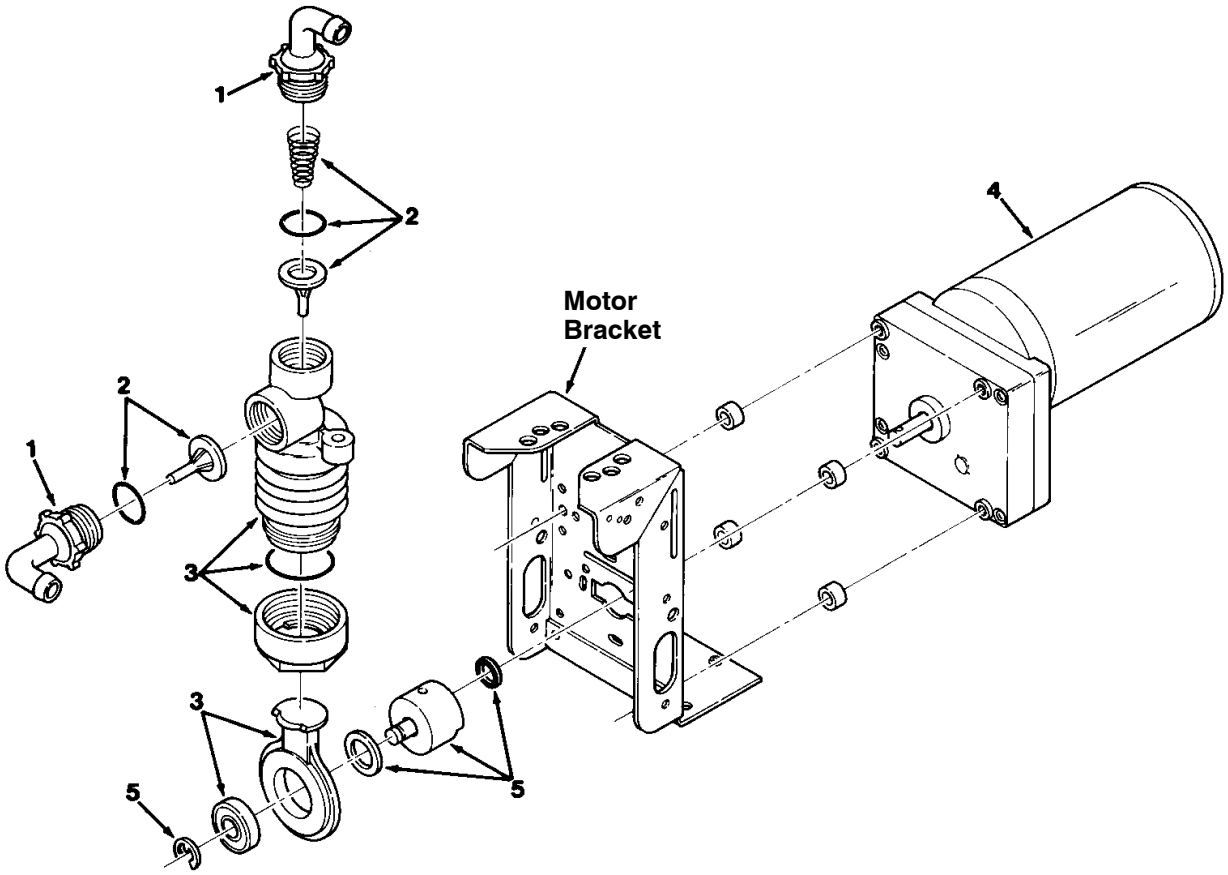

00112 – ALL

	Ref.	Part No.	Serial Number	Description	Qty.
▽		73260	(000000–)	Pump, Detgt, 14vdc, 150ml/Min 20psi	1
▲	1	63923	(000000–)	Tubing Connctr.Kit, Gorman Pmp	1
▲	2	21659	(000000–)	Valve Kit, Poppet, Gorman Rupp	1
▲	3	21657	(000000–)	Kit, Bellows, Pump, Detgt	1
▲	4	78875	(000000–)	Motor, Ele, Gear, 14vdc, Pump, Detgt	1
▲	5	02430	(000000–)	Crank Kit, Pump, F/79323, Replmt	1

Fig. 16 – Water Pump Breakdown, 1026743

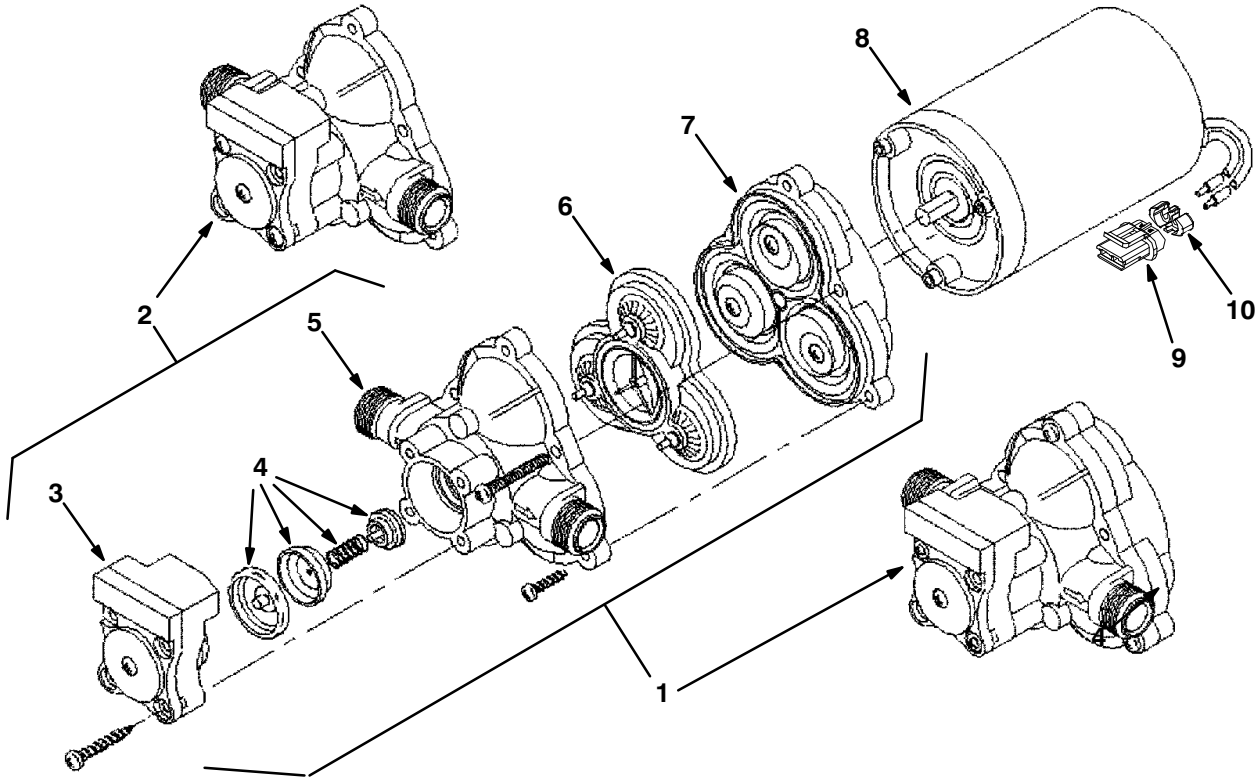

07490 – 09670

	Ref.	Part No.	Serial Number	Description	Qty.
▽		1026743	(000000–)	Pump, Diaphragm	1
▲	1	1031802	(000000–)	Complete Pump Kit, Pump, Repair,	1
▲	2	1031803	(000000–)	Hsg & Switch Kit, Pump, Repair,	1
▲	3	1031796	(000000–)	Switch Kit, Pump, Repair,	1
▲	4	1031797	(000000–)	Chech Valve Kit, Pump, Repair,	1
▲	5	1031798	(000000–)	Upper Hsg Kit, Pump, Repair,	1
▲	6	1031799	(000000–)	Bypass Valve Kit, Pump, Repair,	1
▲	7	1031800	(000000–)	Diaphragm Kit, Pump, Repair,	1
▲	8	1031801	(000000–)	Motor Kit, Pump, Repair,	1
▲	9	78950	(000000–)	Connector, Fem, 02cav, Mp280 Sealed	1
▲	10	78952	(000000–)	Lock, Secondary, 2cav, Mp280 Sealed	1
▲		78951	(000000–)	Terminal, Fem, Mp280, Sealed, 18–16ga	2
▲		10917	(000000–)	Seal, Wire, 14/16ga [Wp / Mp280 Sealed]	2

Fig. 17 – ec–H20 Module Assembly Breakdown, 9007882

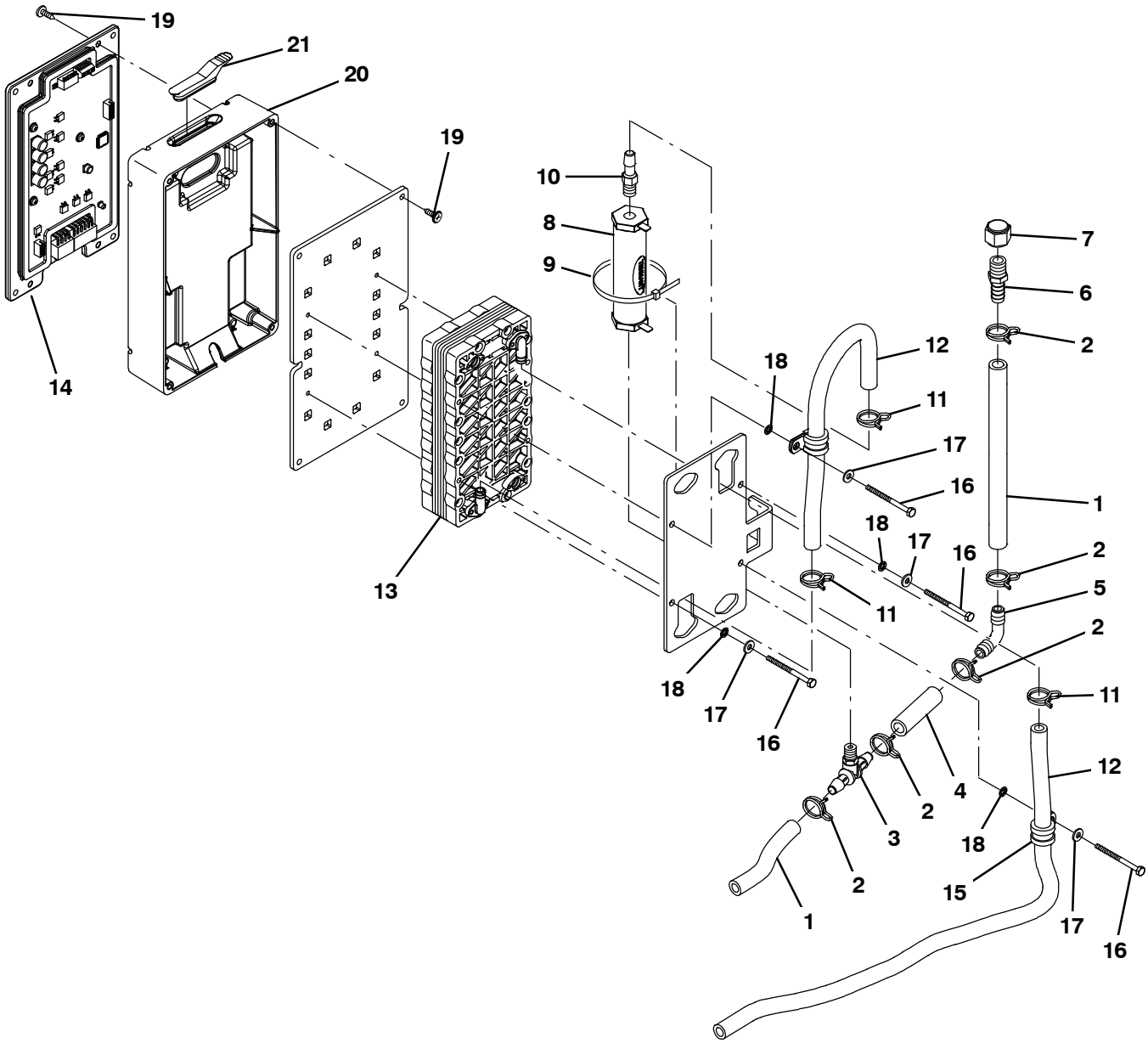

356035

Fig. 17 – ec–H20 Module Assembly Breakdown, 9007882

	Ref.	Part No.	Serial Number	Description	Qty.
▽		9007882	(000000–)	Module Kit, Replmt [Ec–H20]	1
▲	1	1014974	(000000–)	Hose, Afmkt, Pvc, Brd, 0.38id, 02ft, Clr	2
▲	2	607775	(000000–)	Clamp, Hose, Wir, .63 – .66, Blk	5
▲	3	1060517	(000000–)	Fitting, Plstc, Tee, Bm06/Pm02/Bm06	1
▲	4	1014971	(000000–)	Hose, Afmkt, Pvc, Brd, 0.38id, 01ft, Clr	1
▲	5	20951	(000000–)	Fitting, Plstc, E90, Bm06/Bm06	1
▲	6	150540	(000000–)	Fitting, Plstc, Str, Bm06/Pm04	1
▲	7	1005435	(000000–)	Fitting, Plstc, Pipe, Cap, Pf04	1
▲	8	1038159	(000000–)	Electrode, Cylindrical	1
▲	9	44961	(000000–)	Tie, Cable, Nyl, 14.5l .30w 4.0 Max D	1
▲	10	1060695	(000000–)	Fitting, Plstc, Str, Pm02/Bm05	1
▲	11	1053464	(000000–)	Clamp, Hose, Wir, .52 – .56, Yel	3
▲	12	1052336	(000000–)	Hose, Afmkt, PVC, Brd, 0.31Id, 03Ft, Clr	1
▲	13	1057637	(000000–)	Electrode, 5 Plate, High Flow	1
▲	14	9007883	(000000–)	Controller Kit, Replmt [Ec–H20]	1
▲	15	1016354	(000000–)	Clamp, Cable, Ss, 0.50d X 0.50w [Insul]	2
▲	16	32509	(000000–)	Screw, Hex, M4 X 0.70 X 50, Ss	4
▲	17	41579	(000000–)	Washer, Flat, 08, Ss	4
▲	18	02938	(000000–)	Washer, Lock, Int, 08, Ss	4
▲	19	1018155	(000000–)	Screw, Pan, Phl, M5 X 0.80 X 16, Tcut,Ss	8
▲	20	1037032	(000000–)	Housing, Bottom	1
▲	21	1054776	(000000–)	Grommet, Blind	1

Fig. 18 – Seat Breakdown, 1072456

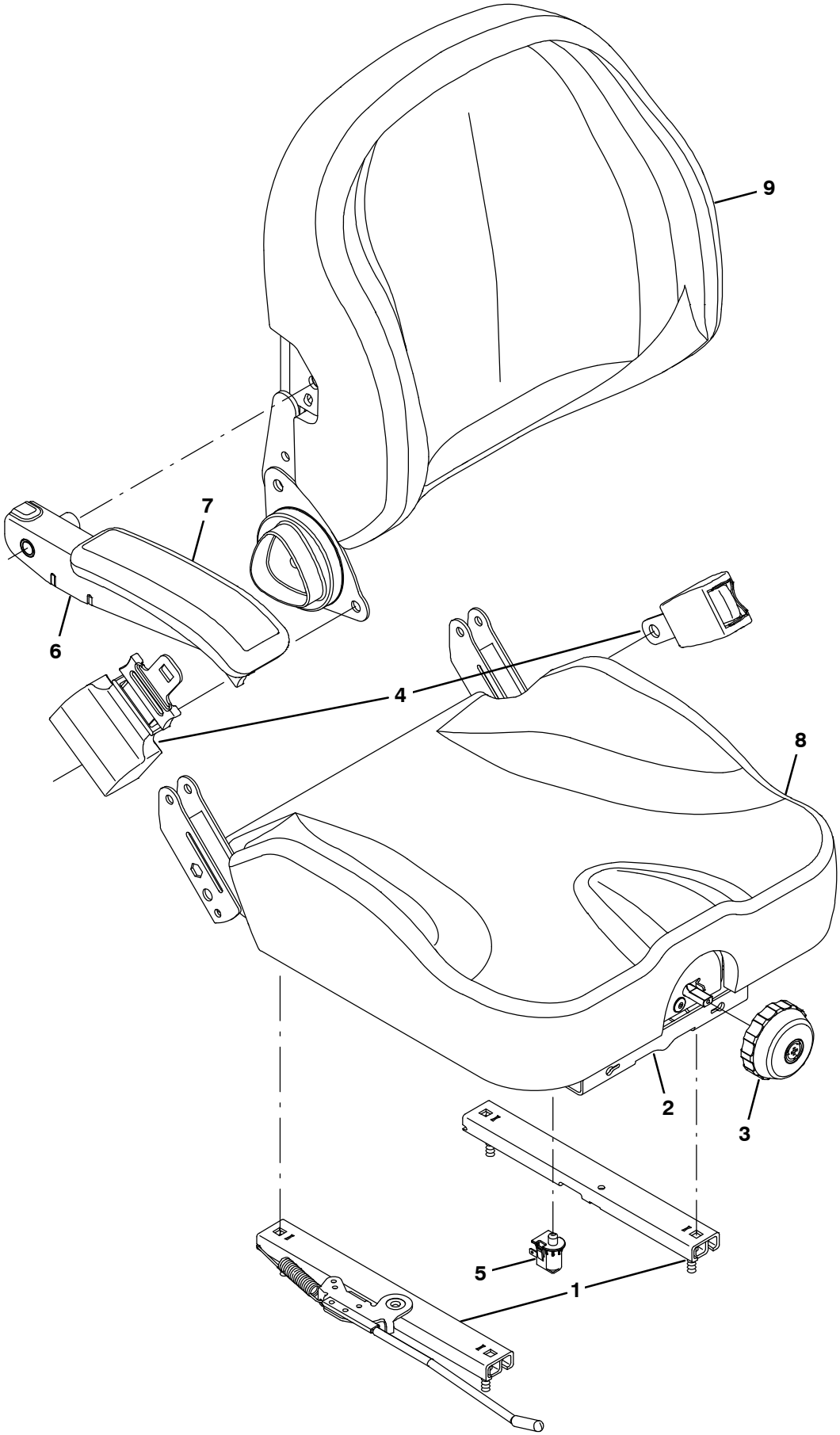

356526

Fig. 18 – Seat Breakdown, 1072456

	Ref.	Part No.	Serial Number	Description	Qty.
▽		1072456	(000000–)	Seat	1
▲	1	9012585	(000000–)	Track Assy, Slide	1
▲	2	9012587	(000000–)	Bellows, Seat	1
▲	3	9012589	(000000–)	Knobs, Adjmt, Weight	1
▲	4	9012590	(000000–)	Seatbelt	1
▲	5	9012591	(000000–)	Switch, Seat	1
▲	6	9012592	(000000–)	Armrest	1
▲	7	9012593	(000000–)	Pad, Armrest	1
▲	8	9012594	(000000–)	Cover, Cushion	1
▲	9	9012595	(000000–)	Cover, Backrest	1

Fig. 19 – FaST Injector Assembly Breakdown, 9008868

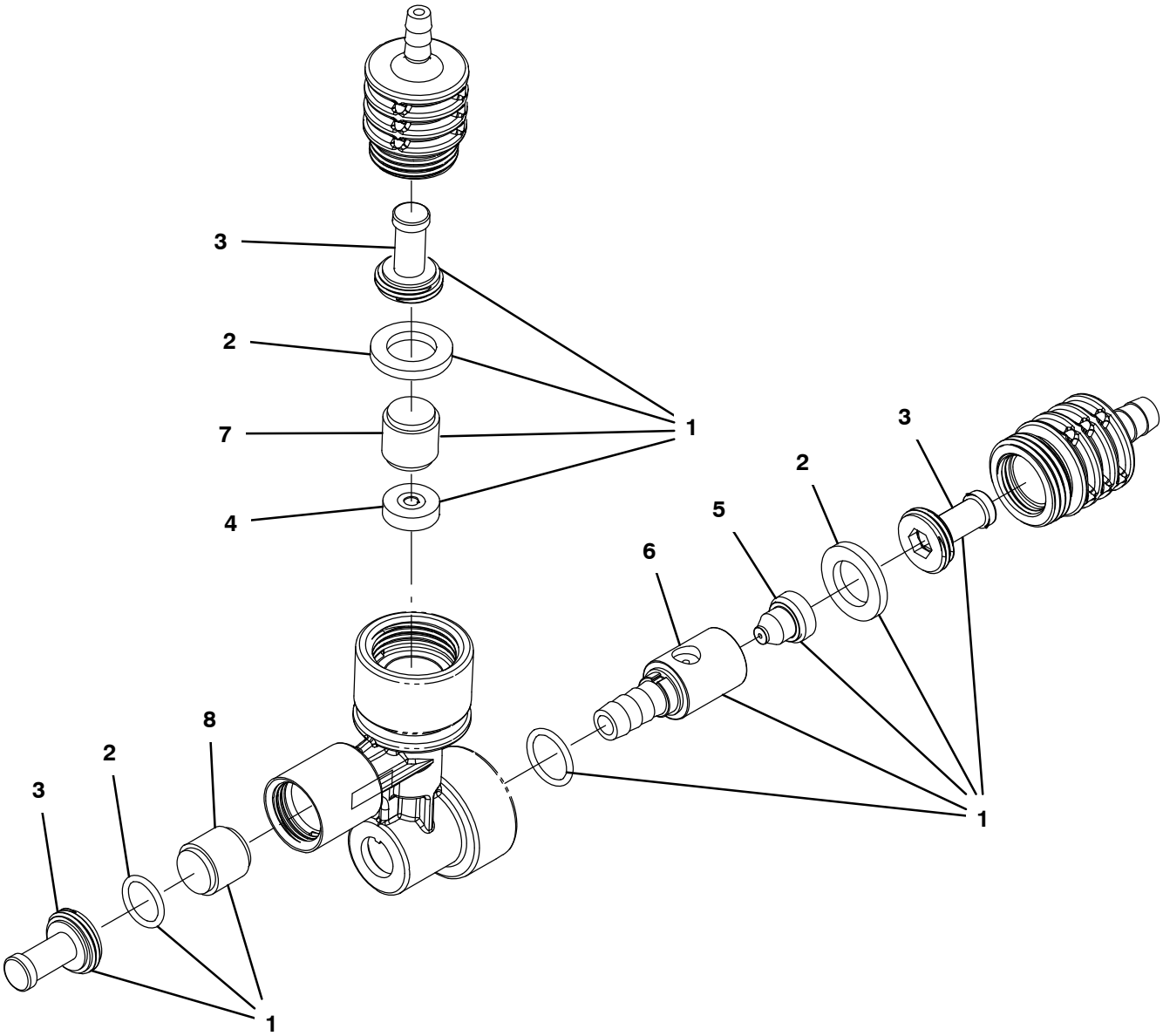

356271

	Ref.	Part No.	Serial Number	Description	Qty.
▽		9008868	(000000–)	FaST Kit, Injector [M20/T20/m30 FaST III}	1
▲▽	1	9008757	(000000–)	FaST Kit, Ci [inj Rebld, M30/M20 III]	1
▲▲	2	9008848	(000000–)	FaST Kit, Seal, injector, Ci [FaST III]	1
▲▲	3	9003009	(000000–)	FaST Kit, Ci, Injector Filters[FaST Ii+]	1
▲▲	4	1059878	(000000–)	Plate Assy, Orifice, 0.0105Id, Green	1
▲▲	5	1042710	(000000–)	Plug, Orifice, 0.060, Ss [FaST Ii+]	1
▲▲	6	1059234	(000000–)	Insert, :Lrg [Venturi, FaST III]	1
▲▲	7	1030444	(000000–)	Valve, Check, 0002psi [FaST Ii+]	1
▲▲	8	1030441	(000000–)	Valve, Check, 0005psi [FaST Ii+]	1

SECTION 5

Contents **Page**

Fig. 1 – Cylinder Head and Valves Group . . . 5-2
Fig. 2 – Crankshaft and Pistion Group 5-4
Fig. 3 – Oil and Water Pump Group 5-6
Fig. 4 – Oil Pan and Filter Group 5-8
Fig. 5 – Manifold Group 5-9
Fig. 6 – Camshaft Group 5-10
Fig. 7 – Ignition Group 5-12

Fig. 1 – Cylinder Head and Valves Group

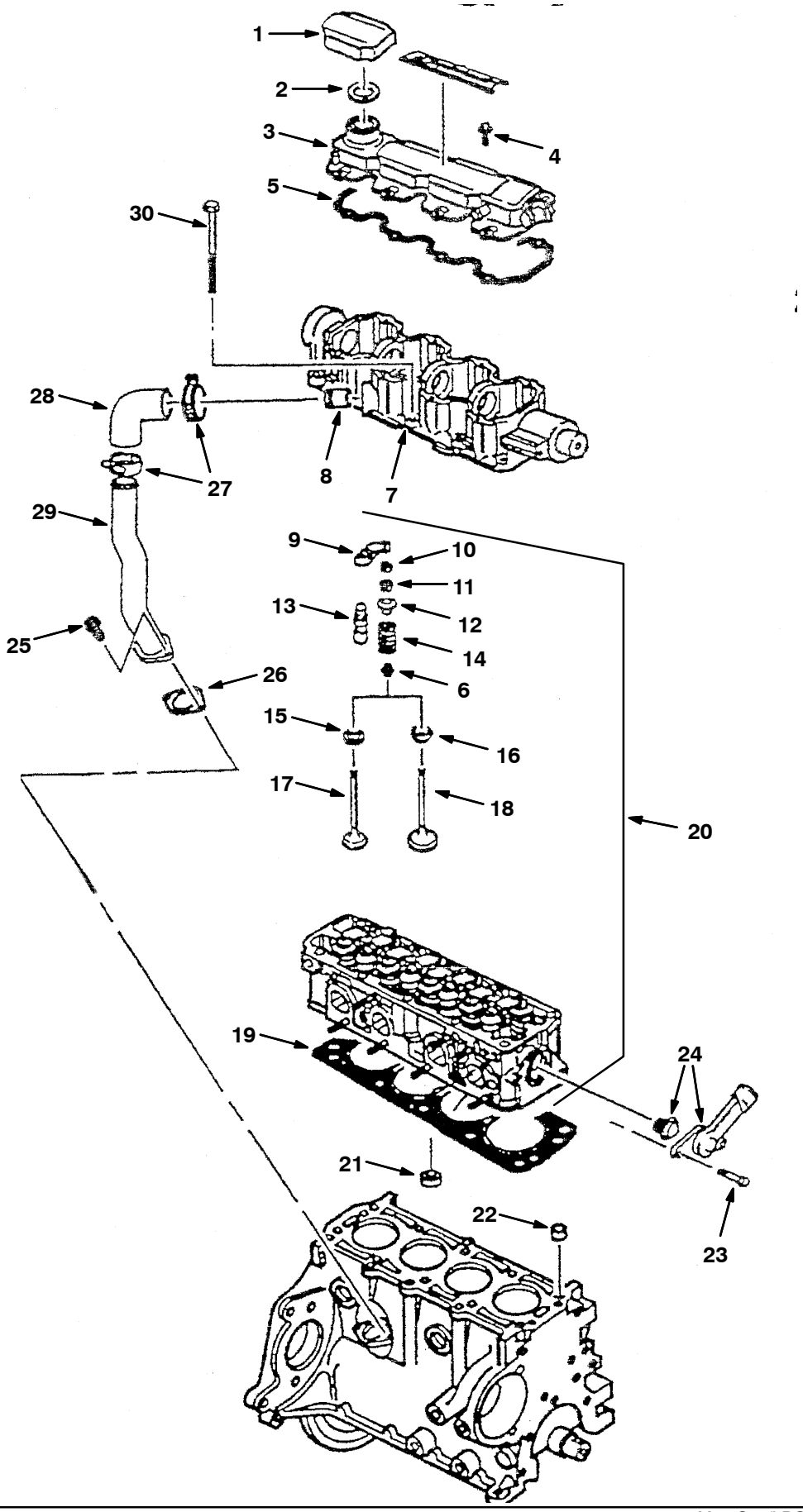

G, LP

Fig. 1 – Cylinder Head and Valves Group

Ref.	Part No.	Description	Qty.
1	372574	Cap, Filler, Oil, W/ Org	1
2	372573	Seal, Org, Cap	1
3	372007	Cover, Hsng, Camshaft	1
4	371990	Bolt, Camshaft Cover	8
5	372008	Gasket, Cover, Hsng, Camshaft	1
6	9003345	Seal, Seat, Valve	8
7	372018	Housing, Camshaft	1
8	372019	Tube [Pcv]	1
9	372030	Arm, Rocker, Valve	8
10	372031	Seat, Spring, Valve, 0.333	8
11	372033	Key, Valve Stem	16
12	372034	Cap, Spring, Valve	4
13	372035	Screw, Adj, Valve, Hyd	8
14	372036	Spring, Valve	8
15	372037	Seat, Rotator, Valve	4
16	372032	Seat, Spring, Valve	4
17	372038	Valve, Exhaust	4
18	372039	Valve, Intake	1
19	372022	Gasket, Head, Cyl	1
20	372023	Head, Cyl	1
21	372024	Seat, Valve, Exhaust, [+0.2mm]	4
21	372025	Seat, Valve, Exhaust, Std	4
21	372026	Seat, Valve, Exhaust, [+0.4mm]	4
21	372027	Seat, Valve, Intake, Std	4
21	372028	Seat, Valve, Intake, [+0.2mm]	4
21	372029	Seat, Valve, Intake, [+0.4mm]	4
22	371999	Pin, Lock, Cyl Head, 14mm X 17mm	2
23	372048	Bolt, Hsng, Thermostat	2
24	372047	Thermostat, W/ Hsng And Seal	1
25	371957	Bolt, Tube [Pvc], M6 X 1 X 15	2
26	371958	Gasket, Tube [Pcv]	1
27	371954	Clamp, Hose, 1.75 [Pcv]	2
28	371955	Hose [Pcv]	1
29	371956	Tube [Pcv]	1
30	372882	Bolt, Head. Cyl	10

Fig. 2 – Crankshaft and Pistion Group

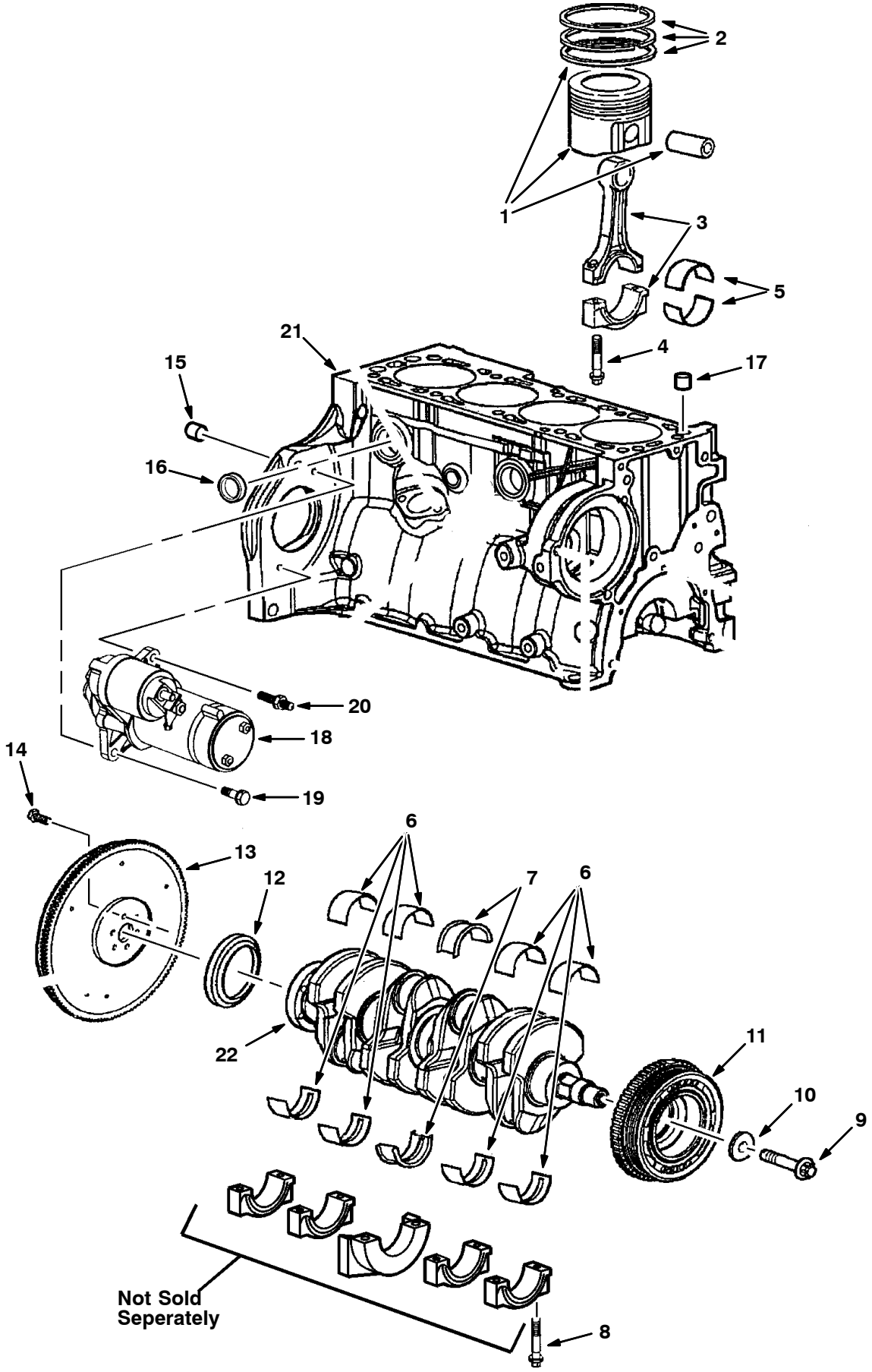

G, LP

Fig. 2 – Crankshaft and Piston Group

	Ref.	Part No.		Description	Qty.
▽	1	371932		Piston, W/ Pin, Std	1
▲	2	371931		Ring Kit, Piston, Std 78.95–79.02mm	4
	3	371934		Rod, Connecting, M08 X 45	4
	4	371935		Bolt, Connecting Rod	8
	5	371933		Bearing Kit, Rod, Connecting, Std	1
	6	371966		Bearing Kit, Cshft, 1.995–2.001mm (Brown Blue)	4
	6	371967		Bearing Kit, Cshft, 2.120–2.126mm	4
	6	371968		Bearing Kit, Cshft, 2.114–2.120mm (Green)	4
	6	371969		Bearing Kit, Cshft, 1.989–1.995mm (Std Brown)	4
	7	371970		Bearing Kit, Cshft, 1.989–1.995mm (Brown – Middle)	1
	7	371971		Bearing Kit, Cshft, 1.995–2.001mm (Green – Middle)	1
	8	371946		Bolt, M10 X 1.50 X 75mm	10
	9	371938	1	Bolt, M12 X 1.75 X 62mm	1
	9	384961	2	Bolt, Pulley, Cshft	1
	10	371937		Washer, Sheave, Cshft	1
	11	371936		Sheave, Cshft	1
	12	371945		Seal, Oil, Cshft	1
▽	13	371979		Flywheel	1
▲		371977		Gear, Ring, Starter	1
	14	371976		Bolt, Flywheel	6
	15	371978		Pin, Lock, Transmission	2
	16	371942		Plug, Hole, Coolant, Eng Block	6
	17	371999		Pin, Lock, Cyl Head, 14mm X 17mm	2
	18	371962	3	Starter, 12vdc [Gm] (Before Mar. 2006)	1
	18	384963	4	Starter, 12vdc [Delco] (Mar. 2006 and Newer)	1
	19	371963	1	Bolt, M08 X 1.25 X 25mm	1
	19	384964	2	Bolt, M08 X 1.25 X 25mm	1
	20	371964		Stud, Starter, M08 X 1.25	1
	21	371944		Block, Short, Eng, W/ Piston & Ring	1
	22	371965		Crankshaft	1

1 Serial Number (000000–xxxxxx)

2 Serial Number (xxxxxx–)

3 Serial Number (000000000–1PGL13150)

4 Serial Number (1PGL13151–)

Fig. 3 – Oil and Water Pump Group

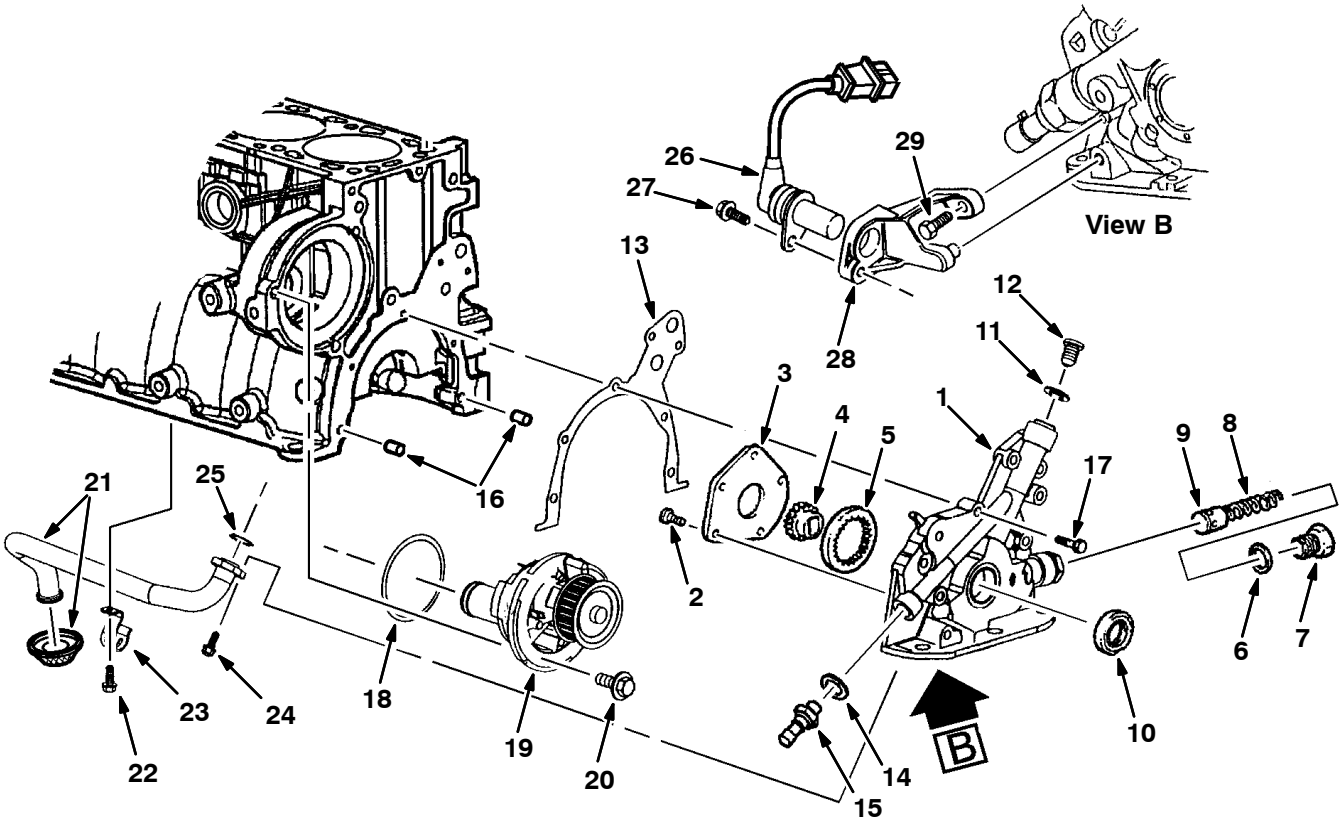

G, LP

Fig. 3 – Oil and Water Pump Group

	Ref.	Part No.		Description	Qty.
▽	1	372572		Pump, Oil	1
▲	2	371947		Bolt, Cover, Oil Pump, M6 X 14	5
▲	3	371948		Cover, Pump, Oil	1
▲	4	371949		Gear, Ring, Drive, Oil Pump	1
▲	5	371950		Gear, Drive, Oil Pump	1
▲	6	371998		Gasket, Plug, Relief Valve,Oil Press	1
▲	7	371994		Plug, Bore, Valve, Relief, Oil Press	1
▲	8	371993		Spring, Valve, Relief, Oil Press	1
	9	371997		Valve, Relief, Oil Press	1
	10	372005		Seal, Org, Oil Pump	1
	11	371951		Seal, Org, Hsng, Oil Pump	1
	12	371952		Plug, Hsng, Oil Pump	1
	13	371984		Gasket, Pump, Oil	1
	14	371987		Seal, Org, Press Switch / Drain Plug	1
	15	371996	3	Switch, Indicator, Oil Press	1
	15	9008197	4	Switch, Indicator, Oil Press [2010]	1
	16	371983		Pin, Ring, Lock, Hsng, Water Pump	2
	17	371986		Bolt, Pump, Oil	6
	18	372567		Seal, Org, Water Pump	1
	19	371981		Pump, Water [Gm]	1
	20	371980		Bolt, Cover, Water Pump	3
	21	372001		Screen, Oil Pump, W/ Suc Pipe	1
	22	371991		Bolt, Bracket,Screen,Oil Pump,M6x1x1	1
	23	372000	1	Bracket, Screen, Oil Pump	1
	23	384966	2	Bracket, Screen, Oil Pump	1
	24	371990		Bolt, Oil Pump Screen/Camshaft Cover	2
	25	371988		Seal, Ring, Pipe, Suc, Oil Pump	1
	26	372002		Sensor, Position, Cshft	1
	27	384968		Bolt, Bracket, Sensor,Cshft Position	1
	28	372003		Bracket, Sensor, Position, Cshft	1
	29	372004		Bolt, Sensor, Position, Cshft	3

1 Serial Number (000000–xxxxxx)

2 Serial Number (xxxxxx–)

3 Tennant Serial number (000000–003122)

4 Tennant Serial number (003123–)

Fig. 4 – Oil Pan and Filter Group

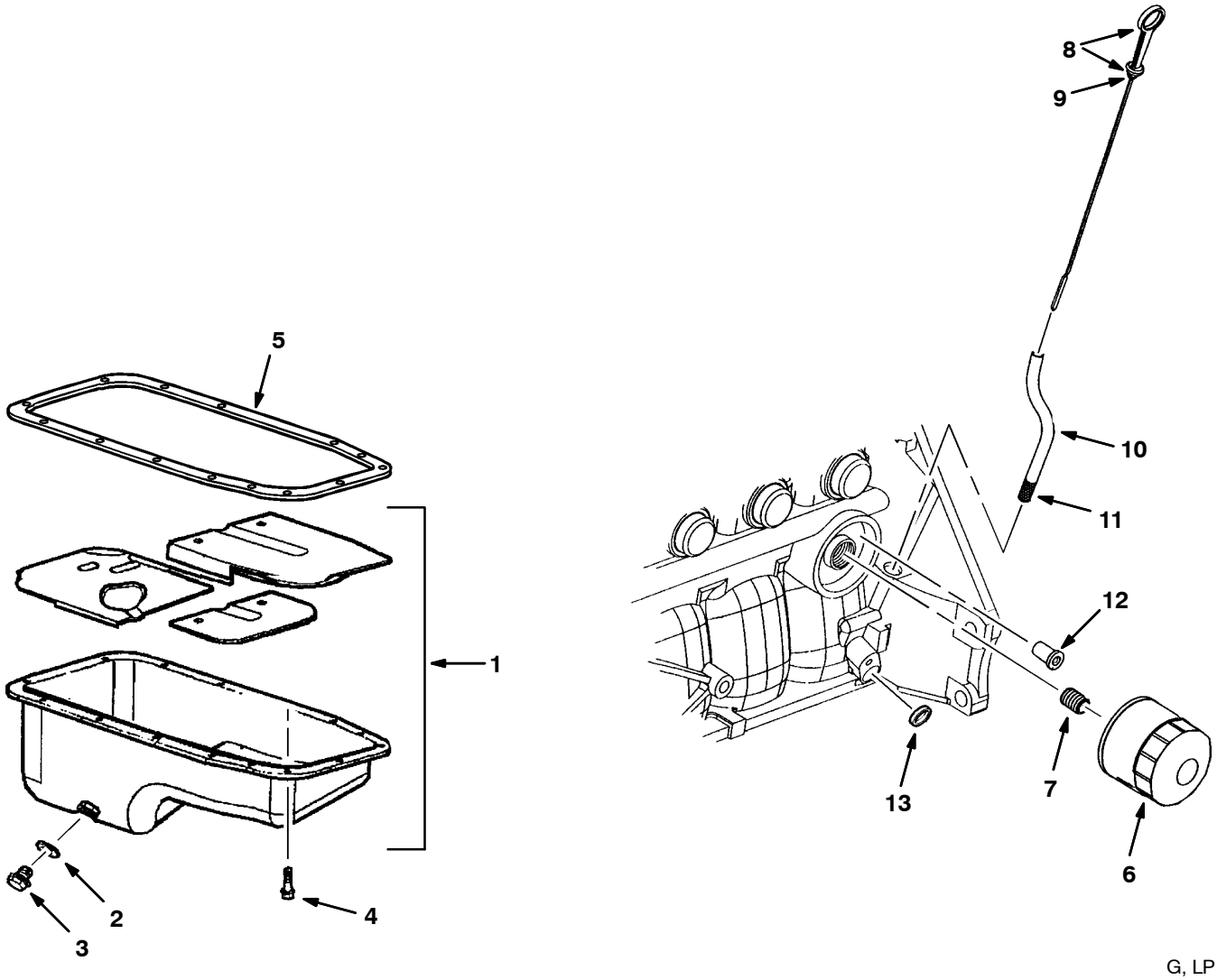

G, LP

	Ref.	Part No.		Description	Qty.
▽	1	371960		Pan, Oil, W/ Baffle / Plug / Seal	1
▲	2	371987		Seal, Org, Press Switch / Drain Plug	1
▲	3	371992		Plug, Drain, Oil Pan, M14 X 1.5 X 12	1
	4	371961	1	Bolt, M06 X 1.00 X 13mm	15
	4	384962	2	Bolt, Pan, Oil	15
	5	371959		Gasket, Pan, Oil	1
	6	371972		Element, Fltr, Oil, Eng, Spin–On (GM)	1
	7	371973		Fitting, Fltr, Oil	1
▽	8	372560		Dipstick, Oil	1
▲	9	371995		Seal, Org, Cap, Fltr, Oil	1
	10	371940		Tube, Ds	1
	11	371941		Sealant, Tube, Ds	1
	12	371975		Valve, By–Pass, Oil Fltr	1
	13	371943		Plug, Hole, Core, Eng Block	1

1 Serial Number (000000–xxxxxx)

2 Serial Number (xxxxxx–)

Fig. 5 – Manifold Group

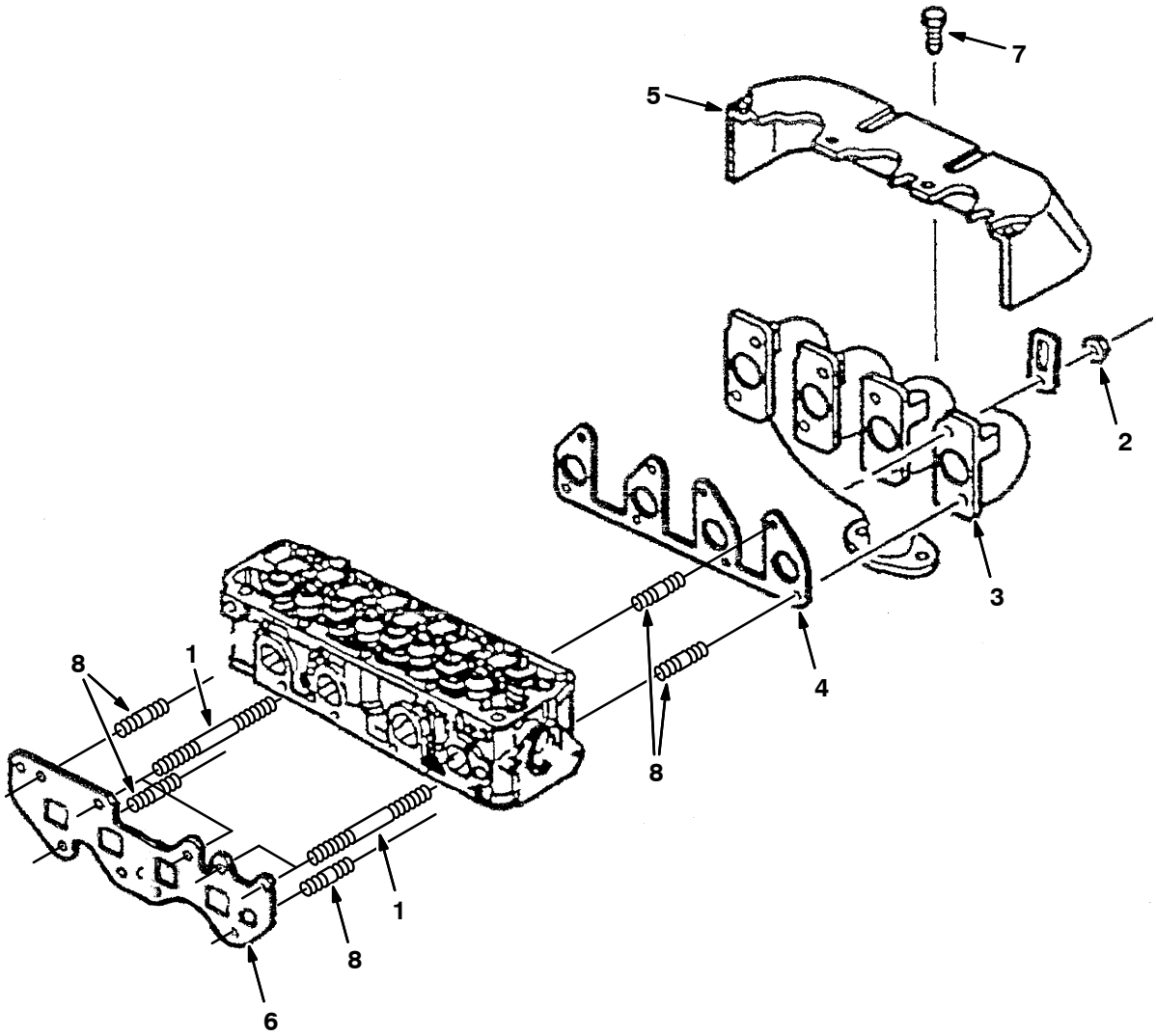

G, LP

Ref.	Part No.	Description	Qty.
1	372021	Stud, Manifold, M8 X 96	4
2	372049	Nut, Manifold, Exhaust, M8 X 1.25	8
3	372050	Manifold, Exhaust	1
4	372051	Gasket, Manifold, Exhaust	1
5	372052	Shield, Manifold, Exhaust	1
6	372053	Gasket, Manifold, Intake	1
7	372066	Bolt, Shield, Manifold, Exhaust	5
8	372020	Stud, Manifold, M8 X 28	13

Fig. 6 – Camshaft Group

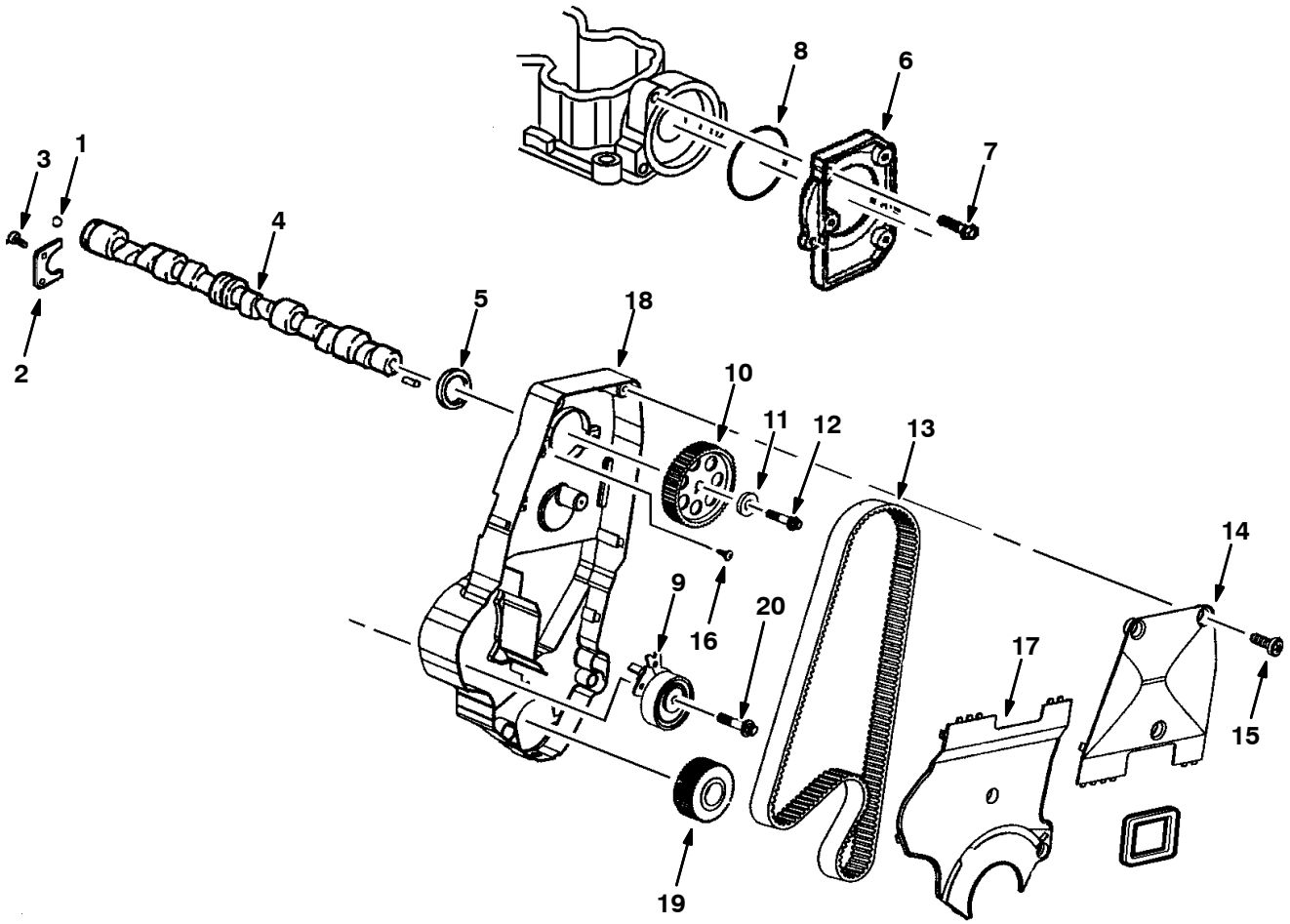

G, LP

Fig. 6 – Camshaft Group

Ref.	Part No.	Description	Qty.
1	372009	Ball, Camshaft	1
2	372010	Retainer, Camshaft	1
3	372011	Bolt, Retainer, Camshaft, M6 X 1 X 16	2
4	372012	Camshaft	1
5	372013	Seal, Org, Bolt, Cover, Camshaft Hsng	1
6	372014	Cover, Hsng, Camshaft	1
7	372015	Bolt, Cover, Camshaft, M6 X 1 X 22	3
8	372016	Seal, Org, Bolt, Cover, Camshaft Hsng	1
9	9004674	Pulley, Tension, Belt, Timing	1
10	372040	Sprocket, Camshaft	1
11	372017	Washer, Sprkt, Camshaft	1
12	372041	Bolt, Sprocket, Camshaft, M10x1.25x60	1
13	1057029	Belt, Timing [Gm1.6l]	1
14	372043	Cover, Belt, Timing, Upper Front	1
15	371961	Bolt, Eng Cover, M6 X 1 X 13	6
16	372046	Bolt, Tensioner, Timing Belt,M8x1.25x48	1
17	372044	Cover, Belt, Timing, Lower Front	1
18	372616	Housing, Camshaft	1
19	388552	Sprocket, Crankshaft	1
20	9004675	Bolt, Tensioner [GM]	1

Fig. 7 – Ignition Group

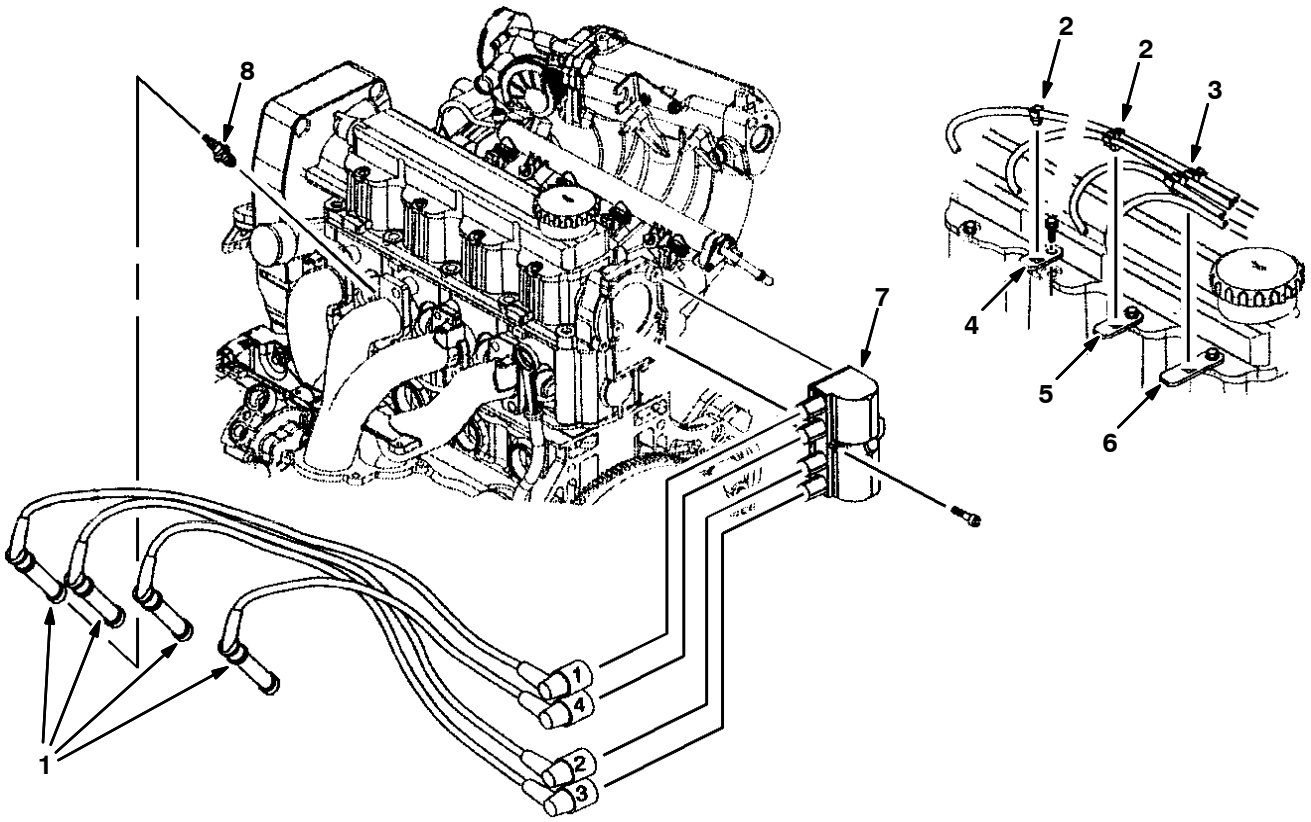

G, LP

Ref.	Part No.	Description	Qty.
1	372603	Wire Set, Sparkplug [1.6l]	1
2	372055	Retainer, Sparkplug, 2 Way	2
3	372056	Retainer, Sparkplug, 3 Way	1
4	372057	Bracket, Retaining, Wire, Sparkplug	1
5	372058	Bracket, Retaining, Wire, Sparkplug	1
6	372059	Bracket, Retaining, Wire, Sparkplug	1
7	372060	Coil, Ignition	1
8	372575	Sparkplug	4

SECTION 6

Contents **Page**

Fig. 1 – Cylinder Block Group 6-2
Fig. 2 – Rocker Cover Group 6-4
Fig. 3 – Cylinder Head Group 6-5
Fig. 4 – Front Cover and Oil Pan Group 6-6
Fig. 5 – Camshaft and Valve Group 6-8
Fig. 6 – Piston and Crankshaft Group 6-10
Fig. 7 – Balancer Group 6-11
Fig. 8 – Oil Pump and Pressure Switch Group 6-12
Fig. 9 – Water Pump Group 6-13
Fig. 10 – Intake Manifold Gasket Group . . . 6-14
Fig. 11 – Exhaust Manifold Gasket Group . . 6-16
Fig. 12 – Fan Tensioner and Pump Mount Group 6-17
Fig. 13 – Flywheel Group 6-18
Fig. 14 – Ignition Coil and Spark Plug Group 6-19
Fig. 15 – Starter / Alternator Group 6-20
Fig. 16 – Remote Oil Filter Group 6-21
Fig. 17 – Coolant Group 6-22
Fig. 18 – DSR Coolant Group, LPG Engine 6-23
Fig. 19 – Electrical Group 6-24
Fig. 20 – Fuel Rail Group, Gasoline Engine 6-26
Fig. 21 – Throttle Body Group, Gasoline Engine 6-27
Fig. 22 – Throttle Body Group, LPG Engine 6-28
Fig. 23 – Vaporizer Group, LPG Engine . . . 6-29
Fig. 24 – Electronic Pressure Regulator (EPR) Group, LPG Engine 6-30

Fig. 1 – Cylinder Block Group

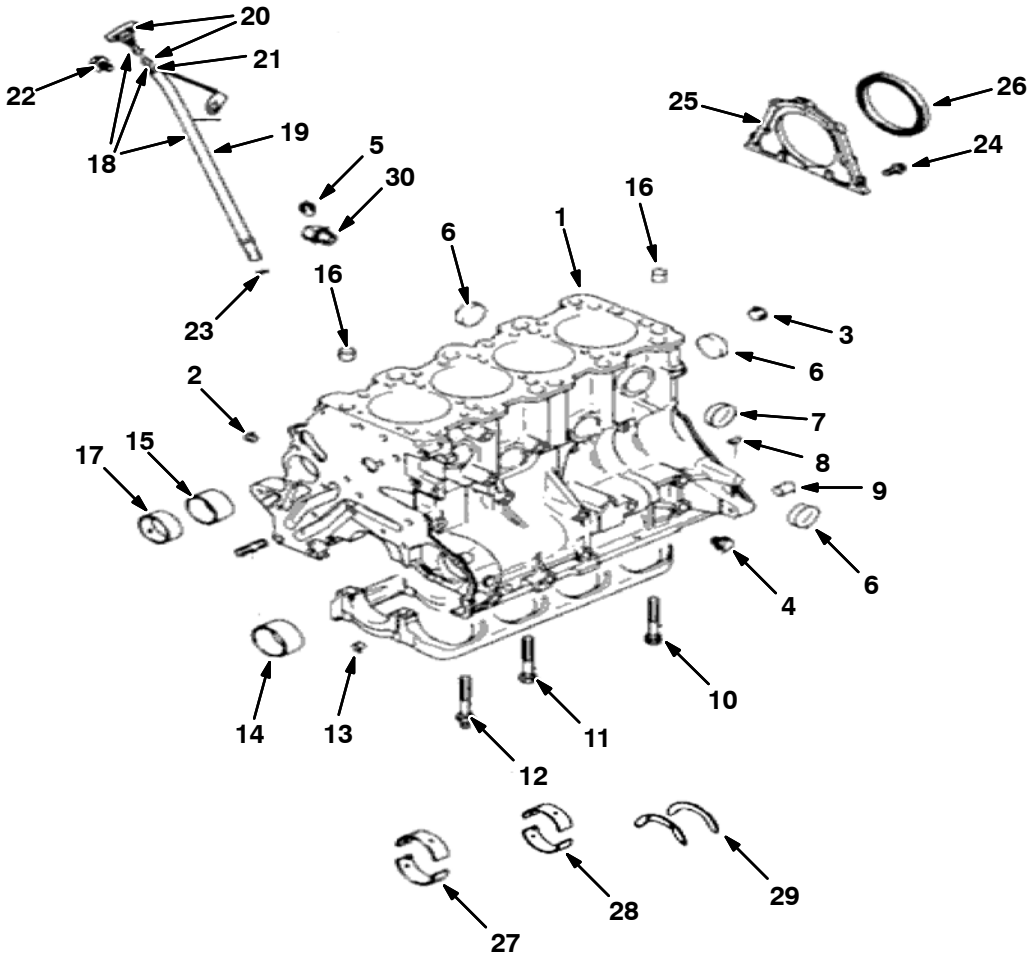

Fig. 1 – Cylinder Block Group

	Ref.	Part No.	Description	Qty.
▽	1	9010419	Block Assy, Cylinder	1
▲	2	9010420	Plug, Taper	2
▲	3	9010421	Plug, Taper	1
▲	4	9010422	Plug	1
▲	5	9010423	Plug, Taper	1
▲	6	9010424	Cap, Seal	7
▲	7	9010425	Cap, Seal	2
▲	8	9010426	Pin, Dowel	2
▲	9	9010427	Bushing, Knock	2
▲	10	9010428	Bolt, Cap, Bearing	2
▲	11	9010429	Bolt, Cap, Bearing	7
▲	12	9010430	Bolt, Cap, Bearing	1
▲	13	9010431	Bushing	2
▲	14	9010432	Bearing, Std, Balancer	1
▲	14	9010433	Bearing, Oversize [1.0]	1
▲	15	9010434	Bearing, Std, Balancer	1
▲	15	9010435	Bearing, Oversize [1.0]	1
▲	16	9010436	Bushing, Knock	2
▲	17	9010458	Bearing, Shaft, Std, Balancer	1
▲	17	9010459	Bearing, Shaft, Balancer [Ovrsz]	1
▽	18	9010439	Dipstick Assy, Guage	1
▲	19	9010440	Dipstick, Guage, Guide	1
▲▽	20	9010437	Dipstick, Rod, Guage	1
▲▲	21	9010438	O–Ring	1
	22	9010441	Bolt, Flange	1
	23	9010442	O–Ring	1
	24	9010444	Bolt, Flange	5
	25	9010445	Seal, Case, Oil, Rear	1
	26	9010446	Seal, Oil	1
	27	9010447	Bearing, Cshft [Green Std 1,2,4,5]	4
	27	9010448	Bearing, Cshft [Yellow Std 1,2,4,5]	4
	27	9010449	Bearing, Cshft[No Color Std 1,2,4,5]	4
	27	9010450	Bearing, Cshft [Lan Std 1,2,4,5]	4
	27	9010451	Bearing, Cshft [Red Std 1,2,4,5]	4
	28	9010452	Bearing, Cshft [Green Std 3]	1
	28	9010453	Bearing, Cshft [Yellow Std 3]	1
	28	9010454	Bearing, Cshft [No Color Std 3]	1
	28	9010455	Bearing, Cshft [Lan Std 3]	1
	28	9010456	Bearing, Cshft [Black Std 3]	1
	29	9010457	Bearing, Thrust, Cshft	1
	30	9010443	Drain, Water, Joint	1

Fig. 2 – Rocker Cover Group

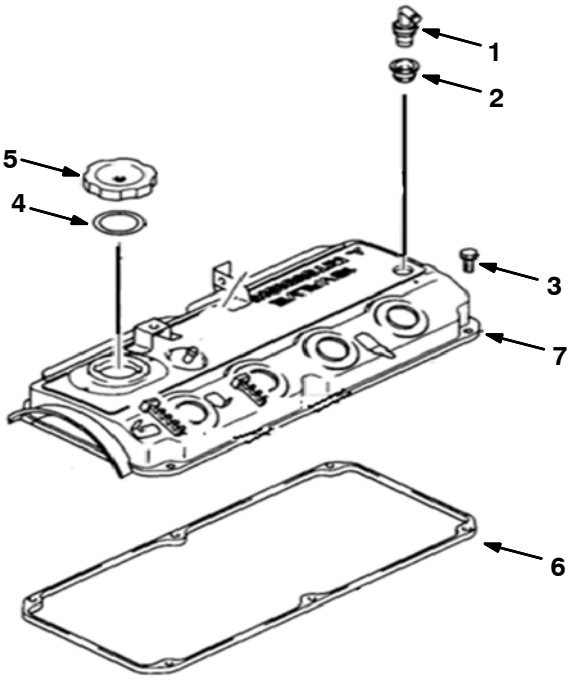

Ref.	Part No.	Description	Qty.
1	9010460	Valve, Pcv	1
2	9010461	Valve, Gasket, Pcv	1
3	9010462	Bolt, Rocker, Cover	6
4	9010463	Gasket, Oil, Filler, Cap	1
5	9010464	Cap, Oil, Filler	1
6	9010465	Gasket, Cover, Rocker	1
7	9010466	Cover Assy, Rocker	1

Fig. 3 – Cylinder Head Group

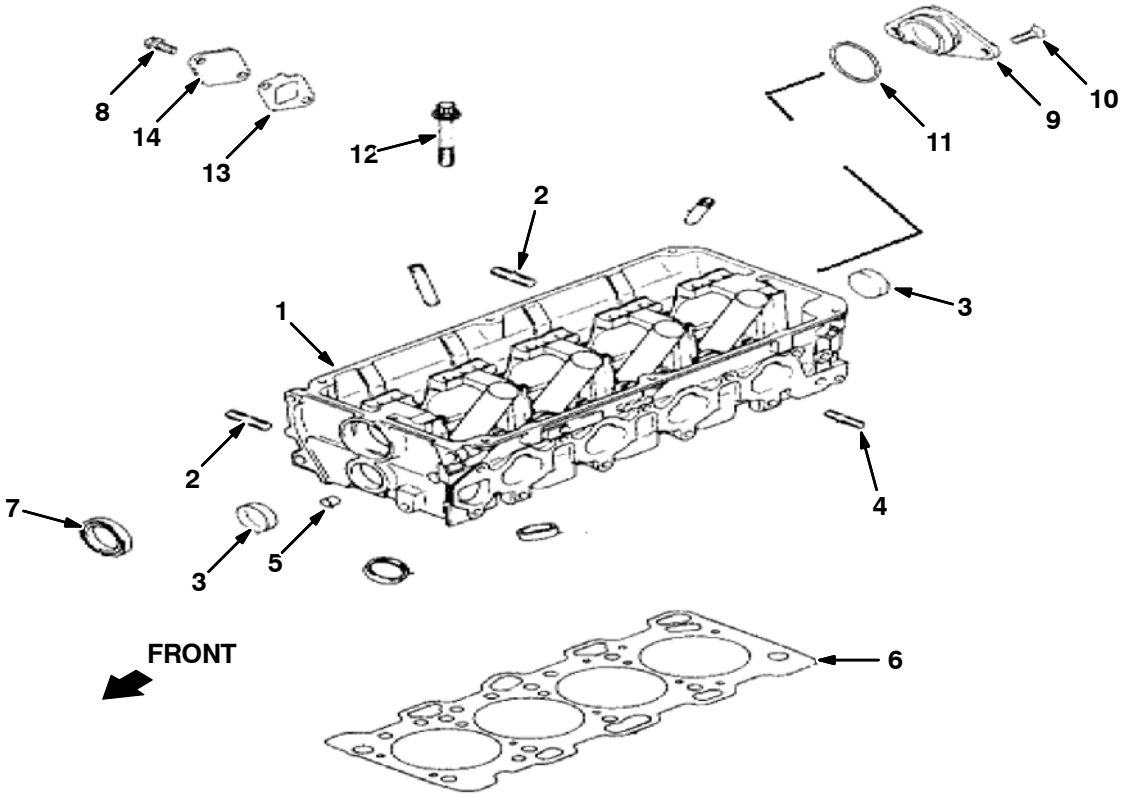

	Ref.	Part No.		Description	Qty.
▽	1	9010467	1	Head Assy, Cylinder	1
▲	2	9010473		Stud	2
▲	3	9010469		Seal, Cap	2
▲	4	9010470		Stud	3
▲	5	9010431		Bushing	2
▽	1	9014162	2	Head Kit, Cyl [Mitsubishi 2015 12mm]	1
▲	2	9010473		Stud	2
▲	3	9010469		Seal, Cap	2
▲	4	9010470		Stud	3
▲	5	9010431		Bushing	2
	6	9010468		Gasket, Cylinder, Head	1
	7	9010471		Seal, Cam Shaft, Front	1
	8	9010441		Bolt, Flange	2
	9	9010480		Thurst, Case	1
	10	9010481		Screw	2
	11	9010482		O–Ring	1
	12	9010484		Cylinder Assy, Head, Bolt	10
	13	9010483		Gasket	1
	14	9010485		Cover	1

1 Serial Number (006000–007114)

2 Serial Number (007115–)

Fig. 4 – Front Cover and Oil Pan Group

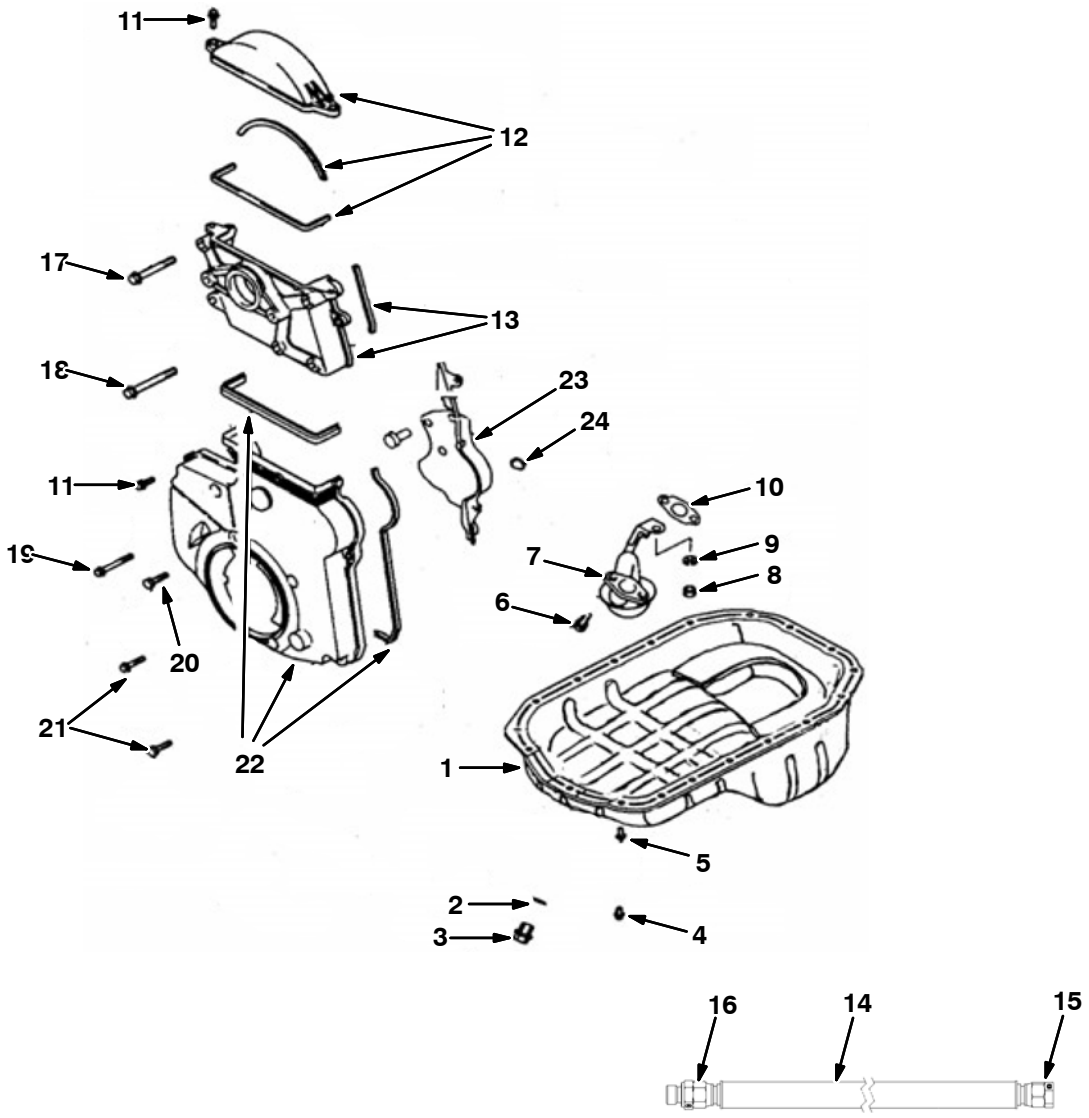

Fig. 4 – Front Cover and Oil Pan Group

	Ref.	Part No.	Description	Qty.
▽	1	9010487	Pan, Oil	1
▲	2	9010488	Gasket, Plug, Drain, Oil	1
▲	3	9010489	Plug, Oil, Drain	1
	4	9010490	Bolt, Flange	17
	5	9010491	Bolt, Flange	2
	6	9010492	Washer, Bolt	2
	7	9010493	Screen, Oil	1
	8	9010494	Nut, Strainer	1
	9	9010495	Washer, Strainer	1
	10	9010496	Gasket, Screen	1
	11	9010497	Bolt, Flange	8
	12	9010498	Cover Assy, Front, Upper [T–Belt]	1
	13	9010502	Bracket Assy, Coil, Ignition	1
	14	9010311	Hose, Drain, Oil [Mit 20/24m]	1
	15	9010312	Plug, Flare, 37deg [Mit]	1
	16	9010313	Fitting, 37deg [Mit]	1
	17	9010503	Bolt, Flange	3
	18	9010504	Bolt, Flange	1
	19	9010505	Bolt, Flange	1
	20	9010506	Bolt	2
	21	9010507	Bolt	2
	22	9010508	Cover, Lower, Front [T–Belt]	1
	23	9010511	Cover, Rear [T–Belt]	1
	24	9010512	Plug, Rubber	1

Fig. 5 – Camshaft and Valve Group

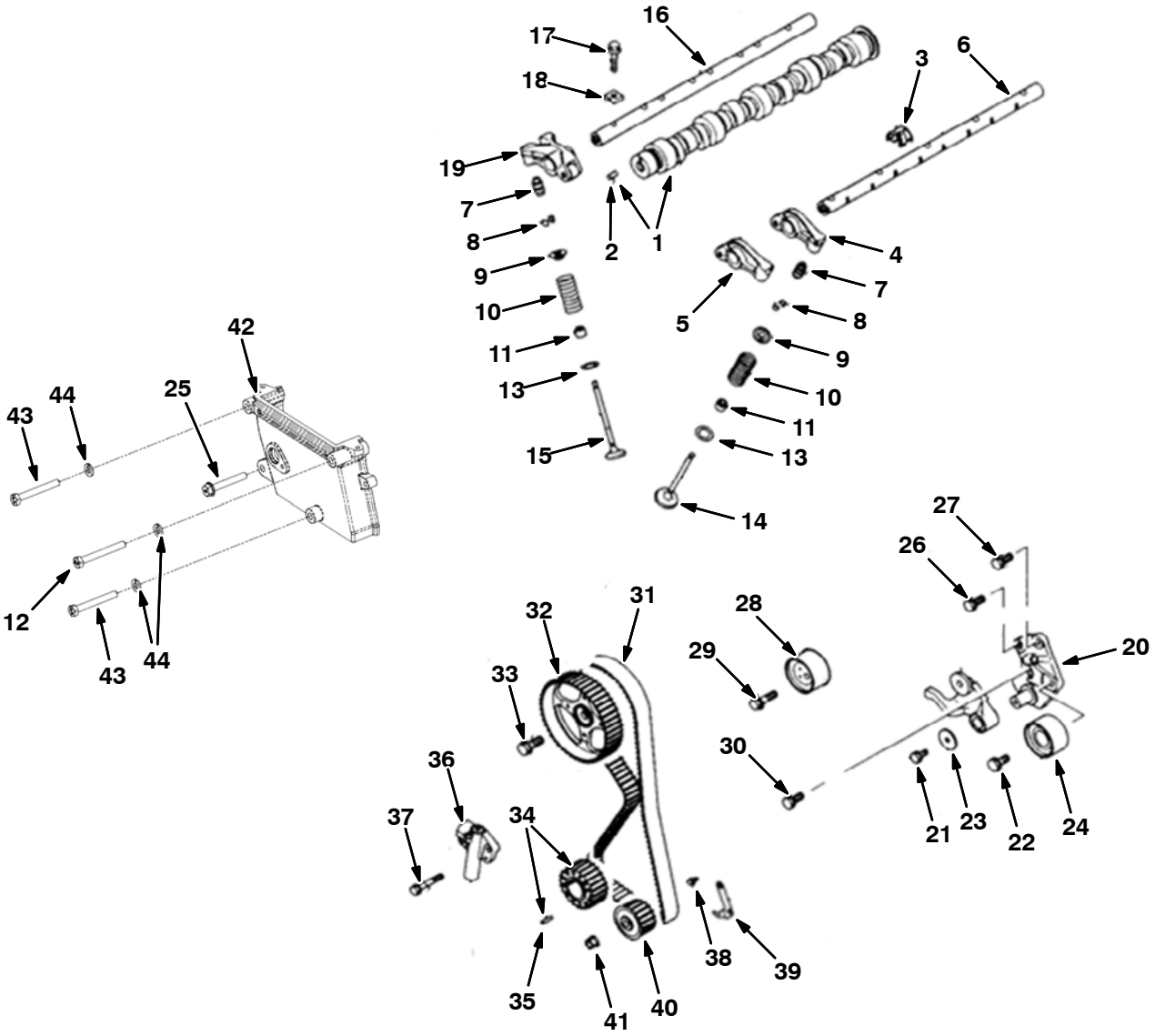

Fig. 5 – Camshaft and Valve Group

	Ref.	Part No.	Description	Qty.
▽	1	9010530	Camshaft Assy	1
▲	2	9010535	Pin, Dowel	1
	3	9010532	Shaft, Spring, Rocker	4
	4	9010533	Arm Assy, Rocker [B]	4
	5	9010534	Arm Assy, Rocker [A]	4
	6	9010531	Shaft, Arm , Rocker	1
	7	9010536	Adjuster Assy, Lash	16
	8	9010537	Valve, Spring, Lock	32
	9	9010538	Valve, Spring, Retainer	16
	10	9010539	Valve, Spring	16
	11	9010540	Valve, Seal, Stem	16
	12	9010253	Bolt, M8–1.25 X 70 Hxhd [Mit]	1
	13	9010541	Valve, Spring, Seat	16
	14	9010542	Valve, Inlet	8
	15	9010543	Valve, Exhaust	8
	16	9010544	Shaft, Arm, Rocker	1
	17	9010545	Bolt, Flange	13
	18	9010546	Shaft, Cap, Rocker	13
	19	9010547	Arm Assy, Rocker [C]	4
▽	20	9010548	Bracket, Pulley, Tensioner	1
▲	21	9010549	Bolt, Washer	1
▲	22	9010550	Bolt, Washer	1
▲	23	9010551	Washer	1
▲	24	9010552	Pulley, Idler	1
	25	9010254	Bolt, M8–1.25 X 55 Fi Hd [Mit]	1
	26	9010554	Bolt, Seal	1
	27	9010555	Bolt, Washer	1
	28	9010556	Pulley, Tensioner	1
	29	9010557	Bolt, Washer	1
	30	9010550	Bolt, Washer	1
	31	9010559	Belt, Timing	1
	32	9010560	Sprocket, Camshaft	1
	33	9010561	Bolt, Flange	1
▽	34	9010562	Sprocket Assy, Cshft	1
▲	35	9010563	Pin, Spring	1
	36	9010564	Tensioner	1
	37	9010565	Bolt, Flange	2
	38	9010491	Bolt, Flange	2
	39	9010567	Bracket, Indicator, Timing	1
	40	9010568	Sprocket, Pump, Oil	1
	41	9010569	Nut	1
	42	9010250	Cover, Timing, Gear [Mit 2.0/2.4l]	1
	43	9010251	Bolt, M8–1.25 X 65 Hxhd [Mit]	2
	44	9010252	Washer, Lock, M8 [Mit]	3

Fig. 6 – Piston and Crankshaft Group

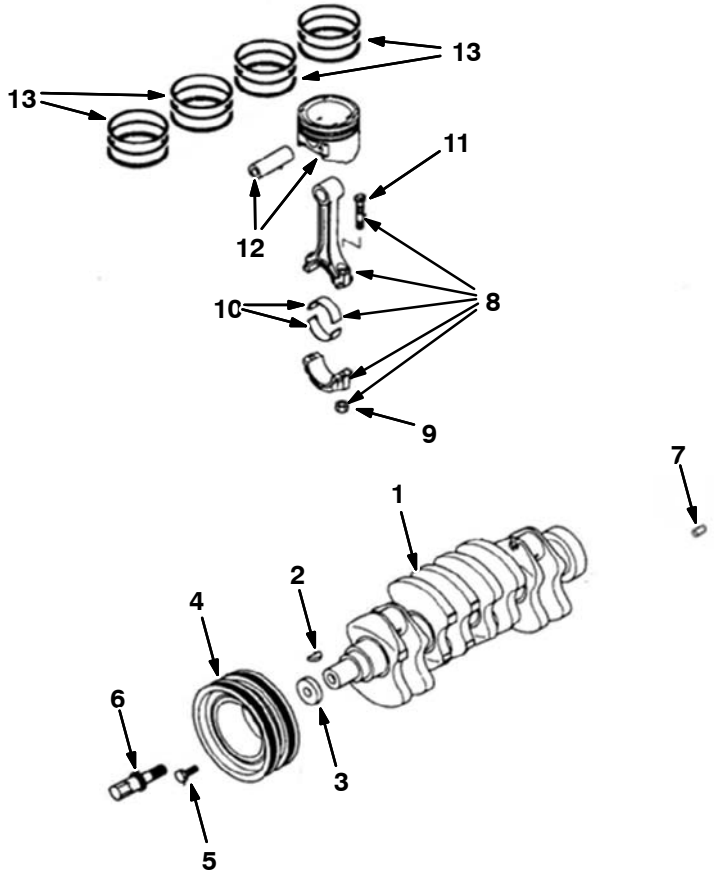

	Ref.	Part No.	Description	Qty.
	1	9010513	Crankshaft Assy	1
	2	9010514	Key	1
	3	9010515	Washer, Special	1
	4	9010516	Pulley Assy, Damper, Torsional	1
	5	9010517	Bolt, Washer	4
	6	9010518	Bolt, Sprocket, Cshft	1
	7	9010519	Pin, Dowel	1
▽	8	9010520	Rod Assy, Connecting	4
▲	9	9010521	Nut	8
▲	10	9010522	Bearing, Rod, Connect [Yellow Std]	4
▲	10	9010523	Bearing, Rod, Connect [No Color Std]	4
▲	10	9010524	Bearing, Rod, Connect [Lan Std]	4
▲	11	9010525	Bolt, Connecting	8
	12	9010526	Piston, Pin [Std A]	4
	12	9010527	Piston, Pin [Std B]	4
	12	9010528	Piston, Pin [Std C]	4
	13	9010529	Piston Set, Ring	1

Fig. 7 – Balancer Group

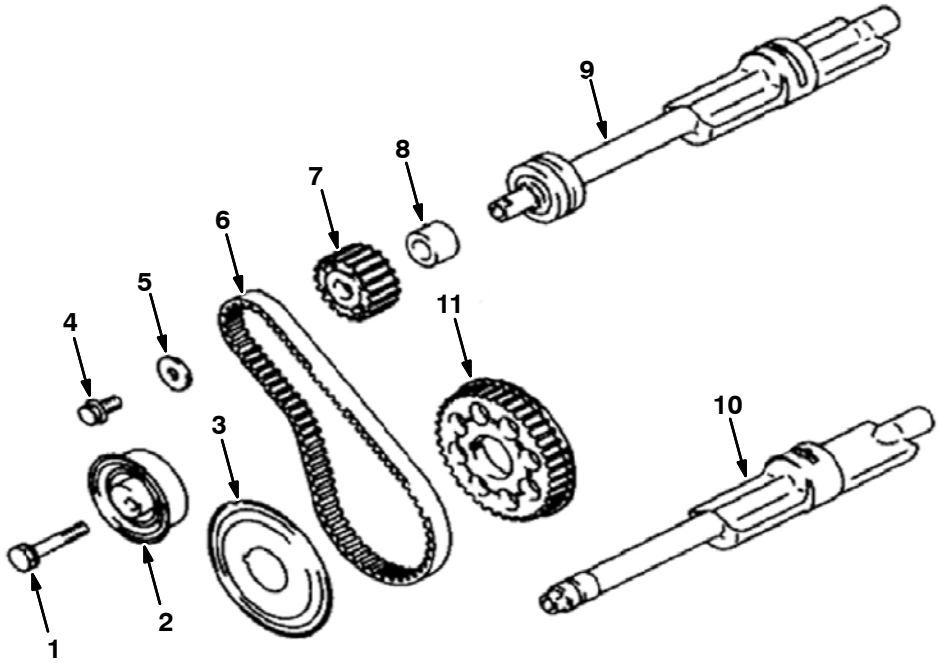

Ref.	Part No.	Description	Qty.
1	9010570	Bolt, Belt, Balancer, Train	1
2	9010571	Tensioner, Timing, Belt	1
3	9010572	Flange, Sprocket, Cshft	1
4	9010600	Bolt, Flange	1
5	9010574	Washer, Belt, Balancer, Train	1
6	9010575	Belt, Timing	1
7	9010576	Sprocket, Shaft, Balancer	1
8	9010577	Spacer, Belt, Balancer, Train	1
9	9010578	Shaft, Right, Balancer	1
10	9010579	Shaft, Left, Balancer	1
11	9010580	Sprocket, Cshft	1

Fig. 8 – Oil Pump and Pressure Switch Group

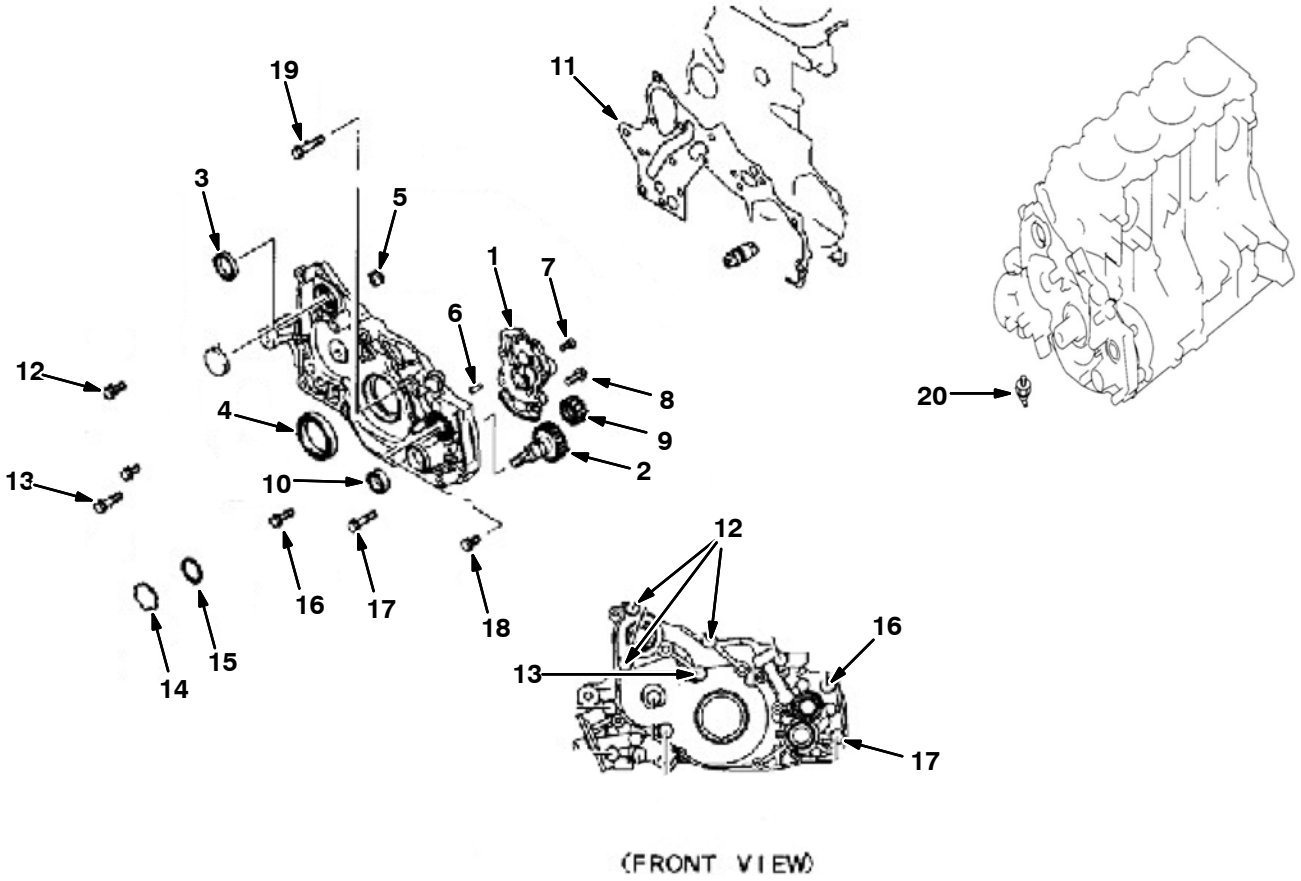

	Ref.	Part No.	Description	Qty.
▽	1	9010582	Pump, Oil	1
▲	2	9010592	Pump, Gear, Drive, Oil	1
▲	3	9010585	Seal, Oil	1
▲	4	9010586	Seal, Oil	1
▲	5	9010587	Plug, Tapper	1
▲	6	9010426	Pin, Dowel	2
▲	7	9010589	Screw	1
▲	8	9010590	Bolt, Flange	4
▲	9	9010591	Pump, Gear, Oil	1
▲	10	9010601	Seal, Oil	1
	11	9010593	Gasket, Case, Front	1
	12	9010594	Bolt, Washer	3
	13	9010595	Bolt, Washer	1
	14	9010596	Plug, Cap	1
	15	9010597	O–Ring	1
	16	9010598	Bolt, Flange	1
	17	9010599	Bolt, Flange	1
	18	9010600	Bolt, Flange	1
	19	9010583	Bolt, Flange	1
	20	9010259	Sender, Oil, Press [Mit] (3 Prong)	1

Fig. 9 – Water Pump Group

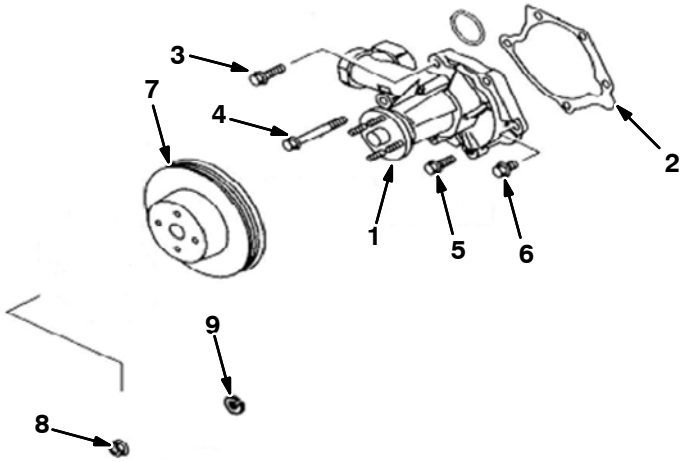

Ref.	Part No.	Description	Qty.
1	9010602	Pump, Water	1
2	9010603	Gasket, Pump, Water	1
3	9010604	Bolt, Flange	1
4	9010503	Bolt, Flange	1
5	9010606	Bolt, Flange	2
6	9010607	Bolt, Flange	1
7	9010612	Pulley, Pump, Water	1
8	9010609	Nut, Flange	4
9	9010610	Washer, Spring	4

Fig. 10 – Intake Manifold Gasket Group

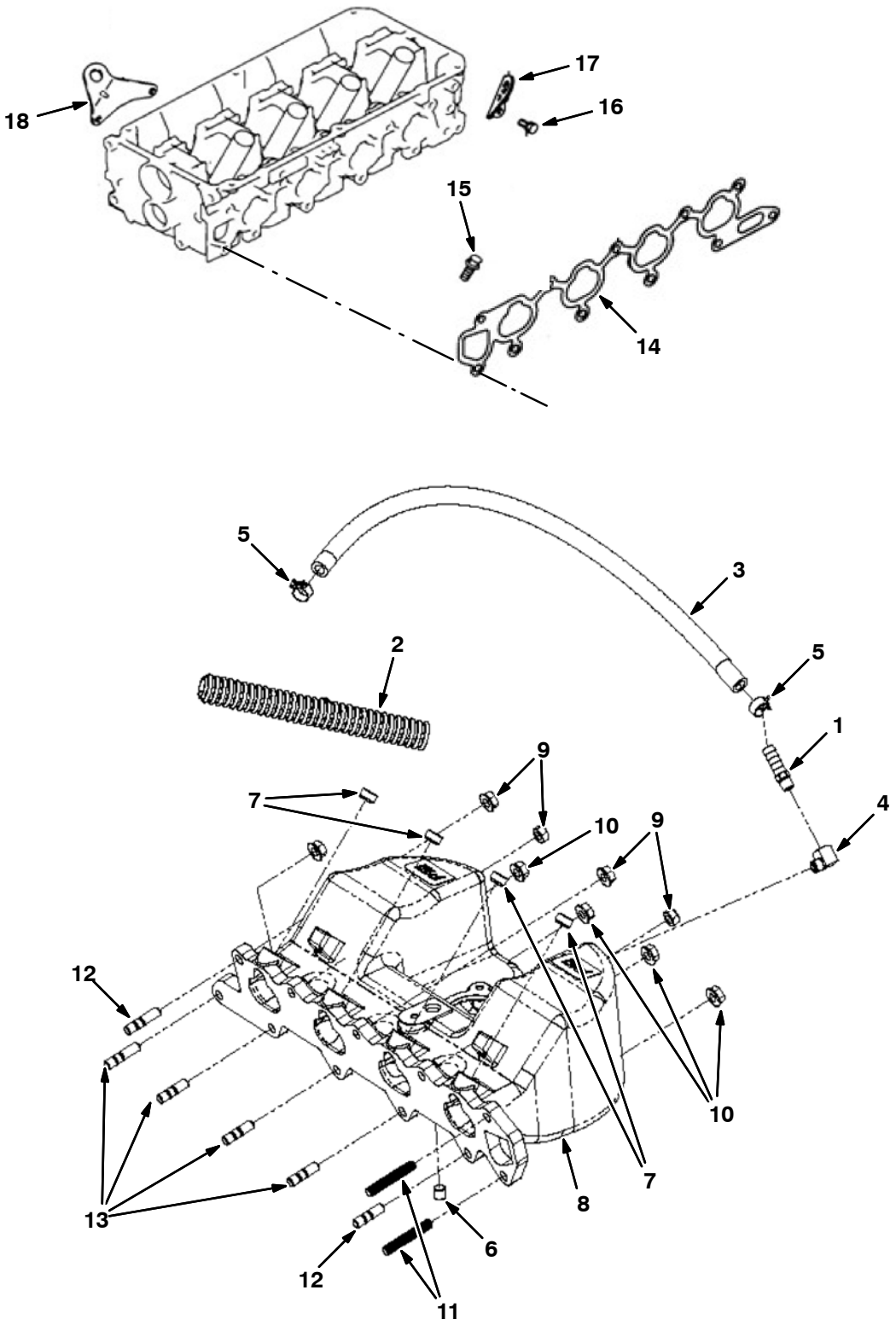

Fig. 10 – Intake Manifold Gasket Group

Ref.	Part No.	Description	Qty.
1	9010382	Fitting, 1/8 Mpt X 3/8 Hb [Mit]	1
2	9010281	Loom, Convoluted, Split 5/8 [Mit]	17”
3	385001	Hose, Fuel, .38d, Rbr[16”L]	20”
4	9010383	Elbow, 1/8m X 1/8f, 90 [Mit]	1
5	9010282	Clamp, 3/8id [Mit Olive Green]	2
6	9010283	Plug, 1/8 Npt, Brs, Skt Hd [Mit]	1
7	9010284	Plug, Injector [Mit]	4
8	9010285	Manifold, Intake [Mit 20/24m Tilt]	1
9	9010286	Nut, M8–1.25 [Mit]	2
10	385015	Nut, Flng, M8	7
11	9010287	Stud, M8–1.25 X 50 Full Thrd [Mit]	2
12	9010288	Stud, M8–1.25 X 35 [Mit Double End]	2
13	9010384	Stud, M8–1.25 X 30 [Mit Double End]	4
14	9010613	Gasket, Manifold, Intake	1
15	9010606	Bolt, Flange	2
16	9010615	Bolt, Manifold, Inlet	1
17	9010617	Hanger, Engine	1
18	9010618	Hanger, Engine	1

Fig. 11 – Exhaust Manifold Gasket Group

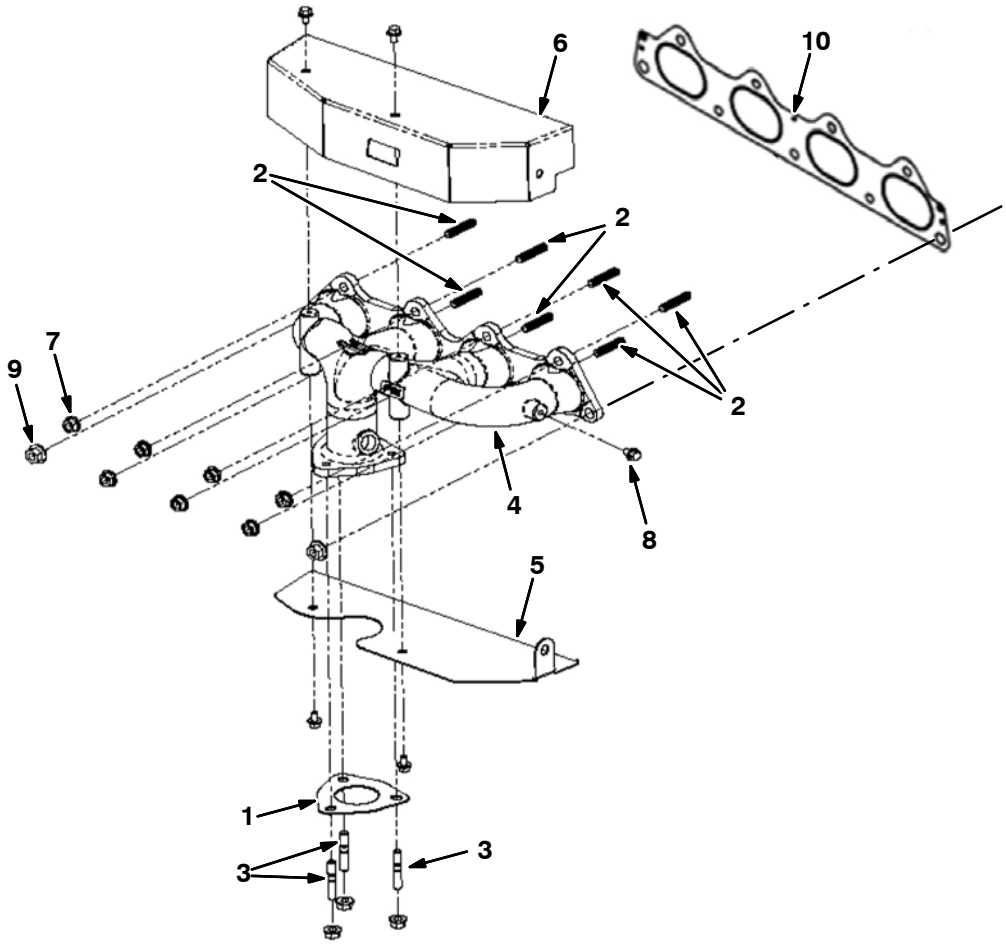

Ref.	Part No.	Description	Qty.
1	9010296	Gasket, Manifold, Exh [Mit]	1
2	9010297	Stud, M8–1.25 X 40 [Mit]	7
3	372020	Stud, Manifold, Intake, M8 X 28	3
4	9010298	Manifold, Exhaust [Mit 2.0/2.4l]	1
5	9010302	Shield, Heat, Lower [Mit 20/24m]	1
6	9010303	Shield, Heat, Upper [Mit 20/24m]	1
7	385015	Nut, Flng, M8	10
8	9010262	Bolt, M6–1.0 X 10 Fl Hd [Mit]	5
9	9010239	Nut, M10–1.25 Flg [Mit]	2
10	9010619	Gasket, Manifold, Exhaust	1

Fig. 12 – Fan Tensioner and Pump Mount Group

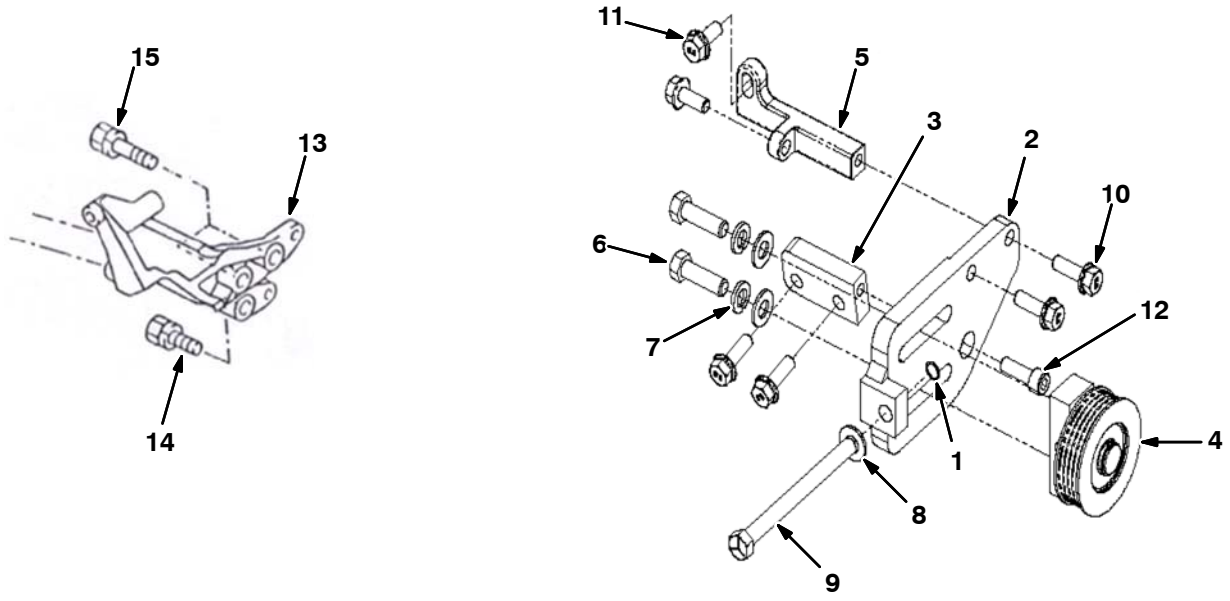

Ref.	Part No.	Description	Qty.
1	371562	Ring, Retaining	1
2	9010222	Plate, Tensioner, Adj [Mit 2.0/2.4l]	1
3	9010223	Bar, Tensioner, Mtg [Mit 2.0/2.4l]	1
4	9010224	Pulley, Tensioner, Assy[Mit2.0/2.4l]	1
5	9010225	Bracket, Tensioner, [Mit 2.0/2.4l]	1
6	9010226	Bolt, 3/8–16 X 1 1/4 Hxhd [Mit]	2
7	371509	Washer, Lock, 0.38	2
8	9010227	Washer, Flat 3/8, Sae	3
9	9010228	Bolt, 3/8–16 X 4.5 [Mit]	1
10	9010229	Bolt, M8–1.25 X 25 [Mit]	4
11	9010230	Bolt, M8–1.25 X 20 Fl Hd [Mit]	2
12	9010231	Bolt, M8–1.25 X 25 Soc Hd [Mit]	1
13	9010623	Bracket, Pump, Mtg	1
14	9010624	Bolt, Washer	1
15	9010625	Bolt, Washer	2

Fig. 13 – Flywheel Group

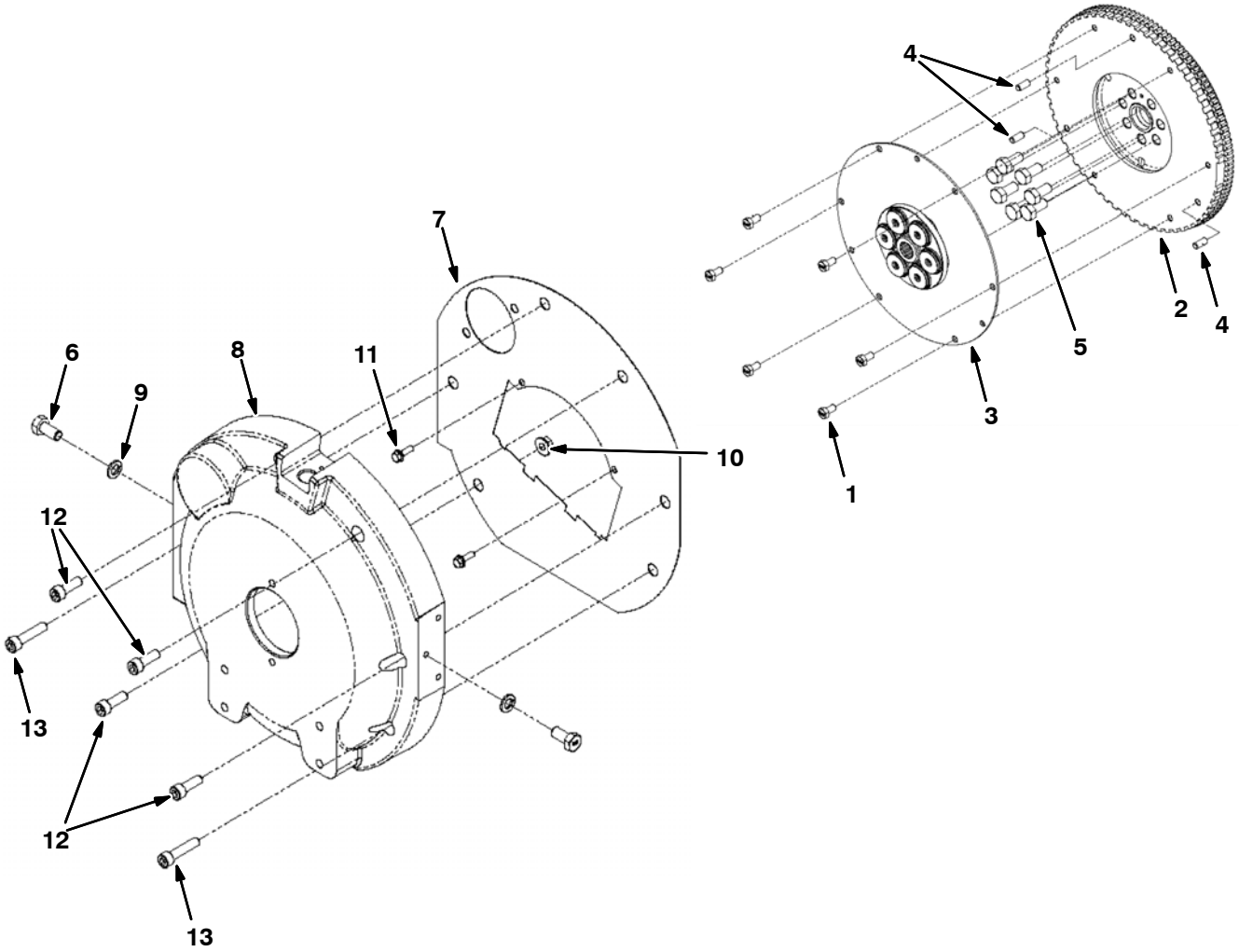

Ref.	Part No.	Description	Qty.
1	9010232	Bolt, M8–1.25 X 15, Hx Hd [Mit]	6
2	9010233	Flywheel, Flatface [Mit 20/24m]	1
3	9010234	Coupling, Flywheel [Mit20/24m]	1
4	9010235	Pin, Flywheel [Mit 20/20m]	3
5	9010236	Bolt, Flywheel [Mit 20/24m]	7
6	9010359	Bolt, M12–1.75 X 25, Hex Hd [Mit]	2
7	9010237	Cover, Dust [Mit 2.0l]	1
8	9010238	Housing, Flywheel [Mit 2.0l]	1
9	9010360	Washer, Lock, M12 [Mit]	2
10	9010239	Nut, M10–1.25 Flg [Mit]	1
11	9010240	Bolt, M6–1.0 X 20 Fl Hd [Mit]	2
12	9010241	Bolt, M10–1.25 X 30 Soc Hd [Mit]	4
13	9010242	Bolt, M10–1.25 X 45 Soc Hd [Mit]	2

Fig. 14 – Ignition Coil and Spark Plug Group

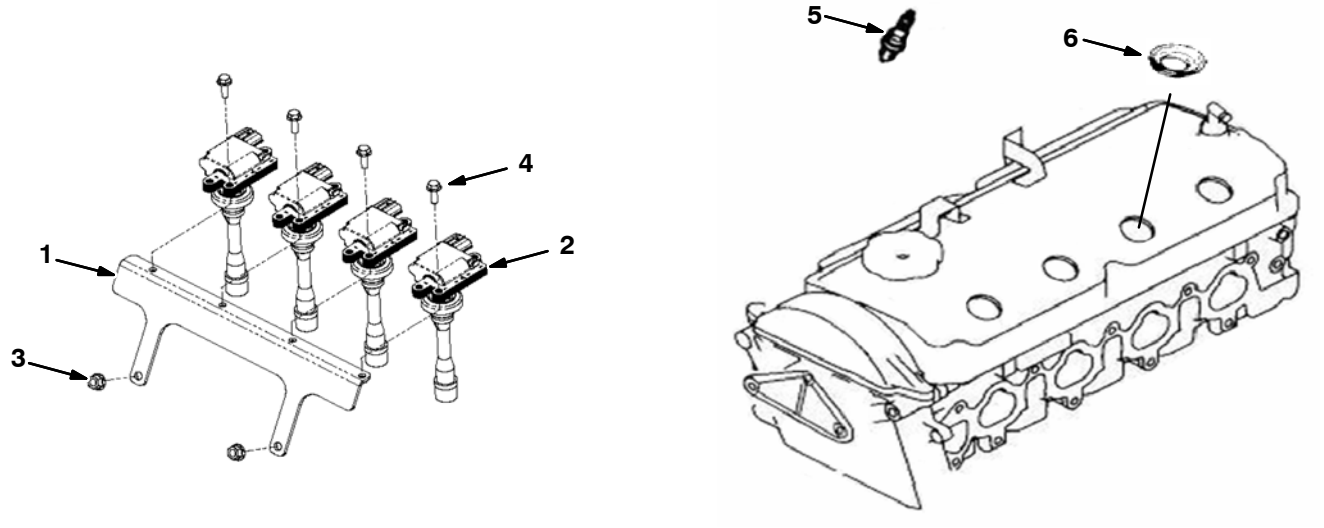

Ref.	Part No.		Description	Qty.
1	9010243		Bracket, Coil [Mit 2.0/2.4l]	1
2	9010244		Coil, Ignition [Mit 2.0/2.4l]	4
3	385015		Nut, Flng, M8	2
4	9010240		Bolt, M6–1.0 X 20 Fl Hd [Mit]	4
5	9010622	1	Plug, Spark [Torch K6rf–11 14mm]	4
5	9014160	2	Plug, Spark [Mitsubishi 2015 12mm]	4
6	9010479		Seal, Oil	4

1 Serial Number (006000–007114)

2 Serial Number (007115–)

Fig. 15 – Starter / Alternator Group

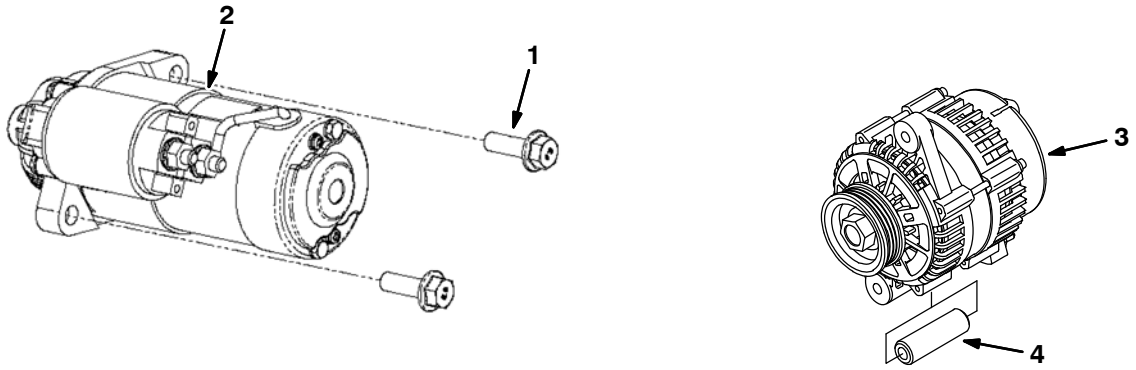

Ref.	Part No.	Description	Qty.
1	9010245	Bolt, M10–1.50 X 30 [Mit]	2
2	9010246	Starter, Motor [Mit 2.0/2.4l]	1
3	9010217	Alternator, 7si [Mit Df Sur–Belt]	1
4	9010219	Spacer, Alternator [Mit 2.0/2.4l]	1

Fig. 16 – Remote Oil Filter Group

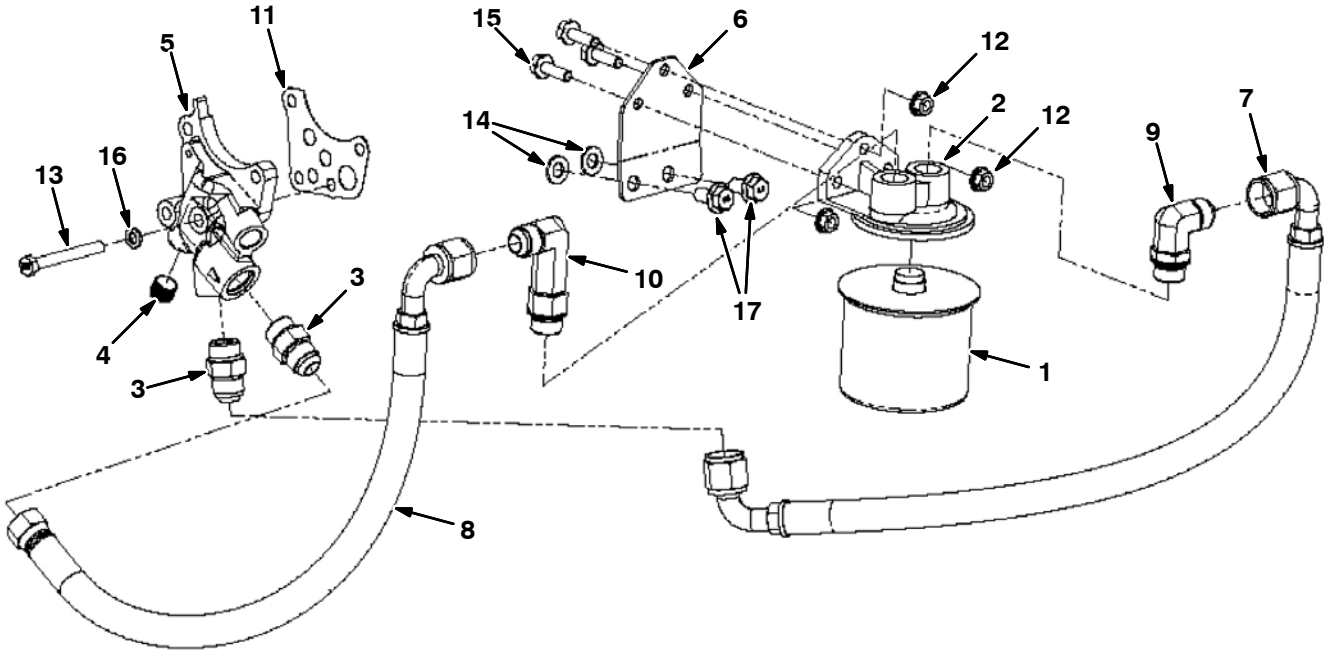

Ref.	Part No.	Description	Qty.
1	393982	Element, Fltr, Oil, Spin–On (Mits)	1
2	371503	Mount, Fltr, Remote	1
3	9010371	Fitting, Str, 10–10 Orb, 37fi [Mit]	4
4	9010372	Plug, 3/8npt X 5/16, Brs [Mit]	1
5	9010373	Adapter, Filter, Oil, Remote [Mit]	1
6	9010374	Bracket, Filter, Oil, Remote [Mit]	1
7	9010375	Hose, 90x90,Filter, Oil, Remote[Mit]	1
8	9010376	Hose, 90xstr,Flter, Oil, Remote[Mit]	1
9	9010628	Elbow	1
10	9010629	Elbow	1
11	9010377	Gasket, Oil, Adapter [Mit 2.0/2.4]	1
12	385015	Nut, Flng, M8	3
13	9010253	Bolt, M8–1.25 X 70 Hxhd [Mit]	1
14	9010630	Washer	2
15	9010229	Bolt, M8–1.25 X 25 [Mit]	3
16	9010380	Washer, Lock, M8 [Mit]	1
17	9010631	Bolt	2

Fig. 17 – Coolant Group

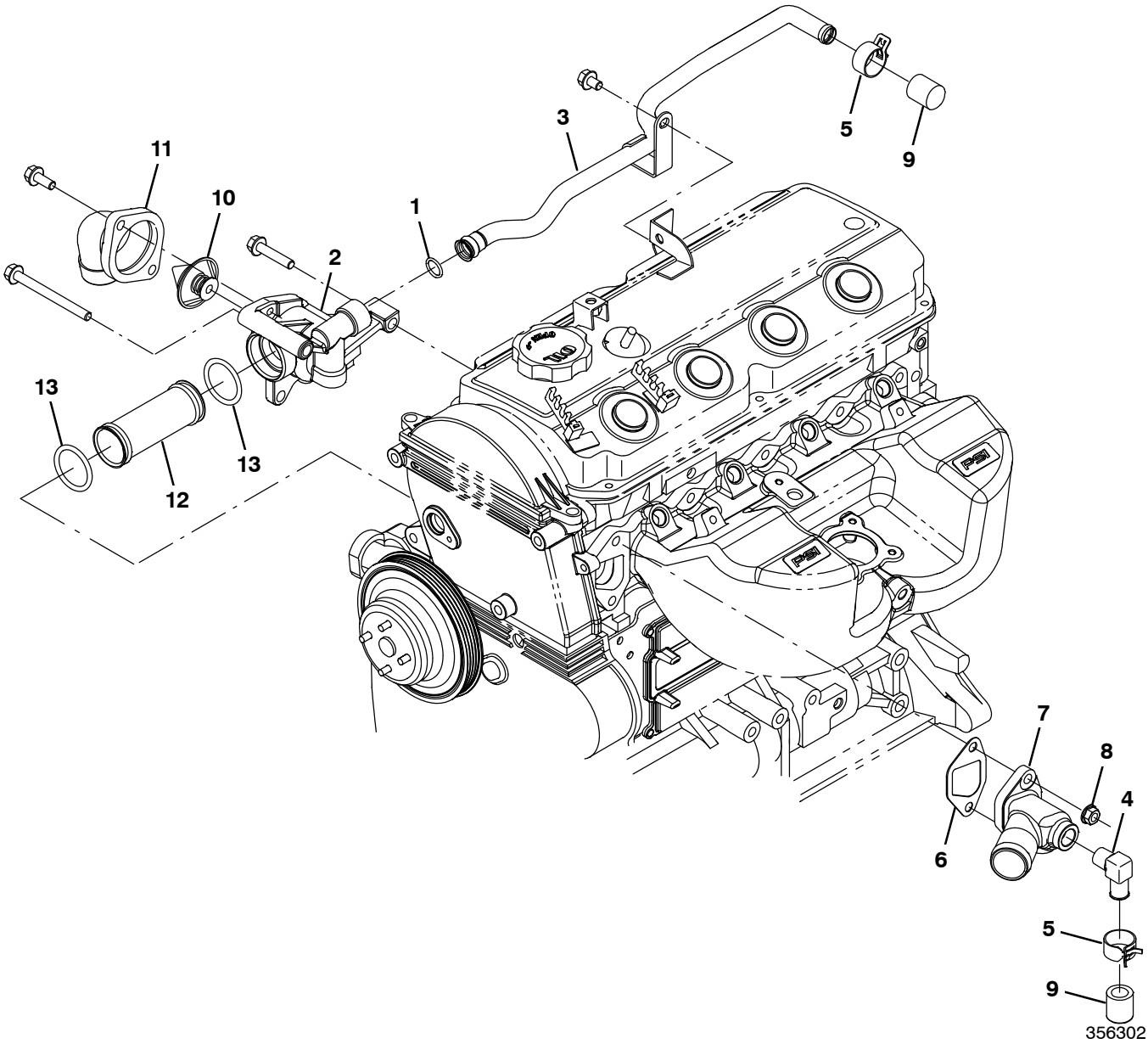

Ref.	Part No.	Description	Qty.
1	9010289	O–Ring [Mit 208 Buna–N]	1
2	9010290	Housing, T–Stat, 2 Holes [Mit]	1
3	9010291	Tube, Water, Line [Mit]	1
4	385011	Fitting, E90	1
5	384979	Clamp, Hose, Spring, 0.62d	2
6	9010632	Gasket, Outlet	1
7	9010294	Outlet, Water, W/Plug [Mit 2.0/2.4l]	1
8	385015	Nut, Flng, M8	2
9	9010295	Cap, Rubber, 5/8id [Mit 2.0/2.4l]	2
10	9010905	Thermostat Kit, Coolant, Replmt [Mitsub]	1
11	9010215	Housing, Thermostat	1
12	9010910	Tube, Pump, Water	1
13	9013530	Seal, Tube, Water [Mit 2.0l]	2

Fig. 18 – DSR Coolant Group, LPG Engine

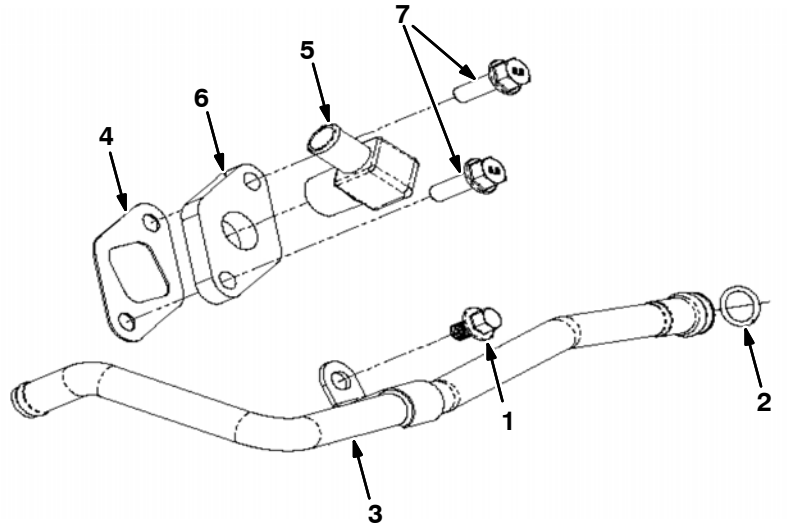

Ref.	Part No.	Description	Qty.
1	9010305	Bolt, M8–1.25 X 12 [Mit]	1
2	9010289	O–Ring [Mit 208 Buna–N]	1
3	9010306	Tube, Cooling, Line [Mit]	1
4	9010307	Gasket, Water Supply [Mit 2.0/2.4l]	1
5	9010308	Fitting, 1/2 Mpt X 5/8bh 90deg [Mit]	1
6	9010309	Plate, Water, Outlet [Mit Bypass]	1
7	9010310	Bolt, M8–1.25 X 25 Flg Hd [Mit]	2

Fig. 19 – Electrical Group

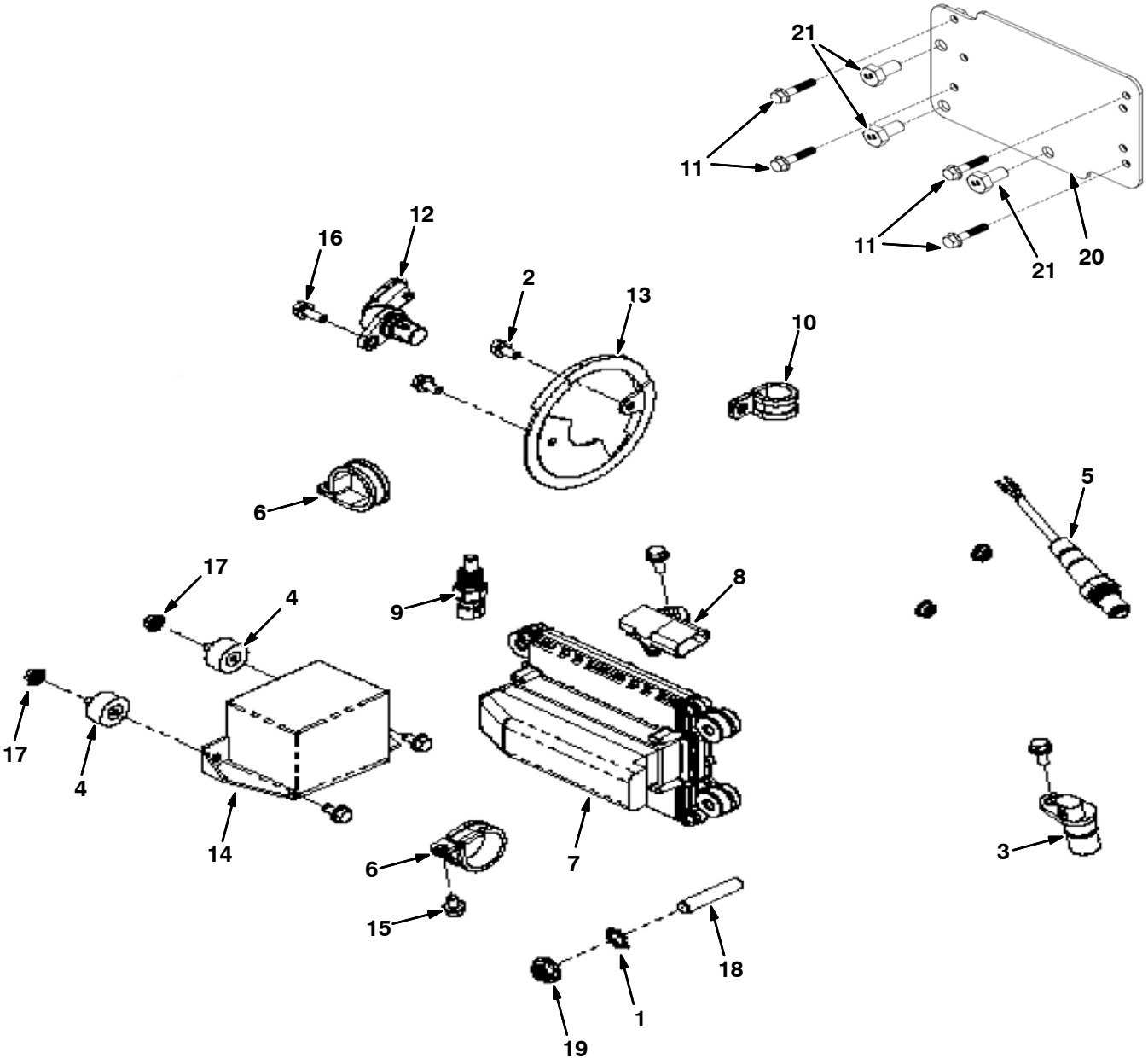

Fig. 19 – Electrical Group

Ref.	Part No.	Description	Qty.
1	9010255	Washer, Star, M10 [Mit]	1
2	9010256	Bolt, M6–1.0 X 12 Fl Hd Pl [Mit]	2
3	372492	Sensor, Spd, Timing Wheel [3.0l]	1
4	9008805	Isolator	2
5	1028558	Sensor, Exhaust, Tailpipe	1
6	9010257	Clamp, 1/4 Hole [Mit #20]	2
7	1071397	Module, Ecu, Gas [Mit 2.0l 2013]	1
7	1071398	Module, Ecu, Lpg [Mit 2.0l 2013]	1
8	372493	Sensor [Tmap]	1
9	372891	Sensor, Temp, Coolant	1
10	9010258	Clamp, 0.75d [Mit]	1
11	9010249	Bolt, M6–1.0 X 30 Fl Hd [Mit]	4
12	9010260	Sensor, Camshaft [Mit]	1
13	9010261	Cam, Sensor, Wheel [Mit 2.0/2.4l]	1
14	1071653	Harness, Wire, Eng, Gas [Mit, 2.0l]	1
14	1071654	Harness, Wire, Eng, Lpg [Mit, 2.Ol]	1
15	9010262	Bolt, M6–1.0 X 10 Fl Hd [Mit]	3
16	9010263	Bolt, M6–1.0 X 16 Fl Hd [Mit]	3
17	9010264	Nut, M6–1.0 Flange [Mit]	4
18	9010366	Stud, M10–1.25 X 50, Full Thrd [Mit]	1
19	9010367	Nut, M10–1.25, Hx Flg [Mit]	1
20	9010247	Plate, Mtg, Ecu [Mit 2.0/2.4l]	1
21	9010248	Bolt, M10–1.25 X 20 Hxhd [Mit]	3

Fig. 20 – Fuel Rail Group, Gasoline Engine

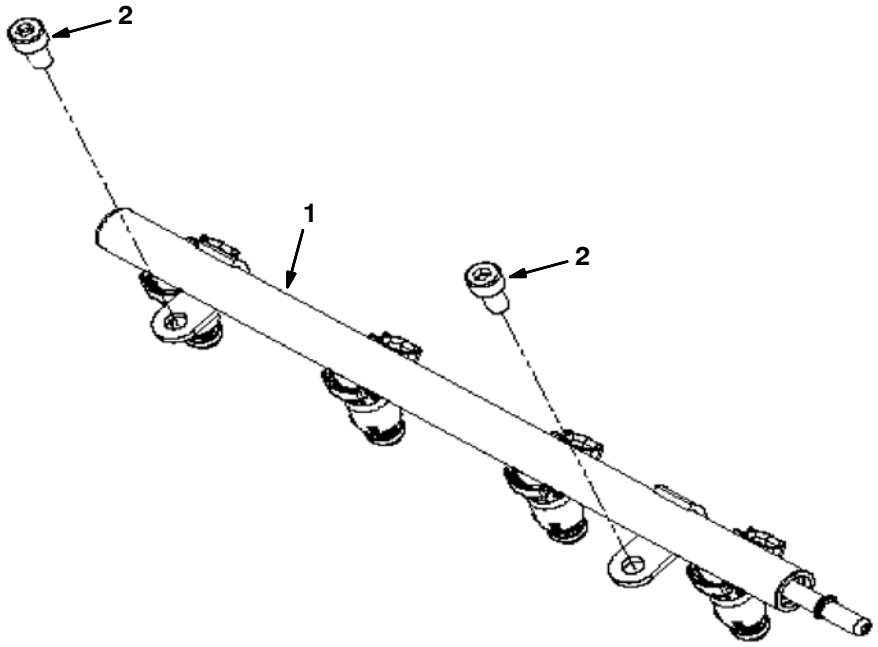

Ref.	Part No.	Description	Qty.
1	9010306	Tube, Cooling, Line [Mit]	1
2	9010327	Bolt, M8–1.25 X 16, Soc Hd [Mit]	2

Fig. 21 – Throttle Body Group, Gasoline Engine

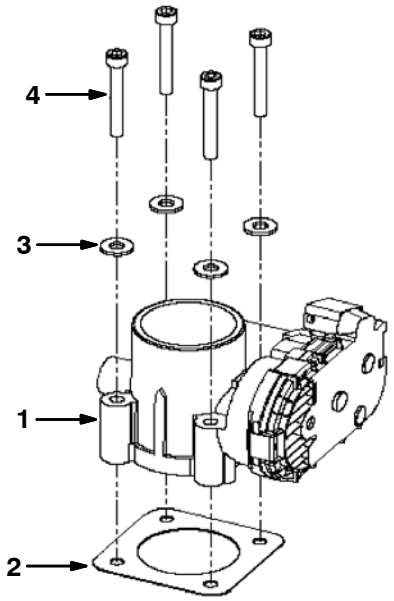

Ref.	Part No.	Description	Qty.
1	9010266	Actuator [Mit , Bosch]	1
2	9010268	Gasket, Throttle [Mit 40mm]	1
3	9010330	Washer, 1/4 Flat [Mit]	4
4	9010331	Bolt, M6–1.0 X 45, Skt Hd [Mit]	4

Fig. 22 – Throttle Body Group, LPG Engine

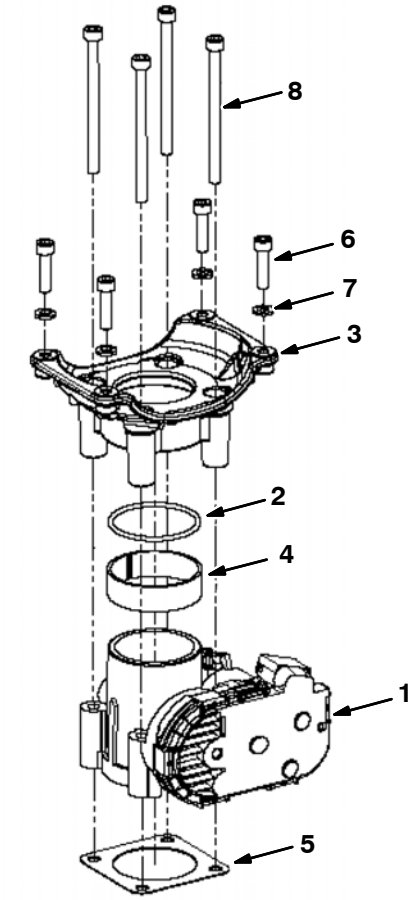

Ref.	Part No.	Description	Qty.
1	9010266	Actuator [Mit , Bosch]	1
2	1037311	Seal, Org, Lpg, Mixer	1
3	9006619	Adapter	1
4	9010267	Spacer, Ring, Throttle [Mit 40mm]	1
5	9010268	Gasket, Throttle [Mit 40mm]	1
6	9010269	Bolt, M6–1.0 X 25 Soc Hd [Mit]	4
7	9010270	Washer, Lock, M6 [Mit]	4
8	9010271	Bolt, M6–1.0 X 85 Soc Hd [Mit]	4

Fig. 23 – Vaporizer Group, LPG Engine

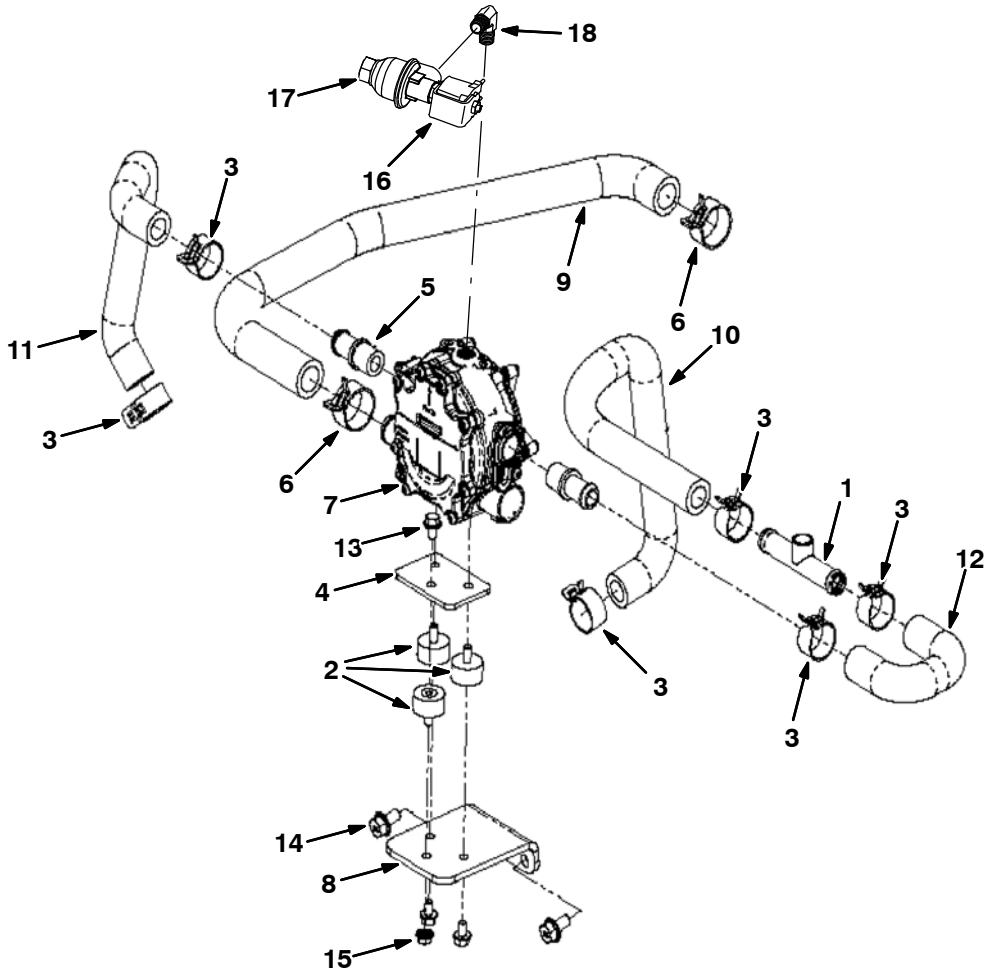

	Ref.	Part No.	Description	Qty.
	1	9010272	Hose Assy, Upper, Tap [Mit]	1
	2	9008805	Isolator	3
	3	384979	Clamp, Hose, Spring, 0.62d	6
	4	9008804	Plate, Mtg [Epr]	1
	5	9010273	Fitting, 1/2 X 5/8 Hose,Plastic[Mit]	2
	6	9010274	Clamp, Tension [Mit #29]	2
▽	7	9008193	Regulator	1
▲		9010626	Repair Kit, Vaporizer	1
	8	9010275	Bracket, Vaporizer [Mit 20/24m Tilt]	1
	9	9010276	Hose, Fuel, Molded [Mit 20/24m]	1
	10	9010277	Hose, Coolant, Molded [Mit 20/24m]	1
	11	9010278	Hose, Coolant, Molded [Mit 20/24m]	1
	12	9010279	Hose, Coolant, Molded [Mit 20/24m]	1
	13	9010262	Bolt, M6–1.0 X 10 Fl Hd [Mit]	3
	14	9010280	Bolt, M8–1.25 X 16 Fl Hd [Mit]	2
	15	9010264	Nut, M6–1.0 Flange [Mit]	1
▽	16	9006620	Lock–Off, 12v, Lpg [Mit]	1
▲	17	9007380	Filter Kit, Fuelock, Lpg	1
	18	9010317	Fitting, 1/4mpt X 1/4mpt, 90deg[Mit]	1

Fig. 24 – Electronic Pressure Regulator (EPR) Group, LPG Engine

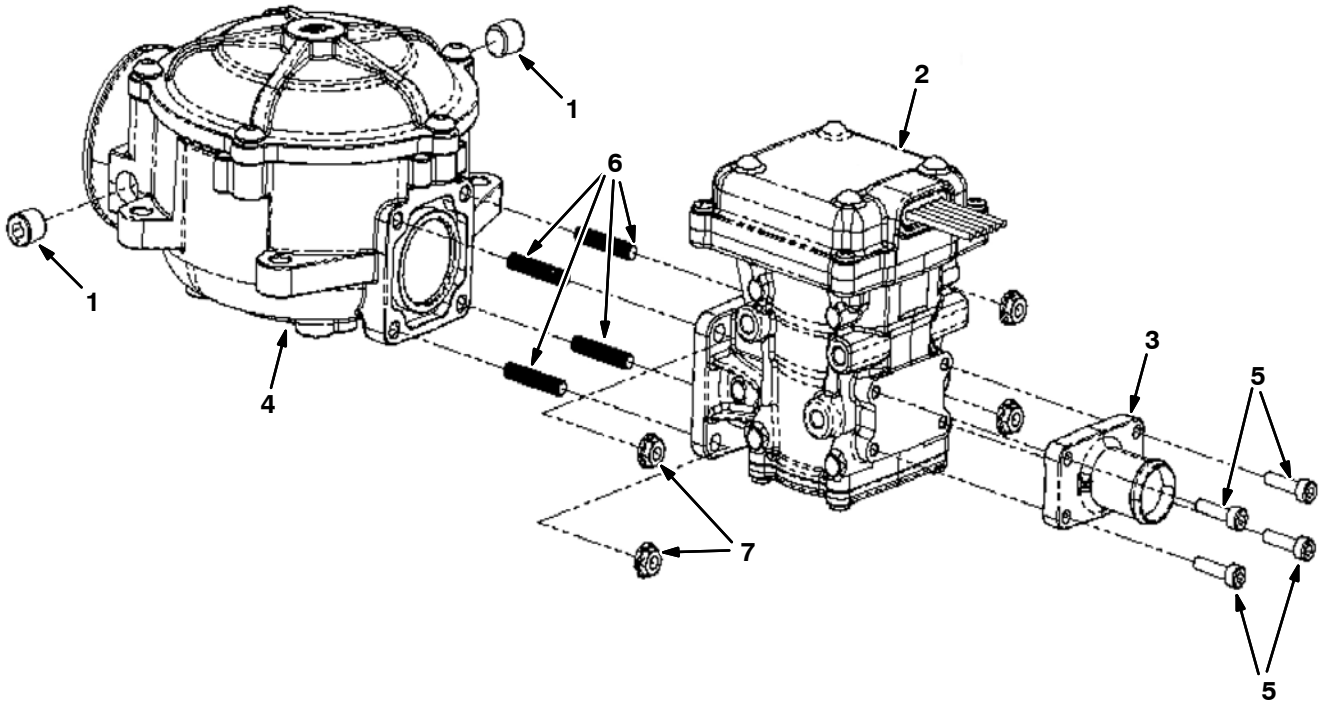

	Ref.	Part No.	Description	Qty.
	1	9010314	Plug, 1/8npt, Brs [Mit]	2
	2	9008806	Regulator, Press, Electronic [Epr]	1
	3	9008807	Fitting, Barb, 3/4” [Epr]	1
▽	4	9006618	Mixer , Lpg	1
▲		9010634	Repair Kit, Mixer	1
	5	9008808	Screw, Soc, M4 X 0.70 X 16	4
	6	9007424	Stud, M05–0.8	4
	7	9007423	Nut, Flng, M05–0.8	4

SECTION 7

CONTENTS **PAGE**

PART NUMBER TO PAGE NUMBER CROSS REFERENCE LIST 7-2
PART DESCRIPTION TO PAGE NUMBER CROSS REFERENCE LIST 7-17

PART NUMBER TO PAGE NUMBER CROSS REFERENCE LIST

Part Number	Page Number
IB3614	4-10
00500-15	4-8, 4-9
00927	2-113, 2-115
00954	2-147
00960	2-49, 2-75
00966	4-10
01316	3-3, 3-63
01493	2-9
01681	2-17
01683	2-25, 2-31, 2-99, 3-3, 3-19, 3-25, 3-29, 3-33, 3-43, 3-57, 3-63, 3-67
01684	2-5, 2-105, 2-109, 2-111, 2-119, 2-136, 2-141, 2-143, 3-29, 3-37, 3-57, 3-65
01685	2-51, 2-53, 2-55, 2-61, 2-77, 2-105, 2-109, 2-111, 2-119, 2-121, 2-123, 2-125, 2-129, 2-133, 2-139, 2-145, 2-149, 3-3, 3-7, 3-11
01686	2-7, 2-101, 2-121, 3-13
01714	2-95, 2-97
01754	2-105
01760	2-15
01762	2-113, 2-115, 3-7, 3-9
02430	4-26
02706	4-7
02850	2-15, 2-21, 2-56, 3-21, 3-69
02931	2-125
02938	2-107, 4-29
02942	2-101
03192	3-55
03495	2-123
03922	2-147
04375	2-75
04414	2-9, 2-23, 2-63, 2-65, 2-121, 2-123
04706	2-17
04733-12	2-117
06532	2-25, 2-27, 2-29, 2-35
06548	2-95
06549	2-15, 2-25, 2-31, 2-89, 3-37, 3-57, 3-63
06922	2-105
06927	2-21, 2-55
06928	2-107
06929	2-15
06938	2-25, 2-31
06939	3-63
06942	2-9, 2-19, 2-25, 2-27, 2-29, 2-31, 2-35, 2-37, 2-55, 2-87, 2-89, 2-95
06943	2-15, 2-23, 2-41, 2-45, 2-55, 2-77
06944	2-107
06946	2-27, 2-29, 2-35
06949	2-85
06955	2-95, 2-139, 2-145
06956	2-83, 2-85
06957	2-105, 2-121
06960	2-17
06961	2-49, 2-53
06962	2-59, 2-79, 3-67
06963	2-105
06965	3-67
06968	2-63, 2-65
06969	2-93, 2-117
06972	2-23, 2-63, 2-65
06988	2-19
07255	2-25, 2-27, 2-29
07259	2-101, 2-109, 2-111, 2-117, 2-125
07299	2-63, 2-65
07449	2-125
07514	3-19
07782	2-19
07786	2-129, 2-133
07788	2-129, 2-133, 2-149
07789	2-101
07790	2-59, 2-75, 2-79
07791	2-37, 2-39, 2-127, 2-131, 2-171
07797	2-177
07805	2-119, 3-37
07810	2-109
08085	2-15
08165	2-59, 2-77
08166	2-51, 2-53, 2-77
08170	2-95
08171	2-93, 2-107
08175	2-113, 2-115
08179	2-95, 2-101, 2-109, 2-111, 2-121, 3-7, 3-11
08180	2-91
08182	2-97, 2-129, 2-133
08236	2-117
08708	2-9, 2-15, 2-17, 2-19, 2-25, 2-31, 2-41, 2-43, 2-45, 2-47, 2-55, 2-59, 2-71, 2-73, 2-79, 2-85, 2-89, 2-95, 3-69
08709	2-7, 2-9, 2-21, 2-41, 2-43, 2-45, 2-47, 2-49, 2-55, 2-61, 2-71, 2-73, 2-75, 2-79, 2-81, 2-83, 2-85, 2-87, 2-89, 2-95, 2-99, 2-129, 2-133, 2-175, 3-15, 3-69
08711	2-23, 2-63, 2-65, 2-93
08712	2-13, 2-51, 2-105, 2-109, 2-111, 2-119, 2-121, 2-141, 2-143, 3-57, 3-65
08713	2-51, 2-53, 2-55, 2-61, 2-77, 2-99, 2-103, 2-105, 2-109, 2-111, 2-113, 2-115, 2-117, 2-119, 2-121, 2-123, 2-125, 2-127, 2-131, 2-135, 2-139, 2-145, 2-149, 3-7, 3-13, 3-15
08714	2-103, 2-111, 2-121, 2-125
08716	2-51, 2-53, 2-77, 2-109, 2-111, 2-129, 2-133, 2-141, 2-143
08875	2-135, 2-136
09005	2-113, 2-115
09007	2-129, 2-133, 2-143
09010	2-61, 2-99, 2-103, 2-109, 2-111, 2-113, 2-115, 2-119, 2-121, 2-135, 2-149, 3-7, 3-11, 3-15
09011	2-149
09023	2-121, 2-149
09028	2-101, 2-107, 2-117, 2-129, 2-133
09037	2-35
09081	2-127, 2-131
09145	2-49
09198	2-99
09200	2-15, 2-21, 2-87, 2-105, 2-141, 3-19, 3-25, 3-29, 3-33, 3-65
09206	3-21, 3-37
09252	2-15, 2-99, 2-101, 3-37, 3-57
09291	2-105, 2-109, 2-111
09738	3-13, 3-67
09739	2-113, 2-115, 2-141, 3-13, 3-19, 3-25, 3-33, 3-43, 3-47, 3-49, 3-51, 3-52, 3-53, 3-65
09740	2-9, 2-15, 2-21, 2-55, 2-61, 2-87, 2-105, 2-113, 2-115, 2-117, 2-119, 2-129, 2-133, 2-135, 2-139, 2-143, 2-145, 2-147, 2-149, 2-175, 2-177, 3-3, 3-5, 3-21, 3-29, 3-37, 3-47, 3-49, 3-51, 3-63
09741	2-117, 2-121
09744	2-136, 3-37, 3-65
09832	2-55, 2-59, 2-79
1002789	3-23, 3-25

Part Number	Page Number
1002898	3-21, 3-29
1002899	3-21, 3-29
1005086	3-23, 3-25
1005219	3-39
1005255	3-21
1005302	3-19, 3-29, 3-39
1005435	3-21, 3-29, 4-29
1005506	3-19
1005507	3-19
1005508	3-19
1005552	3-19, 3-23, 3-25, 3-29, 3-39
1006400	3-29
1006401	3-19, 3-33
1006415	3-21, 3-39
1006416	3-29
1006447	3-19
1007482	2-55, 2-61, 2-81
1008640	2-49
1008916	2-19
1010614	3-43
1010668	3-25, 3-29, 3-33, 3-43
1010684	3-19
1010836	3-19
1011018	2-238
1011019	2-238
1011020	2-238
1011107	2-83
1011216	2-51, 2-53, 2-77
1011353	2-23
1011403	3-29, 3-39
1011412	3-19, 3-25, 3-31, 3-33, 3-43
1011521	3-23
1011780	2-41, 2-43, 2-45, 2-47
1011799	2-55
1011837	3-39, 3-41
1011885	3-5
1011895	2-83, 2-85
1011899	2-41, 2-43, 2-45, 2-47
1012160	2-83
1012248	2-85
1013031	2-51, 2-53, 2-77
1013086	2-83, 2-85
1013117	2-53, 2-77
10137	1-1, 2-89
1013902	3-21
1014082	3-21
1014563	2-49, 2-55, 2-59, 2-79, 2-105, 2-109, 2-111, 2-125, 2-147, 2-151, 3-55
1014575	3-21
1014705	2-117
1014747	2-61
1014843	2-81
1014929	3-29
1014971	4-29
1014974	3-5, 3-43, 4-29
1014986	3-29
1015026	3-33, 3-43
1015032	2-141, 3-13, 3-31, 3-41
1015033	2-141, 3-5
1015041	2-55, 2-61
1015045	2-141, 3-3, 3-13, 3-31, 3-41, 3-63
1015048	3-5
1015067	3-25, 3-33
1015205	2-79
1015220	2-105
1015486	3-31, 3-33, 3-41, 3-43, 3-63
1015547	2-25, 2-27, 2-29, 2-39
1015815	2-69
1015897	2-29
1015930	2-25, 2-27, 2-32, 2-37
1016354	4-29
1016463	2-109
1016560	2-29
1016561	2-39
1016624	2-51
1016837	3-3
1017022	3-21, 3-29
1017101	2-136
1017141	2-241
1017218	2-9, 2-15, 2-21, 2-75, 2-103, 2-109, 2-111, 2-135, 2-139, 2-143, 2-145, 2-147, 2-149, 2-175, 2-177, 3-5, 3-21, 3-29, 3-37, 3-47, 3-49, 3-51, 3-63
1017248	3-49, 3-52
1017250	3-51, 3-53
1017368	2-5
1017386	3-39
1017413	3-39
1017415	3-39
1017791	2-7
1017868	1-1, 2-123
1017903	2-91
1017944	2-105
1017947	2-87
1017969	2-51
1017978	2-41
1017987	2-45
1018097	3-21
1018098	3-19, 3-29
1018142	2-51
1018155	4-29
1018193	2-109
1018194	2-109
1018196	2-109
1018197	2-109
1018199	2-109
1018202	2-109
1018203	2-105
1018207	2-105
1018208	2-107
1018209	2-151
1018210	2-109
1018216	2-151
1018226	2-101
1018227	2-101
1018236	2-109, 2-111
1018237	2-109, 2-111
1018239	2-103
1018240	2-107
1018241	2-101
1018244	2-109
1018245	2-109, 2-111
1018252	2-151
1018253	2-109, 2-111
1018260	2-101
1018262	2-101
1018266	2-101
1018272	2-103
1018274	2-107
1018275	2-101
1018276	2-101
1018280	2-107
1018293	2-107
1018300	2-103
1018333	3-25
1018463	2-55
1018495	3-63
1018499	3-19, 3-63
1018549	2-229
1018776	2-15
1018780	3-21
1018883	3-19
1018884	3-19
1018936	2-175, 4-11
1018938	3-15, 4-13
1018939	2-25, 2-31
1019031	2-129
1019146	2-117
1019225	2-7
1019228	2-15
1019250	3-63
1019251	2-7
1019265	2-55, 2-61
1019273	2-55
1019295	1-1, 2-127, 2-131
1019394	2-83
1019416	2-83
1019424	2-139, 2-145
1019445	3-47, 3-49, 3-51
1019630	2-233
1019636	3-5
1019646	3-27
1019647	3-52, 3-53
1019939	2-83
1019940	2-83
1019950	2-235
1019968	2-55, 2-59, 2-79
1019971	3-47, 3-49, 3-51
1020002	2-117
1020003	2-117

Part Number	Page Number
1020163	2-119
1020166	1-1, 2-119
1020168	2-9, 3-37
1020186	2-21
1020207	2-119
1020208	2-119
1020209	2-135
1020234	3-69
1020320	2-147
1020331	2-143
1020335	2-143
1020394	2-175, 4-19
1020428	2-136
1020434	2-241
1020487	2-15
1020526	3-65
1020540	2-9
1020548	2-129
1020602	2-51
1020708	2-175
1020828	2-119
1020904	2-9
1020949	2-41, 2-43, 2-45, 2-47, 2-71, 2-73
1021019	2-113, 2-115
1021047	2-107
1021090	2-143
1021210	3-5, 4-3
1021265	2-17
1021290	2-89
1021325	3-3
1021327	2-7
1021404	2-125
1021419	2-143
1021439	3-11
1021473	3-11
1021497	2-125
1021511	2-123
1021514	2-41, 2-45
1021546	2-125
1021564	3-11
1021579	1-1, 2-173
1021609	2-121
1021617	3-11
1021789	2-51
1021794	3-7
1021834	2-9
1021879	2-143
1021881	3-63
1021920	2-143
1021991	2-175
1022003	2-119
1022004	2-21
1022005	2-15, 2-21
1022007	1-1, 2-119
1022009	1-1, 2-119
1022031	2-95
1022069	2-19
1022105	2-15
1022106	3-13
1022111	3-7
1022113	2-51
1022135	3-7
1022137	2-139, 2-145
1022140	2-99
1022165	2-119
1022167	2-143
1022176	2-135
1022179	2-119
1022182	2-136
1022188	3-7
1022229	3-5
1022243	2-95
1022260	3-7
1022276	3-55
1022302	3-7
1022318	3-13
1022345	2-97
1022359	2-119
1022363	2-119
1022364	2-25, 2-27
1022370	2-143
1022372	2-121
1022377	2-147
1022442	2-121
1022482	2-175
1022484	2-175
1022545	2-125
1022699	2-9
1022736	2-95
1022779	2-99
1022787	2-99
1022794	2-51
1022798	2-99
1022825	2-129, 2-133
1022831	2-123
1022846	2-127, 2-131
1022978	2-133
1023239	2-123
1023288	2-23
1023306	2-129
1023307	2-133
1023314	2-133
1023464	2-11
1023476	2-125
1023482	2-83, 2-85
1023485	3-17
1023486	3-17
1023487	2-161
1023488	2-159
1023499	2-15
1023502	2-139, 2-145
1023545	2-173
1023569	2-11
1023606	2-161, 2-163
1023607	2-161, 2-163
1023608	2-159
1023609	2-159
1023611	2-161, 2-163
1023617	2-113
1023754	2-147, 2-149
1023769	2-165
1023779	2-121
1023853	2-55, 2-61
1023879	3-55
1023926	2-17
1024141	2-230
1024157	2-17
1024237	3-29
1024249	2-91
1024251	2-169, 4-7
1024260	2-17, 4-25
1024274	2-89
1024287	2-13
1024389	2-135
1024403	2-143
1024425	2-15
1024464	2-15
1024478	2-17
1024500	2-21
1024535	2-139, 2-145
1024558	2-139, 2-145
1024570	2-119
1024576	2-129, 2-133
1024584	2-127, 2-131
1024586	1-1, 2-127, 2-131
1024591	2-135
1024599	2-139, 2-145
1024641	2-121
1024648	2-121
1024651	2-127, 2-131
1024688	2-165, 2-167
1024695	2-17
1024703	2-121
1024764	2-165
1024853	2-147
1024891	2-147
1024934	2-87
1024977	3-67
1025005	1-2, 3-7
1025100	2-117
1025101	2-241
1025132	2-173
1025140	2-97
1025151	2-127, 2-131
1025159	3-5
1025196	2-21
1025229	2-83, 2-85
1025405	3-15
1025435	2-9
1025445	3-17
1025460	2-125
1025480	2-139, 2-145
1025487	2-95
1025495	2-95
1025544	2-165
1025547	2-161
1025548	2-165
1025551	2-167
1025601	2-125

Part Number	Page Number
1025619	2-143
1025620	2-143
1025663	3-67
1025680	2-121
1025736	2-15
1025756	2-151
1025806	2-21
1025841	2-151
1025872	2-147
1025887	2-147
1025888	2-147
1025904	2-101
1025916	2-15
1025990	3-17
1025991	3-17
1025992	3-17
1026003	2-55
1026007	2-121
1026014	2-143
1026025	2-95
1026051	2-139, 2-145
1026067	3-21
1026074	3-19
1026080	2-113, 2-115
1026108	2-119
1026119	3-15
1026146	3-59
1026222	2-3
1026223	2-3
1026319	2-171
1026352	2-113, 2-115
1026550	2-83, 2-85
1026576	2-89
1026628	2-21
1026645	2-161, 2-163
1026647	2-171
1026664	2-83
1026665	2-21
1026726	2-21
1026727	2-139
1026733	2-165
1026743	3-63, 4-27
1026759	2-83, 2-85
1026825	2-15
1027007	3-63
1027039	2-145
1027099	2-55
1027103	2-55
1027218	2-9
1027228	2-89
1027233	2-99
1027237	3-63
1027267	2-9
1027290	1-1, 2-136
1027313	2-99
1027320	2-165
1027321	2-165
1027381	2-135
1027560	3-67
1027688	2-5
1027697	2-3
1027716	1-2, 3-7
1027719	1-1, 2-123
1027759	3-71
1027798	3-49, 3-51, 3-52, 3-53
1027800	3-49, 3-51, 3-52, 3-53
1027810	2-117
1027856	2-41, 2-43, 2-45, 2-47
1027916	2-7
1027926	3-11
1027976	3-63
1027978	3-63
1028074	2-141
1028136	2-53
1028145	2-161, 2-163
1028173	2-143
1028211	2-143
1028328	2-143
1028343	2-37
1028374	2-123
1028412	2-21
1028516	2-21
1028522	2-143
1028558	2-53, 2-77, 6-25
1028559	2-53
1028582	3-19
1028635	2-129, 2-133
1028690	2-139, 2-145
1028691	2-139, 2-145
1028697	3-5
1028701	2-139, 2-145
1028711	2-27
1028722	2-35
1028753	2-53, 2-77
1028769	2-13
1028772	2-13
1028821	2-171
1028822	2-171
1028823	2-171
1028852	2-119
1028924	2-85
1028929	2-53, 2-77
1028972	2-131
1028979	2-131
1028994	2-53, 2-77
1029055	3-63
1029057	3-37, 3-63
1029082	2-27, 2-29, 2-35
1029118	3-21
1029128	2-127
1029132	2-127
1029153	3-63
1029155	3-63
1029156	3-63
1029185	2-141
1029293	2-85
1029295	2-85
1029362	2-13
1029379	3-7, 3-9, 4-9
1029399	3-63
1029543	3-67
1029545	2-19
1029646	2-101
1029652	2-19
1029748	2-136
1029790	3-63
1029964	2-113, 2-115
1030017	2-9
1030073	2-23
1030404	2-159
1030441	4-32
1030444	4-32
1030511	3-25, 3-33, 3-43
1030549	3-59
1030588	2-15, 2-21
1030593	2-9
1030617	2-136
1030709	2-167
1030863	3-19
1030864	3-19
1030878	3-19
1030910	2-117
1030911	2-117
1030969	2-3
1031011	1-1, 2-127, 2-131
1031017	2-241
1031206	2-15
1031233	2-135
1031235	2-136
1031309	2-145
1031312	2-27, 2-29, 2-35
1031331	1-1, 2-123
1031439	2-23
1031553	2-47
1031557	2-19
1031566	2-75, 3-69
1031572	3-5
1031575	2-107
1031609	2-43
1031610	2-143
1031614	2-43, 2-47
1031665	2-9, 2-13, 2-15, 2-17, 2-21
1031699	2-143, 4-3
1031796	4-27
1031797	4-27
1031798	4-27
1031799	4-27
1031800	4-27
1031801	4-27
1031802	4-27
1031803	4-27
1031823	1-1, 2-127, 2-131
1031826	2-7
1031827	2-7
1031945	1-1, 2-123
1032242	2-49
1032323	2-43, 2-47
1032399	2-99
1032450	2-241

Part Number	Page Number
1032578	3-71
1032743	2-113, 2-115
1032812	2-85
1032830	3-55
1032831	3-55
1032869	3-65
1032896	3-65
1033156	2-21
1033297	3-21
1033428	2-49
1033591	2-105
1033624	2-233
1033644	1-1, 2-49
1033746	2-85
1033897	2-85
1033901	2-85
1033975	2-9
1034147	2-125
1034149	2-125
1034270	2-91
1034388	2-151
1034655	2-85
1034676	2-85
1034764	2-11
1034765	2-11
1034766	2-11
1034767	2-15
1034768	2-11
1034769	2-11
1034770	2-11
1034878	2-173
1035031	2-49
1035044	2-143
1035068	2-19
1035214	2-61
1035222	2-55
1035530	2-49
1035727	2-125
1035771	2-49
1035794	3-29
1035832	2-9
1035976	2-56
1035997	2-9
1036240	2-107
1036611	2-105
1036801	3-29
1036892	2-13, 2-43, 2-47, 2-59, 2-71, 2-73, 2-79, 3-69
1036939	2-165
1036944	3-17
1036945	2-161, 2-163
1036946	3-17
1036959	2-171
1036965	3-17
1036997	2-141
1037011	3-15
1037032	4-29
1037042	2-167
1037053	2-167
1037235	2-105
1037311	6-28
1037346	2-7, 2-59, 2-79, 2-89, 2-107, 2-143, 2-151, 3-69
1037354	2-173, 3-69
1037355	2-59, 2-79, 3-69
1037671	2-105
1037805	3-15, 4-15
1037809	3-35
1037816	2-143
1037825	3-25, 3-33, 3-43
1037947	2-105
1037970	2-19
1037971	2-19
1038074	2-141
1038115	2-109, 2-111, 3-11
1038123	2-111
1038134	2-111
1038137	2-117, 2-121, 2-129, 2-133, 3-11
1038159	4-29
1038258	2-113, 2-115
1038499	2-55
1038566	2-177, 4-21
1038569	2-159
1038805	2-135, 2-136
1038927	2-143
1038941	2-143
1039019	3-5
1039049	2-143
1039064	2-141
1039072	2-143
1039124	2-111
1039148	2-159
1039149	2-111
1039155	2-111
1039157	2-111
1039163	2-103
1039215	2-103
1039348	2-129, 2-133
1039357	3-29
1039396	2-119
1039521	2-83
1039652	2-143
1039757	2-135, 2-136
1039789	2-177
1040018	2-119
1040117	2-177
1040216	2-161
1040306	2-135
1040318	2-171, 2-173
1040467	2-17, 2-19, 2-56, 2-59, 2-79, 2-101, 3-37, 3-57
1040524	2-3
1040628	2-165
1040634	3-65
1040655	2-161, 2-163
1040800	3-65
1040834	3-13
1040841	2-11
1040863	3-67
1040871	3-67
1040876	2-177
1041006	2-105
1041151	2-37, 2-39
1041152	2-37, 2-39
1041291	2-56
1041389	3-17
1041391	2-165
1041822	2-13
1041920	2-105
1041953	2-139, 2-145
1041984	2-105
1042003	2-139
1042010	2-145
1042028	2-23
1042499	2-5
1042500	2-5
1042504	2-5
1042686	2-117
1042710	4-32
1042772	2-29, 2-39
1042775	2-165
1042776	2-165
1042968	3-7, 3-9
1043322	2-61
1043481	2-27, 2-37
1043897	2-59
1044323	2-103
1044342	3-29
1044343	3-29
1044367	2-177
1044393	3-37
1044993	2-109, 2-111
1045272	3-15
1045316	2-56
1045415	2-59
1045419	2-59
1045433	2-59
1045444	3-67
1045447	2-59
1045530	2-59
1045759	2-167
1045764	2-55, 2-59, 2-79
1045940	2-59, 2-79
1046022	2-23
1046039	2-59
1046173	3-37
1046237	2-49
1046798	2-143
1046962	2-59, 2-79
1046976	3-9
1046980	1-2, 3-9
1046995	3-9
1047002	3-9
1047060	3-9
1047098	2-135, 2-136
1047169	2-9
1047238	1-2, 3-9
1047295	2-9

Part Number	Page Number
1048166	2-79, 3-69
1048295AM	1-1, 2-105
1048474	2-135, 2-136
1048512	2-135, 2-136
1048955	2-15
1049242	2-105
1049254	3-29, 3-39
1049259	3-29
1049919	2-19
1050003	2-241
1050295	3-55
1050436	2-161, 2-163
1050437	2-161
1051534	3-69
1052017	3-39
1052124	2-117
1052170	2-59
1052336	3-39, 4-29
1052342	2-117
1052726	3-37
1052885	2-107
1053078	3-37
1053320	2-105
1053464	4-29
1053838	2-7, 2-107, 3-13
1054382	2-61, 2-81
1054428	2-79, 3-69
1054558	2-47
1054575	2-113, 2-115
1054610	2-115
1054682	2-113
1054776	4-29
1054857	2-113, 2-115
1055106	2-23
1055139	2-115
1055170	2-35
1055377	2-49, 2-75, 3-69
1055381	2-49
1055425	2-49
1055552	2-67
1056195	3-67
1056232	2-29
1056233	2-35
1056241	2-53
1056298	2-105
1056300	2-39
1056355	2-43, 2-47
1056566	2-23
1057029	5-11
1057637	4-29
1057643	2-113, 2-115
1057707	1-2
1057708	1-2
1057710	1-2
1057711	1-2
1058753	3-69
1058777	3-69
1058935	3-39
1058963	3-37
1058996	2-17
1059091	1-2, 3-9
1059092	1-2, 3-9
1059100	2-149
1059234	4-32
1059343	2-91
1059347	2-93
1059372	3-39
1059391	3-39
1059542	2-105
1059640	2-3
1059671	2-93
1059677	3-37
1059878	4-32
1060130	2-7, 3-13
1060185	3-37
1060273	3-37
1060291	3-37
1060292	3-37
1060517	4-29
1060521	2-91
1060596	3-39
1060624	3-37
1060693	3-39
1060695	4-29
1060716	2-149
1060719	3-37
1060871	3-46
1060880	3-46
1060881	3-46
1060942	2-7
1061045	3-43
1061973	2-91
1061974	2-93
1062033	2-149
1062116	2-29, 2-39, 3-13
1062403	3-39
1062566	2-7, 2-107
1062804	3-37
1062813	2-241
10632-1	2-107
10632-12	3-57
10632-13	2-107
10632-17	3-52, 3-53
10632-19	3-19, 3-29, 3-39
10632-2	3-5
10632-4	2-107, 3-37
1063456	2-238
1063457	2-238
1064183	3-37
1064191	3-37
1064370	2-235
1064371	2-233
1064440	2-241
1064443	3-69
1064662	2-241
1065342	2-241
1065343	2-241
1066893	2-15
1067700	2-141
1068611	2-149
1068613	2-149
1068644	2-149
1068811	2-113, 2-115
1068812	3-9
1069019	1-2
1069020	1-2
1069241	3-55
1069253	3-55
1069562	2-117
1069580	3-57
1069933	2-101
1070348	2-65
1070402	3-57
1070426	2-75
1070431	2-75
1070434	2-79
1070619	2-75
1070659	3-57
1070732	2-81
1070751	2-63, 2-65
1070756	2-63, 2-65
1070764	2-75
1070787	2-73
1070788	2-71, 2-73
1070798	2-99
1070819	2-99
1070822	2-71, 2-73
1070833	2-71, 2-73
1070860	2-79
1070890	2-75
1070955	2-79
1071033	3-69
1071041	3-69
1071047	3-69
1071061	2-91
1071062	3-57
1071099	2-81
1071107	2-75
1071108	2-75
1071110	2-75
1071113	2-77
1071144	2-75
1071145	2-75
1071155	2-63
1071173	2-171
1071240	2-151
1071253	2-149
1071280	3-39
1071376	2-77
1071388	2-85
1071397	6-25
1071398	6-25
1071404	2-71
1071418	2-77
1071439	2-21
1071440	2-67, 2-69
1071481	2-89
1071482	2-89
1071502	2-67
1071603	2-229

Part Number	Page Number
1071616	2-9
1071641	3-58
1071642	2-239
1071653	2-238, 6-25
1071654	2-238, 6-25
1071727	2-75
1071785	2-79
1071947	3-46
1072408	2-67, 2-69
1072421	2-75
1072456	2-15, 4-31
1072505	3-69
1072559	2-67, 2-69
1072669	2-63, 2-65
1072815	2-15
1072877	3-5
1072885	2-143
1072995	2-177, 4-23
1072997	3-15, 4-17
1073487	2-91
1073529	2-75
1074010	2-151
1074807	2-113, 2-115
1075003	2-13
10832	2-23
10917	4-27
11442-1	2-37, 2-39
11442-23	2-87
11842	2-99
11984	3-21
1210807	2-7
1220185	2-5
1220235	2-5
1220236	2-5
1221543	2-5
12295	2-113, 2-115
12309	2-107
12317	2-7, 2-109, 2-111, 2-121, 3-13
12323	2-107, 3-37
13048	2-39
13534	2-113, 2-115
13698	2-171
13904	4-11, 4-13, 4-15, 4-17, 4-19, 4-21, 4-23
13907	4-7, 4-19
140916	3-57
14432	2-41, 2-43, 2-45, 2-47, 2-71, 2-73
14595-1	2-95
14605	2-95
14838	2-5
14877	3-3, 3-5, 3-19, 3-29, 3-39
150100	3-19
150516	2-27, 2-37
150525	3-21
150538	3-29
150540	3-29, 4-29
150709	2-87, 3-29
150713	3-29
15331	2-19
15539	2-5
15543-2	2-41, 2-45
15648	2-139, 2-145
15675	2-113, 2-115, 2-139, 2-145
15678	2-105, 3-29
16213	2-99
16411	1-2
16412	1-2
16431	2-161, 2-163
16695	4-8, 4-9
16735	2-49, 2-75, 2-143, 3-11
16931	2-9, 2-15, 2-19, 2-21, 2-41, 2-45, 2-49, 2-59, 2-61, 2-75, 2-81, 2-83, 2-85, 2-87, 2-91, 2-95, 2-147
16944	2-101
16968	2-13
17185	2-113, 2-115, 3-19
17284	3-13
17414	2-87
17461	2-109, 2-111, 2-117, 2-129, 2-133, 3-11
17521	2-141
17980	2-17, 2-171
19064	2-55, 2-105, 3-61
19065	2-15, 3-37
19066	2-15, 2-21, 2-49, 2-89, 2-101, 3-37, 3-47, 3-49, 3-51, 3-52, 3-53, 3-63
19191	3-7, 3-9
19312	2-27, 2-29, 2-35, 2-67, 2-69
19313	2-49, 3-55
19315	2-23, 2-27, 2-29, 2-35, 2-67, 2-69
19317	2-27, 2-29, 2-35
19583	2-91
19760	2-87
20021	2-107
20170	2-95
20394	2-19, 3-63
20634	2-105
20778	2-89
20833	1-1, 2-125
20944	3-5
20951	3-5, 4-29
20952	3-5
21168	2-21
21195	2-49
21196	3-67
21197	2-83, 2-99
21198	2-169, 3-59
21601	2-123, 3-9
21602	2-123
21603	2-123, 3-9
21606	2-123
21623	2-107
21657	4-26
21659	4-26
21851	2-15
21933	4-25
21934	4-25
21935	4-25
21955	4-9
21956	4-9
21958	4-9
222267	2-21, 2-135, 2-136
222268	2-103, 2-109, 2-111
222290	2-89
222375	3-43
222463	2-127, 2-131
222496	2-51, 2-53, 2-77, 2-113, 2-115
222505	2-51, 2-53, 2-77, 2-125
222516	2-139, 2-145
22290	2-17
22297	2-55, 2-61, 2-81
22308-6	2-87
223080	2-15
223198	2-117, 3-37
223470	2-117, 3-7
223599	2-13
22615	3-9
22790	4-3
23146	2-7, 2-107, 3-13
23156	2-87
23211	2-101
23285	4-3
23498	2-139, 2-145, 2-147, 2-151
23524-1	2-121
23788	2-95
24012	2-51, 2-53
24047	2-87
24105	3-3
24196	3-43, 3-47, 3-49, 3-51, 3-52, 3-53
24199	3-57
24265	2-21, 3-3
24299	2-5
24339	2-91
24358	2-143, 4-3
24543	3-5
24544	3-3, 3-19, 3-29, 3-39
24555	2-123, 2-125, 3-9
24698	3-39
24928-1	2-87
24976	2-23
25014	2-53, 2-77
25046	3-7, 3-9
25122	1-1, 2-173
25312	3-70
25611	3-7, 3-9
25686	2-113, 2-115

Part Number	Page Number
25735	2-125, 2-127, 2-131
26496	2-87
27048	2-37, 2-83, 2-87
27767	2-29, 2-39
28854	4-9
29557	3-11
29558	3-11
29584	2-121
30407	2-55, 2-59, 2-79
31241	2-151
31354	4-8, 4-9
31375	4-8
31379	4-8
31383	4-8
31525	2-49
31543	3-33, 3-43
31613	1-1, 2-173
32126	2-91
32183	2-107, 3-5
32483	2-15, 2-17, 2-25, 2-27, 2-29, 2-31, 2-35, 2-41, 2-45, 2-51, 2-53, 2-55, 2-59, 2-77, 2-83, 2-85, 2-87, 2-105, 2-107, 2-151, 3-37, 3-69
32485	2-23, 2-49, 2-53, 2-63, 2-65, 2-99, 2-117, 2-125, 2-151, 2-169
32486	2-17, 2-23, 2-55, 2-63, 2-65, 2-93, 2-107, 3-11
32490	2-9, 2-23, 2-27, 2-29, 2-35, 2-37, 2-55, 2-59, 2-67, 2-69, 2-77, 2-79, 2-89, 2-95, 2-97, 2-99, 3-19, 3-21
32491	2-7, 2-9, 2-15, 2-17, 2-19, 2-41, 2-43, 2-45, 2-47, 2-49, 2-53, 2-55, 2-59, 2-61, 2-71, 2-73, 2-75, 2-79, 2-81, 2-83, 2-85, 2-87, 2-91, 2-95, 2-113, 2-115, 2-117, 2-119, 2-139, 2-143, 2-145, 2-171, 2-175, 3-11, 3-13, 3-15, 3-55, 3-65, 3-69
32492	2-7, 2-15, 2-53, 2-59, 2-77, 2-79, 2-83, 2-87, 2-99, 2-107, 2-171, 3-7, 3-9, 3-55, 3-59, 3-67
32493	2-23, 2-63, 2-65
32509	4-29
32716	2-49, 2-87
32746	2-5
32975	2-105
32981	2-83, 2-85, 2-147, 2-151
32982	3-37
32983	2-15, 2-49
32987	2-91
32988	2-49
331380	3-71
331381	3-71
331382	3-71
331383	3-71
331385	3-71
33295	3-3
33373	2-125
33401	2-119
33580	4-5
33671	2-89
33812	2-177
33932	2-21, 2-99, 2-127, 2-131, 3-3, 3-37
34178	4-5
34323	2-151
34359	3-15
34411	2-7, 2-107, 3-13
35493	4-10
35707	2-87
35710	2-87
35904	2-171
360023	2-93
360074	2-93
360270	2-93
360271	2-93
360272	2-93
360273	2-93
360274	2-93
360275	2-93
360276	2-93
360801	2-129, 2-133, 2-143
360802	2-93
360824	2-105, 3-65
360952	2-105
360973	2-136
361044	2-161
361047	3-17
361071	2-13
361073	2-13
361075	2-13
361339	2-59, 2-95, 2-97, 2-107, 2-119, 3-3, 3-19, 3-21, 3-69
36159	2-67, 2-69
363162	2-123
36328	2-129, 2-133, 2-149
363301	2-123
363458	2-7
363543	2-141
363976	2-9, 2-49
364347	2-95
364441	2-123, 3-15
364587	2-101
364749	2-15
364864	2-95
364948	2-95
364978	2-165
365004	3-17
365095	2-141
365164	2-41, 2-45, 2-141
36643	2-87, 2-99, 2-147, 2-151
36644	2-117
36658	2-105
36661	2-105
367313	2-111, 2-121
367770	2-121
367771	2-7
367949	2-135, 2-136
367974	3-59
368391	2-15
36845	3-11
369359	3-7, 3-9, 3-67
369704	2-89
369745	2-41, 2-43, 2-45, 2-47, 2-71, 2-73
369746	1-1, 2-41, 2-43, 2-45, 2-47, 2-71, 2-73
369747	2-41, 2-43, 2-45, 2-47, 2-71, 2-73
369811	3-3
370100	2-123
371503	6-21
371509	6-17
371562	6-17
371770	2-37, 2-39
371790	3-71
371854	2-43, 2-47
371855	2-23
371860	2-23, 2-51, 2-53
371861	2-51, 2-53
371863	2-49
371865	2-49
371866	2-23
371868	2-23
371869	2-23
371870	2-23
371871	2-49
371872	2-49
371876	2-23
371877	2-23, 2-37, 2-39
371890	2-23
371931	5-5
371932	5-5
371933	5-5
371934	5-5
371935	5-5
371936	5-5
371937	5-5
371938	5-5
371940	5-8
371941	5-8
371942	5-5
371943	5-8
371944	5-5
371945	5-5
371946	5-5
371947	5-7

Part Number	Page Number
371948	5-7
371949	5-7
371950	5-7
371951	5-7
371952	5-7
371954	5-3
371955	5-3
371956	5-3
371957	5-3
371958	5-3
371959	5-8
371960	5-8
371961	5-8, 5-11
371962	5-5
371963	5-5
371964	5-5
371965	5-5
371966	5-5
371967	5-5
371968	5-5
371969	5-5
371970	5-5
371971	5-5
371972	1-1, 2-23, 5-8
371973	5-8
371975	5-8
371976	5-5
371977	5-5
371978	5-5
371979	5-5
371980	5-7
371981	5-7
371983	5-7
371984	5-7
371986	5-7
371987	5-7, 5-8
371988	5-7
371990	5-3, 5-7
371991	5-7
371992	5-8
371993	5-7
371994	5-7
371995	5-8
371996	2-23, 5-7
371997	5-7
371998	5-7
371999	5-3, 5-5
372000	5-7
372001	5-7
372002	2-23, 5-7
372003	5-7
372004	5-7
372005	5-7
372007	5-3
372008	5-3
372009	5-11
372010	5-11
372011	5-11
372012	5-11
372013	5-11
372014	5-11
372015	5-11
372016	5-11
372017	5-11
372018	5-3
372019	5-3
372020	5-9, 6-16
372021	5-9
372022	5-3
372023	5-3
372024	5-3
372025	5-3
372026	5-3
372027	5-3
372028	5-3
372029	5-3
372030	5-3
372031	5-3
372032	5-3
372033	5-3
372034	5-3
372035	5-3
372036	5-3
372037	5-3
372038	5-3
372039	5-3
372040	5-11
372041	5-11
372043	5-11
372044	5-11
372046	5-11
372047	5-3
372048	5-3
372049	5-9
372050	5-9
372051	5-9
372052	5-9
372053	5-9
372055	5-12
372056	5-12
372057	5-12
372058	5-12
372059	5-12
372060	5-12
372066	5-9
372235	2-238
372236	2-238
372237	2-238
372440	1-1, 2-83, 2-85
372470	2-27, 2-29, 2-35, 2-67, 2-69
372482	2-31
372484	2-31
372489	2-25
372491	2-51
372492	6-25
372493	2-25, 2-27, 2-29, 2-31, 2-35, 6-25
372497	2-32
372498	2-31
372500	2-31
372501	2-32
372503	2-31
372506	2-31
372507	2-31
372510	2-31, 2-35
372511	2-31
372512	2-31
372514	2-31
372515	2-31
372517	2-31
372518	2-31
372523	2-31
372528	2-31, 2-37
372529	2-37, 2-39
372534	2-25, 2-27, 2-35
372537	2-25, 2-31
372539	2-37, 2-39
372541	2-23
372542	2-25
372543	2-25, 2-27, 2-29, 2-35
372544	2-25, 2-27, 2-29, 2-31
372545	2-25, 2-27, 2-29
372546	2-25
372547	2-25, 2-27, 2-29, 2-31, 2-35
372548	2-27, 2-29, 2-31, 2-35
372549	2-25, 2-27, 2-29, 2-31, 2-35
372550	2-25, 2-27, 2-29, 2-31, 2-35
372556	2-23
372557	2-49
372558	2-31
372560	5-8
372563	2-25
372566	2-25
372567	5-7
372569	2-31
372572	5-7
372573	5-3
372574	5-3
372575	1-1, 5-12
372576	2-31
372577	2-31
372579	2-31, 2-35
372580	2-31
372582	2-31
372603	5-12
372605	2-31
372606	2-31
372607	2-31
372608	2-31
372609	2-31
372610	2-31
372611	2-31
372612	2-31
372613	2-31
372615	1-1, 2-31, 2-37
372616	5-11

Part Number	Page Number
372857	2-31
372858	2-25
372862	2-23
372863	3-71
372882	5-3
372891	6-25
372898	2-31
372953	2-23
373217	4-5
373226	4-5
373236	4-5
373260	4-5
373291	4-5
373297	4-5
373298	4-5
373299	4-5
373317	4-7
373327	4-7
373346	4-7
373347	4-7
373348	4-7
373389	4-7
373391	4-7
373393	4-7
373394	4-7
373395	4-7
373398	4-7
373402	4-7
373413	4-7
373427	4-7
373429	4-7
373434	4-7
373493	4-7
373494	4-7
373631	4-19
373633	4-11, 4-13, 4-15, 4-17, 4-21, 4-23
373637	4-11, 4-21, 4-23
373639	4-11, 4-21, 4-23
373640	4-11, 4-13, 4-15, 4-17, 4-19, 4-21, 4-23
373642	4-13, 4-15, 4-17, 4-19, 4-21, 4-23
373646	4-13, 4-15, 4-17, 4-19
373647	2-177, 4-11, 4-13, 4-15, 4-17, 4-19, 4-21, 4-23
373648	4-11, 4-13, 4-15, 4-17, 4-19, 4-21, 4-23
373656	4-11, 4-13, 4-15, 4-17, 4-21, 4-23
373657	4-11, 4-13, 4-15, 4-17, 4-19, 4-21, 4-23
373658	4-11, 4-13, 4-15, 4-17, 4-19, 4-21, 4-23
373659	4-11
373660	4-11, 4-21, 4-23
373661	4-13, 4-15, 4-17
373662	4-13, 4-15, 4-17
373663	4-13, 4-15, 4-17, 4-19, 4-21, 4-23
373664	4-13, 4-15, 4-19, 4-21
373665	4-19, 4-21, 4-23
373666	4-19, 4-21, 4-23
373667	4-19, 4-21, 4-23
373668	4-19, 4-21, 4-23
373669	4-19
373670	4-13, 4-15, 4-17, 4-19, 4-21, 4-23
373671	4-19, 4-21, 4-23
373672	4-13, 4-15, 4-19, 4-21
373673	4-13, 4-15, 4-19, 4-21
373678	4-7
373679	4-7
373680	4-7
373681	4-7
373683	4-15, 4-17
373684	4-21, 4-23
373688	4-21, 4-23
374560	2-91
374563	2-91
375321	3-63
375322	3-3
37555	4-8, 4-9
37616	4-5
377236	3-17
377349	2-136, 3-3
377537	1-2
377538	1-2
377540	1-2
37756	4-5
379609	2-91, 4-5
379791	2-109, 2-111
379870	2-129, 2-133
381391	2-71, 2-73
381502	2-95
381858	2-161
381862	2-161
382099	2-117
382224	2-95
382320	2-135, 2-136, 2-143, 3-70
382516	2-13
38255	4-5
383165	2-13
383912	2-83
384418	2-21, 2-127, 2-131
384419	2-21
384442	2-49, 2-51, 2-53
384961	5-5
384962	5-8
384963	5-5
384964	5-5
384966	5-7
384968	5-7
384970	2-37, 2-39
384971	2-37, 2-39
384972	2-27, 2-29, 2-35
384973	2-37, 2-39
384974	2-25, 2-27, 2-29, 2-35
384975	2-37
384977	2-37, 2-39
384978	2-37, 2-39
384979	2-37, 2-39, 6-22, 6-29
384980	2-35
384983	2-37
384984	2-37, 2-39
384986	2-37, 2-39
384990	2-238
384991	2-35
384992	2-27, 2-29
384995	2-27, 2-29, 2-35
384996	2-35
384997	2-238
384998	2-238
384999	2-238
385001	6-15
385009	2-85
385011	6-22
385015	6-15, 6-16, 6-19, 6-21, 6-22
385029	2-23
385644	3-23, 3-25, 3-31, 3-33, 3-41, 3-43, 3-63
385685	2-136, 2-143, 3-5
386088	2-129, 2-133
386264	2-123
386298	2-123, 3-9
386652	3-5
386847	2-121
387237	2-123
387281	2-165
387433	2-123
387500	2-123
388153	2-17
388552	5-11
38968	4-5
390994	2-135
391368	2-19
39210	2-115, 2-175, 3-15
392171	2-13
392609	2-147
392629	2-83
392645	2-87
39277	2-7, 2-9, 2-41, 2-43, 2-45, 2-47, 2-55, 2-59, 2-71, 2-73, 2-75, 2-79, 2-81, 2-83, 2-85, 2-87, 2-105, 2-139, 2-145, 2-149, 2-171
39278	2-99
39279	2-95
39281	2-75, 2-125
39283	2-7, 2-9, 2-23, 2-59, 2-171
39284	2-51, 2-53, 2-77, 3-67
39285	2-151
39308	2-129, 2-133
39311	2-9, 2-49, 2-105

Part Number	Page Number
39312	2-105
393135	2-127, 2-131, 3-65
393209	2-49
393215	2-91, 2-101
393255	3-13
39349	2-9, 2-15, 2-21, 2-49, 2-75, 2-77, 2-99, 2-129, 2-133, 2-135, 2-139, 2-145
39350	2-91
393982	1-1, 2-63, 2-65, 6-21
394916	2-238
394921	2-238
39527	2-113, 2-115, 4-8
39534	2-147, 2-151
395825	2-109
395973	2-175, 3-15
395974	2-175, 2-177, 3-15
396221	2-159
396255	2-161, 2-163
396266	2-161
396438	2-161
396476	2-175, 3-15
397648	3-59
39785	2-49
39810	2-23
39811	2-117
398279	2-41, 2-43, 2-45, 2-47, 2-71, 2-73
398468	2-83, 3-19
398474	3-19
398500	3-63
398501	2-13
398508	2-13
39924	2-107
40362	2-173
40607	2-107
40678	2-171
41130	2-147
41139	2-21
41141	2-119
41142	2-49
41169	2-97, 2-99
41178	2-15, 2-56, 2-59, 2-79, 2-151
41185	2-129, 2-133
41186	2-49, 2-75, 2-99, 2-139, 2-145, 2-147, 3-11
41187	2-53, 2-99, 2-121, 2-129, 2-133
41295	3-3, 3-5
41315	2-141
41346	3-11
41359	3-37
41361	2-23
41399	2-97
41430	2-55, 2-59, 2-79, 2-87, 2-151, 2-171, 3-55, 3-67
41445	2-129, 2-133
41579	4-29
41619	2-117, 2-121, 2-129, 2-133
42011	2-49
42120	2-117
42120-1	2-101
42133A	3-3, 3-19, 3-29, 3-39
42180	2-97
42215	2-151
42223	2-91
42226	2-147, 2-175, 2-177, 3-15
42467	2-99
43555	2-123, 2-139, 2-145
43844	2-25, 2-27, 2-32, 2-37, 2-55, 2-56, 2-61, 2-81, 3-3, 3-5, 3-29, 3-39
44868	2-113, 2-115, 2-151, 2-169, 2-175, 3-15
44869	2-151, 2-169, 2-173, 3-15
44961	4-29
45622	4-5
45623	4-5
45628	4-8, 4-9
46236	3-49, 3-51
46314	2-25, 2-31
46480	2-175
46481	2-171
46482	2-173, 2-177
46559	2-99
46563	2-95
46785-1	2-121
46800	3-7
47504	3-15
47512	2-169
47513	2-149, 2-169
47522	2-91, 2-175
47585	2-17
47638	2-101
47719	3-13
47752	2-171
47801	2-91
48079	2-99
48126	2-85
48267	2-83
48790	3-39
48813	4-10
48985	2-117, 3-11
48996	2-49
48998	2-49, 2-75
49145	2-93
49266	2-13, 2-25, 2-27, 2-59, 2-91, 2-115, 3-19, 3-39, 3-52, 3-53
49697	2-127, 2-131
49800	2-15, 2-55
49883	2-75, 2-175
49933	2-147, 2-175, 2-177
50161	2-171
50178	3-13
50335	2-23, 2-99
50544	2-141
50646	2-107
50901	3-39
50960	2-151
51109	2-95
51176	2-23, 2-63, 2-65
51305	2-25, 2-27, 2-32, 2-37, 2-55, 2-61, 2-81
51338	2-91
51339	2-91
51754	2-165
51787	2-171
51824	2-117
51839	2-25, 2-27, 2-29, 2-32, 2-37, 2-39
52405	4-5
53076	2-169
53400-1	2-87
53400-4	2-87
53466	2-7, 2-9, 2-55, 2-81, 2-89, 2-171, 3-21
53485	2-151, 4-10
53947	2-99
53953	2-99
54017	2-159
54051	2-91
54052	2-91
54087	2-91
54095	4-10
54205	2-99
54274	2-55, 2-59, 2-79, 2-147, 2-149, 2-151
54275A	2-147, 2-151
54333	2-27, 2-37, 2-71, 2-73, 2-83, 2-85, 2-89, 3-13, 3-19, 3-23, 3-25, 3-29, 3-31, 3-33, 3-39, 3-41, 3-43, 3-63
54390	2-93
54607	2-95
54615	2-143
54655	2-99
54861	2-147
55272	3-49, 3-51, 3-52, 3-53
55455	2-173
55586	2-113, 2-115, 2-175, 2-177, 3-15
55685	3-15
55845	3-59, 3-61
55926	4-7
56078	2-113, 2-115
56185	2-17
56186	2-233, 3-19, 3-29, 3-37, 3-63
56690	2-17, 2-173, 3-15, 3-17
56692	2-149, 3-7

Part Number	Page Number
56820	2-17, 2-175, 2-177, 3-15
56821	3-7, 3-9
56835	2-17
56992	2-13
57189	2-147
57248	3-29
57297	2-87
57315	2-91
57569	2-79
57702	3-67, 3-69
57804	2-89, 2-238
57946	2-165
58311	2-95
58366	2-61
58494	2-15
58589	2-87
58590	2-87
58592	2-173
58819	2-7, 2-9, 2-97
58842	2-91
58979	2-143
59009	2-95
59156	2-87, 3-11
59194	2-129
59195	2-133
59378	4-10
59542	2-101
59577	2-17, 2-177, 3-17
59633	3-11
59649	2-151
59668	2-97
59735	2-151
59967	2-151
60090	2-171, 3-15
60295	2-89
607775	4-29
61490	4-8, 4-9
61869	2-29
62471	2-171
62595-15	2-85
630164	3-39
630371	3-3
63175-1	3-11
63233	3-11
63234	2-99
63244-2	3-3
63245-1	3-19
63378	2-87
63430	3-59, 3-61
63448	3-59, 3-61
63451	3-59, 3-61
63468	2-125
63810	2-25, 2-27, 2-29, 2-32, 2-37, 2-39, 2-141, 3-3, 3-5, 3-13, 3-23, 3-25, 3-31, 3-33, 3-41, 3-43, 3-63
63923	4-26
63987-1	3-39
64379	2-109
64425	2-125, 2-127, 2-129, 2-131, 2-133, 3-7
64743	3-19
64778	3-39, 3-63
65145-1	2-169
65180	2-125
65215	2-173
65230	4-9
65241	4-8
65441	2-97
65580	3-61
65581	3-39
65695	2-113, 2-115
67004	3-59, 3-61
67555	2-117
67767	2-37, 2-55, 2-87, 2-97
67811	2-169
68866	2-97
68869	2-89
69173	2-175, 2-177
69234	2-73, 2-87
69582	2-95
69657	3-59, 3-61
69659	3-59, 3-61
69785	2-136
70096	4-7
70100	4-7
70157	2-9, 2-149
70563	2-113, 2-115
70622	2-17
70623	2-17
70709	2-17
70717	2-17
71204	2-121
71340	2-91
71341	2-91
71367	2-95
71369	2-117
71556	2-161, 2-163
71607	2-129, 2-133
71726	2-173
71727	2-175, 2-177
71729	2-113, 2-115, 4-8
71735	2-161
71741	2-161, 2-163
71868	3-11
71869	3-11
71874	3-11
71941	2-19
72897	2-101
72926	2-91
72968	3-39, 3-61
72970	2-17
73027	2-17
73260	3-3, 4-26
73281	2-91
73342	4-3
73411	2-99
73433	3-3
73468	3-3, 3-29, 3-39
73471	2-25, 2-27, 2-32, 2-37, 2-55, 2-61, 2-81
73736	2-13
74077	2-21
74090	2-139, 2-145
74094	4-8, 4-9
74095	4-8
74098	4-8, 4-11, 4-19, 4-21, 4-23
74099	4-8
74100	4-8, 4-9
74122	4-5
74123	4-5
74125	4-5
74165	4-5
74166	4-5
74167	4-5
74168	4-5
74180	4-7
74183	4-25
74185	4-25
74193	4-25
74196	4-25
74222	4-25
74225	4-7
74226	4-7
74232	4-25
74233	2-147, 4-10
74237	4-7
74243	4-25
74244	4-25
74245	4-25
74250	4-8, 4-9
74440	2-99
74454	2-151
74455	2-7, 2-55, 2-171
75456-3	2-147
75456-4	2-147
75968	2-17
76099	2-119, 3-21, 3-25, 3-33, 3-43
761490	2-7, 3-13
762249	3-19
762282	2-29, 2-39
762514	2-89
763042	2-103
763090	2-117
763114	3-19
763115	3-52, 3-53
763116	2-105, 3-19, 3-25, 3-33, 3-43
76315	2-149
76316	2-175, 3-17
76426	2-143
76570	2-75, 2-139, 2-145
76888	2-15
76958	2-49
769785	3-63
77003	4-11, 4-19, 4-21, 4-23

Part Number	Page Number
77005	4-11, 4-13, 4-15, 4-17, 4-19, 4-21, 4-23
77006	4-19
77097	2-109, 2-111, 2-121, 2-129, 2-133, 2-175, 2-177, 3-11
77098	2-117, 2-149, 2-151, 3-11
77221	2-241
77345	2-91
78122	2-87
78398	3-3, 4-3
78829	4-3
78830	4-3
78833	4-3
78836	4-3
78838	4-3
78839	4-3
78840	4-3
78841	4-3
78842	4-3
78843	4-3
78875	4-26
78950	4-27
78951	4-27
78952	4-27
79273-1	3-23, 3-25
79273-2	2-141
79380	2-147
79381	2-51, 2-53, 2-55, 2-61, 2-81
79484	3-3
79497	3-3
79506	2-139, 2-145
79729	4-5
79828	4-5
80288	2-9
80395	2-123, 2-139, 2-145
80409	2-125
80950	2-125
81784	2-129, 2-133
81952	2-125
82727	2-9
82739	2-107
82832	2-91
82839	3-13
83578	2-25, 2-27, 2-32, 2-37
83874	1-1, 2-123
83879	2-99
84170	2-99
84597	1-2
86508	3-3
86636	2-143
86659	2-93
86751	2-95
86759	3-7
86866	2-117
87536	2-13
87631	2-113, 2-115
87730	2-83
87738	2-61, 2-81
87816	2-129, 2-133
87866	1-1, 2-13
9000355	2-83, 2-85
9000845	3-51, 3-53
9000846	3-49, 3-52
9000879	3-49, 3-51, 3-52, 3-53
9001310	3-63
9001314	3-55
9001316	3-70
9001321	3-47
9001327	3-49
9001331	3-51
9001334	3-59, 3-61
9001338	3-67
9001717	3-53
9001718	3-52
9002380	2-9
9002381	2-9
9002391	2-13
9002392	2-13
9002394	2-51, 2-53
9002395	2-83
9002398	2-173
9002399	2-7
9002400	2-7
9002401	2-7
9002409	2-9
9002435	2-13
9002553	1-1
9002554	1-1
9002555	1-1
9002613	1-1
9002683	2-151
9002684	2-147
9002708	4-3
9002709	4-3
9003009	4-32
9003068	2-136
9003069	2-135
9003070	2-136
9003071	2-135
9003313	2-143
9003345	5-3
9003390	2-27, 2-29
9003391	2-35
9003422	2-9
9003423	2-9
9003425	2-9
9003426	2-9
9003428	2-9
9003429	2-9
9003431	2-9
9003432	2-9
9003433	2-9
9003444	2-105
9003449	2-143
9003453	2-13
9003455	2-147
9003461	2-147
9003610	2-85
9003774	2-103
9003793	2-139
9003794	2-145
9003832	2-53
9003893	2-143
9003926	3-71
9003997	2-55
9004117	2-135
9004475	4-21, 4-23
9004493	2-123
9004674	5-11
9004675	5-11
9004880	2-13
9004983	2-53
9005165	2-135, 2-136
9006257	3-71
9006334	2-7, 2-107, 3-13
9006386	2-115
9006398	2-113, 2-115
9006592	2-85
9006618	2-35, 6-30
9006619	2-29, 2-35, 6-28
9006620	2-39, 6-29
9006634	2-23
9006635	2-23
9006811	2-59
9006813	2-59
9006895	2-23
9006917	2-49
9007088	2-49
9007131	3-47
9007142	2-169
9007380	1-1, 2-39, 6-29
9007381	1-1
9007382	1-1
9007423	2-35, 6-30
9007424	2-35, 6-30
9007513	2-7
9007552	2-39
9007553	2-39
9007882	3-37, 4-29
9007883	4-29
9007912	2-13
9007913	2-13
9008193	6-29
9008197	2-23, 5-7
9008248	2-91
9008395	2-23
9008757	4-32
9008804	6-29
9008805	6-25, 6-29
9008806	6-30
9008807	6-30
9008808	6-30
9008848	4-32
9008868	3-29, 4-32
9010085	3-57
9010086	3-57
9010096	2-79

Part Number	Page Number
9010097	2-79
9010215	6-22
9010217	6-20
9010219	6-20
9010222	6-17
9010223	6-17
9010224	6-17
9010225	6-17
9010226	6-17
9010227	6-17
9010228	6-17
9010229	6-17, 6-21
9010230	6-17
9010231	6-17
9010232	6-18
9010233	6-18
9010234	6-18
9010235	6-18
9010236	6-18
9010237	6-18
9010238	6-18
9010239	6-16, 6-18
9010240	6-18, 6-19
9010241	6-18
9010242	6-18
9010243	6-19
9010244	6-19
9010245	6-20
9010246	6-20
9010247	6-25
9010248	6-25
9010249	6-25
9010250	6-9
9010251	6-9
9010252	6-9
9010253	6-9, 6-21
9010254	6-9
9010255	6-25
9010256	6-25
9010257	6-25
9010258	6-25
9010259	6-12
9010260	6-25
9010261	6-25
9010262	6-16, 6-25, 6-29
9010263	6-25
9010264	6-25, 6-29
9010266	6-27, 6-28
9010267	6-28
9010268	6-27, 6-28
9010269	6-28
9010270	6-28
9010271	6-28
9010272	6-29
9010273	6-29
9010274	6-29
9010275	6-29
9010276	6-29
9010277	6-29
9010278	6-29
9010279	6-29
9010280	6-29
9010281	6-15
9010282	6-15
9010283	6-15
9010284	6-15
9010285	6-15
9010286	6-15
9010287	6-15
9010288	6-15
9010289	6-22, 6-23
9010290	6-22
9010291	6-22
9010294	6-22
9010295	6-22
9010296	6-16
9010297	6-16
9010298	6-16
9010302	6-16
9010303	6-16
9010305	6-23
9010306	6-23, 6-26
9010307	6-23
9010308	6-23
9010309	6-23
9010310	6-23
9010311	6-7
9010312	6-7
9010313	6-7
9010314	6-30
9010317	6-29
9010327	6-26
9010330	6-27
9010331	6-27
9010359	6-18
9010360	6-18
9010366	6-25
9010367	6-25
9010371	6-21
9010372	6-21
9010373	6-21
9010374	6-21
9010375	6-21
9010376	6-21
9010377	6-21
9010380	6-21
9010382	6-15
9010383	6-15
9010384	6-15
9010419	6-3
9010420	6-3
9010421	6-3
9010422	6-3
9010423	6-3
9010424	6-3
9010425	6-3
9010426	6-3, 6-12
9010427	6-3
9010428	6-3
9010429	6-3
9010430	6-3
9010431	6-3, 6-5
9010432	6-3
9010433	6-3
9010434	6-3
9010435	6-3
9010436	6-3
9010437	6-3
9010438	6-3
9010439	6-3
9010440	6-3
9010441	6-3, 6-5
9010442	6-3
9010443	6-3
9010444	6-3
9010445	6-3
9010446	6-3
9010447	6-3
9010448	6-3
9010449	6-3
9010450	6-3
9010451	6-3
9010452	6-3
9010453	6-3
9010454	6-3
9010455	6-3
9010456	6-3
9010457	6-3
9010458	6-3
9010459	6-3
9010460	6-4
9010461	6-4
9010462	6-4
9010463	6-4
9010464	6-4
9010465	6-4
9010466	6-4
9010467	6-5
9010468	6-5
9010469	6-5
9010470	6-5
9010471	6-5
9010473	6-5
9010479	6-19
9010480	6-5
9010481	6-5
9010482	6-5
9010483	6-5
9010484	6-5
9010485	6-5
9010487	6-7
9010488	6-7
9010489	6-7
9010490	6-7
9010491	6-7, 6-9
9010492	6-7
9010493	6-7
9010494	6-7
9010495	6-7
9010496	6-7

Part Number	Page Number
9010497	6-7
9010498	6-7
9010502	6-7
9010503	6-7, 6-13
9010504	6-7
9010505	6-7
9010506	6-7
9010507	6-7
9010508	6-7
9010511	6-7
9010512	6-7
9010513	6-10
9010514	6-10
9010515	6-10
9010516	6-10
9010517	6-10
9010518	6-10
9010519	6-10
9010520	6-10
9010521	6-10
9010522	6-10
9010523	6-10
9010524	6-10
9010525	6-10
9010526	6-10
9010527	6-10
9010528	6-10
9010529	6-10
9010530	6-9
9010531	6-9
9010532	6-9
9010533	6-9
9010534	6-9
9010535	6-9
9010536	6-9
9010537	6-9
9010538	6-9
9010539	6-9
9010540	6-9
9010541	6-9
9010542	6-9
9010543	6-9
9010544	6-9
9010545	6-9
9010546	6-9
9010547	6-9
9010548	6-9
9010549	6-9
9010550	6-9
9010551	6-9
9010552	6-9
9010554	6-9
9010555	6-9
9010556	6-9
9010557	6-9
9010559	6-9
9010560	6-9
9010561	6-9
9010562	6-9
9010563	6-9
9010564	6-9
9010565	6-9
9010567	6-9
9010568	6-9
9010569	6-9
9010570	6-11
9010571	6-11
9010572	6-11
9010574	6-11
9010575	6-11
9010576	6-11
9010577	6-11
9010578	6-11
9010579	6-11
9010580	6-11
9010582	6-12
9010583	6-12
9010585	6-12
9010586	6-12
9010587	6-12
9010589	6-12
9010590	6-12
9010591	6-12
9010592	6-12
9010593	6-12
9010594	6-12
9010595	6-12
9010596	6-12
9010597	6-12
9010598	6-12
9010599	6-12
9010600	6-11, 6-12
9010601	6-12
9010602	6-13
9010603	6-13
9010604	6-13
9010606	6-13, 6-15
9010607	6-13
9010609	6-13
9010610	6-13
9010612	6-13
9010613	6-15
9010615	6-15
9010617	6-15
9010618	6-15
9010619	6-16
9010622	1-1, 6-19
9010623	6-17
9010624	6-17
9010625	6-17
9010626	6-29
9010628	6-21
9010629	6-21
9010630	6-21
9010631	6-21
9010632	6-22
9010634	2-35, 6-30
9010635	3-71
9010904	2-81
9010905	6-22
9010910	6-22
9010988	3-69
9011343	4-17, 4-23
9011345	4-17, 4-23
9011346	4-17, 4-23
9011347	4-17, 4-23
9012585	4-31
9012587	4-31
9012589	4-31
9012590	4-31
9012591	4-31
9012592	4-31
9012593	4-31
9012594	4-31
9012595	4-31
9012597	2-53
9013159	2-77
9013530	6-22
9014160	6-19
9014162	6-5
9014202	2-63, 2-65
9014281	3-39
9014662	2-5
9014666	2-5
9014867	3-65

PART DESCRIPTION TO PAGE NUMBER CROSS REFERENCE LIST

A

Ace, Thrust, Motor, Hyd [En], 4-9
Actuator [Mit , Bosch], 6-27, 6-28
Actuator, Valve, By-Pass [En], 4-7
Adapter , 2-29, 2-35, 6-28
Adapter [1.6], 2-31
Adapter, Filter, Oil, Remote [Mit], 6-21
Adapter, Intake, Throttle Body, 2-25, 2-27, 2-35
Adapter, Plate, 2-31
Adapter, Rod-End, Side Brush, 3-11
Adapter, Throttle Body, 2-31
Adapter, Valve, 400mm [Bosch], 2-35
Adapter, Valve, Fuel Trim, 2-31
Adjuster Assy, Lash, 6-9
Alarm Assy, Backup, 12/48Vdc, 3-47
Alarm Kit, Backup, Ci [M20 And T20], 3-47
Alarm, 9-48vdc, 95 Db(A) [Ec-H20], 3-37
Alarm, Warning [Sonalert, St628], 2-89
Alternator, 12vdc 075a [Multi Grv], 2-49
Alternator, 7si [Mit Df Sur-Belt], 6-20
Angle, Brace, Shrd, 2-21
Angle, Lh, 2-121
Angle, Mtg, 2-99
Angle, mtg, Antenna, Telem, 3-57
Angle, Mtg, Stl, .12 1.6 1.6 02.2l, 2-171
Angle, Mtg, Valve, 3-13
Angle, Retainer, 2-103
Angle, Rh, 2-121
Angle, Sppt, Fan, 2-147, 2-149
Angle, Sppt, Tank, Rear, 2-135
Antenna, Telem, 70 In [Gprs], 3-57
Arm [Positioning], 2-99
Arm Assy, Rocker [A], 6-9
Arm Assy, Rocker [B], 6-9
Arm Assy, Rocker [C], 6-9
Arm Wldt, Alternator [Mit 2013], 2-75
Arm Wldt, Lift, Sqge, Lh, 2-133
Arm Wldt, Safety, Sppt, Seat, .38d 06.5d, 2-15
Arm Wldt, Safety, Sppt, Seat, .38d 10.1l, 2-143
Arm Wldt, Sqge, Lift, Rh, 2-129
Arm, Cntrl, Pintle, Centering, 2-99
Arm, Lever, Brake, 4.1 [Knott], 2-93
Arm, Link, 3-11
Arm, Pinch, 2-139, 2-145
Arm, Pintle, 2-99
Arm, Rocker, Valve, 5-3
Arm, Sqge, Side, Lh, 2-133
Arm, Sqge, Side, Rh, 2-129
Armrest, 4-31
Armrest, Rh, 2-15

B

Bag, Power, 3-61
Ball, Camshaft, 5-11
Bar Wldt, Retainer, Sqge, Rear, 2-123
Bar, Flat, Ss, .06 X .50 X 10.0l 2/.19sl, 2-13
Bar, Flat, Stl 0.19, 01.50 X 04.1l, 2-91
Bar, Isolator, Vacfan [M20 2007], 2-151
Bar, Isolator, Vacfan [M20], 2-151
Bar, Mtg, Hppr, 2-103
Bar, Mtg, Hppr Cover, 2-105
Bar, Retainer, 3-7
Bar, Rnd, Plstc, 0.31d 12.5l, 2-135, 2-136
Bar, Tensioner, Mtg [Mit 2.0/2.4l], 6-17
Base Assy, Fan, W/O Pulley, 2-49
Battery, 12vdc, 0475cca, Ah, Wet, 2-89
Battery, Wet, 12vdc 0475cca, 1-1
Bearing Kit [Cl], 4-25
Bearing Kit, Cshft, 1.989-1.995mm (Brown - Middle), 5-5
Bearing Kit, Cshft, 1.989-1.995mm (Std Brown), 5-5
Bearing Kit, Cshft, 1.995-2.001mm (Brown Blue), 5-5
Bearing Kit, Cshft, 1.995-2.001mm (Green - Middle), 5-5
Bearing Kit, Cshft, 2.114-2.120mm (Green), 5-5
Bearing Kit, Cshft, 2.120-2.126mm, 5-5
Bearing Kit, Rod, Connecting, Std, 5-5
Bearing, Ball, 0.98b 2.05d 0.59w, 2-113, 2-115
Bearing, Ball, 1.18b 2.44d 0.63w, 2-93
Bearing, Ball, 20mm B 42mm D 12mm W, 2-49, 2-75, 3-69
Bearing, Cone, 1.38b 0.71w, 2-91
Bearing, Cone, Pump, Hyd, 4-7
Bearing, Cshft [Black Std 3], 6-3
Bearing, Cshft [Green Std 3], 6-3
Bearing, Cshft [Lan Std 1,2,4,5], 6-3
Bearing, Cshft [Lan Std 3], 6-3
Bearing, Cshft [No Color Std 3], 6-3
Bearing, Cshft [Red Std 1,2,4,5], 6-3
Bearing, Cshft [Yellow Std 3], 6-3
Bearing, Cshft [Green Std 1,2,4,5], 6-3
Bearing, Cshft [Yellow Std 1,2,4,5], 6-3
Bearing, Cshft[No Color Std 1,2,4,5], 6-3
Bearing, Cup, 4-7
Bearing, Cup, 2.56d 0.55w, 2-91
Bearing, Flng, 2-Hole, 0.50b, 2-17
Bearing, Flng, 2hole, 0.50b [Nyl], 2-17
Bearing, Oversize [1.0], 6-3
Bearing, Pillowblock, 1.02b [Solid Pye], 2-95
Bearing, Rod, Connect [Lan Std], 6-10
Bearing, Rod, Connect [No Color Std], 6-10
Bearing, Rod, Connect [Yellow Std], 6-10
Bearing, Self Align, 0.75b 1.25d, 2-117
Bearing, Self Align, 1.25b 2.00d, 2-101
Bearing, Shaft, Balancer [Ovrsz], 6-3
Bearing, Shaft, Std, Balancer, 6-3
Bearing, Split, 1.00b, 2-95
Bearing, Std, Balancer, 6-3
Bearing, Thrust, 4-9
Bearing, Thrust, 0.53b 1.00d 0.03w, 3-11
Bearing, Thrust, Cshft, 6-3
Bearing, Thrust, Pump, Hyd, 4-7
Bellcrank, Lift, Sqge, 2-121
Bellows, Seat, 4-31
Belt, Ribbed, 38.5l, 1-1, 2-49
Belt, Ribbed, Alternator, 41.5l, 2-75
Belt, Ribbed, Fan, 42.13l, 2-75
Belt, Timing, 6-9, 6-11
Belt, Timing [Gm1.6l], 5-11
Blade, Sqge, .38 3.55w 038.3l, Linatex, 2-127, 2-131
Blade, Sqge, .38 3.55w 038.3l, Ure, 1-1
Blade, Sqge, .38 3.55w 038.3l, Ure (Option), 2-127, 2-131
Blade, Sqge, 37.08l Linatex, 1-1
Blade, Sqge, Front [Linard], 1-1
Blade, Sqge, Front, 49.58l [Linard], 2-123
Blade, Sqge, Front, 49.58l Ure (Option), 2-123
Blade, Sqge, Front, 49.59l Pyu, 1-1
Blade, Sqge, Rear, 53.78L Pyu, 1-1
Blade, Sqge, Rear, 53.78l Ure (Option), 2-123
Blade, Sqge, Rear, Linatex, 1-1, 2-123
Blade, Sqge, Side Brush, Linatex, 1-2, 3-9
Blade, Sqge, Side Brush, Urethane, 1-2, 3-9
Block Assy, Cylinder, 6-3
Block, Centering, 2-121
Block, Guide, Hppr, 2-7
Block, Short, Eng, W/ Piston & Ring, 5-5
Block, Spacer, 2-75
Bolt, 6-7, 6-21
Bolt, 3/8-16 X 1 1/4 Hxhd [Mit], 6-17
Bolt, 3/8-16 X 4.5 [Mit], 6-17
Bolt, Belt, Balancer, Train, 6-11
Bolt, Bracket, Sensor,Cshft Position, 5-7
Bolt, Bracket,Screen,Oil Pump,M6x1x1, 5-7
Bolt, Camshaft Cover, 5-3
Bolt, Cap, Bearing, 6-3
Bolt, Carriage, M06 X 1.0 X 30, 2-109, 2-111
Bolt, Carriage, M06 X 1.00 X 40, 4.6, 3-37
Bolt, Carriage, M10 X 1.5 X 70, 2-125
Bolt, Connecting, 6-10
Bolt, Connecting Rod, 5-5
Bolt, Cover, Camshaft, M6 X 1 X 22, 5-11
Bolt, Cover, Oil Pump, M6 X 14, 5-7
Bolt, Cover, Water Pump, 5-7
Bolt, Eng Cover, M6 X 1 X 13, 5-11
Bolt, Eye, .25-20 X 1.40 X .25 Eye, 2-99
Bolt, Eye, M08 X 1.25 X 070mm, 05.50 Eye, 2-129, 2-133
Bolt, Eye, M10 X 1.50 X 064mm, 07.10 Eye, 2-121
Bolt, Flange, 6-3, 6-5, 6-7, 6-9, 6-11, 6-12, 6-13, 6-15
Bolt, Flywheel, 5-5
Bolt, Flywheel [Mit 20/24m], 6-18

Bolt, Head. Cyl, 5-3
Bolt, Hsng, Thermostat, 5-3
Bolt, M06 X 1.00 X 13mm, 5-8
Bolt, M08 X 1.25 X 25mm, 5-5
Bolt, M10 X 1.50 X 75mm, 5-5
Bolt, M10-1.25 X 20 Hxhd [Mit], 6-25
Bolt, M10-1.25 X 30 Soc Hd [Mit], 6-18
Bolt, M10-1.25 X 45 Soc Hd [Mit], 6-18
Bolt, M10-1.50 X 30 [Mit], 6-20
Bolt, M12 X 1.75 X 62mm, 5-5
Bolt, M12-1.75 X 25, Hex Hd [Mit], 6-18
Bolt, M6-1.0 X 10 Fl Hd [Mit], 6-16, 6-25, 6-29
Bolt, M6-1.0 X 12 Fl Hd Pl [Mit], 6-25
Bolt, M6-1.0 X 16 Fl Hd [Mit], 6-25
Bolt, M6-1.0 X 20 Fl Hd [Mit], 6-18, 6-19
Bolt, M6-1.0 X 25 Soc Hd [Mit], 6-28
Bolt, M6-1.0 X 30 Fl Hd [Mit], 6-25
Bolt, M6-1.0 X 45, Skt Hd [Mit], 6-27
Bolt, M6-1.0 X 85 Soc Hd [Mit], 6-28
Bolt, M8-1.25 X 12 [Mit], 6-23
Bolt, M8-1.25 X 15, Hx Hd [Mit], 6-18
Bolt, M8-1.25 X 16 Fl Hd [Mit], 6-29
Bolt, M8-1.25 X 16, Soc Hd [Mit], 6-26
Bolt, M8-1.25 X 20 Fl Hd [Mit], 6-17
Bolt, M8-1.25 X 25 [Mit], 6-17, 6-21
Bolt, M8-1.25 X 25 Flg Hd [Mit], 6-23
Bolt, M8-1.25 X 25 Soc Hd [Mit], 6-17
Bolt, M8-1.25 X 55 Fi Hd [Mit], 6-9
Bolt, M8-1.25 X 65 Hxhd [Mit], 6-9
Bolt, M8-1.25 X 70 Hxhd [Mit], 6-9, 6-21
Bolt, Manifold, Inlet, 6-15
Bolt, Motor, Hyd, 4-5
Bolt, Oil Pump Screen/Camshaft Cover, 5-7
Bolt, Pan, Oil, 5-8
Bolt, Pulley, Cshft, 5-5
Bolt, Pump, Oil, 5-7
Bolt, Retainer, Camshaft, M6 X 1 X 16, 5-11
Bolt, Rocker, Cover, 6-4
Bolt, Seal, 6-9
Bolt, Sensor, Position, Cshft, 5-7
Bolt, Shield, Manifold, Exhaust, 5-9
Bolt, Shld, .31d X 1.00, .25-20, 2-99
Bolt, Shld, 1.37d X 5.13l,1.1-18 Drilled, 2-91
Bolt, Soc Head, M5 X 80 X 35, 2-35
Bolt, Sprocket, Camshaft, M10x1.25x60, 5-11
Bolt, Sprocket, Cshft, 6-10
Bolt, Tensioner [GM], 5-11
Bolt, Tensioner, Timing Belt,M8x1.25x48, 5-11
Bolt, Tube [Pvc], M6 X 1 X 15, 5-3
Bolt, Washer, 6-9, 6-10, 6-12, 6-17
Boot, .63id .29l .90w, 2-13
Boot, Bellows, 3.1l 4.4w 2.8h 1hole, Neo, 2-17
Boot, Circuitbreaker, 3-37
Boot, Switch, Ignition, 2-13
Bracket Assy, Coil, Ignition, 6-7
Bracket Kit, Alternator, Repair, 2-49
Bracket Wldt, Alternator [Mit13], 2-75
Bracket Wldt, Alternator, Lower [Gm1.6l], 2-49
Bracket Wldt, Brush Wrap Mtg, Rh, 2-117
Bracket Wldt, Brush Wrap, Lh, 2-117
Bracket Wldt, Cooler, Hyd Fluid, 2-171
Bracket Wldt, Flap, Recirculation, 2-119
Bracket Wldt, Guard, Sqge, 3-67
Bracket Wldt, Latch, 2-19
Bracket Wldt, Mtg [FaST Gen 2+], 3-29
Bracket Wldt, Mtg [FaST], 3-21
Bracket Wldt, Mtg, Caster, 2-125
Bracket Wldt, Mtg, Eng, 2-23
Bracket Wldt, Mtg, Eng, Back, Gas/Lpg, 2-23
Bracket Wldt, Mtg, Eng, Rear [Mit 2013], 2-63, 2-65
Bracket Wldt, Mtg, Engine [Mit 2013], 2-63, 2-65
Bracket Wldt, Mtg, Fan, Upper, 2-59
Bracket Wldt, Mtg, Hose, 2-9
Bracket Wldt, Mtg, Reg, Lpg[Gm 2010], 2-39
Bracket Wldt, Mtg, Regulator, Lpg, 2-37
Bracket Wldt, Mtg, Side Brush, 3-7
Bracket Wldt, Mtg, Side Brush Fixed, 3-9
Bracket Wldt, Mtg, Sqge, 2-125
Bracket Wldt, Mtg, Tank, 2-9
Bracket Wldt, Pivot, Hppr Door, Lh, 2-109, 2-111
Bracket Wldt, Pivot, Hppr, Rh, 2-111
Bracket Wldt, Propel, Pintle, 2-99
Bracket Wldt, Radiator, Fan, Gas/Lpg, 3-69
Bracket Wldt, Steering, Tilt, 2-17
Bracket Wldt, Tank, Soltn, Rh, 2-135
Bracket Wldt, Tilt, Rh, 2-17
Bracket, Anchor, Strap, Alternator, 2-49
Bracket, Coil [Mit 2.0/2.4l], 6-19
Bracket, Cover, 2-59, 2-109, 2-111
Bracket, Cover, Hopper, 2-109, 2-111
Bracket, Cover, Hppr, 2-105
Bracket, Fan, Lh, 2-59
Bracket, Fan, Rh, 2-59
Bracket, Fan, Upper, Lh, 2-59
Bracket, Filter, Oil, Remote [Mit], 6-21
Bracket, Ftg, Bh, 2-55
Bracket, Guide, Shrd, 2-21
Bracket, Indicator, Timing, 6-9
Bracket, Keeper, Latch, 2-136
Bracket, Latch, Cover, 2-21, 2-136, 3-65
Bracket, Latch, Keeper [Southco], 2-21
Bracket, Latch, Shrd, Seat, 2-15
Bracket, Lip, Hppr, 2-109, 2-111
Bracket, Mtg, 2-9
Bracket, Mtg [Ecu], 2-25, 2-31
Bracket, Mtg [FaST Gen 2+], 3-29
Bracket, Mtg [FaST], 3-21
Bracket, Mtg, Alternator [Mit 2013], 2-75
Bracket, Mtg, Cable, 2-95
Bracket, Mtg, Cover, Recvy Tank, 2-143
Bracket, Mtg, Cyl, 2-99, 2-129, 2-133
Bracket, Mtg, Detgt And Spray Wand, 3-5
Bracket, Mtg, Ecu, 2-35
Bracket, Mtg, Ecu [M20/T20 2007], 2-27, 2-29
Bracket, Mtg, Fan, 2-147
Bracket, Mtg, Fltr, Air, 2-41, 2-43, 2-45, 2-47
Bracket, Mtg, Fltr, Air [Mit 2013], 2-71, 2-73
Bracket, Mtg, Fuel, 2-83
Bracket, Mtg, Insulation, 2-9
Bracket, Mtg, Latch, 2-55
Bracket, Mtg, Latch, Tank Cover, 2-135, 2-136
Bracket, Mtg, Lift, Scb Head, 2-117
Bracket, Mtg, Mirror, Rearview, 3-55
Bracket, Mtg, Motor, 2-147, 2-151
Bracket, Mtg, Muffler [M20/T20 2007], 2-53, 2-77
Bracket, Mtg, Prop Rod, 2-143
Bracket, Mtg, Radiator, 2-55, 2-59, 2-79
Bracket, Mtg, Scb Head, Lh, 2-117
Bracket, Mtg, Scb Head, Rh, 2-117
Bracket, Mtg, Skirt, 2-119
Bracket, Mtg, Skirt, Brush Door, 2-127, 2-131
Bracket, Mtg, Skirt, Door, 2-127, 2-131
Bracket, Mtg, Skirt, Door, Brush, 2-127, 2-131
Bracket, Mtg, Sppt, 2-91
Bracket, Mtg, Spray Handle, 3-63
Bracket, Mtg, Spray Wand [FaST, Conv], 3-63
Bracket, Mtg, Spring, 2-117
Bracket, Mtg, Sqge, 3-7
Bracket, Mtg, Strainer, 3-5
Bracket, Mtg, Switch, 2-107
Bracket, Mtg, Vacuum Wand, 3-59
Bracket, Mtg, Valve, 2-141, 3-3
Bracket, Mtg, Valve [Combined], 2-177
Bracket, Mtg, Valve, Hyd, Scb, 2-175
Bracket, Mtg, Valve, Hyd, Swp, 2-175
Bracket, Mtg, Valve, Lower, 2-177
Bracket, Muffler, 2-77
Bracket, Muffler, Hanger, Front, 2-51
Bracket, Pivot, Hppr Door, Rh, 2-109
Bracket, Propel, G/Lpg [Mit 2013], 2-99
Bracket, Propel, Gas/Lpg, 2-99
Bracket, Protector, Float Switch, 2-143
Bracket, Pulley, Tensioner, 6-9
Bracket, Pump, Mtg, 6-17
Bracket, Reg [1.6l], 2-31
Bracket, Retainer, Lh, 2-113
Bracket, Retainer, Pump, 3-29
Bracket, Retainer, Rh, 2-115
Bracket, Retainer, Safety, 2-99
Bracket, Retainer, Shield, Heat, 2-51
Bracket, Retainer, Spring, 2-5
Bracket, Retaining, Hose, 2-139, 2-145, 3-65
Bracket, Retaining, Wire, Sparkplug, 5-12
Bracket, Screen, Oil Pump, 5-7
Bracket, Seat, Adj, 2-15
Bracket, Sensor, Position, Cshft, 5-7

Bracket, Shield, Heat, 2-21
Bracket, Shrd, Fan, Lower, Gas/Lpg, 3-69
Bracket, Shrd, Fan, Lower, Sppt, G/Lpg, 2-79
Bracket, Shrd, Fan, Upper, Sppt, G/Lpg, 2-79
Bracket, Shrd, Fan, Upper, Sppt, Gas/Lpg, 3-69
Bracket, Shrd, Radiator, Gas/Lpg, Ce, 3-69
Bracket, Skirt, Rbr, 2-59
Bracket, Soltn, Tank, Cntr, 2-135
Bracket, Spacer, Controlbox, 3-57
Bracket, Sppt, 2-113, 2-115
Bracket, Sppt, Cover, Tank, Recvy, 2-143
Bracket, Sppt, Radiator, Upper, 2-56
Bracket, Sppt, Strobe Light, 3-47, 3-49
Bracket, Sppt, Strobel Light, 3-51
Bracket, Sppt, Tank, Lh, 2-143
Bracket, Sppt, Tank, Rh, 2-143
Bracket, Tank, Soltn, Lh, 2-135
Bracket, Tensioner, [Mit 2.0/2.4l], 6-17
Bracket, Tilt, Lh, 2-17
Bracket, Tube, Coolant, 2-61
Bracket, Valve, Sba [M20 And T20], 3-15
Bracket, Vaporizer [Mit 20/24m Tilt], 6-29
Brake Assy, Drum, Mech, 07.0d 1.2w, 2-93
Brush Assy, Disk, Scb, 16.0d, Heavy Duty Polypropylene, 2-5
Brush Assy, Disk, Scb, 16.0d, Nylon, 2-5
Brush Assy, Disk, Scb, 16.0d, Super Abrasive, 2-5
Brush Assy, Disk, Scrub, 16.0 D, Heavy Duty Polypropylene (Replaced by 1220236), 2-5
Brush Assy, Disk, Scrub, 16.0 D, Super Abrasive (Replaced by 1221543), 2-5
Brush Assy, Disk, Scrub, 16.0D, Nylon (Replaced by 1220235), 2-5
Brush Assy, Disk, Sweep, 24.oD, Polypropylene (Replaced by 1220185), 2-5
Brush Assy, Disk, Swp, 24.0d, Polypropylene, 2-5
Brush Kit, Hub Assy, Drive, Ci [Hdpe In], 2-5
Brush Kit, Hub Assy, Drive, Ci [Uhmw], 2-5
Brush, Sweep / Scb, 40L, Heavy Duty Polypropylene, 2-3
Brush, Sweep / Scb, 40L, Polyester, 2-3
Brush, Sweep / Scb, 40L, Polypropylene, 2-3
Brush, Sweep / Scb, 40L, Super Abrasive, 2-3
Brush, Sweep / Scb, 40L, Wndw, Super Abrasive, 2-3
Brush, Sweep / Scb, 40L, Wndw, Polypropylene, 2-3
Bumper Wldt, Brush, Side, 3-7, 3-9
Bumper, Rbr, 0.5d 0.16t M5 X 08, 2-99
Bumper, Rbr, 0.6d 0.34t .3d Tip, 2-171
Bumper, Sqge, 2-123
Bumper, Ure, 1.50d 1.25l, 3-67
Bushing, 6-3, 6-5
Bushing, Eccentric, Adj, 2-139, 2-145
Bushing, Flng, 0.32b 0.50d 0.24l, Bnz, 2-125
Bushing, Flng, 0.50b 0.59d 0.38l, 2-139, 2-145
Bushing, Flng, 0.63b 0.75d 0.38l, 2-125, 2-127, 2-131
Bushing, Flng, 1.00b 1.13d 0.50l, 2-111, 2-121
Bushing, Knock, 6-3
Bushing, M06-1.50 X .25-27npt, 2-25, 2-31
Bushing, Pivot, Door, 2-109
Bushing, Sleeve, 0.37b 0.50d 0.50l, Oib, 2-95
Bushing, Sleeve, 0.50b 0.59d 0.50l, Bnz, 3-11
Bushing, Sleeve, 0.62b 0.72d 0.50l, Fgl, 2-125
Bushing, Sleeve, 0.63b 0.72d 0.38l, 2-129, 2-133
Bushing, Sleeve, 0.75b 0.88d 0.25l, 2-139, 2-145
Bushing, Sleeve, 0.75b 0.88d 0.75l, Tef, 2-109
Bushing, Sleeve, 0.78b 0.86d 0.93l, Bnz, 2-93
Bushing, Sleeve, 0.88b 1.00d 0.75l, Bnz, 2-101
Bushing, Sleeve, 1.00b 1.13d 1.50l, Fgl, 3-11
Button, Cntrl, Horn, 2-17
Bypass Valve Kit, Pump, Repair,, 4-27

C

Cable, Battery, 02ga 48.0l Red .41ring, 2-89
Cable, Battery, 02ga 60.0l Blk .41ring, 2-89
Cable, Battery, 2ga, 60l, Red, 2-89
Cable, Battery, 2ga, 62l, Blk, 2-89
Cable, Glv .06d 012.0l .26eye /.26eye, 3-67, 3-69
Cable, Glv .09d 016.5l .38eye /.38eye, 2-19
Cable, Glv .13d 015.8l .50eye /.50eye, 2-129, 2-133
Cable, Push / Pull, 063.0l 4.0, .31-24, 2-95
Cable, Push / Pull, 098.0l .25-28/.25-28, 2-97
Cam, 2-123
Cam, Centering, Pintle, 2-99
Cam, Front, 3-9
Cam, Plt, Brake [Nickel], 2-93
Cam, Rear, 2-123
Cam, Sensor, Wheel [Mit 2.0/2.4l], 6-25
Camshaft, 5-11
Camshaft Assy, 6-9
Cap Assy, Tank, Drain, 2-143, 4-3
Cap Screw, 4-8
Cap Screw Cl, 4-9
Cap, Arm, Lift, 2-107
Cap, Breather, Hyd, 2.4 Ds, 1-1, 2-173
Cap, End, Valve, Steering, 4-25
Cap, Filler, Oil, W/ Org, 5-3
Cap, Fuel, Tank, 2-85
Cap, Hub, Dust 2.57d 0.77l, 2-93
Cap, Oil, Filler, 6-4
Cap, Radiator, 14psi [Stant Ao-2516], 2-55
Cap, Radiator, 14Psi [Stant], 2-59, 2-79
Cap, Rubber, 5/8id [Mit 2.0/2.4l], 6-22
Cap, Seal, 6-3
Cap, Spring, Valve, 5-3
Cap, Tank, 3-5
Cap, Tank, Fuel, 2.3neck 2.6d, 2-83
Cap, Vinyl, 57mmid X 23mml, 2-113, 2-115
Capacitor, Plug [4700uf, 25v], 3-46
Cartridge, Psi Cntrl, Valve, Hyd, 4-13, 4-15, 4-19, 4-21
Caster, Pivot, 2-125
Catch, Latch, Tank Cover, 2-135, 2-136
Chain, Str, 4/0, 08 Link, 2-121
Channel Wldt, Pivot, 3-11
Channel, Shield, Muffler, 2-51
Channel, Shield, Muffler [M20/T20 2007], 2-53, 2-77
Channel, Upper, Tower, Lift, 2-7
Chech Valve Kit, Pump, Repair,, 4-27
Circuitbreaker, 02.0a, Resetable, 3-37
Circuitbreaker, 2.0a, Resetable, 3-37
Clamp Wldt, Front, 2-123
Clamp Wldt, Rear, 2-123
Clamp, 0.75d [Mit], 6-25
Clamp, 1/4 Hole [Mit #20], 6-25
Clamp, 3/8id [Mit Olive Green], 6-15
Clamp, Cable, Nyl, 0.62D, Nat, 3-57
Clamp, Cable, Ss, 0.50d X 0.50w [Insul], 4-29
Clamp, Cable, Ss, 1.12d X 0.38w, 1h, 2-141
Clamp, Cable, Ss, 2.50d X 1.00w, 1h, 2-9
Clamp, Cable, Ss, 2.50d X 1.00w, 1hole, 2-149
Clamp, Cable, Stl, 0.25D X 0.56W, 1Hole, 3-49, 3-51
Clamp, Cable, Stl, 0.44d X 0.62w, 1h, 2-171
Clamp, Cable, Stl, 0.69d X 0.62w, 1h, 2-55, 2-97
Clamp, Cable, Stl, 0.69d X 0.62w, 1hole, 2-37, 2-87
Clamp, Cable, Stl, 1.00d X 0.75w, 1hole, 2-73, 2-87
Clamp, Cable, Stl, 1.25d X 1.00w, 1hole, 2-61
Clamp, Cable, Stl, 1.50d X 1.00w, 1h, 2-9, 2-55, 2-89, 2-171, 3-21
Clamp, Cable, Stl, 1.50d X 1.00w, 1hole, 2-7, 2-81
Clamp, Cable, Stl, 2.00d X 0.75w, 1 Hole, 2-83
Clamp, Cable, Stl, 2.00d X 0.75w, 1hole, 2-85
Clamp, Hose, 1.0, 2-37, 2-39
Clamp, Hose, 1.75 [Pcv], 5-3

Clamp, Hose, Plstc .351-.394 Id, 3-21
Clamp, Hose, Spring Stl, 0.58d X 0.31w, 2-67, 2-69
Clamp, Hose, Spring Stl, 0.86d X 0.38w, 2-41, 2-43, 2-45, 2-47
Clamp, Hose, Spring, 0.62d, 2-37, 2-39, 6-22, 6-29
Clamp, Hose, Spring, 0.75d, 2-37, 2-39
Clamp, Hose, Wir, .52 - .56, Yel, 4-29
Clamp, Hose, Wir, .63 - .66, Blk, 4-29
Clamp, Hose, Wormdrive, 0.25-0.62d, .31w, 2-25, 2-27, 2-32, 2-37, 2-55, 2-56, 2-61, 2-81, 3-3, 3-5, 3-29, 3-39
Clamp, Hose, Wormdrive, 0.31-0.88d, .31w, 2-27, 2-37, 2-71, 2-73, 2-83, 2-85, 2-89, 3-13, 3-19, 3-23, 3-25, 3-29, 3-31, 3-33, 3-39, 3-41, 3-43, 3-63
Clamp, Hose, Wormdrive, 0.56-1.06d, .56w, 2-25, 2-27, 2-29, 2-32, 2-37, 2-39, 2-141, 3-3, 3-5, 3-13, 3-23, 3-25, 3-31, 3-33, 3-41, 3-43, 3-63
Clamp, Hose, Wormdrive, 1.25-2.00D, .50W, 2-51, 2-53, 2-55, 2-61, 2-81
Clamp, Hose, Wormdrive, 1.56-2.50d, .50w, 2-55, 2-61, 2-81
Clamp, Hose, Wormdrive, 1.81-2.75d, .50w, 2-41, 2-43, 2-45, 2-47, 2-71, 2-73
Clamp, Hose, Wormdrive, 2.50-3.50d, .50w, 2-123, 2-139, 2-145
Clamp, Hose, Wormdrive, 3.56-4.50D, .50W, 2-139, 2-145, 2-147, 2-151
Clamp, Hose, Wormdrive, 3.75-4.62d, .62w, 2-147
Clamp, Hyd, 0.50d, 2-113, 2-115
Clamp, Mtg, Fltr, Air, 2-41, 2-43, 2-45, 2-47, 2-71, 2-73
Clamp, Muffler, 1.62d, 2-51, 2-53
Clamp, Spring, 1.50, 2-43, 2-47
Clamp, Tension [Mit #29], 6-29
Clevis, Adj, 0.25 Pin, 0.25-28 Rh, Pl, 2-95
Clevis, Adj, 0.25pin, 0.25-28left Pl, 2-95
Clevis, Adj, 0.31pin, 0.31-24, 2-95
Clip, .250h, Plstc [Pine-Tree], 2-21
Clip, Grip, Finger, .875-1.25, 3-63
Clip, Grip, Finger, 0.88-1.25d, 3-37
Clip, Grip, Finger, 1.00-1.88d White,Vyl, 3-59, 3-61
Clip, Keeper, Open, 2-55, 2-59, 2-79
Coil, Ignition, 5-12
Coil, Ignition [Mit 2.0/2.4l], 6-19
Column, Pump, Water, 4-3
Column, Steering, 09.9L 0.86D 36Tooth, 2-17
Complete Pump Kit, Pump, Repair,, 4-27
Concept, Latch, 3-69
Connector, Fem, 02cav, Mp280 Sealed, 4-27
Connector, Fuel, E90, Qf, 2-83
Connector, Fuel, Qf, 2-83, 2-85
Contact Kit, W/ Brush [En], 2-17
Control Box Assy Kit, Replmt, Telem [CAN], 3-57
Control Box Assy Kit, Replmt, Telem [USA], 3-57
Controller Kit, Replmt [Ec-H20], 4-29
Converter, Ele, 12-36 Vdc, 3-37
Cooler, Hyd, 25gpm 325btu Of12 13x12x2, 2-171
Coupler, Pump, 4-7
Coupling, Drive, 13t, 2-23
Coupling, Flywheel [Mit20/24m], 6-18
Coupling, Nozzle, Spray, 3-63
Cover, 6-5
Cover Assy, Front, Upper [T-Belt], 6-7
Cover Assy, Rocker, 6-4
Cover Kit, Soltn Tank, Rh [M20 & T20], 2-135
Cover Kit, Switch, Float, Repair, 2-143
Cover Kit, Tank, Soltn, Lh, Replmt, 2-136
Cover Kit, Tank, Soltn, Lh, Replmt, Ce (Japan and CE Only), 2-136
Cover Kit, Tank, Soltn, Rh, Replmt, Ce (Japan and CE Only), 2-135
Cover Wldt [FaST], 3-21
Cover Wldt, Power Supply, 3-37
Cover, Backrest, 4-31
Cover, Belt, Timing, Lower Front, 5-11
Cover, Belt, Timing, Upper Front, 5-11
Cover, Cushion, 4-31
Cover, Dust [Mit 2.0l], 6-18
Cover, End, 4-7
Cover, Fuse, Block, 2-89
Cover, Hose, 2-37, 2-39
Cover, Hppr, 2-105
Cover, Hsng, Camshaft, 5-3, 5-11
Cover, Hsng, Flywheel (Replaced By 9006895), 2-23
Cover, Lower, 2-15, 2-21
Cover, Lower, Front [T-Belt], 6-7
Cover, Pump, Oil, 5-7
Cover, Rear [T-Belt], 6-7
Cover, Tank, 2-143
Cover, Tank, Recvy, Trimmed, 2-143
Cover, Tank, Soltn, Lh, Trimmed, 2-136
Cover, Tank, Soltn, Lh, Trimmed, Ce (Japan and CE Only), 2-136
Cover, Tank, Soltn, Rh, Trimmed, 2-135
Cover, Tank, Soltn, Rh, Trimmed, Ce (Japan and CE Only), 2-135
Cover, Timing, Gear [Mit 2.0/2.4l], 6-9
Cover, Trimmed, 3-37
Crank Kit, Pump, F/79323, Replmt, 4-26
Crankshaft, 5-5
Crankshaft Assy, 6-10
Crossmember Wldt [M20], 2-125
Cup Holder, Rwk, 2-13
Cylinder Assy, Head, Bolt, 6-5
Cylinder, Hyd, 1.5b 07.8l 02.75strk 2500, 2-109, 2-111, 3-11
Cylinder, Hyd, 1.5b 07.8l 02.80strk 2500, 2-117, 2-121, 2-129, 2-133, 3-11
Cylinder, Hyd, 2.0B 24.1L 15.00Strk 3000, 2-101
Cylinder, Hyd, 2.0b,15.2l,09.00strk,3000, 2-91

D

Detergent Pkg, 2 Liter, Sgl [665], 3-21
Detergent, Pkg, 2 Liter, Sgl [665], 3-29
Diaphragm Kit, Pump, Repair,, 4-27
Diode, Ele, Plug, 2-89
Dipstick Assy, Guage, 6-3
Dipstick, Guage, Guide, 6-3
Dipstick, Oil, 5-8
Dipstick, Rod, Guage, 6-3
Door Wldt, Brush, 2-113, 2-115
Door Wldt, Brush, Idler, 2-113, 2-115
Door Wldt, Brush, Lh, 2-133
Door Wldt, Brush, Rh, 2-129
Door Wldt, Hppr, 2-109, 2-111
Drain, Water, Joint, 6-3
Drive, 4-8
Drive [Cl], 4-9
Drive, Motor, Hyd, 4-5

E

ec-H2O Kit, Flush, Replmt[M20, M30&T20], 3-39
Elbow, 6-21
Elbow, 1/8m X 1/8f, 90 [Mit], 6-15
Electrode, 5 Plate, High Flow, 4-29
Electrode, Cylindrical, 4-29
Element, Fltr, Air [Dn], 1-1, 2-41, 2-43, 2-45, 2-47, 2-71, 2-73
Element, Fltr, Air, Safety (OPTION), 2-41, 2-43, 2-45, 2-47, 2-71, 2-73
Element, Fltr, Oil, Eng, Spin-On (GM), 1-1, 2-23, 5-8
Element, Fltr, Oil, Spin-On (Mits), 1-1, 2-63, 2-65, 6-21
End Cap, 4-8
End Cap, Motor, Hyd [En], 4-9
Engine [Long Block Gm 1.6l] (See Engine Breakdown), 2-23
Engine, Block, Long [Mits 12mm] (See Engine Breakdown), 2-63, 2-65
Engine, Gas [Mitsubishi] (See Engine Breakdown), 2-63
Engine, LPG [Mitsubishi] (See Engine Breakdown), 2-65
Extinguisher Kit, Fire, Ci [M20 And T20], 3-70
Extinguisher, Fire, 2.5 Lb Dry, 3-70

F

Fan Kit, Scrub, Replmt [M20/T20], 2-147
Fan Wldt, Vac, Inlet, 2-151
Fan, Cooling, 14.1d, 6 Blade, 0.5b Taper, 2-75, 3-69
Fan, Cooling, 15.5d, 6 Blade, .5b Taper, 2-49
Fan, Cooling, 16.0d, 6 Blade, 2-49

Fan, Cooling, Pusher, 15.5D [2007], 2-49
FaST Kit, Ci [inj Rebld, M30/M20 III], 4-32
FaST Kit, Ci, Injector Filters[FaST Ii+], 4-32
FaST Kit, Injector [M20/T20/M30 FaST III] (See Breakdowns), 3-29
FaST Kit, Injector [M20/T20/m30 FaST III}, 4-32
FaST Kit, Seal, injector, Ci [FaST III], 4-32
Filter Assy, Air, 2-41, 2-43, 2-45, 2-47, 2-71, 2-73
Filter Assy, Air, Mold, Ure, 3-21
Filter Assy, Hyd, 10mic, 1-1, 2-173
Filter Kit, Fuelock, Lpg, 1-1, 2-31, 2-37, 2-39, 6-29
Filter, Foam, Rbr, 1.20d, 1.0l, 3-23, 3-25
Filter, Fuel [Gm 1.6l/3.0l], 1-1, 2-83, 2-85
Filter, In- Line, Pf06/Pf06 080mesh 02.6l, 3-29, 3-39
Filter, In- Line, Pf06/Pf06, 80 Mesh, 3-19
Filter, Panl, Syn, 4.2 X 20.0 X 30.0, 1-1, 2-105
Filter, Screen, 50 Mesh .59d .8l Ss, 3-19
Filter, Soltn, 020mesh, Pm12 3.2d 08.0l, 3-5
Filter, Soltn, 20mesh, Pm12 3.1d 02.6l, 1-1, 2-136
Fitting Assy, Orifice, 0.070b, Pf04/Pf04, 3-19
Fitting Assy, Orifice, 0.093b, Pf04/Pf04, 3-19
Fitting Assy, Qdc, Pf04, 3-39
Fitting Kit [Epr], 2-37, 2-39
Fitting Kit, Hose, Garden, 3-3
Fitting, 1/2 Mpt X 5/8bh 90deg [Mit], 6-23
Fitting, 1/2 X 5/8 Hose,Plastic[Mit], 6-29
Fitting, 1/4mpt X 1/4mpt, 90deg[Mit], 6-29
Fitting, 1/8 Mpt X 3/8 Hb [Mit], 6-15
Fitting, 37deg [Mit], 6-7
Fitting, Adapter, Orifice, Pf06/Pm06, 2-25, 2-27, 2-29, 2-39
Fitting, Barb, 3/4" [Epr], 6-30
Fitting, Brs, Breather [02mp], 2-107
Fitting, Brs, E45, Pf02/Pm02, 2-23
Fitting, Brs, E90, Bm06/Pm04, 2-69
Fitting, Brs, E90, Bm08/Pm04, 3-19
Fitting, Brs, E90, Cf03/Pf02, 3-21
Fitting, Brs, E90, Em05/Pm04, 2-83, 2-85
Fitting, Brs, E90, Em10/Pm06, 2-25, 2-27, 2-29, 2-32, 2-37, 2-39
Fitting, Brs, E90, Pf04/Pm04, 2-37, 2-83, 2-87
Fitting, Brs, E90, Pm02/Bm03, 2-107, 3-5
Fitting, Brs, Qdc, Bm12/Qf08, 3-3
Fitting, Brs, Qdc, Pf04, Lpg Fem, 2-87
Fitting, Brs, Qdc, Pf08 [Parker Bh3f], 3-3
Fitting, Brs, Snubber, Pm02/Pf02, 3-39
Fitting, Brs, Str, Bm03/Pm02, 2-107
Fitting, Brs, Str, Bm04/Pm02, 3-21
Fitting, Brs, Str, Bm05/Pm04, 2-83
Fitting, Brs, Str, Bm06/Pm02, 2-67
Fitting, Brs, Str, Bm06/Pm05, 2-27, 2-37
Fitting, Brs, Str, Bm06/Pm06, 2-67, 2-69
Fitting, Brs, Str, Bm08/Pm04, 3-19
Fitting, Brs, Str, Em10/Pm06, 2-29, 2-39
Fitting, Brs, Str, Pf02/Pm02 [Bspt], 2-67
Fitting, Brs, Str, Pf02/Pm04, 3-19
Fitting, Brs, Str, Pf02/Pm06, 3-39
Fitting, Brs, Str, Pf04/Pf04, Bh, 2-87
Fitting, Brs, Str, Pf04/Pm02, 2-25, 2-27, 2-32, 2-37
Fitting, Brs, Str, Pf06/Pf06 Bh, 3-63
Fitting, Brs, Str, Pf06/Pm04, 2-29, 2-39, 2-67, 2-69
Fitting, Brs, Str, Pf06/Pm12, 3-63
Fitting, Brs, Str, Pm04/Pm04, 2-83, 3-19
Fitting, Brs, Str, Pm08/Garden Hose, 3-63
Fitting, Brs, Tee, Pf04/Pf04/Pf04, 3-19
Fitting, Brs, Tee, Pf04/Pf04/Pm04, Run, 2-87, 3-29
Fitting, Cap, 2-31
Fitting, Draincock, E90, .25npt, 2-25, 2-27, 2-32, 2-37, 2-55, 2-61, 2-81
Fitting, E, Gr, 4-3
Fitting, E70, 2-31
Fitting, E90, 2-31, 2-35, 6-22
Fitting, E90, M14 X .56, 2-23
Fitting, End, Hose, 2-23
Fitting, Fltr, Oil, 5-8
Fitting, Fuel [Mixer E100Lp 2010], 2-35
Fitting, Fuel, Str, 0.38- 24 [07 Eng], 2-85
Fitting, Fuel, Str, 0.56- 18 [07 Eng], 2-85
Fitting, Grease, Str Pm04 .47l, 2-101, 2-109, 2-111, 2-117, 2-125
Fitting, Grease, Str Pm04 .63l, 2-91
Fitting, Hose, Vacuum, .25, 2-31
Fitting, Hyd, Cap, Jf04, 2-171
Fitting, Hyd, Cap, Jf08, 2-171, 3-15
Fitting, Hyd, E45, Jf08/Jm08, 2-177
Fitting, Hyd, E45, Jf10/Jm10, 2-159
Fitting, Hyd, E45, Jm04/Om04, 3-15
Fitting, Hyd, E45, Jm04/Om06, 2-91, 2-101
Fitting, Hyd, E45, Jm06/Om04, 2-147
Fitting, Hyd, E45, Jm06/Om06, 2-91, 2-175
Fitting, Hyd, E45, Jm08/Om08, 2-147, 2-175, 2-177, 3-15
Fitting, Hyd, E45, Jm08/Om10, 2-149, 2-169
Fitting, Hyd, E45, Jm10/Om12, 2-91
Fitting, Hyd, E45, Jm12/Om16, 2-173
Fitting, Hyd, E45, Jm20/Om20, 2-173
Fitting, Hyd, E90, Jf04/Jm04, 2-115, 2-175, 3-15
Fitting, Hyd, E90, Jf06/Jm06, 3-15
Fitting, Hyd, E90, Jf08/Jm08, 2-17, 2-171
Fitting, Hyd, E90, Jm04/Om04, 2-109, 2-111, 2-121, 2-129, 2-133, 2-175, 2-177, 3-11
Fitting, Hyd, E90, Jm04/Om06, 2-101
Fitting, Hyd, E90, Jm04/Pm02, 2-173
Fitting, Hyd, E90, Jm06/Om04, 2-117, 2-149, 2-151, 3-11
Fitting, Hyd, E90, Jm06/Om06, 2-17, 2-175, 2-177, 3-15
Fitting, Hyd, E90, Jm06/Om06, L, 2-175
Fitting, Hyd, E90, Jm06/Om06, Long, 2-177
Fitting, Hyd, E90, Jm06/Om08, 2-169
Fitting, Hyd, E90, Jm08/Om08, 2-113, 2-115, 2-151, 2-169, 2-175, 3-15
Fitting, Hyd, E90, Jm08/Om08, L, 2-175
Fitting, Hyd, E90, Jm08/Om08, Long, 2-177
Fitting, Hyd, E90, Jm08/Om10, 3-7, 3-9
Fitting, Hyd, E90, Jm10/Om12, 2-169
Fitting, Hyd, E90, Jm12/Om12, 2-171
Fitting, Hyd, E90, Jm12/Om12, L, 2-171
Fitting, Hyd, E90, Om04/Qm04, 2-175, 2-177, 3-15
Fitting, Hyd, E90, Spcl, 2-37, 2-39
Fitting, Hyd, Plug, Om04, 2-177, 4-11, 4-19, 4-21, 4-23
Fitting, Hyd, Plug, Om06, 2-173, 2-177
Fitting, Hyd, Plug, Om08, 4-7, 4-19
Fitting, Hyd, Plug, Om10, 2-173
Fitting, Hyd, Plug, Pm06, 2-29, 2-39
Fitting, Hyd, Rst, Jf04/Jm04, .028, 2-101
Fitting, Hyd, Rst, Spcl, 2-129, 2-133
Fitting, Hyd, Str, Jf04/Qm04, 2-175, 3-15
Fitting, Hyd, Str, Jf06/Jm04, 2-171
Fitting, Hyd, Str, Jm04/Om04, 2-113, 2-115, 2-175, 2-177, 3-15
Fitting, Hyd, Str, Jm04/Om06, 3-15
Fitting, Hyd, Str, Jm06/Om04, 2-151
Fitting, Hyd, Str, Jm06/Om06, 2-17, 2-173, 3-15, 3-17
Fitting, Hyd, Str, Jm06/Om06, L, 2-17
Fitting, Hyd, Str, Jm06/Om06, Long, 2-177, 3-17
Fitting, Hyd, Str, Jm08/Om06, 2-17
Fitting, Hyd, Str, Jm08/Om08, 2-151, 2-169, 2-173, 3-15
Fitting, Hyd, Str, Jm08/Om10, 2-149, 3-7
Fitting, Hyd, Str, Jm10/Om10, 2-175
Fitting, Hyd, Str, Jm10/Om10, Long, 2-177
Fitting, Hyd, Str, Jm10/Om12, 2-91
Fitting, Hyd, Str, Jm20/Om16, 2-169
Fitting, Hyd, Str, Om04/Qm04, 2-175, 3-15
Fitting, Hyd, Str, Pf02/Pm04, 2-87
Fitting, Hyd, Tee, Jf06/Jm06/Jm06, Run, 2-151
Fitting, Hyd, Tee, Jf08/Jm08/Jm08, Br, 2-149
Fitting, Hyd, Tee, Jm06/Jm06/Om06, Run, 2-175, 3-17
Fitting, Hyd, Tee, Jm08/Jm08/Om08, Br, 2-147, 2-175, 2-177
Fitting, Nipple, .25mal, 2-37, 2-39
Fitting, Nipple, .25npt, Brs, 2-31
Fitting, Nyl, Qdc, E90, Bm08/ Qm10, 3-29, 3-39
Fitting, NylY, Qdc, E90, Bm06/ Qm10, 3-29
Fitting, Pipe, Bshg, M18 X 1.5, 2-23
Fitting, Pipe, E45, Spcl, 2-87
Fitting, Pipe, E90, Pf02/Pm02, 3-21
Fitting, Pipe, Plug, 2-23
Fitting, Pipe, Plug, Metric, M18,Soc, 2-23, 2-51, 2-53

Fitting, Pipe, Plug, Pm02, Sq Head, 2-85
Fitting, Pipe, Plug, Pm08, Sq Head, 2-141
Fitting, Pipe, Str, Pm04/Sf04, 2-87
Fitting, Plstc, Body, Spray, Pf04, 3-19
Fitting, Plstc, Cap, Pf12 Hex, 2-141
Fitting, Plstc, Cap, Spray, Pf04, 3-19
Fitting, Plstc, E90, Bm05/Bm05, Nyl, 3-39
Fitting, Plstc, E90, Bm06/Bm06, 3-5, 4-29
Fitting, Plstc, E90, Bm06/Pm04, Nyl, 3-29
Fitting, Plstc, E90, Bm06/Pm12, Nyl, 3-3
Fitting, Plstc, E90, Bm08/Bm08, 3-39
Fitting, Plstc, E90, Bm08/Pf08s, Swivel, 3-19, 3-63
Fitting, Plstc, E90, Bm08/Pm04, 3-39
Fitting, Plstc, E90, Bm08/Pm06, 3-39, 3-63
Fitting, Plstc, E90, Bm08/Pm12, Nyl, 3-19, 3-23, 3-25, 3-29, 3-39
Fitting, Plstc, E90, Bm10/Pm08, 3-3
Fitting, Plstc, E90, Bm10/Pm12, 3-3, 3-29, 3-39
Fitting, Plstc, E90, Bm12/Pf12, 3-5
Fitting, Plstc, E90, Bm12/Pm08, 3-3
Fitting, Plstc, E90, Bm12/Pm12, 3-3, 3-5, 3-19, 3-29, 3-39
Fitting, Plstc, E90, Pf Bm [Es Pump], 4-3
Fitting, Plstc, E90, Pf12/Pm12, 2-136
Fitting, Plstc, Pf12/Pf12, Bh, 2-136, 3-3
Fitting, Plstc, Pipe, Cap, Pf04, 3-21, 3-29, 4-29
Fitting, Plstc, Rst, .50od /.13id, 3-25
Fitting, Plstc, Str, Bm04, Cplg, Fem, 3-21, 3-29
Fitting, Plstc, Str, Bm04/Bm08, 3-39
Fitting, Plstc, Str, Bm04/Pm04, 3-39
Fitting, Plstc, Str, Bm05/Pm04, 3-39
Fitting, Plstc, Str, Bm06/Bm08, 3-43
Fitting, Plstc, Str, Bm06/Pm04, 3-29, 4-29
Fitting, Plstc, Str, Bm06/Pm06, 3-29
Fitting, Plstc, Str, Bm08/Pf08s, Swivel, 3-63
Fitting, Plstc, Str, Bm08/Pm06, 3-19
Fitting, Plstc, Str, Bm08/Pm12, 3-23, 3-25
Fitting, Plstc, Str, Bm10/Bm10, 2-41, 2-45, 2-141
Fitting, Plstc, Str, Bm10/Bm12, 2-141
Fitting, Plstc, Str, Bm10/Pm12, 2-141
Fitting, Plstc, Str, Bm12/Bm12, 2-141
Fitting, Plstc, Str, Bm12/Pm08, Nyl, 3-3, 4-3
Fitting, Plstc, Str, Bm12/Pm12, 2-141
Fitting, Plstc, Str, Pf06/Qm10, Pvc, 3-39
Fitting, Plstc, Str, Pm02/Bm05, 4-29
Fitting, Plstc, Str, Pm04, Cplg, Mal, 3-21, 3-29
Fitting, Plstc, Str, Pm04/Pm06, Nyl, 3-39
Fitting, Plstc, Str, Pm08/Pm08, 3-3
Fitting, Plstc, Str, Pm12/Pm12 1.60l, 3-3, 3-19, 3-29, 3-39
Fitting, Plstc, Tee, Bm04/Bm04/Bm04, 3-29
Fitting, Plstc, Tee, Bm04/Bm08/Bm08, Br, 3-19
Fitting, Plstc, Tee, Bm06/Pm02/Bm06, 4-29
Fitting, Plstc, Tee, Bm08/Bm08/Bm08, 3-19
Fitting, Plstc, Tee, Bm08/Bm10/Bm10, Br, 3-31, 3-33, 3-41, 3-43, 3-63
Fitting, Plstc, Tee, Bm08/Bm12/Bm12, Br, 3-23, 3-25, 3-31, 3-33, 3-41, 3-43, 3-63
Fitting, Plstc, Tee, Bm10/Bm10/Bm10, 2-29, 2-39
Fitting, Plstc, Tee, Bm10/Bm10/Bm10, Nyl, 3-13
Fitting, Plstc, Tee, Bm12/Bm12/Bm12, 2-141, 3-13
Fitting, Plstc, Tee, Pf08/Pf08/Pf08, 3-3
Fitting, Plstc, Tee, Pf12/Pf12/Pf12, 3-3, 3-19, 3-29, 3-39
Fitting, Plstc, Y, Bm08/Bm08/Bm08, Nyl, 3-25, 3-29, 3-33, 3-43
Fitting, Plug, 2-23
Fitting, Plug, M16, Intake Manifold, 2-27, 2-29, 2-35
Fitting, Plug, Org, #6, Valve [Cec], 4-11, 4-13, 4-15, 4-17, 4-19, 4-21, 4-23
Fitting, Str, 2-31
Fitting, Str, .19brb X .12mpt, 2-25
Fitting, Str, 10-10 Orb, 37fi [Mit], 6-21
Fitting, Str, E90, .25npt, 2-31
Fitting, Vacuum [M16-15-6h], 2-25, 2-27, 2-29, 2-35
Flange Mounting, 4-8
Flange, Motor, Hyd [En], 4-9
Flange, Sprocket, Cshft, 6-11
Flap, Battery, 2-13
Flapper, Valve, Pump, Water, 4-3
Flywheel, 5-5
Flywheel, Flatface [Mit 20/24m], 6-18
Frame Wldt, Lift, Hppr, 2-101
Frame Wldt, Main, Replmt [m20 & T20], 2-7
Frame Wldt, Screen, Rad, 3-69
Frame Wldt, Sqge, Lh, 2-131
Frame Wldt, Sqge, Rh, 2-127
Frame Wldt, Sqge, Side Brush, 3-7
Fuelline, .31d Str/Str, Plstc, 2-83, 2-85
Fuelline, .31d Str/Str, Plstc [Mit 2013], 2-85
Fuelline, .31d Str/Str,Plstc[M20/T20 07], 2-85
Fuse, 015a, 2-89
Fuse, 10 Amp, 2-238
Fuse, 15 Amp, [Min-15], 2-238
Fuse, 20 Amp, [Min-20], 2-238
Fuse, 5 Amp, [Min-5], 2-238
Fuse, 50amp, 2-238
Fuse, 60 Amp, 2-238

G

Gasket, 2-31, 6-5
Gasket Kit, Repair, Gas [Gm1.6l 2007], 2-27, 2-29
Gasket Kit, Repair, Lpg [Gm1.6l 2007], 2-35
Gasket, .25 1.88d 1.0id [Poron], 4-3
Gasket, 2.00, 07.87w 10.24l, Adh, 2-149
Gasket, 3.23id 3.63od .16th, Ure, 2-143
Gasket, 4.05id 5.29od .19 [Buna], 2-143, 4-3
Gasket, Body, Throttle [1.6l], 2-25, 2-27, 2-29
Gasket, Case, Front, 6-12
Gasket, Cover, Fuse Block, 2-89
Gasket, Cover, Hsng, Camshaft, 5-3
Gasket, Cover, Recvy Tank, 2-143
Gasket, Cover, Rocker, 6-4
Gasket, Cylinder, Head, 6-5
Gasket, Exhaust, 2hole, 3.4bc, 2-51, 2-53, 2-77
Gasket, Flng, Pipe, Exhaust, 2-51, 2-53
Gasket, Foam, .50, 14.76id 16.54od, Adh, 2-149
Gasket, Head, Cyl, 5-3
Gasket, Hppr, Transition, 2-151
Gasket, Manifold, Exh [Mit], 6-16
Gasket, Manifold, Exhaust, 5-9, 6-16
Gasket, Manifold, Intake, 2-25, 2-27, 2-29, 2-31, 5-9, 6-15
Gasket, Oil, Adapter [Mit 2.0/2.4], 6-21
Gasket, Oil, Filler, Cap, 6-4
Gasket, Outlet, 6-22
Gasket, Pan, Oil, 5-8
Gasket, Plt, Hose, Vacuum, 2-147
Gasket, Plug, Drain, Oil, 6-7
Gasket, Plug, Relief Valve,Oil Press, 2-23, 5-7
Gasket, Pump, Oil, 5-7
Gasket, Pump, Water, 6-13
Gasket, Screen, 6-7
Gasket, Sender, Fuel, 2-85
Gasket, Sqge, 1-1, 2-123
Gasket, Throttle [Mit 40mm], 6-27, 6-28
Gasket, Tube [Pcv], 5-3
Gasket, Water Supply [Mit 2.0/2.4l], 6-23
Gasspring, 180lb, 03.0strk, 2-15
Gauge, Sensing, Level, 2-173
Gear, Drive, Oil Pump, 5-7
Gear, Ring, Drive, Oil Pump, 5-7
Gear, Ring, Starter, 5-5
Geroler, Motor, Hyd, 4-5
Gerotor Set, 4-8
Gerotor Set [Cl], 4-9
Grill Wldt, Front, 2-19
Grill, Eng, 2-21
Grill, Side, 2-15
Grip, Handle, 2-139, 2-145
Grommet, Blind, 4-29
Grommet, Pye, 0.37id, F/1.5h, .13 Matl, 3-5
Grommet, Rbr, 0.20id, F/0.4h, .12 Matl, 2-25, 2-31
Grommet, Rbr, 0.38id, F/0.5H, .12 Matl, 3-57
Grommet, Rbr, 0.50id, F/0.8h, .12 Matl, 3-52, 3-53

Grommet, Rbr, 0.62id, F/0.9h, .06 Matl, 2-107, 3-37
Grommet, Rbr, 0.62id, F/0.9h, .12 Matl, 3-5
Grommet, Rbr, 1.06id, F/1.4h, .19 Matl, 2-107
Grommet, Rbr, 1.50id, F/1.8h, .19 Matl, 2-107
Grommet, Rbr, 2.13id, F/2.5h, .12 Matl, 3-19, 3-29, 3-39
Guard Kit, Sqge, Ci [M20], 3-67
Guard Wldt, Sqge, 3-67
Guard Wldt, Brush, Side, 3-13
Guard Wldt, Pntd [M20/T20], 3-67
Guard Wldt, Sqge [M20/T20 Lh, M30 Rh], 3-67
Guard Wldt, Sqge [M20/T20 Rh, M30 Lh], 3-67
Guard Wldt, Sqge [M20/T20/M30], 3-67
Guard Wldt, Top, Ohg, 3-55
Guard, Fan, Side, 2-75

H

Handle Wldt, Drain, 2-143
Handle, Valve, Pinch, Lh, 2-145
Handle, Valve, Pinch, Rh, 2-139
Hanger, Engine, 6-15
Harness [FaST, M20 And T20], 3-27
Harness, Eng [1.6l, Gm, E-cntrl], 2-238
Harness, Headlight [M20 And T20], 2-230
Harness, Hppr [M20], 2-233
Harness, Hppr [M20/M30], 2-233
Harness, Hppr, Cover [M20], 2-235
Harness, Injector, Gas [1.6l,Gm,E-cntrl], 2-238
Harness, Injector, Lpg [1.6l,Gm,E-cntrl], 2-238
Harness, Jumper [Deutsch To Mpack], 4-17, 4-23
Harness, Main [M20], 2-229
Harness, Manifold, Gas, 2-85
Harness, Spray, Nozzle, 3-63
Harness, Warning / Backup [M20 & T20], 3-47, 3-49, 3-51
Harness, Warning / Ohg [M20], 3-52, 3-53
Harness, Wire [Ec-H2o, Mako, 2.0l & Dsl], 3-46
Harness, Wire [Ec-H2o], 3-46
Harness, Wire [FaST Gen 2], 3-35
Harness, Wire, Eng, Gas [Mit, 2.0L], 2-238
Harness, Wire, Eng, Gas [Gm 1.6L 10], 2-238
Harness, Wire, Eng, Gas [Gm 1.6L], 2-238
Harness, Wire, Eng, Gas [Mit, 2.0l], 6-25
Harness, Wire, Eng, Lpg [Gm 1.6L 10], 2-238
Harness, Wire, Eng, Lpg [Gm 1.6l], 2-238
Harness, Wire, Eng, Lpg [Mit, 2.Ol], 6-25
Harness, Wire, Eng, Lpg[Mit, 2.0L], 2-238
Harness, Wire, Gas/Lpg [Eng Adapt], 2-239
Harness, Wire, Gas/Lpg [Telemetry], 3-58
Head Assy, Cylinder, 6-5
Head Kit, Cyl [Mitsubishi 2015 12mm], 6-5
Head, Cyl, 5-3
Headlight, 12vdc, 27watt, 2.1a, Oval (Rpl by 1060942), 2-7
Headlight, 12Vdc, Oval, Halogen, 2-7
Hinge Kit, Cover, Tank, Recvy, Replmt, 2-143
Hinge Wldt, Shrd, Lh, 2-21
Hinge Wldt, Shrd, Rh, 2-15
Hinge, .38pin .11 3.5w 06.0l 6/0.38sl, 2-19
Hinge, .50pin .19 4.0w 06.0l 3/0.44sl, 2-129, 2-133
Hopper, Debris, Rm-Hg, Trimmed, 2-103
Horn, 12vdc, Dba [Wolo], 2-89
Hose [Epr To Manifold], 2-37, 2-39
Hose [Mixer To Epr], 2-37
Hose [Pcv], 5-3
Hose Assy, Sqge, 2-143
Hose Assy, Upper, Tap [Mit], 6-29
Hose Assy, W/1cuff, 1.0d 09l 1.0/, 2-103
Hose Assy, W/2cuff, 1.5d 084l [Vacwand], 3-61
Hose Assy, W/2cuff, 1.5d 84l [Vacwand], 3-59
Hose Kit, Coolant, Replmt [Mitsubishi}, 2-81
Hose Kit, Hyd, Propel, Ci [M20/T20], 2-159
Hose, 170mm [Ftv-Ptv], 2-31
Hose, 355mm [Fl-Vrp], 2-31
Hose, 9.5mm X 290mm [Pcv], 2-31
Hose, 9.5mm X 450mm [Pcv], 2-25
Hose, 90x90,Filter, Oil, Remote[Mit], 6-21
Hose, 90xstr,Flter, Oil, Remote[Mit], 6-21
Hose, Afmkt, Coolant Recvy, 05ft, 2-55, 2-61, 2-81
Hose, Afmkt, Pvc, Brd 0.38id 02ft, 3-5
Hose, Afmkt, Pvc, Brd 0.50id 02ft, 3-23
Hose, Afmkt, Pvc, Brd 0.50id 03ft, 3-19
Hose, Afmkt, Pvc, Brd 0.50id 08ft, 3-19, 3-25
Hose, Afmkt, Pvc, Brd 0.62id 08ft, 3-13
Hose, Afmkt, Pvc, Brd 0.62Id, 01Ft, Clr, 3-5
Hose, Afmkt, Pvc, Brd 0.75id 01ft, 3-5
Hose, Afmkt, Pvc, Brd 0.75id 08ft, 2-141, 3-3, 3-13
Hose, Afmkt, PVC, Brd, 0.31Id, 03Ft, Clr, 3-39, 4-29
Hose, Afmkt, Pvc, Brd, 0.38id, 01ft, Clr, 4-29
Hose, Afmkt, Pvc, Brd, 0.38id, 02ft, Clr, 3-43, 4-29
Hose, Afmkt, Pvc, Brd, 0.38id, 03ft, Clr, 3-29
Hose, Afmkt, Pvc, Brd, 0.50Id, 01Ft, Clr, 3-29, 3-39
Hose, Afmkt, Pvc, Brd, 0.50id, 03ft, Clr, 3-33
Hose, Afmkt, Pvc, Brd, 0.50id, 08ft, Clr, 3-31, 3-33, 3-43
Hose, Afmkt, Pvc, Brd, 0.50id, 12ft, Clr, 3-39, 3-41
Hose, Afmkt, Pvc, Brd, 0.62id, 01ft, Clr, 2-141
Hose, Afmkt, Pvc, Brd, 0.62id, 03ft, Clr, 3-33, 3-43
Hose, Afmkt, Pvc, Brd, 0.62id, 08ft, Clr, 2-141, 3-31, 3-41
Hose, Afmkt, Pvc, Brd, 0.75id, 08ft, Clr, 3-31, 3-41, 3-63
Hose, Afmkt, Pvc, Clr 0.25id 03ft, 3-21
Hose, Afmkt, Pvc, Clr 0.50id 08ft, 3-25
Hose, Afmkt, Pvc, Clr, 0.25id, 02ft, 3-29
Hose, Afmkt, Pvc, Clr, 0.25id, 03ft, 3-39
Hose, Afmkt, Pvc, Clr, 0.38id, 01ft, 3-29
Hose, Afmkt, Pvc, Clr, 0.38id, 03ft, 3-29
Hose, Afmkt, Pvc, Clr, 0.50id, 08ft, 3-33
Hose, Afmkt, Pvc, Wir, 0.50id, 03ft, Clr, 3-29
Hose, Afmkt, Rbr, Heater, 0.38id, 03ft, 2-67, 2-69
Hose, Afmkt, Rbr, Heater, 0.62id, 02ft, 2-29
Hose, Afmkt, Rbr, Heater, 0.62id, 08ft, 2-39
Hose, Afmkt, Vacuum, 0.16id, 01ft, 3-5
Hose, Afmkt, Vacuum, 0.16id, 03ft, 2-107
Hose, Balancing, Press, 045mm, 2-31
Hose, Balancing, Press, 680mm, 2-31
Hose, Coolant, Mold, 1.25id To 1.62id, 2-61
Hose, Coolant, Molded [Mit 20/24m], 6-29
Hose, Coolant, Upper, Mold [Mit 2013], 2-81
Hose, Drain, 3.00id X 48.0l, 2-139, 2-145
Hose, Drain, Eng Oil, 2-23
Hose, Drain, Oil [Mit 20/24m], 6-7
Hose, Drain,Overflow,Radiator[1pick=1ft], 2-71, 2-73
Hose, Flex, 4.00d, 24.0l, 2-147
Hose, Flex, Vacuum, 3.5d 32.0l, 2-151
Hose, Fuel [Mixer To Epr, 22.5”L], 2-39
Hose, Fuel, 0.31id [Evap Emission 07], 2-85
Hose, Fuel, .19, 2-25
Hose, Fuel, .38d, Rbr[16”L], 6-15
Hose, Fuel, 0.18id, 29.0l, 2-61, 2-81
Hose, Fuel, 0.31id 12.0l, 2-83
Hose, Fuel, 0.31id 24.0l, 2-83
Hose, Fuel, 0.50id 21.0l, 2-83
Hose, Fuel, 0.50id, 21.0l, 2-85
Hose, Fuel, Molded [Mit 20/24m], 6-29
Hose, Heater, 2-25, 2-27
Hose, Heater, 0.38id, 2-27, 2-37
Hose, Heater, 0.62id, 024.0l, 2-29
Hose, Heater, 0.62id, 038.0l, 2-39
Hose, Heater, E90, 0.62id 07.0 2.0, 2-41, 2-45
Hose, Heater, E90, 0.62id, 24.0 4.0, 3-33, 3-43
Hose, Hyd, 26.0l, 2-23
Hose, Hyd, Med04, Jf04e90/Jf04str, 016.0, 2-165

Hose, Hyd, Med06, Jf06e90/Jf06str, 042.0, 2-161
Hose, Hyd, Med06, Jf06e90l/Jf06str,038.0, 3-17
Hose, Hyd, Med06, Jf06str/Jf06str, 018.0, 2-161
Hose, Hyd, Med06, Jf06str/Jf06str, 022.0, 2-161, 2-163
Hose, Hyd, Med06, Jf06Str/Jf06Str, 042.0, 2-161, 2-163
Hose, Hyd, Med08, Jf08e45/Jf08str, 029.0, 2-165
Hose, Hyd, Med08, Jf08e90/Jf08str, 031.0, 2-161
Hose, Hyd, Med08, Jf08str /Jf08e45, 21.0, 2-161, 2-163
Hose, Hyd, Med08, Jf08str/Jf08str, 022.0, 2-165
Hose, Hyd, Med10, Jf10str/Jf10str, 41.0, 2-161
Hose, Hyd, Med10, Jf10Str/Jf10Str, 036.0, 2-161, 2-163
Hose, Hyd, Med12, Jf12e90/Jf12str, 50.0, 2-161
Hose, Hyd, Med12, Jf12e90/Jf12str, 029.0, 2-161, 2-163
Hose, Hyd, Med12, Jf12str/Jf12str, 052.0, 2-161
Hose, Hyd, Med12, Jf12str/Jf12str, 066.0, 2-161, 2-163
Hose, Hyd, Spcl, Jf04str/Jf04str, 115.0, 2-165
Hose, Hyd, Spcl, Jf04str/Jf04str, 121.0, 2-165, 2-167
Hose, Hyd, Spcl, Jf04str/Jf04str, 127.0, 2-165
Hose, Hyd, Spcl, Jf04str/Jf04str, 133.0, 2-165
Hose, Hyd, Spcl, Jf04str/Jf06str, 125.0, 2-167
Hose, Hyd, Spcl, Jf10e90/Jf10str, 63.0, 2-159
Hose, Hyd, Spcl, Jf10str/Jf10str, 56.5, 2-159
Hose, Hyd, Suc20, Jf20str /Jf20e90, 29.0, 2-161, 2-163
Hose, Hyd, Tc 06, Jf06str /Jf06e45, 56.0, 2-165
Hose, Hyd, Tc04, Jf04e45/Qm06, 026.0, 2-167
Hose, Hyd, Tc04, Jf04e45/Qm06, 028.0, 2-167
Hose, Hyd, Tc04, Jf04e90/Jf04str, 020.0, 2-165
Hose, Hyd, Tc04, Jf04str /Jf04e90, 70.0, 2-165
Hose, Hyd, Tc04, Jf04str /Jf04e90, 88.0, 2-165
Hose, Hyd, Tc04, Jf04str /Jf04str, 20.0, 3-17
Hose, Hyd, Tc04, Jf04str /Jf04str, 39.0, 3-17
Hose, Hyd, Tc04, Jf04str/Jf04str, 096.0, 2-165
Hose, Hyd, Tc06, Jf06e90/Jf06str, 040.0, 2-159
Hose, Hyd, Tc06, Jf06e90/Jf06str, 104.0, 2-159
Hose, Hyd, Tc06, Jf06str /Jf06e45, 54.0, 2-165
Hose, Hyd, Tc06, Jf06str /Jf06e90, 74.0, 3-17
Hose, Hyd, Tc06, Jf06str /Jf06str, 23.0, 3-17
Hose, Hyd, Tc06, Jf06str/Jf06str, 033.0, 3-17
Hose, Hyd, Tc06, Jf06str/Jf06str, 054.0, 2-165
Hose, Hyd, Tc06, Jf06Str/Jf06Str, 062.0, 3-17
Hose, Hyd, Tc06, Jf06str/Jf06str, 086.0, 3-17
Hose, Hyd, Tc08, Jf08e45/Jf08str, 018.0, 2-165
Hose, Hyd, Tc08, Jf08E45/Jf08Str, 026.0, 2-161, 2-163
Hose, Hyd, Tc08, Jf08e45/Jf08str, 26.0, 2-161
Hose, Hyd, Tc08, Jf08e45/Jf08str, 96.0, 2-159
Hose, Hyd, Tc08, Jf08e90/Jf08str, 024.0, 2-161
Hose, Hyd, Tc08, Jf08E90/Jf08Str, 029.0, 2-161
Hose, Hyd, Tc08, Jf08e90/Jf08str, 034.0, 3-17
Hose, Hyd, Tc08, Jf08e90/Jf08str, 046.0, 2-161, 2-163
Hose, Hyd, Tc08, Jf08e90/Jf08str, 056.0, 3-17
Hose, Hyd, Tc08, Jf08e90/Jf08str, 13.0, 2-165
Hose, Hyd, Tc08, Jf08str/Jf08e90, 012.0, 3-15
Hose, Hyd, Tc08, Jf08str/Jf08e90, 031.0, 2-161, 2-163
Hose, Hyd, Tc08, Jf08Str/Jf08Str, 021.0, 2-161, 2-163
Hose, Hyd, Tc08, Jf08str/Jf08str, 024.0, 2-161
Hose, Hyd, Tc08, Jf08str/Jf08str, 031.0, 2-161, 2-163
Hose, Hyd, Tc08, Jf08str/Jf08str, 034.0, 3-17
Hose, Hyd, Tc08, Jf08str/Jf08str, 056.0, 3-17
Hose, Hyd, Tc08, Jf08str/Jf08str, 084.0, 3-17
Hose, Hyd, Tc08, Jf08str/Jf08str, 21.0, 2-161
Hose, Hyd, Tc08, Jf08str/Jf08str, 48.0, 2-165
Hose, Hyd, Tc12, Jf12e90/Jf12str, 044.0, 2-161
Hose, Hyd, Tco4, Jf04Str/Qm06, 028.0, 2-167
Hose, Hyd,Med04, Jf04str/Jf04str, 066.0, 2-159
Hose, Hyd,Tc 04, Jf04str /Jf04e45 , 35.0, 2-167
Hose, Intake, Mold [Epdm Mit 2013], 2-71, 2-73
Hose, Intake, Mold, 2.00id [Epdm], 2-41, 2-43, 2-45, 2-47, 2-71, 2-73
Hose, Intake, Mold, 2.00id, Gas [Epdm], 2-41
Hose, Intake, Mold, 2.00id, Lpg [Epdm], 2-45
Hose, Intake, Mold, 2.0id [Epdm M20/T20], 2-43, 2-47
Hose, Intake, Mold, 2.0id, Gas, 2-43
Hose, Intake, Mold, 2.0id, Lpg, 2-47
Hose, Intake, Mold, 2.0id, Lpg [Gm 2010], 2-47
Hose, Intake, Mold, Gas [Epdm Mit 2013], 2-71
Hose, Intake, Mold, Lpg [Epdm Mit2013], 2-73
Hose, Lpg, Med05, Pm04str/Sm04str, 14.0l, 2-87
Hose, Lpg, Med05, Pm04str/Sm04str, 55.0l, 2-87
Hose, Mold, .62 To .75, 2-31
Hose, Mold, .62 To .75 (Cut in 2), 2-37
Hose, Pvc, Brd, 0.62id 0.88od 09.00l, 3-3
Hose, Pvc, Clr, 0.38id 0.56od 22.00l, 2-25, 2-32, 2-55
Hose, Pvc, Clr, 0.38id 0.56od 48.00l, 3-3, 3-5
Hose, Pvc, Clr, 0.38id 0.56od 022.0l, 2-27, 2-37, 2-61, 2-81
Hose, Pvc, Clr, 0.50id 0.69od 26.00l, 3-13
Hose, Pvc, Clr, 0.50id 0.69od 30.00l, 2-89
Hose, Radiator, Lower, Mold, 2-55, 2-61
Hose, Radiator, Mold, .75Id X .62Id (Cut in two), 2-29
Hose, Radiator, Upper, Mold, 2-55
Hose, Rbr, 2.00id 2.50od 05.0l, 2-41, 2-45
Hose, Rbr, E90 1.25id 1.25id 04.2 03.1, 2-55
Hose, Rbr, E90, 1.25id 1.25id 04.2 03.1, 2-61, 2-81
Hose, Supply, Gas, .25id, 2-37, 2-39
Hose, Vacuum, 0.22id X 15.0l, 2-27, 2-29, 2-35
Hose, Vacuum, 19.0l, 2-123
Hose, Valve, Press Trim, 350mm, 2-31
Hose, Vent, E90, 0.62id[Gm1.6l 2007], 2-43, 2-47
Hose, Water, Coil, 3-63
Housing, 4-7
Housing Assy, Vacfan, Scrbr, 2-147
Housing Assy, Vacfan, Swpr, 2-151
Housing Kit, Drive, Front, Replmt, 2-91
Housing Kit, Pump, Water, 4-3
Housing Wldt, Brush, Drive, 2-113, 2-115
Housing Wldt, Swp, Scb, 2-117

Housing Wldt, Vacfan, Front [528], 2-147
Housing, Bottom, 4-29
Housing, Brg, Motor, Hyd, 4-5
Housing, Camshaft, 5-3, 5-11
Housing, Cplg, Qf / Pm08, 3-39
Housing, Fan, Radial Discharge, Sq Inlet, 2-149
Housing, Flywheel [Mit 2.0l], 6-18
Housing, Motor, Hyd [En], 4-9
Housing, Pump, 2-23
Housing, Sppt, Front Wheel, 2-91
Housing, T-Stat, 2 Holes [Mit], 6-22
Housing, Thermostat, 6-22
Housing, Throttle, 40mm [Bosch], 2-25, 2-27, 2-29, 2-31, 2-35
Housing, Valve, 4-5
Housingl, 4-8
Hsg & Switch Kit, Pump, Repair,, 4-27
Hub Assy, Wheel, 5 Bolt 4.50bc Taper B, 2-91
Hub, Drive, Brush, Disk, 1.00b [6t], 3-7, 3-9
Hub, Drive, Brush, Disk, 3hole 5.8bc, 2-5
Hub, Drive, Brush, Disk, 3hole 5.8bc[6t], 2-5

I

Idler Assy, Brush, Replmt [M20/T20, M30], 2-113, 2-115
Impeller, 11.81d X 0.500b, 2-149
Impeller, 9.00d X 1.40w X 0.376b, 2-151
Impeller, 9.5d, 18 Bl, 2-147
Indicator, Press, 60psi, 2-173
Injector Kit, Fuel, Gas, 2-25
Insert, :Lrg [Venturi, FaST III], 4-32
Insert, Cap, Mount, Es Pump, 4-3
Insert, Cplg, Qm, Bm08, 3-39
Insert, Plt, Cam, Pump, Hyd, 4-7
Instr, Maint, Wall Chart [M20], 3-71
Instr, Motor, Hyd, Repair [En], 4-9
Instr, Repair, Motor, Hyd, Gear, 4-5
Instr, Repair, Pump, 4-7
Instr, Seal Kit, Motor, 4-10
Instr, Valve, Steering, Repair, 4-25
Instr. Repair Info, Motor, 4-8
Insulation, 3-55
Insulation, Acstc, Rnd, 0.8, 02.5d 0.5h, 2-17
Insulation, Flame-Retardant, 0.5, 2-21, 2-83, 2-85
Insulation, Flame-Retardant, 0.50, 2-147
Insulation, Flame-retardant, 0.75-0.88, 2-11, 2-15, 2-147
Insulation, Flame-Retardant, 1.0, 2-15
Insulation, Shrd, Eng, Gusset, 2-21
Insulation, Thermal, Hydraulic Blanket, 2-173
Isolator, 6-25, 6-29
Isolator [Epr], 2-37, 2-39
Isolator, Box, Relay, 2-27, 2-29, 2-35, 2-67, 2-69
Isolator, Mtg, Vaporizer, Rbr, 2-31
Isolator, Rbr, 2-51, 2-53, 2-77
Isolator, Vib, .50d, 2-23, 2-63, 2-65
Isolator, Vib, Bshg, 1.1d 0.6l .4b 0.78h, 2-55, 2-59, 2-79, 2-147, 2-149, 2-151

K

Key, 6-10
Key-Wdruff 0.25 1.00, 4-8
Key, Ignition [Set Of 2], 1-1, 2-13
Key, Motor, Hyd, 4-5
Key, Shaft, Pump, Hyd, 4-7
Key, Sq, 0.12 X 0.12, 0.50l, 2-49, 2-75
Key, Sq, 0.12 X 0.12, 0.75l, 4-10
Key, Sq, 0.12 X 0.12, 1.00l (Included With Motor), 2-147
Key, Sq, 0.25 X 0.25, 1.25l, 2-113, 2-115
Key, Valve Stem, 5-3
Key, Woodruff, 0.25 1.00 [Asa#0808], 4-9
Keychain, Rectangle, Parts & Service, 2-13
Kit, Bellows, Pump, Detgt, 4-26
Kit, Brush, Motor, Ele, 4-3
Kit, Seal, Motor, Hyd, 4-5
Kit, Seal, Motor, Hyd, Gear[Barns], 2-147, 4-10
Kit, Seal, Valve, Hyd [Cec], 4-10
Kit, Valve, Check, Pump, Water, 4-3
Knob Assy, Star, 1.12d 3ear M10, 2-125
Knob, Star, 2.80d 4ear 1.1l .31-18 Pyp, 2-123
Knob, Tee, 2.5x1.0 1.1l 0.38-16 Plstc, 2-17
Knobs, Adjmt, Weight, 4-31

L

Label [User, Attention, ec-H2O], 2-241
Label Kit, Panel, Replmt [M20], 2-13
Label Kit, Panel, Replmt [M20/M30 ec-H20 only], 2-13
Label Set, Brush Indicator & Removal, 2-241
Label Set, Hi Temp, 2-241
Label Set, Info/Hzrd, Swpr / Scrbr, 2-241
Label Set, Info/Hzrd, Swpr / Scrbr, Tj (Japan Only), 2-241
Label, Caution [Apply Parking Brake], 2-241
Label, Caution [Apply Parking Brake] (Japan Only), 2-241
Label, Logo, 05.75L 2Color [ES], 2-241
Label, Logo, 07.95L 2Color [FaST], 2-241
Label, Logo, 12.3L 4Color [ec-H2O], 2-241
Label, Logo, 16.9L 4Color [ec-H2O], 2-241
Label, Model, 2Color [M20], 2-241
Label, Opertnl, Telem [Fcc/Ic], 3-57
Label, Switch, Rocker [M20/M30], 2-13
Lamp Strobe, Amb [12-48 Vdc], 3-51, 3-53
Lamp, 12vdc [Speaker], 2-7
Lamp, Bulb, Flsh, 3-49, 3-52
Lamp, Bulb, Strobe, 3-51, 3-53
Lamp, Flasher, Amb [12-48 Vdc], 3-49, 3-52
Lamp, Halogen [Speaker], 2-7
Latch, 2-15, 2-55, 2-105, 2-107, 2-113, 2-115, 2-135, 2-136, 3-65
Latch Assy, Mtg, Tank, Lpg, W/Nut, 2-87
Latch Kit, Cover, Soltn, Replmt[M20/T20], 2-135, 2-136
Latch, Cover, 2-136
Latch, Door [Southco 91-562-07], 2-21, 2-127, 2-131
Latch, Hook, 2-129, 2-133
Lens, Blue, Option, F/ Strobe / Flsh Light, 3-49, 3-51, 3-52, 3-53
Lens, Lamp, Amb, Strobe/Flasher, 3-49, 3-51, 3-52, 3-53
Lens, Red, Option, F/ Strobe / Flsh Light, 3-49, 3-51, 3-52, 3-53
Light Kit, Flsh, Ci [M20 And T20], 3-49
Light Kit, Flsh, W/Ohg, Ci[M20 And T20], 3-52
Light Kit, Strobe, Ci [M20 And T20], 3-51
Light Kit, Strobe, W/Ohg, Ci [M20 And T20], 3-53
Light, Led, .312D, 2 Volt [Tri-Color] (ec-H20 only), 2-13
Light, Panl, 14vdc, , 1.1 X 1.0, 2-13
Light, Tail, 12vdc, 2-107
Link Assy, Rod-End, M12, 2-121
Lock-Off, 12v, Lpg [Mit], 6-29
Lock, Secondary, 2cav, Mp280 Sealed, 4-27
Loom, Convoluted, Split 5/8 [Mit], 6-15

M

Magnet, Drive Brush, 2-87
Maint Kit, 400hr [M20/T20/M30 Lpg 2010], 1-1
Maint Kit, 800hr [M20/T20/M30 Lpg 2010], 1-1
Maint Kit, Gas, 400hr[M20/T20], 1-1
Maint Kit, Gas, 800hr[M20/T20], 1-1
Maint Kit, Lpg, 400hr[M20/T20], 1-1
Maint Kit, Lpg, 800hr[M20/T20], 1-1
Manifold, Bar, Spray, 37.5inch, 2-141
Manifold, Exhaust, 5-9
Manifold, Exhaust [Mit 2.0/2.4l], 6-16
Manifold, Gas, Relief, Valve, 2-85
Manifold, Intake [1.6l], 2-25, 2-27, 2-29, 2-31, 2-35
Manifold, Intake [Mit 20/24m Tilt], 6-15
Manifold, Water, 3-39
Manual, Eng, Cd-Rom [Tier Ii,Gm1.6l], 3-71
Manual, Oprtr [M20 Gas/Lpg En], 3-71
Manual, Oprtr [M20 Gas/Lpg, Es, Na], 3-71
Manual, Oprtr [M20 Gas/Lpg, Fr, Na], 3-71
Manual, Parts [M20 Gas/Lpg En], 3-71
Manual, Service [M20 En], 3-71
Manual, Service, Cd-Rom [Mit2.0l], 3-71
Manual, Service, Eng [Gm1.6l], 3-71

Manual, Service, Eng[Gm1.6l Em Cert], 3-71
Mat, Floor, 2-9
Media, Cd-Rom, Training [ec-H2O Tennant], 3-71
Mirror, Convex, 0.50D, 3-55
Mixer , Lpg, 2-35, 6-30
Mixer, Lpg [Gm 1.6l], 2-31
Mixer, W/70deg Ftg, 2-35
Module Kit, Replmt [Ec-H20], 4-29
Module Kit, Replmt [Ec-H20] (See Breakdowns), 3-37
Module, Ecu, Gas [Gm 1.6l], 2-25
Module, Ecu, Gas [Gm1.6l 2010], 2-29
Module, Ecu, Gas [Gm1.6l 2700], 2-27
Module, Ecu, Gas [Mit 2.0l 2013], 6-25
Module, Ecu, Lpg [Gm 1.6l], 2-31
Module, Ecu, Lpg [Gm1.6l 2010], 2-35
Module, Ecu, Lpg [Gm1.6l 2700], 2-35
Module, Ecu, Lpg [Mit 2.0l 2013], 6-25
Molding, Afmkt, Trim, Pvc, .08 .11, 01Ft, 3-37
Molding, Afmkt, Trim, Pvc, .08 .11, 1ft, 2-9
Molding, Trim, Pvc, .08-.11 06.8l, 2-79
Molding, Trim, Pvc, .08-.11 13.2l, 2-85
Molding, Trim, Pvc,.18-.31 07.5l, 2-107
Motor Kit, Pump, Repair,, 4-27
Motor Kit, Replmt [M20&T20], 2-147
Motor, Ele [12vdc, Shaker], 2-105
Motor, Ele 12Vdc, Shakr, 2-105
Motor, Ele, 12vdc, Pump, Water, 4-3
Motor, Ele, Gear, 14vdc, Pump, Detgt, 4-26
Motor, Hyd Gear In 4.5 B 1500, 4-8
Motor, Hyd, Gear, [Ex] .194 R 3000 (See Breakdowns), 2-151
Motor, Hyd, Gear, [Int], 19.0 X 3000, 4-5
Motor, Hyd, Gear, Ext 0.17 Lh 3000, 2-149, 2-151
Motor, Hyd, Gear, Ext 0.19 Rh 3000, 4-10
Motor, Hyd, Gear, Int 04.5 Bi-Dir 1500, 2-113, 2-115
Motor, Hyd, Gear, Int 04.5 Bi-Dir 1500 (See Breakdowns), 2-113, 2-115
Motor, Hyd, Gear, Int 08.9 Bi-Dir 2500, 3-9, 4-9
Motor, Hyd, Gear, Int 08.9 Bi-Dir 2500 (See Breakdowns), 3-7, 3-9
Motor, Hyd, Gear, Int 19.0 Bi-Dir 3000 (See Breakdowns), 2-91
Mount Wldt, Eng, Gas/Lpg, 2-23
Mount Wldt, Valve, Pinch, Lh, 2-145
Mount Wldt, Valve, Pinch, Rh, 2-139
Mount, Fltr, Remote, 6-21
Muffler, Catalytic [Gm 1.6], 2-51
Muffler, Catalytic [Gm 1.6l 2007], 2-53
Muffler, Catalytic [Gm 1.6l 2010], 2-53
Muffler, Catalytic [Mit 2.0l 2013], 2-77
Muffler, Short [Non-Catalytic Gm1.6/3.0], 2-51
Muffler, Vacfan, 4.0id, 2-151

N

Nipple, Hose, 3-63
Nozzle, 3-63
Nozzle Kit, Spray, Ci, 3-63
Nozzle, Spray, Gun, 3-63
Nozzle, Wand, Plstc, 14.0l, 3-61
Nozzle, Wand, Plstc, 14.0lg, 3-59
Nut, 6-9, 6-10
Nut-Hxslot .75-16 Pltd, 4-8
Nut, Adj, Mtg, Tank, Lpg, 2-87
Nut, Coil, F/#8, 4-11, 4-13, 4-15, 4-17, 4-19, 4-21, 4-23
Nut, Coil, Nyl Patch, 4-15, 4-17, 4-21, 4-23
Nut, Flange, 6-13
Nut, Flng, M05-0.8, 2-35, 6-30
Nut, Flng, M8, 6-15, 6-16, 6-19, 6-21, 6-22
Nut, Ftg, Hyd, 0.56-18, 2-171
Nut, Hex, Flng, M5 X 0.8, 2-101
Nut, Hex, Flng, M6 X 1.00, 2-59, 2-75, 2-79
Nut, Hex, Flng, M8 X 1.25, 2-37, 2-39, 2-127, 2-131, 2-171
Nut, Hex, Jam, .31-24, 2-95
Nut, Hex, Jam, .50-20, 2-117, 3-11
Nut, Hex, Jam, .50-20, Lh, 2-117
Nut, Hex, Jam, M10 X 1.5, Ss, 2-49, 2-87
Nut, Hex, Jam, M20 X 1.5, 2-17
Nut, Hex, Lock, .25-20, Nl, 2-83, 2-85, 2-147, 2-151
Nut, Hex, Lock, .25-20, Nl, Ss, 2-97, 2-99
Nut, Hex, Lock, .31-18, Nl, 2-15, 2-49
Nut, Hex, Lock, .31-18, Nl, Thin, 2-15
Nut, Hex, Lock, .31-24, Nl, Thin, 2-151
Nut, Hex, Lock, .38-16, Nl, Ss, 2-87, 3-11
Nut, Hex, Lock, .38-16, Nl, Thin, 2-87, 2-99, 2-147, 2-151
Nut, Hex, Lock, .50-13, Nl, Ss, 2-125
Nut, Hex, Lock, .50-13, Nl, Thin, 2-117
Nut, Hex, Lock, .50-20, Nl, Thin, 2-117
Nut, Hex, Lock, .75-10, Nl, 2-91
Nut, Hex, Lock, #08-32, Nl, 2-13
Nut, Hex, Lock, M10 X 1.5, Nl, 2-55, 2-59, 2-79, 2-87, 2-151, 2-171, 3-55, 3-67
Nut, Hex, Lock, M10 X 1.5, Nl, Ss, 2-103, 2-111, 2-121, 2-125
Nut, Hex, Lock, M12 X 1.75, Nl, Ss, 2-117, 2-121
Nut, Hex, Lock, M12 X 1.75,Nl, 2-23, 2-63, 2-65, 2-93
Nut, Hex, Lock, M4 X 0.7, Nl, 2-15, 2-21, 2-56, 3-21
Nut, Hex, Lock, M4 X 0.7, Nl, Ss, 2-21, 2-99, 2-127, 2-131, 3-3
Nut, Hex, Lock, M4 X 0.70, Nl, 3-69
Nut, Hex, Lock, M4 X 0.70, Nl, Ss, 3-37
Nut, Hex, Lock, M5 X 0.8, Nl, 2-15, 2-25, 2-31, 2-89
Nut, Hex, Lock, M5 X 0.8, Nl, Ss, 2-113, 2-115, 2-141, 3-13, 3-19, 3-25
Nut, Hex, Lock, M5 X 0.80, Nl, 3-37, 3-57, 3-63
Nut, Hex, Lock, M5 X 0.80, Nl, Ss, 3-33, 3-43, 3-47, 3-49, 3-51, 3-52, 3-53, 3-65
Nut, Hex, Lock, M6 X 1.0, Nl, 2-15, 2-17, 2-19, 2-25, 2-31, 2-41, 2-45, 2-55, 2-89, 2-95
Nut, Hex, Lock, M6 X 1.0, Ss, Nl, 2-13, 2-51, 2-105, 2-109, 2-111, 2-119, 2-121, 2-141, 2-143
Nut, Hex, Lock, M6 X 1.00, Nl, 2-9, 2-43, 2-47, 2-59, 2-71, 2-73, 2-79, 2-85, 3-69
Nut, Hex, Lock, M6 X 1.00, Nl, Ss, 3-57, 3-65
Nut, Hex, Lock, M6 X 1.00, Ss, Nl, 2-143
Nut, Hex, Lock, M8 X 1.25, Nl, 2-7, 2-9, 2-21, 2-41, 2-43, 2-45, 2-47, 2-49, 2-55, 2-61, 2-71, 2-73, 2-75, 2-79, 2-81, 2-83, 2-85, 2-87, 2-89, 2-95, 2-99, 2-129, 2-133, 2-175, 3-15, 3-69
Nut, Hex, Lock, M8 X 1.25, Nl, Ss, 2-51, 2-53, 2-55, 2-61, 2-77, 2-99, 2-103, 2-105, 2-109, 2-111, 2-113, 2-115, 2-117, 2-119, 2-121, 2-123, 2-125, 2-127, 2-131, 2-135, 2-139, 2-145, 2-149, 3-7, 3-13, 3-15
Nut, Hex, M10 X 1.5 [Stover], 2-51
Nut, Hex, M10 X 1.50 [Stover], 2-51, 2-53, 2-77
Nut, Hex, Sltd, .75-16, 2-93, 2-115
Nut, Hex, Sltd, .75-18, 2-113
Nut, Hex, Sltd, 1.12-18, 2-91
Nut, Hex, Sltd, M20 X 2.5, 8, 2-113, 2-115
Nut, Hex, Std, .25-20, 2-27, 2-29, 2-35, 2-67, 2-69
Nut, Hex, Std, .25-28, 2-95, 2-97
Nut, Hex, Std, .25-28, Lh, 2-95
Nut, Hex, Std, .31-18, 2-49, 3-55
Nut, Hex, Std, .38-16, 2-53, 2-77
Nut, Hex, Std, M10 X 1.50, 2-105
Nut, Hex, Std, M12 X 1.75, Ss, 2-129, 2-133, 2-149
Nut, Hex, Std, M16 X 2.0, 2-19
Nut, Hex, Std, M3 X 0.5, 8, 2-105
Nut, Hex, Std, M5 X 0.8, 8, 2-23, 2-99
Nut, Hex, Std, M6 X 1.00, 8, 3-37
Nut, Hex, Std, M8 X 1.25, 2-9, 2-49, 2-105
Nut, Hex, Std, M8 X 1.25, Brs, 2-23
Nut, Hex, Std, M8 X 1.25, Ss, 2-129, 2-133
Nut, Hex, Stover, M8, 2-77
Nut, Hex, Stover, M8 X 1.25, 2-59
Nut, Isolator, .38-16 Wall Th .015-.437, 3-59
Nut, Low Crown, .50-20, 2-147
Nut, M10-1.25 Flg [Mit], 6-16, 6-18
Nut, M10-1.25, Hx Flg [Mit], 6-25
Nut, M6-1.0 Flange [Mit], 6-25, 6-29
Nut, M8-1.25 [Mit], 6-15
Nut, Manifold, Exhaust, M8 X 1.25, 5-9
Nut, Motor, Hyd, 4-5
Nut, Solenoid, 4-13, 4-15, 4-17, 4-19, 4-21, 4-23
Nut, Strainer, 6-7

Nut, T, M10 X 1.50 X 15.8od X 13.0l, 2-127, 2-131
Nut, T, M8 X 1.25 X 14.5od X 9.5l, 3-7
Nut, Wheel, .50-20 X 60 Angle, 2-91

O

O-Ring, 6-3, 6-5, 6-12
O-Ring [Mit 208 Buna-N], 6-22, 6-23
Ohg Kit, Ci [M20 And T20], 3-55
Oil, Hyd [El, Iso 100, 01gal], 1-2
Oil, Hyd [El, Iso 100, 05gal], 1-2
Oil, Hyd [El, Iso 32, 01gal], 1-2
Oil, Hyd [El, Iso 32, 05gal], 1-2
Oil, Hyd [El, Iso 68, 01gal], 1-2
Oil, Hyd [El, Iso 68, 05gal], 1-2
Outlet, Water, W/Plug [Mit 2.0/2.4l], 6-22

P

Pad, Armrest, 4-31
Pad, Pedal, Brake, 3.96l 2.36w 0.75, 2-95
Pad, Tank, Hyd [W/Psa], 2-171, 2-173
Paint, Airdry, Blk, 12oz, 1-2
Paint, Airdry, Gray, 12oz [Enamel], 1-2
Paint, Airdry, Iron Gray,12oz[Pwdr Coat], 1-2
Paint, Airdry, Off-White, 12oz, 1-2
Paint, Airdry, Teal, 12oz, Solid, 1-2
Pan, Oil, 6-7
Pan, Oil, W/ Baffle / Plug / Seal, 5-8
Panel Kit, Instmt, Repair [M20/M30], 2-13
Panel Wldt, Adj, 2-9
Panel Wldt, Adj [2007], 2-9
Panel Wldt, Filler, 2-7
Panel Wldt, Gas, Replmt, 2-9
Panel Wldt, Gas, Replmt [W/Fast], 2-9
Panel Wldt, Gas, Replmt, TJ (Japan only), 2-9
Panel Wldt, Gas, Replmt, TJ [W/Fast] (Japan only), 2-9
Panel Wldt, Gas, Replmt, TJ, W/Es (Japan only), 2-9
Panel Wldt, Gas, W/ Es, Replmt, 2-9
Panel Wldt, LPG, Replmt, 2-9
Panel Wldt, LPG, Replmt [W/Fast], 2-9
Panel Wldt, LPG, Replmt, TJ (Japan only), 2-9
Panel Wldt, LPG, Replmt, TJ [W/Fast] (Japan only), 2-9
Panel Wldt, LPG, Replmt, TJ, W/Es (Japan only), 2-9
Panel Wldt, LPG, Replmt, W/Es, 2-9
Panel Wldt, Shrd, Fan, 2-55
Panel, Access, Door, 2-9
Panel, Access, Floor, 2-9
Panel, Instmt, Rh, Gas, Replmt, 2-13
Panel, Instmt, Rh, Lpg, Replmt, 2-13
Panel, Instmt, Rh, Lpg, Replmt, Ce (Japan and CE Only), 2-13
Panel, Kit, Instmt, Replmt [M20/M30 ec-H20 only], 2-13
Pawl, Str, 2-113, 2-115
Pedal, Brake, Lock, 2-95
Pedal, Propel, 2-97
Pin Kit, Wheel, Ci [M20/T20/M30], 2-7, 2-107, 3-13
Pin Wldt, 3-11
Pin Wldt, Front, 2-123, 3-9
Pin Wldt, Lift (Replaced by 9003478), 2-125
Pin Wldt, Pivot, Hppr, 2-7
Pin, 0.63d 01.8l, 1/M10h, 2cham, 2-125
Pin, 0.87d 01.8l, 1/M6 X 1.0, 1cham,Stl, 2-101
Pin, 30mmd X 215mml, 2-7, 2-107, 3-13
Pin, Arm, Safety, 2-101
Pin, Clevis, 0.25d X 0.75l, 2-95
Pin, Clevis, 0.31d X 0.75l, 3-7
Pin, Clevis, 0.31d X 1.00l, 2-95
Pin, Clevis, 0.37d X 1.31l, 3-11
Pin, Clevis, 0.37d X 1.50l, 3-11
Pin, Clevis, 0.37d X 1.75l, 2-109, 2-111, 2-117, 2-129, 2-133, 3-11
Pin, Clevis, 0.37d X 2.00l, 2-121
Pin, Clevis, 0.50 D X 4.50l, 2-97
Pin, Clevis, 0.62d X 2.91l, 2-101
Pin, Clevis, 0.75d X 2.00l, 2-117
Pin, Clevis, 0.88d X 2.25l, 2-101
Pin, Cotter, .062 X 0.50, 2-95
Pin, Cotter, .094 X 1.00, 2-95, 2-101, 2-109, 2-111, 2-121, 3-7, 3-11
Pin, Cotter, .125 X 1.00, 2-97, 2-129, 2-133
Pin, Cotter, .125 X 1.25, 2-113, 2-115
Pin, Cotter, .125 X 2.00, 2-91
Pin, Cotter, .156 X 1.25, 2-117
Pin, Cotter, .156 X 2.00, 2-93, 2-107
Pin, Cotter, Hair, 0.31d .058 Wir, 2-15
Pin, Cotter, Hair, 0.38d .072 Wir, 2-117
Pin, Cotter, Hair, 0.62d .120 Wir, 2-101
Pin, Cotter, Hair, 1.00d .178 Wir, 2-7, 2-107, 3-13
Pin, Cotter, Hair, Dbl, 2-7, 3-13
Pin, Dowel, 6-3, 6-9, 6-10, 6-12
Pin, Dowel, Pump, Hyd, 4-7
Pin, Flywheel [Mit 20/20m], 6-18
Pin, Grvd, 0.43d 01.8l [303ss], 2-123, 3-9
Pin, Hitch, .375d X 3.12l, Pl, 3-7, 3-9, 3-67
Pin, Lift, Drain, 2-143
Pin, Locating, Lpg, 2-87
Pin, Lock, Cyl Head, 14mm X 17mm, 5-3, 5-5
Pin, Lock, Transmission, 5-5
Pin, Locking, Steering, Tilt, 2-17
Pin, Retainer, 2-31
Pin, Ring, Lock, Hsng, Water Pump, 5-7
Pin, Roll, .125 D X 0.75l, .125/.129, 2-107
Pin, Roll, .187d X 1.62l, .187/.192, 2-7, 2-107, 3-13
Pin, Spring, 6-9
Pin, Valve, Steering, 4-25
Pipe Kit, Exhaust, Replmt [M20.T20, M30], 2-53
Pipe Kit, Exhaust, Replmt [Mako Mitsu], 2-77
Piston Set, Ring, 6-10
Piston, Pin [Std A], 6-10
Piston, Pin [Std B], 6-10
Piston, Pin [Std C], 6-10
Piston, Pump, Hyd, Gear, 4-5
Piston, W/ Pin, Std, 5-5
Pivot Wldt, Brush, Side, 3-11
Plate Assy, Orifice, 0.0105Id, Green, 4-32
Plate Kit, Repair, 2-23
Plate Wldt, Arm, Stop, 2-101
Plate Wldt, Fan, Hub [Gm 1.6l], 2-49
Plate Wldt, Hose, Vacuum, 2-147, 2-149
Plate Wldt, Lift, Sqge, 2-121
Plate Wldt, Mtg, 3-37
Plate Wldt, Mtg, Fan, 2-149
Plate Wldt, Mtg, Solenoid, 2-107
Plate Wldt, Retainer, Sqge, 3-9
Plate Wldt, Seat, 2-15
Plate Wldt, Shaft, Fan [Shaft Extended], 2-75
Plate Wldt, Shakr, Side, 2-105
Plate Wldt, Wrap, Brush, 2-117
Plate, Backing, Brake, 2-93
Plate, Bottom, Hppr, 2-109, 2-111
Plate, Cam, 4-7
Plate, Cover, 4-7
Plate, Cover, Screen, 3-69
Plate, Door, Clean-Out [Mit2013], 2-79
Plate, Guard, Belt [Gm 1.6l], 2-23
Plate, Guard, Fan Shrd, Gas/Lpg, Replmt, 2-55
Plate, Handle, 2-113, 2-115
Plate, Hook, Latch, 3-65
Plate, Hook, Latch, [M20], 3-65
Plate, Hsng [FaST], 3-19
Plate, Inspection, 3-37
Plate, Label, Soltn Tank (ec-H20 only), 2-136
Plate, Mtg, 3-67
Plate, Mtg [Epr], 6-29
Plate, Mtg, Ecu [Mit 2.0/2.4l], 6-25
Plate, Mtg, Latch, 2-135, 2-136
Plate, Mtg, Light, 2-13
Plate, Mtg, Prop Rod, 2-143
Plate, Mtg, Pump, 3-37, 3-63
Plate, Mtg, Relay, 2-27, 2-29, 2-35
Plate, Mtg, Seal, 2-19, 2-55
Plate, Mtg, Skirt, Scb Head (Replaced by None), 2-119
Plate, Mtg, Vacuum Wand, 3-59
Plate, Mtg, Valve, 3-25, 3-33, 3-43
Plate, Orifice, 0.070id, 3-19
Plate, Orifice, 0.093id, 3-19
Plate, Pin, Clevis, Upper, 2-101
Plate, Retainer, Door, Dump, 2-109, 2-111
Plate, Seal, Sound, 2-21
Plate, Shakr, 2-105
Plate, Shakr, Bar, 2-105
Plate, Shield, Dust, 2-75
Plate, Shield, Heat, Gas/Lpg, Replmt, 2-51, 2-53

Plate, Skirt, Front, 2-119
Plate, Spacer, Motor, Hyd [En], 4-9
Plate, Sppt, 2-95
Plate, Sppt, Tank, 2-143
Plate, Stop, Brake, 2-95
Plate, Tank, Bottom, 2-143
Plate, Tensioner, Adj [Mit 2.0/2.4l], 6-17
Plate, Valve, Motor, Hyd, 4-5
Plate, Valve, Pump, Hyd, 4-7
Plate, Water, Outlet [Mit Bypass], 6-23
Plate, Wear, Steering Valve, 4-25
Plug, 4-5, 6-3
Plug #10, 4-8
Plug #4, 4-8
Plug Assy [Cl], 4-25
Plug Kit, Drain, Recvy, Ci [M20 & T20], 2-143
Plug Orifice, Valve, Hyd, .140, 4-21, 4-23
Plug Wldt, Drive, Brush, 2-113, 2-115
Plug Wldt, Drive, Brush, Sweep, 2-113, 2-115
Plug, .12npt, Ss, 2-27, 2-29, 2-31, 2-35
Plug, 1/8 Npt, Brs, Skt Hd [Mit], 6-15
Plug, 1/8npt, Brs [Mit], 6-30
Plug, 3/8npt X 5/16, Brs [Mit], 6-21
Plug, Bore, Valve, Relief, Oil Press, 5-7
Plug, Cap, 6-12
Plug, Drain, Expandable, 4.75-6.00, 2-143
Plug, Drain, Oil Pan, M14 X 1.5 X 12, 5-8
Plug, Flare, 37deg [Mit], 6-7
Plug, Hole, Coolant, Eng Block, 5-5
Plug, Hole, Core, Eng Block, 5-8
Plug, Hole, Injector, 2-31, 2-35
Plug, Hole, Rnd, 0.50h .03-.12, Blk Nyl, 2-13
Plug, Hole, Rnd, 0.81h, Blk, 2-9
Plug, Hole, Rnd, 0.88h .03-.12, Blk Nyl, 2-9
Plug, Hole, Rnd, 1.00h .03-.12, Blk Nyl, 2-9
Plug, Hole, Rnd, 1.25H .03-.12, Blk Nyl, 2-15
Plug, Hole, Rnd, 2.50h .03-.25, Blk Nyl, 2-9
Plug, Hole, Rt, Rocker Switch, .87 X 1.7, 2-13
Plug, Hole, Soltn Tank, Blk Pyu, 2-135
Plug, Hose, Pyu, 2-139, 2-145
Plug, Hsng, Oil Pump, 5-7
Plug, Injector [Mit], 6-15
Plug, Manifold, Intake, 2-25, 2-27, 2-29, 2-31, 2-35
Plug, Oil, Drain, 6-7
Plug, Orifice, 0.060, Ss [FaST Ii+], 4-32
Plug, Orifice, Valve, Hyd, .030, 4-11, 4-21, 4-23
Plug, Orifice, Valve, Hyd, .040, 4-11, 4-13, 4-15, 4-17, 4-21, 4-23
Plug, Orifice, Valve, Hyd, .046, 4-19, 4-21, 4-23
Plug, Orifice, Valve, Hyd, .063, 4-19
Plug, Port, Sensor [Map], 2-25, 2-27, 2-29, 2-31, 2-35
Plug, Pump, Hyd, Gear, 4-5
Plug, Restrictor, 3-43
Plug, Rubber, 6-7
Plug, Spark, 1-1
Plug, Spark [Mitsubishi 2015 12mm], 6-19
Plug, Spark [Torch K6rf-11 14mm], 6-19
Plug, Taper, 6-3
Plug, Tapper, 6-12
Plunger, 3-59, 3-61
Poppet, Pump, Hyd, Gear, 4-5
Pouch, 3-39
Pulley Assy, Damper, Torsional, 6-10
Pulley, Idler, 6-9
Pulley, Pump, Water, 6-13
Pulley, Tension, Belt, Timing, 5-11
Pulley, Tensioner, 6-9
Pulley, Tensioner, Assy[Mit2.0/2.4l], 6-17
Pump Assy, Column, Es, 4-3
Pump Assy, Column, Es (See Breakdowns), 3-5
Pump Kit, Hyd, Rotating [Cessna], 4-7
Pump Kit, Mtg, Aux, Ci [M20 & T20], 2-169
Pump, Diaphragm, 4-27
Pump, Air, Ele, 12vdc, 3-21
Pump, Detgt, 12vdc, 3-21
Pump, Detgt, 14vdc, 150ml/Min 20psi, 4-26
Pump, Detgt, 14vdc, 150ml/Min 20psi (See Breakdowns), 3-3
Pump, Diaphragm (See Breakdowns), 3-63
Pump, Fuel, 2-85
Pump, Fuel, Hi Press [Gm 1.6l/3.0l], 2-83
Pump, Gear, Drive, Oil, 6-12
Pump, Gear, Oil, 6-12
Pump, Hyd, Piston, Var, 1.24 4000, Cw, 4-7
Pump, Hyd, Piston, Var, 1.24 4000, Cw (See Breakdowns), 2-169
Pump, Oil, 5-7, 6-12
Pump, Soltn, 13.7vdc, 65psi [FaST Ii+], 3-29
Pump, Soltn, Ele, 12vdc [W/O Chk Valve], 3-19
Pump, Soltn, Ele, 13.7vdc,12/28psi, 3-37
Pump, Water, 6-13
Pump, Water [Gm], 5-7

R

Race Thrust, 4-8
Race, Brg, Pump, Hyd, 4-7
Rad Screen Kit, Replmt [M/T20,M30 G/Lp], 3-69
Radiator, 2-56
Radiator Kit, Replmt, Ci, 2-56
Radiator, W/ Hyd Cooler [Side X Side], 2-59, 2-79
Rail, Injector, Fuel, Plstc, 2-27, 2-29
Rail, Injector, Gas, W/ Press Reg, 2-25
Receptacle, Lamp [Speaker], 2-7
Regulator , 6-29
Regulator [Ep], 2-37, 2-39
Regulator, Lpg, 2-31
Regulator, Press, Electronic [Epr], 6-30
Relay, 12vdc, 20a, Spdt, 2-238
Relay, 12vdc, 40a, Spdt, 2-238
Relay, 12vdc, 40a, Spdt N/O, 2-89, 3-19, 3-63
Relay, 12vdc, 040a, Spdt No, 2-233, 3-29, 3-37
Repair Kit, Mixer, 2-35, 6-30
Repair Kit, Vaporizer, 6-29
Reservoir, Hyd, 10.0Gal, Replmt, 2-173
Resistor, Ele, Plug [430 , 2w], 3-46
Restrictor, Jet, Coolant, 2-31
Retainer, Boot, Steering Column, 2-17
Retainer, Camshaft, 5-11
Retainer, Motor, Hyd, 4-5
Retainer, Ring, Brake, 2-93
Retainer, Skirt, 2-119
Retainer, Skirt, Front, 2-119
Retainer, Sparkplug, 2 Way, 5-12
Retainer, Sparkplug, 3 Way, 5-12
Retainer, Spring, 2-121
Retainer, Sqge, 3-7
Retainer, Sqge, Side, Lh, 2-131
Retainer, Sqge, Side, Rh, 2-127
Ring Kit, Piston, Std 78.95-79.02mm, 5-5
Ring, Lock, 4-7
Ring, Motor, Hyd, 4-5
Ring, Mtg, Sqge, .50l, 2-123
Ring, Retainer, Steering Valve, 4-25
Ring, Retaining, 4-7, 6-17
Ring, Retaining, Ext, 0.38d, [E-Ring], 2-123, 2-125, 3-9
Ring, Retaining, Ext, 0.38d, [Selflock], 2-121
Ring, Retaining, Ext, 0.50d, Hd, 2-17
Ring, Retaining, Ext, 0.62d, Hd, 2-125
Ring, Retaining, Ext, 0.98d, [E-Ring], 2-95
Ring, Retaining, Ext, 1.00d, Basic, 2-113, 2-115
Ring, Retaining, Int, 2.00d, 2-101
Ring, Retaining, Pump, Hyd, 4-7
Rivet, Blind, .125d X 0.54 X .25d, Alm, 2-135, 2-136
Rivet, Plstc, .250d X 0.898, 2-17
Rivet, Plstc, .250d X 0.90, 3-39, 3-61
Rod, 2-95
Rod Assy, Connecting, 6-10
Rod Wldt, Arm, Safety, 2-101
Rod-End, .25-28rh Fem 0.25b [Teflon], 2-97
Rod-End, .50-20lh Fem 0.50-20stud, 2-117
Rod-End, .50-20rh Fem 0.50b, 2-117
Rod-End, .50-20rh Mal 0.50b, 3-11
Rod, Connecting, M08 X 45, 5-5
Rod, Hanger, Isolator, 2-53, 2-77
Rod, Thrd, 2 End, .50-20 04.9l, Rh / Lh, 2-117
Roller, Brg, 2-139, 2-145

S

Screen Kit, Hppr, Replmt [M20], 2-103
Screen Wldt, Hppr, 2-103
Screen, Oil, 6-7
Screen, Oil Pump, W/ Suc Pipe, 5-7
Screen, Pump, 3-5
Screen, Vacuum, 2-143
Screw, 2-37, 2-39, 4-8, 6-5, 6-12
Screw, Adj, Valve, Hyd, 5-3
Screw, Btn, M8 X 1.25 X 16, Ss, 3-13
Screw, Btn, M8 X 1.25 X 20, Blk, 2-127, 2-131, 3-65
Screw, Btn, M8 X 1.25 X 25, Ss, 2-117, 3-7
Screw, Cap, 4-7
Screw, Cap, Motor, Hyd, 4-5
Screw, Flt, .25-20 X 1.00, Al, 2-147
Screw, Flt, .38-16 X 0.75, Al, 2-49
Screw, Flt, .38-16 X 1.00, Al, 2-49
Screw, Flt, .38-16 X 1.50, Al, 2-147
Screw, Flt, M10 X 1.5 X 25, 10.9, 2-127, 2-131
Screw, Flt, M10 X 1.5 X 30, Ss 18-8, 2-109
Screw, Flt, M8 X 1.25 X 20, Blk, 2-127, 2-131
Screw, Flt, M8 X 1.25 X 25, 2-21
Screw, Flt, M8 X 1.25 X 25, 10.9, 2-109
Screw, Flt, M8 X 1.25 X 30, Ss, 2-139, 2-145
Screw, Flt, Soc, .25-20 X 1.00, Al, 2-151
Screw, Flt, Soc, .38-16 X 1.00, Al, 2-75
Screw, Hex, .25-14 X 0.75, Fmg/Ab, Ss, 2-143
Screw, Hex, .25-20 X 0.50, 5, 2-23
Screw, Hex, .25-20 X 0.50, G5, 2-27, 2-29, 2-35, 2-67, 2-69
Screw, Hex, .25-20 X 0.75, G5, 2-27, 2-29, 2-35
Screw, Hex, .25-20 X 0.75, Nl, 2-151
Screw, Hex, .25-20 X 1.00, 5, 3-7, 3-9
Screw, Hex, .25-20 X 1.75, Ss, 2-97
Screw, Hex, .25-20 X 2.25, Ss, 2-97
Screw, Hex, .31-18 X 1.75, 5, 2-49
Screw, Hex, .31-18 X 4.50, 5, 2-49
Screw, Hex, .31-24 X 0.75, Nl, 2-99
Screw, Hex, .38-16 X 0.75, G5, 2-49
Screw, Hex, .38-16 X 0.75, Nl, 2-113, 2-115, 3-7, 3-9
Screw, Hex, .38-16 X 0.88, 5, 3-67
Screw, Hex, .38-16 X 1.00, 5, 2-83, 2-99
Screw, Hex, .38-16 X 1.25, 5, 2-169, 3-59
Screw, Hex, .38-16 X 1.25, Nl, 2-99
Screw, Hex, .38-16 X 1.50, Ss, 3-11
Screw, Hex, .38-16 X 2.00, Ss, 2-99
Screw, Hex, .38-16 X 3.00, 5, 2-87
Screw, Hex, .38-16 X 3.75, 5, 2-87
Screw, Hex, .50-13 X 1.25, 5, 2-23
Screw, Hex, .50-13 X 1.50, 5, 2-117
Screw, Hex, .50-13 X 3.00, Ss18-8, 2-125
Screw, Hex, .75-10 X 3.25, G5, 2-91
Screw, Hex, .75-10 X 4.00, 5, 2-91
Screw, Hex, #10-16 X 0.62, Fmg [Ab], 3-63
Screw, Hex, #10-16 X 0.62, Fmg, [Ab], 2-19
Screw, Hex, #10-24 X 0.50, Ss, 2-49
Screw, hex, H6 X 1.00 X 20, 9.8, Sems, 3-57
Screw, Hex, M07-1.00 X 20.0, 8.8, 2-23
Screw, Hex, M10 X 1.25 X 25, 8.8, 2-63, 2-65
Screw, Hex, M10 X 1.5 X 16, 8.8, 2-17
Screw, Hex, M10 X 1.5 X 20, 8.8, 2-49
Screw, Hex, M10 X 1.5 X 20, Ss, 2-105, 2-109, 2-111
Screw, Hex, M10 X 1.5 X 25, 8.8, 2-7, 2-9, 2-23, 2-171
Screw, Hex, M10 X 1.5 X 25, Ss, 2-101, 2-107, 2-117, 2-129, 2-133
Screw, Hex, M10 X 1.5 X 30, 8.8, 3-55
Screw, Hex, M10 X 1.5 X 30, Ss, 2-7, 2-109, 2-111, 2-121, 3-13
Screw, Hex, M10 X 1.5 X 35, 8.8, 2-51, 2-53, 2-77, 3-67
Screw, Hex, M10 X 1.5 X 40, 8.8, 2-151
Screw, Hex, M10 X 1.5 X 45, 8.8, 3-67
Screw, Hex, M10 X 1.5 X 80, 8.8, 3-67
Screw, Hex, M10 X 1.50 X 20, 8.8, 2-53
Screw, Hex, M10 X 1.50 X 25, 8.8, 2-59
Screw, Hex, M10 X 1.50 X 45, 8.8, 2-59, 2-79
Screw, Hex, M10 X 1.50 X 60, 8.8, 2-105
Screw, Hex, M12 X 1.75 X 30, 8.8, 3-11
Screw, Hex, M12 X 1.75 X 30, Ss, 2-107
Screw, Hex, M12 X 1.75 X 35, 8.8, 2-63, 2-65
Screw, Hex, M12 X 1.75 X 40, 8.8, 2-93, 2-117
Screw, Hex, M12 X 1.75 X 55, Ss, 2-129, 2-133
Screw, Hex, M12 X 1.75 X 60, 8.8, 2-23, 2-63, 2-65
Screw, Hex, M16 X 2.0 X 90, 8.8, 2-19
Screw, Hex, M4 X 0.7 X 10, Fmg, 2-101
Screw, Hex, M4 X 0.7 X 12, 8.8, 3-21
Screw, Hex, M4 X 0.70 X 10, Ss, 3-69
Screw, Hex, M4 X 0.70 X 12, 8.8, 3-37
Screw, Hex, M4 X 0.70 X 50, Ss, 4-29
Screw, Hex, M5 X 0.8 X 10, Fmg, 2-117
Screw, Hex, M5 X 0.8 X 12, Ss, 3-13, 3-67
Screw, Hex, M5 X 0.8 X 16, Fmg, 3-59
Screw, Hex, M5 X 0.8 X 20, 8.8, 2-15, 2-99, 2-101
Screw, Hex, M5 X 0.80 X 10, Fmg, 3-37
Screw, Hex, M5 X 0.80 X 16, Fmg, 3-61
Screw, Hex, M5 X 0.80 X 16, Ss, 3-57
Screw, Hex, M5 X 0.80 X 20, 8.8, 3-37
Screw, Hex, M6 X 1.0 X 12, Fmg, 2-7, 2-55, 2-171
Screw, Hex, M6 X 1.0 X 12, Ss, 3-65
Screw, Hex, M6 X 1.0 X 16, 8.8, 2-19, 2-25, 2-31, 2-55, 2-89, 2-95
Screw, Hex, M6 X 1.0 X 16, Fmg, 2-95, 2-97, 2-107, 2-119, 3-3, 3-19, 3-21
Screw, Hex, M6 X 1.0 X 16, Ss, 2-105
Screw, Hex, M6 X 1.0 X 20, 8.8, 2-15, 2-41, 2-45, 2-55
Screw, Hex, M6 X 1.0 X 20, 9.8, Sems, 2-56, 2-101
Screw, Hex, M6 X 1.0 X 20, Ss, 2-51, 2-53, 2-77, 2-109, 2-111, 2-141, 2-143
Screw, Hex, M6 X 1.0 X 25, 8.8, 2-107
Screw, Hex, M6 X 1.0 X 25, Ss, 2-129, 2-133
Screw, Hex, M6 X 1.0 X 35, Ss, 2-119
Screw, Hex, M6 X 1.0 X 50, 8.8, 2-85
Screw, Hex, M6 X 1.0 X 55, Ss, 2-143
Screw, Hex, M6 X 1.0 X 60, 8.8, 2-95
Screw, Hex, M6 X 1.00 X 12, Ss, 2-136, 3-37, 3-65
Screw, Hex, M6 X 1.00 X 16, 8.8, 2-9, 2-27, 2-29, 2-35, 2-37, 2-87
Screw, Hex, M6 X 1.00 X 16, Fmg, 2-59, 3-69
Screw, Hex, M6 X 1.00 X 16, Ss, 3-29
Screw, Hex, M6 X 1.00 X 20, 8.8, 2-23, 2-77
Screw, Hex, M6 X 1.00 X 20, 9.8, Sems, 2-17, 2-19, 2-59, 2-79, 3-37
Screw, Hex, M6 X 1.00 X 20, Ss, 2-129, 2-133
Screw, Hex, M6 X 1.00 X 25, 9.8 Sems, 2-13, 2-43, 2-47, 2-59, 2-71, 2-73, 2-79
Screw, Hex, M6 X 1.00 X 25, 9.8, Sems, 3-69
Screw, Hex, M6 X 1.00 X 25, Ss, 2-143
Screw, Hex, M6 X 1.00 X 35, 8.8, 2-27, 2-29, 2-35
Screw, Hex, M6 X 1.00 X 35, Ss, 3-37
Screw, Hex, M8 X 1.25 X 110, Ss, 2-123, 3-15
Screw, Hex, M8 X 1.25 X 120, 8.8, Fl, 2-75, 2-175
Screw, Hex, M8 X 1.25 X 130, 8.8, 2-113, 2-115
Screw, Hex, M8 X 1.25 X 16, 8.8, 2-49, 2-75, 2-143, 3-11
Screw, Hex, M8 X 1.25 X 16, Ss, 2-113, 2-115, 2-139, 2-145
Screw, Hex, M8 X 1.25 X 20, 8.8, 2-9, 2-15, 2-19, 2-21, 2-41, 2-45, 2-49, 2-59, 2-61, 2-75, 2-81, 2-83, 2-85, 2-87, 2-91, 2-95, 2-147
Screw, Hex, M8 X 1.25 X 20, Ss, 2-9, 2-15, 2-21, 2-55, 2-61, 2-87, 2-105, 2-113, 2-115, 2-117, 2-119, 2-129, 2-133, 2-135, 2-139, 2-143, 2-145, 2-147, 2-149, 2-175, 2-177, 3-3, 3-5, 3-21, 3-29, 3-37, 3-47, 3-49, 3-51, 3-63
Screw, Hex, M8 X 1.25 X 25, 8.8, 2-7, 2-9, 2-41, 2-43, 2-45, 2-47, 2-55, 2-59, 2-71, 2-73, 2-75, 2-79, 2-81, 2-83, 2-85, 2-87, 2-105, 2-139, 2-145, 2-149, 2-171
Screw, Hex, M8 X 1.25 X 25, 9.8, Sems, 2-7, 2-59, 2-79, 2-89, 2-107, 2-143, 2-151, 3-69

Screw, Hex, M8 X 1.25 X 25, Fmg, 2-119, 3-21, 3-25, 3-33, 3-43
Screw, Hex, M8 X 1.25 X 25, Ss, 2-61, 2-99, 2-103, 2-109, 2-111, 2-113, 2-115, 2-119, 2-121, 2-135, 2-149, 3-7, 3-11, 3-15
Screw, Hex, M8 X 1.25 X 30, 8.8, 2-75, 2-139, 2-145
Screw, Hex, M8 X 1.25 X 30, 9.8, Sems, 2-173, 3-69
Screw, Hex, M8 X 1.25 X 30, Ss, 2-149
Screw, Hex, M8 X 1.25 X 35, 8.8, 2-95, 2-139, 2-145
Screw, Hex, M8 X 1.25 X 35, 9.8, Sems, 2-59, 2-79, 3-69
Screw, Hex, M8 X 1.25 X 35, Fl, Ss, 2-149
Screw, Hex, M8 X 1.25 X 35, Ss, Fl, 2-121
Screw, Hex, M8 X 1.25 X 40, 8.8, Fl, 2-75
Screw, Hex, M8 X 1.25 X 40, Ss, Nl, 2-99
Screw, Hex, M8 X 1.25 X 45, 8.8, 2-83, 2-85
Screw, Hex, M8 X 1.25 X 45, Ss, 2-51, 2-53, 2-77, 2-125
Screw, Hex, M8 X 1.25 X 50, 8.8, 2-99
Screw, Hex, M8 X 1.25 X 50, Ss, Fl, 2-119
Screw, Hex, M8 X 1.25 X 60, 8.8, 2-105, 2-121
Screw, Hex, M8 X 1.25 X 60, 8.8, Fl, 2-9, 2-49
Screw, Hex, M8 X 1.25 X 60, Fl, 2-117
Screw, Hex, M8 X 1.25 X 70, 8.8, 2-95
Screw, Hex, M8 X 1.25 X 90, 8.8, 2-75, 2-125
Screw, Motor, Hyd [En], 4-9
Screw, Mtg [Ehpr98], 4-17, 4-23
Screw, Pan, #12-16 X 0.50, F/ Plstc, 2-143, 3-70
Screw, Pan, 12-16 X 0.50, F/ Plstc (ec-H20 only), 2-136
Screw, Pan, M3 X 0.5 X 20, 4.8, 2-105
Screw, Pan, M4 X 0.7 X 10, Ss, 2-127, 2-131
Screw, Pan, M4 X 0.7 X 16, 4.8, 2-21
Screw, Pan, M4 X 0.7 X 16, Ss, 2-21, 3-3
Screw, Pan, M4 X 0.7 X 20, 4.8, 2-107
Screw, Pan, M4 X 0.7 X 20, Ss, 2-107
Screw, Pan, M4 X 0.7 X 25, 4.8, 2-15
Screw, Pan, M4 X 0.7 X 35, Ss, 2-99
Screw, Pan, M4 X 0.70 X 16, 4.8, 2-55
Screw, Pan, M5 X 0.8 X 12, Ss, 2-15, 2-21, 2-87, 2-105, 2-141, 3-19, 3-25
Screw, Pan, M5 X 0.8 X 40, 4.8, 2-25, 2-31
Screw, Pan, M5 X 0.8 X 40, Ss, 2-113, 2-115, 3-19
Screw, Pan, M5 X 0.80 X 45, 4.8, 3-63
Screw, Pan, M6 X 1.0 X 16, Ss, 2-121
Screw, Pan, M6 X 1.00 X 16, 4.8, 2-49
Screw, Pan, M8 X 1.25 X 25, Blk, 2-9, 2-13, 2-15, 2-17, 2-21
Screw, Pan, M8 X 1.25 X 25, Ss, 2-7
Screw, Pan, Phl, 06-20 X 0.50, Fmg/Ab, 2-21, 2-135, 2-136
Screw, Pan, Phl, 12-16 X 0.50, F/ Plstc, 2-135, 2-136
Screw, Pan, Phl, M4 X 0.70 X 20, Ss, 3-37
Screw, Pan, Phl, M5 X 0.80 X 12, Ss, 3-29, 3-33, 3-65
Screw, Pan, Phl, M5 X 0.80 X 16, Tcut,Ss, 4-29
Screw, Pan, Phl, M5 X 0.80 X 20, Ss, 3-43, 3-47, 3-49, 3-51, 3-52, 3-53
Screw, Pan, Phl, M6 X 1.00 X 35, Ss, 2-5
Screw, Set, #10-24 X 0.25, Nl, 2-105
Screw, Soc, .25-20 X 0.75, Al, 2-17
Screw, Soc, .38-16 X 1.50, Al, 2-23
Screw, Soc, .50-13 X 1.50, Al, 2-91
Screw, Soc, M12 X 1.75 X 55, 10.9, 2-23
Screw, Soc, M16 X 2.0 X 50, 12.9, 2-91
Screw, Soc, M4 X 0.70 X 16, 6-30
Screw, Soc, M6 X 1.0 X 25, 12.9, 2-25
Screw, Soc, M6 X 1.0 X 45, 12.9, 2-25
Screw, Soc, M6 X 1.00 X 25, 12.9, 2-27, 2-29, 2-35
Screw, Soc, M6 X 1.00 X 45, 12.9, 2-27, 2-29
Screw, Soc, M8 X 1.25 X 25, 12.9, 2-129, 2-133
Screw, Soc, M8 X 1.25 X 35, 12.9, 2-129, 2-133
Screw, Soc, M8 X 1.25 X 70, 12.9, 2-35
Screw, Valve, Steering, 4-25
Screw,Hex, M5 X 0.80 X 29, 8.8, 3-57
Seal Kit, Cartridge, 2-177, 4-11, 4-13, 4-15, 4-17, 4-19, 4-21, 4-23
Seal Kit, Motor [Cl], 3-9, 4-9
Seal Kit, Pump, Hyd, 4-7
Seal Kit, Steering [Cl], 4-25
Seal Kit, Valve [Ehpr98], 4-17, 4-23
Seal Replmt Kit, 4-8
Seal, Sponge, 0.88 1.00W 43.0L, 2-19
Seal, Afmkt, Bulb, 90, 0.50d, 02ft, 2-15
Seal, Afmkt, Bulb, 90, 0.75d F/11ga 02ft, 2-15, 2-21
Seal, Afmkt, Bulb, 90, 0.75d F/11ga 08ft, 2-9
Seal, Afmkt, Bulb, Str, 0.58d 08ft, 2-79, 3-69
Seal, Afmkt, Bulb, Str, 1.0d F/11ga 08ft, 2-19
Seal, Afmkt, Ure, Adh, 0.38, 0.38w 02ft, 2-79
Seal, Afmkt, Ure, Adh, 0.38, 0.75w 08ft (Replaced By none), 2-105
Seal, Bulb, Str, .50Hi .50W 047.2L, Adh, 2-135, 2-136
Seal, Cam Shaft, Front, 6-5
Seal, Cap, 6-5
Seal, Case, Oil, Rear, 6-3
Seal, Door, Dump, 2-109, 2-111
Seal, Door, Dump, Side, 2-109
Seal, Drive, Rear, Grease Cav, 2-91
Seal, Foam, 0.50, 2-9
Seal, Oil, 6-3, 6-12, 6-19
Seal, Oil, Cshft, 5-5
Seal, Org, 2-31
Seal, Org, .069 X 3.06id, 2-169
Seal, Org, .072 X 00.35id #04, 4-11, 4-19, 4-21, 4-23
Seal, Org, .078 X 00.47id #06, 4-11, 4-13, 4-19, 4-21, 4-23
Seal, Org, .078 X 00.47id 06, 4-15, 4-17
Seal, Org, .087 X 00.64id #08, 4-19
Seal, Org, Bolt, Cover, Camshaft Hsng, 5-11
Seal, Org, Cap, 5-3
Seal, Org, Cap, Fltr, Oil, 5-8
Seal, Org, Hsng, Oil Pump, 5-7
Seal, Org, Lpg, Mixer, 6-28
Seal, Org, Oil Pump, 5-7
Seal, Org, Press Switch / Drain Plug, 5-7, 5-8
Seal, Org, Sensor, Temp [Epr], 2-37, 2-39
Seal, Org, Throttle Body, 2-31
Seal, Org, Water Pump, 5-7
Seal, Panl, Instmt, 2-9
Seal, Plug, Drain, Nitrile, 2-143
Seal, Radiator, 2-55
Seal, Radiator, Upper, 2-89
Seal, Rbr, Clsd, 0.13, Instmt Panl, 2-13
Seal, Ring, Pipe, Suc, Oil Pump, 5-7
Seal, Seat, Valve, 5-3
Seal, Shaft, Drain Plug, 2-143
Seal, Tube, Water [Mit 2.0l], 6-22
Seal, Ure, 0.38 0.75w 13.2l Adh, 2-151
Seal, Ure, 0.38 0.75w 33.0l Adh, 2-151
Seal, Wire, 14/16ga [Wp / Mp280 Sealed], 4-27
Sealant, Tube, Ds, 5-8
Seat, 4-31
Seat (See Breakdowns), 2-15
Seat, Rotator, Valve, 5-3
Seat, Spring, Valve, 5-3
Seat, Spring, Valve, 0.333, 5-3
Seat, Suspension, W/1 Arm And Belt, 2-15
Seat, Valve, Exhaust, [+0.2mm], 5-3
Seat, Valve, Exhaust, [+0.4mm], 5-3
Seat, Valve, Exhaust, Std, 5-3
Seat, Valve, Intake, [+0.2mm], 5-3
Seat, Valve, Intake, [+0.4mm], 5-3
Seat, Valve, Intake, Std, 5-3
Seatbelt, 4-31
Seatbelt, Retractable [Deluxe Seat], 2-15
Send-Unit, Fuel, 2-83
Send-Unit, Fuel [2007], 2-85
Send-Unit, Water, Temp, 04npt 113oh/195d, 2-173
Sender, Oil, Press [Mit] (3 Prong), 6-12
Sensor [T Map], 2-27, 2-29, 2-35
Sensor [Tmap], 2-25, 2-31, 6-25
Sensor Kit, Repair [Thermo-Sentry, M20], 2-105
Sensor, Camshaft [Mit], 6-25
Sensor, Exhaust, Tailpipe, 2-53, 2-77, 6-25
Sensor, Level, Liq, 14vdc 01a .62-11, 2-136, 2-143, 3-5
Sensor, Oxygen, 2-51
Sensor, Oxygen [Gm 1.6L/3.0L 2007], 2-53
Sensor, Position, Cshft, 2-23, 5-7

Sensor, Spd / Dir, 6-30vdc, 2-99
Sensor, Spd, Timing Wheel [3.0l], 6-25
Sensor, Temp [Epr], 2-37, 2-39
Sensor, Temp, Coolant, 2-23, 6-25
Sensor, Temp, Water [Rework For 1.6GM], 2-23
Shaft Wldt, Brake, 2-95
Shaft Wldt, Pedal, Brake, 2-95
Shaft, Arm , Rocker, 6-9
Shaft, Arm, Rocker, 6-9
Shaft, Brush, Idler, 2-113, 2-115
Shaft, Cap, Rocker, 6-9
Shaft, Left, Balancer, 6-11
Shaft, Motor, Hyd, 4-5
Shaft, Output, 4-8
Shaft, Output, Motor, Hyd [En], 4-9
Shaft, Pump, 4-7
Shaft, Pump, Water, 4-3
Shaft, Right, Balancer, 6-11
Shaft, Spring, Rocker, 6-9
Shaker Wldt, 2-105
Sheave Assy Kit, Repair, 2-49
Sheave, 5.00dia [Gm1.6l 2007], 2-49
Sheave, Cshft, 5-5
Sheave, Mach [Gm1.6l 2615rpm Fan], 3-69
Sheave, Mach [Gm1.6l], 2-49
Sheave, Mach [Mit 2615rpm Fan], 2-75
Shield, Heat, Gas/Lpg, Replmt, 2-53
Shield, Heat, Gas/Lpg, Replmt (Japan Only), 2-53
Shield, Heat, Lower [Mit 20/24m], 6-16
Shield, Heat, Upper [Mit 20/24m], 6-16
Shield, Manifold, Exhaust, 5-9
Shield, Starter [1.6l], 2-23
Shield, Tray, Drip [Mit 2013], 2-77
Shim Kit, 4-7
Shim, Washer, 0.88d 0.51b .020, 2-147
Shim, Washer, 0.88d 0.51b .060, 2-147
Shock Absorber, 2.3 Strk, 2-99
Shoe, Brake, 180 X 30mm, 2-93
Shoe, Plstc, Sqge, 14.0, 3-59, 3-61
Shrd Wldt,Fan,G/Lp, Replmt [M20/M30/T20], 2-59, 2-79
Shrd Wldt,Fan,G/Lp, Replmt [TJ] (Japan Only), 2-59, 2-79
Shroud Assy, Eng, 2-21
Shroud Wldt, Fan, 16.25d [Side X Side], 2-59
Shroud, Fan, 2-79, 3-69
Shroud, Front, Trimmed, 2-19
Shroud, Seat, 2-15
Skirt, Debris, Eng Radiator, 2-55
Skirt, Eng Fan, Gas / Lp, 2-59, 2-79
Skirt, Neo, .06, 06.38w 40.86l, 06 Hole, 1-1, 2-119
Skirt, Neo, .06, 06.85w 27.95l, 08 Hole, 1-1, 2-127, 2-131
Skirt, Neo, .06, 07.63w 51.52l, 11 Hole, 2-119
Skirt, Neo, .06, 12.00w 45.88l, 07 Hole, 1-1, 2-119
Skirt, Neo, .06, 26.99w 40.55l, 36 Hole, 2-119
Skirt, Neo, .12, 05.39w 14.01l, 02 Sl, 2-119
Skirt, Neo, .18, 10.37w 27.95l, 12 H&S, 1-1, 2-127, 2-131
Skirt, Rbr, .37, 04.50w 40.94l, 06 Hole, 1-1, 2-119
Sleeve, 0.31b 0.50d 0.3l, Ss, 2-129, 2-133, 2-143
Sleeve, 0.49b 0.68d 1.2l [304ss], 2-129, 2-133
Sleeve, Dashpo, Pump, Hyd, Gear, 4-5
Sleeve, Nyl, #37 05.0l, 2-91
Sleeve, Nyl, 2.38id 25.0l, 2-91
Sleeve, P/M, 0.31b 0.50d 0.3l [430ss], 2-139, 2-145
Sleeve, P/M, 0.31b 0.50d 0.7l [430ss], 2-123, 2-139, 2-145
Sleeve, P/M, 0.31b 0.50d 0.9l [430ss], 2-51, 2-53, 2-77, 2-113, 2-115
Sleeve, P/M, 0.34b 0.63d 0.6l, Bnz, 2-125
Sleeve, P/M, 0.34b 0.63d 1.2l, Bnz, 2-123
Sleeve, P/M, 0.37b 0.50d 0.6l [430ss], 3-11
Sleeve, P/M, 0.43b 1.00d 1.0l, Stl, 2-83
Sleeve, P/M, 0.47b 0.75d 0.5l [430ss], 2-117
Sleeve, Pump, Water, 4-3
Sleeve, Rbr, 3.50b 3.58d 1.8l, 3-5
Sleeve, Throttle, Plstc [Bosch], 2-31
Solenoid, #10, 12vdc, 4-13, 4-15, 4-17, 4-19, 4-21, 4-23
Solenoid, #8, 12vdc, 4-11, 4-13, 4-15, 4-17, 4-19, 4-21, 4-23
Solenoid, 12v, Valve, Hyd [Cec], 4-10
Solenoid, Pull, 12vdc, Damper, 2-107
Spacer, 3-7, 3-9
Spacer Plate, 4-8
Spacer, Alternator [Mit 2.0/2.4l], 6-20
Spacer, Belt, Balancer, Train, 6-11
Spacer, Coil, #8, 4-11, 4-21, 4-23
Spacer, Crankfshaft, 2-75
Spacer, Fan, 2-49
Spacer, Fan, Taper [2007], 2-49
Spacer, Fan, Taper [Mit 2013], 2-75
Spacer, Hub, Keyed, 3-7, 3-9
Spacer, Pad, Rbr, 2-121
Spacer, Plstc, Ny, 2-15
Spacer, Pump, Water, 2-75
Spacer, Ring, Throttle [Mit 40mm], 6-28
Spacer, Sppt, Fltr Lock Off, 2-31
Spacer, Sqge, Side Brush, Rbr, 3-9
Spacer, Strap, Adj, Alternator, 2-49
Spacer, Valve, Steering, 4-25
Sparkplug, 5-12
Sparkplug [Gm], 1-1
Sparkplug [Gm, 1pick=1plug], 1-1
Spool, Pilot, Dual, Hyd, 4-21, 4-23
Spool, Pilot, Hyd, 4-11, 4-13, 4-15, 4-17, 4-19, 4-21, 4-23
Spring, 4-5
Spring Kit, Scu [Cl], 4-25
Spring, 3/4 X 16 [Gm1.6L 2010 Lpg], 2-39
Spring, Cmpr, 0.9od .042wir 02.0l, 2-123
Spring, Cmpr, 18.8d, 1.6w, 57.1l, 2-17
Spring, Dsl, 1.00od 0.50id 1.7l, 2-125
Spring, Extn, 0.75od X 0.09wir, 2.5l, 2-129, 2-133
Spring, Extn, 0.75od X 0.12wir, 4.3l, 2-99
Spring, Extn, 0.88od X 0.14wir, 9.0l, 2-121
Spring, Extn, 2.00od 0.25wir 07.5l, 2-117
Spring, Flat, Retainer, Angled Screen, 2-103
Spring, Flt, 0.08th, 4.50w X 07.0l, 2-121
Spring, Keeper, 2-125
Spring, Motor, Hyd, 4-5
Spring, Tors, 0.75id .06wir 02.8coil, 2-95
Spring, Tors, 1.13id .12wir 02.3coil Rh, 2-95
Spring, Valve, 5-3
Spring, Valve, Relief, Oil Press, 5-7
Spring, Wir, 0.08d, Brake, Parking, 2-95
Spring, Wir, 0.16d, Brush Retaining, 2-5
Spring, Wir, 0.25d, Return, Brake, 2-93
Sprocket Assy, Cshft, 6-9
Sprocket, Camshaft, 5-11, 6-9
Sprocket, Crankshaft, 5-11
Sprocket, Cshft, 6-11
Sprocket, Pump, Oil, 6-9
Sprocket, Shaft, Balancer, 6-11
Squeegee Assy, Sba, Linatex, 1-2, 3-7
Squeegee Assy, Sba, Ure, 1-2, 3-7
Squeegee Kit, Rear, Replmt [M20/T20], 2-123
Squeegee Wldt, Rear, 2-123
Stand-Off, Hex, M8 X M8, Metal, 2-63, 2-65
Starter, 12vdc [Delco] (Mar. 2006 and Newer), 5-5
Starter, 12vdc [Gm] (Before Mar. 2006), 5-5
Starter, Motor [Mit 2.0/2.4l], 6-20
Steer-Control, Hyd#05, 06.1 2030 (See Breakdowns), 2-17
Steer-Control, Hyd05, 06.1 2030, 4-25
Stem, Valve, Hyd, 4-13, 4-15, 4-17, 4-19, 4-21, 4-23
Stem, Valve, Hyd [4w2p], 4-15, 4-17, 4-21, 4-23
Stem, Valve, Hyd, 4w2p, 4-11, 4-13, 4-19
Stop, Rotation, 2-125
Strainer, Hyd, 25gpm 100mesh Psi, 2-173
Strainer, Hyd, 025gpm 100mesh 03psi, 1-1
Strainer, Hyd, 25 Gpm 100 Mesh, 1-1
Strainer, Soltn, 20 Mesh, Cyl 3.5d 9.5l, 3-5
Strap, Adj, Alternator, 2-49
Strap, Door, Dump, 2-109, 2-111
Strap, Door, Dump, Side, 2-109
Strap, Mtg, Motor, .124.00W, 2-105
Strap, Mtg, Tank, Lpg, 2-87
Strap, Mtg, Tank, Lpg, Hinge, 2-87
Strap, Pyp, 0.07 1.0w 18.5l, W/ Buckle, 3-59

Strap, Rbr, Tie-Down, 2/Hooks 19.0l, 2-89
Strap, Retaining, Hose, 2-139, 2-145
Strap, Sppt, 2-99
Strap, Static, Afmkt, 2-119
Strap, Tank, Gas, 2-83, 2-85
Strip Mtg, Seal, 2-19
Strip, Flap, Recirculation, 2-119
Strip, Non-Slip, 0.50w 06.0l, 2-123
Strip, Rbr, 0.06 01.00W 04.0L, 2-105
Strip, Rbr, 0.06 03.54w 03.5l [Neo/60], 3-37
Strip, Rbr, 0.06 04.00w 05.0l Neo/60, 2-105
Stud, 6-5
Stud, .31-18 2.75l M8 X 1.25, Ss, 2-123
Stud, Ball, .39d .31-16, Gasspring, 2-15
Stud, M05-0.8, 2-35, 6-30
Stud, M10 X 1.50 [35], 2-49, 2-51, 2-53
Stud, M10-1.25 X 50, Full Thrd [Mit], 6-25
Stud, M8-1.25 X 30 [Mit Double End], 6-15
Stud, M8-1.25 X 35 [Mit Double End], 6-15
Stud, M8-1.25 X 40 [Mit], 6-16
Stud, M8-1.25 X 50 Full Thrd [Mit], 6-15
Stud, Manifold, Intake, M8 X 28, 6-16
Stud, Manifold, M8 X 28, 5-9
Stud, Manifold, M8 X 96, 5-9
Stud, Starter, M08 X 1.25, 5-5
Stud, Wheel, .50-20 X 1.50l, 0.370th, 2-91
Switch Assy, Press, 3.0, 17.5l Tube, 3-5
Switch Kit, Pump, Repair,, 4-27
Switch, Ignition [Ku], 2-13
Switch, Indicator, Oil Press, 2-23, 5-7
Switch, Indicator, Oil Press [2010], 2-23, 5-7
Switch, Press, 0006psi Dpdt, 2-23
Switch, Press, 10psi, Spst, 3-19
Switch, Press, 12vdc 08a Spst Nc 0070psi, 2-87
Switch, Press, 50 Psi, Pm02, 3-39
Switch, Press, Adj [4-16 In Wtr], 2-107
Switch, Press, Spdt 0008psi, 2-107
Switch, Rocker, Dpdt Mom/Off/Mom, 2-13
Switch, Rocker, Dpdt On/None/On, 3-63
Switch, Rocker, Dpdt On/Off/On, 2-13
Switch, Rocker, Spst, Mom, 3-37
Switch, Seat, 4-31
Switch, Seat, No [Delta 6440-04], 2-15
Switch, Snap, 15a No, Rlr, 2-101
Switch, Temp [160F], 2-105
Switch, Temp, Sealed, Nc, 2-105

T

Tank Kit, Soltn, W/ Bracket, Replmt, 2-135
Tank, Coolant, 03.30w 4.7hi 04.7l,1liter, 2-61
Tank, Coolant, 03.6w 04.1hi 05.5l,1liter, 2-61, 2-81
Tank, Coolant, 04.7 03.3 4.7deep, 1liter, 2-55
Tank, Detgt, Trimmed, 3-5
Tank, Fuel, 11.26Gal, gas, Replmt, 2-83
Tank, Fuel, 11.2gal, Gas, Replmt [2007], 2-85
Tank, Lpg, 33lb, W/ Gauge [Empty, Liq], 2-87
Tank, Recvy, Trimmed, 2-143
Tank, Soltn, W/ Label [M20], 2-135
Tensioner, 6-9
Tensioner, Timing, Belt, 6-11
Terminal, Bullet, Mal, .157d, 12ga, 3-49, 3-51, 3-52, 3-53
Terminal, Fem, Mp280, Sealed, 18-16ga, 4-27
Thermostat Kit, Coolant, Replmt [Mitsub], 6-22
Thermostat, W/ Hsng And Seal, 5-3
Thrust Bearing, 4-8
Thurst, Case, 6-5
Tie, Cable, 6.0l, 1.25d Max, 3-52, 3-53
Tie, Cable, 11.3l, 2.75d Max, 3-19
Tie, Cable, Nyl, 07.3l .19w 1.8 Max D, 2-13, 2-25, 2-27, 2-59, 2-91, 2-115, 3-19, 3-39, 3-52, 3-53
Tie, Cable, Nyl, 14.5l .30w 4.0 Max D, 4-29
Tie, Cable, Nyl, 15.3l . W 4.5 Max D, 3-19, 3-25, 3-33, 3-43
Tie, Cable, Nyl, 15.3L . W 4.5 Max D, 2-105
Tire Assy, Solid, 18.0x6.0 4.5bc/5bolt, 1-2
Tire, Drive, Scrbr, Non-Skid, 18.0X6.0, 2-91
Tire, Drive, Scrbr, Pu, Grey, 18.0X6.0 (Optional Polyurethane), 2-91
Tire, Idler, Scrbr, Blk, 16.0X3.5, 2-93
Tire, Idler, Scrbr, Non-Skid, 16.0x3.5 (Optional), 2-93
Tire, Idler, Scrbr, Pu, Grey, 16.0X3.5 (Optional Polyurethane), 2-93
Tower, Wldt, Lift, Lh, Replmt [M20], 2-7
Tower, Wldt, Lift, Rh, Replmt [M20], 2-7
Track Assy, Slide, 4-31
Transport Kit, Ci [M20/M30}, 3-65
Tray Wldt, Fuel, 2-83, 2-85
Tray Wldt, Lpg, 2-87
Tray Wldt, Perma-filter (Replaced By none), 2-105
Tray, Perma-Filter, 2-105
Tread, Non-Skid, 01.9w 08.0l, 2-7
Tread, Non-Skid, 02.2w 11.5l, 3-13
Tread, Non-Skid, 03.0w 11.6l, 2-7, 2-9, 2-97
Tube [Pcv], 5-3
Tube Assy, Plug, Drain, 2-143
Tube Kit, Hyd, Case Drain [M20/T20], 2-115
Tube Kit, Tank, Recvy, Replmt, 2-145
Tube Kit, Tank, Soltn, Replmt, 2-139
Tube Wldt, Arm, Safety, 2-101
Tube Wldt, Exhaust, Gas/Lpg, 2-51
Tube Wldt, Leg, Ohg, Lh, Pntd, 3-55
Tube Wldt, Leg, Ohg, Rh, Pntd, 3-55
Tube Wldt, Plug, Drain, 2-143
Tube Wldt, Tee, 2-41, 2-43, 2-45, 2-47
Tube Wldt, Tee [Mit 2013], 2-71, 2-73
Tube Wldt, Torque, 2-117
Tube, 0.50d 0.32b 00.4l, Ss, 2-139, 2-145
Tube, 00.38d 00.26b 00.3l Stl Plt, 2-97
Tube, 00.50d 00.38b 00.6l Stl, 2-99
Tube, 2.90id 3.00od 02.4l, Ss, 2-139, 2-145
Tube, Acrylic, Hose, Pinch, 2-145
Tube, Air Bleed, .62d 2.2l .12npt Alm, 2-25, 2-32
Tube, Bleed, Air, .62od 2.2l .12npt, Alm, 2-27, 2-37
Tube, Coolant, 1.3d, Lower, 2-61
Tube, Coolant, 1.3d, Lower [Mit 2013], 2-81
Tube, Coolant, Lower, 1.3d, 2-55
Tube, Cooling, Line [Mit], 6-23, 6-26
Tube, Distribution, Water, 2-141
Tube, Ds, 5-8
Tube, Exhaust, 1.5d, 2-51
Tube, Exhaust, Flng, 1.5d [M20/T20 2007], 2-53, 2-77
Tube, Hyd, 08 Jf08/Jf08, 3-15
Tube, Hyd, 08 Jf08/Jm08, 2-113
Tube, Hyd, Brush Return, W/ Cd [M20/T20], 2-115
Tube, Hyd, Main Return, 2-171
Tube, Hyd, Main Return [G/Lp Mit2013], 2-171
Tube, Hyd, Rear Sqge [M20], 2-171
Tube, Hyd, Sqge, 2-171
Tube, Hyd, Swp, 2-175
Tube, Pump, Water, 6-22
Tube, Pvc, Clr, 4.0l [Shc80], 3-23, 3-25
Tube, Rnd, 1.75d 0.77b 01.1l, Stl, Pntd, 2-91
Tube, Transition, Casting, 2-151
Tube, Vacuum, 2-107
Tube, Vinyl, Pump, Water, 4-3
Tube, Wand, Vacuum, Metal, 3-61
Tube, Wand, Vacuum, Metal [1pick=1box], 3-59
Tube, Water, Line [Mit], 6-22
Tubing Connctr.Kit, Gorman Pmp, 4-26

U

Upper Hsg Kit, Pump, Repair,, 4-27

V

Valve Assy [Proportional], 4-17, 4-23
Valve Assy, Relief [Cl], 4-25
Valve Assy, Water, Solenoid , 12vdc, 2-141
Valve Assy, Water, Solenoid, 12vdc, 3-13, 3-43
Valve Kit, Poppet, Gorman Rupp, 4-26
Valve Stem, N.O.Valve, Hyd, 4-10
Valve, Ball, 04pf, Chm W/ Handle, 2-83
Valve, Body, Throttle, Lpg, 2-32

Valve, By-Pass, Oil Fltr, 5-8
Valve, Check, 2-31, 4-11, 4-13, 4-15, 4-17, 4-19, 4-21, 4-23
Valve, Check, 0002psi [FaST Ii+], 4-32
Valve, Check, 0002psi Bm04/Bm04, 3-21
Valve, Check, 0005psi [FaST Ii+], 4-32
Valve, Check, 0005psi Bm06/Bm08, 3-29
Valve, Check, 0005psi Pm04/Bm06, 3-39
Valve, Check, 2gpm .5psi Bm08/Bm08, 3-43
Valve, Check, Pump, Water, 4-3
Valve, Cntrl, Hyd, 4-19
Valve, Cntrl, Hyd (See Breakdowns), 2-175
Valve, Cntrl, Hyd [M20 And T20] (Replaced by 1037805), 4-13
Valve, Cntrl, Hyd [M20 And T20] (See Breakdowns), 3-15
Valve, Cntrl, Hyd [M20], 4-11
Valve, Cntrl, Hyd [M20] (See Breakdowns), 2-175
Valve, Cntrl, Hyd, Solenoid, 03/16gpm, 4-15, 4-17
Valve, Cntrl, Hyd, Solenoid, 03/16gpm (See Breakdowns), 3-15
Valve, Cntrl, Hyd, Solenoid, 12vdc 10gpm, 4-23
Valve, Cntrl, Hyd, Solenoid, 12vdc 10gpm (See Breakdowns), 2-177
Valve, Cntrl, Solenoid, 4-11, 4-21, 4-23
Valve, Exhaust, 5-3, 6-9
Valve, Fuelock, Lpg, Wire Connector, 2-31
Valve, Gasket, Pcv, 6-4
Valve, Hyd Cartridge 10no/-0, 4-10
Valve, Hyd, Check, Jm08/Om08 5000psi, 3-15
Valve, Hyd, Relief, 4-11
Valve, Hyd, Solenoid 12vdc 3000psi (See Breakdowns), 3-15
Valve, Hyd, Solenoid, 12vdc, 4-21
Valve, Hyd, Solenoid, 12vdc (See Breakdowns), 2-177
Valve, Inlet, 6-9
Valve, Intake, 5-3
Valve, Lock Off, 2-37
Valve, Lock Off [Gm 1.6L 2010], 2-39
Valve, Lpg, Press Relief [Rego], 2-87
Valve, Motor, Hyd, 4-5
Valve, Pcv, 6-4
Valve, Relief, 4-13, 4-15, 4-17, 4-19, 4-21, 4-23
Valve, Relief, 0600Psi, 2-177
Valve, Relief, 3000 Psi, 4-7
Valve, Relief, 4000 Psi, 4-7
Valve, Relief, Oil Press, 5-7
Valve, Seal, Stem, 6-9
Valve, Shutoff, 3-63
Valve, Solenoid, 12vdc, Water Flow, 3-25, 3-33
Valve, Spring, 6-9
Valve, Spring, Lock, 6-9
Valve, Spring, Retainer, 6-9
Valve, Spring, Seat, 6-9
Valve, Stem, No, 4-13, 4-15, 4-17, 4-19, 4-21, 4-23
Valve, Trim, Fuel, Normal Flow, 2-32
Valve, Vent, Air, Float Type, 3-39
Valve, Water, 12vdc, 6.0mm, 04pf, 3-19
Valve, Water, Solenoid, 12vdc 0.08pf, 3-3
Valve, Water, Solenoid, 12vdc 6.0mm Pf04, 3-29
Video, Oprtr, Dvd [W/Checklist M20], 3-71

W

Wand Kit, Vacuum, Ci [M20], 3-59, 3-61
Wand, Clean-Out, 3-63
Washer, 6-9, 6-21
Washer, 1/4 Flat [Mit], 6-27
Washer, Belleville, .31, 2-99
Washer, Belt, Balancer, Train, 6-11
Washer, Bolt, 6-7
Washer, Flat 3/8, Sae, 6-17
Washer, Flat, .781b 1.63od .16, Stl, Blk, 2-91
Washer, Flat, .78b 1.75d .18, Ss, 2-143
Washer, Flat, #06, 2-55, 2-105
Washer, Flat, #08, 2-15
Washer, Flat, #10, 2-15, 2-21, 2-49, 2-89, 2-101, 3-63
Washer, Flat, #10 Ss, 2-99
Washer, Flat, #10, Ss, 2-25, 2-31, 3-3, 3-19, 3-25, 3-63, 3-67
Washer, Flat, 0.25 Fender, 2-151
Washer, Flat, 0.25 Fendr, 2-15
Washer, Flat, 0.25 Sae, 2-15, 2-17, 2-25, 2-31, 2-41, 2-45, 2-51, 2-55, 2-83, 2-105, 2-107
Washer, Flat, 0.25 Std, 2-23, 2-55, 2-89, 2-95, 2-97, 2-99, 3-19, 3-21
Washer, Flat, 0.25, Fendr, 2-56, 2-59, 2-79
Washer, Flat, 0.25, Sae, 2-27, 2-29, 2-35, 2-53, 2-59, 2-77, 2-85, 2-87, 2-151, 3-37, 3-69
Washer, Flat, 0.25, Ss, 2-105, 2-109, 2-111, 2-119, 2-141, 2-143, 3-65
Washer, Flat, 0.25, Std, 2-9, 2-23, 2-27, 2-29, 2-35, 2-37, 2-59, 2-67, 2-69, 2-77, 2-79
Washer, Flat, 0.25b 0.56d .05, Pl, 10, 2-15
Washer, Flat, 0.27B 0.69D .05, Ss, 2-5, 2-136, 3-29, 3-37, 3-57, 3-65
Washer, Flat, 0.31 Sae, 2-9, 2-15, 2-21, 2-49, 2-99, 2-129, 2-133, 2-135, 2-139, 2-145
Washer, Flat, 0.31, Hardened, 2-49
Washer, Flat, 0.31, Sae, 2-49, 2-75, 2-77
Washer, Flat, 0.31, Ss, 2-51, 2-55, 2-105, 2-109, 2-111, 2-119, 2-121, 2-123, 2-125, 2-129, 2-133, 2-139, 2-145, 3-3, 3-7, 3-11
Washer, Flat, 0.31, Std, 2-7, 2-9, 2-15, 2-17, 2-19, 2-41, 2-43, 2-45, 2-47, 2-49, 2-53, 2-55, 2-59, 2-61, 2-71, 2-73, 2-75, 2-79, 2-81, 2-83, 2-85, 2-87, 2-91, 2-95, 2-113, 2-115, 2-117, 2-119, 2-139, 2-143, 2-145, 2-171, 2-175, 3-11, 3-13, 3-15, 3-55, 3-65, 3-69
Washer, Flat, 0.32b 1.00d .12, Ss, 2-9, 2-15, 2-21, 2-75, 2-103, 2-109, 2-111, 2-135, 2-139, 2-143, 2-145, 2-147, 2-149, 2-175, 2-177, 3-5, 3-21, 3-29, 3-37, 3-47, 3-49, 3-51, 3-63
Washer, Flat, 0.34b 0.75d .12 [Viton], 3-19
Washer, Flat, 0.38 Sae, 2-23, 2-49, 2-63, 2-65, 2-99, 2-117, 2-125, 2-151, 2-169
Washer, Flat, 0.38 Std, 2-7, 2-15, 2-83, 2-87, 2-99, 2-107, 2-171, 3-7, 3-9, 3-55, 3-59, 3-67
Washer, Flat, 0.38, Hardened, 2-23, 2-37, 2-39
Washer, Flat, 0.38, Sae, 2-49, 2-53
Washer, Flat, 0.38, Std, 2-53, 2-59, 2-77, 2-79
Washer, Flat, 0.38b 0.88d .08, Ss, 2-53, 2-61, 2-77, 2-149
Washer, Flat, 0.38b 1.25d .12, Neo, 2-103, 2-109, 2-111
Washer, Flat, 0.40b 1.12d .12, Ss, 2-151
Washer, Flat, 0.40b 1.12d .12, Ss, 2-49, 2-55, 2-59, 2-79, 2-105, 2-109, 2-111, 2-125, 2-147, 3-55
Washer, Flat, 0.41b 1.25d .12, Pye, 2-15
Washer, Flat, 0.44b 1.00d .08, Ss, 2-7, 2-101, 2-121, 3-13
Washer, Flat, 0.50 Sae, 2-17, 2-23, 2-55, 2-63, 2-65, 2-93, 3-11
Washer, Flat, 0.50 Std, 2-23, 2-63, 2-65
Washer, Flat, 0.50, Sae, 2-107
Washer, Flat, 0.50, Std, 2-23
Washer, Flat, 0.53b 1.88d .12, Stl, Pl, 2-9, 2-23, 2-63, 2-65, 2-121, 2-123
Washer, Flat, 0.56b 1.38d .11, Ss, 2-117, 2-121, 2-129, 2-133
Washer, Flat, 0.62 Sae, 2-19
Washer, Flat, 0.66b 1.00d .12, Rbr, 3-3, 3-63
Washer, Flat, 0.69b 1.19d .06, Stl, Pl, 2-125
Washer, Flat, 0.75 Sae, 2-91
Washer, Flat, 0.76b 1.50d .06, Ss, 2-93
Washer, Flat, 0.79b 1.18d .06, Nyl, 2-139, 2-145
Washer, Flat, 0.81b 1.06d .06, Stl, 2-55, 2-59, 2-79
Washer, Flat, 06, 3-61
Washer, Flat, 08, 3-37
Washer, Flat, 08, Ss, 4-29
Washer, Flat, 1.15b 1.75d .08, Stl, 2-13
Washer, Flat, 1.26b 1.88d .13, Stl, 3-13
Washer, Flat, 1.26B 1.88D .13, Stl, Pl, 2-7, 2-107
Washer, Flat, 1.39b 2.12d .13, Stl, 2-91

Washer, Flat, 10, 3-37, 3-47, 3-49, 3-51, 3-52, 3-53
Washer, Flat, 10, Ss, 3-29, 3-33, 3-43, 3-57
Washer, Flat, 2.16b 3.50d .16, Felt, 2-91
Washer, Flat, Belleville, .25, 2-129, 2-133
Washer, Flat, Belleville, .31, 2-49, 2-75, 2-139, 2-145, 2-147, 3-11
Washer, Flat, Belleville, .38, 2-53, 2-99, 2-121, 2-129, 2-133
Washer, Flat, Belleville, .50, 2-129, 2-133, 2-149
Washer, Flat, Belleville, M10, 2-103
Washer, Flat, M21.0b X 37d X 3, 2-93
Washer, Flat, Pump, Hyd, 4-7
Washer, Lock, 0.38, 6-17
Washer, Lock, Int-Ext, 0.31, 2-119
Washer, Lock, Int-Ext, 0.38, 2-49
Washer, Lock, Int-Ext, 10, 2-21
Washer, Lock, Int, #06, 2-105
Washer, Lock, Int, #08, Ss, 2-107
Washer, Lock, Int, #10, Ss, 3-19
Washer, Lock, Int, 0.25, 3-37
Washer, Lock, Int, 0.38, 2-49
Washer, Lock, Int, 08, Ss, 4-29
Washer, Lock, M12 [Mit], 6-18
Washer, Lock, M6 [Mit], 6-28
Washer, Lock, M8 [Mit], 6-9, 6-21
Washer, Pump, Hyd [En], 4-7
Washer, Rbr, 4-3
Washer, Sealing, 0.28b 0.75d Ss, Neo, 2-143
Washer, Sheave, Cshft, 5-5
Washer, Shld, Nyl [8-32], 2-13
Washer, Special, 6-10
Washer, Spring, 6-13
Washer, Sprkt, Camshaft, 5-11
Washer, Star, M10 [Mit], 6-25
Washer, Strainer, 6-7
Washer, Thrust, 0.34b 1.50d .06, 2-139, 2-145
Washer, Thrust, 0.61b 1.25d .06, Fgl, 2-125, 2-127, 2-129, 2-131, 2-133, 3-7
Washer, Thrust, 1.00b 1.75d 0.13w, Fbr, 3-11
Weight, Eccentric, 2-105
Wheel, 06.0D 2.00W 1.19B, Gray Rbr, 2-7, 2-107, 3-13
Wheel, 3.0d 1.38w 0.50b, 1-1, 2-125
Wheel, 4.0d 0.89w 0.64b, 2-123
Wheel, Steering, 14.3d 0.81b 36tooth, 2-17
Wire Set, Sparkplug [1.6l], 5-12
Wire, 10ga 16.0l Blk .25ring /.38ring, 2-49
Wire, 16ga 09.6l Brown Mp280/ #10ring, 2-23
Wire, Tie [W/.25” Fir Tree Clip], 2-7