IPC
BY TENNANT COMPANY

BP6-2
BP10-2

Backpack Vacuums

Operator Manual

Read this manual carefully before carrying out any work on the machine

IPC North America

To view, print or download the parts manual, visit:
www.ipcworldwide.com/us/service-manuals/

Backpack Vacuum
QUICK START GUIDE

IPC BY TENNANT COMPANY

Included Components

1. 2 piece 2 bend wand
2. Ultimate paper bag
3. 3" Round horse hair dust brush
4. 14" Nylon floor brush
5. 14" Scalloped floor tool
6. 4" Upholstery tool
7. 11" Crevice tool
8. 50' Extension cord

Filter assembly for four level filtration

User maintenance

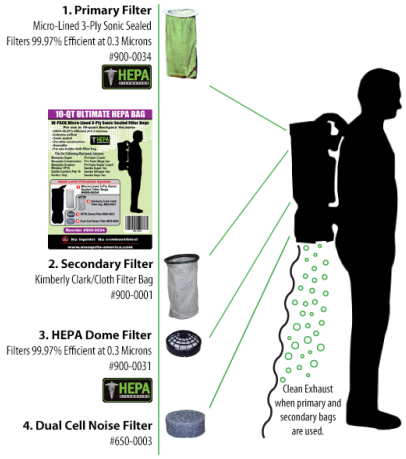

SETUP

1 Switch

Make sure switch is off.

2 Cord Retainer

Cord installed in cord retainer.

3 Wand

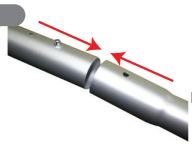

Aluminum wand; assembled with button connector.

4 Floor tool

Loosen ring nut tighten tool can rotate.

5 Hose Cuff

Connects to wand.

6 Power / Plug

Plug into standard outlet.

7 Shoulder & Waist belt

Shoulder & Waist belt, loosen all straps.

8 Weight distribution

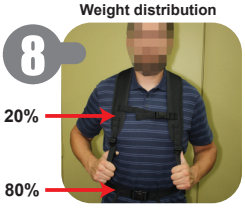

Tighten the waist belt so 80% of the vacuum weight is on your hips. The remaining weight is on the shoulders. The shoulder straps should be fairly loose.

9 Load tools

Tools can be carried on the elastic straps.

10 Center straps

Attach center strap if desired.

OPERATION

Vacuuming with Standard tools

11

Good for medium to heavy debris.

Vacuuming with Sidewinder tools

12

Faster vacuuming by 40% for medium to light debris.

STORAGE

1. Disconnect.
2. Wrap the cord.
3. Place off of the floor.
4. Install new disposable bag if needed.
5. Make sure switch is in off position.

Storage

13

CAUTION

No

Water

No

Hot Particles

No

Airborne particles are dangerous

No

Hanging Cords

Pigtail may fail over extended use if the cord retainer is not used.

MAINTENANCE

Yes

Always install the extension cord into the support slot. This will eliminate cord related repairs.

Motor brush replacement

Replace motor brushes when worn. Or (approx. 700 hours)

Backpack Vacuum

FILTER USE

DISPOSABLE FILTER BAG REQUIRED

Thank you for your purchase of our HEPA Back-Pack Vacuum. We appreciate your business. Please read the important information below regarding the proper use of our filter system. It is our concern for your health and reliabiliity of our equipment that we have produced the information below.

The primary filter (first filter) is the most important filter, as it filters 99.97% of particles. Failure to use this primary filter will cause damage to the secondary HEPA filter, vacuum motor and allow fine particles into the air.

Feel free to contact us should you have any questions regarding the proper use of filters or your HEPA Back-Pack Vacuum.

Back-Pack vacuums are designed for 4 filters to be used in unison.

PROPER AND IMPROPER USE OF THE FILTER SYSTEM:

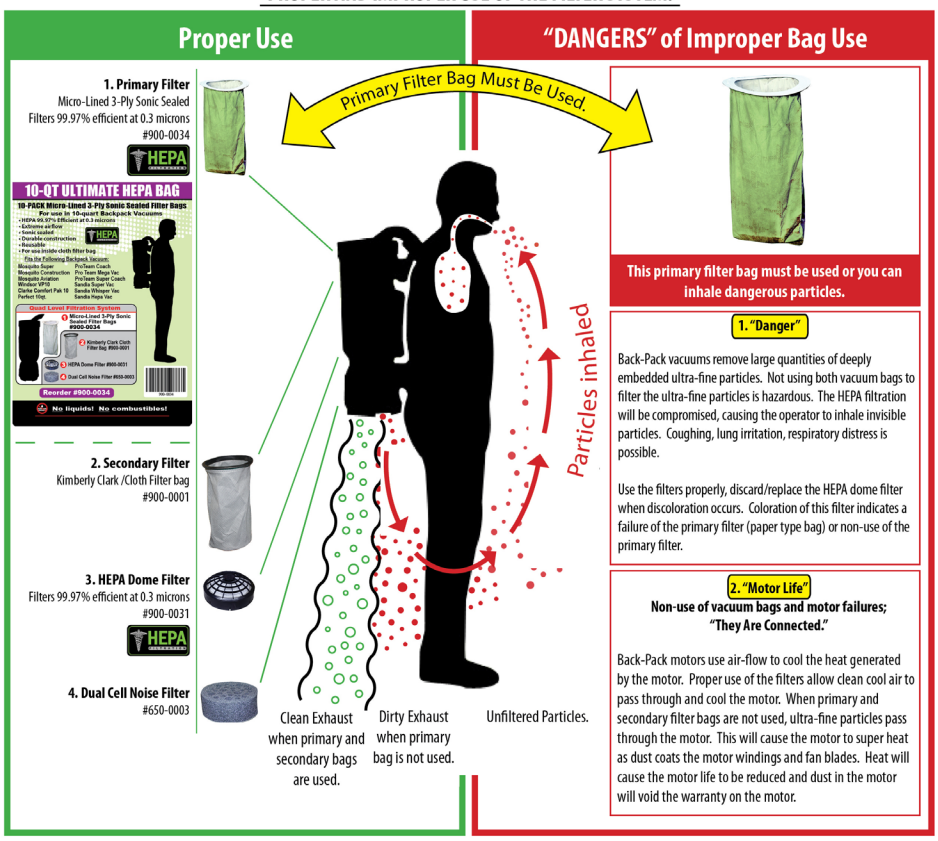

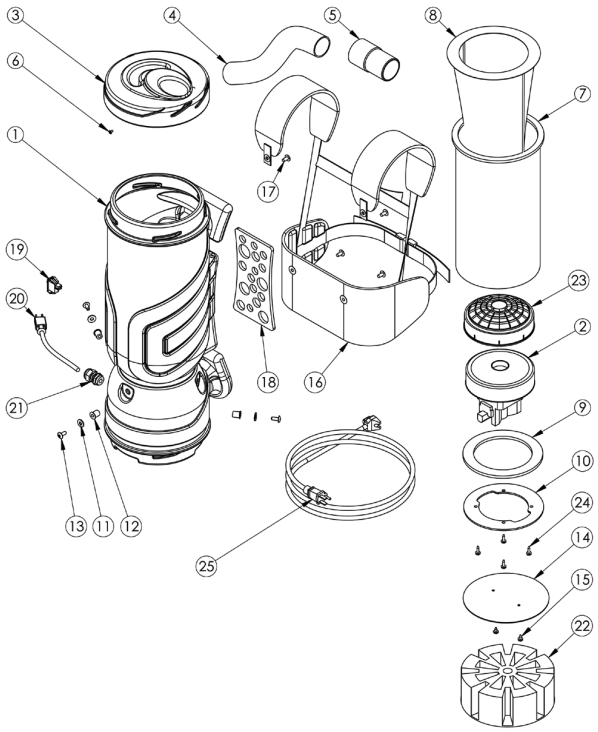

Backpack Schematic Parts Breakdown

Drawing #	Part #	Description	Qty. Used
1	700-BP10B	Backpack Housing (body)	1
2	500-0013 500-0003 500-0004 501-0001	XLT Motor Super Motor Construction Motor Aviation Motor	1
3	700-BP10L	Lid	1
4	200-0010	Vacuum hose (4ft x 1-1/2in)	1
5	900-0010	Hose Cuff - Swivel	1
6	100-0003	Rivet/Screw (Hose to lid)	1
6a	100-0002	Tee Nut (not pictured)	1
6b	100-0004	#8 Black Zinc Washer (not pictured)	1
7	900-0001	Cloth Bag w/ Gasket	1
8	900-0034	Paper Filter Bag	1
9	650-0002	Gasket (motor to housing)	1
10	600-0004	Mounting Ring for Motor	1
11	100-0001	Well Nut Washer	3
12	100-0022	Well Nut	3
13	100-0011	Screw for Well Nut	3
14	600-0001	Motor Finger Guard	1
15	100-0030	#10 x 5/8" Hex Tapping Screw	2
16	800-0005	Shoulder and waist Belt	1
17	100-0010	Screw for Shoulder and waist Belt	4

18	650-0001	Backrest Pad	1
19	400-0004	On/Off Rocker Switch	1
20	400-0001	Pigtail Cord w/ Connectors	1
21	400-0005	Strain Relief	1
21b	400-0006	Nut for Strain Relief	1
22	650-0003	Dual Cell Exhaust Filter	1
23	900-0031	HEPA Dome Motor Filter	1
24	100-0028	Screw - Motor to Mounting Plate	4
25	400-0003	50 ft. Extension Cord	1

Backpack Schematic Parts Breakdown

Part #	Description	Qty. Used
900-0009	4" Upholstery Tool	1
900-0005	14" Scalloped Floor Tool	1
900-0008	7" Crevice Tool	1
900-0028	56" Aluminum 2-piece 2-Bend Wand	1
900-0007	3" Round Dust Brush	1
900-0006	14" Nylon Bristle Floor Tool	1

Dear Customer:
Congratulations on the purchase of your new Backpack Vacuum. As the world of carpet and upholstery cleaning evolves, we set out to be on the cutting edge of quality, simplicity, durability, technology and performance.

Before using your new machine, please read this manual thoroughly. This machine will afford you many years of trouble-free operating satisfaction, provided it is given proper care and maintenance. Should you have any questions regarding replacement parts, ordering parts or warranty issues, please contact your distributor or service center.
Thank you!

Grounding Instructions
This machine must be grounded. If it should malfunction or break-down, grounding provides a path of least resistance for electrical shock. This machine is equipped with a cord having an equipment grounding conductor and grounding plug. The plug must be plugged into an appropriate outlet that is properly installed in accordance with all local codes and ordinances. Do not remove ground pin; if missing, replace plug before use.

Improper installation of the equipment-grounding conductor can result in a risk of electric shock. Be sure to check with a qualified electrician or service person if you are in doubt as to whether the outlet is properly grounded. If the plug will not fit in the outlet do not modify either the plug or the machine's cord, instead have a proper outlet installed by a qualified technician.

This machine is for use on a nominal 120-volt circuit and with a grounding plug similar to the one in Figure 1 below. If a proper outlet is not available, follow the illustrations of Figure 2 & 3 to install a temporary-grounding plug. This temporary work-around should be used only until a proper outlet (Figure 1) can be installed by a qualified electrician. When and if this type of adapter is employed, screw the adapter's extended tab into place with a metal screw. However, grounding adapters are not approved for use in Canada. Again, be sure to check the grounding pin for damages and replace if necessary. The Green, or Green-Yellow, wire in the cord is the grounding wire. When replacing a plug, this wire must be attached to only the grounding pin.

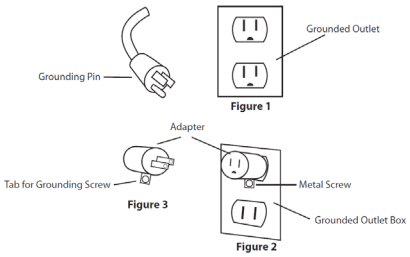

SAFETY, OPERATIONS AND MAINTENANCE
Save These Instructions
Read and follow all warnings and cautions before using this vacuum. This unit is intended for commercial use. This vacuum will afford you many years of trouble-free operating satisfaction, provided it is given proper care. All parts have passed rigid quality control standards prior to their assembly to produce the final product. Prior to packaging, your vacuum was again inspected for assurance of flawless assembly.

This vacuum is protectively packed to prevent damage in shipment. We recommend that upon delivery, you unpack the units and inspect it for any possible damage. Only a visual examination will reveal damage that may have occurred. If damage is discovered, immediately notify the transportation company that delivered your vacuum. As a shipper, we are unable to report any claim for damage. You must originate any claim within 5 days.
IMPORTANT SAFETY INSTRUCTIONS WARNING:
Electric shock may occur if used on wet surfaces. This vacuum is for dry use only. DO NOT expose to rain. Store indoors. To reduce the risk of fire, electric shock or injury.

1. DO NOT leave appliance when plugged in. Unplug from outlet when not in use and before servicing.
2. DO NOT use on wet surfaces.
3. DO NOT allow to be used as a toy. Close attention is necessary when used by or near children.
4. Use only as described in this manual. Use only manufacturer's recommended attachments.
5. DO NOT use with damaged cord or plug. If appliance is not working as it should, has been dropped damaged, left outdoors, or dropped into water, return it to a service center.
6. DO NOT pull of carry by cord, use cord as handle, close a door on cord, or pull cord around sharp edges or corners. Do not run appliance over cord. Keep cord away from heated surfaces.
7. DO NOT unplug the vacuum by pulling on the cord. Turn plug, grasp the plug, not the cord.
8. DO NOT handle plug or appliance with wet hands.
9. DO NOT put any object into openings. Do not use with any opening blocked; keep free of dust, lint, hair, and anything that may reduce air flow.
10. Keep hair, loose clothing, finger and all parts of the body away from spinning and moving parts.
11. DO NOT pick up anything that is burning or smoking, such as cigarettes, matches, or hot ashes.
12. DO NOT use without cloth filter bags, paper filter bag and all other filters in place.
13. DO NOT use to pick up flammable or combustible liquids, such as gasoline, or use in areas where they may be present.
14. DO NOT use where oxygen or anesthetics are used.
15. The extension cord provided with this unit is 50ft, #16, 3-wire and MUST be used with this unit to insure grounding protection.

BACKPACK VACUUM TROUBLE SHOOTING GUIDE

CAUTION: Always disconnect power cord before servicing.
WARNING: Repairs should only be performed by an authorized service center.

PROBLEM: Loss of suction.

CAUSE:	SOLUTION:
1. Cap is damaged.	1. Inspect and replace if needed.
2. Faulty vacuum motor.	2. Call manufacturer or service center.
3. Full paper filter bag.	3. Replace paper filter bag.
4. Clogged hose or wand.	4. Remove obstruction.
5. Loose or broken fan.	5. Contact manufacturer or service center

PROBLEM: Motor is not running.

CAUSE:	SOLUTION:
1. Faulty ON/OFF switch.	1. Contact manufacturer or service center.
2. Power cord defective	2. Contact manufacturer or service center.
3. Loose connection or wiring.	3. Contact manufacturer or service center.
4. Motor defective.	4. Contact manufacturer or service center.
5. Blown fuse or tripped circuit breaker.	5. Replace fuse or reset circuit breaker.

PROBLEM: Dust blowing from vacuum when running.

CAUSE:	SOLUTION:
1. Full paper filter bag.	1. Replace filter bag.
2. Paper filter bag not installed properly.	2. Reinstall or replace.
3. Cloth filter bag dirty.	3. Clean cloth filter bag
4. Cloth or paper filter bag is torn.	4. Replace

WARRANTY: Lifetime on Body, 7-years on motor & electrical.
Return Material Authorization (RMA) Procedure.

It is the responsibility of an Authorized Service Center or Distributor with written authorization to ensure the equipment is repaired as soon as possible.

Only the manufacture, authorized dealers or service centers (with written authorization) may make repairs or replace parts on this machine. All others do so at their own risk and expense, and will void their manufacturer's warranty. The authorized distributor or service center must contact the manufacturer and follow standard RMA procedures. Prior to working on the machine or changing out any parts, the manufacture must be contacted and provide written authorization to approve labor, replacements parts, etc.

If the machine falls within the given warranty period, Distributor/Service Center will fill out an RMA/ Warranty claim form. *This form will serve as the repair order to replace defective parts and labor time approval.*

DO NOT send parts/machines back to the Manufacture without an RMA sheet and approval.

All defective parts must be returned to manufacture (unless advised otherwise by manufacture) with a copy of the RMA form for evaluation at the customer's expense. All warranty claims are subject to review by the manufacture to determine if warranty will be approved. No labor or parts will be covered if not previously approved by the manufacturer. Any credit for parts/labor will only be issued upon evaluation and approval from manufacturer.

When warranty is approved, the Distributors/Service Centers account will be credited for the replacement part/labor. Manufacturer will ship the warranted replacement part(s) to the distributor. If warranty is denied, the Distributor's account will not be credited for any parts sent on the claim.