M20
(Diesel)

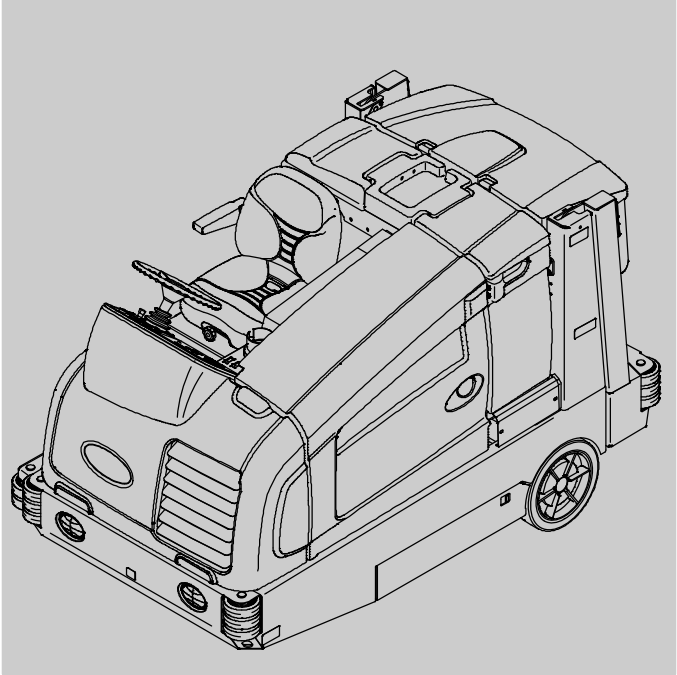

Scrubber–Sweeper Parts Manual

Foam Scrubbing Technology

The Safe Scrubbing Alternative®
ES® Extended Scrub System
Tennant*True®* *Parts*
Hygenic® Fully Cleanable Tanks
FloorSmart® Integrated Cleaning System
IRIS® a Tennant Technology

An ORBIO™ Technology

North America / International

For the latest Parts manuals and other language Operator manuals, visit:

www.tennantco.com/manuals

331411
Rev. 19 (5-2016)

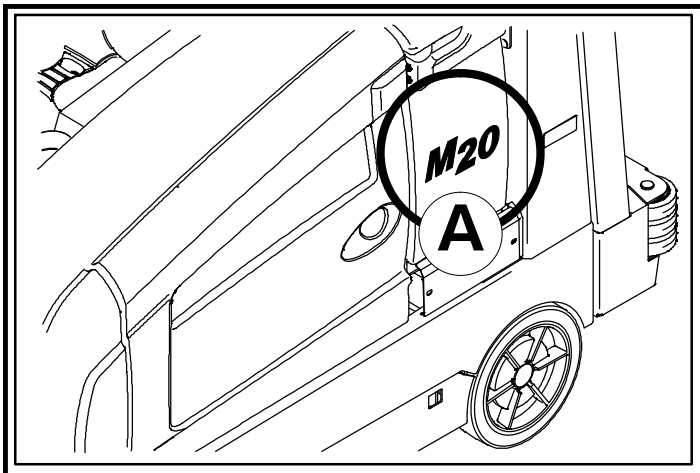

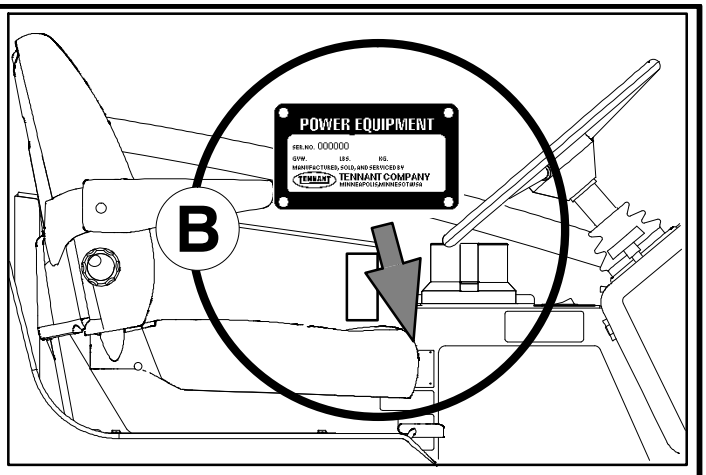

Ref	Part No.	Serial Number	Description	Qty.
1	82681	(000000–)	Bracket Wldt, Lpg Mount	1
▽ 2	63810	(000000–)	Latch Assy, Lpg Tank Mtg, W/Nut	4
▲ 3	51839	(000000–)	Nut Adjustable, Lpg Tank Mtg	2
4	49263	(000000–)	Tie, Cable	3
5	82556	(000000–001039)	Bracket, Vaporizer	1
6	54930	(000000–)	Vaporizer, LPG	1

D

C

EN

HOW TO ORDER PARTS – See diagram above

Only use TENNANT Company supplied or equivalent parts. Parts and supplies may be ordered online, by phone, by fax or by mail.

Follow the steps below to ensure prompt delivery.

1. **(A)** Identify the machine model.
2. **(B)** Identify the machine serial number from the data plate.
3. **(C)** Ensure the proper serial number is used from the parts list.
4. Identify the part number and quantity. Do not order by page or reference numbers.
5. Provide your name, company name, customer ID number, billing and shipping address, phone number and purchase order number.
6. Provide detail shipping instructions.

(D) ▽ – Identifies an assembly
▲ – Identifies parts included in assembly

Please fill out at time of installation for future reference.

Model No. – _____

Serial No. – _____

Machine Options – _____

Sales Rep. – _____

Sales Rep. phone no. – _____

Customer ID Number – _____

Installation Date – _____

Tennant Company
PO Box 1452
Minneapolis, MN 55440
Phone: (800) 553–8033 or (763) 513–2850
www.tennantco.com

Thermo–Sentry, Touch–N–Go, 1–STEP, Clean–Wedge, Variable Drain Valve, EasyOpen, Grip–N–Go, MaxPro2, Dura–Track, SmartRelease, InstantAccess, Duramer, FaST–PAK, ErgoSpace and Lower Total Cost of Ownership are trademarks of Tennant Company.

Specifications and parts are subject to change without notice.

Original Information, copyright © 2006 – 2016 TENNANT Company, Printed in U.S.A.

CN

如何订购部件 – 参见下表

仅使用 TENNANT 公司提供的或同等部件。部件和供应可以在线订购，通过电话、传真或邮件订购。

请遵循下面的步骤确保及时交付。

1. (A) 确定机器型号。
2. (B) 从数据标签确定机器序列号。
3. (C) 确保使用部件列表中的正确序列号。
4. 确定部件号和数量。
   不要按页面或参考编号订购。
5. 提供您的姓名、公司名称、客户 ID 号、付帐和送货地址、
   电话号码和采购单编号。
6. 提供详细的送货说明。

(D) ▽ – 确定组件
▲ – 确定组件中包含的组件

请在安装时填写供未来参考。

型号 – _____

序列号 – _____

机器选项 – _____

销售代表- _____

销售代表电话号码 – _____

客户 ID 编号 – _____

安装日期 – _____

ES

CÓMO SOLICITAR PIEZAS – Consulte el diagrama anterior.

Utilice sólo las piezas suministradas por TENNANT Company o piezas equivalentes. Puede solicitar las piezas a través de internet, por teléfono, por fax o por correo.

Siga los siguientes pasos para que la entrega sea rápida.

1. **(A)** Indique el modelo de máquina.
2. **(B)** Indique el número de serie de la etiqueta de datos.
3. **(C)** Asegúrese de que indica el número de serie correcto de la lista de piezas.
4. Indique la cantidad y el número de la pieza.
   No realice el pedidoindicando el número de página o el de referencia.
5. Incluya su nombre, el nombre de la empresa, el ID de cliente,
   las direcciones de envío y facturación, el número de teléfono y el número del pedido de compra.
6. Facilite instrucciones de envío.

(D) ▽ – identifica un conjunto
▲ – identifica piezas de un conjunto

Rellene estos datos cuando realice la instalación para utilizarlos como referencia en el futuro.

Nº modelo – _____

Nº serie – _____

Opciones de la máquina – _____

Vendedor – _____

Nº teléfono vendedor – _____

Nº cliente – _____

Fecha de instalación – _____

FR

COMMENT COMMANDER DES PIÈCES DÉTACHÉES – Voir le schéma ci-dessus.

Utilisez uniquement des pièces fournies par la société TENNANT ou équivalentes. Les pièces et fournitures peuvent être commandées en ligne, par téléphone, fax, ou par courrier.

Suivez les étapes ci-dessous pour assurer une livraison rapide.

1. **(A)** Identifiez le modèle de la machine.
2. **(B)** Identifiez le numéro de série de la machine, à partir de l'étiquette signalétique.
3. **(C)** Assurez-vous que le numéro de série correct est utilisé à partir de la liste de pièces détachées.
4. Identifiez le numéro de pièce et la quantité. Ne commandez pas par page ou numéros de référence.
5. Fournissez votre nom, le nom de votre société, votre numéro d'identification de client, l'adresse de facturation et d'expédition, le numéro de téléphone et le numéro du bon de commande.
6. Fournissez des instructions d'expédition détaillées.

(D) ▽ – identifie un assemblage
▲ – identifie les pièces composant l'assemblage

A remplir au moment de l'installation à titre de référence.

Nº du modèle – _____

Nº de série – _____

Options de la machine – _____

Agent commercial – _____

Nº tél. de l'agent commercial – _____

Numéro d'identification client – _____

Date d'installation – _____

JP

パーツの発注方法 ?上記の図を参照してください

TENNANT社製のパーツまたは同等品のみをお使いください。
パーツやサプライ品のご注文は、オンライン、電話、FAX、または手紙でお願いいたします。
確実にお届けできるように、以下の情報お知らせください。

1. (A) 製品のモデル名をお知らせください。
2. (B) 製品のデータラベルに印刷されているシリアル番号
   をお知らせください。
3. (C) パーツリストを参照して、シリアル番号が正しいかご確認
   ください。
4. パーツ番号と数量をお知らせください。マニュアル/カタログの
   ページ番号や参照番号でのご注文はご遠慮ください。
5. お客様のお名前、会社名、顧客ID番号、請求/発送先住所、
   電話番号、注文書番号をお知らせください。
6. 発送に関するご希望があれば、明記してください。

(D) ▽ – アセンブリを示します
▲ – アセンブリに含まれるパーツを示します

後日確認できるように、設置時に記入してください。

モデルNo. – _____

シリアルNo. – _____

製品のオプション– _____

販売代理店 – _____

販売代理店の電話番号 – _____

顧客ID番号 – _____

設置日 – _____

General Recommended Maintenance Items

	Ref.	Part No.	Serial Number	Description	Qty.
▽		9003130	(000000–002593)	Maint Kit, 400hr, Dsl [M20/T20]	1
▲		369746	(000000–002593)	Element, Fltr, Air [Dn]	1
▲		39703–2	(000000–002593)	Element, Fltr, Oil, Spin–On [Ku]	1
▲		1017126	(000000–002593)	Element, Fltr, Fuel [Dn]	1
▲		1023911	(000000–002593)	Belt, V, 37.5l [3v]	1
▲		31613	(000000–002593)	Strainer, Hyd, 25 Gpm 100 Mesh	1
▲		1021579	(000000–002593)	Filter Assy, Hyd, 10mic	1
▽		9006060	(002594–)	Maint Kit, 400hr, Dsl [M20/T20]	1
▲		369746	(002594–)	Element, Fltr, Air [Dn]	1
▲		39703–2	(002594–)	Element, Fltr, Oil, Spin–On [Ku]	1
▲		1017126	(002594–)	Element, Fltr, Fuel [Dn]	1
▲		31613	(002594–)	Strainer, Hyd, 25 Gpm 100 Mesh	1
▲		1021579	(002594–)	Filter Assy, Hyd, 10mic	1
▲		393244	(002594–)	Belt, V, 42.0L [Hc41]	1
		1048295AM	(000000–)	Filter, Panl, Syn, 4.2 X 20.0 X 30.0	1
		1027290	(000000–)	Filter, Soltn, 20mesh, Pm12 3.1d 02.6l	1
		87866	(000000–)	Key, Ignition [Set Of 2]	1
		10143	(000000–)	Battery, Wet, 12vdc 0600cca	1
		20833	(000000–)	Wheel, 3.0d 1.38w 0.50b	2
		1024586	(000000–)	Skirt, Neo, .06, 06.85w 27.95l, 08 Hole	2
		1019295	(000000–)	Skirt, Neo, .18, 10.37w 27.95l, 12 H&S	2
		1020166	(000000–)	Skirt, Neo, .06, 12.00w 45.88l, 07 Hole	1
		1022009	(000000–)	Skirt, Neo, .06, 06.38w 40.86l, 06 Hole	1
		1022007	(000000–)	Skirt, Rbr, .37, 04.50w 40.94l, 06 Hole	1
		1017868	(000000–)	Blade, Sqge, Front, 49.58l [Linard]	1
		1031331	(000000–)	Blade, Sqge, Rear, Linatex	1
		83874	(000000–)	Gasket, Sqge	2
		1031011	(000000–)	Blade, Sqge, .38 3.55w 038.3l, Linatex	2
		1027719	(000000–)	Blade, Sqge, Front, 49.58l Ure	1
		1031945	(000000–)	Blade, Sqge, Rear, 53.78l Ure	1
		1031823	(000000–)	Blade, Sqge, .38 3.55w 038.3l, Ure	2
		1027716	(000000–003076)	Squeegee Assy, Sba, Ure	1
		1059091	(003077–)	Blade, Sqge, Side Brush, Urethane	1
		1059092	(003077–)	Blade, Sqge, Side Brush, Urethane	1
		1025005	(000000–003076)	Squeegee Assy, Sba, Linatex	1
		1046980	(003077–)	Blade, Sqge, Side Brush, Linatex	1
		1047238	(003077–)	Blade, Sqge, Side Brush, Linatex	1
		84597	(000000–)	Tire Assy, Solid, 18.0x6.0 4.5bc/5bolt	1
		16411	(000000–)	Paint, Airdry, Off–White, 12oz	1
		16412	(000000–)	Paint, Airdry, Teal, 12oz, Solid	1
		377540	(000000–)	Paint, Airdry, Blk, 12oz	1
		377538	(000000–)	Paint, Airdry, Gray, 12oz [Enamel]	1
		377537	(000000–)	Paint, Airdry, Iron Gray,12oz[Pwdr Coat]	1
		1057710	(000000–)	Oil, Hyd [El, Iso 100, 01gal]	1
		1057711	(000000–)	Oil, Hyd [El, Iso 100, 05gal]	1
		1069019	(000000–)	Oil, Hyd [El, Iso 68, 01gal]	1
		1069020	(000000–)	Oil, Hyd [El, Iso 68, 05gal]	1
		1057707	(000000–)	Oil, Hyd [El, Iso 32, 01gal]	1
		1057708	(000000–)	Oil, Hyd [El, Iso 32, 05gal]	1

SECTION 2

Contents **Page**

Fig. 1 – Brushes, Replacement, Scrub Head 2-3
Fig. 2 – Brushes, Replacement, Side Brush (000000–xxxxxx) 2-4
Fig. 3 – Brushes, Replacement, Side Brush (yyyyyy–) 2-5
Fig. 4 – Main Frame Group 2-4
Fig. 5 – Operator Station Group 2-6
Fig. 6 – Operator Station Insulation Group . 2-8
Fig. 7 – Instrument Panel Group, Diesel . . 2-10
Fig. 8 – Seat Group 2-12
Fig. 9 – Steering Group 2-14
Fig. 10 – Front Cover Group 2-16
Fig. 11 – Engine Cover Group 2-18
Fig. 12 – Engine and Mount Group, Diesel . 2-20
Fig. 13 – Engine Fuel Tank Group, Diesel . . 2-24
Fig. 14 – Engine Fuel Line Group, Diesel . . 2-26
Fig. 15 – Engine Air Cleaner Group, Diesel 2-28
Fig. 16 – Engine Alternator Group, Diesel (000000–002547) 2-30
Fig. 17 – Engine Alternator Group, Diesel (002548–) 2-32
Fig. 18 – Engine Muffler Group, Diesel 2-34
Fig. 19 – Engine Radiator Group, Diesel (000000–003038) 2-36
Fig. 20 – Engine Radiator Group, Diesel (003039–006127) 2-38
Fig. 21 – Engine Radiator Group, Diesel (006128–) 2-40
Fig. 22 – Engine Radiator Hose Group, Diesel (003039–) 2-42
Fig. 23 – Battery and Electrical Group 2-44
Fig. 24 – Wheel Group, Front Drive 2-46
Fig. 25 – Wheel Group, Rear 2-48
Fig. 26 – Brake Pedal Linkage Group 2-50
Fig. 27 – Directional Pedal and Linkage Group, Diesel 2-52
Fig. 28 – Hopper Lift Arms Group 2-54
Fig. 29 – Hopper and Debris Screen Group 2-56
Fig. 30 – Hopper Cover and Dust Filter Group2-58
Fig. 31 – Hopper Bumper Group 2-60
Fig. 32 – Hopper Door Group (000000–003061) 2-62
Fig. 33 – Hopper Door Group (003062–) 2-64
Fig. 34 – Cylindrical Scrub Brush Drive Group, Left Side 2-66
Fig. 35 – Cylindrical Scrub Brush Drive Group, Right Side 2-68
Fig. 36 – Cylindrical Brush Head Lift Group 2-70
Fig. 37 – Cylindrical Brush Head Skirt Group 2-72
Fig. 38 – Squeegee Lift Group, Rear 2-74
Fig. 39 – Squeegee Group, Rear 2-76
Fig. 40 – Squeegee Linkage Group, Rear . . 2-78
Fig. 41 – Squeegee Group, Right Side 2-80
Fig. 42 – Squeegee Lift Group, Right Side . 2-82
Fig. 43 – Squeegee Group, Left Side 2-84
Fig. 44 – Squeegee Lift Group, Left Side . . 2-86
Fig. 45 – Solution Tank Group 2-88
Fig. 46 – Solution Tank Drain Group 2-92
Fig. 47 – Solution Control Group 2-94
Fig. 48 – Recovery Tank Group 2-96
Fig. 49 – Recovery Tank Drain Group 2-98
Fig. 50 – Vacuum Fan Group, Scrubbing (000000–006877) 2-100
Fig. 51 – Vacuum Fan Group, Scrubbing (006878–) 2-102
Fig. 52 – Vacuum Fan Group, Sweeping . . 2-104
Fig. 53 – Hydraulic Schematic (000000–002699) 2-106
Fig. 54 – Hydraulic Schematic (002700–003297) 2-108
Fig. 55 – Hydraulic Schematic (003298–) 2-110
Fig. 56 – Hydraulic Hose Group, Steering and Propel 2-112
Fig. 57 – Hydraulic Hose Group, Pump and Vacuum Fans (000000–006877) 2-114
Fig. 58 – Hydraulic Hose Group, Pump and Vacuum Fans (006878–) . 2-116
Fig. 59 – Hydraulic Hose Group, Brush and Hopper 2-118
Fig. 60 – Hydraulic Hose Group, Squeegee Lift 2-120
Fig. 61 – Hydraulic Pumps Group 2-122
Fig. 62 – Hydraulic Cooler and Tubes Group2-124
Fig. 63 – Hydraulic Reservoir Group 2-126
Fig. 64 – Hydraulic Valves Group (000000–002699) 2-128
Fig. 65 – Hydraulic Valve Group (002700–) 2-130
Fig. 66 – Electrical Schematic (000000–002532) 2-132
Fig. 67 – Electrical Schematic (002533–003478) 2-136
Fig. 68 – Electrical Schematic (003479–) 2-142
Fig. 69 – Electrical Wire Harnesses Group, Main 2-150
Fig. 70 – Electrical Wire Harness Group, Headlight 2-164
Fig. 71 – Electrical Wire Harness Group, Hopper 2-165
Fig. 72 – Electrical Wire Harness Group, Hopper Cover 2-168
Fig. 73 – Electrical Wire Harness Group, Diesel Engine 2-170
Fig. 74 – Label Group 2-173

Fig. 1 – Brushes, Replacement, Scrub Head

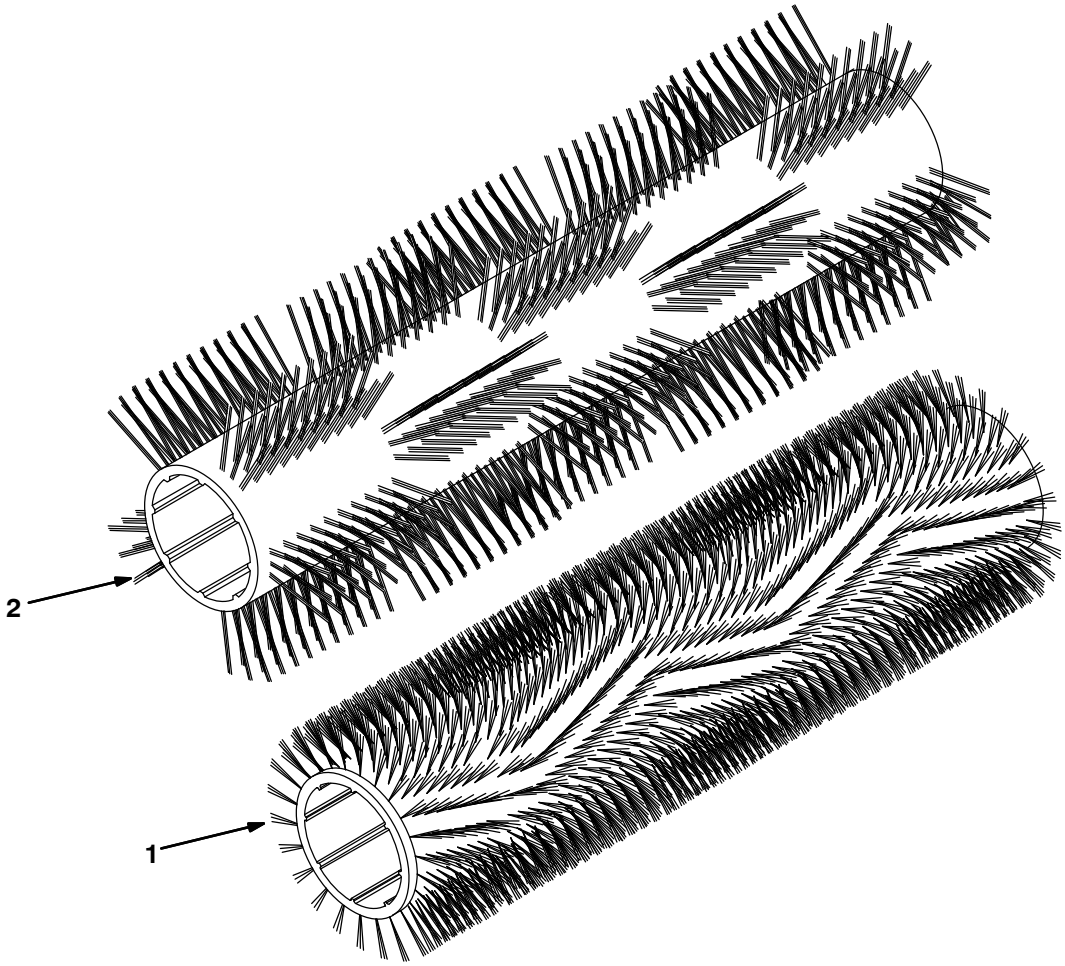

354408 – M20

Ref.	Part No.	Serial Number	Description	Qty.
1	1026223	(000000–)	Brush, Sweep / Scb, 40L, Polypropylene	2
1	1026222	(000000–)	Brush, Sweep / Scb, 40L, Super Abrasive	2
1	1027697	(000000–)	Brush, Sweep / Scb, 40L, Polyester	2
1	1030969	(000000–)	Brush, Sweep / Scb, 40L, Heavy Duty Polypropylene	2
2	1040524	(000000–)	Brush, Sweep / Scb, 40L, Wndw, Polypropylene	1
2	1059640	(000000–)	Brush, Sweep / Scb, 40L, Wndw, Super Abrasive	1

Fig. 2 – Brushes, Replacement, Side Brush

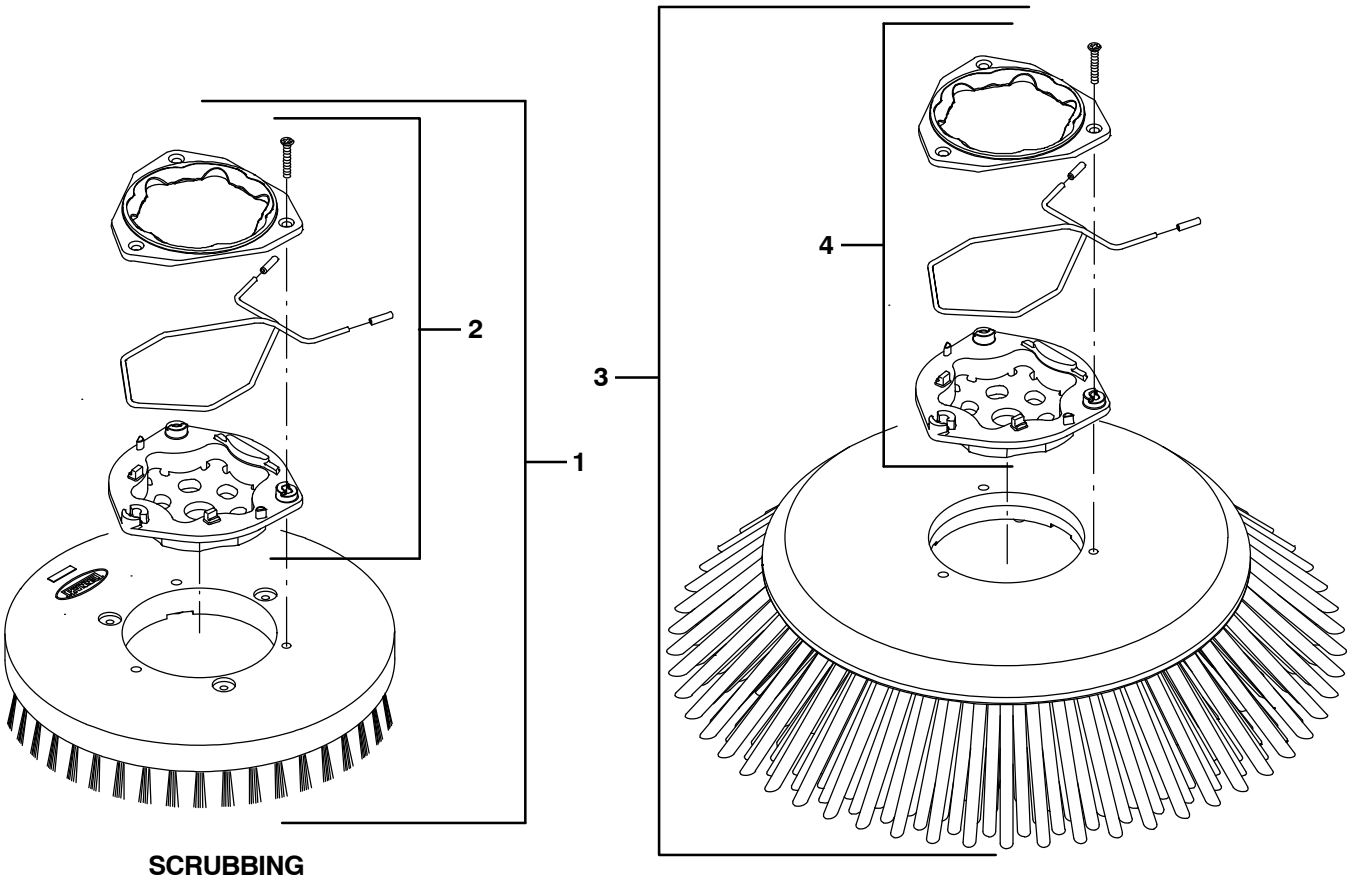

SCRUBBING SIDE BRUSH

SWEEPING SIDE BRUSH

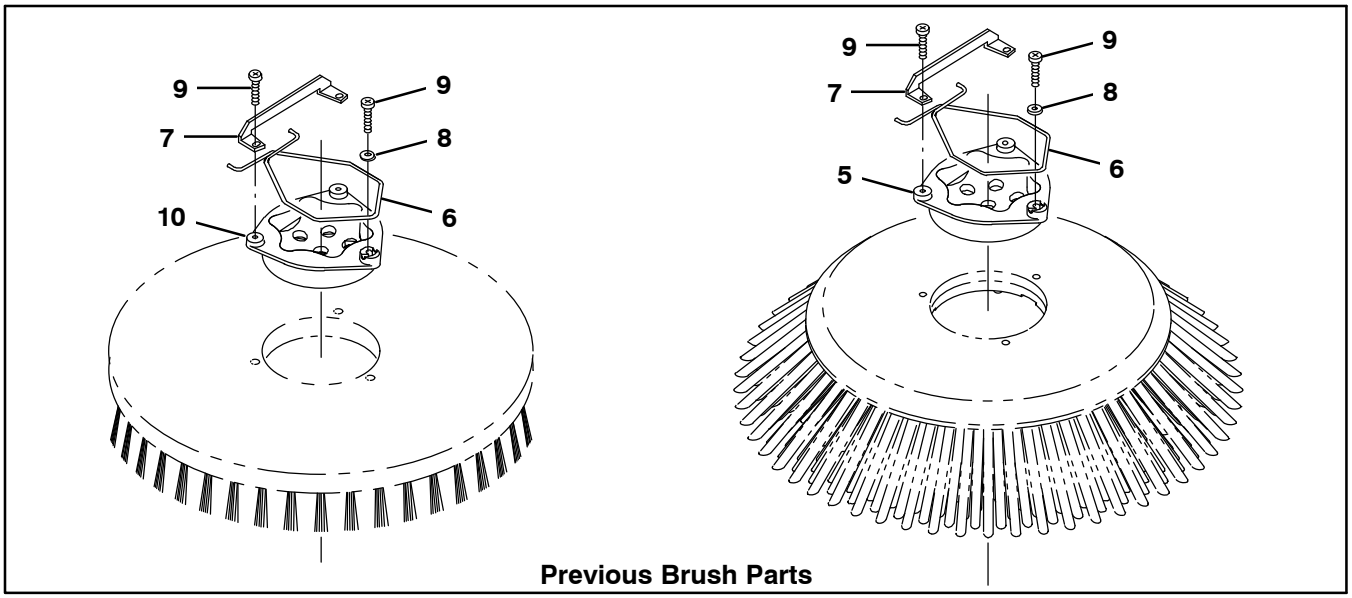

Previous Brush Parts

354584

Fig. 2 – Brushes, Replacement, Side Brush

	Ref.	Part No.	Serial Number	Description	Qty.
▽	1	1220235	(000000–)	Brush Assy, Disk, Scb, 16.0d, Nylon	1
▲	2	9014662	(000000–)	Brush Kit, Hub Assy, Drive, Ci [Hdpe In]	1
▽	1	1220236	(000000–)	Brush Assy, Disk, Scb, 16.0d, Heavy Duty Polypropylene	1
▲	2	9014662	(000000–)	Brush Kit, Hub Assy, Drive, Ci [Hdpe In]	1
▽	1	1221543	(000000–)	Brush Assy, Disk, Scb, 16.0d, Super Abrasive	1
▲	2	9014662	(000000–)	Brush Kit, Hub Assy, Drive, Ci [Hdpe In]	1
▽	3	1220185	(000000–)	Brush Assy, Disk, Swp, 24.0d, Polypropylene	1
▲	4	9014666	(000000–)	Brush Kit, Hub Assy, Drive, Ci [Uhmw]	1
				Previous Brush Parts	
	5	1017368	(000000–)	Hub, Drive, Brush, Disk, 3hole 5.8bc	1
	6	14838	(000000–)	Spring, Wir, 0.16d, Brush Retaining	1
	7	24299	(000000–)	Bracket, Retainer, Spring	1
	8	01684	(000000–)	Washer, Flat, 0.27b 0.69d .05, Ss	1
	9	32746	(000000–)	Screw, Pan, Phl, M6 X 1.00 X 35, Ss	3
	10	15539	(000000–)	Hub, Drive, Brush, Disk, 3hole 5.8bc[6t]	1
		1042500	(000000–)	Brush Assy, Disk, Scrub, 16.0 D, Heavy Duty Polypropylene (Replaced by 1220236)	1
		1042504	(000000–)	Brush Assy, Disk, Scrub, 16.0 D, Super Abrasive (Replaced by 1221543)	1
		1042499	(000000–)	Brush Assy, Disk, Scrub, 16.0D, Nylon (Replaced by 1220235)	1
		1027688	(000000–)	Brush Assy, Disk, Sweep, 24.oD, Polypropylene (Replaced by 1220185)	1

Fig. 3 – Main Frame Group

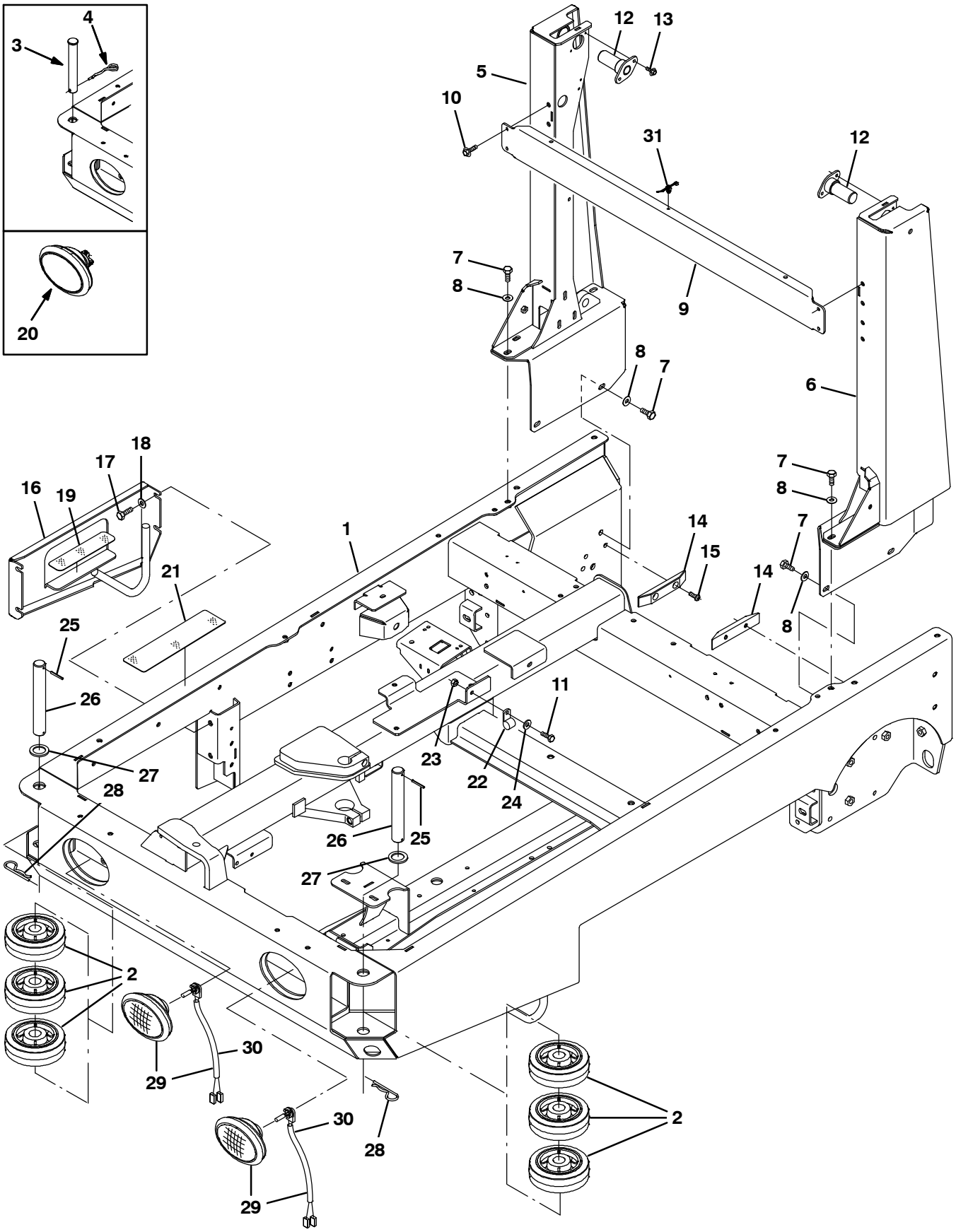

354406

Fig. 3 – Main Frame Group

	Ref.	Part No.	Serial Number	Description	Qty.
	1	9002401	(000000–)	Frame Wldt, Main, Replmt [m20 & T20]	1
	2	1060130	(000000–)	Wheel, 06.0D 2.00W 1.19B, Gray Rbr	6
	3	9006334	(000000–003062)	Pin Kit, Wheel, Ci [M20/T20/M30]	2
	4	761490	(000000–003062)	Pin, Cotter, Hair, Dbl	2
	5	9002400	(000000–)	Tower, Wldt, Lift, Rh, Replmt [M20]	1
	6	9002399	(000000–)	Tower, Wldt, Lift, Lh, Replmt [M20]	1
	7	39283	(000000–)	Screw, Hex, M10 X 1.5 X 25, 8.8	10
	8	32492	(000000–)	Washer, Flat, 0.38 Std	10
	9	1017791	(000000–)	Channel, Upper, Tower, Lift	1
	10	1037346	(000000–)	Screw, Hex, M8 X 1.25 X 25, 9.8, Sems	4
	11	39277	(001338–)	Screw, Hex, M8 X 1.25 X 25, 8.8	1
	12	1019251	(000000–)	Pin Wldt, Pivot, Hppr	2
	13	74455	(000000–)	Screw, Hex, M6 X 1.0 X 12, Fmg	4
	14	1021327	(000000–)	Block, Guide, Hppr	2
	15	367771	(000000–)	Screw, Pan, M8 X 1.25 X 25, Ss	4
	16	1027916	(000000–)	Panel Wldt, Filler	1
	17	12317	(000000–)	Screw, Hex, M10 X 1.5 X 30, Ss	4
	18	01686	(000000–)	Washer, Flat, 0.44b 1.00d .08, Ss	4
	19	363458	(000000–)	Tread, Non–Skid, 01.9w 08.0l	1
▽	20	1019225	(000000–003382)	Headlight, 12vdc, 27watt, 2.1a, Oval (Rpl by 1060942)	2
▲		1031826	(000000–003382)	Lamp, 12vdc [Speaker]	1
▲		1031827	(000000–003382)	Receptacle, Lamp [Speaker]	1
	21	58819	(000000–)	Tread, Non–Skid, 03.0w 11.6l	1
	22	53466	(001338–)	Clamp, Cable, Stl, 1.50d X 1.00w, 1hole	1
	23	08709	(001338–)	Nut, Hex, Lock, M8 X 1.25, Nl	1
	24	32491	(001338–)	Washer, Flat, 0.31, Std	1
	25	23146	(003063–)	Pin, Roll, .187d X 1.62l, .187/.192	2
	26	1053838	(003063–)	Pin, 30mmd X 215mml	2
	27	1062566	(003063–)	Washer, Flat, 1.26B 1.88D .13, Stl, Pl	2
	28	34411	(003063–)	Pin, Cotter, Hair, 1.00d .178 Wir	2
▽	29	1060942	(003383–)	Headlight, 12Vdc, Oval, Halogen	2
▲	30	9007513	(003383–)	Lamp, Halogen [Speaker]	1
	31	1210807	(000000–)	Wire, Tie [W/.25” Fir Tree Clip]	1

Fig. 4 – Operator Station Group

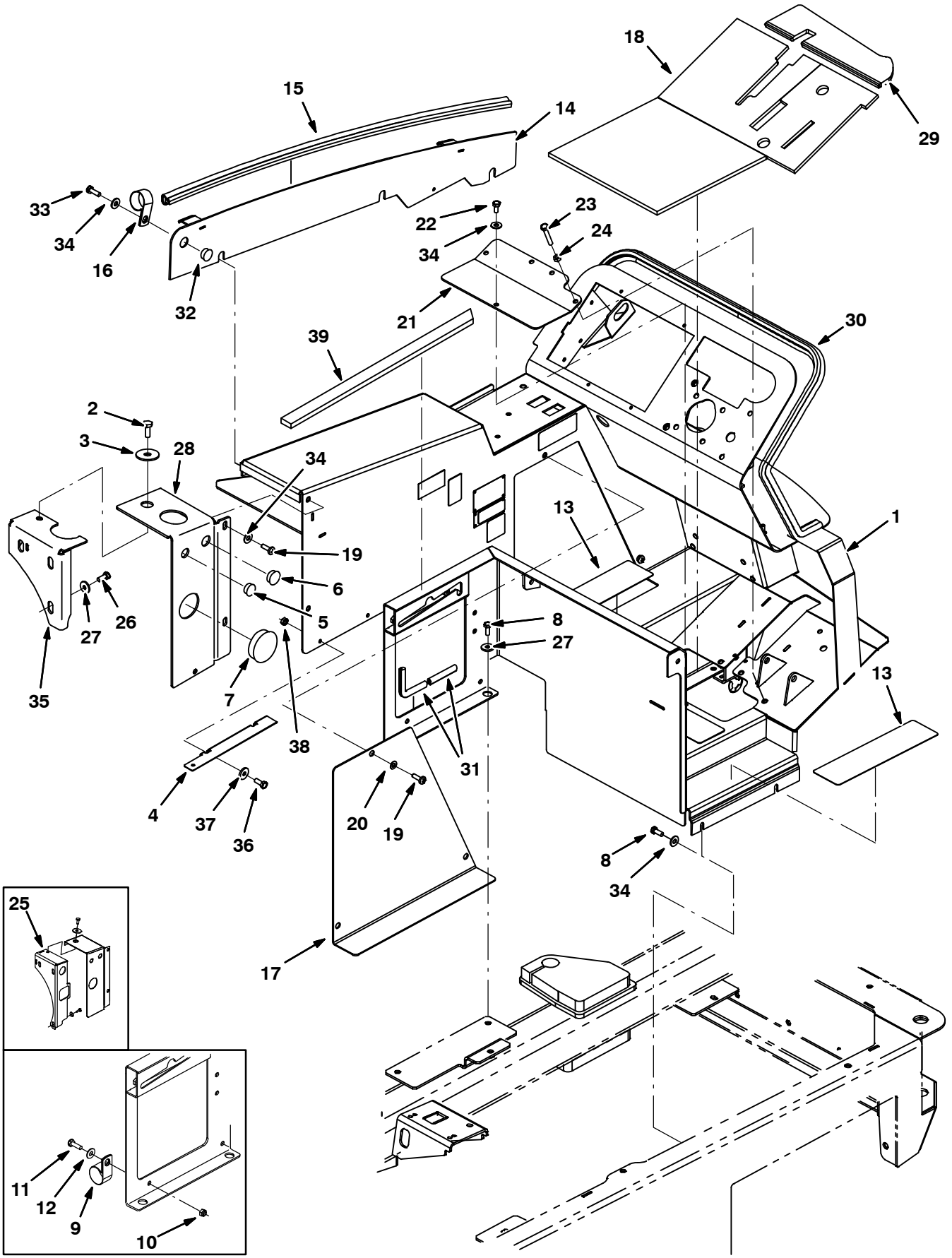

354582– D, NA

Fig. 4 – Operator Station Group

Ref.	Part No.	Serial Number	Description	Qty.
1	9002410	(000000–)	Panel Wldt, Dsl, Replmt	1
1	9002382	(000000–)	Panel Wldt, Dsl, Replmt [W/Fast]	1
1	9002383	(000000–)	Panel Wldt, Dsl, W/ Es, Replmt	1
1	9003424	(000000–)	Panel Wldt, Dsl, Replmt, TJ (Japan only)	1
1	9003427	(000000–)	Panel Wldt, Dsl, Replmt, TJ [W/Fast] (Japan only)	1
1	9003430	(000000–)	Panel Wldt, Dsl, Replmt, TJ, W/Es (Japan only)	1
2	39283	(000000–)	Screw, Hex, M10 X 1.5 X 25, 8.8	1
3	04414	(000000–)	Washer, Flat, 0.53b 1.88d .12, Stl, Pl	1
4	1047169	(000000–)	Bracket, Mtg, Insulation	2
5	82727	(000000–)	Plug, Hole, Rnd, 0.88h .03–.12, Blk Nyl	1
6	01493	(000000–)	Plug, Hole, Rnd, 1.00h .03–.12, Blk Nyl	1
7	1030017	(000000–)	Plug, Hole, Rnd, 2.50h .03–.25, Blk Nyl	1
8	16931	(000000–)	Screw, Hex, M8 X 1.25 X 20, 8.8	8
9	70157	(000000–001337)	Clamp, Cable, Ss, 2.50d X 1.00w, 1h	1
10	08709	(000000–001337)	Nut, Hex, Lock, M8 X 1.25, Nl	2
11	39277	(000000–001337)	Screw, Hex, M8 X 1.25 X 25, 8.8	7
12	32491	(000000–001337)	Washer, Flat, 0.31, Std	18
13	58819	(000000–)	Tread, Non–Skid, 03.0w 11.6l	4
14	1025435	(000000–)	Panel Wldt, Adj	1
15	1030593	(000000–)	Seal, Afmkt, Bulb, 90, 0.75d F/11ga 08ft	1
16	53466	(000000–)	Clamp, Cable, Stl, 1.50d X 1.00w, 1h	5
17	1021834	(000000–)	Panel, Access, Door	1
18	1027218	(000000–)	Mat, Floor	1
19	1031665	(000000–)	Screw, Pan, M8 X 1.25 X 25, Blk	4
20	39349	(000000–)	Washer, Flat, 0.31 Sae	3
21	1022699	(000000–)	Panel, Access, Floor	1
22	16931	(000000–)	Screw, Hex, M8 X 1.25 X 20, 8.8	4
23	363976	(000000–)	Screw, Hex, M8 X 1.25 X 60, 8.8, Fl	1
24	39311	(000000–)	Nut, Hex, Std, M8 X 1.25	1
25	1020540	(000000–002412)	Bracket Wldt, Mtg, Tank	1
26	09740	(000000–)	Screw, Hex, M8 X 1.25 X 20, Ss	3
27	1017218	(000000–)	Washer, Flat, 0.32b 1.00d .12, Ss	5
28	1033975	(000000–)	Bracket, Mtg	1
29	1027267	(000000–)	Mat, Floor	1
30	1020904	(000000–)	Seal, Panl, Instmt	1
31	1020168	(000000–)	Molding, Afmkt, Trim, Pvc, .08 .11, 1ft	1
32	80288	(002000–)	Plug, Hole, Rnd, 0.81h, Blk	1
33	39277	(000000–)	Screw, Hex, M8 X 1.25 X 25, 8.8	6
34	32491	(000000–)	Washer, Flat, 0.31, Std	17
35	1035997	(002413–)	Bracket Wldt, Mtg, Tank	1
36	06942	(000000–)	Screw, Hex, M6 X 1.00 X 16, 8.8	2
37	32490	(000000–)	Washer, Flat, 0.25, Std	2
38	08708	(000000–)	Nut, Hex, Lock, M6 X 1.00, Nl	2
39	1047295	(000000–)	Seal, Foam, 0.50	1

Fig. 5 – Operator Station Insulation Group

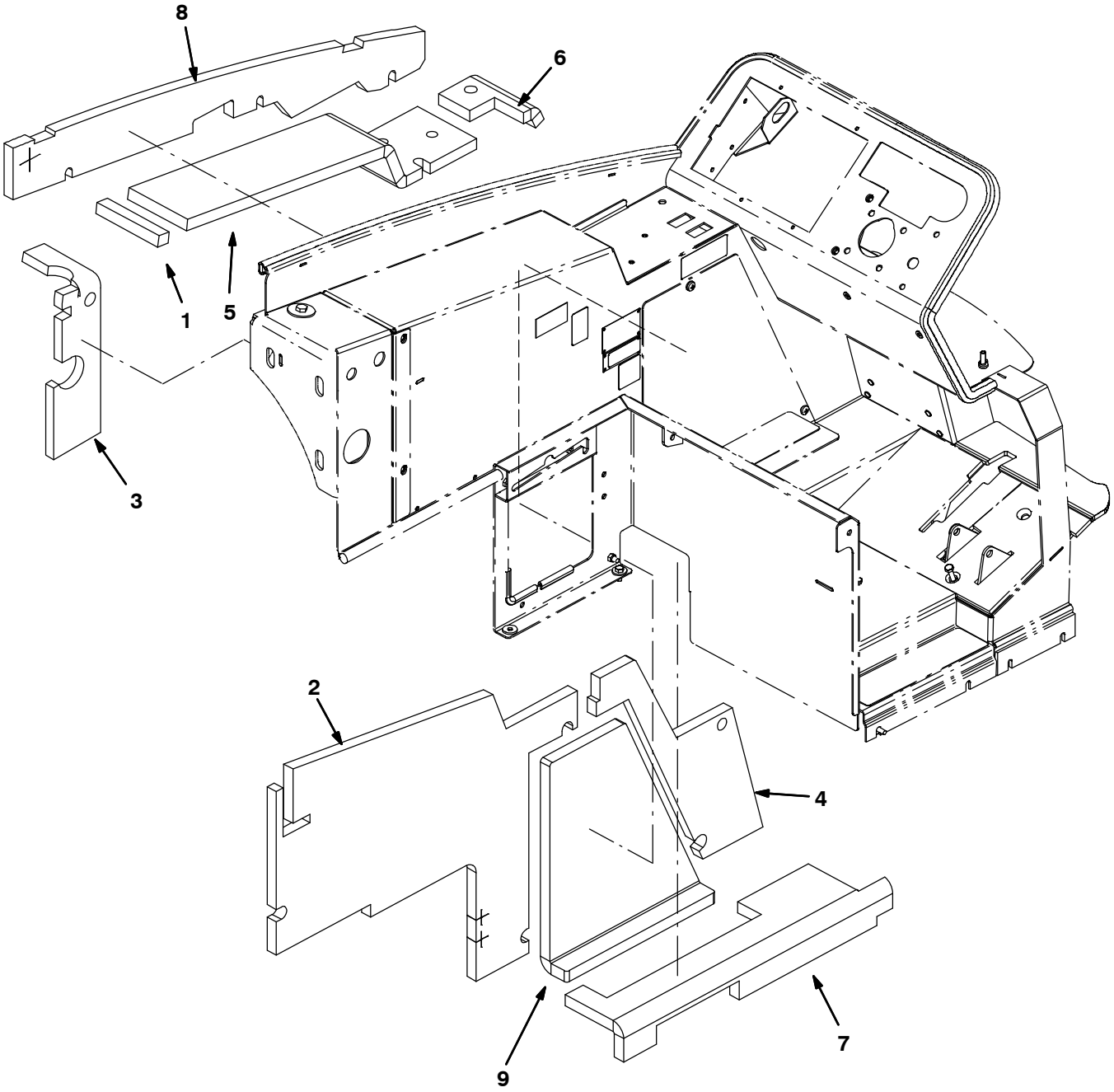

354409

Fig. 5 – Operator Station Insulation Group

Ref.	Part No.	Serial Number	Description	Qty.
1	1034769	(000000–)	Insulation, Flame–retardant, 0.75–0.88	1
2	1034765	(000000–)	Insulation, Flame–retardant, 0.75–0.88	1
3	1040841	(000000–)	Insulation, Flame–Retardant, 0.75–0.88	1
4	1023464	(000000–)	Insulation, Flame–Retardant, 0.75–0.88	1
5	1034764	(000000–)	Insulation, Flame–retardant, 0.75–0.88	1
6	1034766	(000000–)	Insulation, Flame–retardant, 0.75–0.88	1
7	1034768	(000000–)	Insulation, Flame–retardant, 0.75–0.88	1
8	1034770	(000000–)	Insulation, Flame–retardant, 0.75–0.88	1
9	1023569	(000000–)	Insulation, Flame–Retardant, 0.75–0.88	1

Fig. 6 – Instrument Panel Group, Diesel

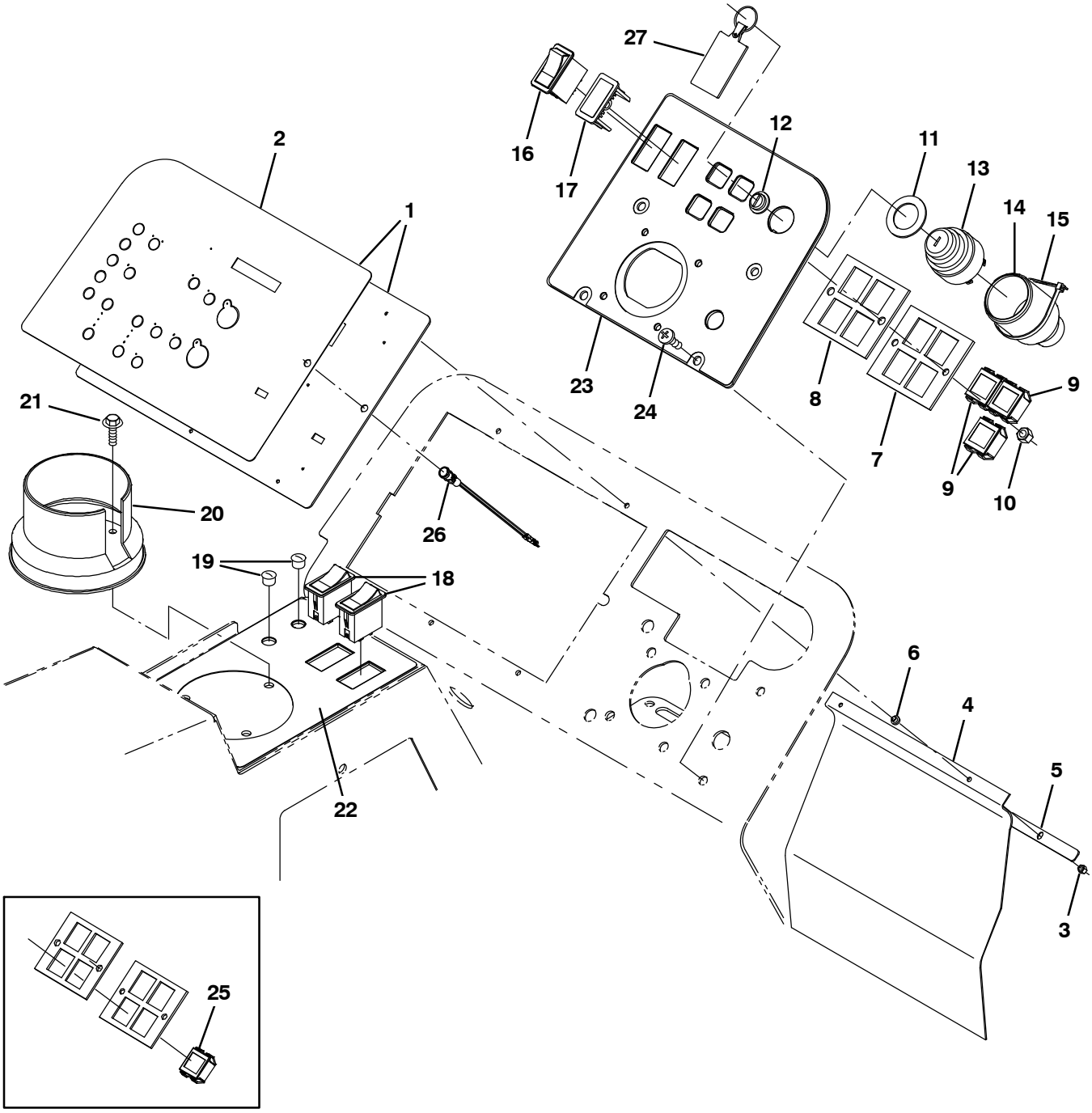

354410 – D, NA

Fig. 6 – Instrument Panel Group, Diesel

	Ref.	Part No.	Serial Number	Description	Qty.
▽	1	9003453	(000000–)	Panel Kit, Instmt, Repair [M20/M30]	1
▲	2	9002435	(000000–)	Label Kit, Panel, Replmt [M20]	1
▽	1	9007912	(000000–)	Panel, Kit, Instmt, Replmt [M20/M30 ec–H20 only]	1
▲	2	9007913	(000000–)	Label Kit, Panel, Replmt [M20/M30 ec–H20 only]	1
	3	16968	(000000–)	Nut, Hex, Lock, #08–32, Nl	4
	4	1028769	(000000–)	Flap, Battery	1
	5	1028772	(000000–)	Bar, Flat, Ss, .06 X .50 X 10.0l 2/.19sl	1
	6	1029362	(000000–)	Washer, Shld, Nyl [8–32]	4
	7	361071	(000000–)	Plate, Mtg, Light	1
	8	361073	(000000–)	Seal, Rbr, Clsd, 0.13, Instmt Panl	1
	9	361075	(000000–)	Light, Panl, 14vdc, , 1.1 X 1.0	3
	10	08712	(000000–)	Nut, Hex, Lock, M6 X 1.0, Ss, Nl	2
	11	73736	(000000–)	Washer, Flat, 1.15b 1.75d .08, Stl	1
	12	382516	(000000–)	Boot, .63id .29l .90w	1
▽	13	87536	(000000–)	Switch, Ignition [Ku]	1
▲		87866	(000000–)	Key, Ignition [Set Of 2]	1
	14	383165	(000000–)	Boot, Switch, Ignition	1
	15	49266	(000000–)	Tie, Cable, Nyl, 07.3l .19w 1.8 Max D	2
	16	392171	(000000–)	Switch, Rocker, Dpdt On/Off/On	1
	17	398501	(000000–)	Plug, Hole, Rt, Rocker Switch, .87 X 1.7	1
	18	398508	(000000–)	Switch, Rocker, Dpdt Mom/Off/Mom	2
	19	56992	(000000–)	Plug, Hole, Rnd, 0.50h .03–.12, Blk Nyl	1
	20	223599	(000000–)	Cup Holder, Rwk	1
	21	1036892	(000000–)	Screw, Hex, M6 X 1.00 X 25, 9.8 Sems	3
	22	1024287	(000000–)	Label, Switch, Rocker [M20/M30]	1
	23	9004881	(000000–)	Panel, Instmt, Rh, Dsl, Replmt	1
	24	1031665	(000000–)	Screw, Pan, M8 X 1.25 X 25, Blk	4
	25	361075	(000000–002886)	Light, Panl, 14vdc, , 1.1 X 1.0	1
	26	1041822	(000000–)	Light, Led, .312D, 2 Volt [Tri–Color] (ec–H20 only)	1
	27	1075003	(000000–)	Keychain, Rectangle, Parts & Service	1

Fig. 7 – Seat Group

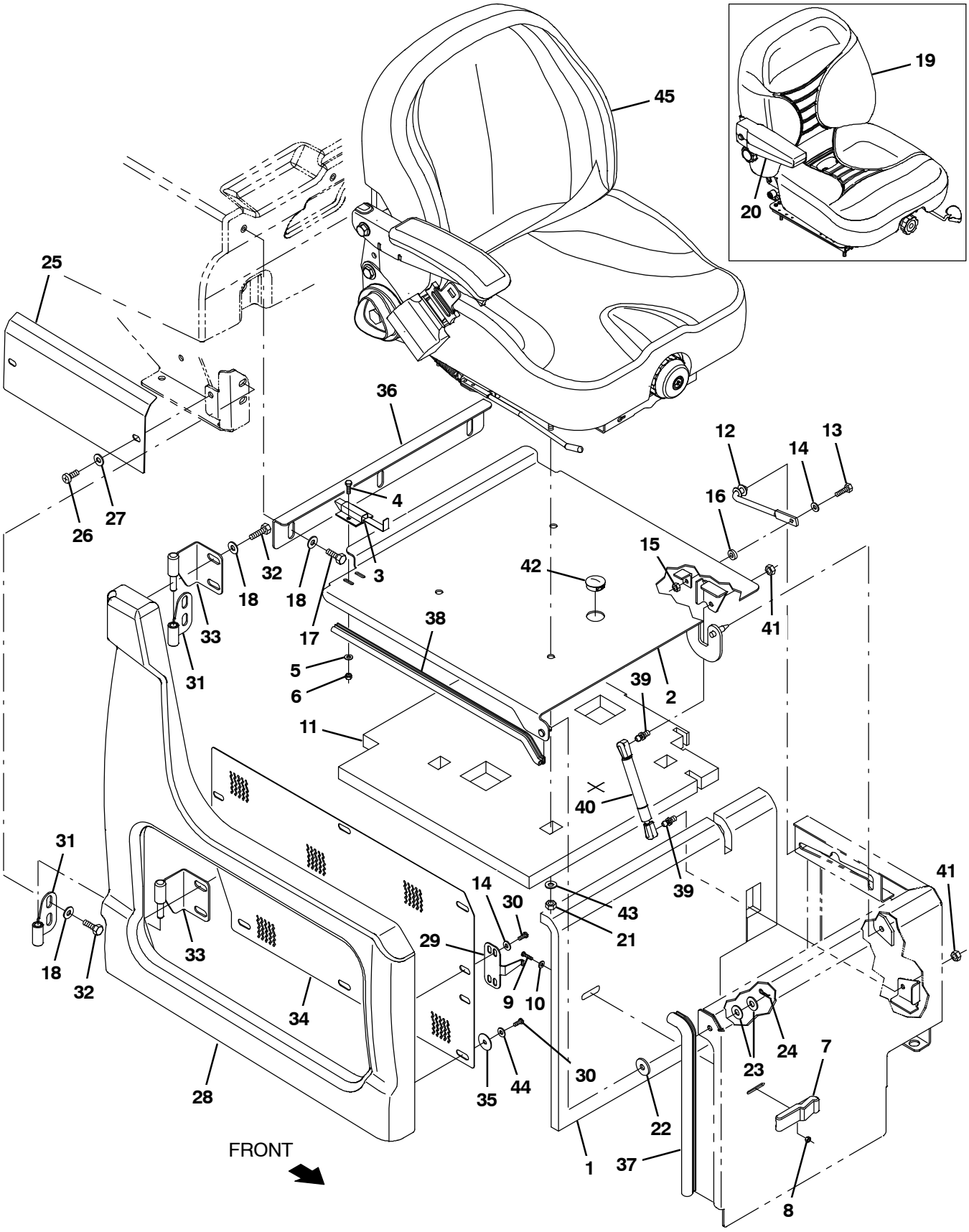

354411 – NA

Fig. 7 – Seat Group

	Ref.	Part No.	Serial Number	Description	Qty.
	1	1034767	(000000–)	Insulation, Flame–retardant, 0.75–0.88	1
	2	1019228	(000000–)	Plate Wldt, Seat	1
	3	1025736	(000000–)	Latch	1
	4	09252	(000000–)	Screw, Hex, M5 X 0.8 X 20, 8.8	2
	5	19066	(000000–)	Washer, Flat, #10	2
	6	06549	(000000–)	Nut, Hex, Lock, M5 X 0.8, Nl	2
	7	49800	(000000–)	Latch	1
	8	02850	(000000–)	Nut, Hex, Lock, M4 X 0.7, Nl	4
	9	06929	(000000–)	Screw, Pan, M4 X 0.7 X 25, 4.8	4
	10	19065	(000000–)	Washer, Flat, #08	2
	11	1023499	(000000–)	Insulation, Flame–Retardant, 1.0	1
	12	223080	(000000–)	Arm Wldt, Safety, Sppt, Seat, .38d 06.5d	1
	13	06943	(000000–)	Screw, Hex, M6 X 1.0 X 20, 8.8	1
	14	32483	(000000–)	Washer, Flat, 0.25 Sae	9
	15	08708	(000000–)	Nut, Hex, Lock, M6 X 1.0, Nl	1
	16	21851	(000000–)	Spacer, Plstc, Ny	1
	17	09740	(000000–)	Screw, Hex, M8 X 1.25 X 20, Ss	3
	18	1017218	(000000–)	Washer, Flat, 0.32b 1.00d .12, Ss	11
▽	19	1022105	(000000–006519)	Seat, Suspension, W/1 Arm And Belt	1
▲		1066893	(000000–006519)	Seatbelt, Retractable [Deluxe Seat]	1
▲		1048955	(000000–006519)	Switch, Seat, No [Delta 6440–04]	1
▲	20	1072815	(000000–006519)	Armrest, Rh	1
	21	32983	(000000–)	Nut, Hex, Lock, .31–18, Nl	4
	22	364749	(000000–)	Washer, Flat, 0.41b 1.25d .12, Pye	1
	23	32492	(000000–)	Washer, Flat, 0.38 Std	2
	24	08085	(000000–)	Pin, Cotter, Hair, 0.31d .058 Wir	1
	25	1022005	(000000–)	Cover, Lower	1
	26	1031665	(000000–)	Screw, Pan, M8 X 1.25 X 25, Blk	2
	27	39349	(000000–)	Washer, Flat, 0.31 Sae	2
	28	1018776	(000000–)	Shroud, Seat	1
	29	1026825	(000000–)	Bracket, Latch, Shrd, Seat	1
	30	09200	(000000–)	Screw, Pan, M5 X 0.8 X 12, Ss	8
	31	1024464	(000000–)	Hinge Wldt, Shrd, Rh	2
	32	16931	(000000–)	Screw, Hex, M8 X 1.25 X 20, 8.8	8
	33	1024425	(000000–)	Hinge Wldt, Shrd, Rh	2
	34	1025916	(000000–)	Grill, Side	1
	35	41178	(000000–)	Washer, Flat, 0.25 Fendr	6
	36	1020487	(000000–)	Bracket, Seat, Adj	1
	37	1030588	(000000–)	Seal, Afmkt, Bulb, 90, 0.75d F/11ga 02ft	1
	38	1031206	(000000–)	Seal, Afmkt, Bulb, 90, 0.50d, 02ft	1
	39	58494	(001299–)	Stud, Ball, .39d .31–16, Gasspring	2
	40	368391	(001299–)	Gasspring, 180lb, 03.0strk	1
	41	01760	(001299–)	Nut, Hex, Lock, .31–18, Nl, Thin	2
	42	76888	(002886–)	Plug, Hole, Rnd, 1.25H .03–.12, Blk Nyl	1
	43	32491	(000000–)	Washer, Flat, 0.31, Std	4
	44	19066	(000000–)	Washer, Flat, 0.25b 0.56d .05, Pl, 10	6
	45	1072456	(006520–)	Seat (See Breakdowns)	1

Fig. 8 – Steering Group

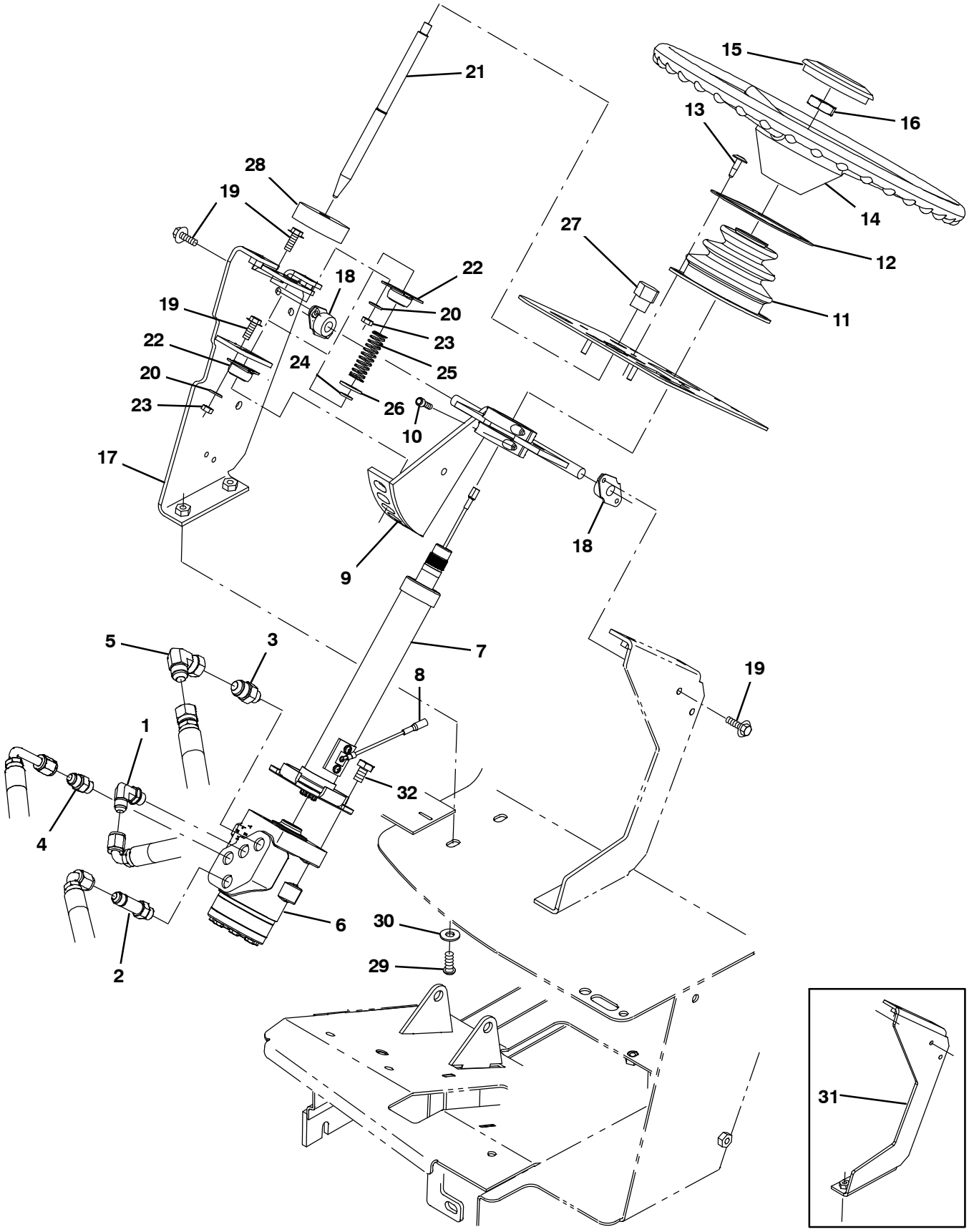

354412 – M20

Fig. 8 – Steering Group

	Ref.	Part No.	Serial Number	Description	Qty.
	1	56820	(000000–)	Fitting, Hyd, E90, Jm06/Om06	1
	2	59577	(000000–)	Fitting, Hyd, Str, Jm06/Om06, L	1
	3	56835	(000000–)	Fitting, Hyd, Str, Jm08/Om06	1
	4	56690	(000000–)	Fitting, Hyd, Str, Jm06/Om06	1
	5	17980	(000000–)	Fitting, Hyd, E90, Jf08/Jm08	1
	6	1024260	(000000–)	Steer–Control, Hyd#05, 06.1 2030 (See Breakdowns)	1
▽	7	1021265	(000000–)	Column, Steering, 09.9L 0.86D 36Tooth	1
▲	8	388153	(000000–)	Contact Kit, W/ Brush [En]	4
▽	9	73027	(000000–)	Bracket Wldt, Steering, Tilt	1
▲	10	01681	(000000–)	Screw, Soc, .25–20 X 0.75, Al	4
	11	70622	(000000–)	Boot, Bellows, 3.1l 4.4w 2.8h 1hole, Neo	1
	12	70623	(000000–)	Retainer, Boot, Steering Column	1
	13	72970	(000000–)	Rivet, Plstc, .250d X 0.898	4
	14	1058996	(000000–)	Wheel, Steering, 14.3d 0.81b 36tooth	1
	15	1024478	(000000–)	Button, Cntrl, Horn	1
	16	56185	(000000–)	Nut, Hex, Jam, M20 X 1.5	1
	17	1024695	(000000–)	Bracket Wldt, Tilt, Rh	1
	18	70709	(000000–)	Bearing, Flng, 2–Hole, 0.50b	2
	19	1040467	(000000–)	Screw, Hex, M6 X 1.00 X 20, 9.8, Sems	8
	20	32483	(000000–)	Washer, Flat, 0.25 Sae	4
	21	1023926	(000000–)	Pin, Locking, Steering, Tilt	1
	22	47585	(000000–)	Bearing, Flng, 2hole, 0.50b [Nyl]	2
	23	08708	(000000–)	Nut, Hex, Lock, M6 X 1.0, Nl	4
	24	70717	(000000–)	Ring, Retaining, Ext, 0.50d, Hd	1
	25	22290	(000000–)	Spring, Cmpr, 18.8d, 1.6w, 57.1l	1
	26	32486	(000000–)	Washer, Flat, 0.50 Sae	1
	27	04706	(000000–)	Knob, Tee, 2.5x1.0 1.1l 0.38–16 Plstc	1
	28	75968	(000000–)	Insulation, Acstc, Rnd, 0.8, 02.5d 0.5h	1
	29	1031665	(000000–)	Screw, Pan, M8 X 1.25 X 25, Blk	2
	30	32491	(000000–)	Washer, Flat, 0.31, Std	2
	31	1024157	(000000–001052)	Bracket, Tilt, Lh	1
	32	06960	(000000–)	Screw, Hex, M10 X 1.5 X 16, 8.8	4

Fig. 9 – Front Cover Group

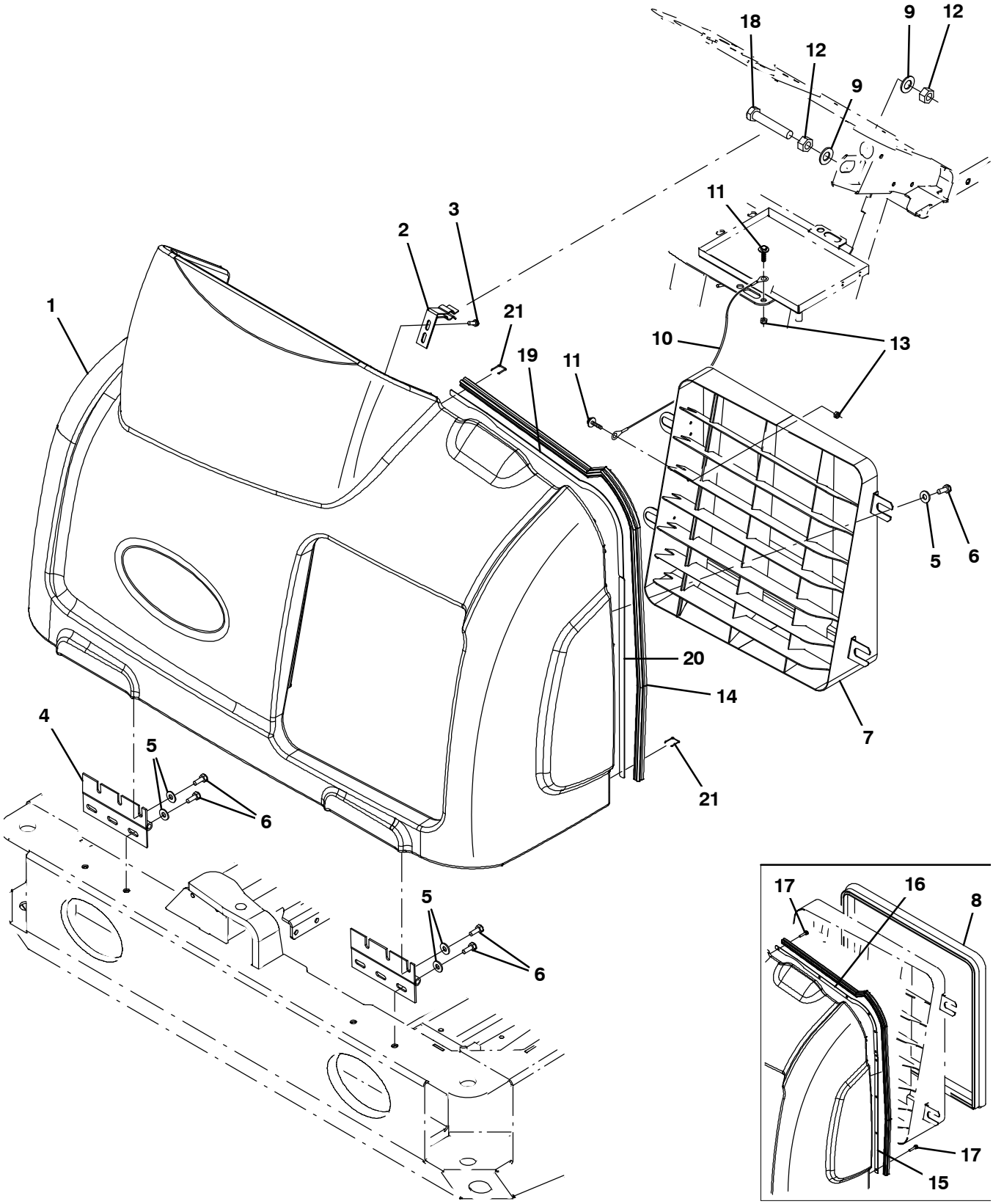

354413

Fig. 9 – Front Cover Group

Ref.	Part No.	Serial Number	Description	Qty.
1	1022069	(000000–)	Shroud, Front, Trimmed	1
2	1008916	(000000–)	Bracket Wldt, Latch	1
3	06942	(000000–)	Screw, Hex, M6 X 1.0 X 16, 8.8	2
4	71941	(000000–)	Hinge, .38pin .11 3.5w 06.0l 6/0.38sl	2
5	32491	(000000–)	Washer, Flat, 0.31, Std	14
6	16931	(000000–)	Screw, Hex, M8 X 1.25 X 20, 8.8	14
7	1035068	(000000–)	Grill Wldt, Front	1
8	1031557	(000000–001277)	Seal, Afmkt, Bulb, Str, 1.0d F/11ga 08ft	1
9	15331	(000000–)	Washer, Flat, 0.62 Sae	2
10	391368	(000000–)	Cable, Glv .09d 016.5l .38eye /.38eye	1
11	1040467	(000000–)	Screw, Hex, M6 X 1.00 X 20, 9.8, Sems	2
12	07782	(000000–)	Nut, Hex, Std, M16 X 2.0	2
13	08708	(000000–)	Nut, Hex, Lock, M6 X 1.0, Nl	2
14	1049919	(000000–)	Seal, Sponge, 0.88 1.00W 43.0L	1
15	1029652	(000000–002064)	Plate, Mtg, Seal	1
16	1029545	(000000–002064)	Plate, Mtg, Seal	1
17	20394	(000000–002064)	Screw, Hex, #10–16 X 0.62, Fmg, [Ab]	10
18	06988	(000000–)	Screw, Hex, M16 X 2.0 X 90, 8.8	1
19	1037970	(002065–)	Strip Mtg, Seal	1
20	1037971	(002065–)	Strip Mtg, Seal	1

Fig. 10 – Engine Cover Group

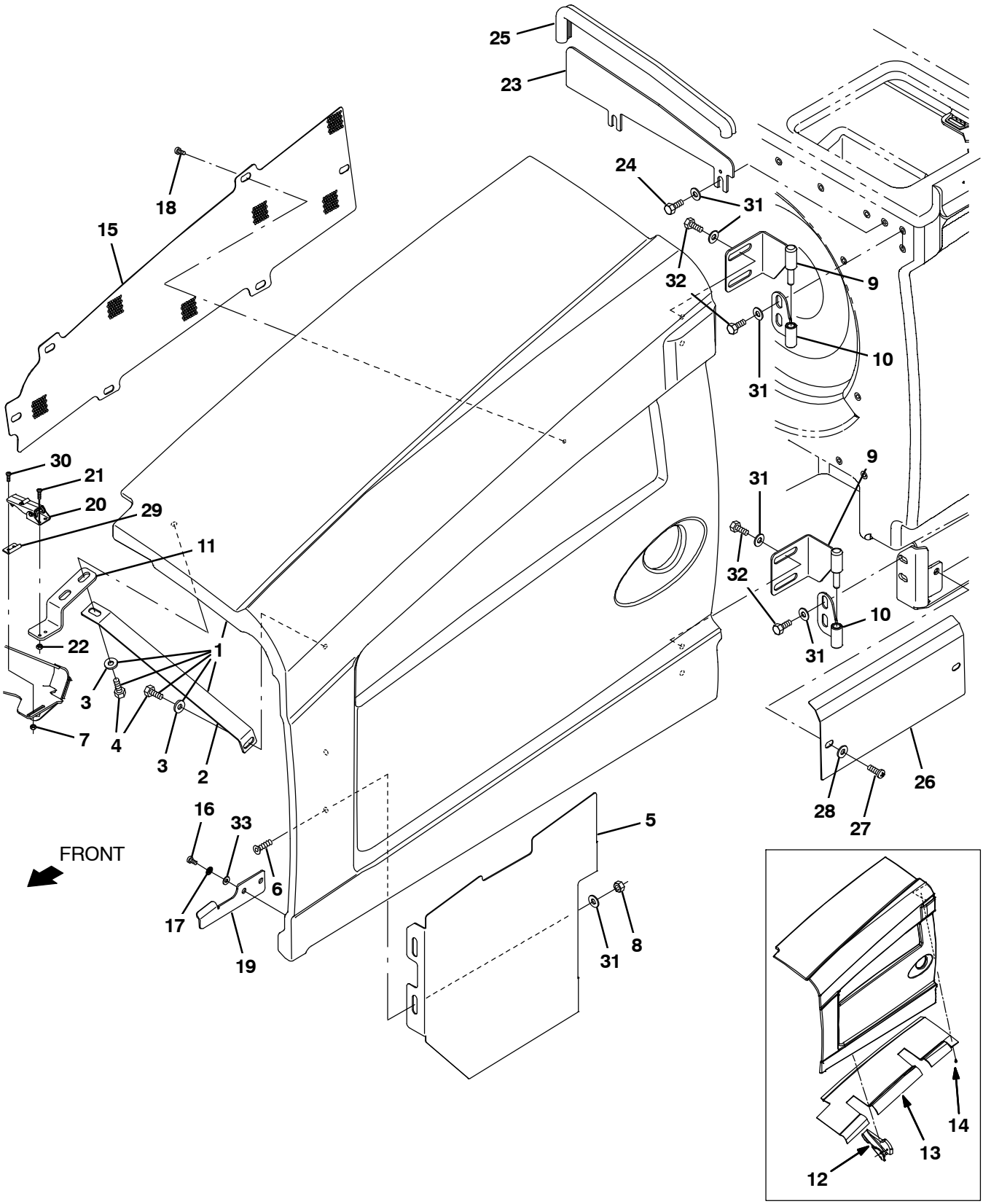

356528 – D

Fig. 10 – Engine Cover Group

	Ref.	Part No.	Serial Number	Description	Qty.
▽	1	1033156	(000000–)	Shroud Assy, Eng	1
▲	2	1026628	(000000–)	Angle, Brace, Shrd	1
▲	3	1017218	(000000–)	Washer, Flat, 0.32b 1.00d .12, Ss	2
▲	4	16931	(000000–)	Screw, Hex, M8 X 1.25 X 20, 8.8	2
	5	1022004	(000000–)	Bracket, Shield, Heat	1
	6	74077	(000000–)	Screw, Flt, M8 X 1.25 X 25	4
	7	33932	(000000–)	Nut, Hex, Lock, M4 X 0.7, Nl, Ss	2
	8	08709	(000000–)	Nut, Hex, Lock, M8 X 1.25, Nl	4
	9	1024500	(000000–)	Hinge Wldt, Shrd, Lh	2
	10	1025196	(000000–)	Hinge Wldt, Shrd, Lh	2
	11	1020186	(000000–)	Bracket, Latch, Cover	1
	12	1028516	(000000–001327)	Insulation, Shrd, Eng, Gusset	1
	13	1026665	(000000–001327)	Insulation, Flame–Retardant, 0.5	1
	14	21168	(000000–001327)	Clip, .250h, Plstc [Pine–Tree]	14
	15	1026726	(000000–)	Grill, Eng	1
	16	09200	(000000–)	Screw, Pan, M5 X 0.8 X 12, Ss	2
	17	19066	(000000–)	Washer, Flat, #10	2
	18	222267	(000000–)	Screw, Pan, Phl, 06–20 X 0.50, Fmg/Ab	6
	19	1028412	(000000–)	Bracket, Guide, Shrd	1
	20	384418	(000000–)	Latch, Door [Southco 91–562–07]	1
	21	06927	(000000–)	Screw, Pan, M4 X 0.7 X 16, 4.8	2
	22	02850	(000000–)	Nut, Hex, Lock, M4 X 0.7, Nl	2
	23	1025806	(000000–)	Plate, Seal, Sound	1
	24	09740	(000000–)	Screw, Hex, M8 X 1.25 X 20, Ss	2
	25	1030588	(000000–)	Seal, Afmkt, Bulb, 90, 0.75d F/11ga 02ft	2
	26	1022005	(000000–)	Cover, Lower	1
	27	1031665	(000000–)	Screw, Pan, M8 X 1.25 X 25, Blk	2
	28	39349	(000000–)	Washer, Flat, 0.31 Sae	2
	29	384419	(000000–)	Bracket, Latch, Keeper [Southco]	1
	30	24265	(000000–)	Screw, Pan, M4 X 0.7 X 16, Ss	2
	31	1017218	(000000–)	Washer, Flat, 0.32b 1.00d .12, Ss	15
	32	16931	(000000–)	Screw, Hex, M8 X 1.25 X 20, 8.8	7
	33	41139	(000000–)	Washer, Lock, Int–Ext, 10	2

Fig. 11 – Engine and Mount Group, Diesel

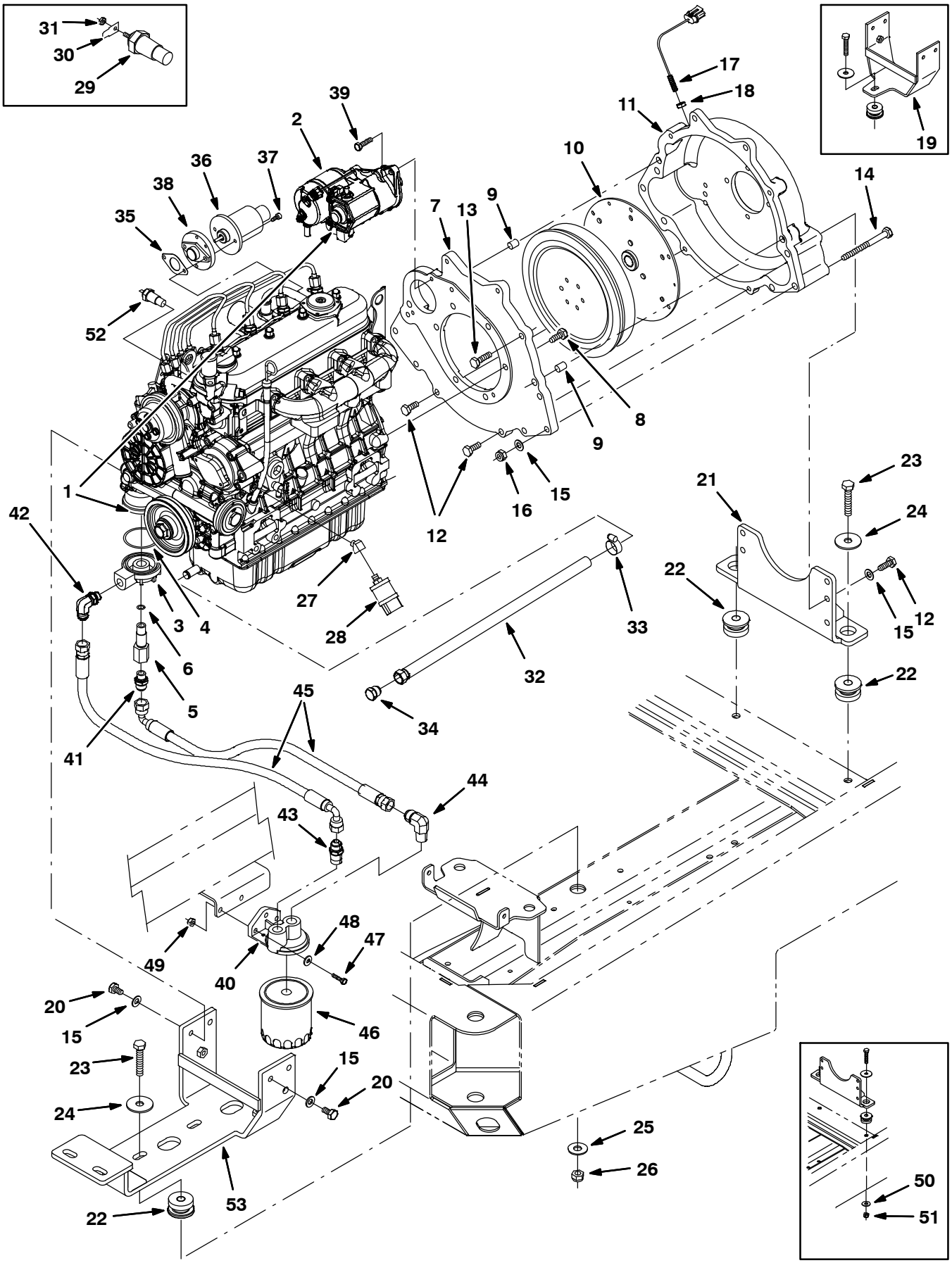

354494

Fig. 11 – Engine and Mount Group, Diesel

	Ref.	Part No.	Serial Number	Description	Qty.
▽	1	1072224	(006390–)	Engine Assy, Dsl, 25hp [Ku V1505 Tier4f] (See Engine Breakdown)	1
▲	2	74405	(006390–)	Motor, Starter, 12vdc [Kubota] (See Engine Breakdown)	1
▽	1	1040096	(002594–006389)	Engine Assy, Dsl, 37Hp [Ku V1505] (See Engine Breakdown)	1
▲	2	74405	(002594–006389)	Motor, Starter, 12vdc [Kubota] (See Engine Breakdown)	1
▽	1	1027591	(000000–002593)	Engine Assy, Dsl, 37hp [Ku] (See Engine Breakdown)	1
▲	2	74405	(000000–002593)	Motor, Starter, 12vdc [Kubota] (See Engine Breakdown)	1
	3	368056	(000000–)	Base, Fltr, Oil [Ku]	1
	4	70907	(000000–)	Seal, Org	1
	5	368059	(000000–)	Pipe, Fltr, Oil [Ku]	1
	6	70911	(000000–)	Seal, Org	1
	7	55837	(000000–)	Housing, Flywheel, Mach [1505, Kubo]	1
	8	07299	(000000–)	Screw, Hex, M10 X 1.25 X 25, 8.8	6
	9	54911–16	(000000–)	Pin, Dowel, Cyl Block [1pk=4]	2
	10	19252	(000000–)	Coupling, Drive, Flex, 09.5d / 13tooth	1
	11	58566	(000000–)	Housing, Flywheel, Mach [1505, Kubo]	1
	12	39283	(000000–)	Screw, Hex, M10 X 1.5 X 25, 8.8	6
	13	39284	(000000–)	Screw, Hex, M10 X 1.5 X 35, 8.8	2
	14	06966	(000000–)	Screw, Hex, M10 X 1.5 X 110, 8.8	5
	15	32485	(000000–)	Washer, Flat, 0.38, Sae	13
	16	41430	(000000–)	Nut, Hex, Lock, M10 X 1.5, Nl	5
	17	380521	(000000–)	Magnet, Pickup	1
	18	20171	(000000–)	Nut, Hex, Jam, .38–24	1
	19	1023282	(000000–003038)	Bracket Wldt, Mtg, Eng, Front, Dsl	1
	20	07299	(000000–)	Screw, Hex, M10 X 1.25 X 25, 8.8	4
	21	1023074	(000000–)	Bracket Wldt, Mtg, Eng, Rear, Dsl	1
	22	51176	(000000–)	Isolator, Vib, .50d	3
	23	06972	(000000–)	Screw, Hex, M12 X 1.75 X 60, 8.8	3
	24	04414	(000000–)	Washer, Flat, 0.53b 1.88d .12, Stl, Pl	3
	25	32493	(000000–)	Washer, Flat, 0.50, Std	1
	26	08711	(000000–)	Nut, Hex, Lock, M12 X 1.75,Nl	1
	27	24976	(000000–)	Fitting, Brs, E45, Pf02/Pm02	1
	28	79399	(000000–)	Switch, Press, Dpdt 0006psi	1
	29	1050757	(000000–002849)	Switch, Thermostat, Water	1
	30	68106	(000000–002849)	Terminal, Tab, .25 .19h .84l	1
	31	19310	(000000–002849)	Nut, Hex, Std, #08–32	1
	32	1027273	(000000–)	Hose, 0300, 08, Jf08str / None, 19.0	1
	33	63810	(000000–)	Clamp, Hose, Wormdrive, 0.56–1.06d, .56w	1
	34	16376	(000000–)	Fitting, Hyd, Plug, Jm08	1
	35	70165	(000000–)	Gasket, Solenoid, Throttle [Ku]	1
	36	71385	(000000–)	Actuator, Govnr, Dsl	1
	37	71388	(000000–)	Screw, Soc, M6 X 1.00 X 16, 12.9	4
	38	393401	(000000–)	Adapter, Actuator, Govnr, Eng, Dsl	1
	39	76570	(000000–)	Screw, Hex, M8 X 1.25 X 30, 8.8	2
	40	364972	(000000–)	Bracket, Mtg, Fltr, Oil, Remote	1
	41	367591	(000000–)	Fitting, Hyd, Str, Spcl	1
	42	33595	(000000–)	Fitting, Hyd, E90, Jm08/Om16 Metric	1
	43	15687	(000000–)	Fitting, Hyd, Str, Jm08/Pm08	1
	44	51869	(000000–)	Fitting, Hyd, E90, Jm08/Pm08	1
	45	59578	(000000–)	Hose, Hyd, Med08, Jf08e90/Jf08str, 032.0	2

Fig. 11 – Engine and Mount Group, Diesel

Ref.	Part No.	Serial Number	Description	Qty.
46	39703–2	(000000–)	Element, Fltr, Oil, Spin–On	1
47	39277	(000000–)	Screw, Hex, M8 X 1.25 X 25, 8.8	2
48	32491	(000000–)	Washer, Flat, 0.31, Std	2
49	08709	(000000–)	Nut, Hex, Lock, M8 X 1.25, Nl	2
50	32493	(000000–001337)	Washer, Flat, 0.50, Std	2
51	08711	(000000–001337)	Nut, Hex, Lock, M12 X 1.75,Nl	3
52	1050757	(002849–)	Switch, Thermostat, Water	1
53	1046810	(003039–)	Bracket Wldt, Mtg, Eng, Front, Dsl	1

Fig. 12 – Engine Fuel Tank Group, Diesel

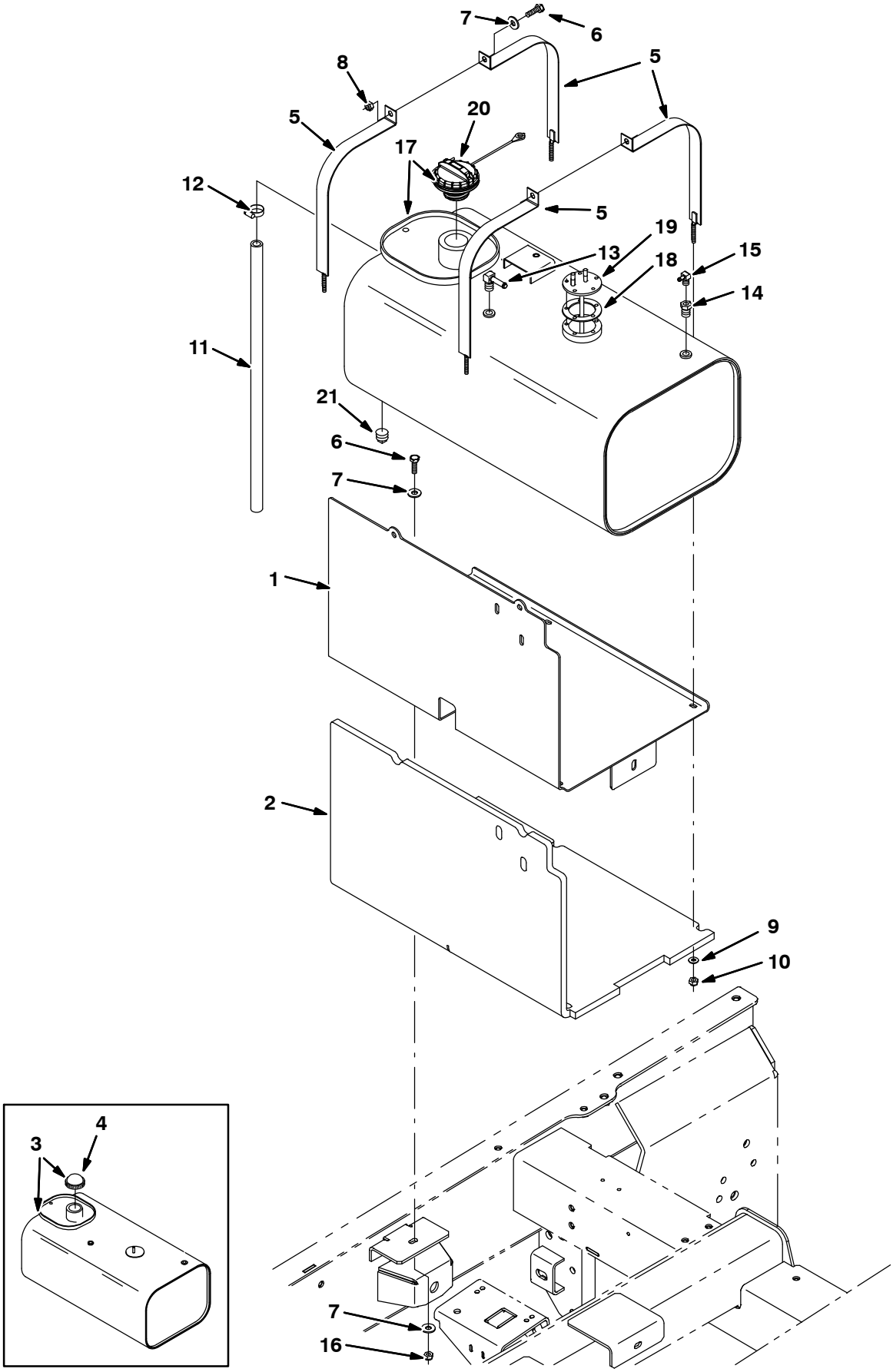

354487 – NA, JP

Fig. 12 – Engine Fuel Tank Group, Diesel

	Ref.	Part No.	Serial Number	Description	Qty.
	1	1026550	(000000–)	Tray Wldt, Fuel	1
	2	1026759	(000000–)	Insulation, Flame–Retardant, 0.5	1
▽	3	9003611	(000000–001999)	Tank, Fuel, 11.2gal [M20/T20]	1
▲	4	48267	(000000–001999)	Cap, Tank, Fuel, 2.3neck 2.6d	1
▲		1039521	(000000–001999)	Send–Unit, Fuel	1
	5	1025229	(000000–)	Strap, Tank, Gas	4
	6	39277	(000000–)	Screw, Hex, M8 X 1.25 X 25, 8.8	4
	7	32491	(000000–)	Washer, Flat, 0.31, Std	8
	8	08709	(000000–)	Nut, Hex, Lock, M8 X 1.25, Nl	2
	9	32483	(000000–)	Washer, Flat, 0.25, Sae	4
	10	32981	(000000–)	Nut, Hex, Lock, .25–20, Nl	4
	11	1023482	(000000–)	Hose, Fuel, 0.50id 21.0l	1
	12	54333	(000000–)	Clamp, Hose, Wormdrive, 0.31–0.88d, .31w	1
	13	9000355	(000000–)	Fitting, Brs, E90, Em05/Pm04	1
	14	17414	(000000–)	Fitting, Hyd, Str, Pf02/Pm04	1
	15	32183	(000000–)	Fitting, Brs, E90, Pm02/Bm03	1
	16	08709	(000000–)	Nut, Hex, Lock, M8 X 1.25, Nl	4
▽	17	9003611	(002000–002593)	Tank, Fuel, 11.2gal, Dsl, Replmt [2007]	1
▲	18	1033897	(002000–002593)	Gasket, Sender, Fuel	1
▲	19	1033901	(002000–002593)	Send–Unit, Fuel [2007]	1
▲	20	1032812	(002000–002593)	Cap, Fuel, Tank	1
▲	21	48126	(002000–002593)	Fitting, Pipe, Plug, Pm02, Sq Head	1
▽	17	9003934	(002594–)	Tank, Fuel, 11.2gal, Dsl, Replmt, Na[08]	1
▲	18	1033897	(002594–)	Gasket, Sender, Fuel	1
▲	19	1033901	(002594–)	Send–Unit, Fuel [2007]	1
▲	20	1032812	(002594–)	Cap, Fuel, Tank	1
▲	21	48126	(002594–)	Fitting, Pipe, Plug, Pm02, Sq Head	1
▽	17	9003958	(002594–)	Tank, Fuel, 11.2gal, Dsl, Replmt, Tj[08] (Japan Only)	1
▲	18	1033897	(002594–)	Gasket, Sender, Fuel	1
▲	19	1033901	(002594–)	Send–Unit, Fuel [2007]	1
▲	20	1032812	(002594–)	Cap, Fuel, Tank	1
▲	21	48126	(002594–)	Fitting, Pipe, Plug, Pm02, Sq Head	1

Fig. 13 – Engine Fuel Line Group, Diesel

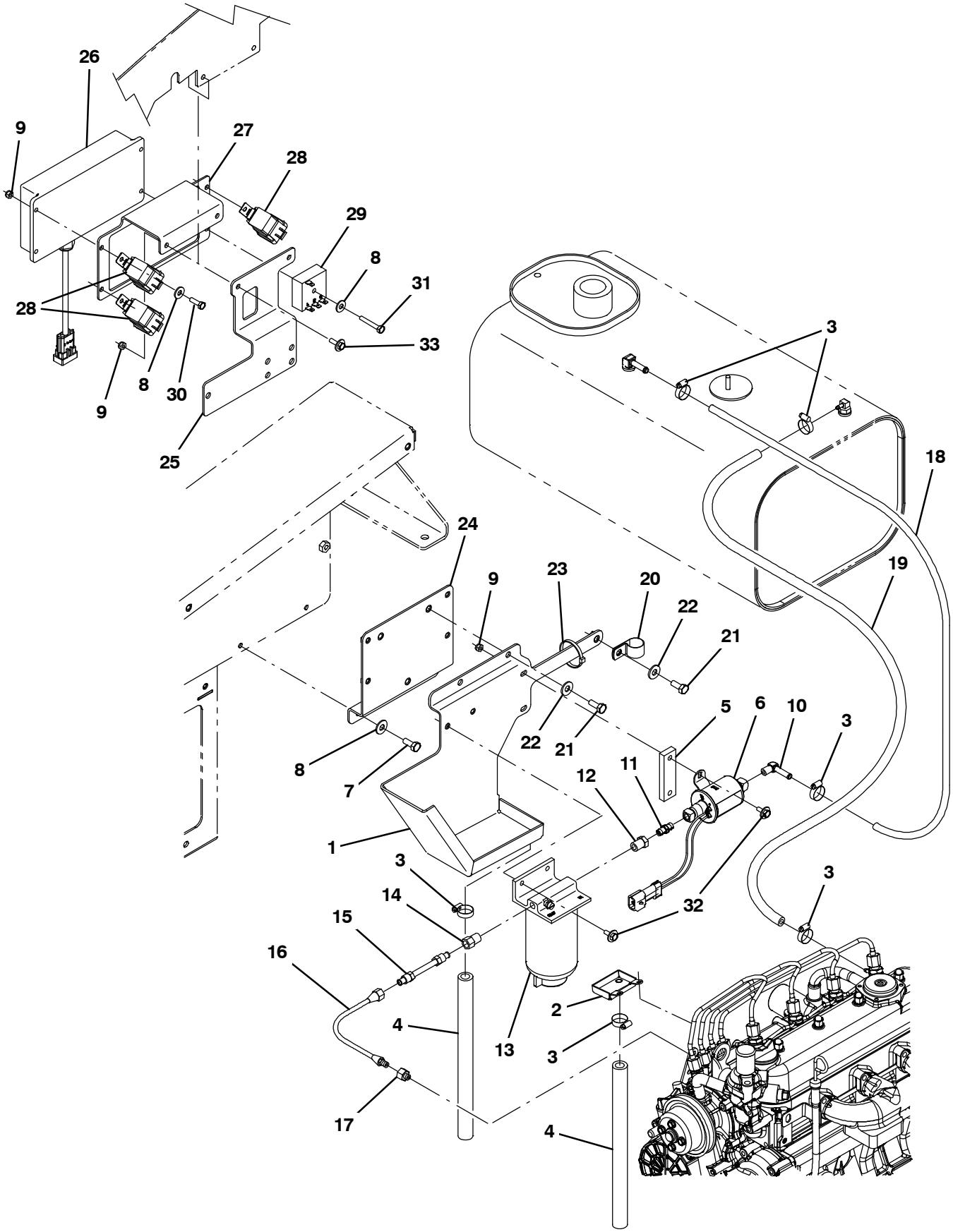

354488

Fig. 13 – Engine Fuel Line Group, Diesel

	Ref.	Part No.	Serial Number	Description	Qty.
	1	1032512	(000000–)	Tray Wldt, Drip, Dsl	1
	2	1032424	(000000–)	Tray Wldt, Drip, Fuel	1
	3	54333	(000000–)	Clamp, Hose, Wormdrive, 0.31–0.88d, .31w	6
	4	1006416	(000000–)	Hose, Afmkt, Pvc, Clr 0.38id 03ft	1
	5	364779	(000000–)	Bar, Flat, Stl 0.38, 01.00 X 03.3l	1
	6	59015	(000000–)	Pump, Fuel	1
	7	06942	(000000–)	Screw, Hex, M6 X 1.0 X 16, 8.8	2
	8	32490	(000000–)	Washer, Flat, 0.25, Std	6
	9	08708	(000000–)	Nut, Hex, Lock, M6 X 1.00, Nl	10
	10	53029	(000000–)	Fitting, Brs, E90, Em05/Pm02	1
	11	47566	(000000–)	Fitting, Hyd, Str, Pm02/Pm02	1
	12	17414	(000000–)	Fitting, Hyd, Str, Pf02/Pm04	1
▽	13	1016827	(000000–)	Filter Assy, Fuel, Dsl	1
▲		1017126	(000000–)	Element, Fltr, Fuel [Dn]	1
	14	78043	(000000–)	Fitting, Brs, Str, If05/Pm04	1
	15	1024380	(000000–)	Fuelline, .31d 04.0l 05if/05if, Stl	1
	16	70173	(000000–)	Hose, 0050, 04, If05str / Im05str, 10.0	1
	17	365066	(000000–)	Fitting, Hyd, Str, Metric, Om10/If05	1
	18	87738	(000000–)	Hose, Fuel, 0.18id 29.0l	1
	19	365190	(000000–)	Hose, Fuel, 0.31id 22.0l	1
	20	69234	(000000–)	Clamp, Cable, Stl, 1.00d X 0.75w, 1h	1
	21	16931	(000000–)	Screw, Hex, M8 X 1.25 X 20, 8.8	2
	22	32491	(000000–)	Washer, Flat, 0.31, Std	3
	23	49266	(000000–)	Tie, Cable, Nyl, 07.3l .19w 1.8 Max D	2
	24	1029082	(000000–)	Bracket, Mtg, Ecu [M20/T20 2007]	1
	25	1059488	(000000–)	Bracket, Mtg, Coolant, Tank, Dsl [2010]	1
	26	1040835	(000000–)	Control, Govnr [All Purpose]	1
	27	1027922	(000000–)	Bracket, Mtg, Govnr Control, Dsl	1
	28	56186	(000000–)	Relay, 12vdc, 40a, Spdt N/O	3
	29	379656	(000000–)	Timer, 12vdc, 10 Sec	1
	30	06943	(000000–)	Screw, Hex, M6 X 1.0 X 20, 8.8	3
	31	06947	(000000–)	Screw, Hex, M6 X 1.0 X 40, 8.8	1
	32	1040467	(000000–)	Screw, Hex, M6 X 1.00 X 20, 9.8, Sems	4
	33	1036892	(000000–)	Screw, Hex, M6 X 1.00 X 25, 9.8, Sems	2

Fig. 14 – Engine Air Cleaner Group, Diesel

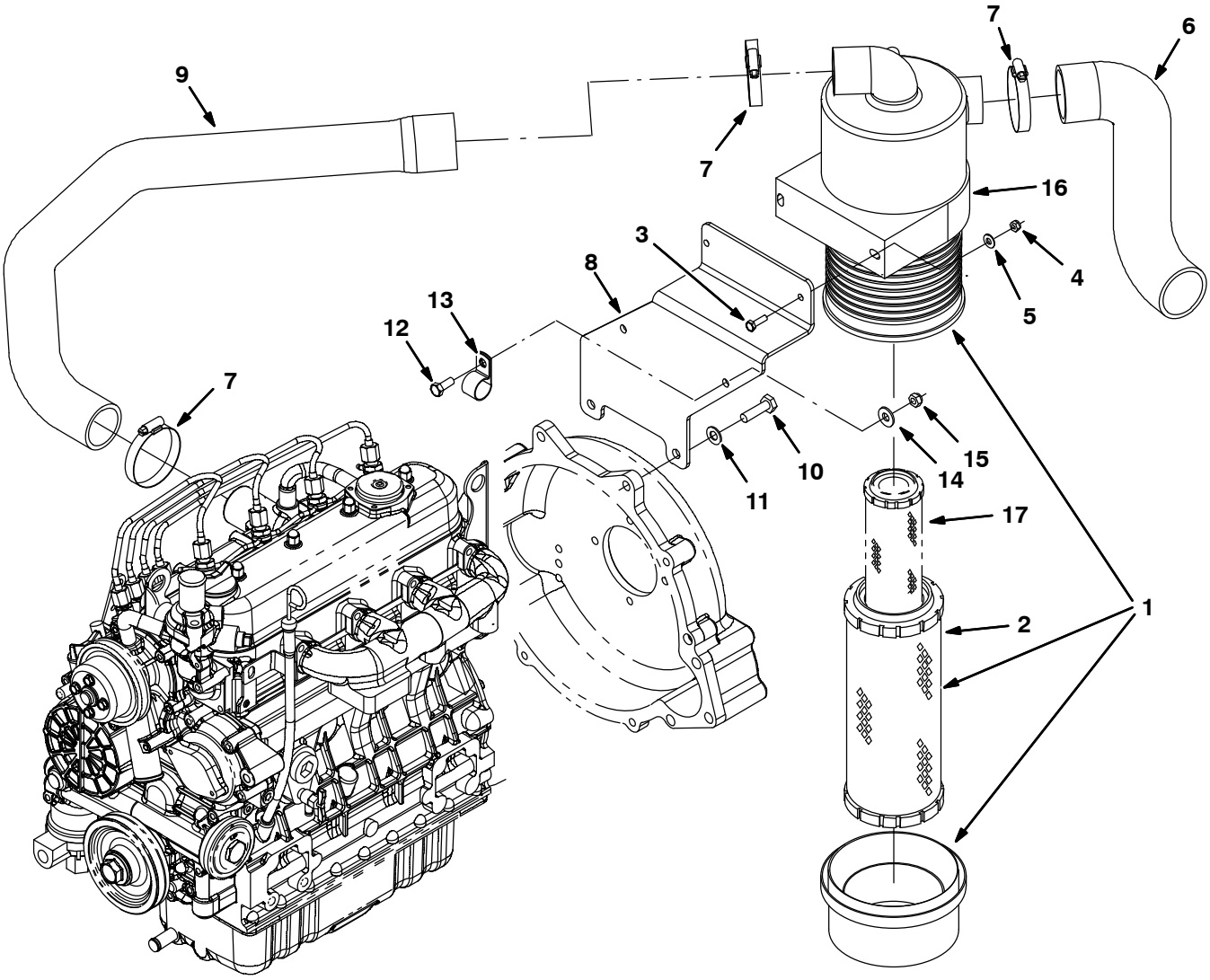

354489 – M20, T20, NA

Fig. 14 – Engine Air Cleaner Group, Diesel

	Ref.	Part No.	Serial Number	Description	Qty.
▽	1	369745	(000000–)	Filter Assy, Air	1
▲	2	369746	(000000–)	Element, Fltr, Air [Dn]	1
	3	06943	(000000–)	Screw, Hex, M6 X 1.0 X 20, 8.8	2
	4	08708	(000000–)	Nut, Hex, Lock, M6 X 1.00, Nl	2
	5	32483	(000000–)	Washer, Flat, 0.25, Sae	2
	6	1020949	(000000–)	Hose, Intake, Mold, 2.00id [Epdm]	1
	7	14432	(000000–)	Clamp, Hose, Wormdrive, 1.81–2.75d, .50w	3
	8	1024772	(000000–)	Bracket, Mtg, Air Fltr, Dsl	1
	9	1023892	(000000–)	Hose, Intake, Mold, 1.75id 1.75id Dsl	1
	10	39284	(000000–)	Screw, Hex, M10 X 1.5 X 35, 8.8	2
	11	32485	(000000–)	Washer, Flat, 0.38, Sae	2
	12	09740	(000000–)	Screw, Hex, M8 X 1.25 X 20, Ss	1
	13	69234	(000000–)	Clamp, Cable, Stl, 1.00d X 0.75w, 1h	1
	14	01685	(000000–)	Washer, Flat, 0.31, Ss	1
	15	08713	(000000–)	Nut, Hex, Lock, M8 X 1.25, Nl, Ss	1
	16	369747	(000000–)	Clamp, Mtg, Fltr, Air	1
	17	398279	(000000–)	Element, Fltr, Air, Safety (Option)	1

Fig. 15 – Engine Alternator Group, Diesel (000000–002547)

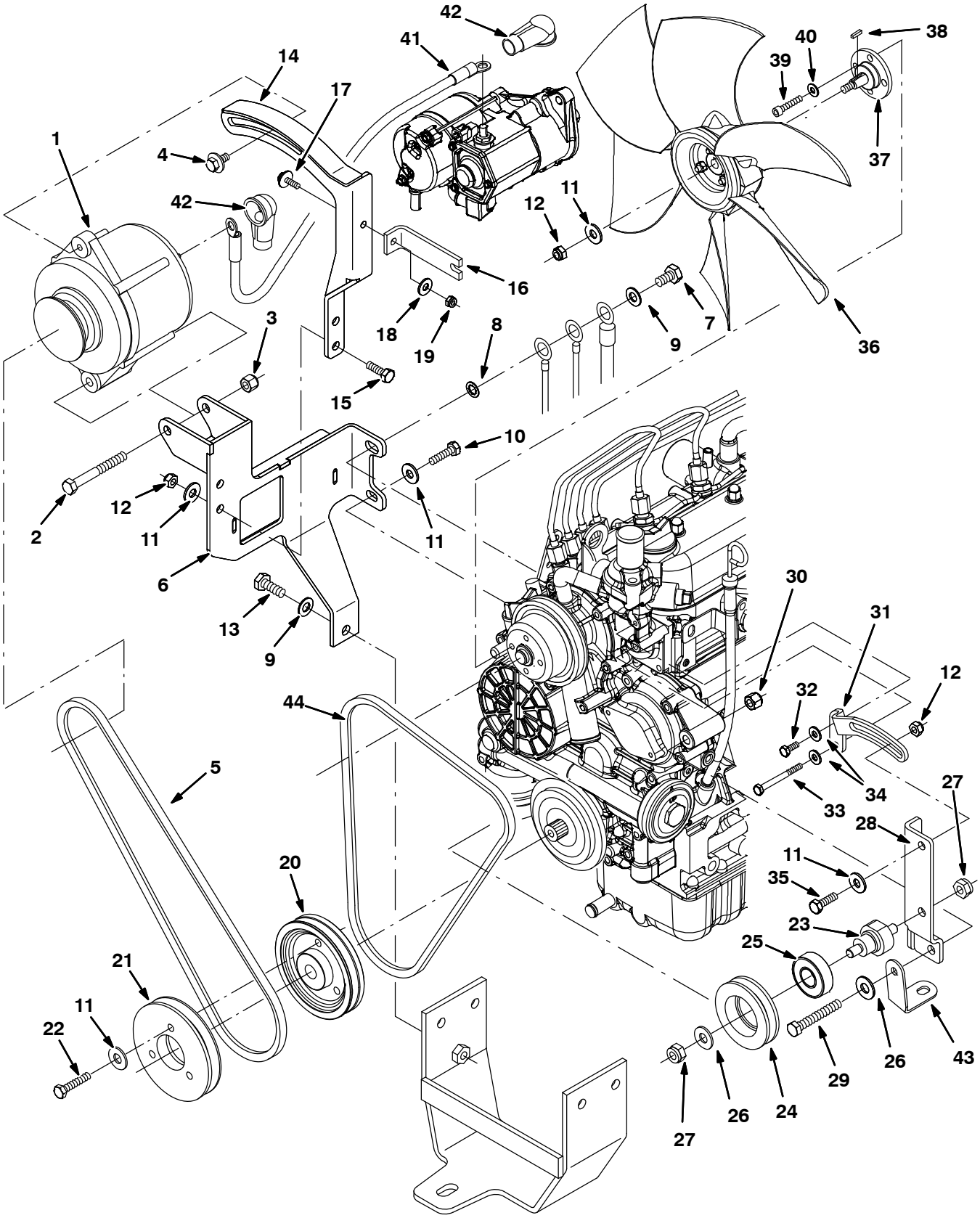

354490

Fig. 15 – Engine Alternator Group, Diesel (000000–002547)

Ref.	Part No.	Serial Number	Description	Qty.
1	392611	(000000–002547)	Alternator, 12vdc, 075a [Valeo]	1
2	35707	(000000–002547)	Screw, Hex, .38–16 X 3.00, G5	1
3	59156	(000000–002547)	Nut, Hex, Lock, .38–16, Nl, Ss	1
4	16953	(000000–002547)	Screw, Hex, .31–18 X 0.75, Sems	1
5	1023911	(000000–002547)	Belt, V, 37.5l [3v]	1
6	1023943	(000000–002547)	Bracket Wldt, Mtg, Alternator, Dsl	1
7	33612	(000000–002547)	Screw, Hex, M10 X 1.25 X 35, 8.8	1
8	32988	(000000–002547)	Washer, Lock, Int, 0.38	1
9	32485	(000000–002547)	Washer, Flat, 0.38, Sae	2
10	76570	(000000–002547)	Screw, Hex, M8 X 1.25 X 30, 8.8	1
11	32491	(000000–002547)	Washer, Flat, 0.31, Std	7
12	08709	(000000–002547)	Nut, Hex, Lock, M8 X 1.25, Nl	3
13	39283	(000000–002547)	Screw, Hex, M10 X 1.5 X 25, 8.8	1
14	1028667	(000000–002547)	Arm Wldt, Alternator, Dsl	1
15	39277	(000000–002547)	Screw, Hex, M8 X 1.25 X 25, 8.8	2
16	1028420	(000000–002547)	Bracket, Sppt, Alternator, Dsl	1
17	06943	(000000–002547)	Screw, Hex, M6 X 1.0 X 20, 8.8	1
18	32490	(000000–002547)	Washer, Flat, 0.25, Std	1
19	08708	(000000–002547)	Nut, Hex, Lock, M6 X 1.00, Nl	1
20	393371	(000000–002547)	Sheave, 01grv, Rwk 393400 [3v]	1
21	393370	(000000–002547)	Sheave, 01grv, 04.1pd 1.6b [Xl]	1
22	76957	(000000–002547)	Screw, Hex, .31–18 X 1.50, G5	3
23	1024213	(000000–002547)	Shaft, Mtg, Sheave, Dsl	1
24	1024211	(000000–002547)	Sheave, 01grv, 02.6pd 0.63b [Hc41]	1
25	46390	(000000–002547)	Bearing, Ball, 0.79b 1.85d 0.55w	1
26	32492	(000000–002547)	Washer, Flat, 0.38, Std	2
27	41430	(000000–002547)	Nut, Hex, Lock, M10 X 1.5, Nl	2
28	1024206	(000000–002547)	Bracket, Mtg, Sheave, Dsl	1
29	35707	(000000–002547)	Screw, Hex, .38–16 X 3.00, G5	1
30	50902	(000000–002547)	Nut, Hex, Lock, .38–16, Nl	1
31	1024264	(000000–002547)	Arm, Alternator, Dsl	1
32	06942	(000000–002547)	Screw, Hex, M6 X 1.0 X 16, 8.8	1
33	06548	(000000–002547)	Screw, Hex, M6 X 1.0 X 60, 8.8	1
34	32483	(000000–002547)	Washer, Flat, 0.25, Sae	4
35	39277	(000000–002547)	Screw, Hex, M8 X 1.25 X 25, 8.8	1
36	1031566	(000000–002547)	Fan, Cooling, 14.1d, 6 Blade, 0.5b Taper	1
37	1035341	(000000–002547)	Spacer, Fan, Dsl [M20/T20]	1
38	00960	(000000–002547)	Key, Sq, 0.12 X 0.12, 0.50l	1
39	71388	(000000–002547)	Screw, Soc, M6 X 1.00 X 16, 12.9	4
40	19066	(000000–002547)	Washer, Flat, #10	4
41	1029689	(000000–002547)	Cable, 06ga 16.0l Red .38ring /.38ring	1
42	1016314	(000000–002547)	Boot, 90deg .50id 1.00id 2.50l, Red	2
43	1033697	(000000–002547)	Bracket, Clamp, Hose	1
44	1038035	(000000–002547)	Belt, v, 37.0L [3V]	1

Fig. 16 – Engine Alternator Group, Diesel (002548–)

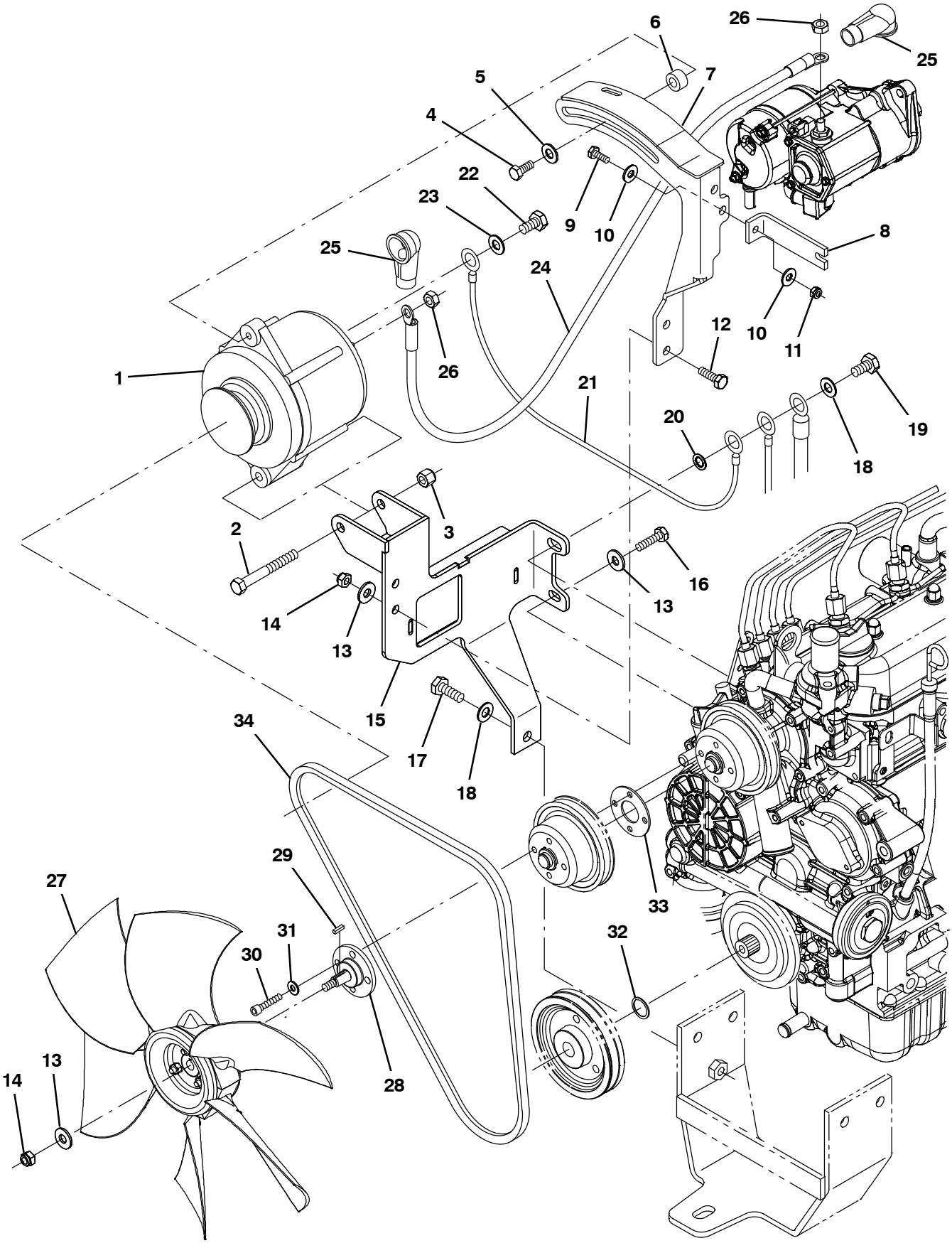

354490

Fig. 16 – Engine Alternator Group, Diesel (002548–)

Ref.	Part No.	Serial Number	Description	Qty.
1	392611	(002548–)	Alternator, 12vdc, 075a [Valeo]	1
2	35707	(002548–)	Screw, Hex, .38–16 X 3.00, G5	1
3	59156	(002548–)	Nut, Hex, Lock, .38–16, Nl, Ss	1
4	76955	(002548–)	Screw, Hex, .31–18 X 1.00, G5	1
5	41186	(002548–)	Washer, Flat, Belleville, .31	1
6	73737	(002548–)	Tube, 0.38id 0.75od 00.3l, Ss	1
7	1036847	(002548–)	Arm Wldt, Alternator, Dsl	1
8	1036859	(002548–)	Bracket, Sppt, Alternator, Dsl	1
9	06943	(002548–)	Screw, Hex, M6 X 1.00 X 20, 8.8	1
10	32483	(002548–)	Washer, Flat, 0.25, Sae	2
11	08708	(002548–)	Nut, Hex, Lock, M6 X 1.00, Nl	1
12	39277	(002548–)	Screw, Hex, M8 X 1.25 X 25, 8.8	2
13	32491	(002548–)	Washer, Flat, 0.31, Std	4
14	08709	(002548–)	Nut, Hex, Lock, M8 X 1.25, Nl	3
15	1036844	(002548–)	Bracket Wldt, Mtg, Alternator, Dsl	1
16	76570	(002548–)	Screw, Hex, M8 X 1.25 X 30, 8.8	1
17	39283	(002548–)	Screw, Hex, M10 X 1.50 X 25, 8.8	1
18	32492	(002548–)	Washer, Flat, 0.38, Std	2
19	33612	(002548–)	Screw, Hex, M10 X 1.25 X 35, 8.8	1
20	32988	(002548–)	Washer, Lock, Int, 0.38	1
21	31525	(002548–)	Wire, 10ga 16.0l Blk .25ring /.38ring	1
22	42011	(002548–)	Screw, Hex, 10–24 X 0.50, Ss	1
23	01683	(002548–)	Washer, Flat, 10, Ss	1
24	1029689	(002548–)	Cable, 06ga 16.0l Red .38ring /.38ring	1
25	1016314	(002548–)	Boot, 90deg .50id 1.00id 2.50l, Red	2
26	41361	(002548–)	Nut, Hex, Std, M8 X 1.25, Brs	2
27	1031566	(002548–)	Fan, Cooling, 14.1d, 6 Blade, 0.5b Taper	1
28	1035341	(002548–)	Spacer, Fan, Dsl [M20/T20]	1
29	00960	(002548–)	Key, Sq, 0.12 X 0.12, 0.50l	1
30	71388	(002548–)	Screw, Soc, M6 X 1.00 X 16, 12.9	4
31	19066	(002548–)	Washer, Flat, 10	4
32	1039208	(002548–)	Washer, Flat, 1.10b 1.50d .12, Stl, Pl	1
33	1039212	(002548–)	Spacer, Fan	1
34	393244	(002548–)	Belt, V, 42.0l [Hc41]	1

Fig. 17 - Engine Muffler Group, Diesel

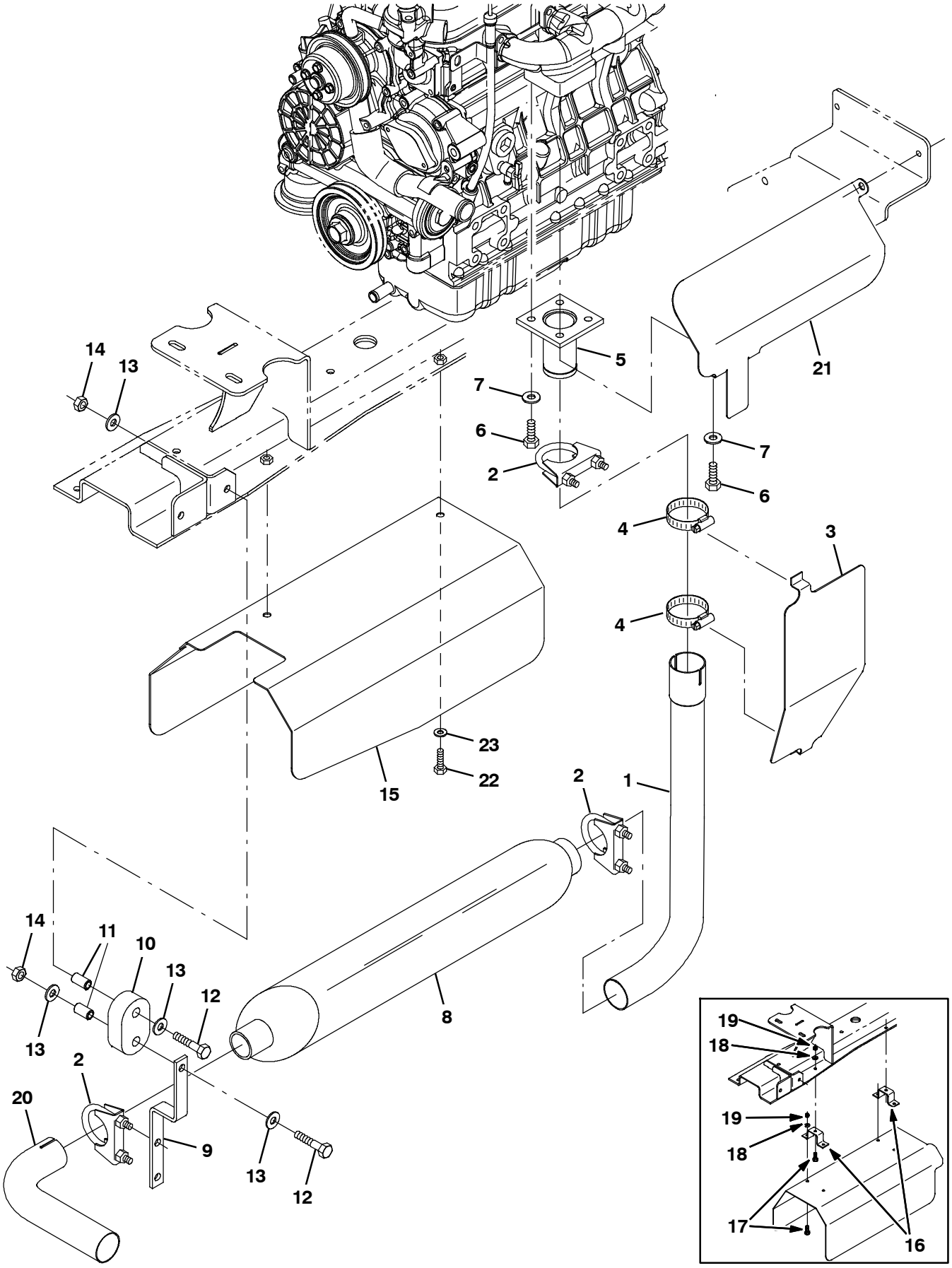

354491

Fig. 17 – Engine Muffler Group, Diesel

Ref.	Part No.	Serial Number	Description	Qty.
1	1024357	(000000–)	Tube, Exhaust, Dsl	1
2	24012	(000000–)	Clamp, Muffler, 1.62d	3
3	9002411	(000000–)	Plate, Shield, Heat, Dsl, Replmt	1
4	79381	(000000–)	Clamp, Hose, Wormdrive, 1.25–2.00D, .50W	2
5	74452	(000000–)	Tube Wldt, Exhaust, 1.5d, 4 Hole Flng	1
6	16931	(000000–)	Screw, Hex, M8 X 1.25 X 20, 8.8	4
7	32491	(000000–)	Washer, Flat, 0.31, Std	4
8	33333	(000000–)	Muffler, Exhaust	1
9	1017969	(000000–)	Bracket, Muffler, Hanger, Front	1
10	1013031	(000000–)	Isolator, Rbr	1
11	222496	(000000–)	Sleeve, P/M, 0.31b 0.50d 0.9l [430ss]	2
12	222505	(000000–)	Screw, Hex, M8 X 1.25 X 45, Ss	2
13	01685	(000000–)	Washer, Flat, 0.31, Ss	4
14	08713	(000000–)	Nut, Hex, Lock, M8 X 1.25, Nl, Ss	2
15	1028994	(000000–)	Channel, Shield, Muffler [M20/T20 2007]	1
16	1022113	(000000–001412)	Bracket, Retainer, Shield, Heat	2
17	08716	(000000–001412)	Screw, Hex, M6 X 1.0 X 20, Ss	6
18	32483	(000000–001412)	Washer, Flat, 0.25, Sae	6
19	08712	(000000–001412)	Nut, Hex, Lock, M6 X 1.00, Ss, Nl	6
20	1021789	(000000–)	Tube, Exhaust, 1.5d	1
21	1032010	(000000–)	Shield, Heat, Dsl	1
22	08716	(001413–)	Screw, Hex, M6 X 1.0 X 20, Ss	2
23	32483	(001413–)	Washer, Flat, 0.25, Sae	2

Fig. 18 – Engine Radiator Group, Diesel (000000–003038)

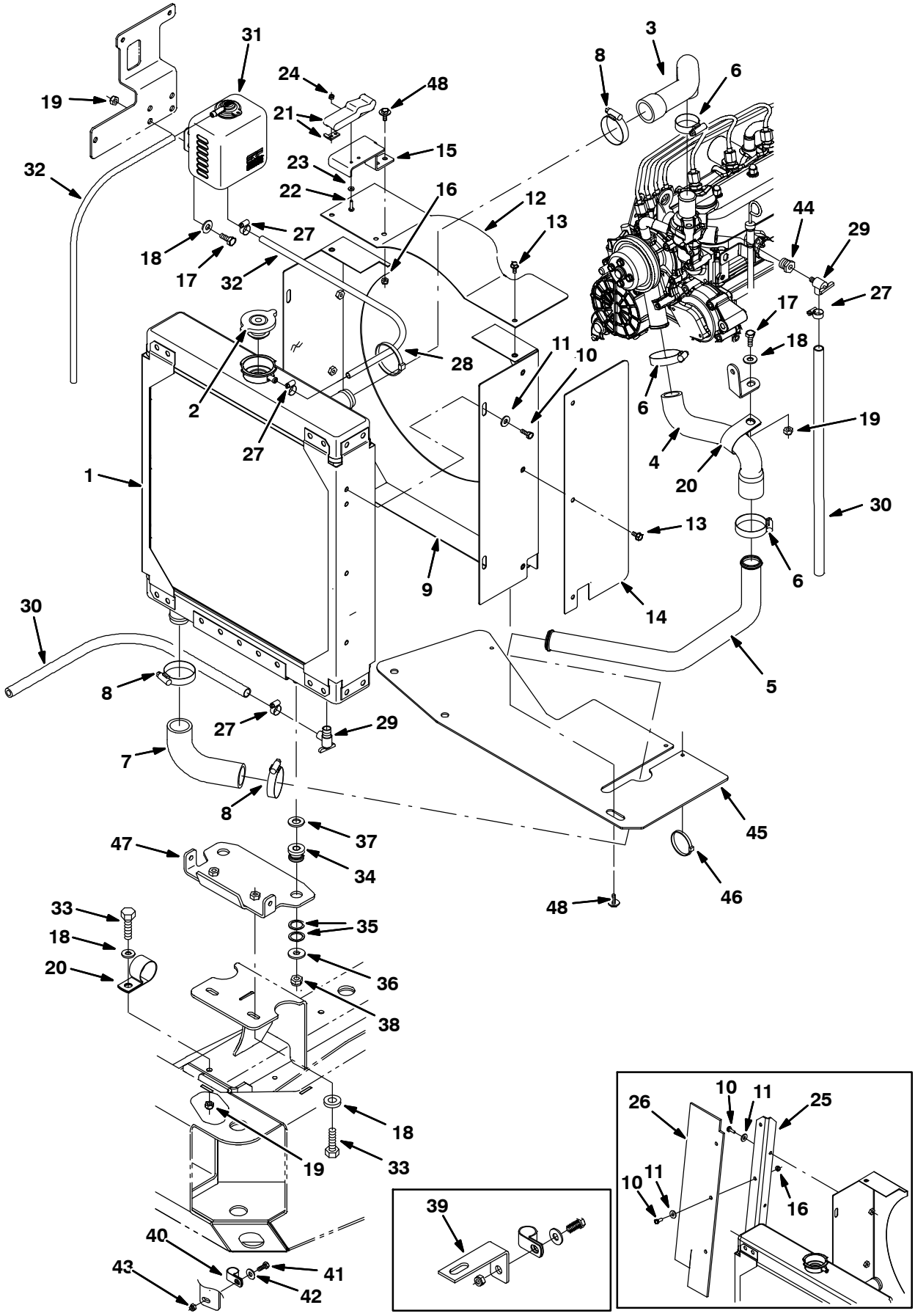

354492

Fig. 18 – Engine Radiator Group, Diesel (000000–003038)

Ref.	Part No.	Serial Number	Description	Qty.
1	1045316	(000000–003038)	Radiator Kit, Replmt, Ci	1
2	368132	(000000–003038)	Cap, Radiator, 15psi	1
3	1023154	(000000–003038)	Hose, Radiator, Upper, Dsl	1
4	1033688	(000000–003038)	Hose, Radiator, Lower, Dsl	1
5	1023180	(000000–003038)	Tube, Radiator, Lower, Dsl	1
6	11399	(000000–003038)	Clamp, Hose, Wormdrive, 0.81–1.50d, .50w	3
7	1007482	(000000–003038)	Hose, Rbr, E90 1.25id 1.25id 04.2 03.1	1
8	79381	(000000–003038)	Clamp, Hose, Wormdrive, 1.25–2.00D, .50W	3
9	1023810	(000000–003038)	Panel, Shrd, Fan, Dsl	1
10	06942	(000000–003038)	Screw, Hex, M6 X 1.0 X 16, 8.8	9
11	32490	(000000–003038)	Washer, Flat, 0.25, Std	9
12	1024028	(000000–003038)	Plate, Guard, Fan Shrd, Dsl	1
13	74455	(000000–003038)	Screw, Hex, M6 X 1.0 X 12, Fmg	5
14	9002412	(000000–003038)	Plate, Guard, Fan, Shrd, Dsl, Replmt	1
15	1027112	(000000–003038)	Bracket, Mtg, Latch, Dsl	1
16	08708	(000000–003038)	Nut, Hex, Lock, M6 X 1.00, Nl	5
17	16931	(000000–003038)	Screw, Hex, M8 X 1.25 X 20, 8.8	5
18	32491	(000000–003038)	Washer, Flat, 0.31, Std	8
19	08709	(000000–003038)	Nut, Hex, Lock, M8 X 1.25, Nl	6
20	53466	(000000–003038)	Clamp, Cable, Stl, 1.50d X 1.00w, 1h	2
21	49800	(000000–003038)	Latch	1
22	06927	(000000–003038)	Screw, Pan, M4 X 0.70 X 16, 4.8	2
23	19064	(000000–003038)	Washer, Flat, #06	2
24	02850	(000000–003038)	Nut, Hex, Lock, M4 X 0.70, Nl	2
25	1027099	(000000–001261)	Plate, Mtg, Seal	1
26	1027103	(000000–001261)	Seal, Radiator	1
27	43844	(000000–003038)	Clamp, Hose, Wormdrive, 0.25–0.62d, .31w	4
28	49266	(000000–003038)	Tie, Cable, Nyl, 07.3l .19w 1.8 Max D	2
29	51305	(000000–003038)	Fitting, Draincock, E90, .25npt	2
30	73471	(000000–003038)	Hose, Pvc, Clr, 0.38id 0.56od 22.00l	2
31	1023853	(000000–003038)	Tank, Coolant, 04.7 03.3 4.7deep, 1liter	1
32	1015041	(000000–003038)	Hose, Afmkt, Coolant Recvy, 05ft	1
33	39277	(000000–003038)	Screw, Hex, M8 X 1.25 X 25, 8.8	3
34	54274	(000000–003038)	Isolator, Vib, Bshg, 1.1d 0.6l .4b 0.78h	2
35	09832	(000000–003038)	Washer, Flat, 0.81b 1.06d .06, Stl	4
36	1014563	(000000–003038)	Washer, Flat, 0.40b 1.12d .12, Ss	2
37	32486	(000000–003038)	Washer, Flat, 0.50, Sae	2
38	41430	(000000–003038)	Nut, Hex, Lock, M10 X 1.5, Nl	2
39	1026003	(000000–002241)	Bracket, Ftg, Bh	1
40	67767	(000000–003038)	Clamp, Cable, Stl, 0.69d X 0.62w, 1h	1
41	09740	(000000–003038)	Screw, Hex, M8 X 1.25 X 20, Ss	1
42	01685	(000000–003038)	Washer, Flat, 0.31, Ss	1
43	08713	(000000–003038)	Nut, Hex, Lock, M8 X 1.25, Nl, Ss	1
44	150006	(000000–003038)	Fitting, Brs, Str, Pf04/Pm06, Bshg	1
45	1035878	(000000–003038)	Skirt, Debris, Eng Radiator	1
46	763116	(000000–003038)	Tie, Cable, Nyl, 15.3l . W 4.5 Max D	1
47	1035976	(001338–003038)	Bracket, Sppt, Radiator, Upper	1
48	1040467	(000000–003038)	Screw, Hex, M6 X 1.00 X 20, 9.8, Sems	4

Fig. 19 – Engine Radiator Group, Diesel (003039–006127)

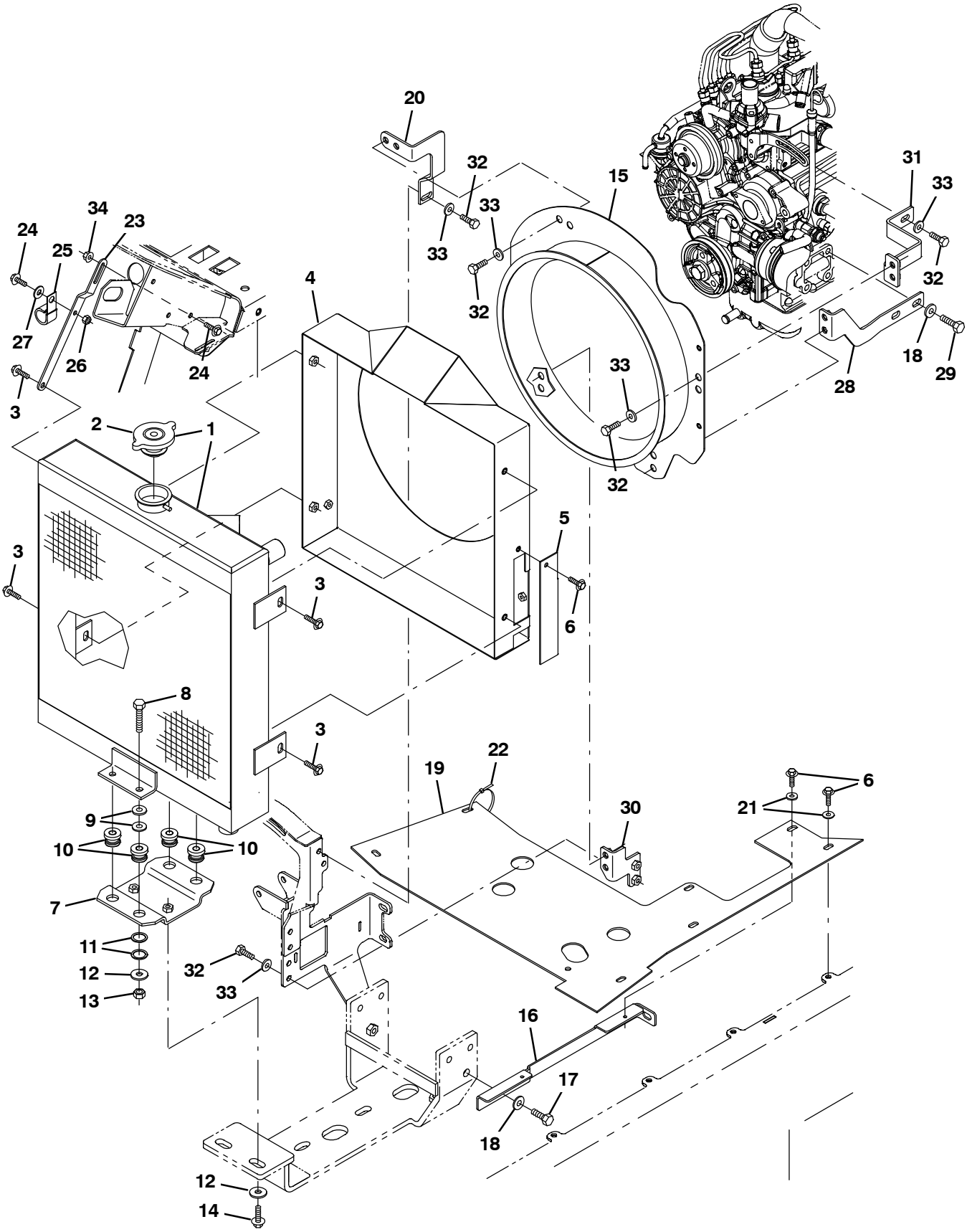

356022

Fig. 19 – Engine Radiator Group, Diesel (003039–006127)

	Ref.	Part No.	Serial Number	Description	Qty.
▽	1	1045940	(003039–006127)	Radiator, W/ Hyd Cooler [Side X Side]	1
▲	2	1045764	(003039–006127)	Cap, Radiator, 14Psi [Stant]	1
	3	1037346	(003039–006127)	Screw, Hex, M8 X 1.25 X 25, 9.8, Sems	4
	4	9006814	(003039–006127)	Shrd Wldt,Fan,Dsl, Replmt [M20/M30/T20]	1
	4	9006816	(003039–006127)	Shrd Wldt,Fan,Dsl, Replmt [Tj]	1
	5	1045433	(003039–006127)	Bracket, Cover	1
	6	1036892	(003039–006127)	Screw, Hex, M6 X 1.00 X 25, 9.8 Sems	6
	7	1046962	(003039–006127)	Bracket, Mtg, Radiator	1
	8	39285	(003039–006127)	Screw, Hex, M10 X 1.50 X 40, 8.8	4
	9	32492	(003039–006127)	Washer, Flat, 0.38, Std	8
	10	54274	(003039–006127)	Isolator, Vib, Bshg, 1.1d 0.6l .4b 0.78h	4
	11	09832	(003039–006127)	Washer, Flat, 0.81b 1.06d .06, Stl	8
	12	1014563	(003039–006127)	Washer, Flat, 0.40b 1.12d .12, Ss	6
	13	41430	(003039–006127)	Nut, Hex, Lock, M10 X 1.5, Nl	4
	14	1037355	(003039–006127)	Screw, Hex, M8 X 1.25 X 35, 9.8, Sems	2
	15	1046801	(003039–006127)	Shroud Wldt, Fan, Dsl	1
	16	1052164	(003039–006127)	Bracket, Sppt	1
	17	39283	(003039–006127)	Screw, Hex, M10 X 1.50 X 25, 8.8	1
	18	32485	(003039–006127)	Washer, Flat, 0.38, Sae	3
	19	1052175	(003039–006127)	Skirt, Fan, Eng, Dsl	1
	20	1053143	(003039–006127)	Bracket, Shrd, Fan, Upper, Dsl	1
	21	41178	(003039–006127)	Washer, Flat, 0.25, Fendr	3
	22	49266	(003039–006127)	Tie, Cable, Nyl, 07.3l .19w 1.8 Max D	2
	23	1019968	(003039–006127)	Bracket, Mtg, Radiator	1
	24	1040467	(003039–006127)	Screw, Hex, M6 X 1.00 X 20, 9.8, Sems	2
	25	30407	(003039–006127)	Clip, Keeper, Open	1
	26	08708	(003039–006127)	Nut, Hex, Lock, M6 X 1.00, Nl	1
	27	32490	(003039–006127)	Washer, Flat, 0.25, Std	1
	28	1046247	(003039–006127)	Bracket, Shrd, Fan, Lh	1
	29	07299	(003039–006127)	Screw, Hex, M10 X 1.25 X 25, 8.8	2
	30	1046261	(003039–006127)	Bracket, Shrd, Fan, Rh	1
	31	1046282	(003039–006127)	Bracket, Shrd, Fan, Upper, Lh	1
	32	16931	(003039–006127)	Screw, Hex, M8 X 1.25 X 20, 8.8	13
	33	32491	(003039–006127)	Washer, Flat, 0.31, Std	13
	34	07790	(003039–006127)	Nut, Hex, Flng, M6 X 1.00	1

Fig. 20 – Engine Radiator Group, Diesel (006128–)

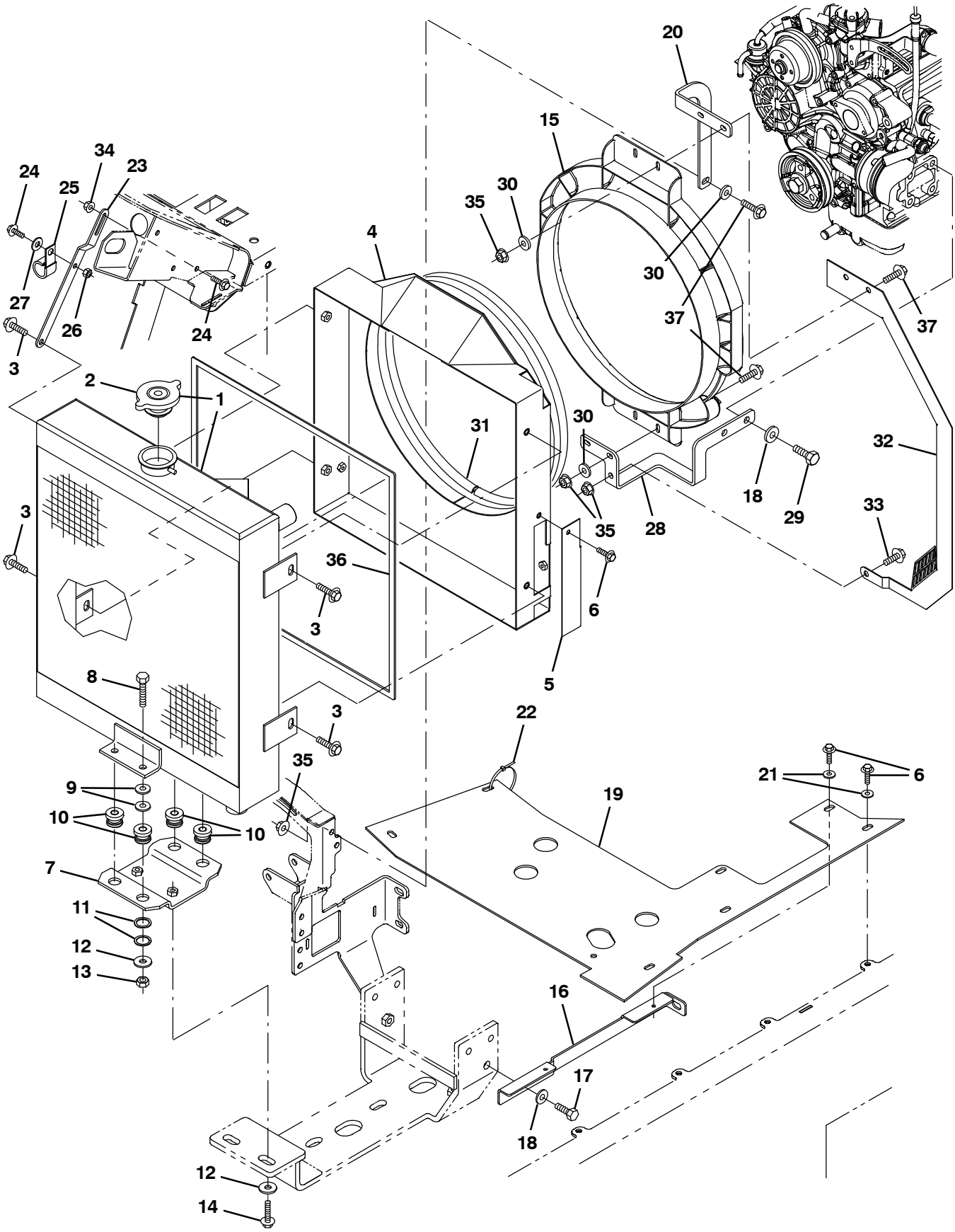

356022

Fig. 20 – Engine Radiator Group, Diesel (006128–)

	Ref.	Part No.	Serial Number	Description	Qty.
▽	1	1045940	(006128–)	Radiator, W/ Hyd Cooler [Side X Side]	1
▲	2	1045764	(006128–)	Cap, Radiator, 14Psi [Stant]	1
	3	1037346	(006128–)	Screw, Hex, M8 X 1.25 X 25, 9.8, Sems	4
	4	1058699	(006128–)	Shroud Wldt, Fan, Eng, Dsl	1
	5	1045433	(006128–)	Bracket, Cover	1
	6	1036892	(006128–)	Screw, Hex, M6 X 1.00 X 25, 9.8 Sems	6
	7	1046962	(006128–)	Bracket, Mtg, Radiator	1
	8	39285	(006128–)	Screw, Hex, M10 X 1.50 X 40, 8.8	4
	9	32492	(006128–)	Washer, Flat, 0.38, Std	8
	10	54274	(006128–)	Isolator, Vib, Bshg, 1.1d 0.6l .4b 0.78h	4
	11	09832	(006128–)	Washer, Flat, 0.81b 1.06d .06, Stl	8
	12	1014563	(006128–)	Washer, Flat, 0.40b 1.12d .12, Ss	6
	13	41430	(006128–)	Nut, Hex, Lock, M10 X 1.5, Nl	4
	14	1037355	(006128–)	Screw, Hex, M8 X 1.25 X 35, 9.8, Sems	2
	15	1054428	(006128–)	Shroud, Fan	1
	16	1052164	(006128–)	Bracket, Sppt	1
	17	39283	(006128–)	Screw, Hex, M10 X 1.50 X 25, 8.8	1
	18	32485	(006128–)	Washer, Flat, 0.38, Sae	3
	19	1052175	(006128–)	Skirt, Fan, Eng, Dsl	1
	20	1058732	(006128–)	Bracket, Mtg, Fan, Shrd, Upper, Dsl	1
	21	41178	(006128–)	Washer, Flat, 0.25, Fendr	3
	22	49266	(006128–)	Tie, Cable, Nyl, 07.3l .19w 1.8 Max D	2
	23	1019968	(006128–)	Bracket, Mtg, Radiator	1
	24	1040467	(006128–)	Screw, Hex, M6 X 1.00 X 20, 9.8, Sems	2
	25	30407	(006128–)	Clip, Keeper, Open	1
	26	08708	(006128–)	Nut, Hex, Lock, M6 X 1.00, Nl	1
	27	32490	(006128–)	Washer, Flat, 0.25, Std	1
	28	1058730	(006128–)	Bracket, Mtg, Fan, Shrd, Lower, Dsl	1
	29	07299	(006128–)	Screw, Hex, M10 X 1.25 X 25, 8.8	2
	30	32492	(006128–)	Washer, Flat, 0.38, Std	7
	31	376735	(006128–)	Seal, Bulb, Str, 0.38h .75w Adh, 52 L	1
	32	1064434	(006128–)	Bracket, Shrd, Radiator, Dsl, Ce	1
	33	1020341	(006128–)	Screw, Hex, M8 X 1.25 X 20, Ss, Sems	1
	34	07790	(006128–)	Nut, Hex, Flng, M6 X 1.00	1
	35	07791	(006128–)	Nut, Hex, Flng, M8 X 1.25	6
	36	367812	(006128–)	Seal, Rbr, Clsd, .13, .38w 72.0l, Adh	1
	37	1037346	(006128–)	Screw, Hex, M8 X 1.25 X 25, 9.8, Sems	5

Fig. 21 – Engine Radiator Hose Group, Diesel (003039–)

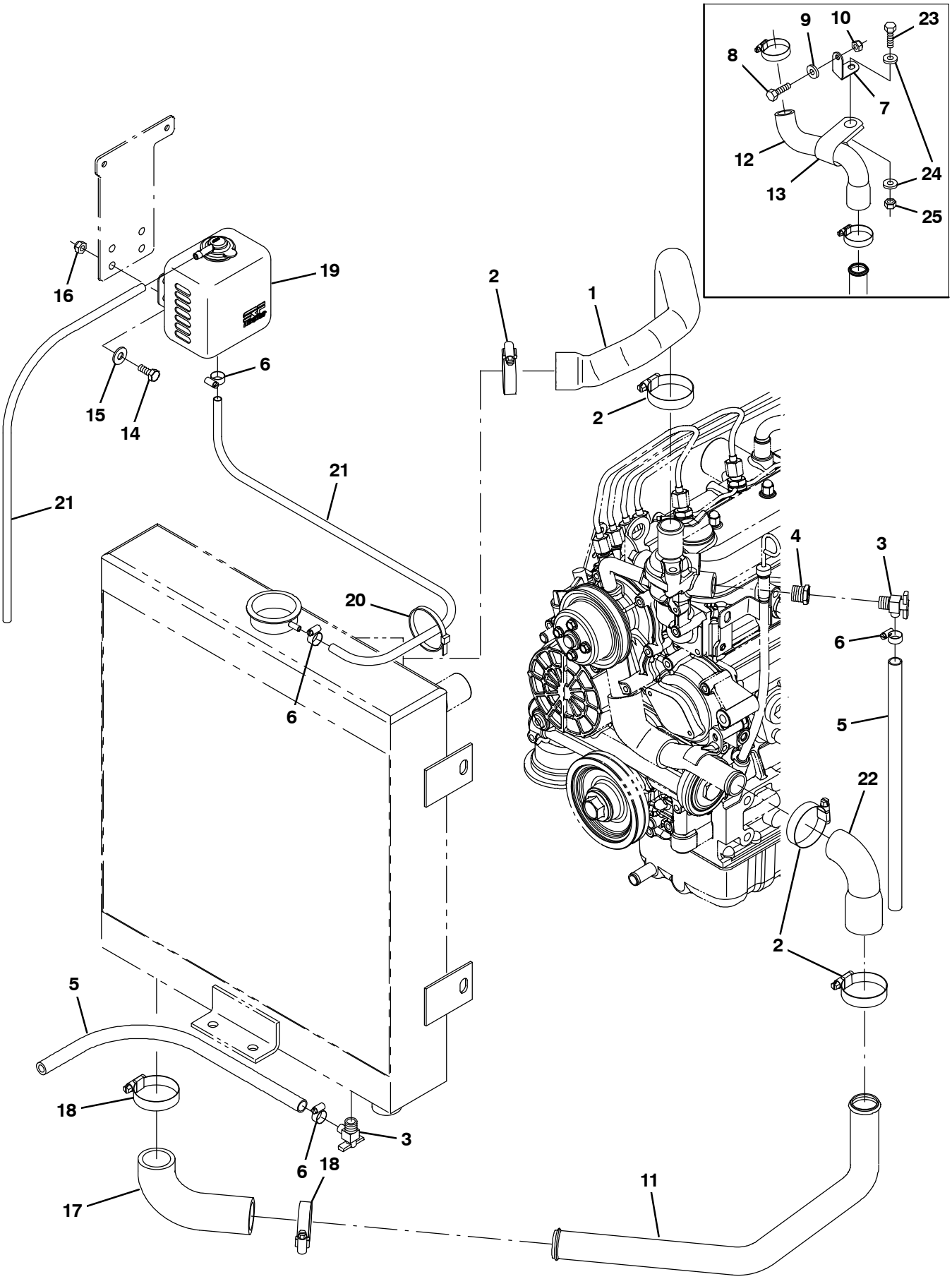

354911

Fig. 21 – Engine Radiator Hose Group, Diesel (003039–)

Ref.	Part No.	Serial Number	Description	Qty.
1	1071195	(003039–)	Hose, Radiator, Upper, Dsl	1
2	11399	(003039–)	Clamp, Hose, Wormdrive, 0.81–1.50d, .50w	4
3	51305	(003039–)	Fitting, Draincock, E90, .25npt	2
4	150006	(003039–)	Fitting, Brs, Str, Pf04/Pm06, Bshg	1
5	73471	(003039–)	Hose, Pvc, Clr, 0.38id 0.56od 022.0l	2
6	43844	(003039–)	Clamp, Hose, Wormdrive, 0.25–0.62d, .31w	4
7	1033697	(003039–xxxxxx)	Bracket, Clamp, Hose	1
8	35707	(003039–xxxxxx)	Screw, Hex, .38–16 X 3.00, G5	1
9	32492	(003039–xxxxxx)	Washer, Flat, 0.38, Std	1
10	50902	(003039–xxxxxx)	Nut, Hex, Lock, .38–16, Nl	1
11	1023180	(003039–)	Tube, Radiator, Lower, Dsl	1
12	1033688	(003039–xxxxxx)	Hose, Radiator, Lower, Dsl	1
13	53466	(003039–xxxxxx)	Clamp, Cable, Stl, 1.50d X 1.00w, 1hole	1
14	16931	(003039–)	Screw, Hex, M8 X 1.25 X 20, 8.8	2
15	32491	(003039–)	Washer, Flat, 0.31, Std	2
16	08709	(003039–)	Nut, Hex, Lock, M8 X 1.25, Nl	2
17	1007482	(003039–)	Hose, Rbr, E90, 1.25id 1.25id 04.2 03.1	1
18	79381	(003039–)	Clamp, Hose, Wormdrive, 1.25–2.00D, .50W	2
19	1023853	(003039–003122)	Tank, Coolant, 03.30w 4.7hi 04.7l,1liter	1
19	1054382	(003123–)	Tank, Coolant, 03.6W 04.1HI 05.5L,1Liter	1
20	49266	(003039–)	Tie, Cable, Nyl, 07.3l .19w 1.8 Max D	2
21	1015041	(003039–)	Hose, Afmkt, Coolant Recvy, 08ft	1
22	1033688	(xxxxxx–003246)	Hose, Radiator, Lower, Dsl (Cut to fit)	1
22	1062103	(003247–)	Hose, Radiator, Lower, Dsl	1
23	16931	(003039–xxxxxx)	Screw, Hex, M8 X 1.25 X 20, 8.8	1
24	32491	(003039–xxxxxx)	Washer, Flat, 0.31, Std	2
25	08709	(003039–xxxxxx)	Nut, Hex, Lock, M8 X 1.25, Nl	1

Fig. 22 – Battery and Electrical Group

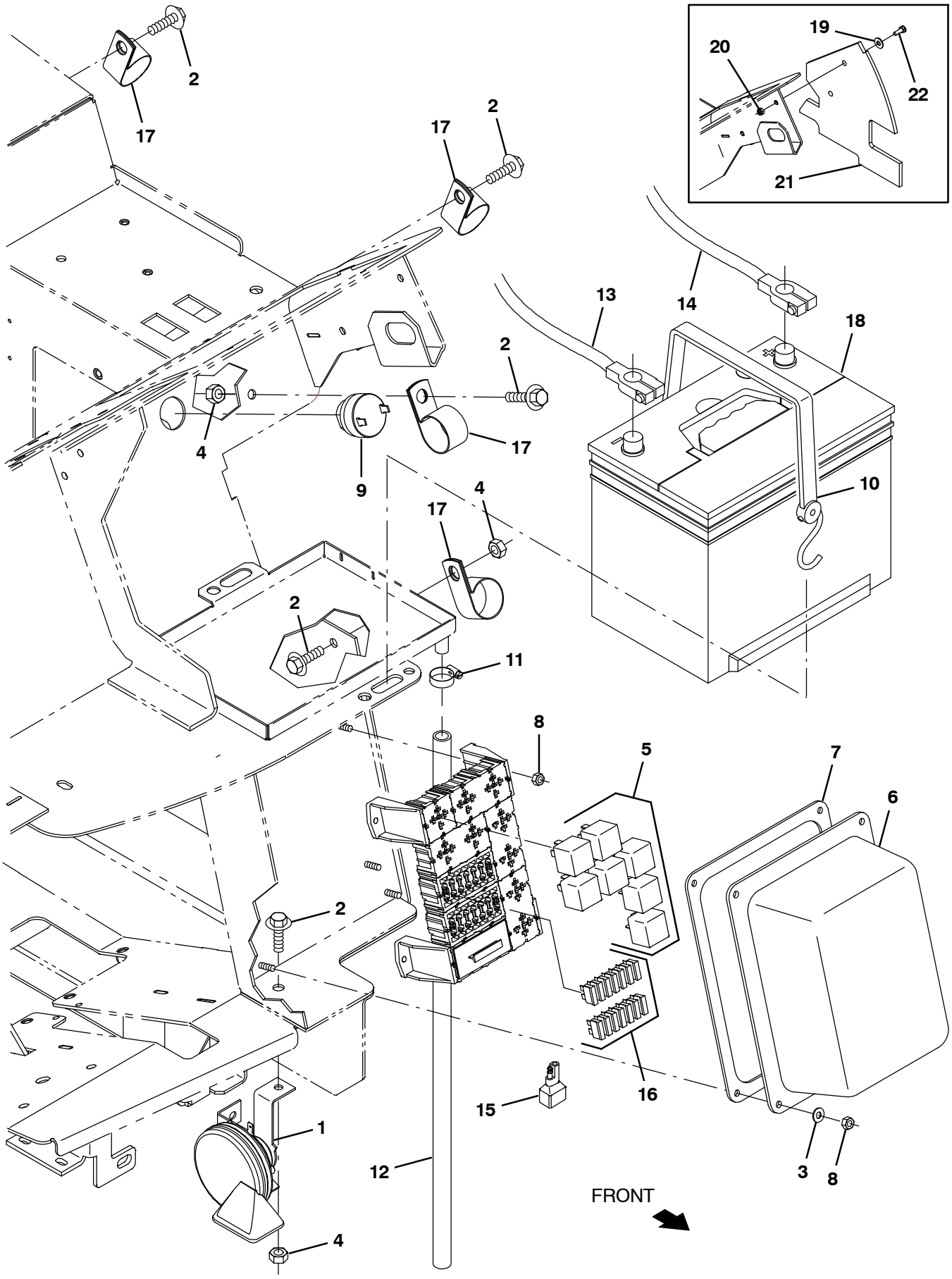

354425 – D

Fig. 22 – Battery and Electrical Group

Ref.	Part No.	Serial Number	Description	Qty.
1	369704	(000000–)	Horn, 12vdc, Dba [Wolo]	1
2	1037346	(000000–)	Screw, Hex, M8 X 1.25 X 25, 9.8, Sems	5
3	19066	(000000–)	Washer, Flat, #10	4
4	08709	(000000–)	Nut, Hex, Lock, M8 X 1.25, Nl	3
5	57804	(000000–)	Relay, 12vdc, 40a, Spdt N/O	7
6	1024274	(000000–)	Cover, Fuse, Block	1
7	1026576	(000000–)	Gasket, Cover, Fuse Block	1
8	06549	(000000–)	Nut, Hex, Lock, M5 X 0.8, Nl	8
9	1021290	(000000–)	Alarm, Warning [Sonalert, St628]	1
10	33671	(000000–)	Strap, Rbr, Tie–Down, 2/Hooks 19.0l	1
11	54333	(000000–)	Clamp, Hose, Wormdrive, 0.31–0.88d, .31w	1
12	20778	(000000–)	Hose, Pvc, Clr, 0.50id 0.69od 30.00l	1
13	60295	(000000–)	Cable, Battery, 02ga 60.0l Blk .41ring	1
14	68869	(000000–)	Cable, Battery, 02ga 48.0l Red .41ring	1
15	222290	(000000–)	Diode, Ele, Plug	1
16	762514	(000000–)	Fuse, 015a	14
17	53466	(000000–)	Clamp, Cable, Stl, 1.50d X 1.00w, 1h	4
18	10143	(000000–)	Battery, Wet, 12Vdc 0600Cca	1
19	32490	(000000–001278)	Washer, Flat, 0.25 Std	2
20	08708	(000000–001278)	Nut, Hex, Lock, M6 X 1.0, Nl	2
21	1027228	(000000–001278)	Seal, Radiator, Upper	1
22	06942	(000000–001278)	Screw, Hex, M6 X 1.0 X 16, 8.8	2

Fig. 23 – Wheel Group, Front Drive

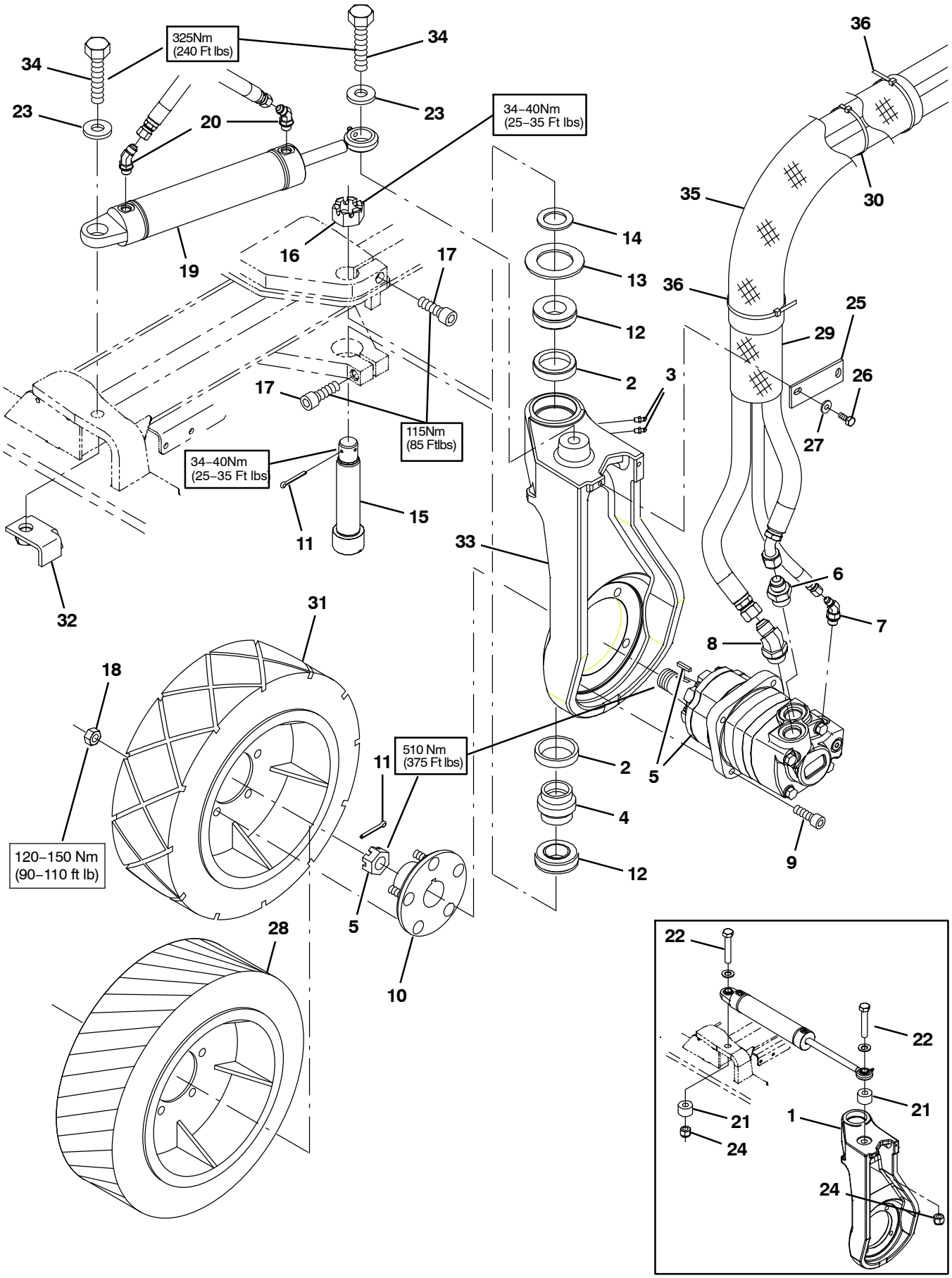

354426

Fig. 23 – Wheel Group, Front Drive

	Ref.	Part No.	Serial Number	Description	Qty.
	1	9008248	(000000–003675)	Housing Kit, Drive, Front, Replmt	1
	2	51338	(000000–)	Bearing, Cup, 2.56d 0.55w	2
	3	47801	(000000–)	Fitting, Grease, Str Pm04 .63l	2
	4	374560	(000000–)	Seal, Drive, Rear, Grease Cav	1
	5	379609	(000000–)	Motor, Hyd, Gear, Int 19.0 Bi–Dir 3000 (See Breakdowns)	1
	6	42223	(000000–)	Fitting, Hyd, Str, Jm10/Om12	1
	7	393215	(000000–)	Fitting, Hyd, E45, Jm04/Om06	1
	8	1024249	(000000–)	Fitting, Hyd, E45, Jm10/Om12	1
	9	19583	(000000–)	Screw, Soc, .50–13 X 1.50, Al	4
▽	10	54087	(000000–)	Hub Assy, Wheel, 5 Bolt 4.50bc Taper B	1
▲		32126	(000000–)	Stud, Wheel, .50–20 X 1.50l, 0.370th	5
	11	08180	(000000–)	Pin, Cotter, .125 X 2.00	2
	12	51339	(000000–)	Bearing, Cone, 1.38b 0.71w	2
	13	374563	(000000–)	Washer, Flat, 2.16b 3.50d .16, Felt	1
	14	54051	(000000–)	Washer, Flat, 1.39b 2.12d .13, Stl	1
	15	73281	(000000–)	Bolt, Shld, 1.37d X 5.13l,1.1–18 Drilled	1
	16	54052	(000000–)	Nut, Hex, Sltd, 1.12–18	1
	17	72926	(000000–)	Screw, Soc, M16 X 2.0 X 50, 12.9	2
	18	24339	(000000–)	Nut, Wheel, .50–20 X 60 Angle	5
	19	1017903	(000000–006885)	Cylinder, Hyd, 2.0b,15.2l,09.00strk,3000	1
	19	1034270	(006886–)	Cylinder, Hyd, 2.0b,15.2l,09.00strk,3000	1
	20	47522	(000000–)	Fitting, Hyd, E45, Jm06/Om06	2
	21	71340	(000000–003675)	Tube, Rnd, 1.75d 0.77b 01.1l, Stl, Pntd	2
	22	71341	(000000–003675)	Screw, Hex, .75–10 X 4.00, 5	2
	23	39350	(000000–006885)	Washer, Flat, 0.75 Sae	2
	23	1073487	(006886–)	Washer, Flat, .781b 1.63od .16, Stl, Blk	2
	24	32987	(000000–003675)	Nut, Hex, Lock, .75–10, Nl	2
	25	58842	(000000–)	Bar, Flat, Stl 0.19, 01.50 X 04.1l	1
	26	16931	(000000–)	Screw, Hex, M8 X 1.25 X 20, 8.8	2
	27	32491	(000000–)	Washer, Flat, 0.31, Std	2
	28	1061973	(000000–)	Tire, Drive, Scrbr, Pu, Grey, 18.0X6.0 (Optional Polyurethane)	1
	29	57315	(000000–)	Sleeve, Nyl, #37 05.0l	2
	30	49266	(000000–)	Tie, Cable, Nyl, 07.3l .19w 1.8 Max D	2
	31	1059343	(000000–)	Tire, Drive, Scrbr, Non–Skid, 18.0X6.0	1
	32	1060521	(003676–)	Bracket, Mtg, Sppt	1
	33	1071061	(003676–)	Housing, Sppt, Front Wheel	1
	34	77345	(003676–)	Screw, Hex, .75–10 X 3.25, G5	1
	35	82832	(006000–)	Sleeve, Nyl, 2.38id 25.0l	1
	36	49266	(006000–)	Tie, Cable, Nyl, 07.3l .19w 1.8 Max D	2

Fig. 24 – Wheel Group, Rear

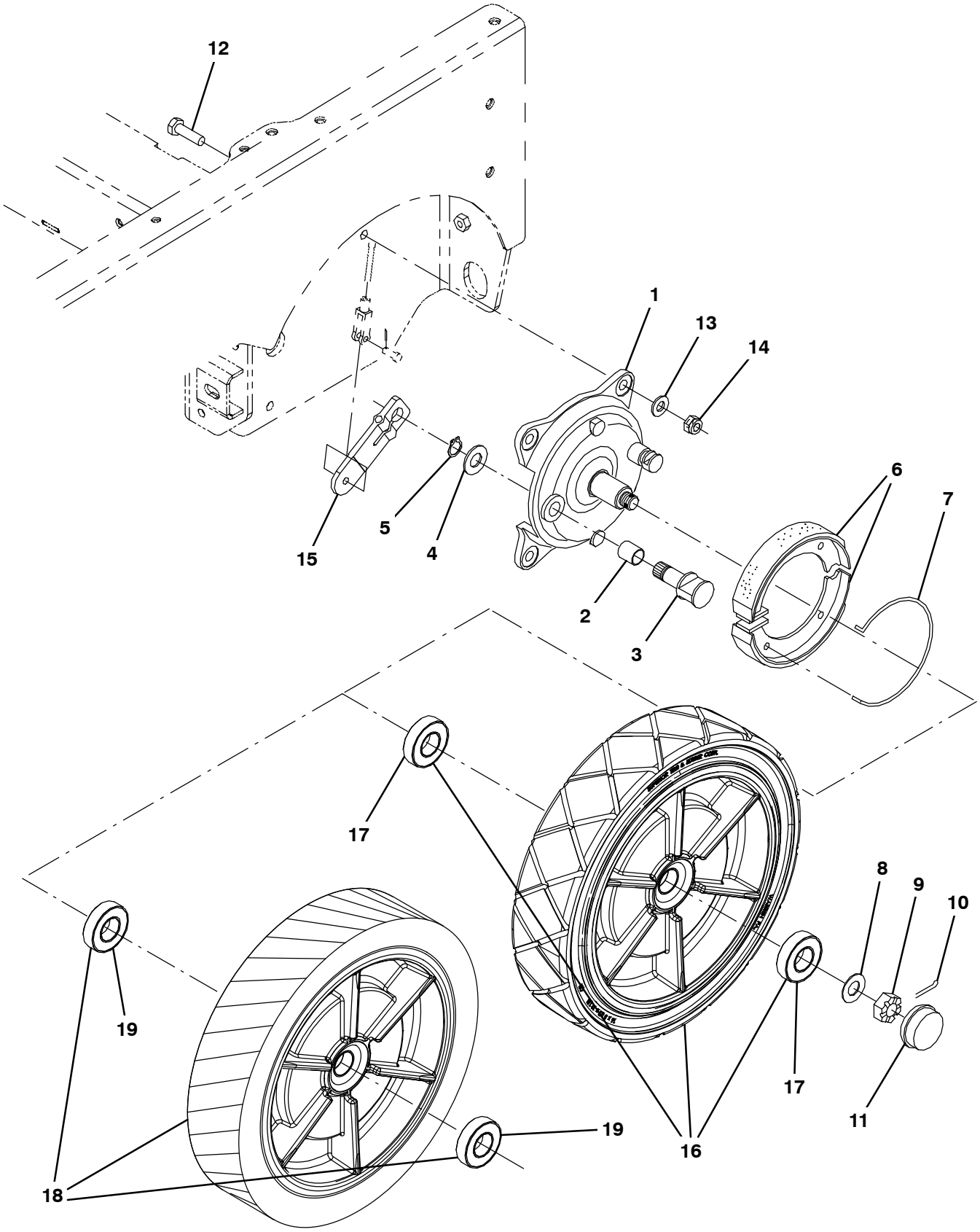

354427

Fig. 24 – Wheel Group, Rear

	Ref.	Part No.	Serial Number	Description	Qty.
▽		360023	(000000–)	Brake Assy, Drum, Mech, 07.0d 1.2w	2
▲	1	360270	(000000–)	Plate, Backing, Brake	1
▲	2	360271	(000000–)	Bushing, Sleeve, 0.78b 0.86d 0.93l, Bnz	1
▲	3	360272	(000000–)	Cam, Plt, Brake [Nickel]	1
▲	4	360273	(000000–)	Washer, Flat, M21.0b X 37d X 3	1
▲	5	360274	(000000–)	Retainer, Ring, Brake	1
▲	6	360275	(000000–)	Shoe, Brake, 180 X 30mm	2
▲	7	360276	(000000–)	Spring, Wir, 0.25d, Return, Brake	1
	8	49145	(000000–)	Washer, Flat, 0.76b 1.50d .06, Ss	2
	9	86659	(000000–)	Nut, Hex, Sltd, .75–16	2
	10	08171	(000000–)	Pin, Cotter, .156 X 2.00	2
	11	54390	(000000–)	Cap, Hub, Dust 2.57d 0.77l	2
	12	06969	(000000–)	Screw, Hex, M12 X 1.75 X 40, 8.8	8
	13	32486	(000000–)	Washer, Flat, 0.50 Sae	8
	14	08711	(000000–)	Nut, Hex, Lock, M12 X 1.75,Nl	8
	15	360802	(000000–)	Arm, Lever, Brake, 4.1 [Knott]	2
▽	16	1059671	(000000–)	Tire, Idler, Scrbr, Blk, 16.0X3.5	2
▲	17	360074	(000000–)	Bearing, Ball, 1.18b 2.44d 0.63w	2
▽	16	1059347	(000000–)	Tire, Idler, Scrbr, Non–Skid, 16.0x3.5 (Optional)	2
▲	17	360074	(000000–)	Bearing, Ball, 1.18b 2.44d 0.63w	2
▽	18	1061974	(000000–)	Tire, Idler, Scrbr, Pu, Grey, 16.0X3.5 (Optional Polyurethane)	2
▲	19	360074	(000000–)	Bearing, Ball, 1.18b 2.44d 0.63w	2

Fig. 25 – Brake Pedal Linkage Group

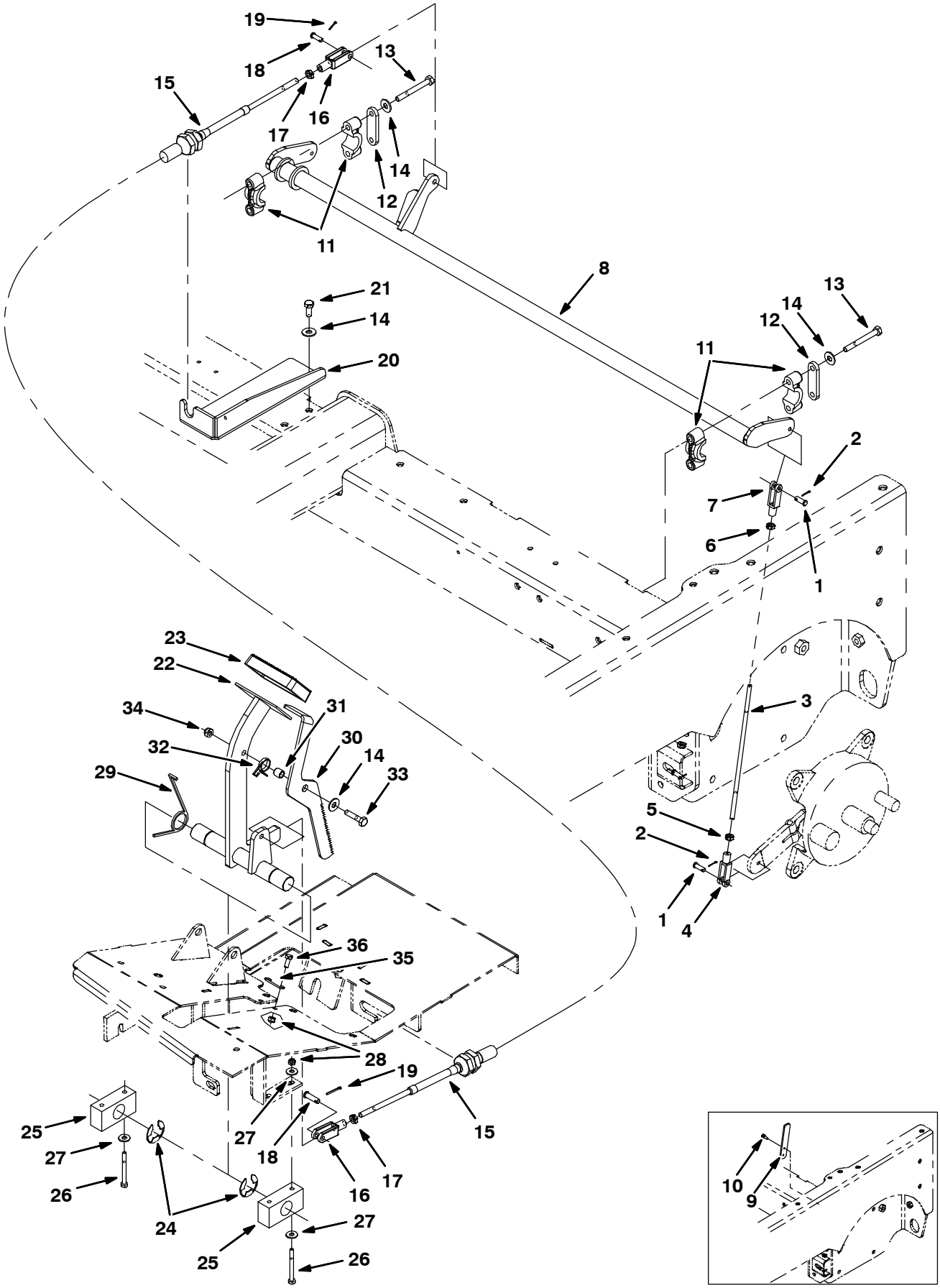

354428

Fig. 25 – Brake Pedal Linkage Group

Ref.	Part No.	Serial Number	Description	Qty.
1	14605	(000000–)	Pin, Clevis, 0.25d X 0.75l	4
2	08170	(000000–)	Pin, Cotter, .062 X 0.50	4
3	364347	(000000–)	Rod	2
4	14595–1	(000000–)	Clevis, Adj, 0.25 Pin, 0.25–28 Rh, Pl	2
5	364948	(000000–)	Nut, Hex, Std, .25–28, Lh	2
6	01714	(000000–)	Nut, Hex, Std, .25–28	2
7	364864	(000000–)	Clevis, Adj, 0.25pin, 0.25–28left Pl	2
8	1022031	(000000–)	Shaft Wldt, Brake	1
9	1026025	(000000–xxxxxx)	Plate, Stop, Brake	2
10	361339	(000000–xxxxxx)	Screw, Hex, M6 X 1.0 X 16, Fmg	4
11	381502	(000000–)	Bearing, Split, 1.00b	4
12	382224	(000000–)	Plate, Sppt	2
13	39279	(000000–)	Screw, Hex, M8 X 1.25 X 70, 8.8	4
14	32491	(000000–)	Washer, Flat, 0.31, Std	7
15	1025495	(000000–)	Cable, Push / Pull, 063.0l 4.0, .31–24	1
16	58311	(000000–)	Clevis, Adj, 0.31pin, 0.31–24	2
17	20170	(000000–)	Nut, Hex, Jam, .31–24	2
18	69582	(000000–)	Pin, Clevis, 0.31d X 1.00l	2
19	08179	(000000–)	Pin, Cotter, .094 X 1.00	2
20	1022736	(000000–)	Bracket, Mtg, Cable	1
21	16931	(000000–)	Screw, Hex, M8 X 1.25 X 20, 8.8	2
22	1022243	(000000–)	Shaft Wldt, Pedal, Brake	1
23	51109	(000000–)	Pad, Pedal, Brake, 3.96l 2.36w 0.75	1
24	23788	(000000–)	Ring, Retaining, Ext, 0.98d, [E–Ring]	2
25	86751	(000000–)	Bearing, Pillowblock, 1.02b [Solid Pye]	2
26	06548	(000000–)	Screw, Hex, M6 X 1.0 X 60, 8.8	4
27	32490	(000000–)	Washer, Flat, 0.25 Std	8
28	08708	(000000–)	Nut, Hex, Lock, M6 X 1.0, Nl	6
29	54607	(000000–)	Spring, Tors, 1.13id .12wir 02.3coil Rh	2
30	1025487	(000000–)	Pedal, Brake, Lock	1
31	46563	(000000–)	Bushing, Sleeve, 0.37b 0.50d 0.50l, Oib	1
32	59009	(000000–)	Spring, Tors, 0.75id .06wir 02.8coil	1
33	06955	(000000–)	Screw, Hex, M8 X 1.25 X 35, 8.8	1
34	08709	(000000–)	Nut, Hex, Lock, M8 X 1.25, Nl	1
35	71367	(000000–)	Spring, Wir, 0.08d, Brake, Parking	1
36	06942	(000000–)	Screw, Hex, M6 X 1.0 X 16, 8.8	2

Fig. 26 – Directional Pedal and Linkage Group, Diesel

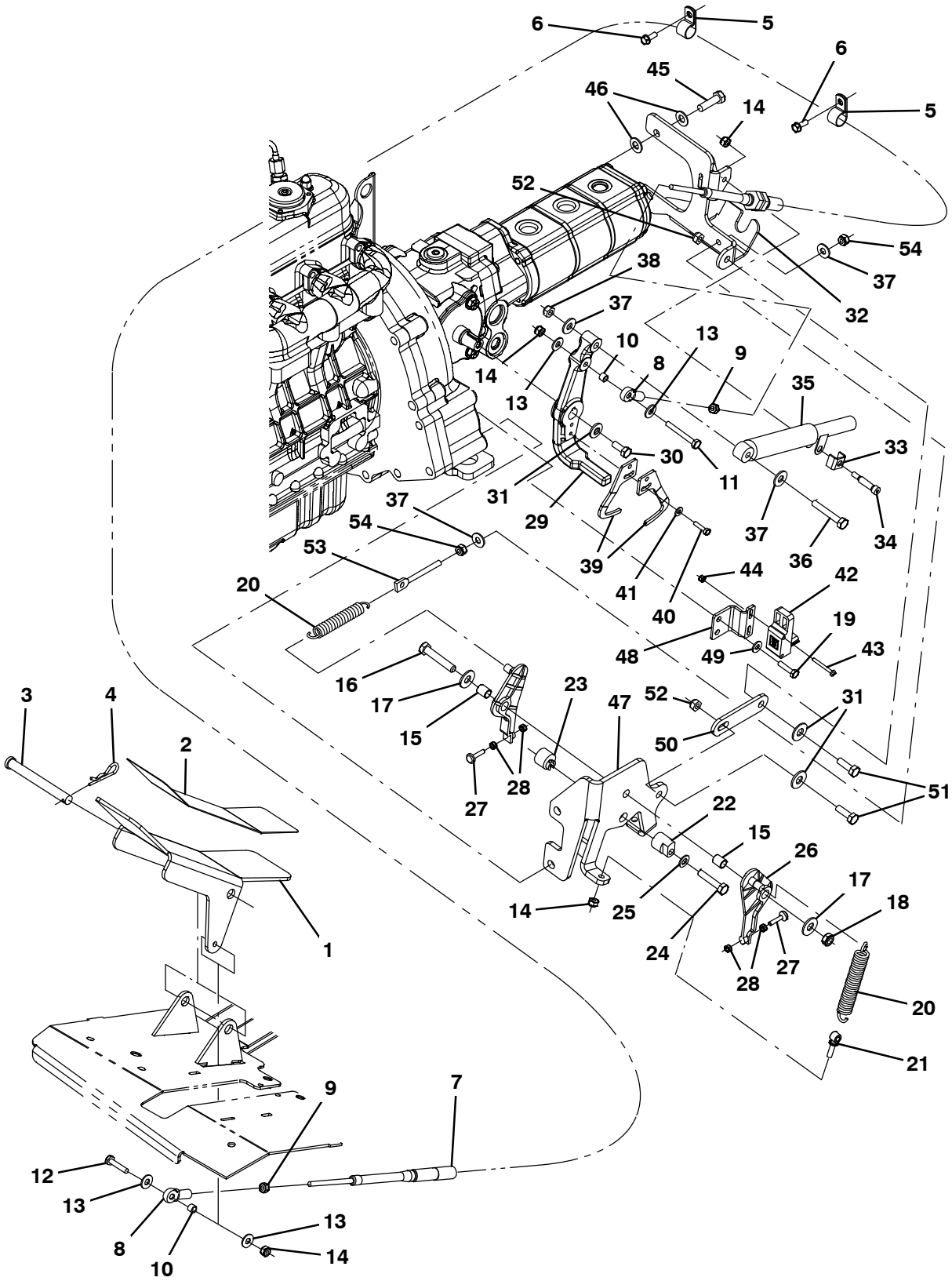

Ref.	Part No.	Serial Number	Description	Qty.
1	1025140	(000000–)	Pedal, Propel	1
2	58819	(000000–)	Tread, Non–Skid, 03.0w 11.6l	1
3	59668	(000000–)	Pin, Clevis, 0.50 D X 4.50l	1

354493

Fig. 26 – Directional Pedal and Linkage Group, Diesel

Ref.	Part No.	Serial Number	Description	Qty.
4	08182	(000000–)	Pin, Cotter, .125 X 1.00	1
5	67767	(000000–)	Clamp, Cable, Stl, 0.69d X 0.62w, 1h	2
6	361339	(000000–)	Screw, Hex, M6 X 1.0 X 16, Fmg	2
7	1022345	(000000–)	Cable, Push / Pull, 098.0l .25–28/.25–28	1
8	68866	(000000–)	Rod–End, .25–28rh Fem 0.25b [Teflon]	2
9	01714	(000000–)	Nut, Hex, Std, .25–28	2
10	65441	(000000–)	Tube, 00.38d 00.26b 00.3l Stl Plt	2
11	41399	(000000–)	Screw, Hex, .25–20 X 2.25, Ss	1
12	42180	(000000–)	Screw, Hex, .25–20 X 1.75, Ss	1
13	32490	(000000–)	Washer, Flat, 0.25 Std	5
14	41169	(000000–)	Nut, Hex, Lock, .25–20, Nl, Ss	4
15	63234	(000000–)	Tube, 00.50d 00.38b 00.6l Stl	2
16	42467	(000000–)	Screw, Hex, .38–16 X 2.00, Ss	1
17	32492	(000000–)	Washer, Flat, 0.38 Std	2
18	36643	(000000–)	Nut, Hex, Lock, .38–16, Nl, Thin	1
19	21197	(000000–)	Screw, Hex, .38–16 X 1.00, 5	2
20	11842	(000000–)	Spring, Extn, 0.75od X 0.12wir, 4.3l	2
21	48079	(000000–)	Bolt, Eye, .25–20 X 1.40 X .25 Eye	1
22	53947	(000000–)	Cam, Centering, Pintle	1
23	54655	(000000–)	Cam, Centering, Pintle	1
24	74440	(000000–)	Screw, Hex, M8 X 1.25 X 40, Ss, Nl	1
25	39349	(000000–)	Washer, Flat, 0.31 Sae	1
26	53953	(000000–)	Arm, Cntrl, Pintle, Centering	2
27	54205	(000000–)	Bumper, Rbr, 0.5d 0.16t M5 X 08	2
28	50335	(000000–)	Nut, Hex, Std, M5 X 0.8, 8	4
29	1027233	(000000–)	Arm, Pintle	1
30	83879	(000000–)	Screw, Hex, .31–24 X 0.75, Nl	1
31	41186	(000000–)	Washer, Belleville, .31	3
32	1027313	(000000–)	Bracket Wldt, Propel, Pintle	1
33	84170	(000000–)	Bracket, Retainer, Safety	1
34	16213	(000000–)	Bolt, Shld, .31d X 1.00, .25–20	1
35	73411	(000000–)	Shock Absorber, 2.3 Strk	1
36	39278	(000000–)	Screw, Hex, M8 X 1.25 X 50, 8.8	1
37	32491	(000000–)	Washer, Flat, 0.31 Std	2
38	08709	(000000–)	Nut, Hex, Lock, M8 X 1.25, Nl	1
39	1022787	(000000–)	Arm [Positioning]	2
40	09252	(000000–)	Screw, Hex, M5 X 0.8 X 20, 8.8	2
41	01683	(000000–)	Washer, Flat, #10 Ss	2
42	1022779	(000000–)	Sensor, Spd / Dir, 6–30vdc	1
43	09198	(000000–)	Screw, Pan, M4 X 0.7 X 35, Ss	2
44	33932	(000000–)	Nut, Hex, Lock, M4 X 0.7, Nl, Ss	2
45	21198	(000000–)	Screw, Hex, .38–16 X 1.25, G5	2
46	32485	(000000–)	Washer, Flat, 0.38 Sae	4
47	1027692	(000000–)	Bracket, Propel, Dsl	1
48	1027742	(000000–)	Bracket, Mtg, Sensor	1
49	32483	(000000–)	Washer, Flat, 0.25, Sae	2
50	1032399	(000000–)	Strap, Sppt	1
51	09010	(000000–)	Screw, Hex, M8 X 1.25 X 25, Ss	2
52	08713	(000000–)	Nut, Hex, Lock, M8 X 1.25, Nl, Ss	2
53	386088	(000000–)	Bolt, Eye, M8X1.25, 2.75L	1
54	07786	(000000–)	Nut, Hex, Std, M8 X 1.25, Ss	2

Fig. 27 – Hopper Lift Arms Group

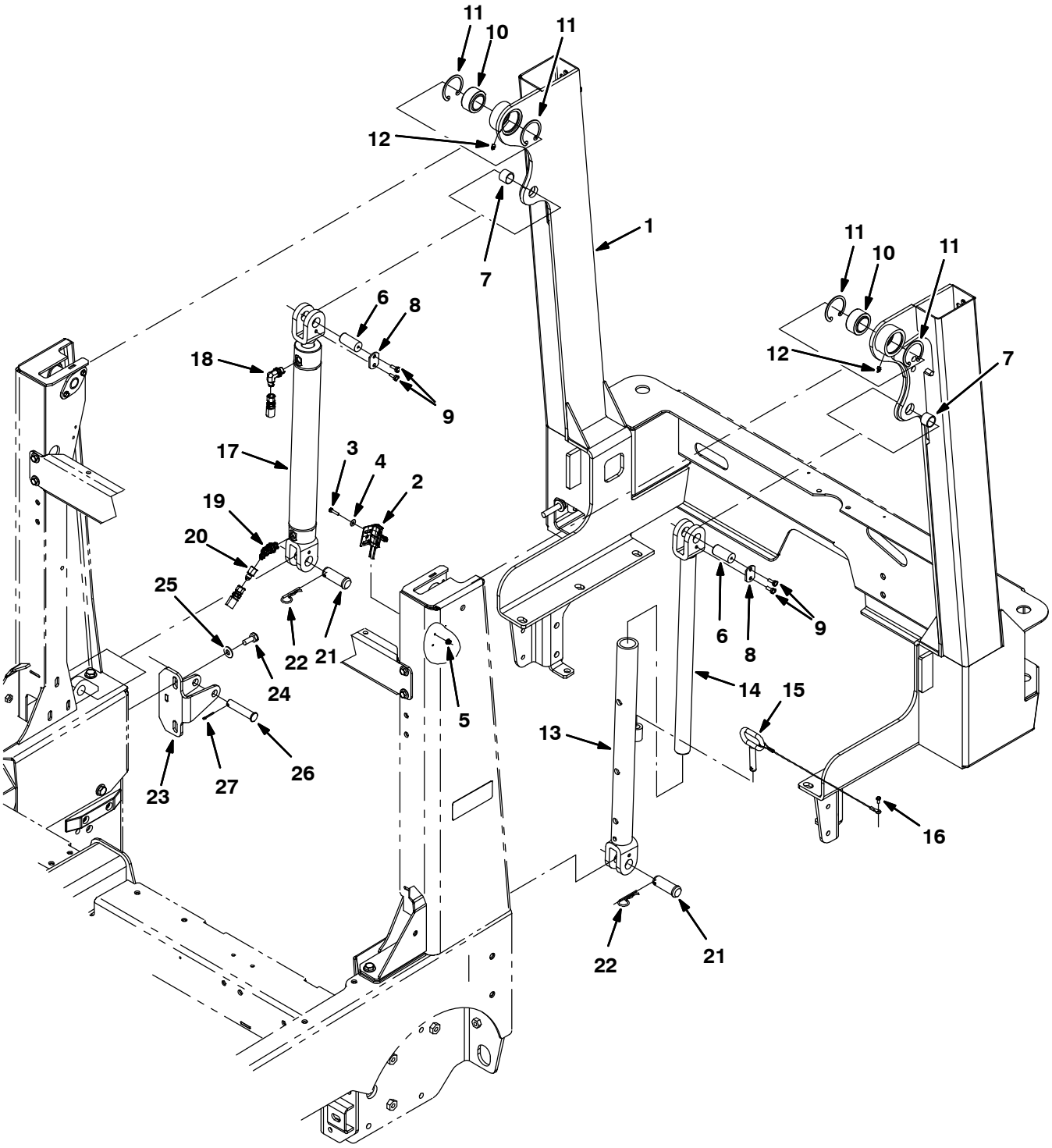

354430

Fig. 27 – Hopper Lift Arms Group

Ref.	Part No.	Serial Number	Description	Qty.
1	1018241	(000000–004292)	Frame Wldt, Lift, Hppr	1
1	1069933	(004293–)	Frame Wldt, Lift, Hppr	1
2	23211	(000000–)	Switch, Snap, 15a No, Rlr	1
3	09252	(000000–)	Screw, Hex, M5 X 0.8 X 20, 8.8	2
4	19066	(000000–)	Washer, Flat, #10	2
5	07789	(000000–)	Nut, Hex, Flng, M5 X 0.8	2
6	1018226	(000000–)	Pin, 0.87d 01.8l, 1/M6 X 1.0, 1cham,Stl	2
7	364587	(000000–)	Bushing, Sleeve, 0.88b 1.00d 0.75l, Bnz	2
8	72897	(000000–)	Plate, Pin, Clevis, Upper	2
9	1040467	(000000–)	Screw, Hex, M6 X 1.0 X 20, 9.8, Sems	4
10	42120–1	(000000–)	Bearing, Self Align, 1.25b 2.00d	2
11	59542	(000000–)	Ring, Retaining, Int, 2.00d	4
12	07259	(000000–)	Fitting, Grease, Str Pm04 .47l	2
13	1018260	(000000–)	Tube Wldt, Arm, Safety	1
14	1018262	(000000–)	Rod Wldt, Arm, Safety	1
15	1018266	(000000–)	Pin, Arm, Safety	1
16	16944	(000000–)	Screw, Hex, M4 X 0.7 X 10, Fmg	1
17	1029646	(000000–)	Cylinder, Hyd, 2.0B 24.1L 15.00Strk 3000	1
18	47638	(000000–)	Fitting, Hyd, E90, Jm04/Om06	1
19	393215	(000000–)	Fitting, Hyd, E45, Jm04/Om06	1
20	1025904	(000000–)	Fitting, Hyd, Rst, Jf04/Jm04, .028	1
21	1018227	(000000–)	Pin, Clevis, 0.88d X 2.25l	2
22	02942	(000000–)	Pin, Cotter, Hair, 0.62d .120 Wir	2
23	1018275	(000000–)	Plate Wldt, Arm, Stop	1
24	09028	(000000–)	Screw, Hex, M10 X 1.5 X 25, Ss	2
25	01686	(000000–)	Washer, Flat, 0.44b 1.00d .08, Ss	2
26	1018276	(000000–)	Pin, Clevis, 0.62d X 2.91l	1
27	08179	(000000–)	Pin, Cotter, .094 X 1.00	1

Fig. 28 – Hopper and Debris Screen Group

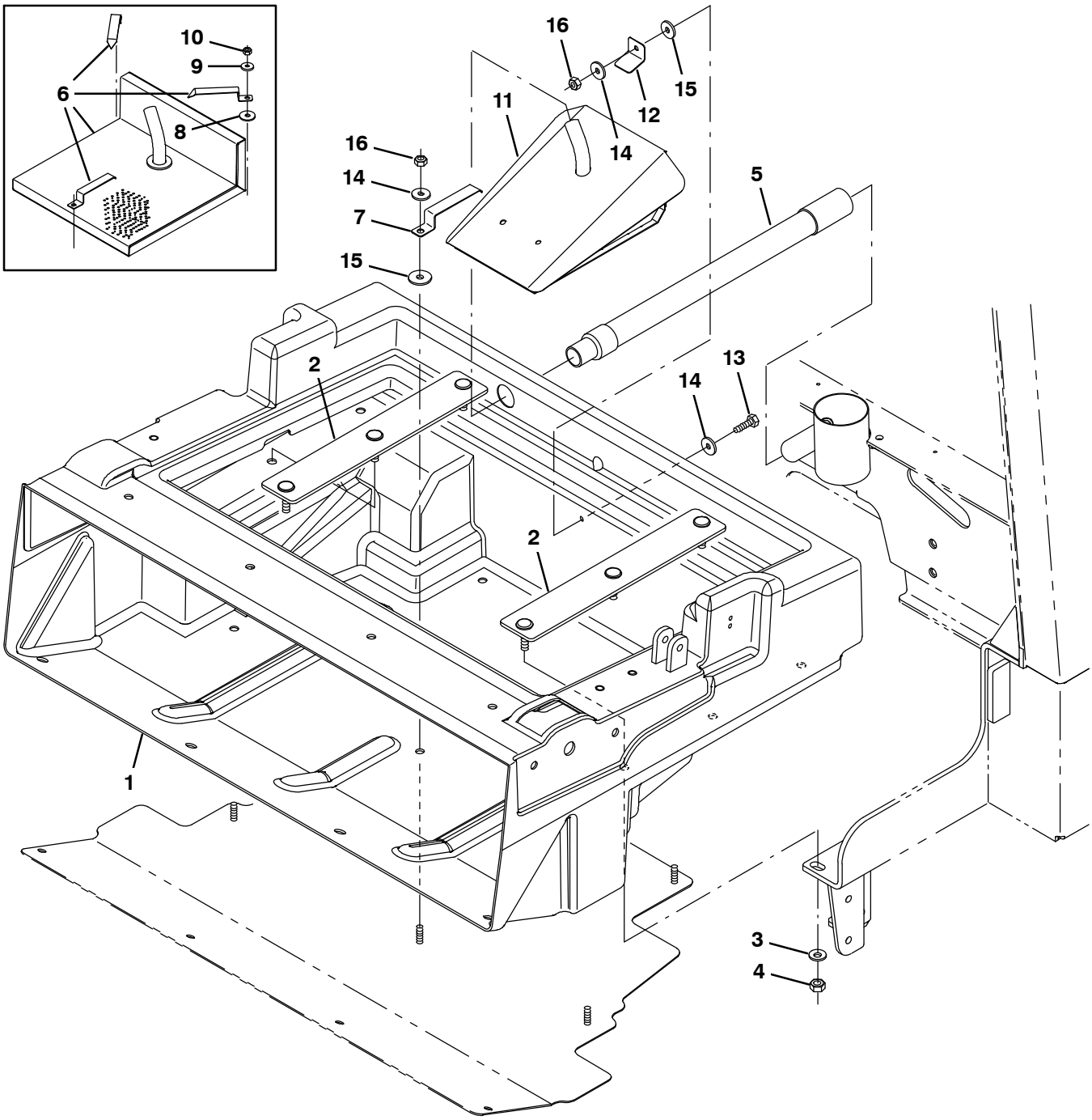

354431

Fig. 28 – Hopper and Debris Screen Group

Ref.	Part No.	Serial Number	Description	Qty.
1	1018300	(000000–)	Hopper, Debris, Rm–Hg, Trimmed	1
2	1018272	(000000–)	Bar, Mtg, Hppr	2
3	763042	(000000–)	Washer, Flat, Belleville, M10	6
4	08714	(000000–)	Nut, Hex, Lock, M10 X 1.5, Nl, Ss	6
5	1018239	(000000–)	Hose Assy, W/1cuff, 1.0d 09l 1.0/	1
6	9003774	(000000–002280)	Screen Kit, Hppr, Replmt [M20]	1
7	1044323	(002281–)	Spring, Flat, Retainer, Angled Screen	1
8	222268	(000000–002280)	Washer, Flat, 0.38b 1.25d .12, Neo	3
9	1017218	(000000–002280)	Washer, Flat, 0.32b 1.00d .12, Ss	3
10	08713	(000000–002280)	Nut, Hex, Lock, M8 X 1.25, Nl, Ss	3
11	1039163	(002281–)	Screen Wldt, Hppr	1
12	1039215	(002281–)	Angle, Retainer	1
13	09010	(002281–)	Screw, Hex, M8 X 1.25 X 25, Ss	1
14	1017218	(002281–)	Washer, Flat, 0.32b 1.00d .12, Ss	3
15	222268	(002281–)	Washer, Flat, 0.38b 1.25d .12, Neo	2
16	08713	(002281–)	Nut, Hex, Lock, M8 X 1.25, Nl, Ss	2

Fig. 29 – Hopper Cover and Dust Filter Group

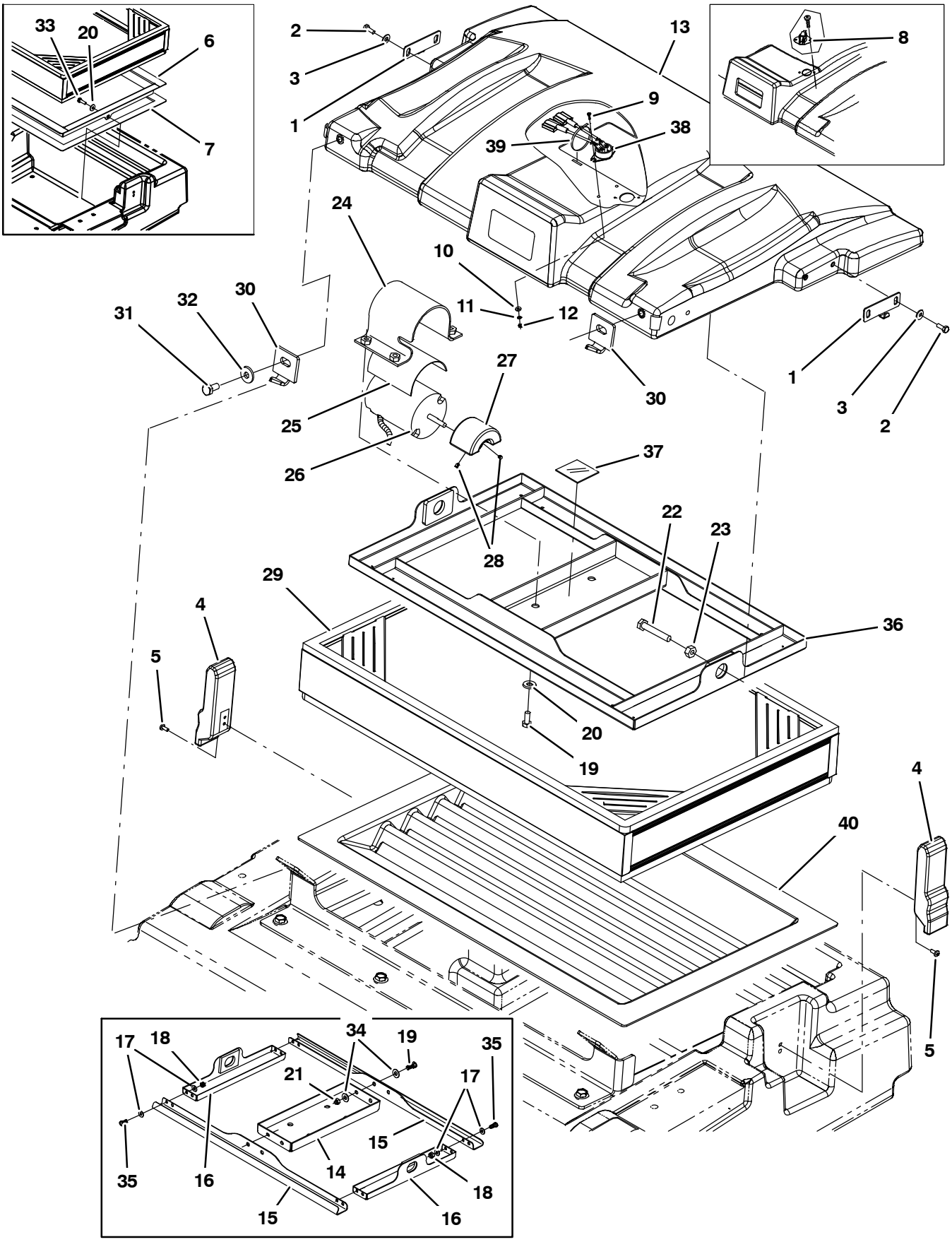

354432

Fig. 29 – Hopper Cover and Dust Filter Group

Ref.	Part No.	Serial Number	Description	Qty.
1	1041984	(000000–)	Bracket, Cover, Hppr	2
2	15678	(000000–)	Screw, Hex, M6 X 1.0 X 16, Ss	4
3	01684	(000000–)	Washer, Flat, 0.25, Ss	4
4	360824	(000000–)	Latch	2
5	09200	(000000–)	Screw, Pan, M5 X 0.8 X 12, Ss	4
6	1033591	(000000–002048)	Tray Wldt, Perma–filter (Replaced By none)	1
7	1015220	(000000–002048)	Seal, Afmkt, Ure, Adh, 0.38, 0.75w 08ft (Replaced By none)	1
8	9003444	(000000–002040)	Sensor Kit, Repair [Thermo–Sentry, M20]	1
9	06922	(000000–)	Screw, Pan, M3 X 0.5 X 20, 4.8	2
10	19064	(000000–)	Washer, Flat, #06	2
11	32975	(000000–)	Washer, Lock, Int, #06	2
12	01754	(000000–)	Nut, Hex, Std, M3 X 0.5, 8	2
13	1041006	(000000–)	Cover, Hppr	1
14	1018203	(000000–001356)	Plate, Shakr	1
15	360952	(000000–001356)	Plate, Shakr, Bar	2
16	1017944	(000000–001356)	Plate Wldt, Shakr, Side	2
17	32483	(000000–001356)	Washer, Flat, 0.25 Sae	16
18	08712	(000000–001356)	Nut, Hex, Lock, M6 X 1.0, Ss, Nl	8
19	09740	(000000–)	Screw, Hex, M8 X 1.25 X 20, Ss	8
20	01685	(000000–)	Washer, Flat, 0.31, Ss	6
21	08713	(000000–)	Nut, Hex, Lock, M8 X 1.25, Nl, Ss	4
22	06957	(000000–002040)	Screw, Hex, M8 X 1.25 X 60, 8.8	2
22	06963	(002041–)	Screw, Hex, M10 X 1.50 X 60, 8.8	2
23	39311	(000000–002040)	Nut, Hex, Std, M8 X 1.25	2
23	39312	(002041–)	Nut, Hex, Std, M10 X 1.50	2
24	1037671	(000000–)	Strap, Mtg, Motor, .124.00W	1
25	36658	(000000–)	Strip, Rbr, 0.06 04.00w 05.0l Neo/60	1
26	1041920	(000000–003408)	Motor, Ele [12vdc, Shaker]	1
26	1059542	(003409–)	Motor, Ele 12Vdc, Shakr	1
27	1049242	(000000–003408)	Weight, Eccentric	1
27	1053320	(003409–)	Weight, Eccentric	1
28	20634	(000000–)	Screw, Set, #10–24 X 0.25, Nl	2
29	1048295AM	(000000–)	Filter, Panl, Syn, 4.2 X 20.0 X 30.0	1
30	1018207	(000000–)	Bar, Mtg, Hppr Cover	2
31	09291	(000000–)	Screw, Hex, M10 X 1.5 X 20, Ss	2
32	1014563	(000000–)	Washer, Flat, 0.40b 1.12d .12, Ss	2
33	39277	(000000–)	Screw, Hex, M8 X 1.25 X 25, 8.8	2
34	01685	(000000–001356)	Washer, Flat, 0.31, Ss	8
35	15678	(000000–001356)	Screw, Hex, M6 X 1.0 X 16, Ss	8
36	1037235	(001357–)	Shaker Wldt	1
37	36661	(001357–)	Strip, Rbr, 0.06 01.00W 04.0L	1
38	1036611	(002041–003478)	Switch, Temp [160F]	1
38	1056298	(003479–)	Switch, Temp, Sealed, Nc	1
39	763116	(002041–)	Tie, Cable, Nyl, 15.3L . W 4.5 Max D	1
40	1037947	(002140–)	Tray, Perma–Filter	1

Fig. 30 – Hopper Bumper Group

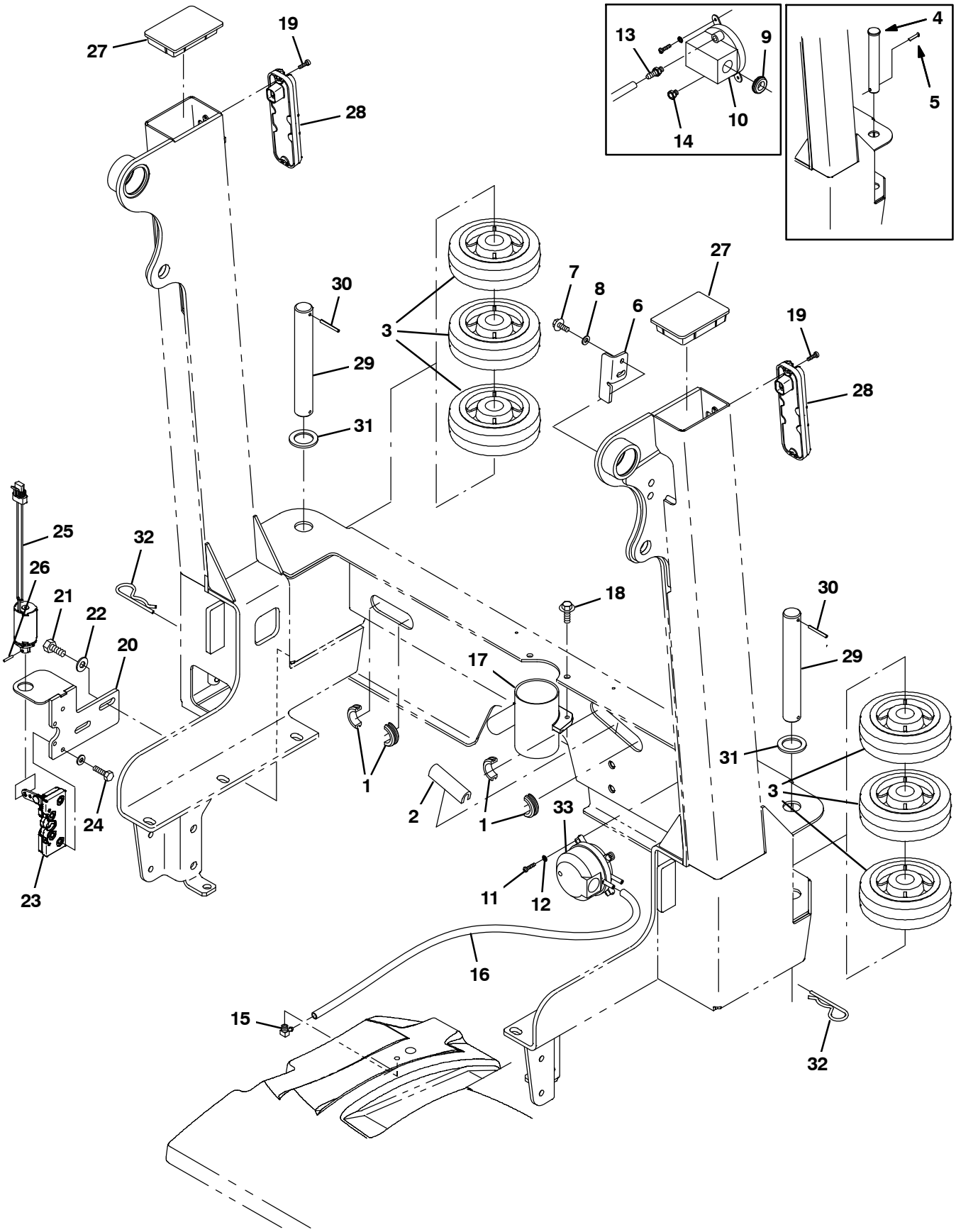

354433

Fig. 30 – Hopper Bumper Group

Ref.	Part No.	Serial Number	Description	Qty.
1	10632–1	(000000–xxxxxx)	Grommet, Rbr, 1.06id, F/1.4h, .19 Matl	2
1	10632–13	(xxxxxx–)	Grommet, Rbr, 1.50id, F/1.8h, .19 Matl	2
2	50646	(000000–)	Molding, Trim, Pvc,.18–.31 07.5l	1
3	1021047	(000000–)	Wheel, 06.0d 2.00w 1.19b, Gray Rbr	6
4	9006334	(000000–003062)	Pin Kit, Wheel, Ci [M20/T20/M30]	2
5	08171	(000000–003062)	Pin, Cotter, .156 X 2.00	2
6	1018240	(000000–)	Bracket, Mtg, Switch	1
7	361339	(000000–)	Screw, Hex, M6 X 1.0 X 16, Fmg	2
8	32483	(000000–)	Washer, Flat, 0.25 Sae	2
9	10632–4	(000000–003259)	Grommet, Rbr, 0.62id, F/0.9h, .06 Matl	1
10	39924	(000000–003259)	Switch, Press, Spdt 0008psi	1
11	12323	(000000–)	Screw, Pan, M4 X 0.7 X 20, Ss	2
12	02938	(000000–)	Washer, Lock, Int, #08, Ss	2
13	40607	(000000–003259)	Fitting, Brs, Str, Bm03/Pm02	1
14	82739	(000000–003259)	Fitting, Brs, Breather [02mp]	1
15	32183	(000000–)	Fitting, Brs, E90, Pm02/Bm03	1
16	1031575	(000000–)	Hose, Afmkt, Vacuum, 0.16id, 03ft	1
17	1036240	(000000–)	Tube, Vacuum	1
18	1037346	(000000–)	Screw, Hex, M8 X 1.25 X 25, 9.8, Sems	2
19	06928	(000000–)	Screw, Pan, M4 X 0.7 X 20, 4.8	4
20	1018280	(000000–)	Plate Wldt, Mtg, Solenoid	1
21	09028	(000000–xxxxxx)	Screw, Hex, M10 X 1.5 X 25, Ss	2
21	12309	(xxxxxx–)	Screw, Hex, M12 X 1.75 X 30, Ss	2
22	32492	(000000–xxxxxx)	Washer, Flat, 0.38 Std	2
22	32486	(xxxxxx–)	Washer, Flat, 0.50, Sae	2
23	21623	(000000–)	Latch	1
24	06944	(000000–)	Screw, Hex, M6 X 1.0 X 25, 8.8	4
25	1018274	(000000–)	Solenoid, Pull, 12vdc, Damper	1
26	20021	(000000–)	Pin, Roll, .125 D X 0.75l, .125/.129	1
27	1018293	(000000–)	Cap, Arm, Lift	2
28	1018208	(000000–)	Light, Tail, 12vdc	2
29	1053838	(003063–)	Pin, 30mmd X 215mml	2
30	23146	(003063–)	Pin, Roll, .187d X 1.62l, .187/.192	2
31	1062566	(003063–)	Washer, Flat, 1.26B 1.88D .13, Stl, Pl	2
32	34411	(003063–)	Pin, Cotter, Hair, 1.00d .178 Wir	2
33	1052885	(003260–)	Switch, Press, Adj [4–16 In Wtr]	1

Fig. 31 – Hopper Door Group (000000–003061)

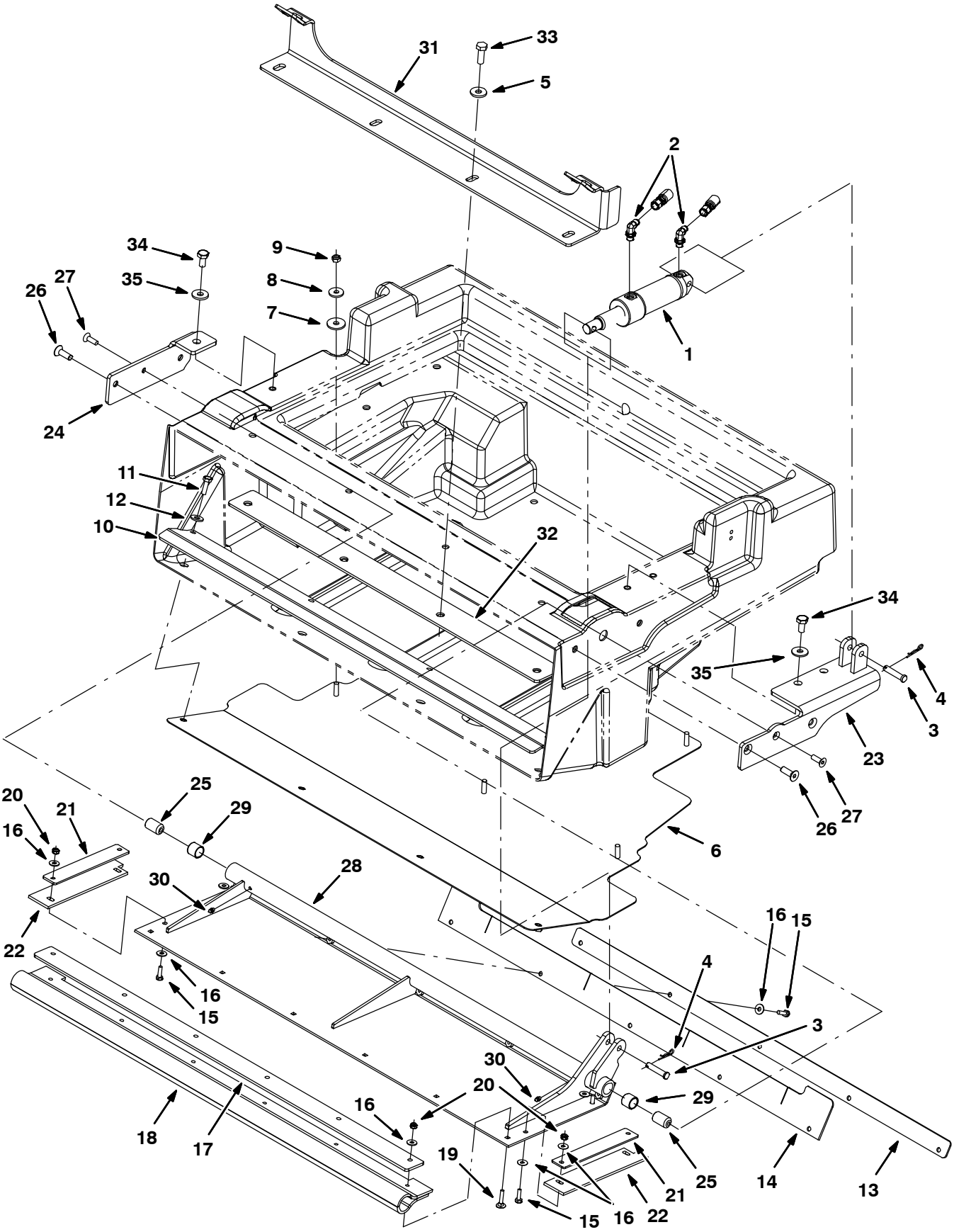

354434

Fig. 31 – Hopper Door Group (000000–003061)

Ref.	Part No.	Serial Number	Description	Qty.
1	1038115	(000000–003061)	Cylinder, Hyd, 1.5b 07.8l 02.75strk 2500	1
2	77097	(000000–003061)	Fitting, Hyd, E90, Jm04/Om04	2
3	17461	(000000–003061)	Pin, Clevis, 0.37d X 1.75l	2
4	08179	(000000–003061)	Pin, Cotter, .094 X 1.00	2
5	1014563	(000000–003061)	Washer, Flat, 0.40b 1.12d .12, Ss	4
6	1018237	(000000–003061)	Plate, Bottom, Hppr	1
7	222268	(000000–003061)	Washer, Flat, 0.38b 1.25d .12, Neo	2
8	1017218	(000000–003061)	Washer, Flat, 0.32b 1.00d .12, Ss	2
9	08713	(000000–003061)	Nut, Hex, Lock, M8 X 1.25, Nl, Ss	2
10	1018236	(000000–003061)	Bracket, Lip, Hppr	1
11	09010	(000000–003061)	Screw, Hex, M8 X 1.25 X 25, Ss	4
12	01685	(000000–003061)	Washer, Flat, 0.31, Ss	4
13	1018244	(000000–003061)	Strap, Door, Dump	1
14	1018245	(000000–003061)	Seal, Door, Dump	1
15	08716	(000000–003061)	Screw, Hex, M6 X 1.0 X 20, Ss	9
16	01684	(000000–003061)	Washer, Flat, 0.25, Ss	19
17	1018196	(000000–003061)	Plate, Retainer, Door, Dump	1
18	1018197	(000000–003061)	Seal, Door, Dump	1
19	379791	(000000–003061)	Bolt, Carriage, M06 X 1.0 X 30	6
20	08712	(000000–003061)	Nut, Hex, Lock, M6 X 1.0, Ss, Nl	10
21	1018194	(000000–003061)	Strap, Door, Dump, Side	2
22	1018199	(000000–003061)	Seal, Door, Dump, Side	2
23	1018210	(000000–003061)	Bracket Wldt, Pivot, Hppr Door, Lh	1
24	1018202	(000000–003061)	Bracket, Pivot, Hppr Door, Rh	1
25	1018193	(000000–003061)	Bushing, Pivot, Door	2
26	395825	(000000–003061)	Screw, Flt, M10 X 1.5 X 30, Ss 18–8	4
27	07810	(000000–003061)	Screw, Flt, M8 X 1.25 X 25, 10.9	2
28	1016463	(000000–003061)	Door Wldt, Hppr	1
29	64379	(000000–003061)	Bushing, Sleeve, 0.75b 0.88d 0.75l, Tef	2
30	07259	(000000–003061)	Fitting, Grease, Str Pm04 .47l	2
31	1044993	(000000–003061)	Bracket, Cover, Hopper	1
32	1018253	(000000–003061)	Bracket, Cover	1
33	12317	(000000–003061)	Screw, Hex, M10 X 1.5 X 30, Ss	4
34	09291	(000000–003061)	Screw, Hex, M10 X 1.5 X 20, Ss	3
35	1014563	(000000–003061)	Washer, Flat, 0.40b 1.12d .12, Ss	3

Fig. 32 – Hopper Door Group (003062–)

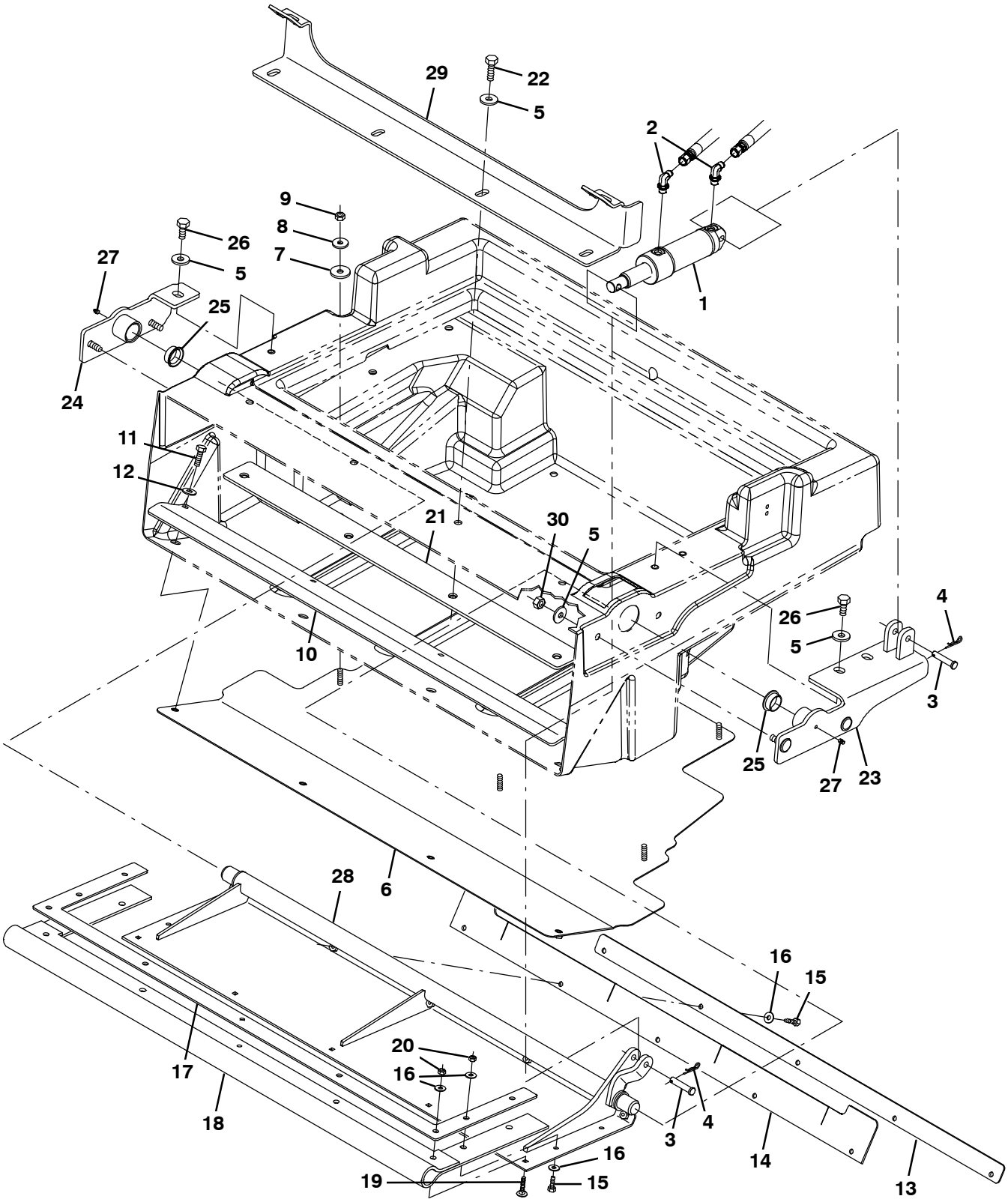

354434

Fig. 32 – Hopper Door Group (003062–)

Ref.	Part No.	Serial Number	Description	Qty.
1	1038115	(003062–)	Cylinder, Hyd, 1.5b 07.8l 02.75strk 2500	1
2	77097	(003062–)	Fitting, Hyd, E90, Jm04/Om04	2
3	17461	(003062–)	Pin, Clevis, 0.37d X 1.75l	2
4	08179	(003062–)	Pin, Cotter, .094 X 1.00	2
5	1014563	(003062–)	Washer, Flat, 0.40b 1.12d .12, Ss	11
6	1018237	(003062–)	Plate, Bottom, Hppr	1
7	222268	(003062–)	Washer, Flat, 0.38b 1.25d .12, Neo	2
8	1017218	(003062–)	Washer, Flat, 0.32b 1.00d .12, Ss	2
9	08713	(003062–)	Nut, Hex, Lock, M8 X 1.25, Nl, Ss	2
10	1018236	(003062–)	Bracket, Lip, Hppr	1
11	09010	(003062–)	Screw, Hex, M8 X 1.25 X 25, Ss	4
12	01685	(003062–)	Washer, Flat, 0.31, Ss	4
13	1039155	(003062–)	Strap, Door, Dump	1
14	1018245	(003062–)	Seal, Door, Dump	1
15	08716	(003062–)	Screw, Hex, M6 X 1.0 X 20, Ss	9
16	01684	(003062–)	Washer, Flat, 0.25, Ss	14
17	1039149	(003062–)	Plate, Retainer, Door, Dump	1
18	1039157	(003062–)	Seal, Door, Dump	1
19	379791	(003062–)	Bolt, Carriage, M06 X 1.0 X 30	5
20	08712	(003062–)	Nut, Hex, Lock, M6 X 1.0, Ss, Nl	9
21	1018253	(003062–)	Bracket, Cover	1
22	12317	(003062–)	Screw, Hex, M10 X 1.5 X 30, Ss	4
23	1038123	(003062–)	Bracket Wldt, Pivot, Hppr Door, Lh	1
24	1038134	(003062–)	Bracket Wldt, Pivot, Hppr, Rh	1
25	367313	(003062–)	Bushing, Flng, 1.00b 1.13d 0.50l	2
26	09291	(003062–)	Screw, Hex, M10 X 1.5 X 20, Ss	3
27	07259	(003062–)	Fitting, Grease, Str Pm04 .47l	2
28	1039124	(003062–)	Door Wldt, Hppr	1
29	1044993	(003062–)	Bracket, Cover, Hopper	1
30	08714	(003062–)	Nut, Hex, Lock, M10 X 1.5, Nl, Ss	4

Fig. 33 – Cylindrical Scrub Brush Drive Group, Left Side

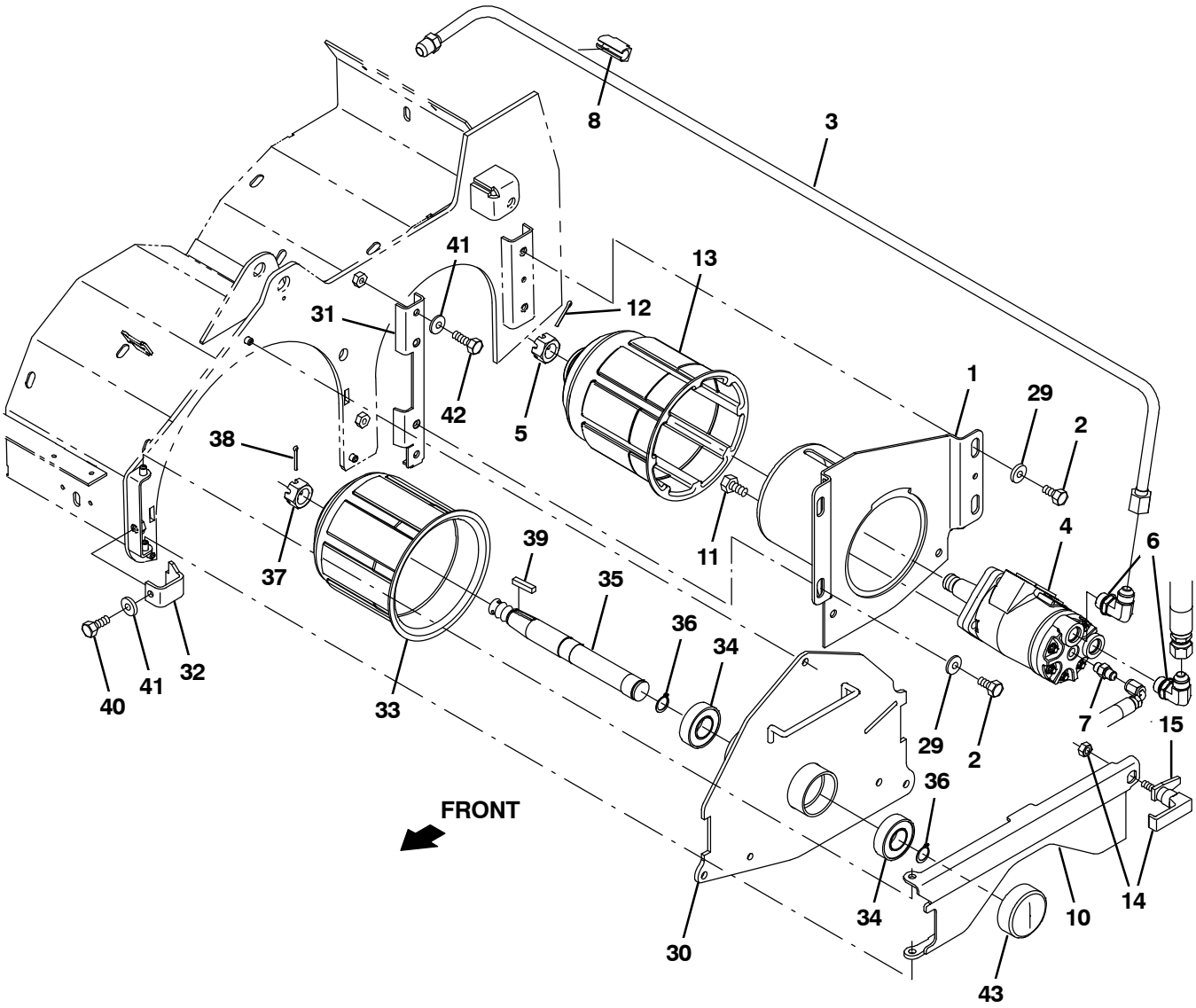

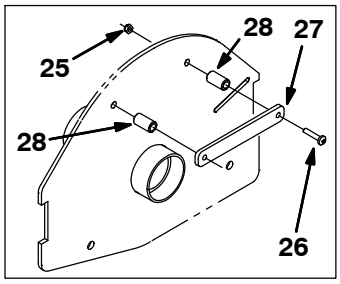

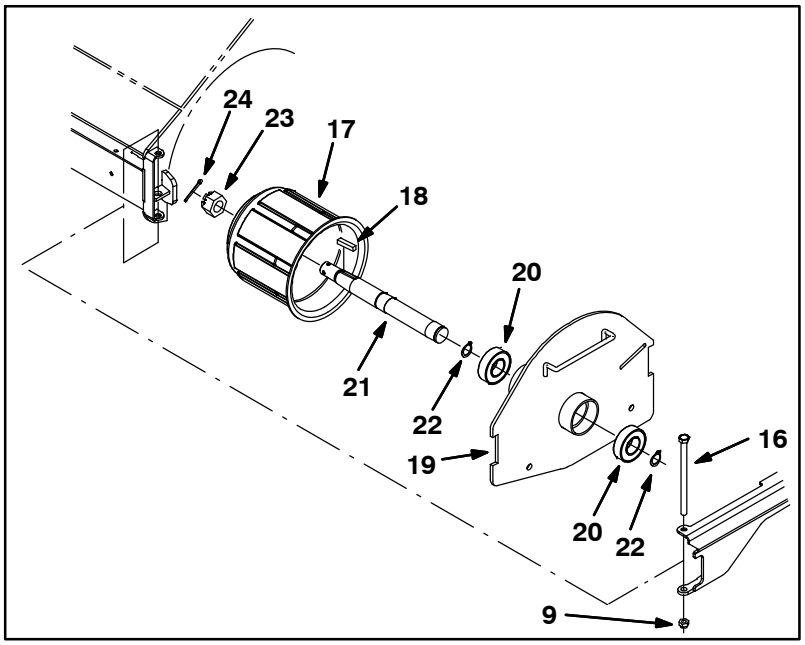

354435

Fig. 33 – Cylindrical Scrub Brush Drive Group, Left Side

	Ref.	Part No.	Serial Number	Description	Qty.
	1	1021019	(000000–)	Housing Wldt, Brush, Drive	1
	2	15675	(000000–)	Screw, Hex, M8 X 1.25 X 16, Ss	4
	3	1023617	(000000–)	Tube, Hyd, 08 Jf08/Jm08	1
	4	71729	(000000–004190)	Motor, Hyd, Gear, Int 04.5 Bi–Dir 1500 (See Breakdowns)	1
▽	4	1068811	(004191–)	Motor, Hyd, Gear, Int 04.5 Bi–Dir 1500	1
▲	5	39527	(000000–)	Nut, Hex, Sltd, .75–16	1
	6	44868	(000000–)	Fitting, Hyd, E90, Jm08/Om08	2
	7	55586	(000000–)	Fitting, Hyd, Str, Jm04/Om04	1
	8	1026080	(000000–)	Clamp, Hyd, 0.50d	1
	9	08713	(000000–004185)	Nut, Hex, Lock, M8 X 1.25, Nl, Ss	1
	10	1029964	(000000–)	Door Wldt, Brush	1
	11	01762	(000000–)	Screw, Hex, .38–16 X 0.75, Nl	4
	12	08175	(000000–)	Pin, Cotter, .125 X 1.25	1
	13	87631	(000000–004190)	Plug Wldt, Drive, Brush, Sweep	1
	13	1057643	(004191–)	Plug Wldt, Drive, Brush, Sweep	1
	14	65695	(000000–)	Latch	1
	15	1026352	(000000–)	Pawl, Str	1
	16	70563	(000000–004185)	Screw, Hex, M8 X 1.25 X 130, 8.8	1
▽		9006398	(000000–004185)	Idler Assy, Brush, Replmt [M20/T20, M30]	1
▲	17	25686	(000000–004185)	Plug Wldt, Drive, Brush	1
▲	18	00927	(000000–004185)	Key, Sq, 0.25 X 0.25, 1.25l	1
▲	19	1038258	(000000–004185)	Door Wldt, Brush, Idler	1
▲	20	13534	(000000–004185)	Bearing, Ball, 0.98b 2.05d 0.59w	2
▲	21	56078	(000000–004185)	Shaft, Brush, Idler	1
▲	22	09005	(000000–004185)	Ring, Retaining, Ext, 1.00d, Basic	2
▲	23	12295	(000000–004185)	Nut, Hex, Sltd, M20 X 2.5, 8	1
▲	24	08175	(000000–004185)	Pin, Cotter, .125 X 1.25	1
	25	09739	(000000–002167)	Nut, Hex, Lock, M5 X 0.8, Nl, Ss	2
	26	17185	(000000–002167)	Screw, Pan, M5 X 0.8 X 40, Ss	2
	27	1032743	(000000–002167)	Plate, Handle	1
	28	222496	(000000–002167)	Sleeve, P/M, 0.31b 0.50d 0.9l [430ss]	2
	29	32491	(000000–)	Washer, Flat, 0.31, Std	4
	30	1054857	(004186–)	Door Wldt, Brush, Idler	1
	31	1054575	(004186–)	Bracket, Sppt	1
	32	1054682	(004186–)	Bracket, Retainer, Lh	1
	33	25686	(004186–)	Plug Wldt, Drive, Brush	1
	34	13534	(004186–)	Bearing, Ball, 0.98b 2.05d 0.59w	2
	35	56078	(004186–)	Shaft, Brush, Idler	1
	36	09005	(004186–)	Ring, Retaining, Ext, 1.00d, Basic	2
	37	12295	(004186–)	Nut, Hex, Sltd, M20 X 2.5, 8	1
	38	08175	(004186–)	Pin, Cotter, .125 X 1.25	1
	39	00927	(004186–)	Key, Sq, 0.25 X 0.25, 1.25l	1
	40	09740	(004186–)	Screw, Hex, M8 X 1.25 X 20, Ss	1
	41	32491	(004186–)	Washer, Flat, 0.31, Std	3
	42	09010	(004186–)	Screw, Hex, M8 X 1.25 X 25, Ss	2
	43	1074807	(004186–)	Cap, Vinyl, 57mmid X 23mml	1

Fig. 34 – Cylindrical Scrub Brush Drive Group, Right Side

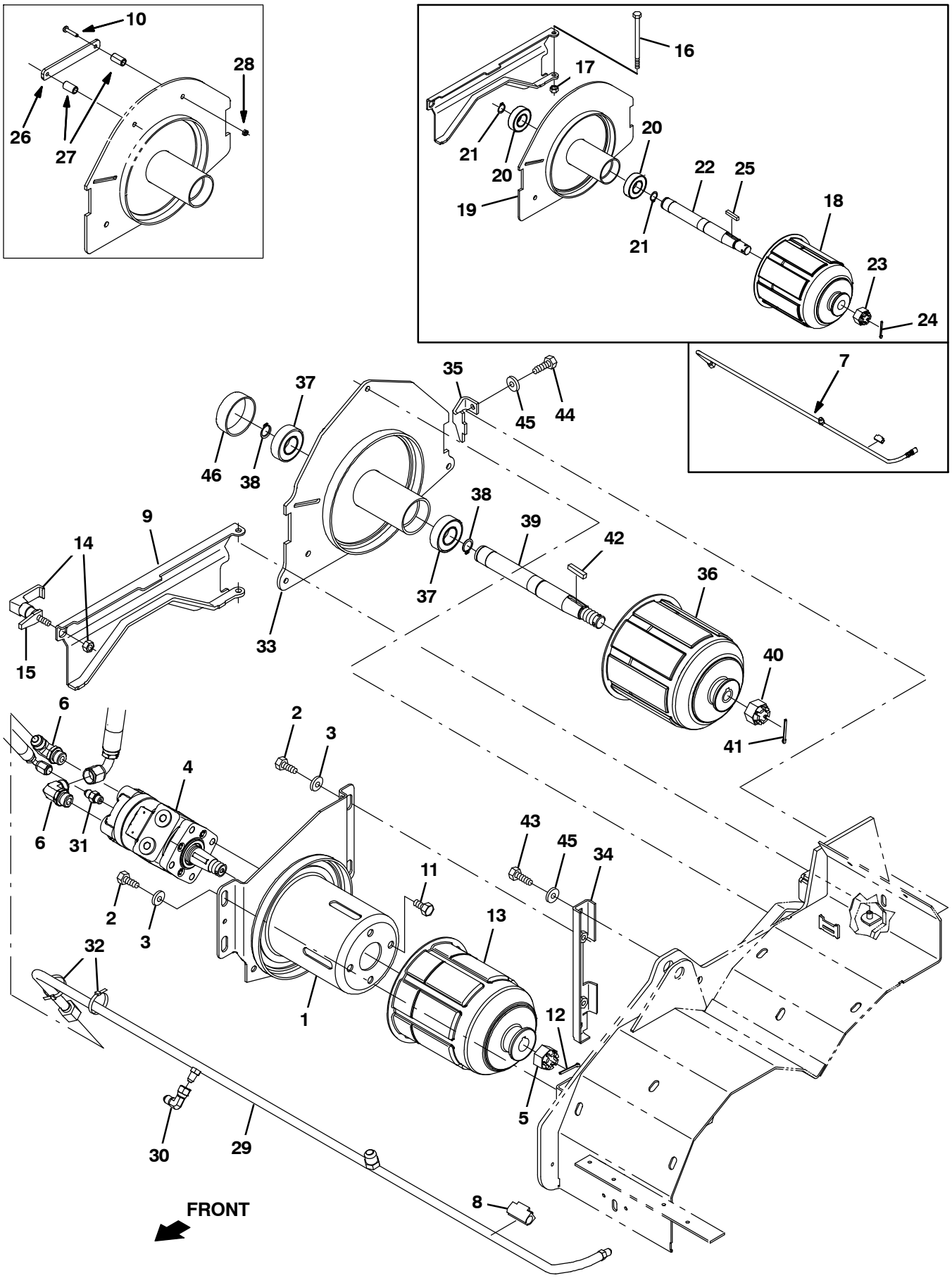

354436

Fig. 34 – Cylindrical Scrub Brush Drive Group, Right Side

	Ref.	Part No.	Serial Number	Description	Qty.
	1	1021019	(000000–)	Housing Wldt, Brush, Drive	1
	2	15675	(000000–)	Screw, Hex, M8 X 1.25 X 16, Ss	4
	3	32491	(000000–)	Washer, Flat, 0.31, Std	4
	4	71729	(000000–004190)	Motor, Hyd, Gear, Int 04.5 Bi–Dir 1500 (See Breakdowns)	1
▽	4	1068811	(004191–)	Motor, Hyd, Gear, Int 04.5 Bi–Dir 1500	1
▲	5	39527	(000000–)	Nut, Hex, Sltd, .75–16	1
	6	44868	(000000–)	Fitting, Hyd, E90, Jm08/Om08	2
	7	9006386	(000000–003056)	Tube Kit, Hyd, Case Drain [M20/T20]	1
	8	1026080	(000000–)	Clamp, Hyd, 0.50d	1
	9	1029964	(000000–)	Door Wldt, Brush	1
	10	17185	(000000–002167)	Screw, Pan, M5 X 0.8 X 40, Ss	2
	11	01762	(000000–)	Screw, Hex, .38–16 X 0.75, Nl	4
	12	08175	(000000–)	Pin, Cotter, .125 X 1.25	1
	13	87631	(000000–004190)	Plug Wldt, Drive, Brush, Sweep	1
	13	1057643	(004191–)	Plug Wldt, Drive, Brush, Sweep	1
	14	65695	(000000–)	Latch	1
	15	1026352	(000000–)	Pawl, Str	1
	16	70563	(000000–004185)	Screw, Hex, M8 X 1.25 X 130, 8.8	1
	17	08713	(000000–004185)	Nut, Hex, Lock, M8 X 1.25, Nl, Ss	1
▽		9006398	(000000–004185)	Idler Assy, Brush, Replmt [M20/T20, M30]	1
▲	18	25686	(000000–004185)	Plug Wldt, Drive, Brush	1
▲	19	1038258	(000000–004185)	Door Wldt, Brush, Idler	1
▲	20	13534	(000000–004185)	Bearing, Ball, 0.98b 2.05d 0.59w	2
▲	21	09005	(000000–004185)	Ring, Retaining, Ext, 1.00d, Basic	2
▲	22	56078	(000000–004185)	Shaft, Brush, Idler	1
▲	23	12295	(000000–004185)	Nut, Hex, Sltd, M20 X 2.5, 8	1
▲	24	08175	(000000–004185)	Pin, Cotter, .125 X 1.25	1
▲	25	00927	(000000–004185)	Key, Sq, 0.25 X 0.25, 1.25l	1
	26	1032743	(000000–002167)	Plate, Handle	1
	27	222496	(000000–002167)	Sleeve, P/M, 0.31b 0.50d 0.9l [430ss]	2
	28	09739	(000000–002167)	Nut, Hex, Lock, M5 X 0.8, Nl, Ss	2
	29	1055139	(003057–	Tube, Hyd, Brush Return, W/ Cd [M20/T20]	1
	30	39210	(003057–	Fitting, Hyd, E90, Jf04/Jm04	1
	31	55586	(003057–	Fitting, Hyd, Str, Jm04/Om04	1
	32	49266	(003057–	Tie, Cable, Nyl, 07.3l .19w 1.8 Max D	2
	33	1054857	(004186–)	Door Wldt, Brush, Idler	1
	34	1054575	(004186–)	Bracket, Sppt	1
	35	1054610	(004186–)	Bracket, Retainer, Rh	1
	36	25686	(004186–)	Plug Wldt, Drive, Brush	1
	37	13534	(004186–)	Bearing, Ball, 0.98b 2.05d 0.59w	2
	38	09005	(004186–)	Ring, Retaining, Ext, 1.00d, Basic	2
	39	56078	(004186–)	Shaft, Brush, Idler	1
	40	12295	(004186–)	Nut, Hex, Sltd, M20 X 2.5, 8	1
	41	08175	(004186–)	Pin, Cotter, .125 X 1.25	1
	42	00927	(004186–)	Key, Sq, 0.25 X 0.25, 1.25l	1
	43	09010	(004186–)	Screw, Hex, M8 X 1.25 X 25, Ss	2
	44	09740	(004186–)	Screw, Hex, M8 X 1.25 X 20, Ss	1
	45	32491	(004186–)	Washer, Flat, 0.31, Std	3
	46	1074807	(004186–)	Cap, Vinyl, 57mmid X 23mml	1

Fig. 35 – Cylindrical Brush Head Lift Group

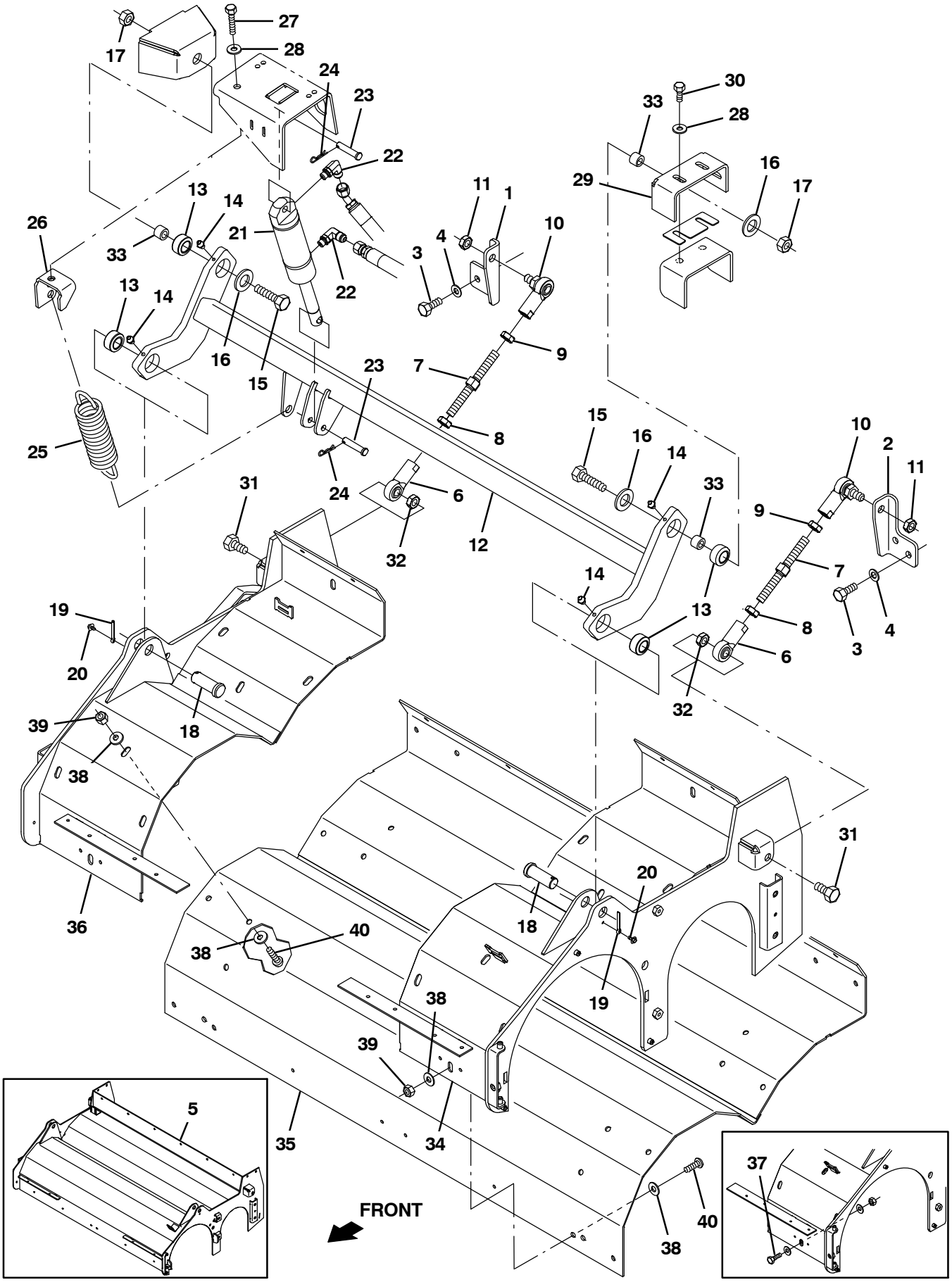

354437

Fig. 35 – Cylindrical Brush Head Lift Group

Ref.	Part No.	Serial Number	Description	Qty.
1	1030910	(000000–)	Bracket, Mtg, Scb Head, Rh	1
2	1030911	(000000–)	Bracket, Mtg, Scb Head, Lh	1
3	09028	(000000–)	Screw, Hex, M10 X 1.5 X 25, Ss	4
4	32485	(000000–)	Washer, Flat, 0.38 Sae	4
5	1020002	(000000–004185)	Housing Wldt, Swp, Scb	1
6	67555	(000000–)	Rod–End, .50–20rh Fem 0.50b	2
7	1014705	(000000–)	Rod, Thrd, 2 End, .50–20 04.9l, Rh / Lh	2
8	48985	(000000–)	Nut, Hex, Jam, .50–20	2
9	71369	(000000–)	Nut, Hex, Jam, .50–20, Lh	2
10	382099	(000000–)	Rod–End, .50–20lh Fem 0.50–20stud	2
11	51824	(000000–)	Nut, Hex, Lock, .50–20, Nl, Thin	2
12	1020003	(000000–)	Tube Wldt, Torque	1
13	42120	(000000–)	Bearing, Self Align, 0.75b 1.25d	4
14	07259	(000000–)	Fitting, Grease, Str Pm04 .47l	4
15	06969	(000000–)	Screw, Hex, M12 X 1.75 X 40, 8.8	2
16	41619	(000000–)	Washer, Flat, 0.56b 1.38d .11, Ss	2
17	09741	(000000–)	Nut, Hex, Lock, M12 X 1.75, Nl, Ss	2
18	04733–12	(000000–)	Pin, Clevis, 0.75d X 2.00l	2
19	08236	(000000–)	Pin, Cotter, .156 X 1.25	2
20	223198	(000000–)	Screw, Hex, M5 X 0.8 X 10, Fmg	2
21	1038137	(000000–)	Cylinder, Hyd, 1.5b 07.8l 02.80strk 2500	1
22	77098	(000000–)	Fitting, Hyd, E90, Jm06/Om04	2
23	17461	(000000–)	Pin, Clevis, 0.37d X 1.75l	2
24	86866	(000000–)	Pin, Cotter, Hair, 0.38d .072 Wir	2
25	1042686	(000000–)	Spring, Extn, 2.00od 0.25wir 07.5l	1
26	1027810	(000000–)	Bracket, Mtg, Spring	1
27	763090	(000000–)	Screw, Hex, M8 X 1.25 X 60, Fl	1
28	32491	(000000–)	Washer, Flat, 0.31, Std	4
29	1019146	(000000–)	Bracket, Mtg, Lift, Scb Head	1
30	09740	(000000–)	Screw, Hex, M8 X 1.25 X 20, Ss	3
31	39811	(000000–)	Screw, Hex, .50–13 X 1.50, 5	2
32	36644	(000000–)	Nut, Hex, Lock, .50–13, Nl, Thin	2
33	1025100	(000000–)	Sleeve, P/M, 0.47b 0.75d 0.5l [430ss]	3
34	1052342	(004186–)	Bracket Wldt, Brush Wrap, Lh	1
35	1069562	(004186–)	Plate Wldt, Wrap, Brush	1
36	1052124	(004186–)	Bracket Wldt, Brush Wrap Mtg, Rh	1
37	09740	(004186–00731)	Screw, Hex, M8 X 1.25 X 20, Ss	10
38	32491	(004186–)	Washer, Flat, 0.31, Std	20
39	08713	(004186–)	Nut, Hex, Lock, M8 X 1.25, Nl, Ss	10
40	223470	(007372–)	Screw, Btn, M8 X 1.25 X 25, Ss	10

Fig. 36 – Cylindrical Brush Head Skirt Group

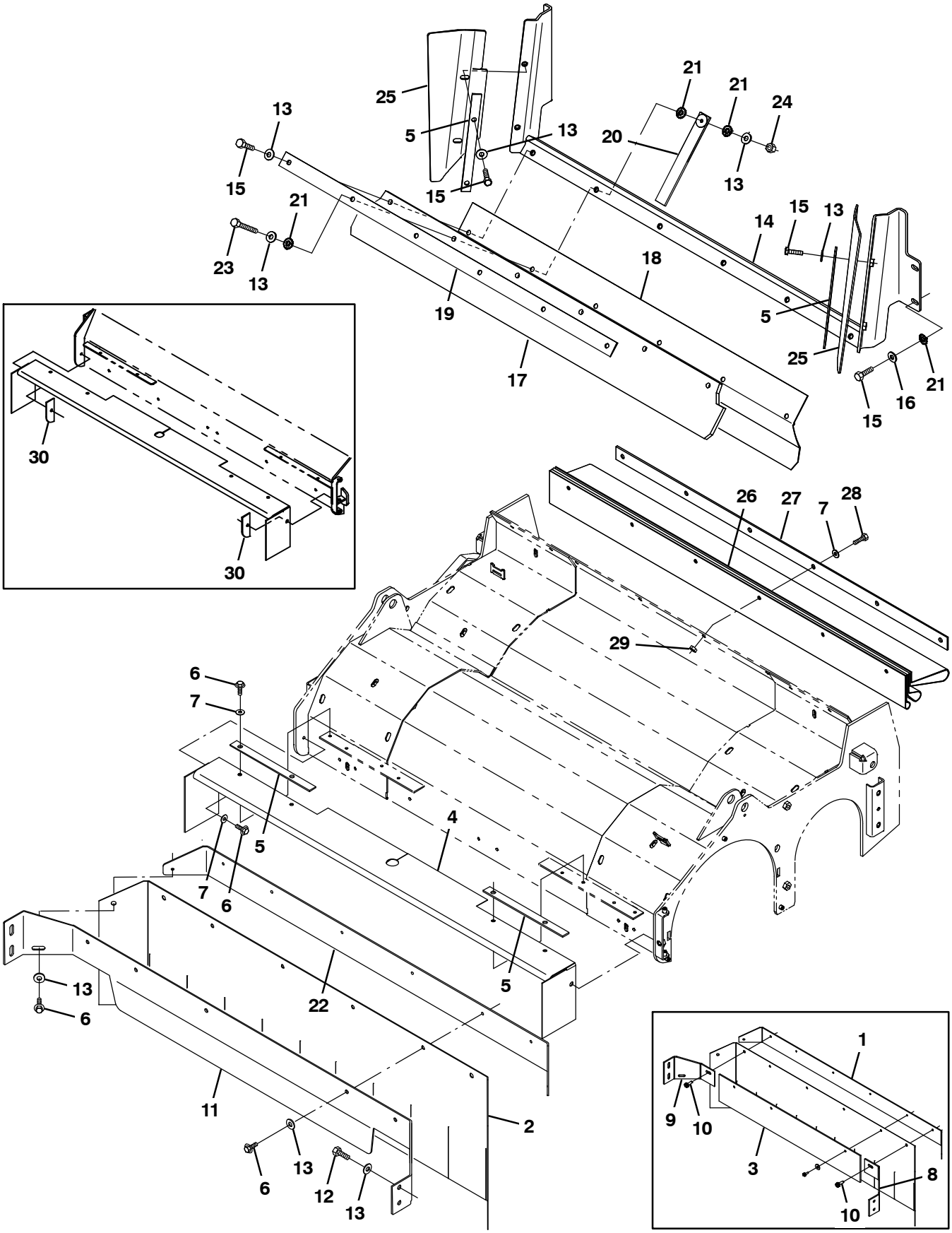

354438

Fig. 36 – Cylindrical Brush Head Skirt Group

Ref.	Part No.	Serial Number	Description	Qty.
1	1020208	(000000–002275)	Plate, Skirt, Front	1
2	1020166	(000000–)	Skirt, Neo, .06, 12.00w 45.88l, 07 Hole	1
3	1020207	(000000–002275)	Retainer, Skirt, Front	1
4	1022363	(000000–)	Skirt, Neo, .06, 07.63w 51.52l, 11 Hole	1
5	1022003	(000000–)	Retainer, Skirt	4
6	361339	(000000–)	Screw, Hex, M6 X 1.0 X 16, Fmg	13
7	01684	(000000–)	Washer, Flat, 0.25, Ss	12
8	1024570	(000000–002275)	Bracket, Mtg, Skirt	1
9	1020163	(000000–002275)	Bracket, Mtg, Skirt	1
10	76099	(000000–002275)	Screw, Hex, M8 X 1.25 X 25, Fmg	4
11	1039396	(002276–)	Bracket, Mtg, Skirt	1
12	09740	(000000–)	Screw, Hex, M8 X 1.25 X 20, Ss	4
13	01685	(000000–)	Washer, Flat, 0.31, Ss	22
14	1022179	(000000–)	Bracket Wldt, Flap, Recirculation	1
15	09010	(000000–)	Screw, Hex, M8 X 1.25 X 25, Ss	13
16	32491	(000000–)	Washer, Flat, 0.31, Std	4
17	1022007	(000000–)	Skirt, Rbr, .37, 04.50w 40.94l, 06 Hole	1
18	1022009	(000000–)	Skirt, Neo, .06, 06.38w 40.86l, 06 Hole	1
19	1020828	(000000–)	Strip, Flap, Recirculation	1
20	1028852	(000000–)	Strap, Static, Afmkt	1
21	41141	(000000–)	Washer, Lock, Int–Ext, 0.31	7
22	1040018	(002276–)	Plate, Skirt, Front	1
23	33401	(000000–)	Screw, Hex, M8 X 1.25 X 50, Ss, Fl	1
24	08713	(000000–)	Nut, Hex, Lock, M8 X 1.25, Nl, Ss	1
25	1022165	(000000–)	Skirt, Neo, .12, 05.39w 14.01l, 02 Sl	2
26	1026108	(000000–)	Skirt, Neo, .06, 26.99w 40.55l, 36 Hole	1
27	1020828	(000000–)	Strip, Flap, Recirculation	1
28	07805	(000000–)	Screw, Hex, M6 X 1.0 X 35, Ss	6
29	08712	(000000–)	Nut, Hex, Lock, M6 X 1.0, Ss, Nl	6
30	1022359	(000000–001284)	Plate, Mtg, Skirt, Scb Head	2

Fig. 37 – Squeegee Lift Group, Rear

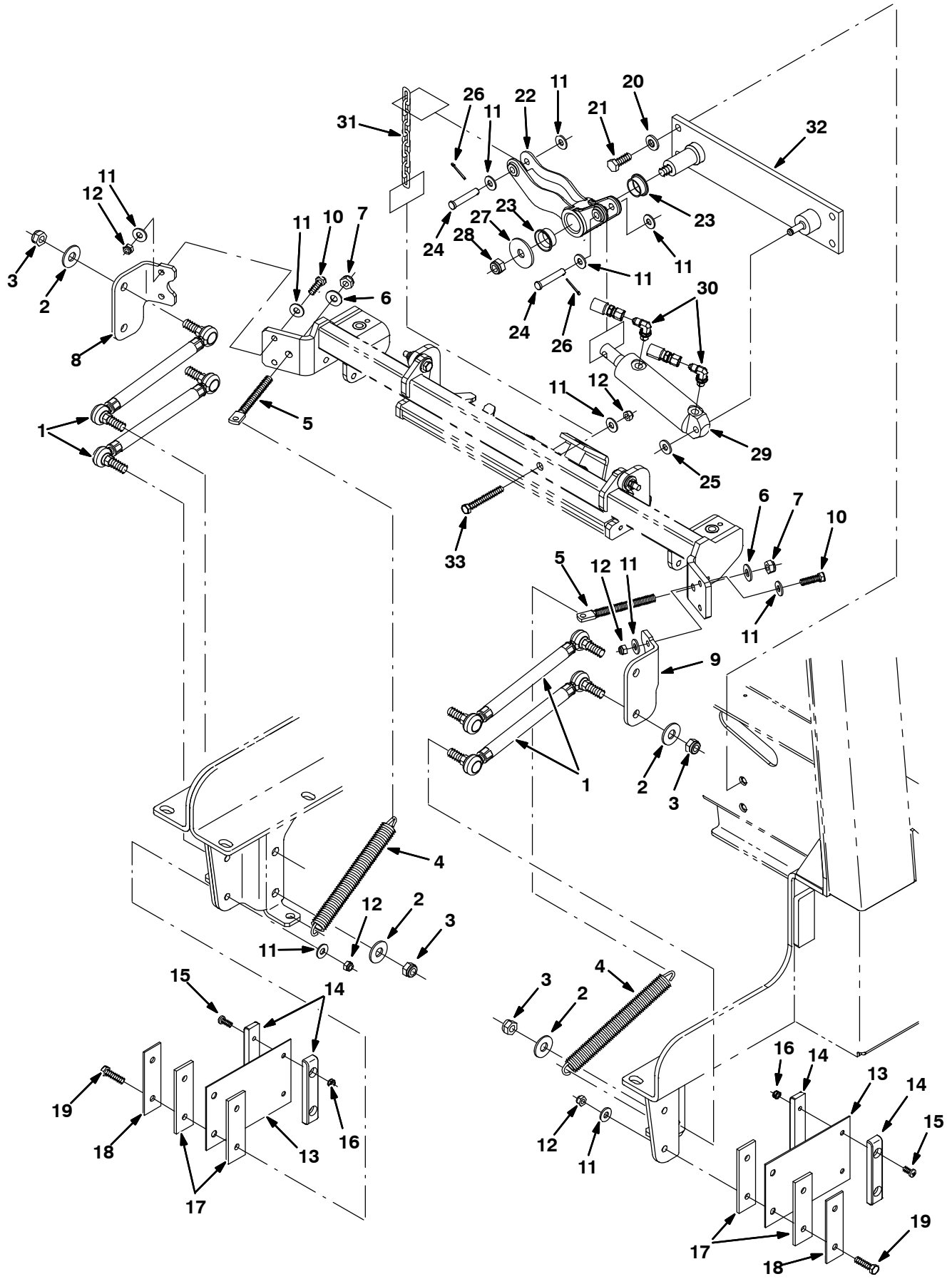

354439

Fig. 37 – Squeegee Lift Group, Rear

Ref.	Part No.	Serial Number	Description	Qty.
1	1026007	(000000–)	Link Assy, Rod–End, M12	4
2	41619	(000000–)	Washer, Flat, 0.56b 1.38d .11, Ss	8
3	09741	(000000–)	Nut, Hex, Lock, M12 X 1.75, Nl, Ss	8
4	46785–1	(000000–)	Spring, Extn, 0.88od X 0.14wir, 9.0l	2
5	386847	(000000–)	Bolt, Eye, M10 X 1.5 X 064mm, 7.10 Eye	2
6	01686	(000000–)	Washer, Flat, 0.44b 1.00d .08, Ss	2
7	08714	(000000–)	Nut, Hex, Lock, M10 X 1.5, Nl, Ss	2
8	1022372	(000000–)	Angle, Rh	1
9	1022442	(000000–)	Angle, Lh	1
10	09010	(000000–)	Screw, Hex, M8 X 1.25 X 25, Ss	4
11	01685	(000000–)	Washer, Flat, 0.31, Ss	15
12	08713	(000000–)	Nut, Hex, Lock, M8 X 1.25, Nl, Ss	9
13	71204	(000000–)	Spring, Flt, 0.08th, 4.50w X 07.0l	2
14	1024648	(000000–)	Block, Centering	4
15	367770	(000000–)	Screw, Pan, M6 X 1.0 X 16, Ss	4
16	08712	(000000–)	Nut, Hex, Lock, M6 X 1.0, Ss, Nl	4
17	1024641	(000000–)	Spacer, Pad, Rbr	4
18	1024703	(000000–)	Retainer, Spring	2
19	09023	(000000–)	Screw, Hex, M8 X 1.25 X 35, Ss, Fl	4
20	41187	(000000–)	Washer, Flat, Belleville, .38	4
21	12317	(000000–)	Screw, Hex, M10 X 1.5 X 30, Ss	4
22	1025680	(000000–)	Bellcrank, Lift, Sqge	1
23	367313	(000000–)	Bushing, Flng, 1.00b 1.13d 0.50l	2
24	29584	(000000–)	Pin, Clevis, 0.37d X 2.00l	2
25	23524–1	(000000–)	Ring, Retaining, Ext, 0.38d, [Selflock]	1
26	08179	(000000–)	Pin, Cotter, .094 X 1.00	2
27	04414	(000000–)	Washer, Flat, 0.53b 1.88d .12, Stl, Pl	1
28	09741	(000000–)	Nut, Hex, Lock, M12 X 1.75, Nl, Ss	1
29	1038137	(000000–)	Cylinder, Hyd, 1.5b 07.8l 02.80strk 2500	1
30	77097	(000000–)	Fitting, Hyd, E90, Jm04/Om04	2
31	1023779	(000000–)	Chain, Str, 4/0, 08 Link	1
32	1021609	(000000–)	Plate Wldt, Lift, Sqge	1
33	06957	(002102–)	Screw, Hex, M8 X 1.25 X 60, 8.8	1

Fig. 38 – Squeegee Group, Rear

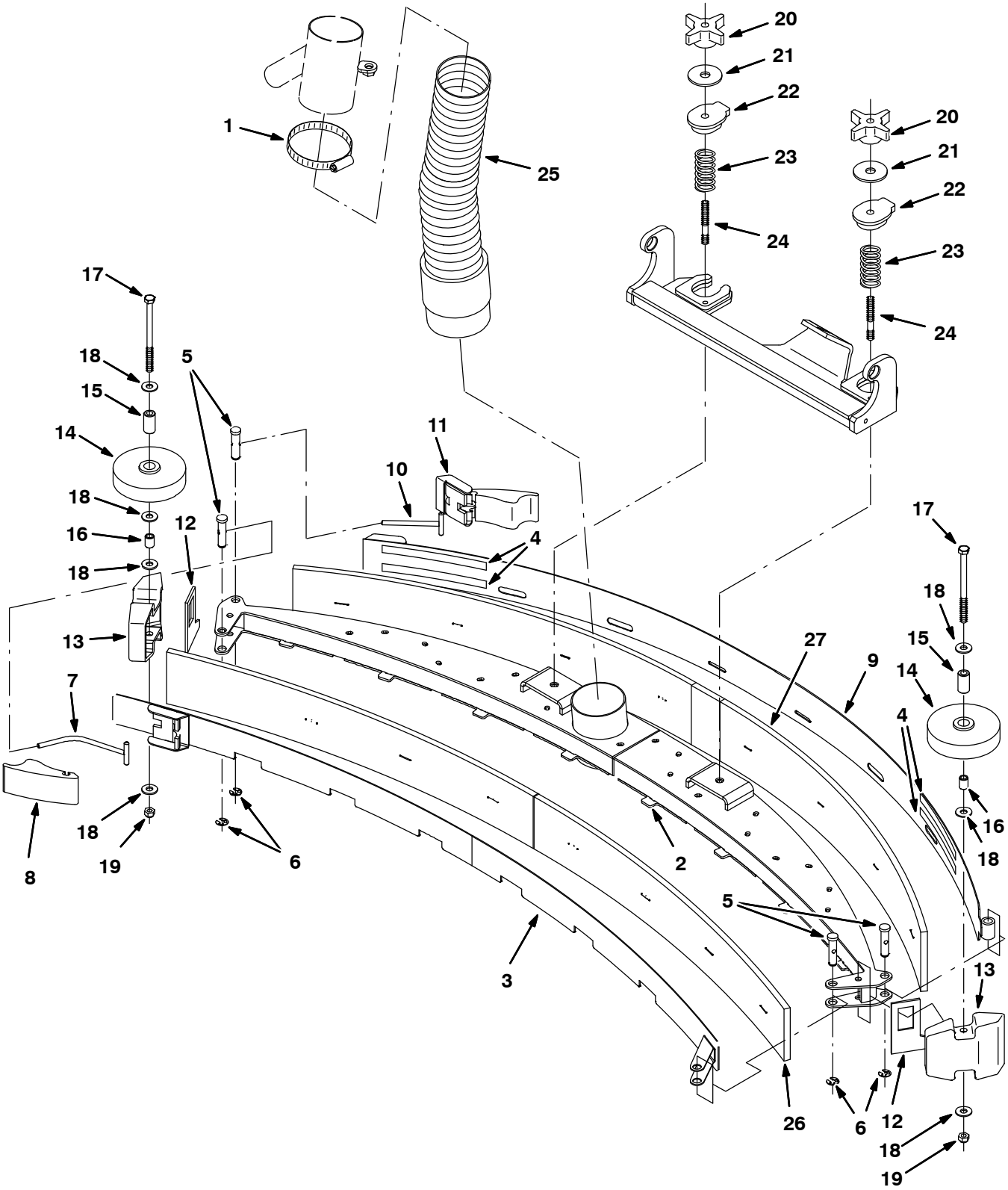

354440

Fig. 38 – Squeegee Group, Rear

	Ref.	Part No.	Serial Number	Description	Qty.
	1	43555	(000000–)	Clamp, Hose, Wormdrive, 2.50–3.50d, .50w	1
▽		9004493	(000000–)	Squeegee Kit, Rear, Replmt [M20/T20]	1
▲	2	1022831	(000000–)	Squeegee Wldt, Rear	1
▲	3	1023239	(000000–)	Clamp Wldt, Front	1
▲	4	03495	(000000–)	Strip, Non–Slip, 0.50w 06.0l	4
▲	5	21603	(000000–)	Pin, Grvd, 0.43d 01.8l [303ss]	4
▲	6	24555	(000000–)	Ring, Retaining, Ext, 0.38d, [E–Ring]	4
▲	7	386298	(000000–)	Pin Wldt, Front	1
▲	8	21601	(000000–)	Cam	1
▲	9	1028374	(000000–)	Clamp Wldt, Rear	1
▲	10	21606	(000000–)	Bar Wldt, Retainer, Sqge, Rear	1
▲	11	21602	(000000–)	Cam, Rear	1
▲	12	83874	(000000–)	Gasket, Sqge	2
▲	13	386264	(000000–)	Bumper, Sqge	2
▲	14	363162	(000000–)	Wheel, 4.0d 0.89w 0.64b	2
▲	15	363301	(000000–)	Sleeve, P/M, 0.34b 0.63d 1.2l, Bnz	2
▲	16	80395	(000000–)	Sleeve, P/M, 0.31b 0.50d 0.7l [430ss]	2
▲	17	364441	(000000–)	Screw, Hex, M8 X 1.25 X 110, Ss	2
▲	18	01685	(000000–)	Washer, Flat, 0.31, Ss	10
▲	19	08713	(000000–)	Nut, Hex, Lock, M8 X 1.25, Nl, Ss	2
	20	370100	(000000–)	Knob, Star, 2.80d 4ear 1.1l .31–18 Pyp	2
	21	04414	(000000–)	Washer, Flat, 0.53b 1.88d .12, Stl, Pl	2
	22	387433	(000000–)	Ring, Mtg, Sqge, .50l	2
	23	387500	(000000–)	Spring, Cmpr, 0.9od .042wir 02.0l	2
	24	387237	(000000–)	Stud, .31–18 2.75l M8 X 1.25, Ss	2
	25	1021511	(000000–)	Hose, Vacuum, 19.0l	1
	26	1017868	(000000–)	Blade, Sqge, Front, 49.58l [Linard]	1
	26	1027719	(000000–)	Blade, Sqge, Front, 49.58l Ure (Option)	1
	27	1031331	(000000–)	Blade, Sqge, Rear, Linatex	1
	27	1031945	(000000–)	Blade, Sqge, Rear, 53.78l Ure (Option)	1

Fig. 39 – Squeegee Linkage Group, Rear

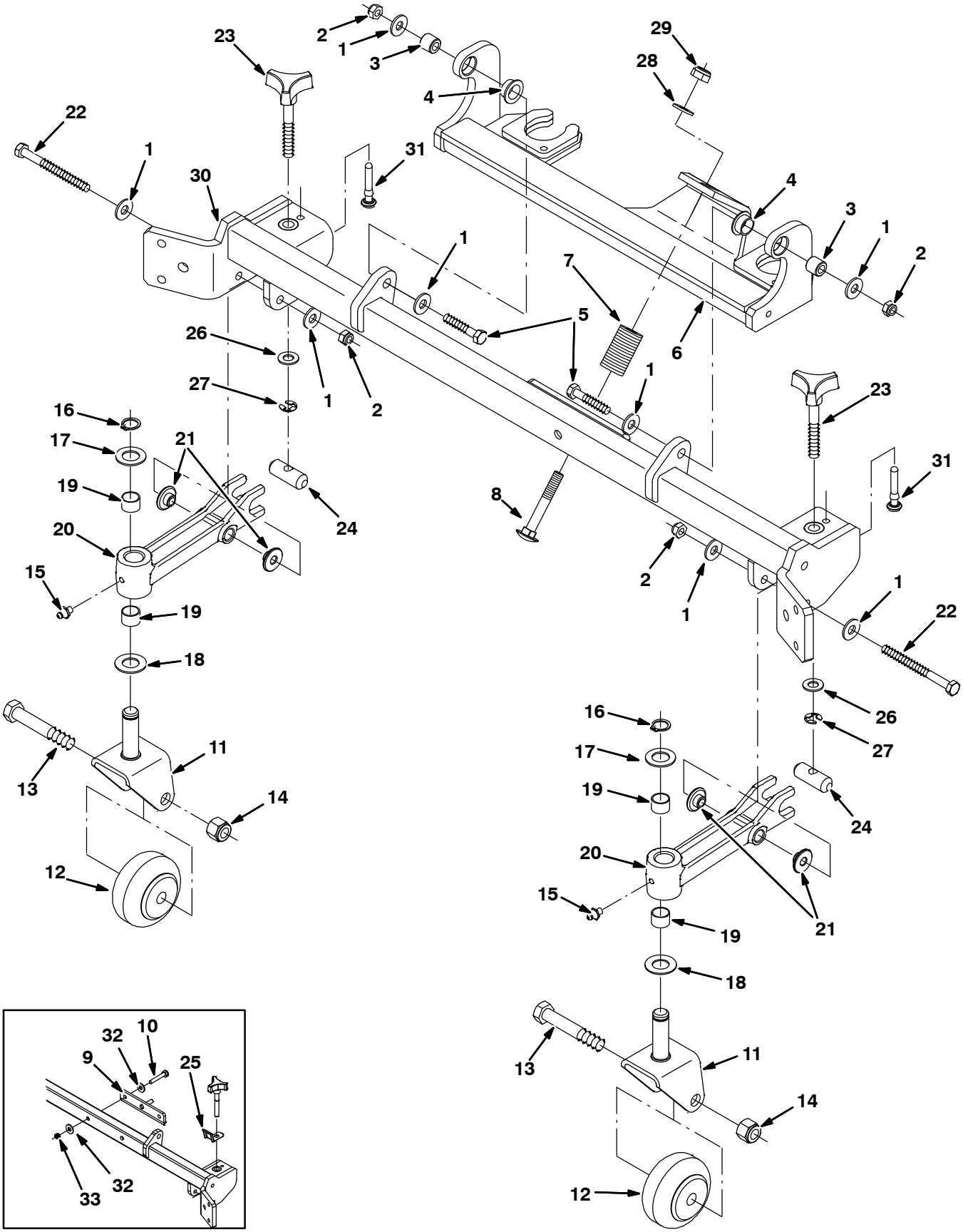

354441

Fig. 39 – Squeegee Linkage Group, Rear

Ref.	Part No.	Serial Number	Description	Qty.
1	01685	(000000–)	Washer, Flat, 0.31, Ss	6
2	08713	(000000–)	Nut, Hex, Lock, M8 X 1.25, Nl, Ss	4
3	80409	(000000–)	Sleeve, P/M, 0.34b 0.63d 0.6l, Bnz	2
4	25735	(000000–)	Bushing, Flng, 0.63b 0.75d 0.38l	2
5	222505	(000000–)	Screw, Hex, M8 X 1.25 X 45, Ss	2
6	1023476	(000000–)	Bracket Wldt, Mtg, Sqge	1
7	65180	(000000–)	Spring, Dsl, 1.00od 0.50id 1.7l	1
8	1025601	(000000–)	Bolt, Carriage, M10 X 1.5 X 70	1
9	1034147	(000000–002101)	Pin Wldt, Lift (Replaced by 9003478)	1
10	222505	(000000–002101)	Screw, Hex, M8 X 1.25 X 45, Ss	2
11	1021404	(000000–)	Bracket Wldt, Mtg, Caster	2
12	20833	(000000–)	Wheel, 3.0d 1.38w 0.50b	2
13	81952	(000000–)	Screw, Hex, .50–13 X 3.00, Ss18–8	2
14	02931	(000000–)	Nut, Hex, Lock, .50–13, Nl, Ss	2
15	07259	(000000–)	Fitting, Grease, Str Pm04 .47l	2
16	33373	(000000–)	Ring, Retaining, Ext, 0.62d, Hd	2
17	63468	(000000–)	Washer, Flat, 0.69b 1.19d .06, Stl, Pl	2
18	64425	(000000–)	Washer, Thrust, 0.61b 1.25d .06, Fgl	2
19	07449	(000000–)	Bushing, Sleeve, 0.62b 0.72d 0.50l, Fgl	4
20	1025460	(000000–)	Caster, Pivot	2
21	80950	(000000–)	Bushing, Flng, 0.32b 0.50d 0.24l, Bnz	4
22	39281	(000000–)	Screw, Hex, M8 X 1.25 X 90, 8.8	2
23	1021546	(000000–)	Knob Assy, Star, 1.12d 3ear M10	2
24	1021497	(000000–)	Pin, 0.63d 01.8l, 1/M10h, 2cham	2
25	1022545	(000000–002049)	Spring, Keeper	2
26	32485	(000000–)	Washer, Flat, 0.38 Sae	2
27	24555	(000000–)	Ring, Retaining, Ext, 0.38d, [E–Ring]	2
28	1014563	(000000–)	Washer, Flat, 0.40b 1.12d .12, Ss	1
29	08714	(000000–)	Nut, Hex, Lock, M10 X 1.5, Nl, Ss	1
30	1034149	(000000–)	Crossmember Wldt [M20]	1
31	1035727	(002050–)	Stop, Rotation	2
32	01685	(000000–002101)	Washer, Flat, 0.31, Ss	4
33	08713	(000000–002101)	Nut, Hex, Lock, M8 X 1.25, Nl, Ss	2

Fig. 40 – Squeegee Group, Right Side

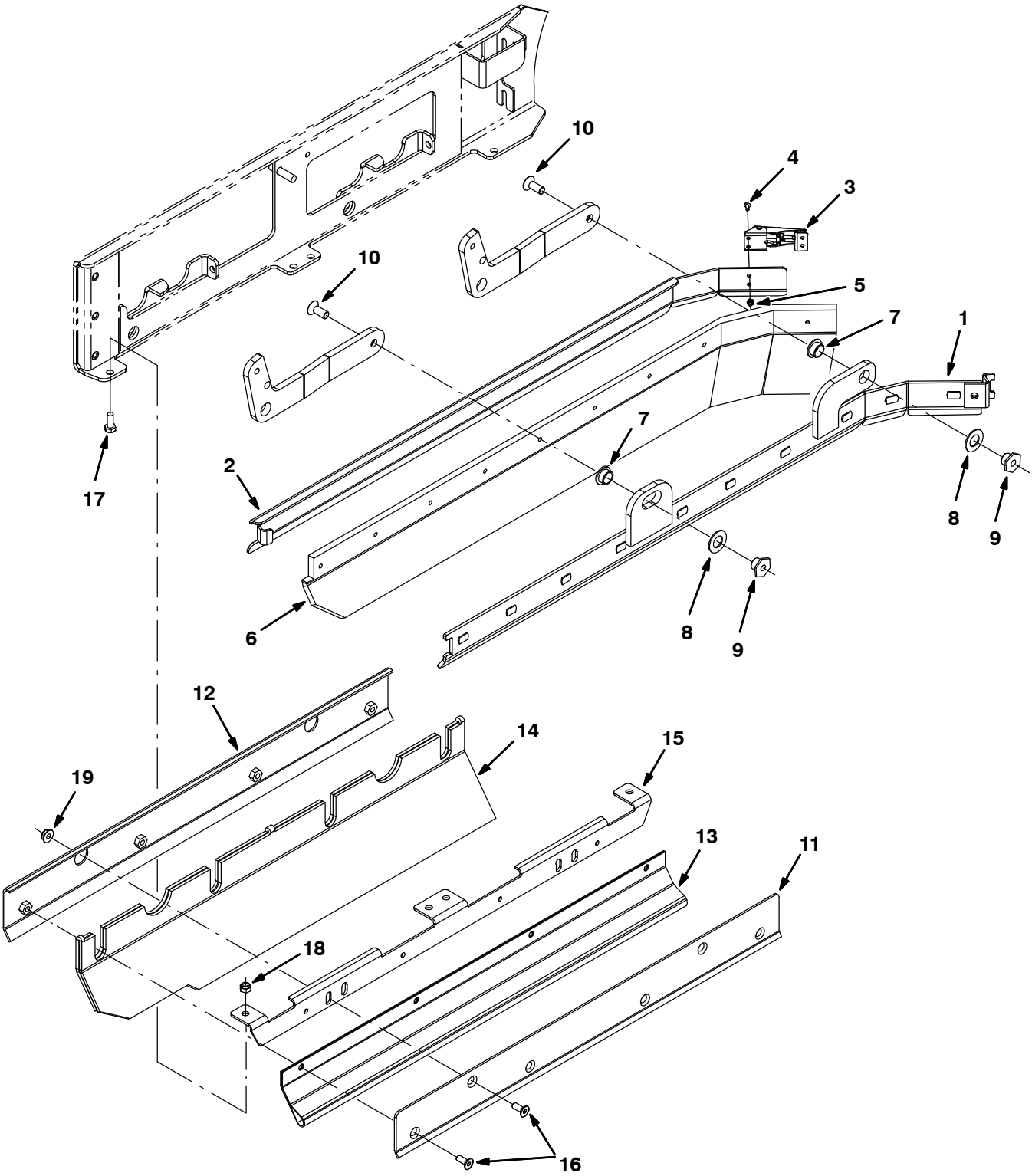

354442

Fig. 40 – Squeegee Group, Right Side

Ref.	Part No.	Serial Number	Description	Qty.
1	1029132	(000000–)	Frame Wldt, Sqge, Rh	1
2	1029128	(000000–)	Retainer, Sqge, Side, Rh	1
3	384418	(000000–)	Latch, Door [Southco 91–562–07]	1
4	49697	(000000–)	Screw, Pan, M4 X 0.7 X 10, Ss	2
5	33932	(000000–)	Nut, Hex, Lock, M4 X 0.7, Nl, Ss	2
6	1031011	(000000–)	Blade, Sqge, .38 3.55w 038.3l, Linatex	1
6	1031823	(000000–)	Blade, Sqge, .38 3.55w 038.3l, Ure (Option)	1
7	25735	(000000–)	Bushing, Flng, 0.63b 0.75d 0.38l	2
8	64425	(000000–)	Washer, Thrust, 0.61b 1.25d .06, Fgl	2
9	1022846	(000000–)	Nut, T, M10 X 1.50 X 15.8od X 13.0l	2
10	09081	(000000–)	Screw, Flt, M10 X 1.5 X 25, 10.9	2
11	1024584	(000000–)	Bracket, Mtg, Skirt, Brush Door	1
12	1024651	(000000–)	Bracket, Mtg, Skirt, Door	1
13	1024586	(000000–)	Skirt, Neo, .06, 06.85w 27.95l, 08 Hole	1
14	1019295	(000000–)	Skirt, Neo, .18, 10.37w 27.95l, 12 H&S	1
15	1025151	(000000–)	Bracket, Mtg, Skirt, Door, Brush	1
16	222463	(000000–)	Screw, Flt, M8 X 1.25 X 20, Blk	6
17	393135	(000000–)	Screw, Btn, M8 X 1.25 X 20, Blk	4
18	08713	(000000–)	Nut, Hex, Lock, M8 X 1.25, Nl, Ss	4
19	07791	(000000–)	Nut, Hex, Flng, M8 X 1.25	2

Fig. 41 – Squeegee Lift Group, Right Side

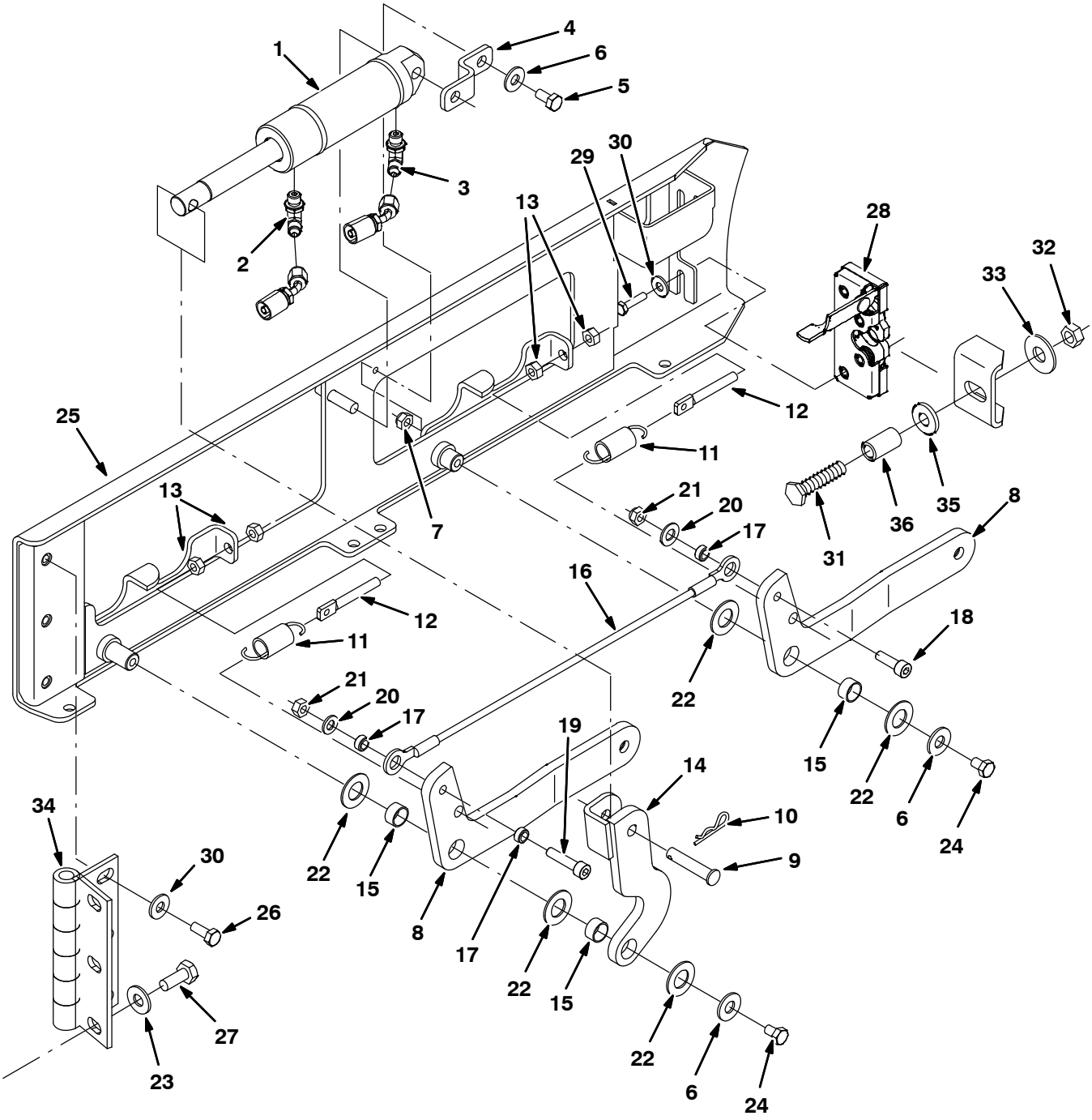

354443

Fig. 41 – Squeegee Lift Group, Right Side

Ref.	Part No.	Serial Number	Description	Qty.
1	1038137	(000000–)	Cylinder, Hyd, 1.5b 07.8l 02.80strk 2500	1
2	77097	(000000–)	Fitting, Hyd, E90, Jm04/Om04	1
3	1028635	(000000–)	Fitting, Hyd, Rst, Spcl	1
4	1022825	(000000–)	Bracket, Mtg, Cyl	1
5	08716	(000000–)	Screw, Hex, M6 X 1.00 X 20, Ss	1
6	01685	(000000–)	Washer, Flat, 0.31, Ss	3
7	08713	(000000–)	Nut, Hex, Lock, M8 X 1.25, Nl, Ss	1
8	1020548	(000000–)	Arm, Sqge, Side, Rh	2
9	17461	(000000–)	Pin, Clevis, 0.37D X 1.75L	1
10	08182	(000000–)	Pin, Cotter, .125 X 1.00	1
11	87816	(000000–)	Spring, Extn, 0.75od X 0.09wir, 2.5l	2
12	386088	(000000–)	Bolt, Eye, M08 X 1.25 X 070mm, 05.50 Eye	2
13	07786	(000000–)	Nut, Hex, Std, M8 X 1.25, Ss	4
14	1023306	(000000–)	Arm Wldt, Sqge, Lift, Rh	1
15	71607	(000000–)	Bushing, Sleeve, 0.63b 0.72d 0.38l	3
16	81784	(000000–)	Cable, Glv .13d 015.8l .50eye /.50eye	1
17	360801	(000000–)	Sleeve, 0.31b 0.50d 0.3l, Ss	3
18	39308	(000000–)	Screw, Soc, M8 X 1.25 X 25, 12.9	1
19	41445	(000000–)	Screw, Soc, M8 X 1.25 X 35, 12.9	1
20	39349	(000000–)	Washer, Flat, 0.31 Sae	2
21	08709	(000000–)	Nut, Hex, Lock, M8 X 1.25, Nl	2
22	64425	(000000–)	Washer, Thrust, 0.61b 1.25d .06, Fgl	5
23	41187	(000000–)	Washer, Flat, Belleville, .38	3
24	09740	(000000–)	Screw, Hex, M8 X 1.25 X 20, Ss	2
25	1019031	(000000–)	Door Wldt, Brush, Rh	1
26	09028	(000000–)	Screw, Hex, M10 X 1.5 X 25, Ss	3
27	09740	(000000–)	Screw, Hex, M8 X 1.25 X 20, Ss	3
28	59194	(000000–)	Latch, Hook	1
29	09007	(000000–)	Screw, Hex, M6 X 1.0 X 25, Ss	2
30	41185	(000000–)	Washer, Flat, Belleville, .25	5
31	379870	(000000–)	Screw, Hex, M12 X 1.75 X 55, Ss	1
32	07788	(000000–)	Nut, Hex, Std, M12 X 1.75, Ss	1
33	41619	(000000–)	Washer, Flat, 0.56b 1.38d .11, Ss	1
34	1024576	(000000–)	Hinge, .50pin .19 4.0w 06.0l 3/0.44sl	1
35	36328	(000000–)	Washer, Flat, Belleville, .50	1
36	1039348	(000000–)	Sleeve, 0.49b 0.68d 1.2l [304ss]	1

Fig. 42 – Squeegee Group, Left Side

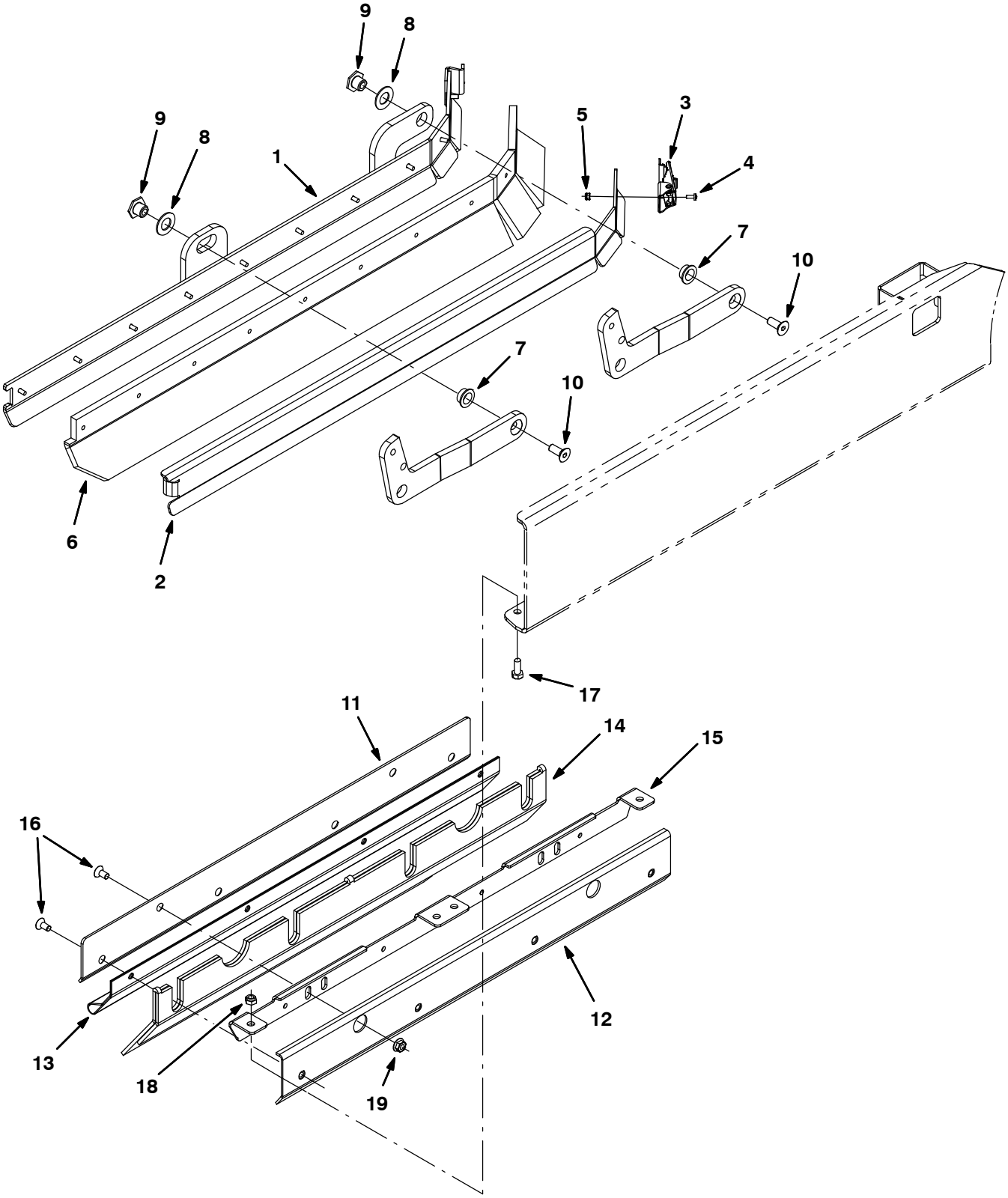

354444

Fig. 42 - Squeegee Group, Left Side

Ref.	Part No.	Serial Number	Description	Qty.
1	1028972	(000000-)	Frame Wldt, Sqge, Lh	1
2	1028979	(000000-)	Retainer, Sqge, Side, Lh	1
3	384418	(000000-)	Latch, Door [Southco 91- 562- 07]	1
4	49697	(000000-)	Screw, Pan, M4 X 0.7 X 10, Ss	2
5	33932	(000000-)	Nut, Hex, Lock, M4 X 0.7, Nl, Ss	2
6	1031011	(000000-)	Blade, Sqge, .38 3.55w 038.3l, Linatex	1
6	1031823	(000000-)	Blade, Sqge, .38 3.55w 038.3l, Ure (Option)	1
7	25735	(000000-)	Bushing, Flng, 0.63b 0.75d 0.38l	2
8	64425	(000000-)	Washer, Thrust, 0.61b 1.25d .06, Fgl	2
9	1022846	(000000-)	Nut, T, M10 X 1.50 X 15.8od X 13.0l	2
10	09081	(000000-)	Screw, Flt, M10 X 1.5 X 25, 10.9	2
11	1024584	(000000-)	Bracket, Mtg, Skirt, Brush Door	1
12	1024651	(000000-)	Bracket, Mtg, Skirt, Door	1
13	1024586	(000000-)	Skirt, Neo, .06, 06.85w 27.95l, 08 Hole	1
14	1019295	(000000-)	Skirt, Neo, .18, 10.37w 27.95l, 12 H&S	1
15	1025151	(000000-)	Bracket, Mtg, Skirt, Door, Brush	1
16	222463	(000000-)	Screw, Flt, M8 X 1.25 X 20, Blk	6
17	393135	(000000-)	Screw, Btn, M8 X 1.25 X 20, Blk	4
18	08713	(000000-)	Nut, Hex, Lock, M8 X 1.25, Nl, Ss	4
19	07791	(000000-)	Nut, Hex, Flng, M8 X 1.25	2

Fig. 43 – Squeegee Lift Group, Left Side

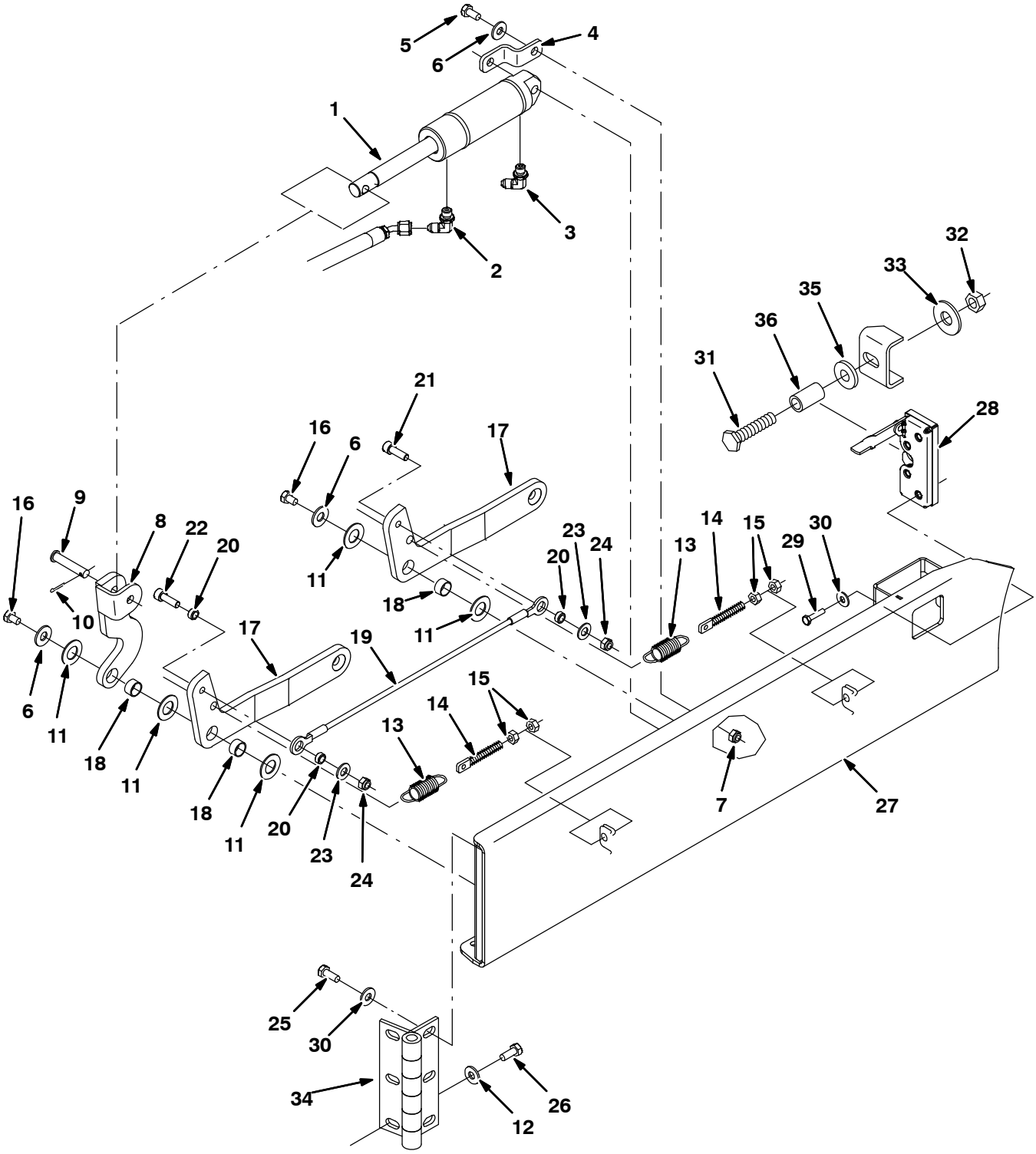

354445

Fig. 43 – Squeegee Lift Group, Left Side

Ref.	Part No.	Serial Number	Description	Qty.
1	1038137	(000000–)	Cylinder, Hyd, 1.5b 07.8l 02.80strk 2500	1
2	77097	(000000–)	Fitting, Hyd, E90, Jm04/Om04	1
3	1028635	(000000–)	Fitting, Hyd, Rst, Spcl	1
4	1022825	(000000–)	Bracket, Mtg, Cyl	1
5	08716	(000000–)	Screw, Hex, M6 X 1.00 X 20, Ss	1
6	01685	(000000–)	Washer, Flat, 0.31, Ss	3
7	08713	(000000–)	Nut, Hex, Lock, M8 X 1.25, Nl, Ss	1
8	1022978	(000000–)	Arm Wldt, Lift, Sqge, Lh	1
9	17461	(000000–)	Pin, Clevis, 0.37D X 1.75L	1
10	08182	(000000–)	Pin, Cotter, .125 X 1.00	1
11	64425	(000000–)	Washer, Thrust, 0.61b 1.25d .06, Fgl	5
12	41187	(000000–)	Washer, Flat, Belleville, .38	3
13	87816	(000000–)	Spring, Extn, 0.75od X 0.09wir, 2.5l	2
14	386088	(000000–)	Bolt, Eye, M08 X 1.25 X 070mm, 05.50 Eye	2
15	07786	(000000–)	Nut, Hex, Std, M8 X 1.25, Ss	4
16	09740	(000000–)	Screw, Hex, M8 X 1.25 X 20, Ss	2
17	1023307	(000000–)	Arm, Sqge, Side, Lh	2
18	71607	(000000–)	Bushing, Sleeve, 0.63b 0.72d 0.38l	3
19	81784	(000000–)	Cable, Glv .13d 015.8l .50eye /.50eye	1
20	360801	(000000–)	Sleeve, 0.31b 0.50d 0.3l, Ss	3
21	39308	(000000–)	Screw, Soc, M8 X 1.25 X 25, 12.9	1
22	41445	(000000–)	Screw, Soc, M8 X 1.25 X 35, 12.9	1
23	39349	(000000–)	Washer, Flat, 0.31 Sae	2
24	08709	(000000–)	Nut, Hex, Lock, M8 X 1.25, Nl	2
25	09028	(000000–)	Screw, Hex, M10 X 1.5 X 25, Ss	3
26	09740	(000000–)	Screw, Hex, M8 X 1.25 X 20, Ss	6
27	1023314	(000000–)	Door Wldt, Brush, Lh	1
28	59195	(000000–)	Latch, Hook	1
29	09007	(000000–)	Screw, Hex, M6 X 1.0 X 25, Ss	2
30	41185	(000000–)	Washer, Flat, Belleville, .25	5
31	379870	(000000–)	Screw, Hex, M12 X 1.75 X 55, Ss	1
32	07788	(000000–)	Nut, Hex, Std, M12 X 1.75, Ss	1
33	41619	(000000–)	Washer, Flat, 0.56b 1.38d .11, Ss	1
34	1024576	(000000–)	Hinge, .50pin .19 4.0w 06.0l 3/0.44sl	1
35	36328	(000000–)	Washer, Flat, Belleville, .50	1
36	1039348	(000000–)	Sleeve, 0.49b 0.68d 1.2l [304ss]	1

Fig. 44 – Solution Tank Group

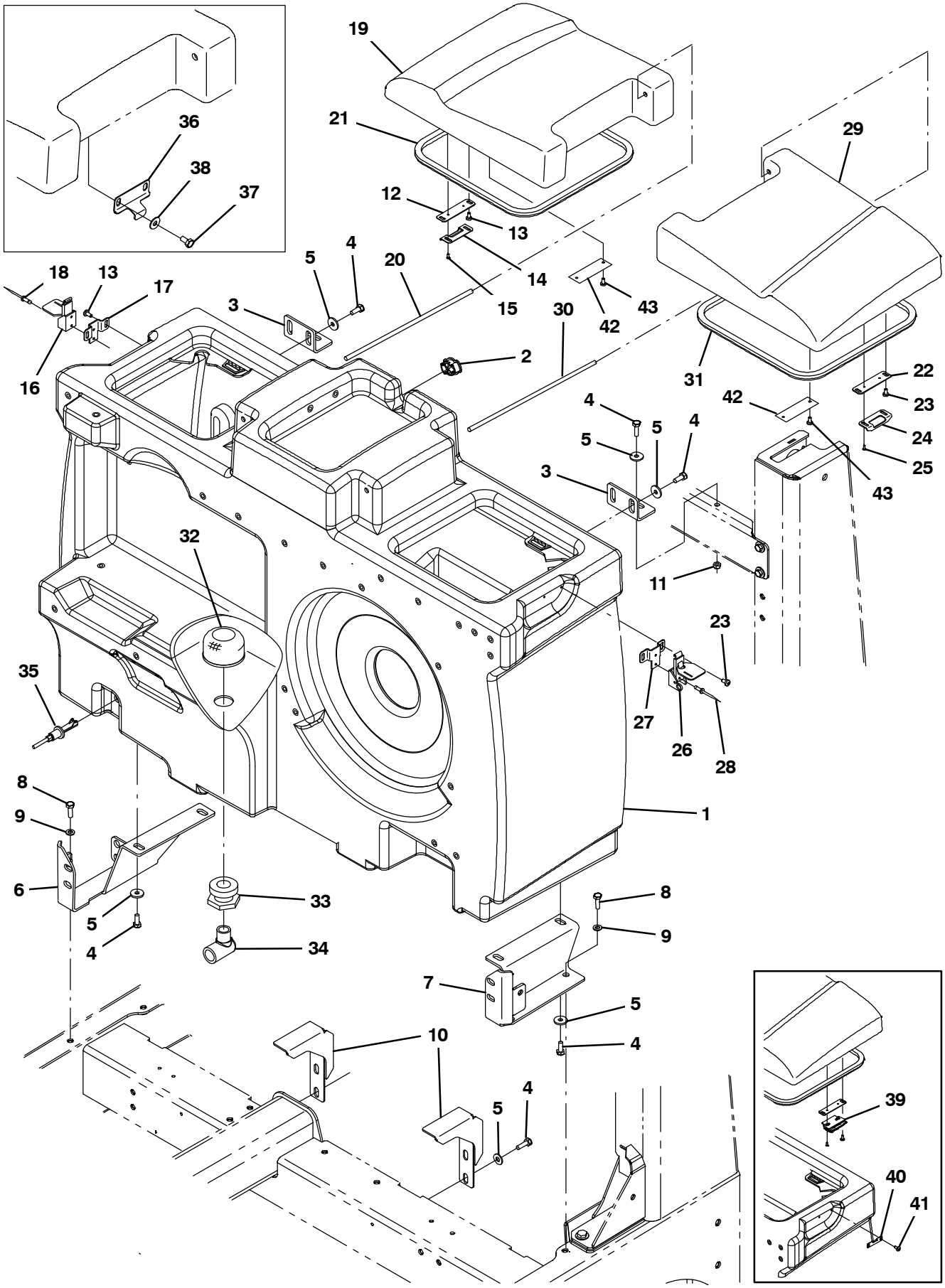

354446, M20

Fig. 44 – Solution Tank Group

	Ref.	Part No.	Serial Number	Description	Qty.
	1	1027381	(002413–)	Tank, Soltn, W/ Label [M20]	1
	1	9004117	(000000–002412)	Tank Kit, Soltn, W/ Bracket, Replmt	1
	2	390994	(000000–)	Plug, Hole, Soltn Tank, Blk Pyu	1
	3	1020209	(000000–)	Angle, Sppt, Tank, Rear	2
	4	09740	(000000–)	Screw, Hex, M8 X 1.25 X 20, Ss	12
	5	1017218	(000000–)	Washer, Flat, 0.32b 1.00d .12, Ss	12
	6	1040306	(000000–)	Bracket Wldt, Tank, Soltn, Rh	1
	7	1024591	(000000–)	Bracket, Tank, Soltn, Lh	1
	8	09010	(000000–)	Screw, Hex, M8 X 1.25 X 25, Ss	4
	9	39349	(000000–)	Washer, Flat, 0.31 Sae	4
	10	1024389	(000000–)	Bracket, Soltn, Tank, Cntr	2
	11	08713	(000000–)	Nut, Hex, Lock, M8 X 1.25, Nl, Ss	2
▽		9003069	(000000–)	Cover Kit, Soltn Tank, Rh [M20 & T20]	1
▲▽		9005165	(000000–)	Latch Kit, Cover, Soltn, Replmt[M20/T20]	1
▲▲	12	1039757	(002426–)	Plate, Mtg, Latch	1
▲▲	13	382320	(000000–)	Screw, Pan, Phl, 12–16 X 0.50, F/ Plstc	4
▲▲	14	1048474	(002798–)	Catch, Latch, Tank Cover	1
▲▲	15	222267	(002798–)	Screw, Pan, Phl, 06–20 X 0.50, Fmg/Ab	2
▲▲	16	367949	(002798–)	Latch	1
▲▲	17	1048512	(002798–)	Bracket, Mtg, Latch, Tank Cover	1
▲▲	18	08875	(002798–)	Rivet, Blind, .125d X 0.54 X .25d, Alm	2
▲	19	1022176	(000000–)	Cover, Tank, Soltn, Rh, Trimmed	1
▲	20	1047098	(000000–)	Bar, Rnd, Plstc, 0.31d 12.5l	1
▲	21	1038805	(000000–)	Seal, Bulb, Str, .50Hi .50W 047.2L, Adh	1
▽		9003071	(000000–)	Cover Kit, Tank, Soltn, Rh, Replmt, Ce (Japan and CE Only)	1
▲▽		9005165	(000000–)	Latch Kit, Cover, Soltn, Replmt[M20/T20]	1
▲▲	12	1039757	(002426–)	Plate, Mtg, Latch	1
▲▲	13	382320	(000000–)	Screw, Pan, Phl, 12–16 X 0.50, F/ Plstc	4
▲▲	14	1048474	(002798–)	Catch, Latch, Tank Cover	1
▲▲	15	222267	(002798–)	Screw, Pan, Phl, 06–20 X 0.50, Fmg/Ab	2
▲▲	16	367949	(002798–)	Latch	1
▲▲	17	1048512	(002798–)	Bracket, Mtg, Latch, Tank Cover	1
▲▲	18	08875	(002798–)	Rivet, Blind, .125d X 0.54 X .25d, Alm	2
▲	19	1031233	(000000–)	Cover, Tank, Soltn, Rh, Trimmed, Ce (Japan and CE Only)	1
▲	20	1047098	(000000–)	Bar, Rnd, Plstc, 0.31d 12.5l	1
▲	21	1038805	(000000–)	Seal, Bulb, Str, .50Hi .50W 047.2L, Adh	1

(CONTINUED)

Fig. 44 – Solution Tank Group

	Ref.	Part No.	Serial Number	Description	Qty.
▽		9003068	(000000–)	Cover Kit, Tank, Soltn, Lh, Replmt	1
▲▽		9005165	(000000–)	Latch Kit, Cover, Soltn, Replmt[M20/T20]	1
▲▲	22	1039757	(002426–)	Plate, Mtg, Latch	1
▲▲	23	382320	(000000–)	Screw, Pan, Phl, 12–16 X 0.50, F/ Plstc	4
▲▲	24	1048474	(002798–)	Catch, Latch, Tank Cover	1
▲▲	25	222267	(002798–)	Screw, Pan, Phl, 06–20 X 0.50, Fmg/Ab	2
▲▲	26	367949	(002798–)	Latch	1
▲▲	27	1048512	(002798–)	Bracket, Mtg, Latch, Tank Cover	1
▲▲	28	08875	(002798–)	Rivet, Blind, .125d X 0.54 X .25d, Alm	2
▲	29	1022182	(000000–)	Cover, Tank, Soltn, Lh, Trimmed	1
▲	30	1047098	(000000–)	Bar, Rnd, Plstc, 0.31d 12.5l	1
▲	31	1038805	(000000–)	Seal, Bulb, Str, .50Hi .50W 047.2L, Adh	1
▽		9003070	(000000–)	Cover Kit, Tank, Soltn, Lh, Replmt, Ce (Japan and CE Only)	1
▲▽		9005165	(000000–)	Latch Kit, Cover, Soltn, Replmt[M20/T20]	1
▲▲	22	1039757	(002426–)	Plate, Mtg, Latch	1
▲▲	23	382320	(000000–)	Screw, Pan, Phl, 12–16 X 0.50, F/ Plstc	4
▲▲	24	1048474	(002798–)	Catch, Latch, Tank Cover	1
▲▲	25	222267	(002798–)	Screw, Pan, Phl, 06–20 X 0.50, Fmg/Ab	2
▲▲	26	367949	(002798–)	Latch	1
▲▲	27	1048512	(002798–)	Bracket, Mtg, Latch, Tank Cover	1
▲▲	28	08875	(002798–)	Rivet, Blind, .125d X 0.54 X .25d, Alm	2
▲	29	1031235	(000000–)	Cover, Tank, Soltn, Lh, Trimmed, Ce (Japan and CE Only)	1
▲	30	1047098	(000000–)	Bar, Rnd, Plstc, 0.31d 12.5l	1
▲	31	1038805	(000000–)	Seal, Bulb, Str, .50Hi .50W 047.2L, Adh	1
	32	1027290	(000000–)	Filter, Soltn, 20mesh, Pm12 3.1d 02.6l	1
	33	377349	(000000–)	Fitting, Plstc, Pf12/Pf12, Bh	1
	34	69785	(000000–)	Fitting, Plstc, E90, Pf12/Pm12	1
	35	385685	(000000–)	Sensor, Level, Liq, 14vdc 01a .62–11	1
	36	1020428	(000000–002425)	Bracket, Latch, Cover	2
	37	09744	(000000–002425)	Screw, Hex, M6 X 1.00 X 12, Ss	4
	38	01684	(000000–002425)	Washer, Flat, 0.27b 0.69d .05, Ss	4
	39	1030617	(002426–002797)	Latch, Cover	2
	40	1029748	(002426–002797)	Bracket, Keeper, Latch	2
	41	382320	(002426–002797)	Screw, Pan, Phl, 12–16 X 0.50, F/ Plstc	4
	42	1017101	(000000–)	Plate, Label, Soltn Tank (ec–H20 only)	2
	43	360973	(000000–)	Screw, Pan, 12–16 X 0.50, F/ Plstc (ec–H20 only)	4

Fig. 45 – Solution Tank Drain Group

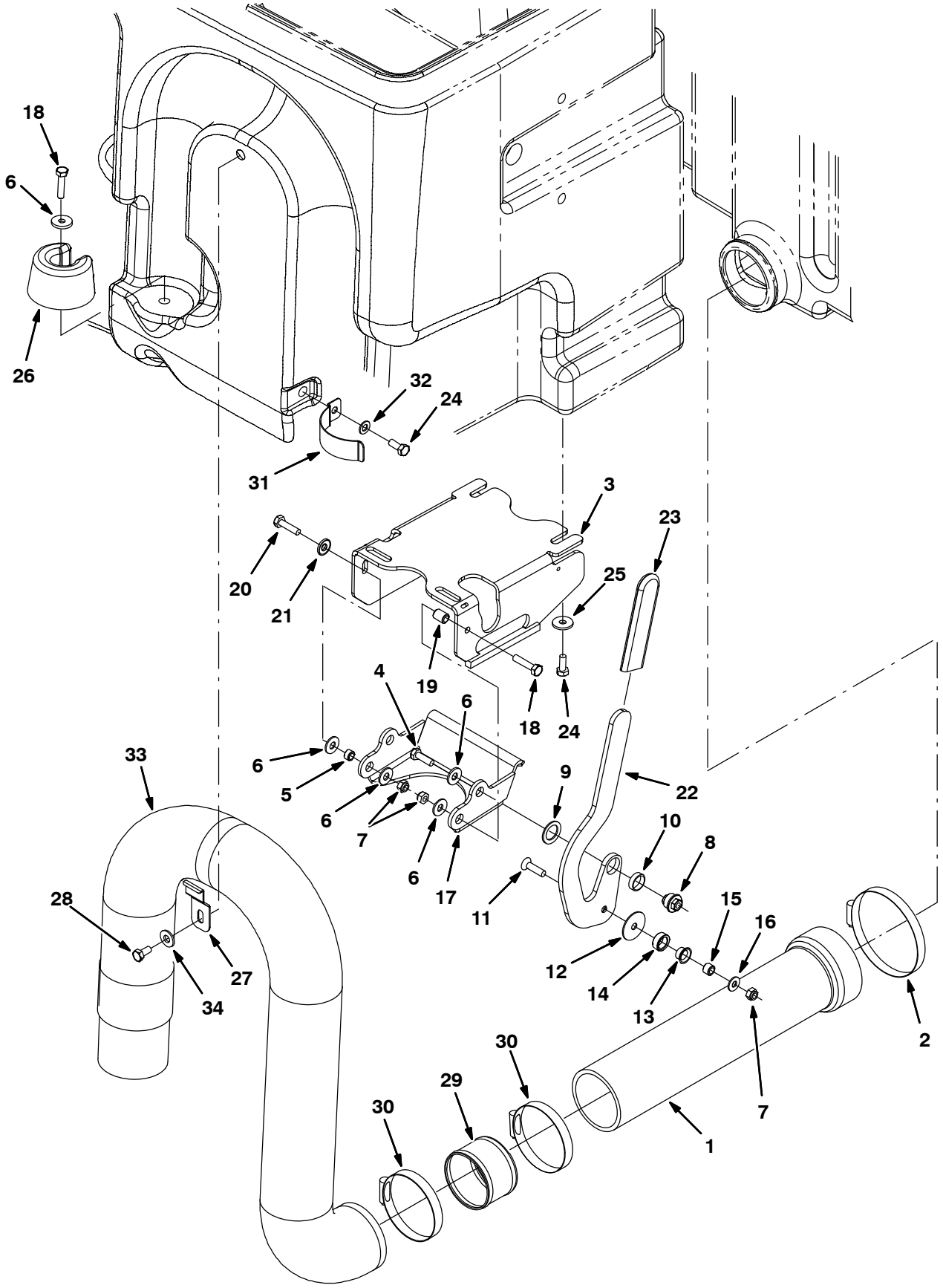

354447

Fig. 45 – Solution Tank Drain Group

Ref.	Part No.	Serial Number	Description	Qty.
1	9003793	(000000–)	Tube Kit, Tank, Soltn, Replmt	1
2	23498	(000000–)	Clamp, Hose, Wormdrive, 3.56–4.50d, .50w	1
3	1042003	(000000–)	Mount Wldt, Valve, Pinch, Rh	1
4	39277	(000000–)	Screw, Hex, M8 X 1.25 X 25, 8.8	1
5	222516	(000000–)	Sleeve, P/M, 0.31b 0.50d 0.3l [430ss]	1
6	32491	(000000–)	Washer, Flat, 0.31, Std	5
7	08713	(000000–)	Nut, Hex, Lock, M8 X 1.25, Nl, Ss	3
8	1024599	(000000–)	Bushing, Eccentric, Adj	1
9	1026051	(000000–)	Washer, Flat, 0.79b 1.18d .06, Nyl	1
10	74090	(000000–)	Bushing, Sleeve, 0.75b 0.88d 0.25l	1
11	79506	(000000–)	Screw, Flt, M8 X 1.25 X 30, Ss	1
12	1028701	(000000–)	Washer, Thrust, 0.34b 1.50d .06	1
13	15648	(000000–)	Bushing, Flng, 0.50b 0.59d 0.38l	1
14	1028691	(000000–)	Roller, Brg	1
15	1028690	(000000–)	Tube, 0.50d 0.32b 00.4l, Ss	1
16	1017218	(000000–)	Washer, Flat, 0.32b 1.00d .12, Ss	1
17	1024535	(000000–)	Arm, Pinch	1
18	06955	(000000–)	Screw, Hex, M8 X 1.25 X 35, 8.8	2
19	80395	(000000–)	Sleeve, P/M, 0.31b 0.50d 0.7l [430ss]	1
20	76570	(000000–)	Screw, Hex, M8 X 1.25 X 30, 8.8	1
21	41186	(000000–)	Washer, Flat, Belleville, .31	1
22	1026727	(000000–)	Handle, Valve, Pinch, Rh	1
23	1023502	(000000–)	Grip, Handle	1
24	09740	(000000–)	Screw, Hex, M8 X 1.25 X 20, Ss	5
25	1017218	(000000–)	Washer, Flat, 0.32b 1.00d .12, Ss	4
26	1022137	(000000–)	Plug, Hose, Pyu	1
27	1025480	(000000–)	Bracket, Retaining, Hose	1
28	15675	(000000–)	Screw, Hex, M8 X 1.25 X 16, Ss	1
29	1041953	(000000–)	Tube, 2.90id 3.00od 02.4l, Ss	2
30	43555	(000000–)	Clamp, Hose, Wormdrive, 2.50–3.50d, .50w	2
31	1024558	(000000–)	Strap, Retaining, Hose	1
32	39349	(000000–)	Washer, Flat, 0.31 Sae	1
33	1019424	(000000–)	Hose, Drain, 3.00id X 48.0l	1
34	01685	(000000–)	Washer, Flat, 0.31, Ss	2

Fig. 46 – Solution Control Group

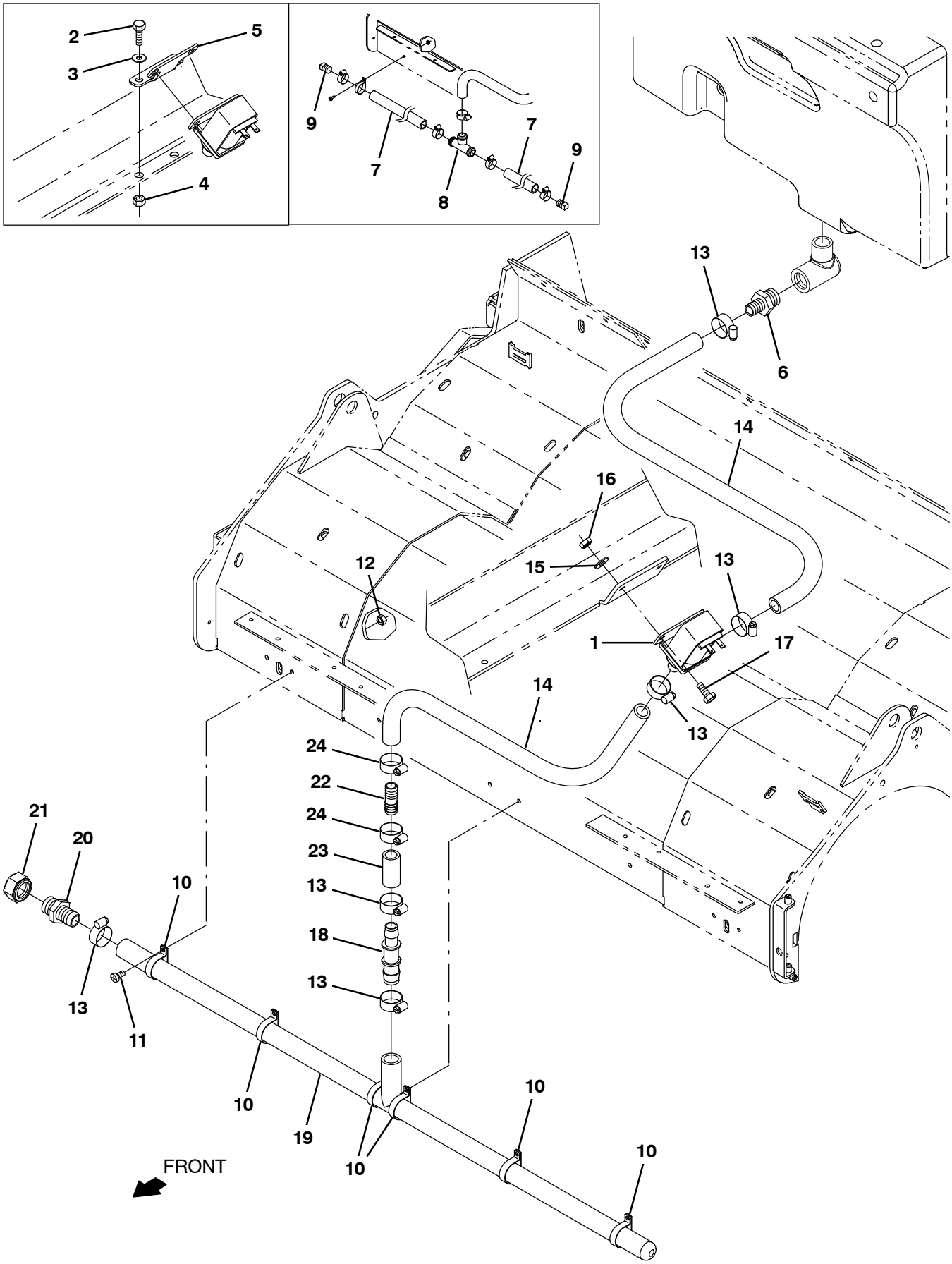

354448

Fig. 46 – Solution Control Group

Ref.	Part No.	Serial Number	Description	Qty.
1	1067700	(000000–)	Valve Assy, Water, Solenoid , 12vdc	1
2	08716	(000000–002241)	Screw, Hex, M6 X 1.0 X 20, Ss	2
3	01684	(000000–002241)	Washer, Flat, 0.25, Ss	2
4	08712	(000000–002241)	Nut, Hex, Lock, M6 X 1.0, Ss, Nl	2
5	1028074	(000000–002241)	Bracket, Mtg, Valve	1
6	79273–2	(000000–007259)	Fitting, Plstc, Str, Bm12/Pm12	1
6	365095	(007260–)	Fitting, Plstc, Str, Bm10/Pm12	1
7	1029185	(000000–002143)	Tube, Distribution, Water	2
8	41315	(000000–002143)	Fitting, Plstc, Tee, Bm12/Bm12/Bm12	1
9	17521	(000000–002143)	Fitting, Pipe, Plug, Pm08, Sq Head	2
10	50544	(000000–)	Clamp, Cable, Ss, 1.12d X 0.38w, 1h	6
11	09200	(000000–)	Screw, Pan, M5 X 0.8 X 12, Ss	6
12	09739	(000000–)	Nut, Hex, Lock, M5 X 0.8, Nl, Ss	6
13	63810	(000000–)	Clamp, Hose, Wormdrive, 0.56–1.06d, .56w	8
14	1015045	(000000–007259)	Hose, Afmkt, Pvc, Brd 0.75id 08ft	1
14	1015032	(007260–)	Hose, Afmkt, Pvc, Brd, 0.62id, 08ft, Clr	1
15	01684	(000000–)	Washer, Flat, 0.25, Ss	2
16	08712	(000000–)	Nut, Hex, Lock, M6 X 1.0, Ss, Nl	2
17	08716	(000000–)	Screw, Hex, M6 X 1.0 X 20, Ss	2
18	1038074	(002144–007259)	Fitting, Plstc, Str, Bm12/Bm12	1
18	363543	(007260–)	Fitting, Plstc, Str, Bm10/Bm12	1
19	1036997	(002144–)	Manifold, Bar, Spray, 37.5inch	1
20	79273–2	(002144–)	Fitting, Plstc, Str, Bm12/Pm12	1
21	1039064	(002144–)	Fitting, Plstc, Cap, Pf12 Hex	1
22	365164	(007260–)	Fitting, Plstc, Str, Bm10/Bm10	1
23	1015033	(007260–)	Hose, Afmkt, Pvc, Brd, 0.62id, 01ft, Clr	1
24	63810	(007260–)	Clamp, Hose, Wormdrive, 0.56–1.06d, .56w	2

Fig. 47 – Recovery Tank Group

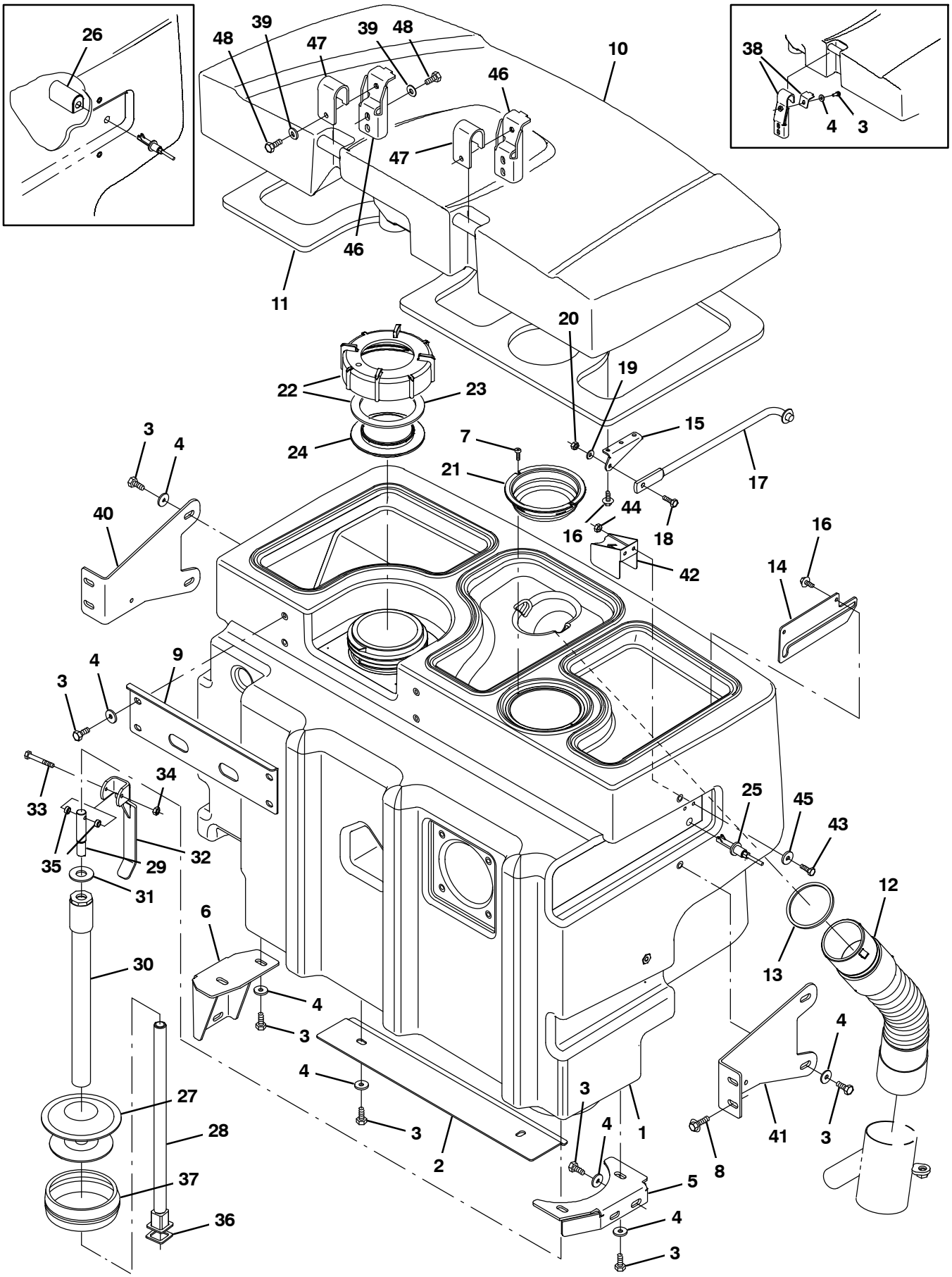

354449

Fig. 47 – Recovery Tank Group

	Ref.	Part No.	Serial Number	Description	Qty.
	1	1021419	(000000–)	Tank, Recvy, Trimmed	1
	2	1024403	(000000–)	Plate, Tank, Bottom	1
	3	09740	(000000–)	Screw, Hex, M8 X 1.25 X 20, Ss	17
	4	1017218	(000000–)	Washer, Flat, 0.32b 1.00d .12, Ss	15
	5	1020335	(000000–)	Bracket, Sppt, Tank, Lh	1
	6	1020331	(000000–)	Bracket, Sppt, Tank, Rh	1
	7	382320	(000000–)	Screw, Pan, #12–16 X 0.50, F/ Plstc	2
	8	1037346	(000000–)	Screw, Hex, M8 X 1.25 X 25, 9.8, Sems	4
	9	1021090	(000000–)	Plate, Sppt, Tank	1
	10	1022167	(000000–)	Cover, Tank, Recvy, Trimmed	1
	11	1021879	(000000–)	Gasket, Cover, Recvy Tank	1
	12	1031610	(000000–)	Hose Assy, Sqge	1
	13	1021920	(000000–)	Gasket, 3.23id 3.63od .16th, Ure	1
	14	1025620	(000000–)	Plate, Mtg, Prop Rod	1
	15	1025619	(000000–)	Bracket, Mtg, Prop Rod	1
	16	1046798	(000000–)	Screw, Hex, .25–14 X 0.75, Fmg/Ab, Ss	4
	17	54615	(000000–)	Arm Wldt, Safety, Sppt, Seat, .38d 10.1l	1
	18	08716	(000000–)	Screw, Hex, M6 X 1.0 X 20, Ss	1
	19	01684	(000000–)	Washer, Flat, 0.25, Ss	1
	20	08712	(000000–)	Nut, Hex, Lock, M6 X 1.0, Ss, Nl	1
	21	1026014	(000000–)	Screen, Vacuum	1
▽	22	24358	(000000–)	Cap Assy, Tank, Drain	1
▲	23	1031699	(000000–)	Gasket, 4.05id 5.29od .19 [Buna]	1
	24	86636	(000000–)	Cover, Tank	1
	25	385685	(000000–)	Sensor, Level, Liq, 14vdc 01a .62–11	1
	26	9003449	(000000–002024)	Cover Kit, Switch, Float, Repair	1
▽		9003313	(000000–)	Plug Kit, Drain, Recvy, Ci [M20 & T20]	1
▲	27	1022370	(000000–)	Plug, Drain, Expandable, 4.75–6.00	1
▲	28	1028328	(000000–)	Tube Wldt, Plug, Drain	1
▲	29	1028173	(000000–)	Pin, Lift, Drain	1
▲	30	1072885	(000000–)	Tube Assy, Plug, Drain	1
▲	31	1028522	(000000–)	Washer, Flat, .78b 1.75d .18, Ss	1
▲	32	1028211	(000000–)	Handle Wldt, Drain	1
▲	33	58979	(000000–)	Screw, Hex, M6 X 1.0 X 55, Ss	1
▲	34	08712	(000000–)	Nut, Hex, Lock, M6 X 1.0, Ss, Nl	1
▲	35	360801	(000000–)	Sleeve, 0.31b 0.50d 0.3l, Ss	2
▲	36	1035044	(000000–)	Seal, Shaft, Drain Plug	1
▲	37	1039652	(000000–)	Seal, Plug, Drain, Nitrile	1
	38	9003893	(000000–002418)	Hinge Kit, Cover, Tank, Recvy, Replmt	2
	39	32491	(002419–)	Washer, Flat, 0.31, Std	6
	40	1038941	(000000–)	Bracket, Sppt, Tank, Rh	1
	41	1038927	(000000–)	Bracket, Sppt, Tank, Lh	1
	42	1037816	(002025–)	Bracket, Protector, Float Switch	1
	43	09007	(002025–)	Screw, Hex, M6 X 1.00 X 25, Ss	2
	44	08712	(002025–)	Nut, Hex, Lock, M6 X 1.00, Ss, Nl	2
	45	76426	(002025–)	Washer, Sealing, 0.28b 0.75d Ss, Neo	2
	46	1039072	(002419–)	Bracket, Sppt, Cover, Tank, Recvy	2
	47	1039049	(002419–)	Bracket, Mtg, Cover, Recvy Tank	2
	48	16735	(002419–)	Screw, Hex, M8 X 1.25 X 16, 8.8	6

Fig. 48 – Recovery Tank Drain Group

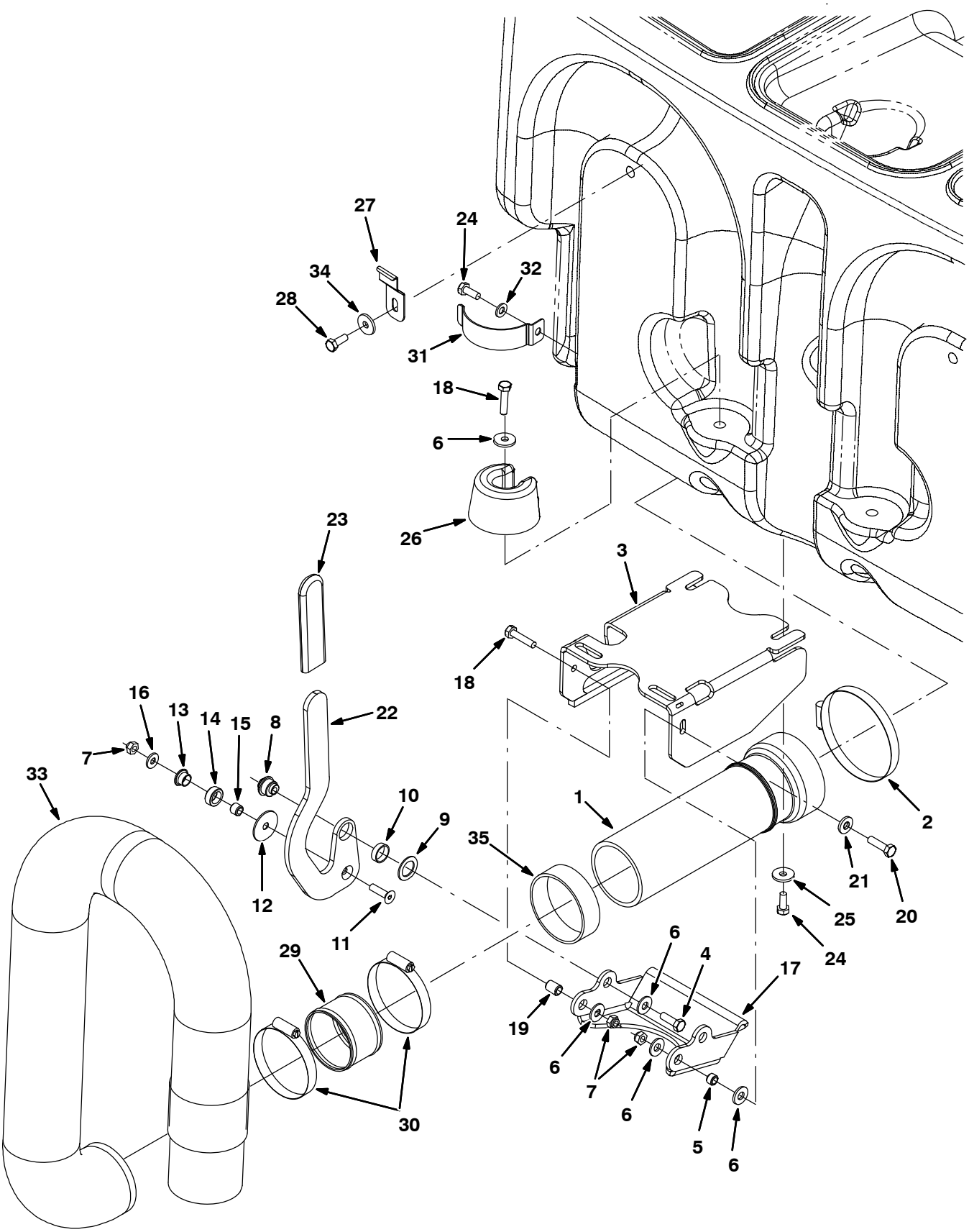

354450

Fig. 48 – Recovery Tank Drain Group

Ref.	Part No.	Serial Number	Description	Qty.
1	9003794	(000000–)	Tube Kit, Tank, Recvy, Replmt	1
2	23498	(000000–)	Clamp, Hose, Wormdrive, 3.56–4.50d, .50w	1
3	1042010	(000000–)	Mount Wldt, Valve, Pinch, Lh	1
4	39277	(000000–)	Screw, Hex, M8 X 1.25 X 25, 8.8	1
5	222516	(000000–)	Sleeve, P/M, 0.31b 0.50d 0.3l [430ss]	1
6	32491	(000000–)	Washer, Flat, 0.31, Std	5
7	08713	(000000–)	Nut, Hex, Lock, M8 X 1.25, Nl, Ss	3
8	1024599	(000000–)	Bushing, Eccentric, Adj	1
9	1026051	(000000–)	Washer, Flat, 0.79b 1.18d .06, Nyl	1
10	74090	(000000–)	Bushing, Sleeve, 0.75b 0.88d 0.25l	1
11	79506	(000000–)	Screw, Flt, M8 X 1.25 X 30, Ss	1
12	1028701	(000000–)	Washer, Thrust, 0.34b 1.50d .06	1
13	15648	(000000–)	Bushing, Flng, 0.50b 0.59d 0.38l	1
14	1028691	(000000–)	Roller, Brg	1
15	1028690	(000000–)	Tube, 0.50d 0.32b 00.4l, Ss	1
16	1017218	(000000–)	Washer, Flat, 0.32b 1.00d .12, Ss	1
17	1024535	(000000–)	Arm, Pinch	1
18	06955	(000000–)	Screw, Hex, M8 X 1.25 X 35, 8.8	2
19	80395	(000000–)	Sleeve, P/M, 0.31b 0.50d 0.7l [430ss]	1
20	76570	(000000–)	Screw, Hex, M8 X 1.25 X 30, 8.8	1
21	41186	(000000–)	Washer, Flat, Belleville, .31	1
22	1027039	(000000–)	Handle, Valve, Pinch, Lh	1
23	1023502	(000000–)	Grip, Handle	1
24	09740	(000000–)	Screw, Hex, M8 X 1.25 X 20, Ss	5
25	1017218	(000000–)	Washer, Flat, 0.32b 1.00d .12, Ss	2
26	1022137	(000000–)	Plug, Hose, Pyu	2
27	1025480	(000000–)	Bracket, Retaining, Hose	1
28	15675	(000000–)	Screw, Hex, M8 X 1.25 X 16, Ss	1
29	1041953	(000000–)	Tube, 2.90id 3.00od 02.4l, Ss	1
30	43555	(000000–)	Clamp, Hose, Wormdrive, 2.50–3.50d, .50w	2
31	1024558	(000000–)	Strap, Retaining, Hose	1
32	39349	(000000–)	Washer, Flat, 0.31 Sae	1
33	1019424	(000000–)	Hose, Drain, 3.00id X 48.0l	1
34	01685	(000000–)	Washer, Flat, 0.31, Ss	2
35	1031309	(000000–)	Tube, Acrylic, Hose, Pinch	1

Fig. 49 – Vacuum Fan Group, Scrubbing (000000–006877)

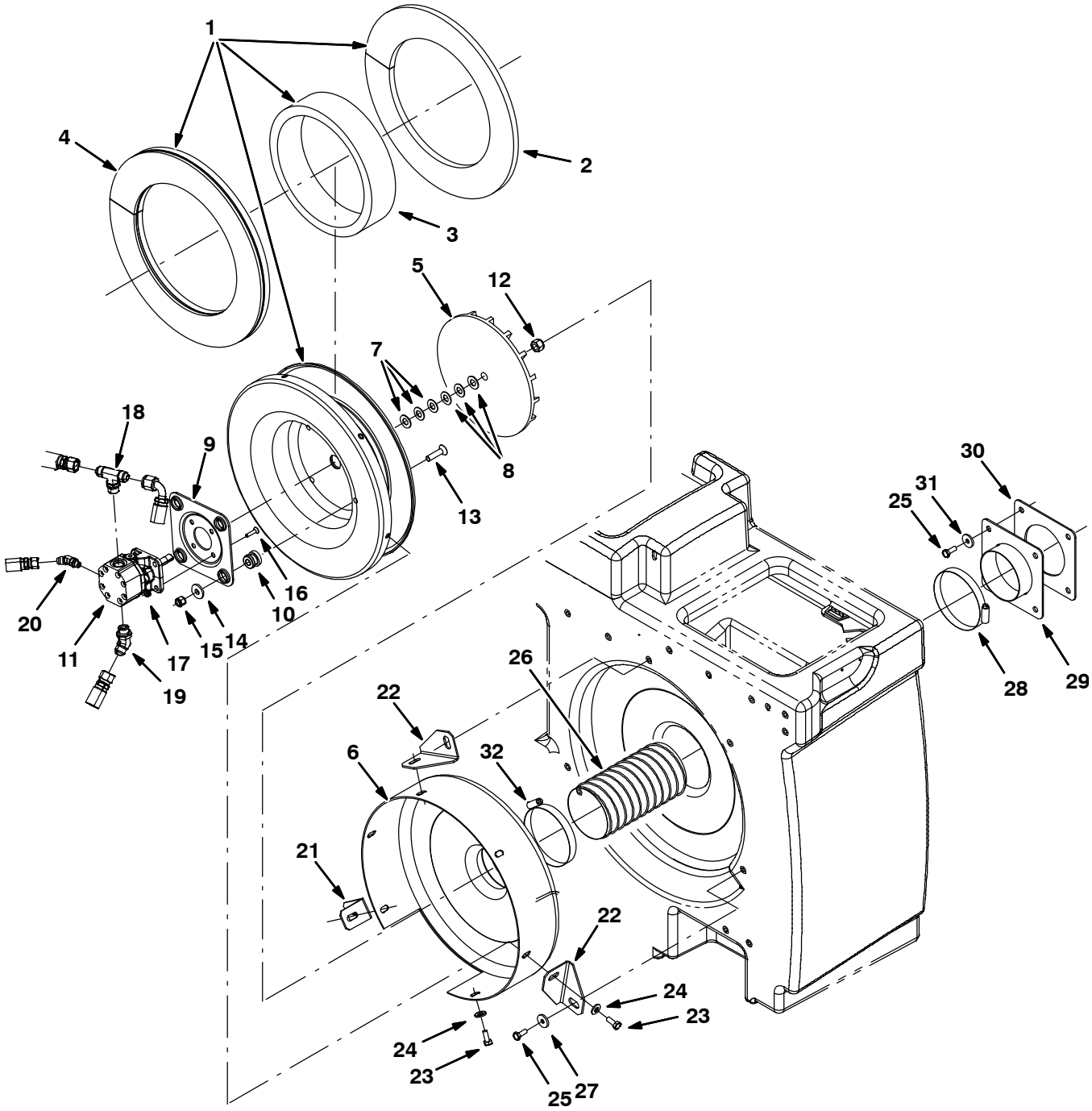

354451

Fig. 49 – Vacuum Fan Group, Scrubbing (000000–006877)

	Ref.	Part No.	Serial Number	Description	Qty.
▽		9003455	(000000–006877)	Fan Kit, Scrub, Replmt [M20/T20]	1
▲▽	1	9002684	(000000–006877)	Housing Assy, Vacfan, Scrbr	1
▲▲	2	1025888	(000000–006877)	Insulation, Flame–Retardant, 0.50	1
▲▲	3	1025887	(000000–006877)	Insulation, Flame–Retardant, 0.75–0.88	1
▲▲	4	1025872	(000000–006877)	Insulation, Flame–Retardant, 0.75–0.88	1
▲	5	1041815	(000000–006877)	Impeller, 9.5” Dia, 18 Blade (Machined)	1
▲	6	57189	(000000–006877)	Housing Wldt, Vacfan, Front [528]	1
▲	7	75456–3	(000000–006877)	Shim, Washer, 0.88d 0.51b .020	3
▲	8	75456–4	(000000–006877)	Shim, Washer, 0.88d 0.51b .060	3
▲	9	54275A	(000000–006877)	Bracket, Mtg, Motor	1
▲	10	54274	(000000–006877)	Isolator, Vib, Bshg, 1.1d 0.6l .4b 0.78h	4
▲▽	11	9003461	(000000–006877)	Motor Kit, Replmt [M20&T20]	1
▲▲		00954	(000000–006877)	Key, Sq, 0.12 X 0.12, 1.00l (Included With Motor)	1
▲▲		74233	(000000–006877)	Kit, Seal, Motor, Hyd, Gear[Barns]	1
▲▲	12	41130	(000000–006877)	Nut, Low Crown, .50–20	1
▲▲	13	54861	(000000–006877)	Screw, Flt, .38–16 X 1.50, Al	4
▲▲	14	1014563	(000000–006877)	Washer, Flat, 0.40b 1.12d .12, Ss	4
▲▲	15	36643	(000000–006877)	Nut, Hex, Lock, .38–16, Nl, Thin	4
▲▲	16	39534	(000000–006877)	Screw, Flt, .25–20 X 1.00, Al	4
▲▲	17	32981	(000000–006877)	Nut, Hex, Lock, .25–20, Nl	4
▲▲	18	49933	(000000–006877)	Fitting, Hyd, Tee, Jm08/Jm08/Om08, Br	1
▲▲	19	42226	(000000–006877)	Fitting, Hyd, E45, Jm08/Om08	1
▲▲	20	392609	(000000–006877)	Fitting, Hyd, E45, Jm06/Om04	1
▲	21	1020320	(000000–006877)	Angle, Sppt, Fan	1
▲	22	1024891	(000000–006877)	Bracket, Mtg, Fan	2
▲	23	16931	(000000–006877)	Screw, Hex, M8 X 1.25 X 20, 8.8	6
▲	24	41186	(000000–006877)	Washer, Flat, Belleville, .31	6
	25	09740	(000000–006877)	Screw, Hex, M8 X 1.25 X 20, Ss	7
	26	1022377	(000000–006877)	Hose, Air–Intk, Flex 4.00id 24.0l	1
	27	1014563	(000000–006877)	Washer, Flat, 0.40b 1.12d .12, Ss	3
	28	79380	(000000–006877)	Clamp, Hose, Wormdrive, 3.75–4.62d, .62w	1
	29	1023754	(000000–006877)	Plate Wldt, Hose, Vacuum	1
	30	1024853	(000000–006877)	Gasket, Plt, Hose, Vacuum	1
	31	1017218	(000000–006877)	Washer, Flat, 0.32b 1.00d .12, Ss	4
	32	23498	(000000–006877)	Clamp, Hose, Wormdrive, 3.56–4.50D, .50W	1

Fig. 50 – Vacuum Fan Group, Scrubbing (006878–)

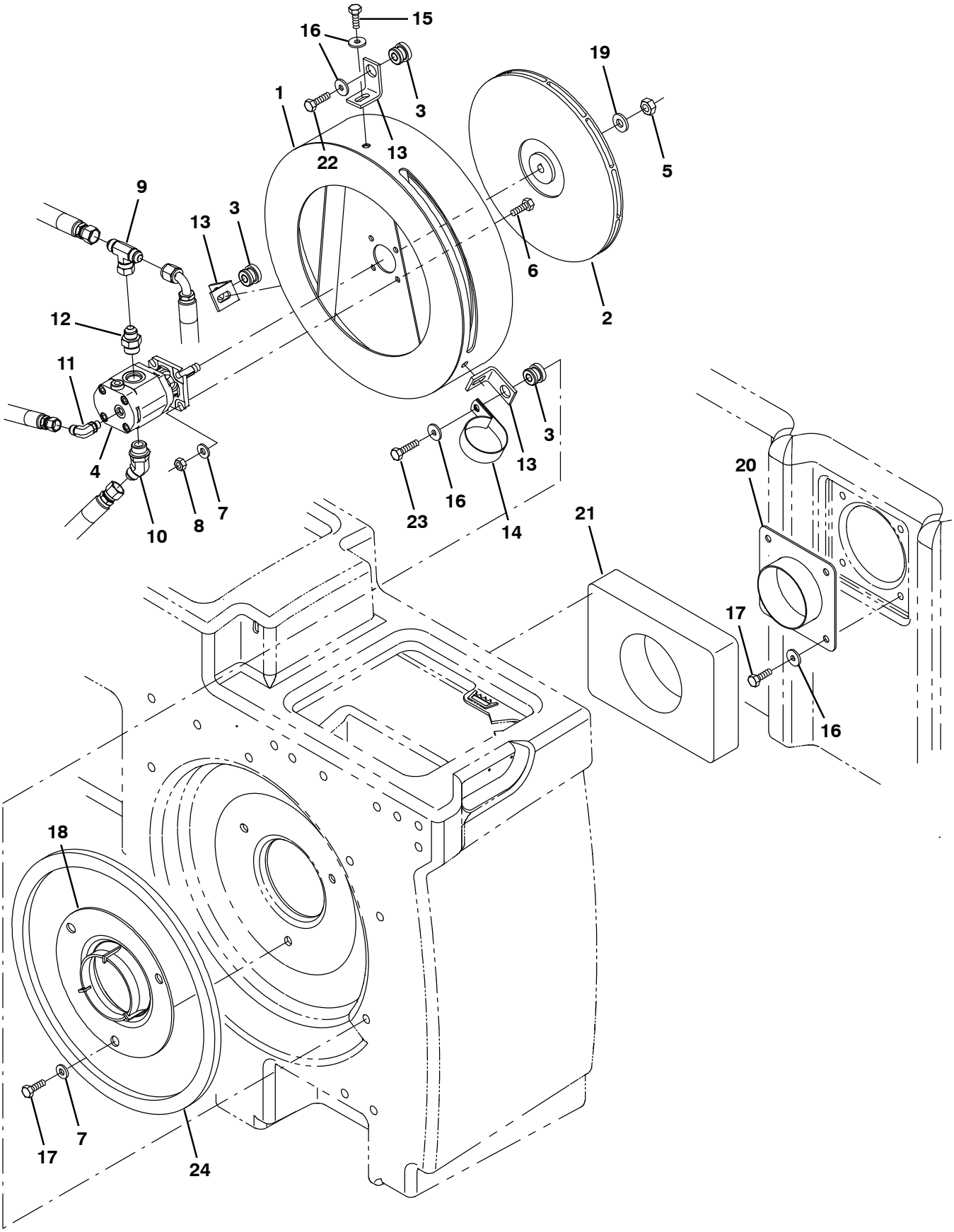

356555 – M20, NA

Fig. 50 – Vacuum Fan Group, Scrubbing (006878–)

Ref.	Part No.	Serial Number	Description	Qty.
1	1068611	(006878–)	Plate Wldt, Mtg, Fan	1
2	1062033	(006878–)	Impeller, 11.81d X 0.500b	1
3	54274	(006878–)	Isolator, Vib, Bshg, 1.1d 0.6l .4b 0.78h	3
4	1071253	(006878–)	Motor, Hyd, Gear, Ext 0.17 Lh 3000	1
5	07788	(006878–)	Nut, Hex, Std, M12 X 1.75, Ss	1
6	09010	(006878–)	Screw, Hex, M8 X 1.25 X 25, Ss	4
7	01685	(006878–)	Washer, Flat, 0.38b 0.88d .08, Ss	7
8	08713	(006878–)	Nut, Hex, Lock, M8 X 1.25, Nl, Ss	4
9	76315	(006878–)	Fitting, Hyd, Tee, Jf08/Jm08/Jm08, Br	1
10	47513	(006878–)	Fitting, Hyd, E45, Jm08/Om10	1
11	77098	(006878–)	Fitting, Hyd, E90, Jm06/Om04	1
12	56692	(006878–)	Fitting, Hyd, Str, Jm08/Om10	1
13	1068644	(006878–)	Angle, Sppt, Fan	3
14	70157	(006878–)	Clamp, Cable, Ss, 2.50d X 1.00w, 1hole	1
15	39277	(006878–)	Screw, Hex, M8 X 1.25 X 25, 8.8	3
16	1017218	(006878–)	Washer, Flat, 0.32b 1.00d .12, Ss	10
17	09740	(006878–)	Screw, Hex, M8 X 1.25 X 20, Ss	7
18	1059100	(006878–)	Housing, Fan, Radial Discharge, Sq Inlet	1
19	36328	(006878–)	Washer, Flat, Belleville, .50	1
20	1023754	(006878–)	Plate Wldt, Hose, Vacuum	1
21	1060716	(006878–)	Gasket, 2.00, 07.87w 10.24l, Adh	1
22	09011	(006878–)	Screw, Hex, M8 X 1.25 X 30, Ss	2
23	09023	(006878–)	Screw, Hex, M8 X 1.25 X 35, Fl, Ss	1
24	1068613	(006878–)	Gasket, Foam, .50, 14.76id 16.54od, Adh	1

Fig. 51 – Vacuum Fan Group, Sweeping

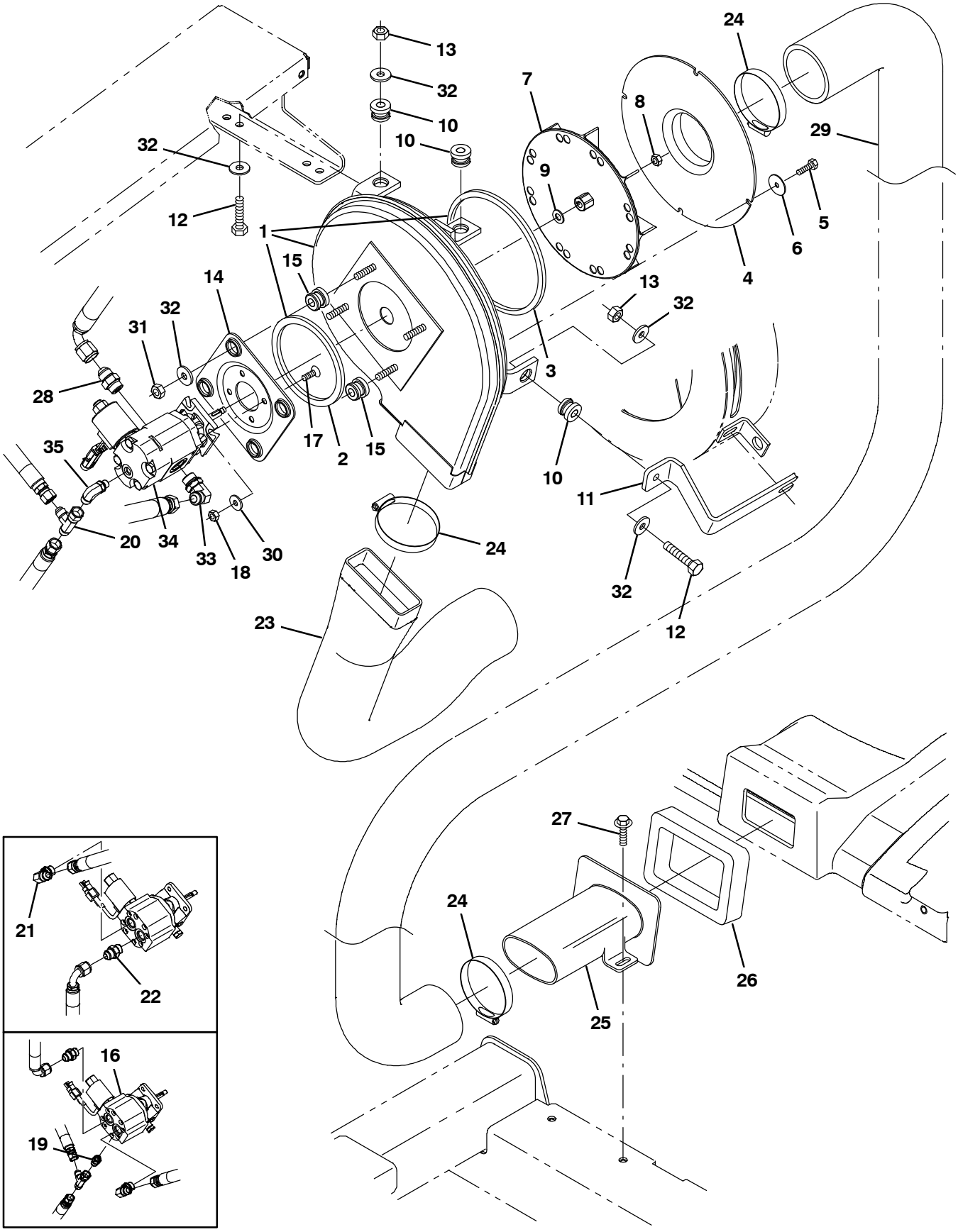

356558 – M20, D, NA

Fig. 51 – Vacuum Fan Group, Sweeping

	Ref.	Part No.	Serial Number	Description	Qty.
▽	1	9002683	(000000–)	Housing Assy, Vacfan, Swpr	1
▲	2	59967	(000000–)	Seal, Ure, 0.38 0.75w 13.2l Adh	1
▲	3	59735	(000000–)	Seal, Ure, 0.38 0.75w 33.0l Adh	1
	4	1018216	(000000–)	Fan Wldt, Vac, Inlet	1
	5	34323	(000000–)	Screw, Hex, .25–20 X 0.75, Nl	4
	6	41178	(000000–)	Washer, Flat, 0.25 Fender	4
	7	74454	(000000–)	Impeller, 9.00d X 1.40w X 0.376b	1
	8	31241	(000000–)	Nut, Hex, Lock, .31–24, Nl, Thin	1
	9	32485	(000000–)	Washer, Flat, 0.38 Sae	1
	10	59649	(000000–)	Isolator, Vib, Bshg, 1.1d 0.6l .4b 0.78h	3
	11	1034388	(000000–006877)	Bar, Isolator, Vacfan [M20 2007]	1
	11	1074010	(006878–)	Bar, Isolator, Vacfan [M20]	1
	12	39285	(000000–)	Screw, Hex, M10 X 1.5 X 40, 8.8	3
	13	41430	(000000–)	Nut, Hex, Lock, M10 X 1.5, Nl	3
	14	54275A	(000000–)	Bracket, Mtg, Motor	1
	15	54274	(000000–)	Isolator, Vib, Bshg, 1.1d 0.6l .4b 0.78h	4
	16	53485	(000000–006877)	Motor, Hyd, Gear, [Ex] .194 R 3000 (See Breakdowns)	1
	17	39534	(000000–)	Screw, Flt, Soc, .25–20 X 1.00, Al	4
	18	32981	(000000–)	Nut, Hex, Lock, .25–20, Nl	4
	19	50960	(000000–006877)	Fitting, Hyd, Str, Jm06/Om04	1
	20	42215	(000000–)	Fitting, Hyd, Tee, Jf06/Jm06/Jm06, Run	1
	21	44868	(000000–001337)	Fitting, Hyd, E90, Jm08/Om08	1
	22	44869	(000000–001337)	Fitting, Hyd, Str, Jm08/Om08	1
	23	1025756	(000000–)	Muffler, Vacfan, 4.0id	1
	24	23498	(000000–)	Clamp, Hose, Wormdrive, 3.56–4.50d, .50w	3
	25	1025841	(000000–)	Tube, Transition, Casting	1
	26	1018209	(000000–)	Gasket, Hppr, Transition	1
	27	1037346	(000000–)	Screw, Hex, M8 X 1.25 X 25, 9.8, Sems	2
	28	44869	(000000–)	Fitting, Hyd, Str, Jm08/Om08	1
	29	1018252	(000000–)	Hose, Flex, Vacuum, 3.5d 32.0l	1
	30	32483	(006878–)	Washer, Flat, 0.25, Sae	4
	31	36643	(000000–)	Nut, Hex, Lock, .38–16, Nl, Thin	4
	32	1014563	(000000–)	Washer, Flat, 0.40b 1.12d .12, Ss	10
	33	44868	(000000–)	Fitting, Hyd, E90, Jm08/Om08	1
	34	1071240	(006878–)	Motor, Hyd, Gear, Ext 0.17 Lh 3000	1
	35	77098	(006878–)	Fitting, Hyd, E90, Jm06/Om04	1

Fig. 52 – Hydraulic Schematic (000000–002699)

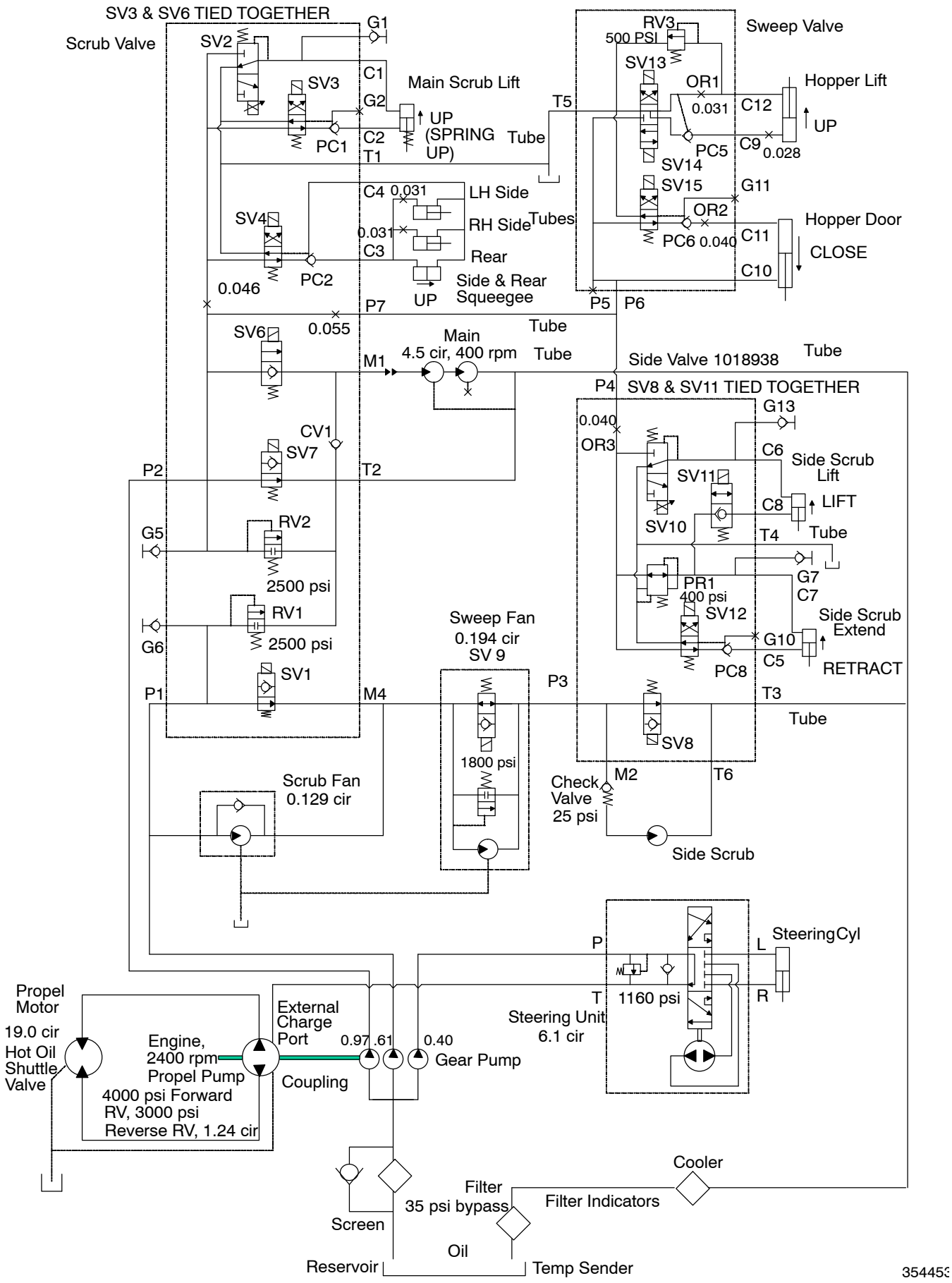

Fig. 53 – Hydraulic Schematic (002700–003297)

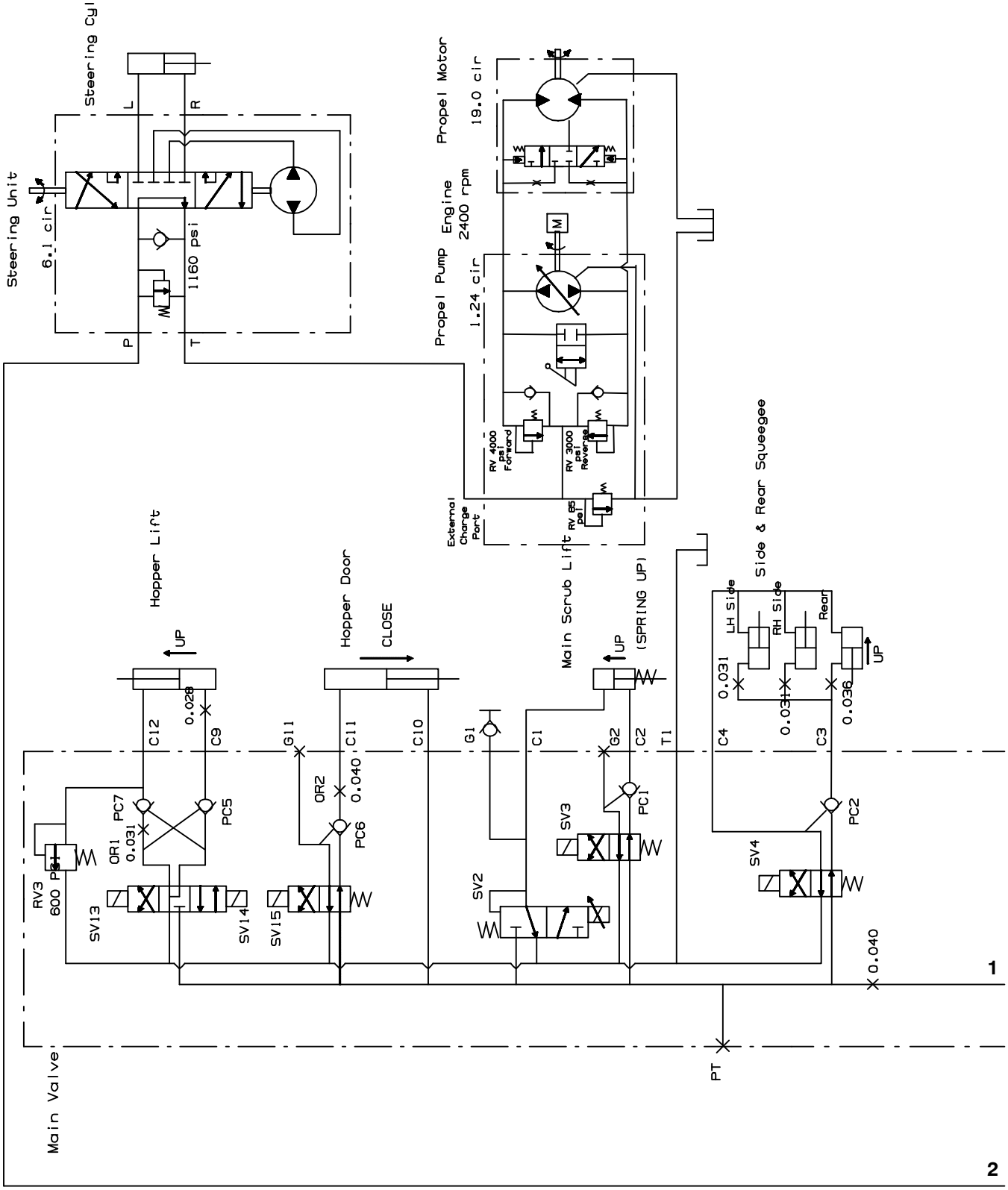

354453, 1018547 – M20

Fig. 53 – Hydraulic Schematic (002700–003297)

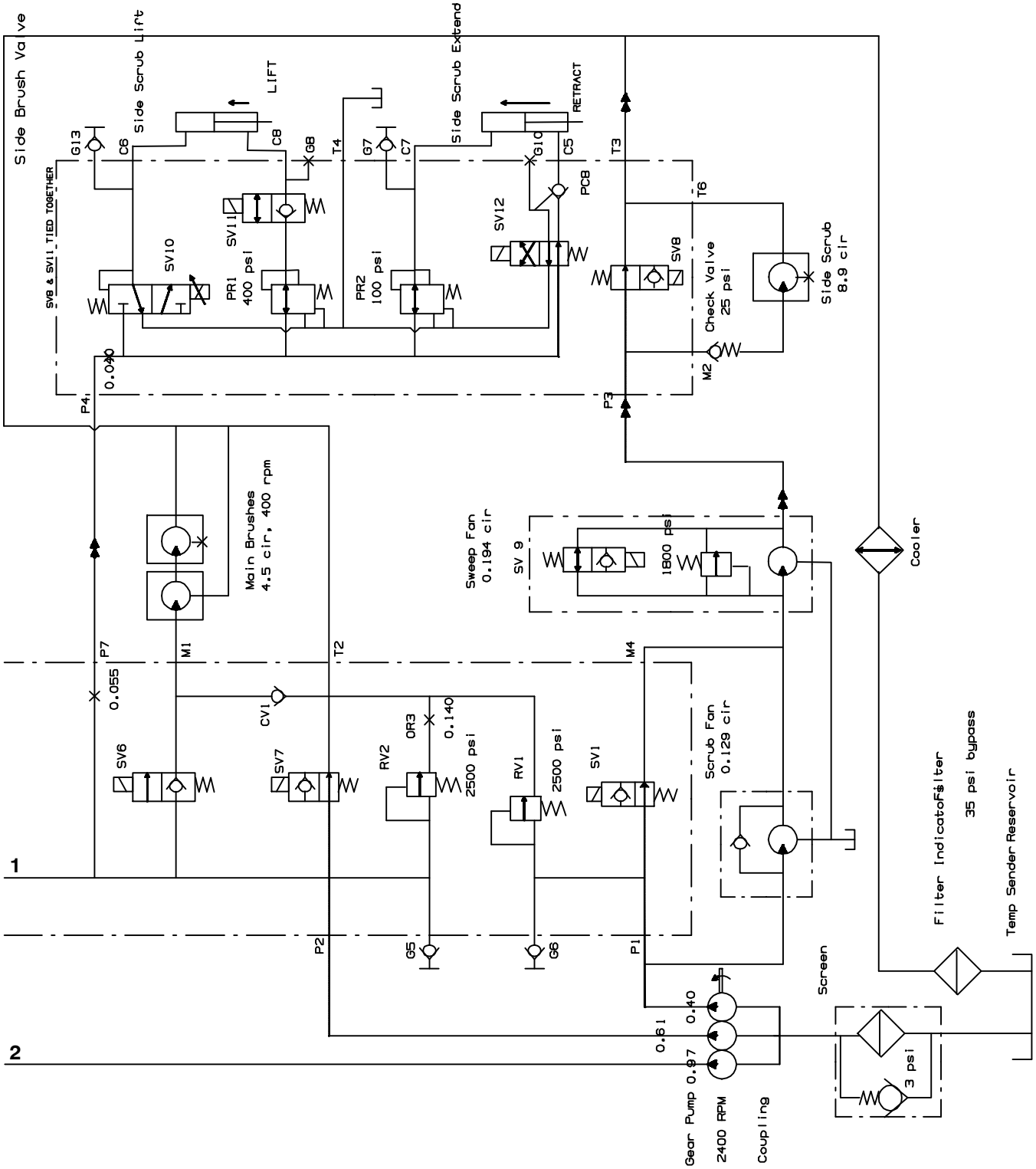

354453, 1018547 – M20

Fig. 54 – Hydraulic Schematic (003298–)

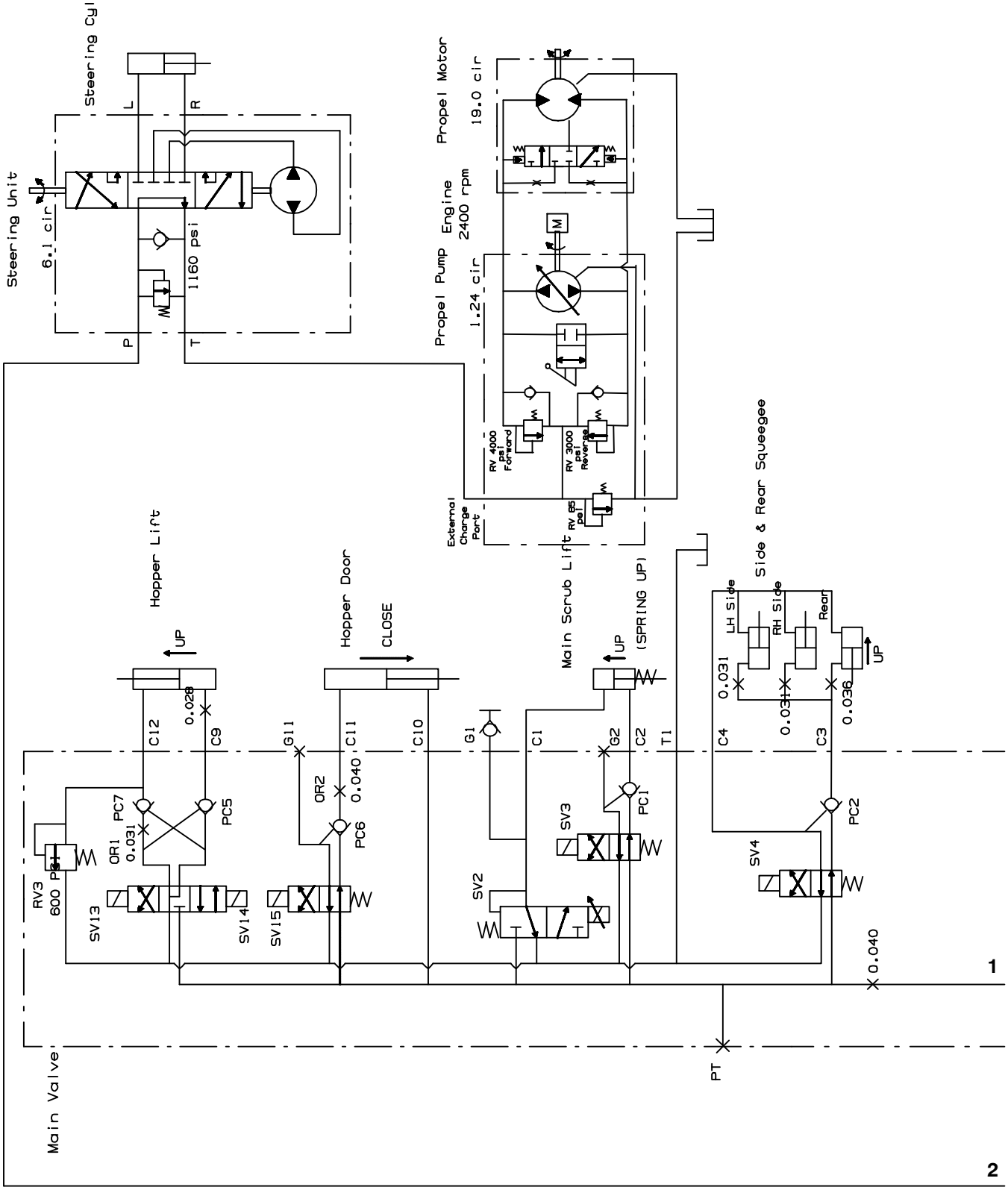

354453, 1018547 – M20

Fig. 54 – Hydraulic Schematic (003298–)

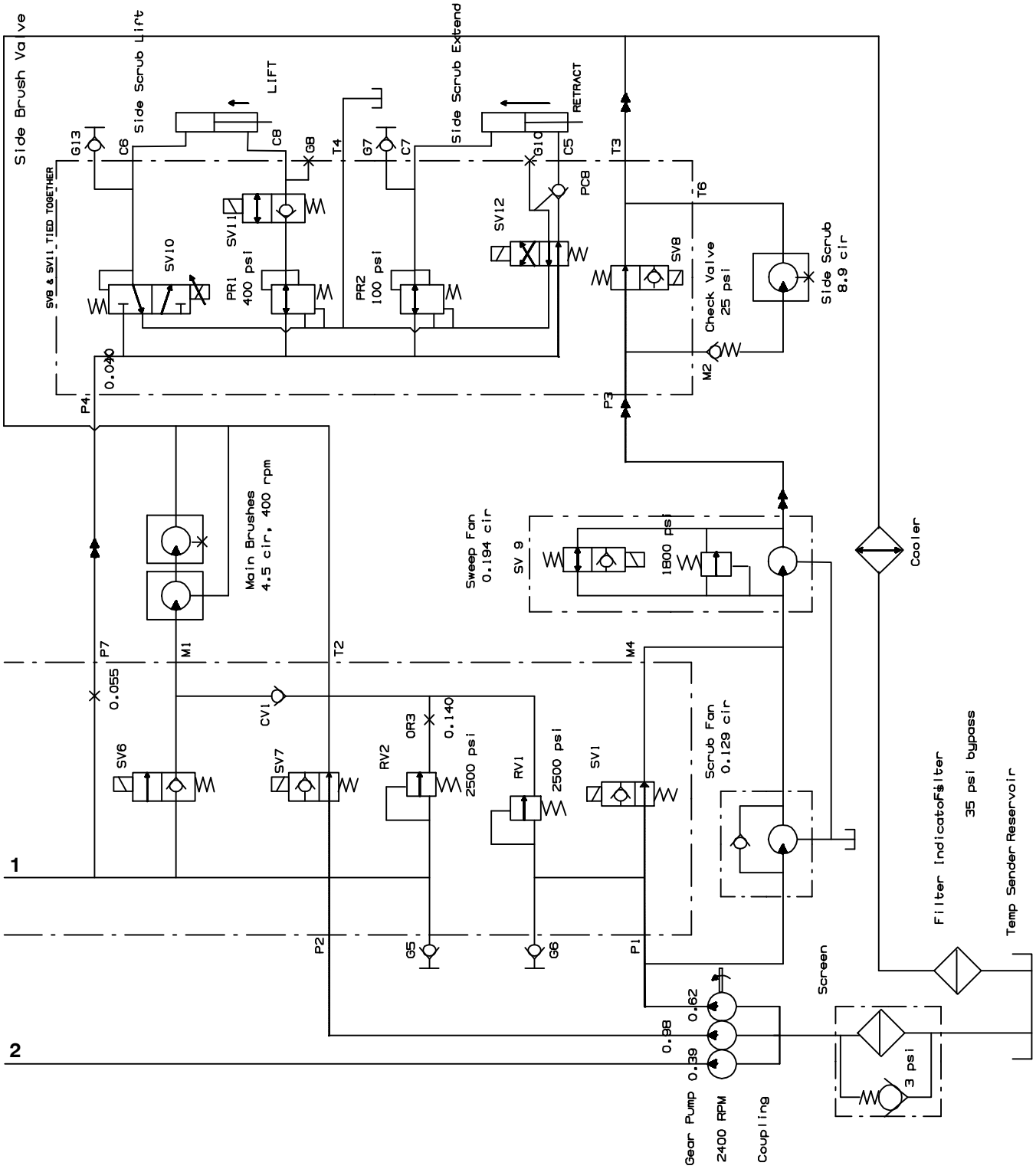

354453, 1018547 – M20

Fig. 55 – Hydraulic Hose Group, Steering and Propel

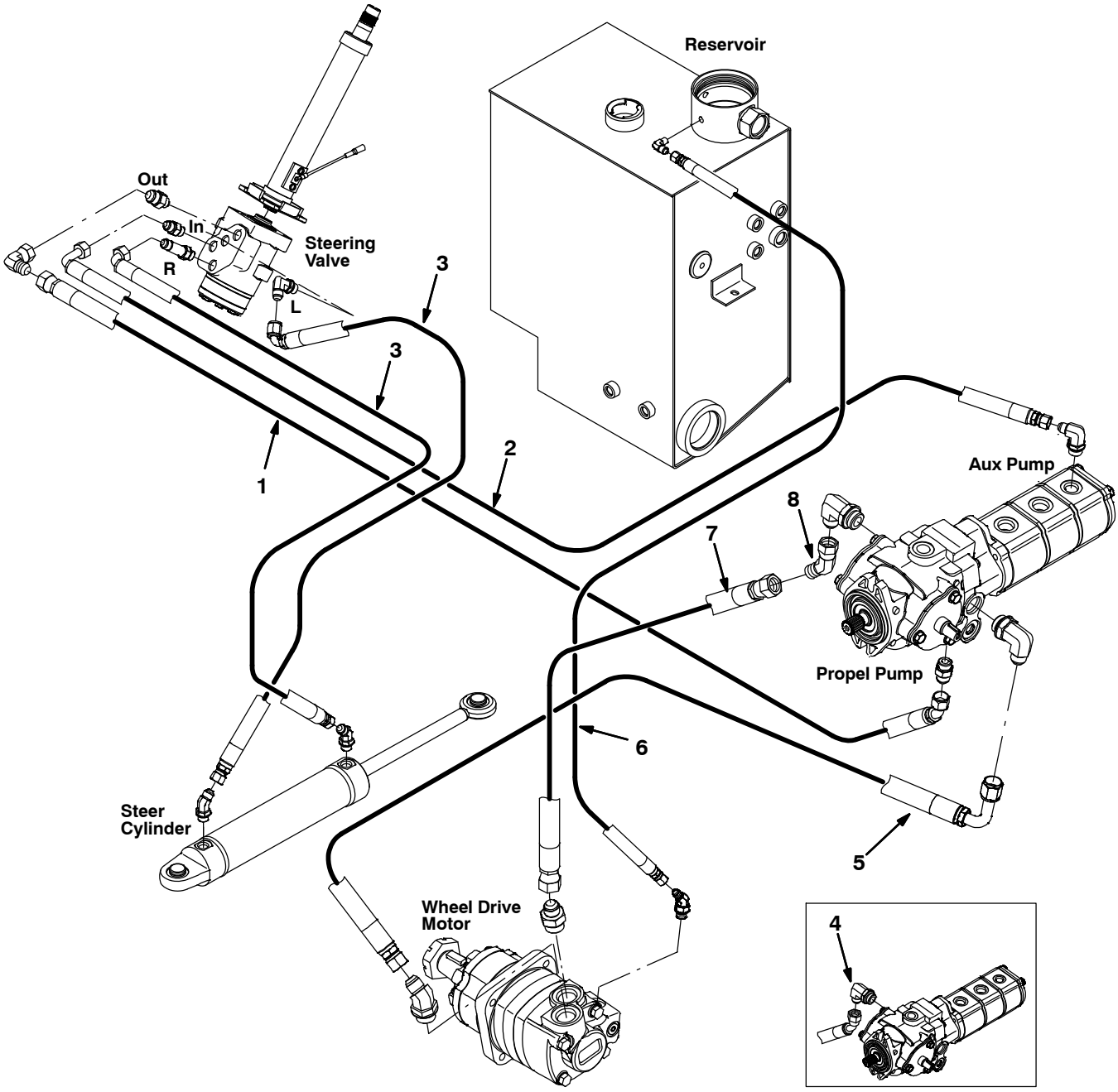

354392

Fig. 55 – Hydraulic Hose Group, Steering and Propel

Ref.	Part No.	Serial Number	Description	Qty.
1	1023609	(000000–)	Hose, Hyd, Tc08, Jf08e45/Jf08str, 96.0	1
2	1023608	(000000–)	Hose, Hyd, Tc06, Jf06e90/Jf06str, 104.0	1
3	396221	(000000–)	Hose, Hyd, Tc06, Jf06e90/Jf06str, 040.0	2
4	1039148	(000000–002183)	Hose Kit, Hyd, Propel, Ci [M20/T20]	1
5	1023488	(000000–)	Hose, Hyd, Spcl, Jf10e90/Jf10str, 63.0	1
6	1030404	(000000–)	Hose, Hyd,Med04, Jf04str/Jf04str, 066.0	1
7	1038569	(002184–)	Hose, Hyd, Spcl, Jf10str/Jf10str, 56.5	1
8	54017	(002184–)	Fitting, Hyd, E45, Jf10/Jm10	1

Fig. 56 – Hydraulic Hose Group, Pump and Vacuum Fans (000000–006877)

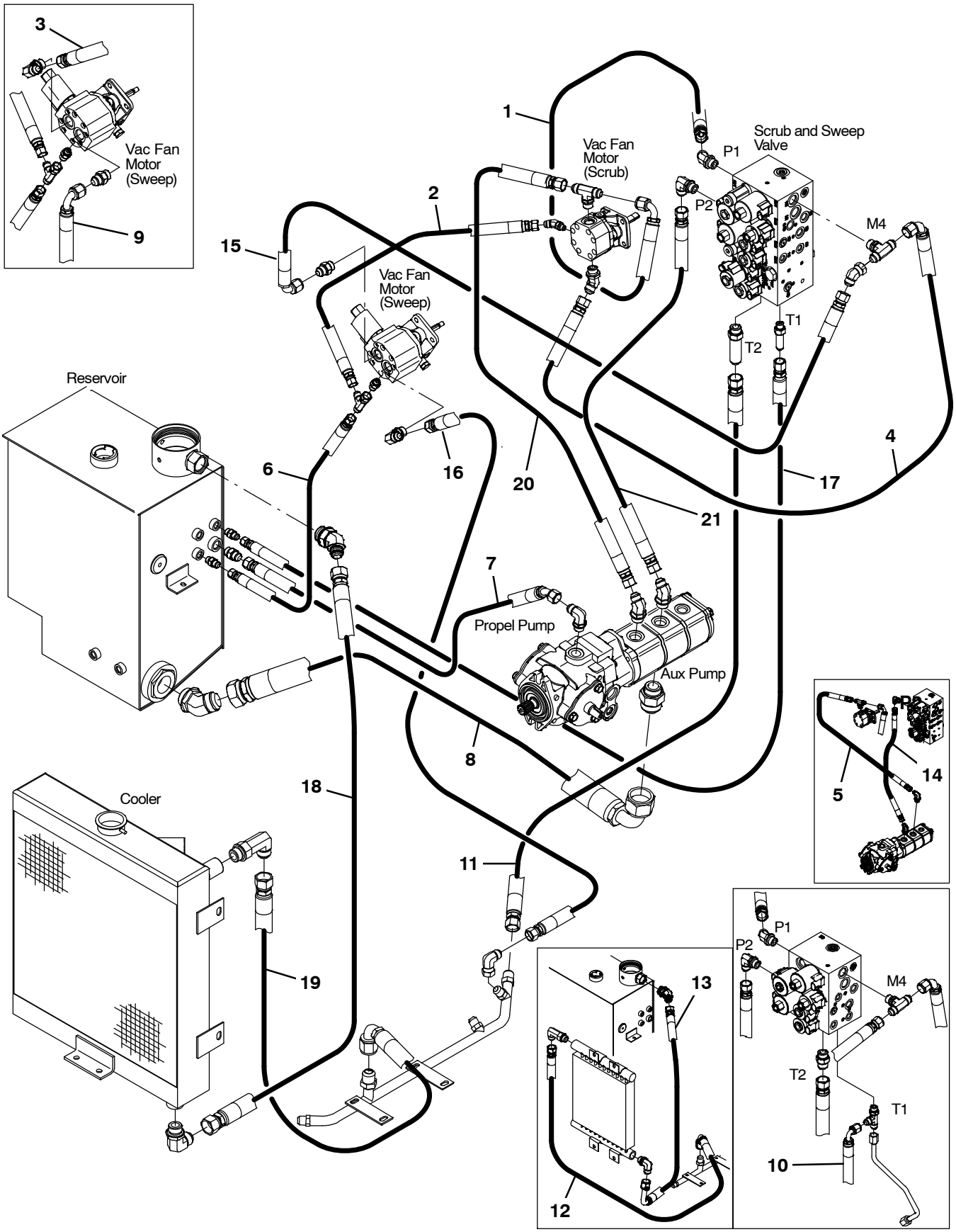

354397 – M20, D

Fig. 56 – Hydraulic Hose Group, Pump and Vacuum Fans (000000–006877)

Ref.	Part No.	Serial Number	Description	Qty.
1	71741	(000000–006877)	Hose, Hyd, Tc08, Jf08e90/Jf08str, 046.0	1
2	361044	(000000–006877)	Hose, Hyd, Med06, Jf06str/Jf06str, 018.0	1
3	381862	(000000–001337)	Hose, Hyd, Tc08, Jf08str/Jf08str, 024.0	1
4	396255	(000000–006877)	Hose, Hyd, Tc08, Jf08str/Jf08e90, 031.0	1
5	1026645	(000000–003297)	Hose, Hyd, Tc08, Jf08e45/Jf08str, 26.0	1
6	16431	(000000–006877)	Hose, Hyd, Med06, Jf06str/Jf06str, 022.0	1
7	1023607	(000000–006877)	Hose, Hyd, Med08, Jf08str /Jf08e45, 21.0	1
8	1036710	(000000–006877)	Hose, Hyd, Suc20, Jf20str /Jf20e90, 30.0	1
9	396266	(000000–001337)	Hose, Hyd, Med08, Jf08e90/Jf08str, 031.0	1
10	71735	(000000–002699)	Hose, Hyd, Med06, Jf06e90/Jf06str, 042.0	1
11	1025547	(000000–002699)	Hose, Hyd, Med10, Jf10str/Jf10str, 41.0	1
11	1040655	(002700–006877)	Hose, Hyd, Med10, Jf10Str/Jf10Str, 036.0	1
12	396438	(000000–003038)	Hose, Hyd, Tc12, Jf12e90/Jf12str, 044.0	1
13	1028145	(000000–003038)	Hose, Hyd,Med12, Jf12str/Jf12str , 66.0	1
14	1023606	(000000–003297)	Hose, Hyd, Tc08, Jf08str/Jf08str, 21.0	1
15	381858	(001338–002699)	Hose, Hyd, Tc08, Jf08e90/Jf08str, 024.0	1
15	1040216	(002700–006877)	Hose, Hyd, Tc08, Jf08E90/Jf08Str, 029.0	1
16	1036945	(001338–006877)	Hose, Hyd, Tc08, Jf08str/Jf08str, 031.0	1
17	71556	(002700–006877)	Hose, Hyd, Med06, Jf06Str/Jf06Str, 042.0	1
18	1052834	(003039–006877)	Hose, Hyd, Med12, Jf12str/Jf12str, 060.0	1
19	1050436	(003039–006877)	Hose, Hyd, Med12, Jf12e90/Jf12str, 029.0	1
20	1026645	(003298–006877)	Hose, Hyd, Tc08, Jf08E45/Jf08Str, 026.0	1
21	1023606	(003298–006877)	Hose, Hyd, Tc08, Jf08Str/Jf08Str, 021.0	1

Fig. 57 – Hydraulic Hose Group, Pump and Vacuum Fans (006878–)

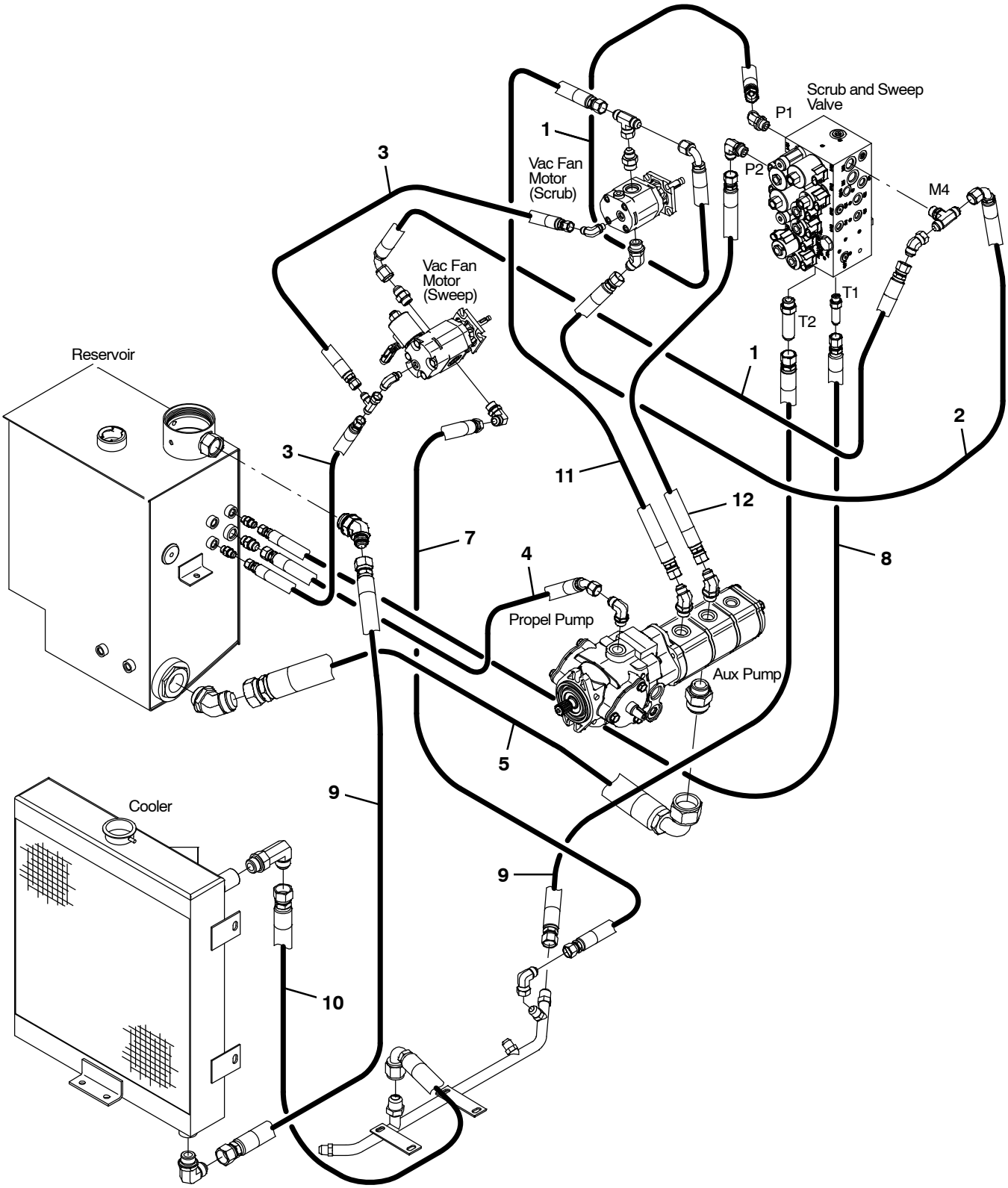

356559 – M20, D

Fig. 57 – Hydraulic Hose Group, Pump and Vacuum Fans (006878–)

Ref.	Part No.	Serial Number	Description	Qty.
1	71741	(006878–)	Hose, Hyd, Tc08, Jf08e90/Jf08str, 046.0	2
2	396255	(006878–)	Hose, Hyd, Tc08, Jf08str/Jf08e90, 031.0	1
3	16431	(006878–)	Hose, Hyd, Med06, Jf06str/Jf06str, 022.0	1
4	1023607	(006878–)	Hose, Hyd, Med08, Jf08str /Jf08e45, 21.0	1
5	1036710	(006878–)	Hose, Hyd, Suc20, Jf20str /Jf20e90, 30.0	1
6	1040655	(006878–)	Hose, Hyd, Med10, Jf10Str/Jf10Str, 036.0	1
7	1036945	(006878–)	Hose, Hyd, Tc08, Jf08str/Jf08str, 031.0	1
8	71556	(006878–)	Hose, Hyd, Med06, Jf06Str/Jf06Str, 042.0	1
9	1052834	(006878–)	Hose, Hyd, Med12, Jf12str/Jf12str, 060.0	1
10	1050436	(006878–)	Hose, Hyd, Med12, Jf12e90/Jf12str, 029.0	1
11	1026645	(006878–)	Hose, Hyd, Tc08, Jf08E45/Jf08Str, 026.0	1
12	1023606	(006878–)	Hose, Hyd, Tc08, Jf08Str/Jf08Str, 021.0	1

Fig. 58 – Hydraulic Hose Group, Brush and Hopper

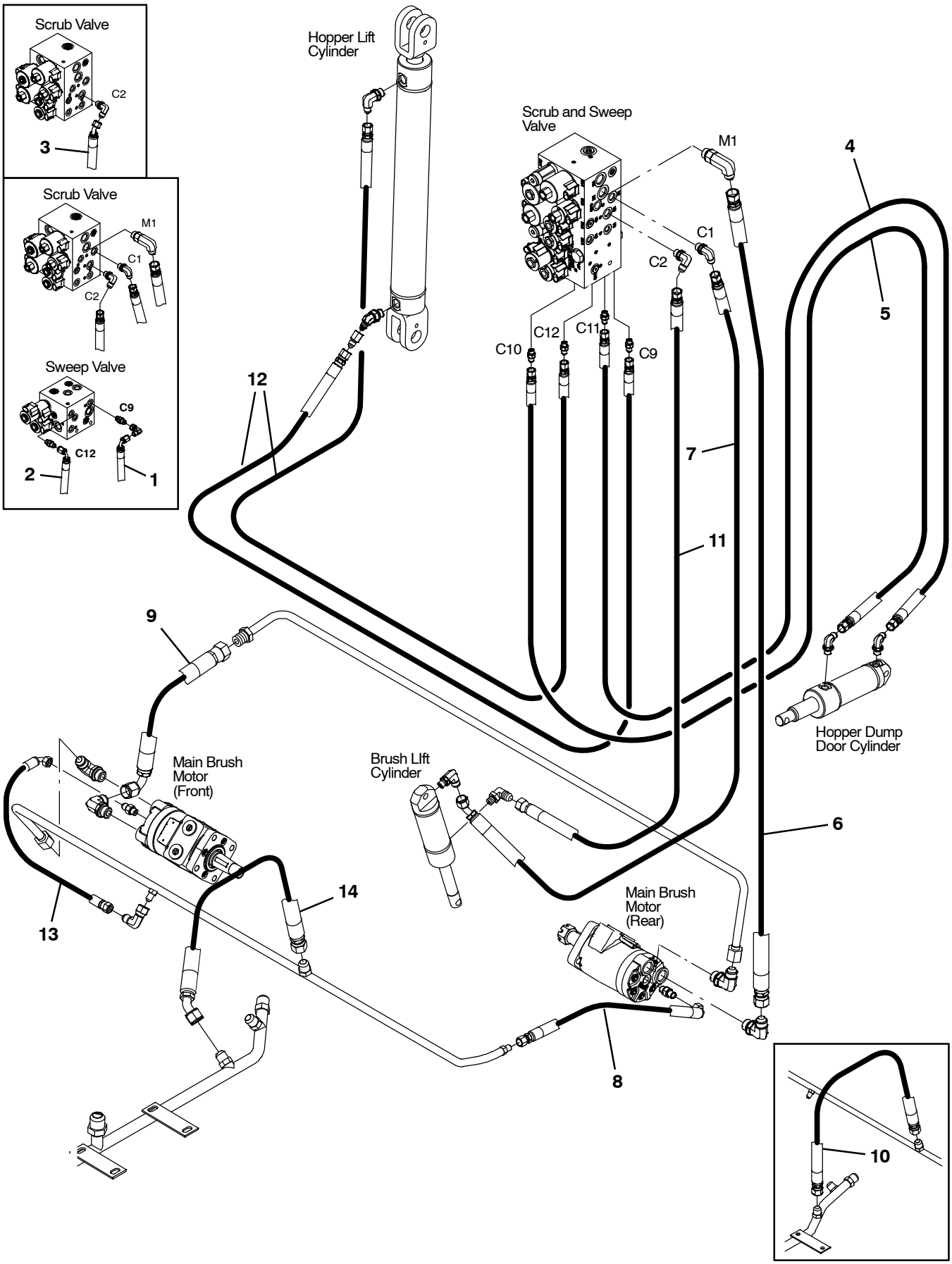

354390

Fig. 58 – Hydraulic Hose Group, Brush and Hopper

Ref.	Part No.	Serial Number	Description	Qty.
1	1027320	(000000–002699)	Hose, Hyd, Tc04, Jf04str /Jf04e90, 88.0	1
2	1027321	(000000–002699)	Hose, Hyd, Tc04, Jf04str /Jf04e90, 70.0	1
3	1025548	(000000–001337)	Hose, Hyd, Tc06, Jf06str /Jf06e45, 54.0	1
4	1026733	(000000–002699)	Hose, Hyd, Spcl, Jf04str/Jf04str, 115.0	1
4	1042775	(002700–)	Hose, Hyd, Spcl, Jf04str/Jf04str, 133.0	1
5	1024688	(000000–002699)	Hose, Hyd, Spcl, Jf04str/Jf04str, 121.0	1
5	1042776	(002700–)	Hose, Hyd, Spcl, Jf04str/Jf04str, 127.0	1
6	1024764	(000000–)	Hose, Hyd, Tc08, Jf08str/Jf08str, 48.0	1
7	1023769	(000000–)	Hose, Hyd, Tc 06, Jf06str /Jf06e45, 56.0	1
8	57946	(000000–)	Hose, Hyd, Med04, Jf04e90/Jf04str, 016.0	1
9	1025544	(000000–)	Hose, Hyd, Tc08, Jf08e90/Jf08str, 13.0	1
10	51754	(000000–005999)	Hose, Hyd, Med08, Jf08str/Jf08str, 022.0	1
11	1036939	(001338–)	Hose, Hyd, Tc06, Jf06str/Jf06str, 054.0	1
12	1040628	(002700–)	Hose, Hyd, Tc04, Jf04str/Jf04str, 096.0	2
13	387281	(003057–)	Hose, Hyd, Tc04, Jf04e90/Jf04str, 020.0	1
14	364978	(006000–006697)	Hose, Hyd, Med08, Jf08e45/Jf08str, 029.0	1
14	1041391	(006698–)	Hose, Hyd, Tc08, Jf08e45/Jf08str, 018.0	1

Fig. 59 – Hydraulic Hose Group, Squeegee Lift

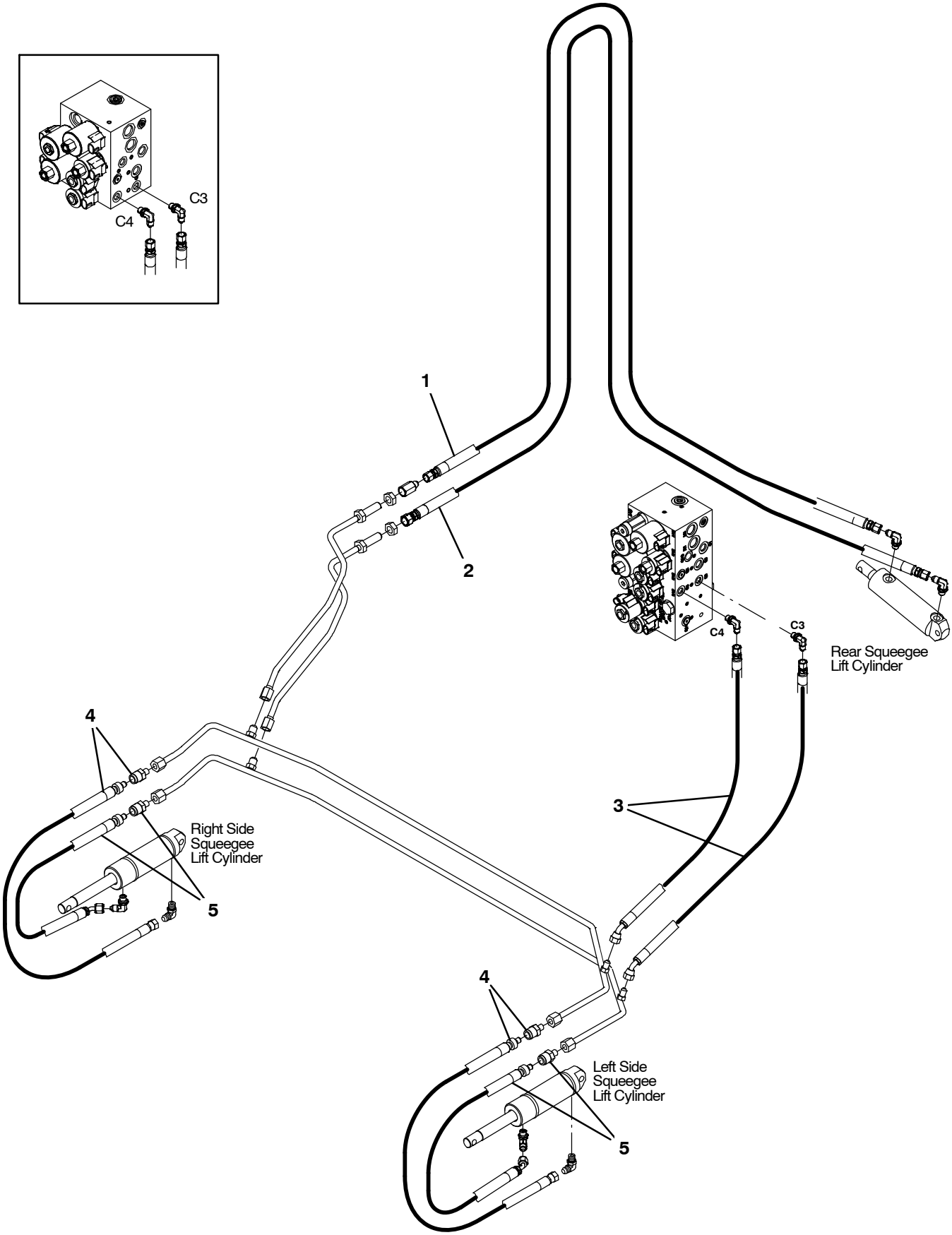

354391

Fig. 59 – Hydraulic Hose Group, Squeegee Lift

Ref.	Part No.	Serial Number	Description	Qty.
1	1024688	(000000–)	Hose, Hyd, Spcl, Jf04str/Jf04str, 121.0	1
2	1025551	(000000–)	Hose, Hyd, Spcl, Jf04str/Jf06str, 125.0	1
3	1030709	(000000–)	Hose, Hyd,Tc 04, Jf04str /Jf04e45 , 35.0	2
4	1037042	(000000–002555)	Hose, Hyd, Tc04, Jf04e45/Qm06, 028.0	2
4	1045759	(002556–)	Hose, Hyd, Tco4, Jf04Str/Qm06, 028.0	2
5	1037053	(000000–)	Hose, Hyd, Tc04, Jf04e45/Qm06, 026.0	2

Fig. 60 – Hydraulic Pumps Group

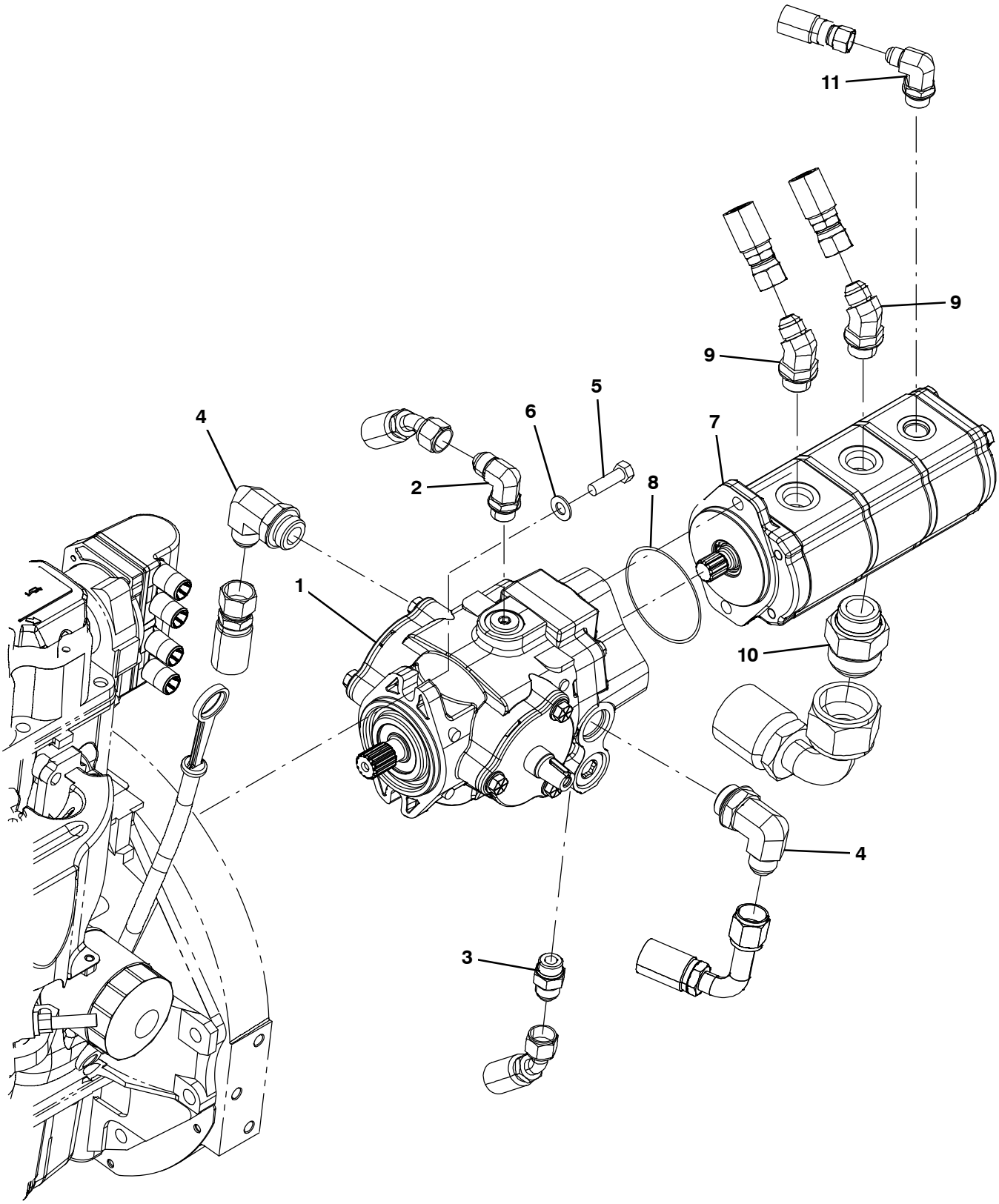

354454

Fig. 60 – Hydraulic Pumps Group

Ref.	Part No.	Serial Number	Description	Qty.
1	1024251	(000000–)	Pump, Hyd, Piston, Var, 1.24 4000, Cw (See Breakdowns)	1
2	44868	(000000–)	Fitting, Hyd, E90, Jm08/Om08	1
3	44869	(000000–)	Fitting, Hyd, Str, Jm08/Om08	1
4	53076	(000000–)	Fitting, Hyd, E90, Jm10/Om12	2
5	21198	(000000–)	Screw, Hex, .38–16 X 1.25, 5	2
6	32485	(000000–)	Washer, Flat, 0.38 Sae	2
7	9007142	(000000–)	Pump Kit, Mtg, Aux, Ci [M20 & T20]	1
8	65145–1	(000000–)	Seal, Org, .069 X 3.06id	1
9	47513	(000000–)	Fitting, Hyd, E45, Jm08/Om10	2
10	67811	(000000–)	Fitting, Hyd, Str, Jm20/Om16	1
11	47512	(000000–)	Fitting, Hyd, E90, Jm06/Om08	1

Fig. 61 – Hydraulic Cooler and Tubes Group

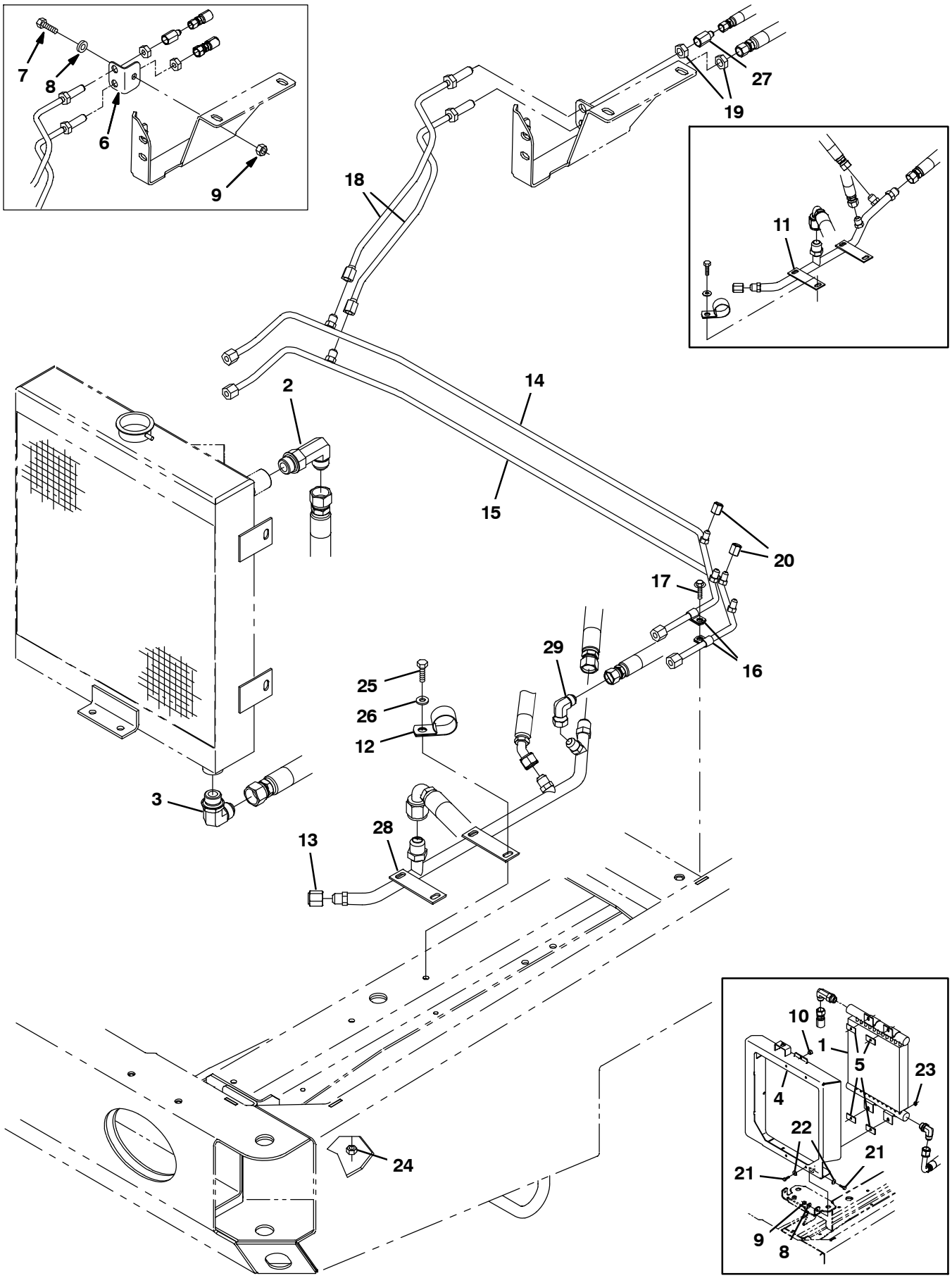

354455

Fig. 61 – Hydraulic Cooler and Tubes Group

Ref.	Part No.	Serial Number	Description	Qty.
1	13698	(000000–003038)	Cooler, Hyd, 25gpm 325btu Of12 13x12x2	1
2	46481	(000000–)	Fitting, Hyd, E90, Jm12/Om12	1
3	62471	(000000–)	Fitting, Hyd, E90, Jm12/Om12, L	1
4	1026319	(000000–003038)	Bracket Wldt, Cooler, Hyd Fluid	1
5	1040318	(000000–003038)	Pad, Tank, Hyd [W/Psa]	4
6	1026647	(000000–xxxxxx)	Angle, Mtg, Stl, .12 1.6 1.6 02.2l	1
7	39283	(000000–xxxxxx)	Screw, Hex, M10 X 1.5 X 25, 8.8	1
8	32492	(000000–xxxxxx)	Washer, Flat, 0.38 Std	1
9	41430	(000000–xxxxxx)	Nut, Hex, Lock, M10 X 1.5, Nl	1
10	51787	(000000–003038)	Bumper, Rbr, 0.6d 0.34t .3d Tip	1
11	1036959	(000000–005999)	Tube, Hyd, Main Return	1
12	53466	(000000–)	Clamp, Cable, Stl, 1.50d X 1.00w, 1h	1
13	60090	(000000–)	Fitting, Hyd, Cap, Jf08	1
14	1028821	(000000–)	Tube, Hyd, Sqge	1
15	1028822	(000000–)	Tube, Hyd, Sqge	1
16	40678	(000000–)	Clamp, Cable, Stl, 0.44d X 0.62w, 1h	2
17	74455	(000000–)	Screw, Hex, M6 X 1.0 X 12, Fmg	1
18	1028823	(000000–)	Tube, Hyd, Rear Sqge [M20]	2
19	35904	(000000–)	Nut, Ftg, Hyd, 0.56–18	2
20	50161	(000000–)	Fitting, Hyd, Cap, Jf04	2
21	39277	(000000–003038)	Screw, Hex, M8 X 1.25 X 25, 8.8	8
22	32491	(000000–003038)	Washer, Flat, 0.31, Std	8
23	07791	(000000–003038)	Nut, Hex, Flng, M8 X 1.25	8
24	41430	(000000–)	Nut, Hex, Lock, M10 X 1.5, Nl	2
25	39277	(000000–)	Screw, Hex, M8 X 1.25 X 25, 8.8	2
26	32491	(000000–)	Washer, Flat, 0.31, Std	2
27	47752	(000000–)	Fitting, Hyd, Str, Jf06/Jm04	1
28	1071173	(006000–)	Tube, Hyd, Main Return [G/Lp Mit2013]	1
29	17980	(006000–)	Fitting, Hyd, E90, Jf08/Jm08	1

Fig. 62 – Hydraulic Reservoir Group

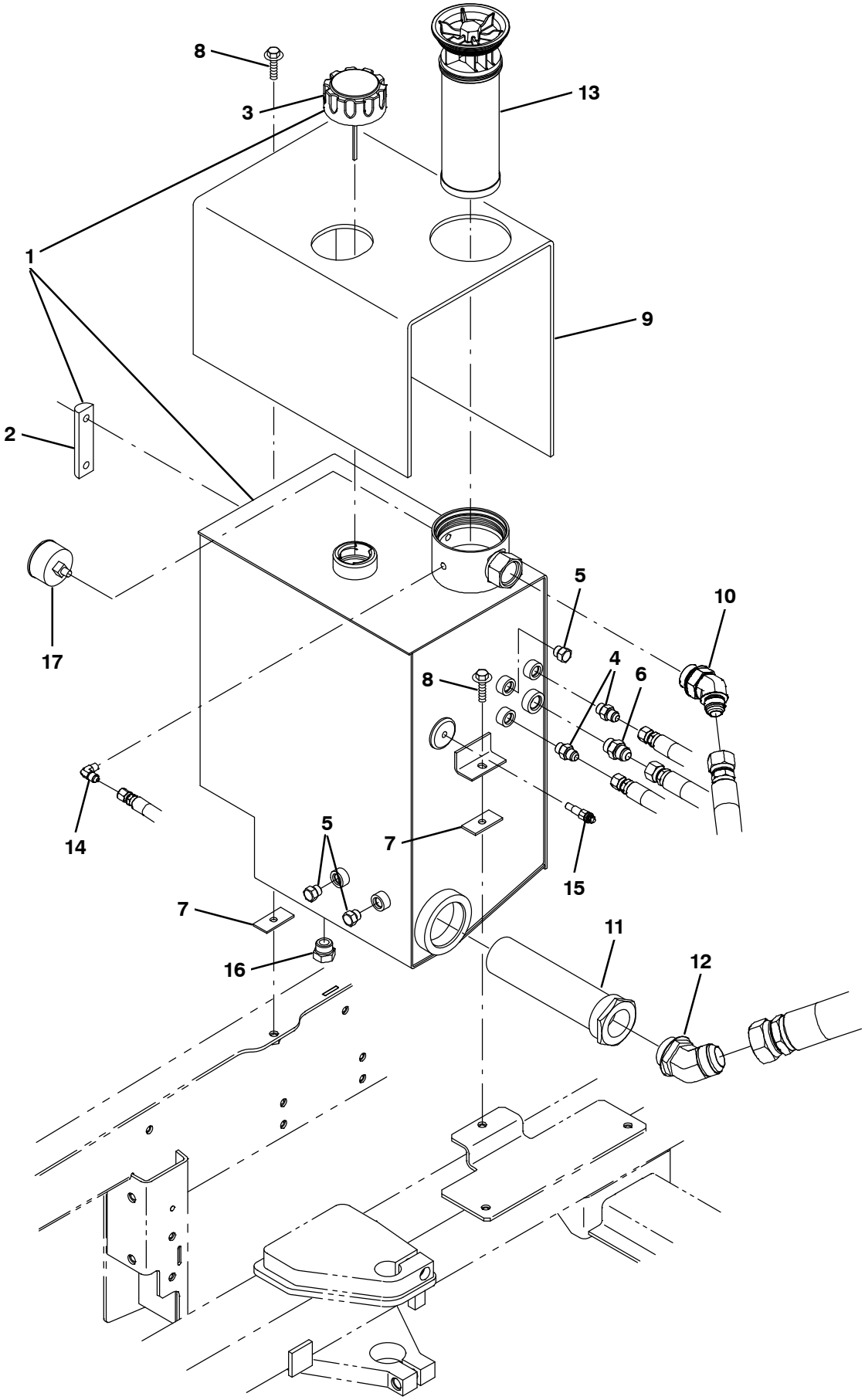

354456 – NA

Fig. 62 – Hydraulic Reservoir Group

	Ref.	Part No.	Serial Number	Description	Qty.
▽	1	9002398	(000000–)	Reservoir, Hyd, 10.0Gal, Replmt	1
▲	2	65215	(000000–)	Gauge, Sensing, Level	1
▲	3	25122	(000000–)	Cap, Breather, Hyd, 2.4 Ds	1
	4	56690	(000000–)	Fitting, Hyd, Str, Jm06/Om06	2
	5	46482	(000000–)	Fitting, Hyd, Plug, Om06	3
	6	44869	(000000–)	Fitting, Hyd, Str, Jm08/Om08	1
	7	1040318	(000000–)	Pad, Tank, Hyd [W/Psa]	2
	8	1037354	(000000–)	Screw, Hex, M8 X 1.25 X 30, 9.8, Sems	2
	9	1034878	(000000–)	Insulation, Thermal, Hydraulic Blanket	1
	10	1023545	(000000–)	Fitting, Hyd, E45, Jm12/Om16	1
	11	31613	(000000–)	Strainer, Hyd, 25gpm 100mesh Psi	1
	12	71726	(000000–)	Fitting, Hyd, E45, Jm20/Om20	1
	13	1021579	(000000–)	Filter Assy, Hyd, 10mic	1
	14	55455	(000000–)	Fitting, Hyd, E90, Jm04/Pm02	1
	15	58592	(000000–)	Send–Unit, Water, Temp, 04npt 113oh/195d	1
	16	40362	(000000–)	Fitting, Hyd, Plug, Om10	1
	17	1025132	(000000–)	Indicator, Press, 60psi	1

Fig. 63 – Hydraulic Valves Group (000000–002699)

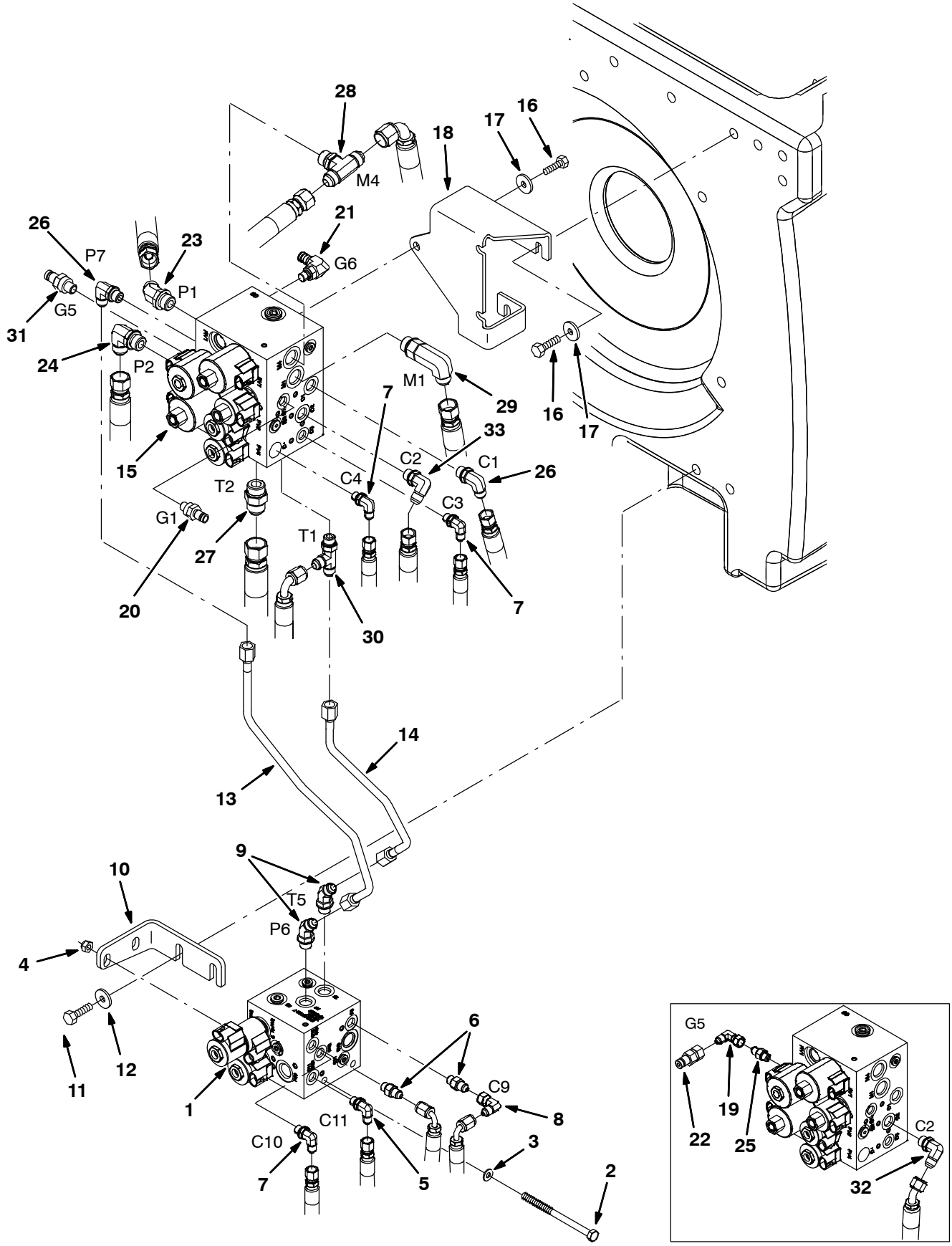

354457

Fig. 63 – Hydraulic Valves Group (000000–002699)

Ref.	Part No.	Serial Number	Description	Qty.
1	1018936	(000000–002699)	Valve, Cntrl, Hyd [M20] (See Breakdowns)	1
2	49883	(000000–002699)	Screw, Hex, M8 X 1.25 X 120, 8.8, Fl	2
3	32491	(000000–002699)	Washer, Flat, 0.31, Std	2
4	08709	(000000–002699)	Nut, Hex, Lock, M8 X 1.25, Nl	2
5	77097	(000000–002699)	Fitting, Hyd, E90, Jm04/Om04	2
6	55586	(000000–002699)	Fitting, Hyd, Str, Jm04/Om04	2
7	77097	(000000–002699)	Fitting, Hyd, E90, Jm04/Om04	2
8	39210	(000000–002699)	Fitting, Hyd, E90, Jf04/Jm04	1
9	47522	(000000–002699)	Fitting, Hyd, E45, Jm06/Om06	2
10	1020708	(000000–002699)	Bracket, Mtg, Valve, Hyd, Swp	1
11	09740	(000000–002699)	Screw, Hex, M8 X 1.25 X 20, Ss	2
12	1017218	(000000–002699)	Washer, Flat, 0.32b 1.00d .12, Ss	2
13	1022482	(000000–002699)	Tube, Hyd, Swp	1
14	1022484	(000000–002699)	Tube, Hyd, Swp	1
15	1020394	(000000–002699)	Valve, Cntrl, Hyd (See Breakdowns)	1
16	09740	(000000–002699)	Screw, Hex, M8 X 1.25 X 20, Ss	6
17	1017218	(000000–002699)	Washer, Flat, 0.32b 1.00d .12, Ss	6
18	1021991	(000000–002699)	Bracket, Mtg, Valve, Hyd, Scb	1
19	39210	(000000–001271)	Fitting, Hyd, E90, Jf04/Jm04	1
20	395973	(000000–002699)	Fitting, Hyd, Str, Om04/Qm04	1
21	395974	(000000–002699)	Fitting, Hyd, E90, Om04/Qm04	1
22	396476	(000000–001271)	Fitting, Hyd, Str, Jf04/Qm04	1
23	42226	(000000–002699)	Fitting, Hyd, E45, Jm08/Om08	1
24	44868	(000000–002699)	Fitting, Hyd, E90, Jm08/Om08	1
25	55586	(000000–001271)	Fitting, Hyd, Str, Jm04/Om04	1
26	56820	(000000–002699)	Fitting, Hyd, E90, Jm06/Om06	2
27	46480	(000000–002699)	Fitting, Hyd, Str, Jm10/Om10	1
28	49933	(000000–002699)	Fitting, Hyd, Tee, Jm08/Jm08/Om08, Br	1
29	69173	(000000–002699)	Fitting, Hyd, E90, Jm08/Om08, L	1
30	76316	(000000–002699)	Fitting, Hyd, Tee, Jm06/Jm06/Om06, Run	1
31	395973	(001272–026999)	Fitting, Hyd, Str, Om04/Qm04	1
32	56820	(000000–001337)	Fitting, Hyd, E90, Jm06/Om06	1
33	71727	(001338–026999)	Fitting, Hyd, E90, Jm06/Om06, L	1

Fig. 64 – Hydraulic Valve Group (002700–)

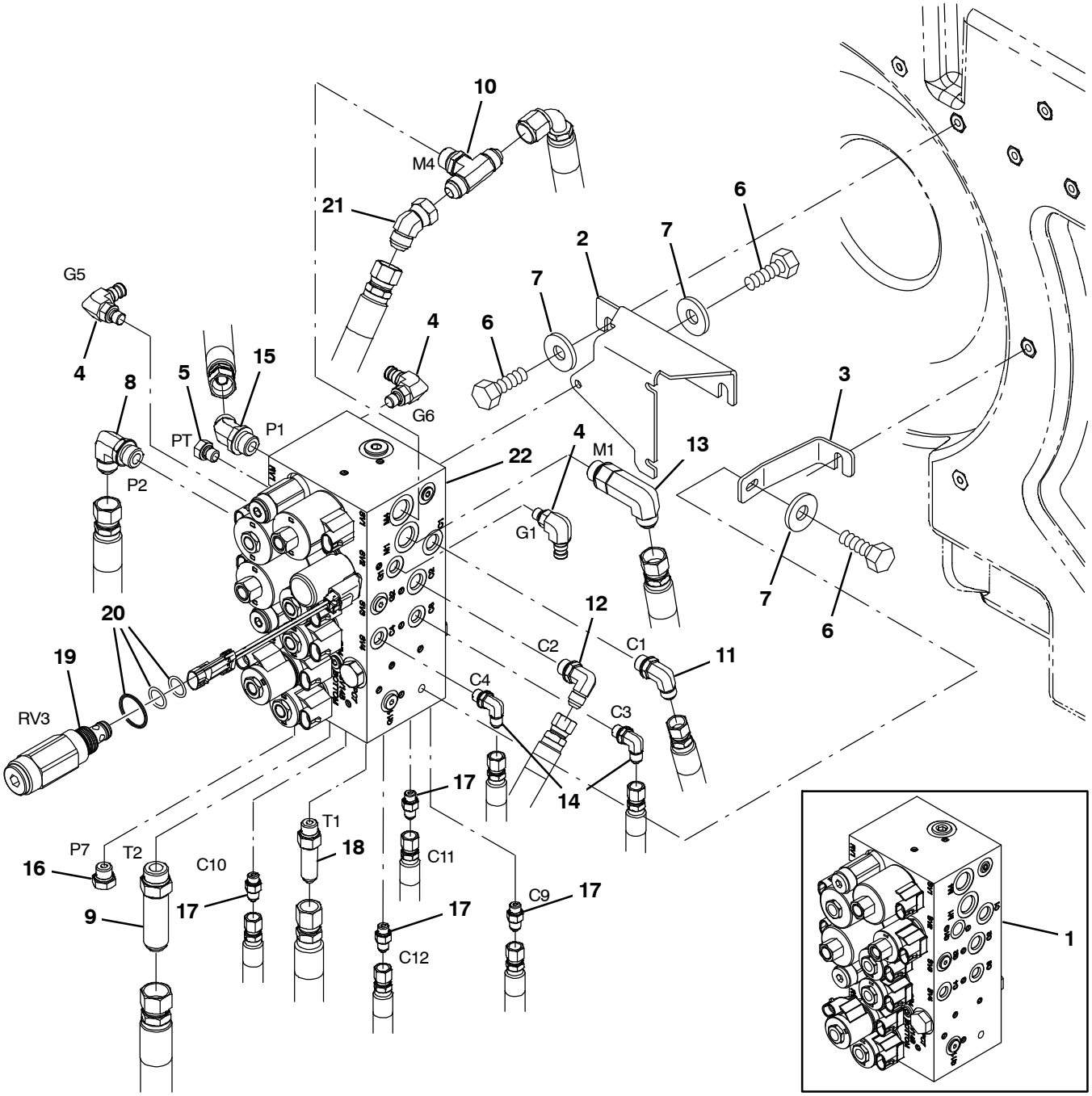

354816

Fig. 64 – Hydraulic Valve Group (002700–)

Ref.	Part No.	Serial Number	Description	Qty.
1	1038566	(002700–006286)	Valve, Hyd, Solenoid, 12vdc (See Breakdowns)	1
2	1039789	(002700–)	Bracket, Mtg, Valve [Combined]	1
3	1040117	(002700–)	Bracket, Mtg, Valve, Lower	1
4	395974	(002700–)	Fitting, Hyd, E90, Om04/Qm04	3
5	33812	(002700–)	Fitting, Hyd, Plug, Om04	1
6	09740	(002700–)	Screw, Hex, M8 X 1.25 X 20, Ss	8
7	1017218	(002700–)	Washer, Flat, 0.32b 1.00d .12, Ss	8
8	69173	(002700–)	Fitting, Hyd, E90, Jm08/Om08, Long	1
9	1040876	(002700–)	Fitting, Hyd, Str, Jm10/Om10, Long	1
10	49933	(002700–)	Fitting, Hyd, Tee, Jm08/Jm08/Om08, Br	1
11	56820	(002700–)	Fitting, Hyd, E90, Jm06/Om06	1
12	71727	(002700–)	Fitting, Hyd, E90, Jm06/Om06, Long	1
13	69173	(002700–)	Fitting, Hyd, E90, Jm08/Om08, Long	1
14	77097	(002700–)	Fitting, Hyd, E90, Jm04/Om04	2
15	42226	(002700–)	Fitting, Hyd, E45, Jm08/Om08	1
16	46482	(002700–)	Fitting, Hyd, Plug, Om06	1
17	55586	(002700–)	Fitting, Hyd, Str, Jm04/Om04	4
18	59577	(002700–)	Fitting, Hyd, Str, Jm06/Om06, Long	1
19	1044367	(002700–)	Valve, Relief, 0600Psi	1
20	373647	(002700–)	Seal Kit, Cartridge	1
21	07797	(006000–)	Fitting, Hyd, E45, Jf08/Jm08	1
22	1072995	(006287–)	Valve, Cntrl, Hyd, Solenoid, 12vdc 10gpm (See Breakdowns)	1

Fig. 65 – Electrical Schematic (000000–002532)

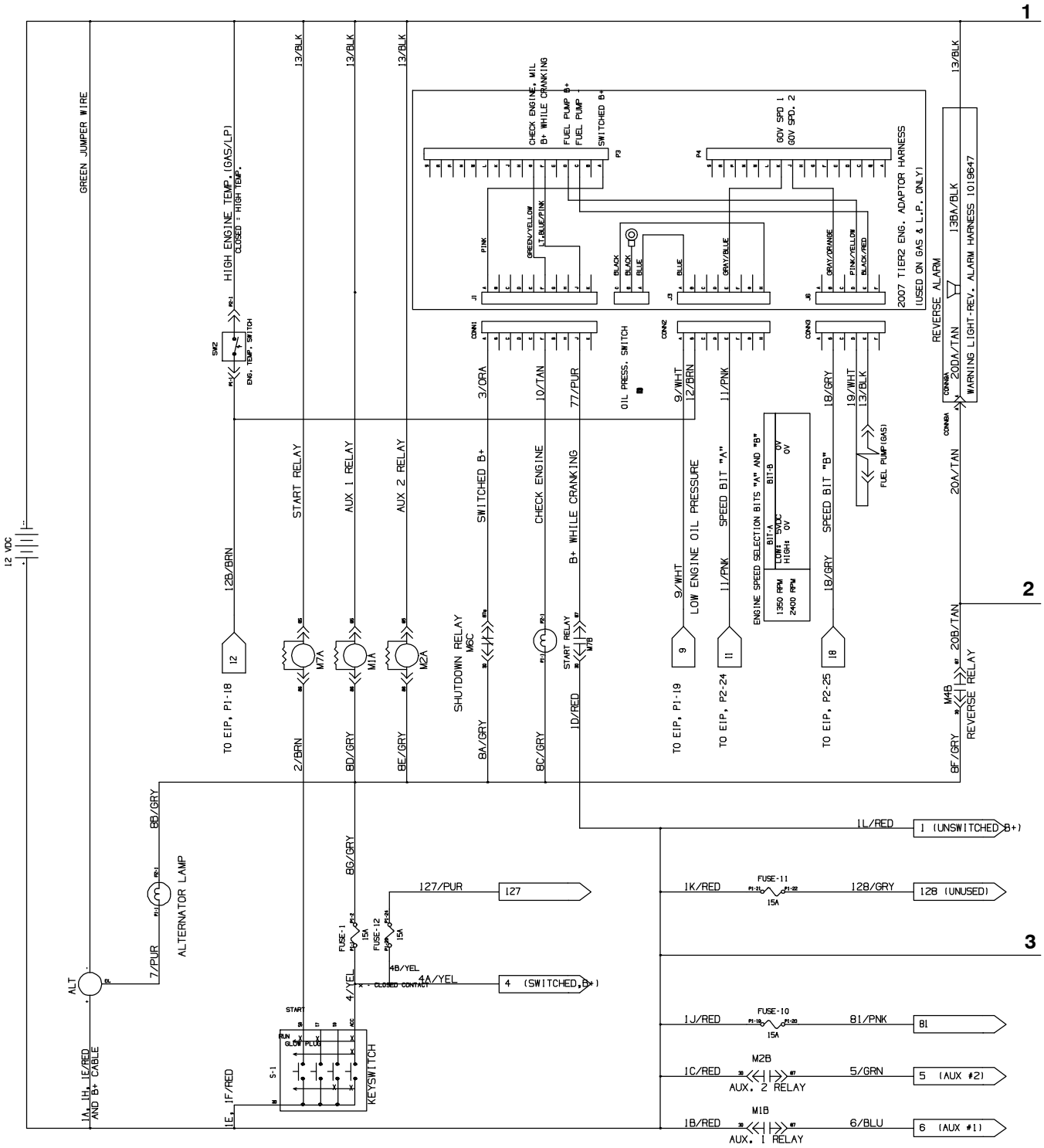

1018547 – 354458

Fig. 65 – Electrical Schematic (000000–002532)

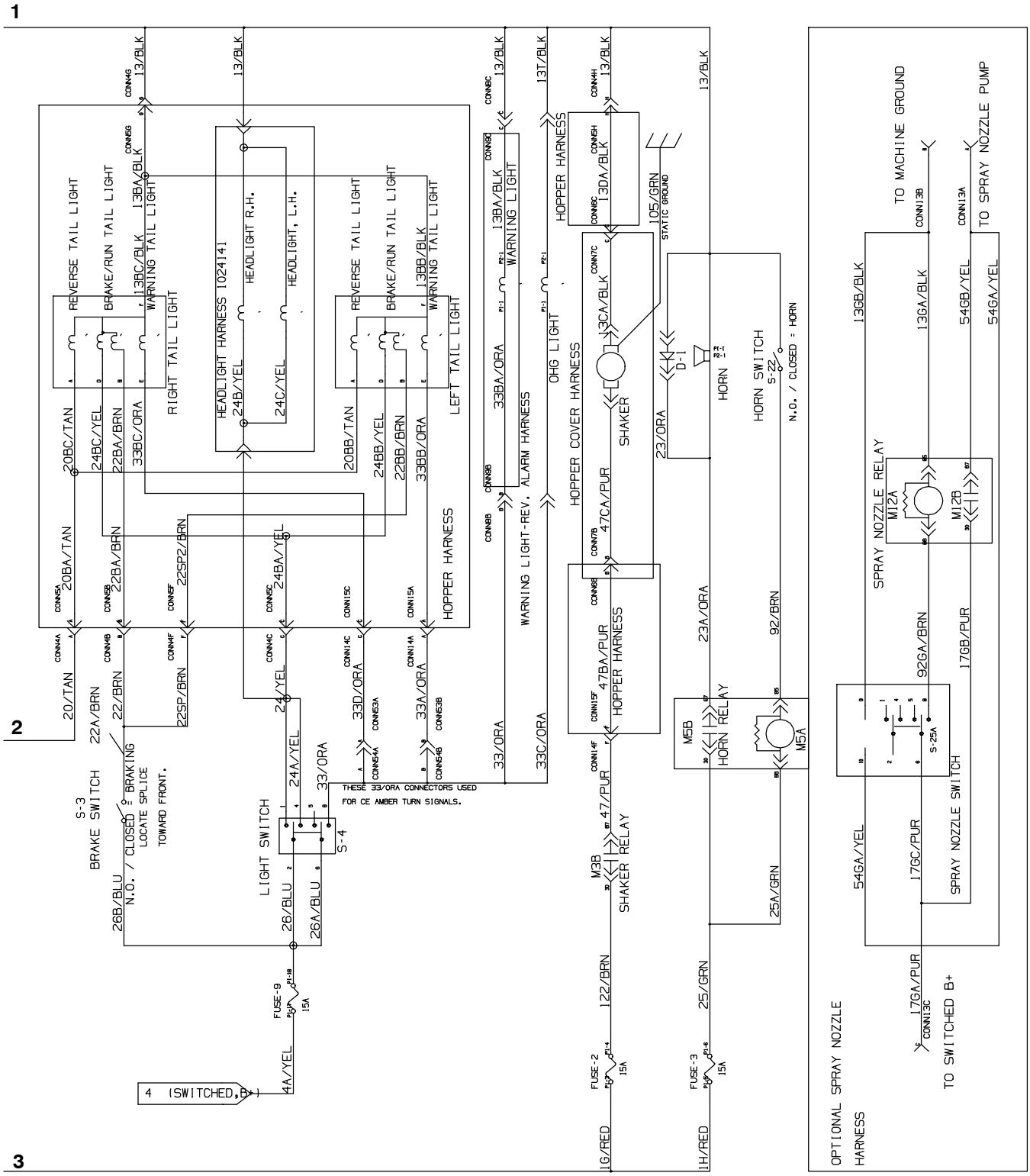

1018547

Fig. 65 – Electrical Schematic (000000–002532)

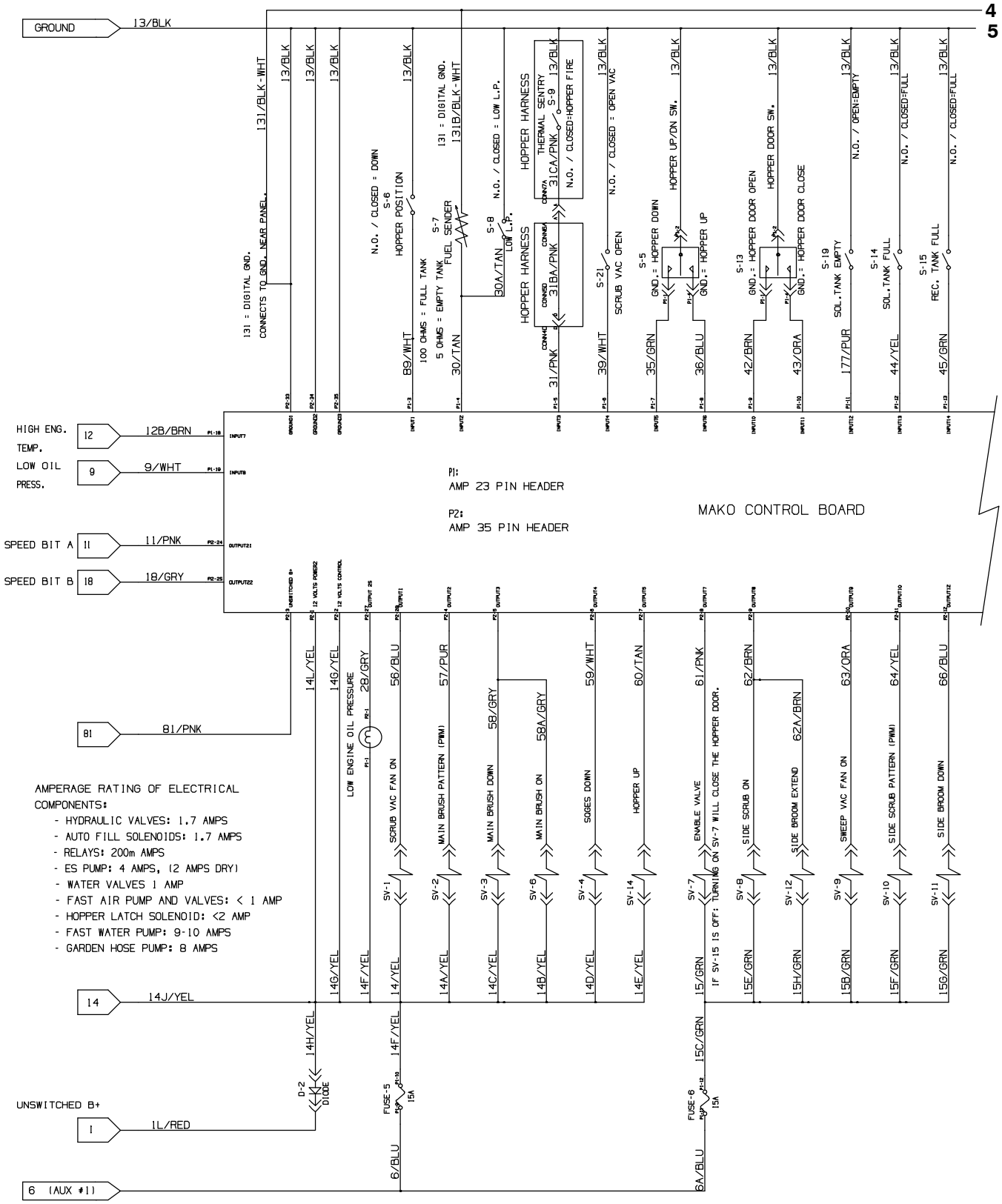

1018547

Fig. 65 – Electrical Schematic (000000–002532)

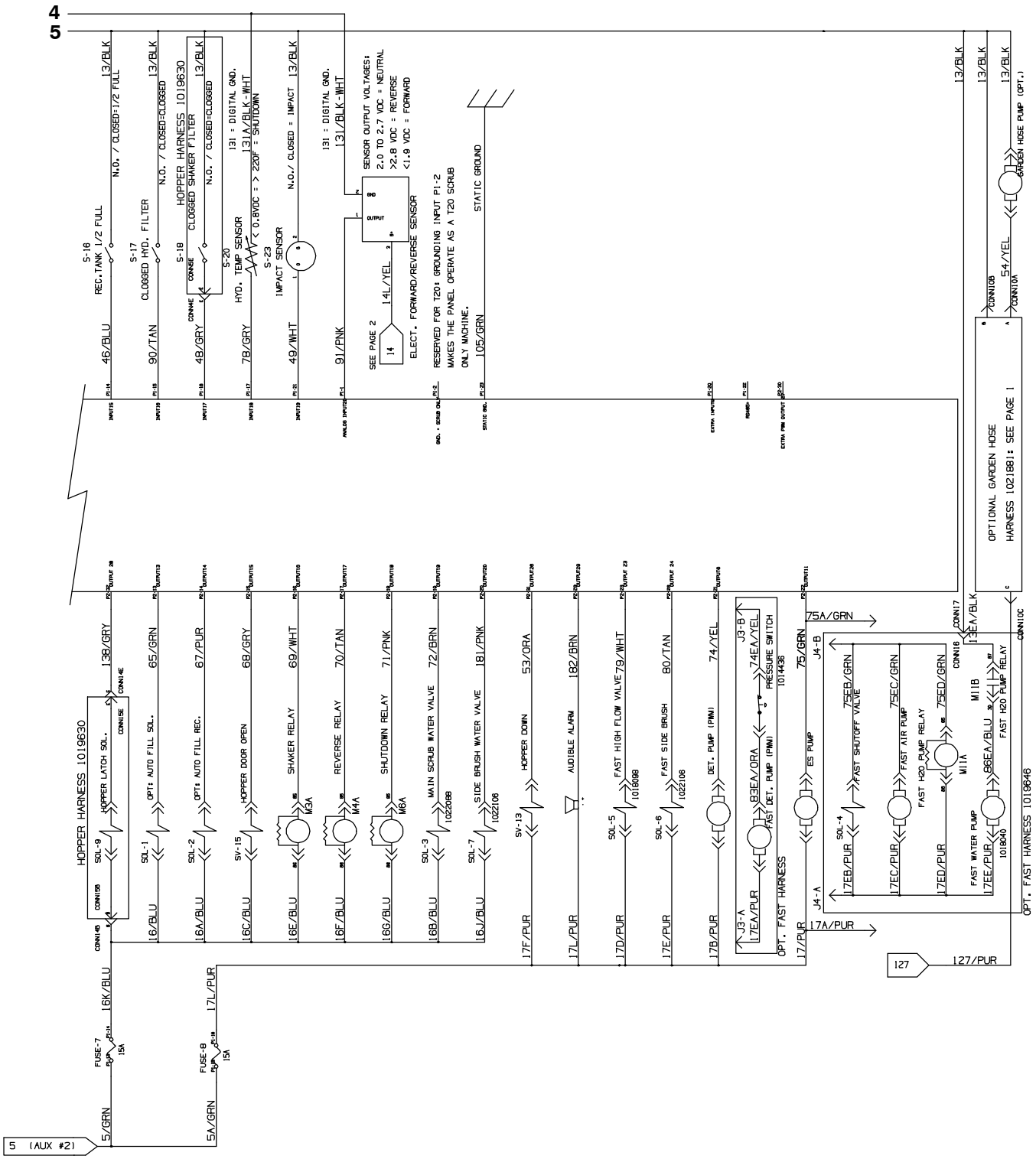

1018547

Fig. 66 – Electrical Schematic (002533–003478)

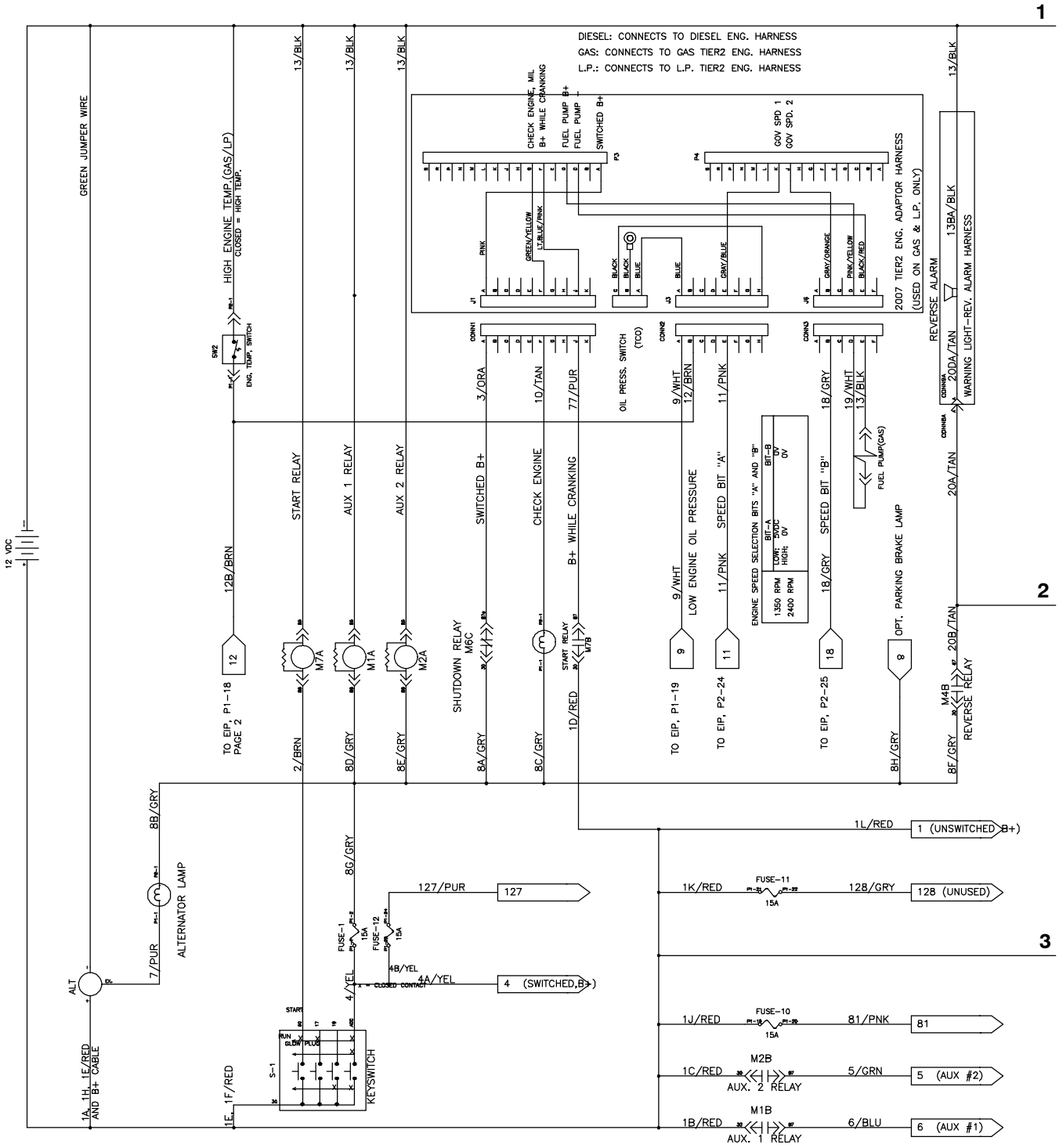

1018547 – 354458

Fig. 66 – Electrical Schematic (002533–003478)

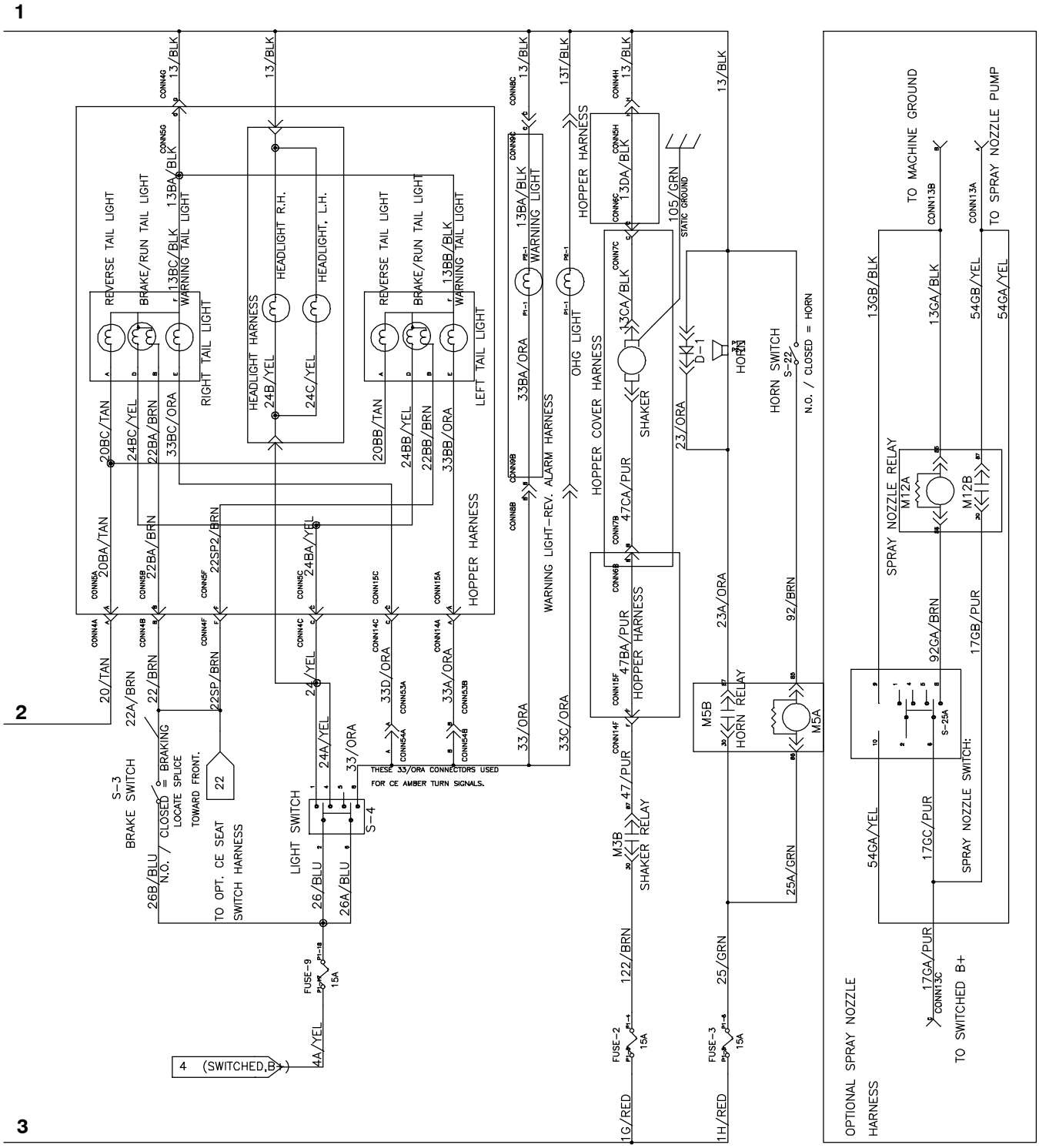

1018547 – 354458

Fig. 66 – Electrical Schematic (002533–003478)

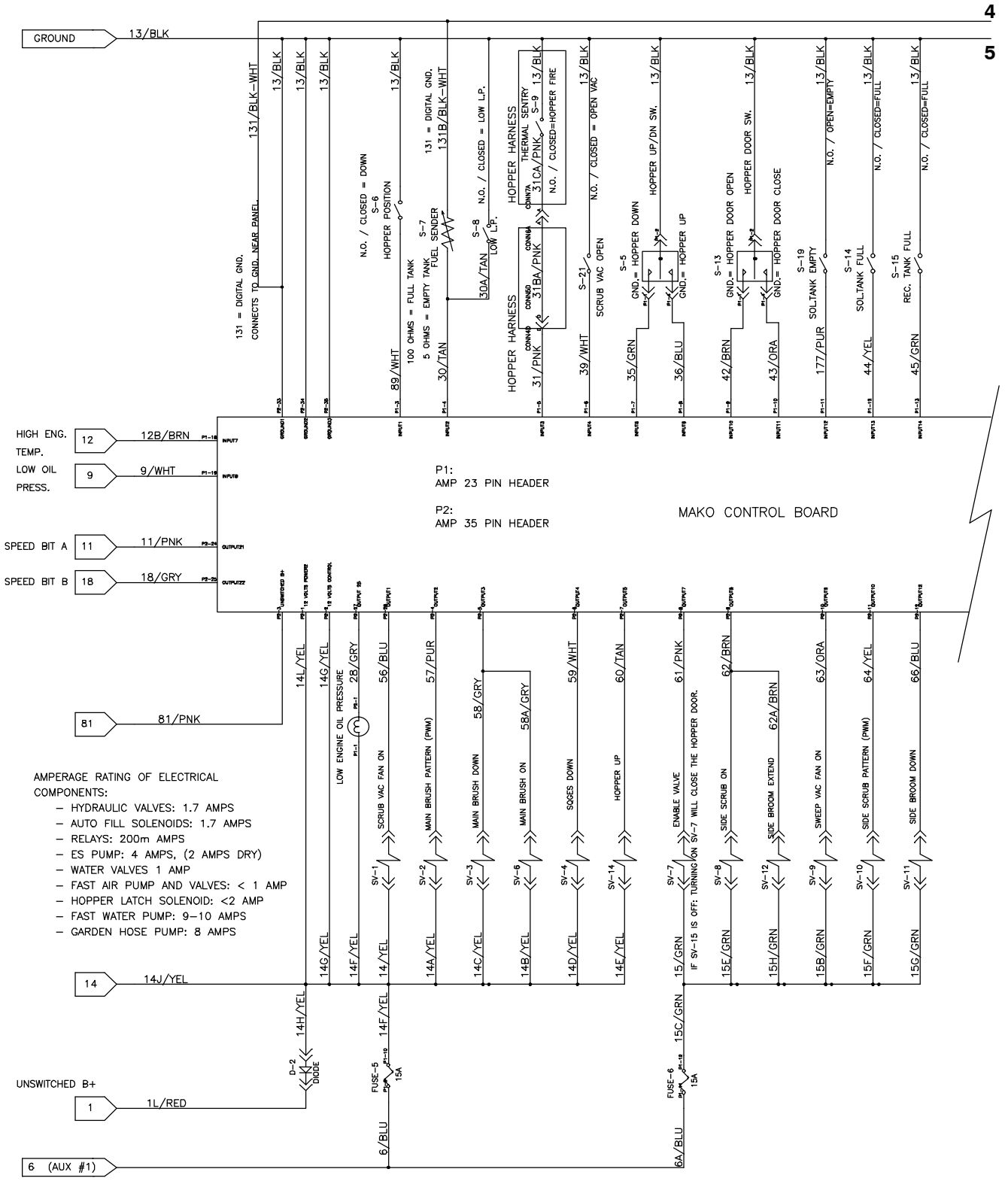

1018547 – 354458

Fig. 66 – Electrical Schematic (002533–003478)

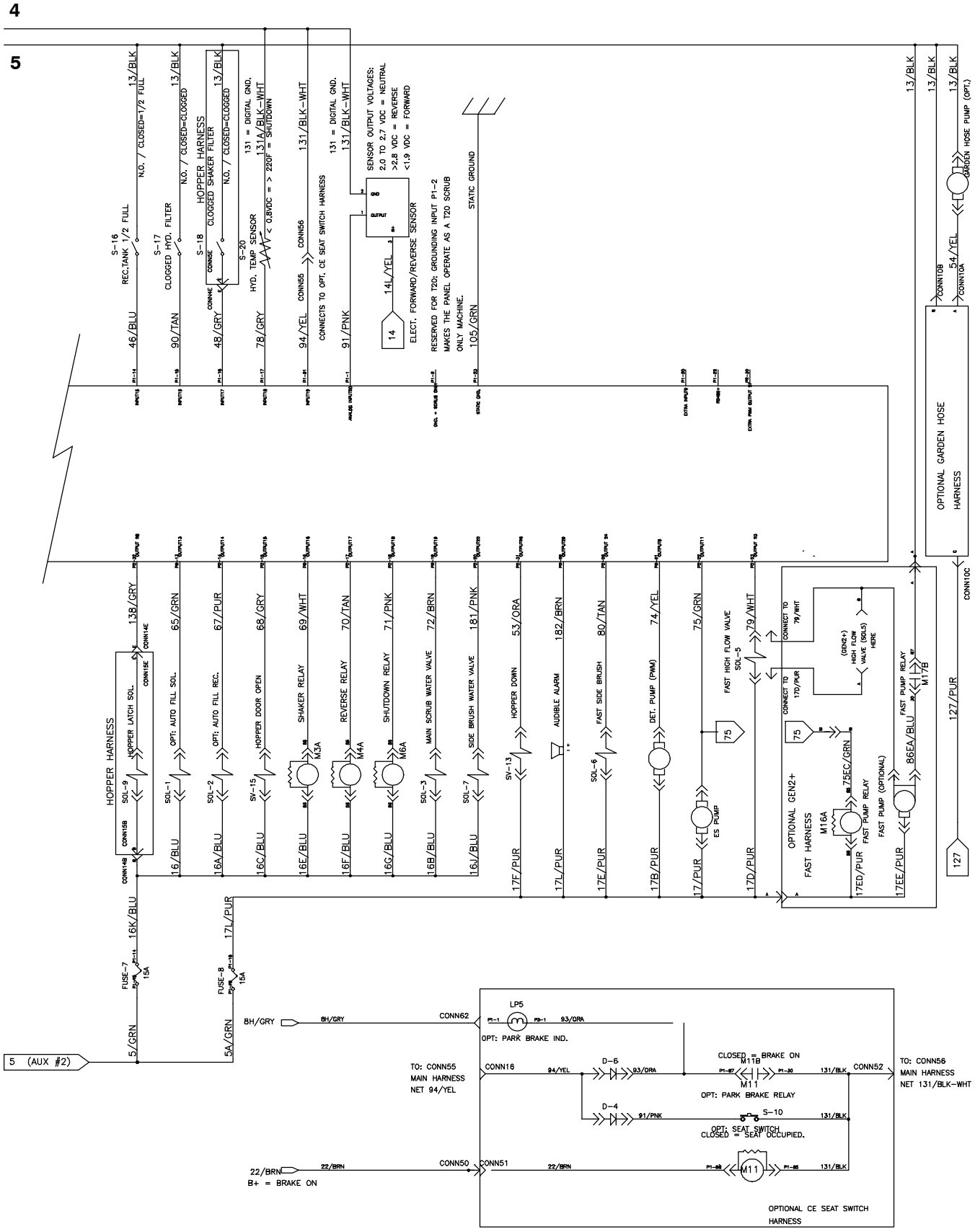

1018547 – 354458

Fig. 66 – Electrical Schematic (002533–003478)

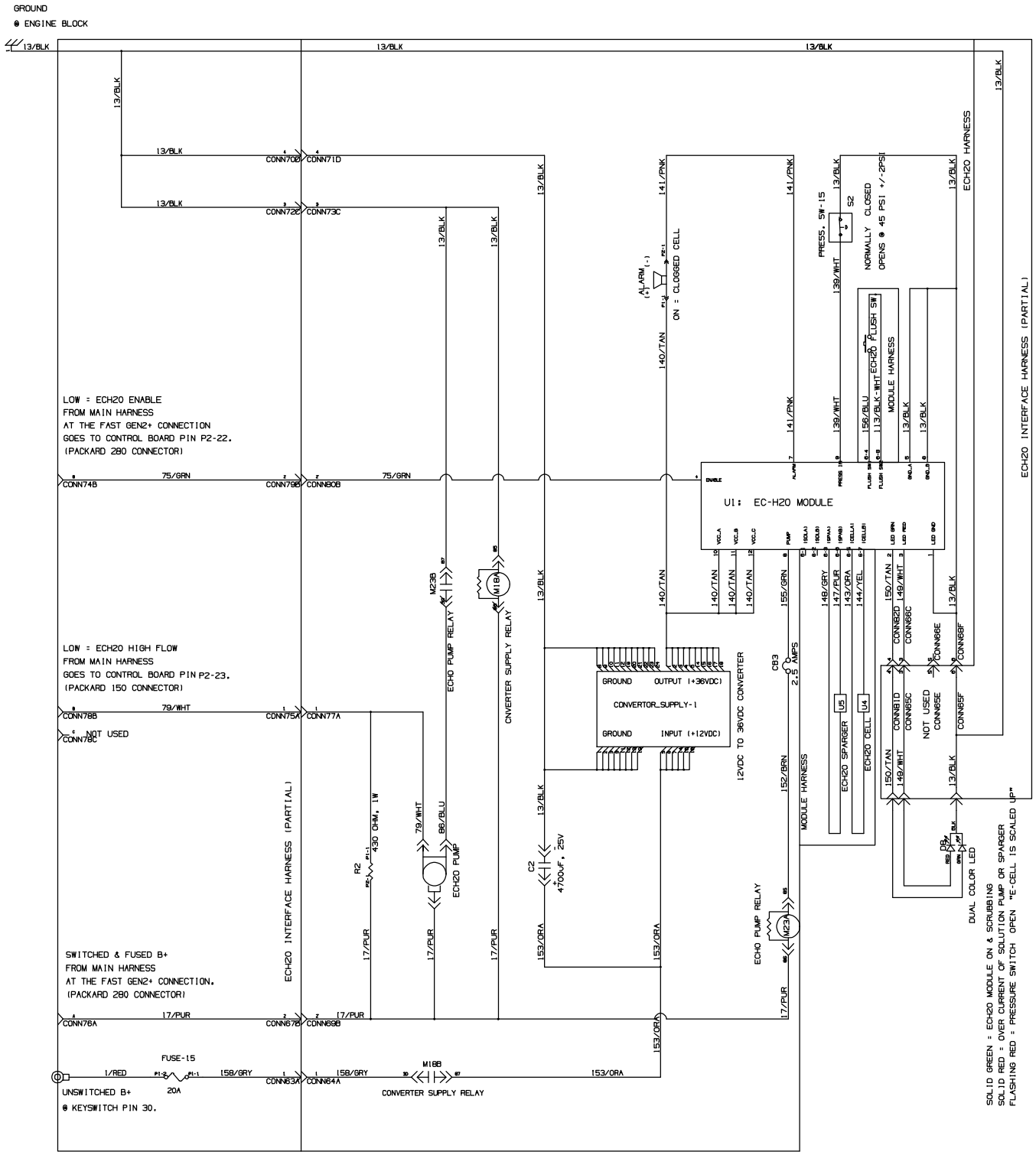

EC-H2O OPTION

1018547 – 354458

Fig. 67 – Electrical Schematic (003479–)

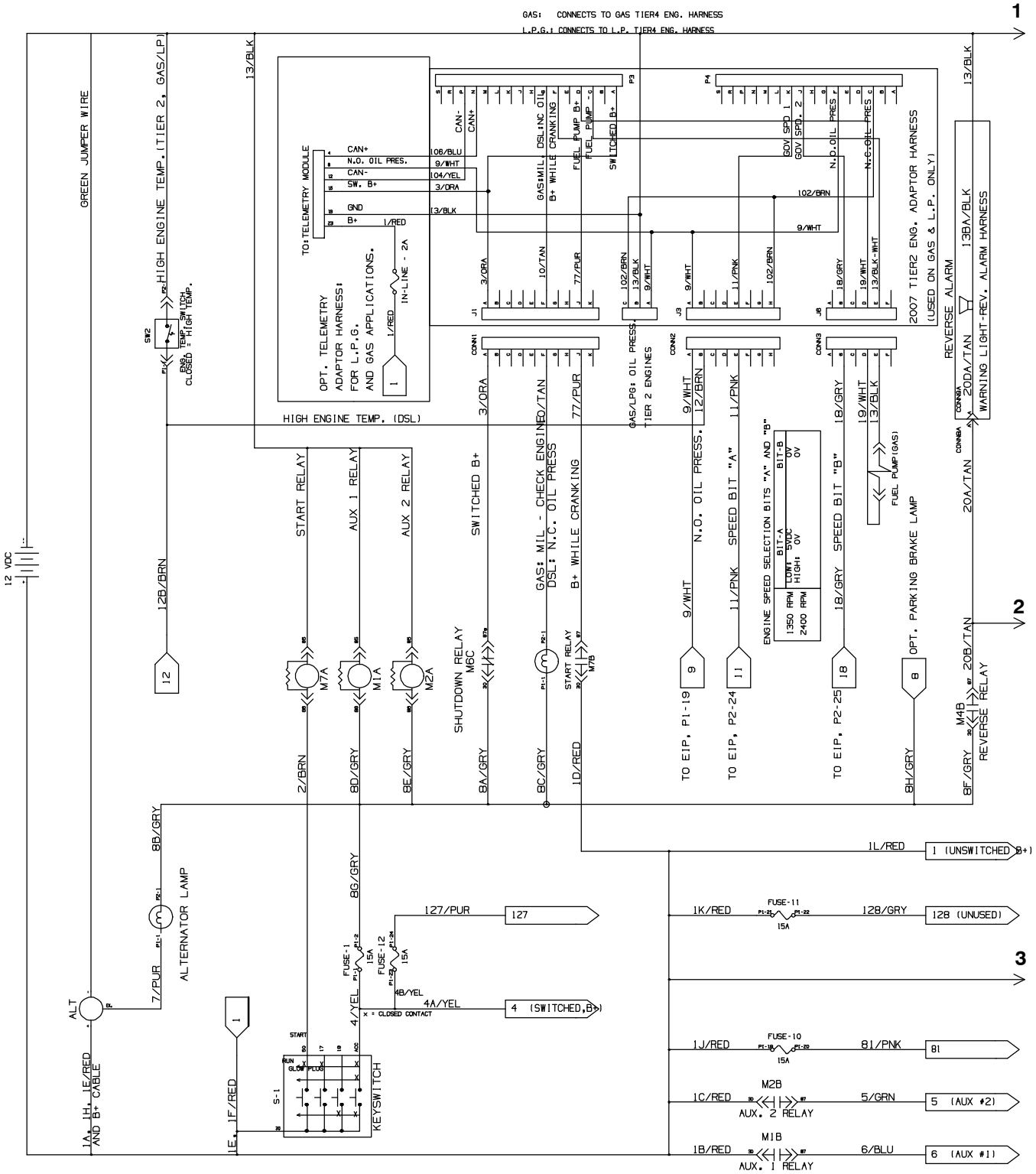

1018547 – 354458

Fig. 67 – Electrical Schematic (003479–)

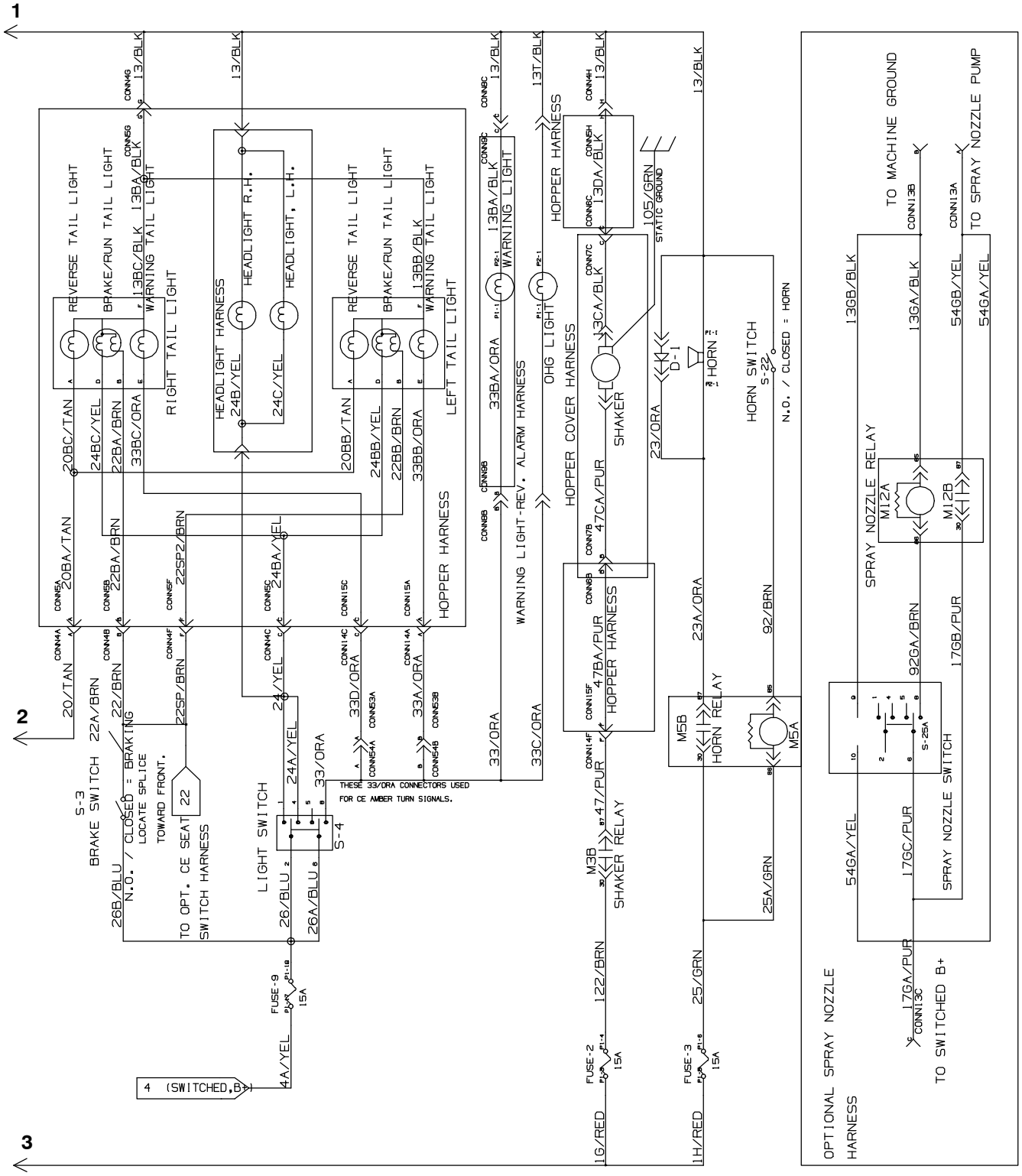

1018547 – 354458

Fig. 67 – Electrical Schematic (003479–)

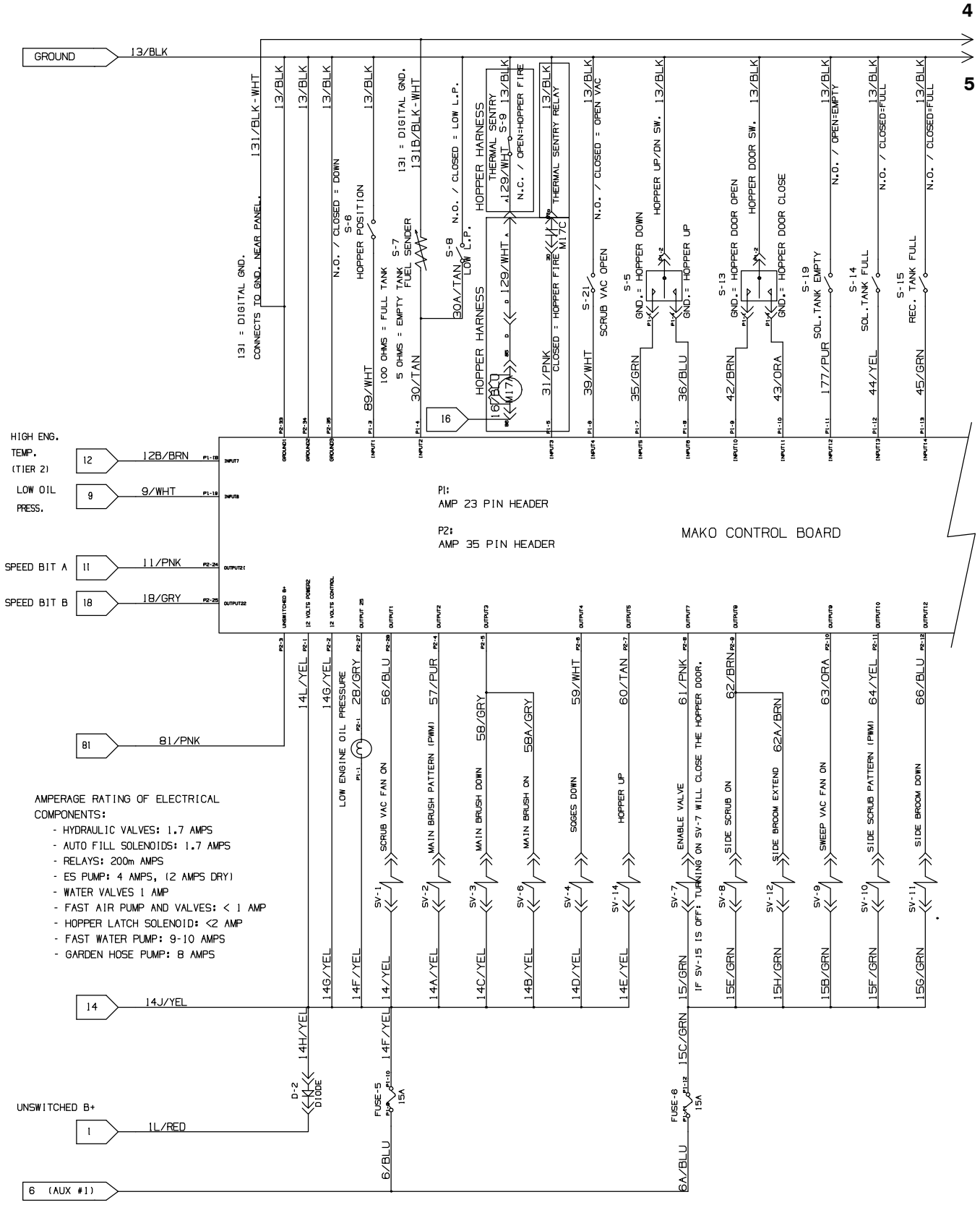

1018547 – 354458

Fig. 67 – Electrical Schematic (003479–)

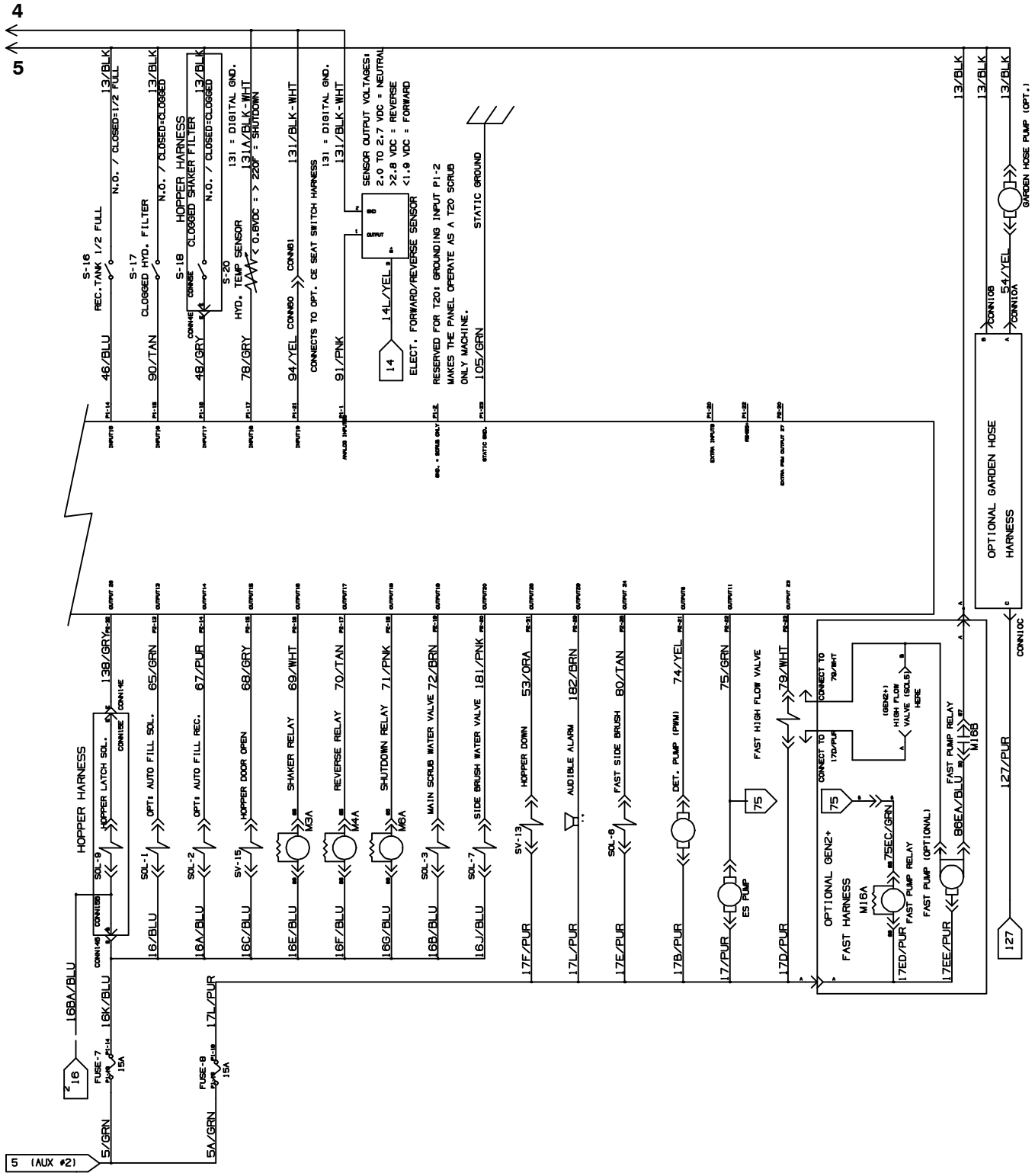

1018547 – 354458

Fig. 67 – Electrical Schematic (003479–)

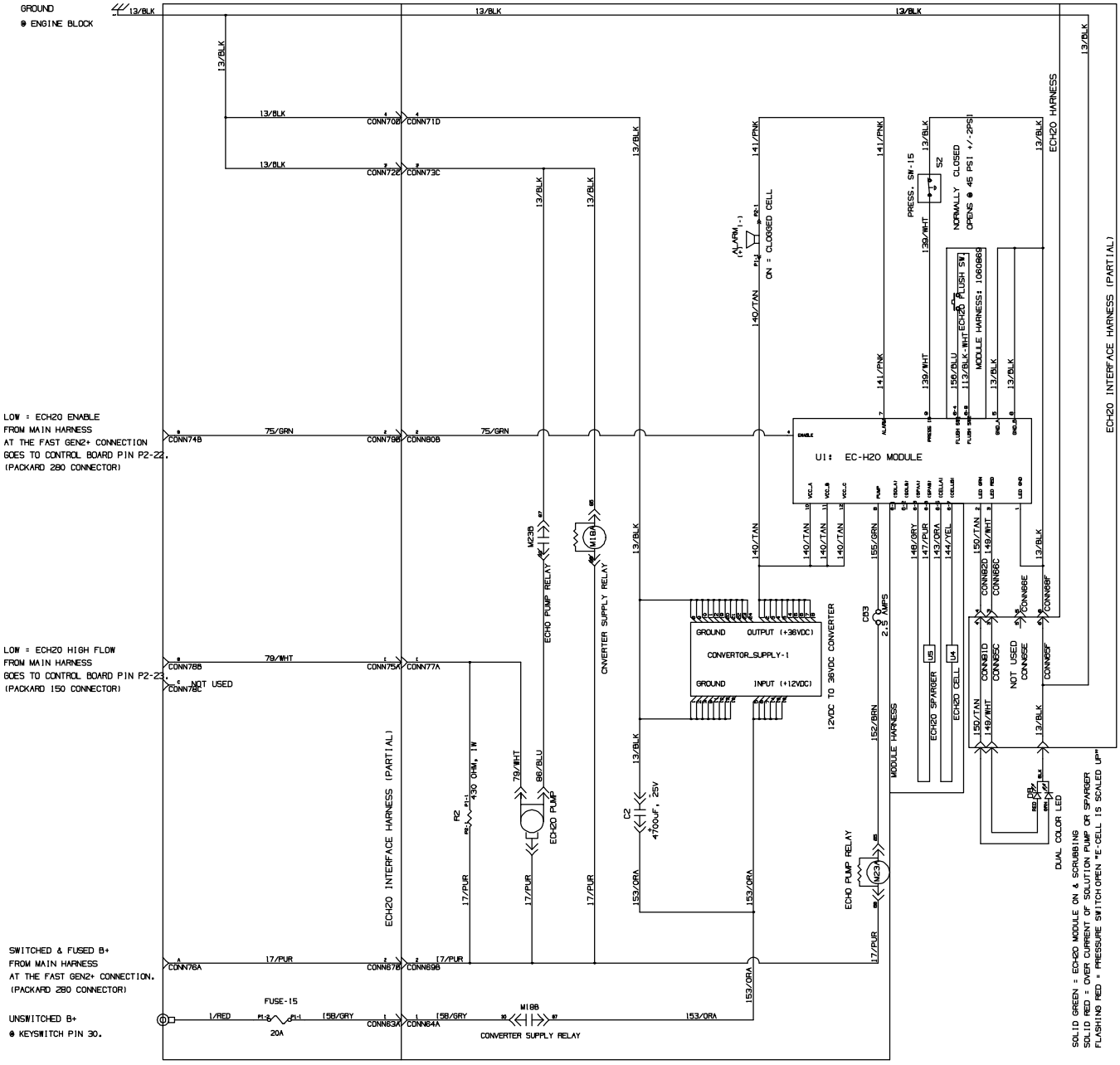

EC-H2O OPTION

1018547 – 354458

Fig. 67 – Electrical Schematic (003479–)

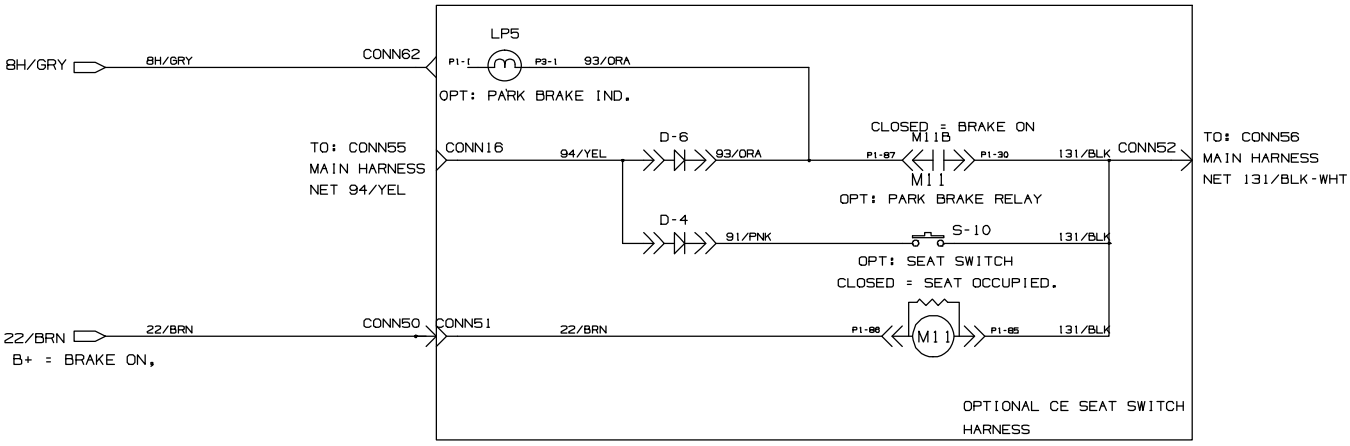

OPTIONAL CE SEAT SWITCH SHUTDOWN CIRCUIT.

1018547 – 354458

Fig. 67 – Electrical Schematic (003479–)

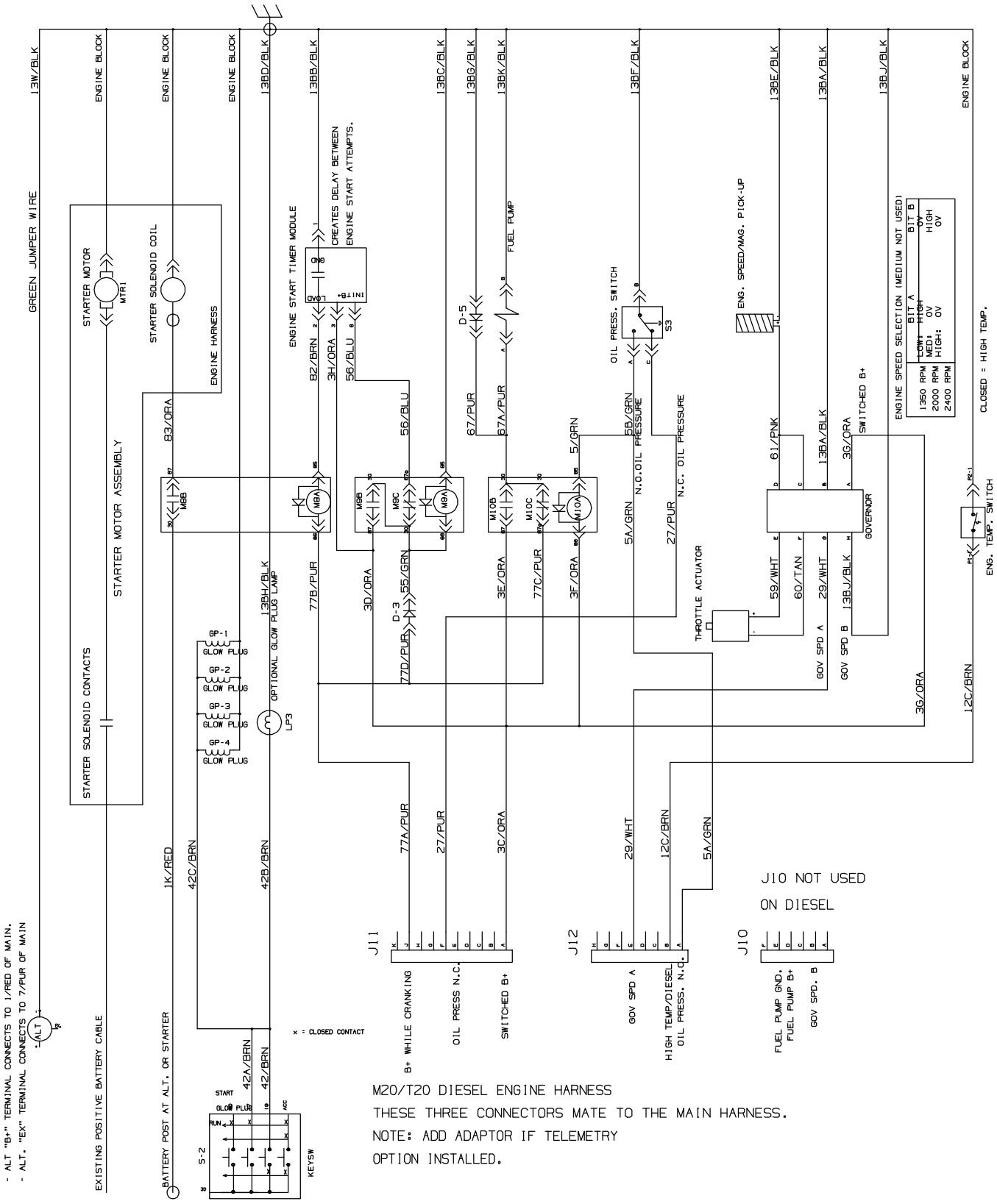

1018547 – 354458

Fig. 67 – Electrical Schematic (003479–)

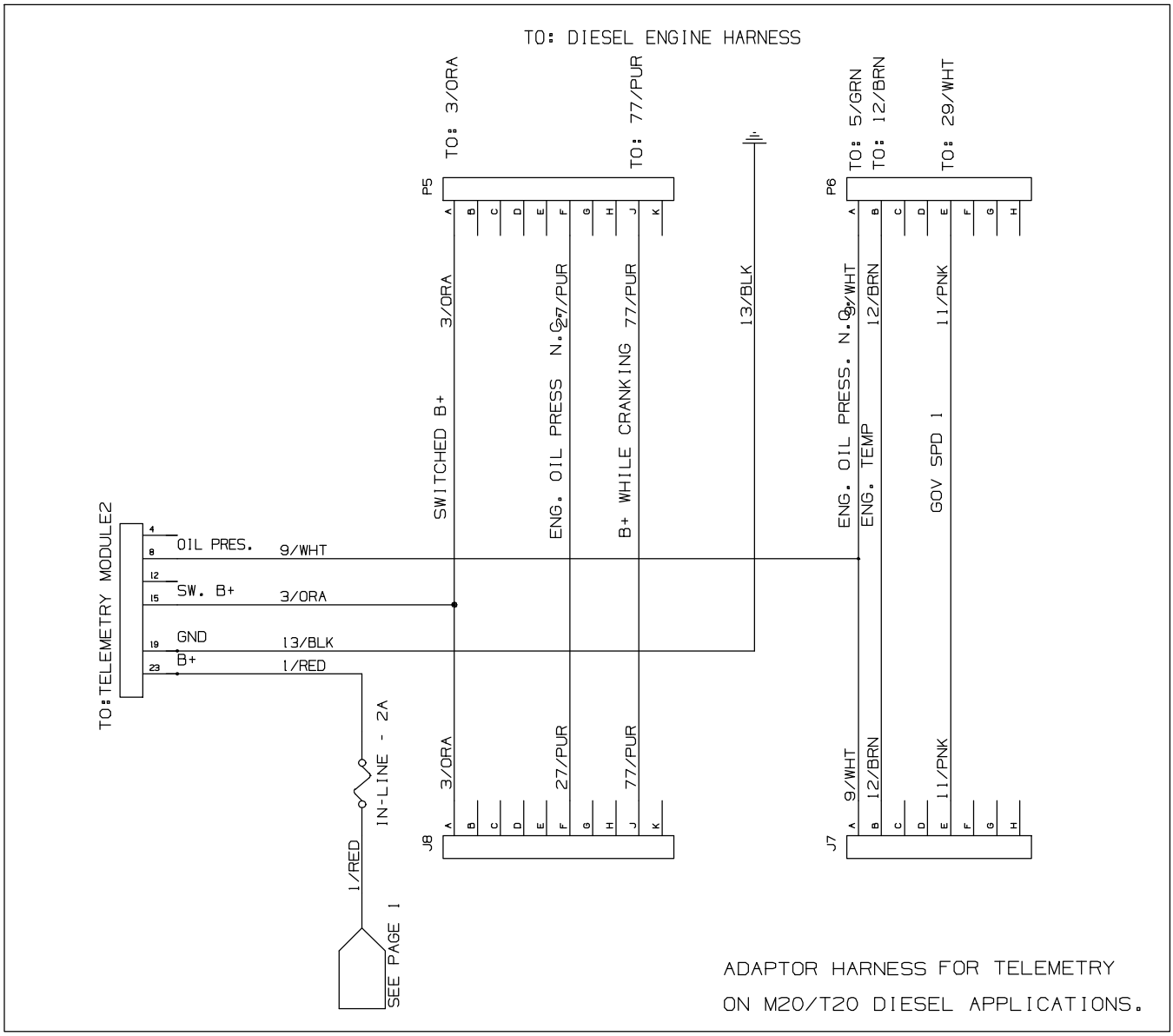

1018547 – 354458

Fig. 68 – Electrical Wire Harnesses Group, Main

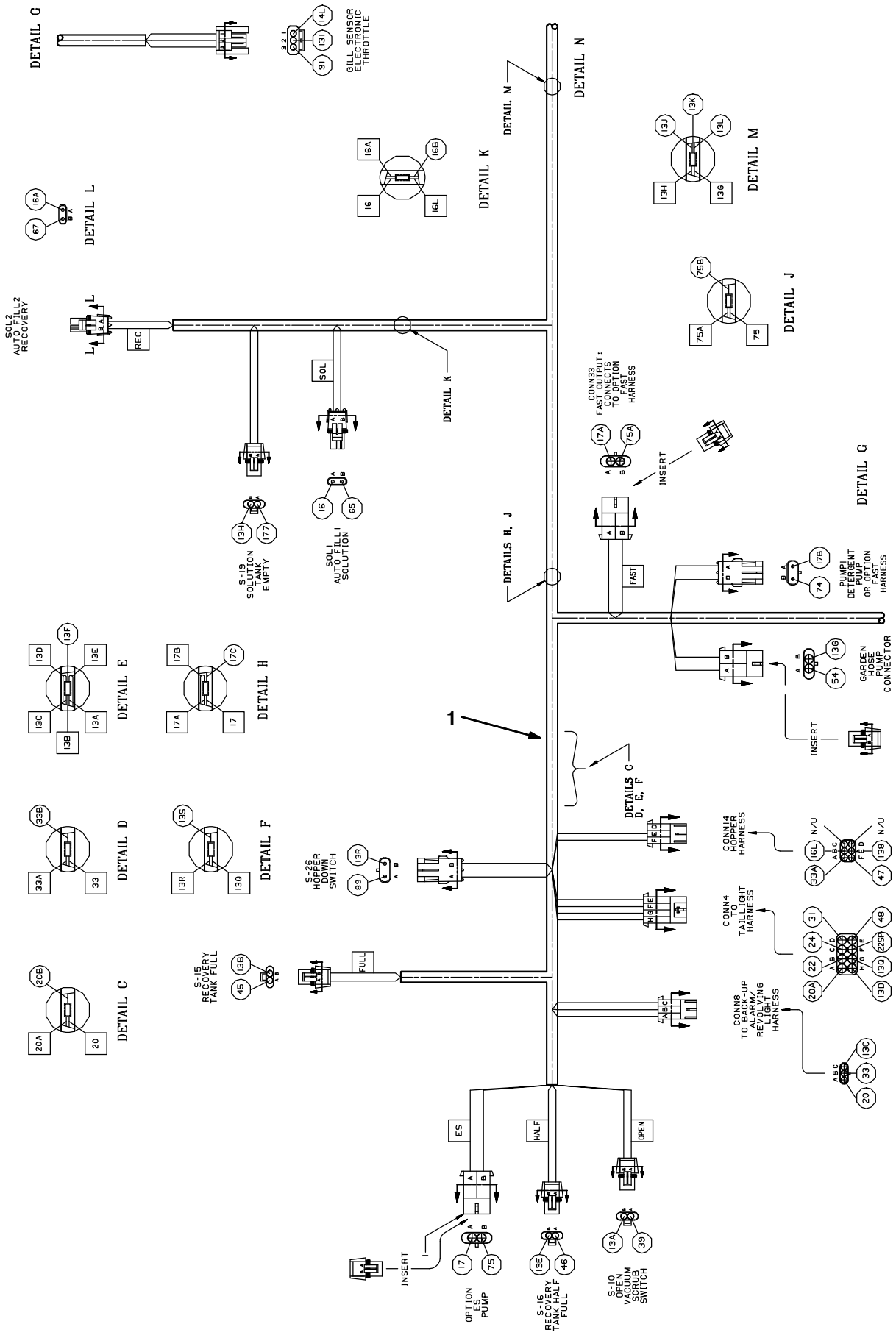

Fig. 68 – Electrical Wire Harness Group, Main

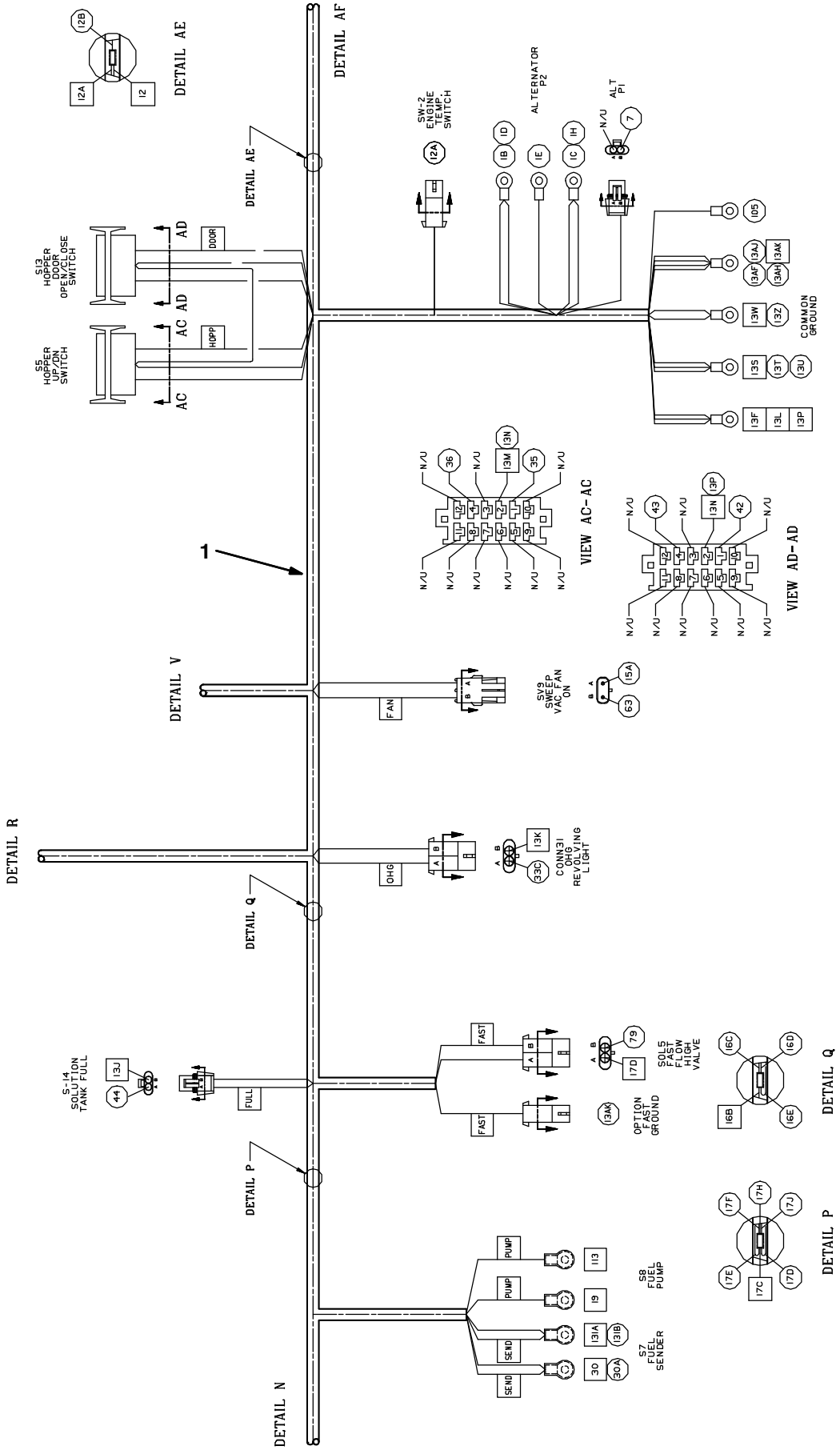

Fig. 68 – Electrical Wire Harness Group, Main

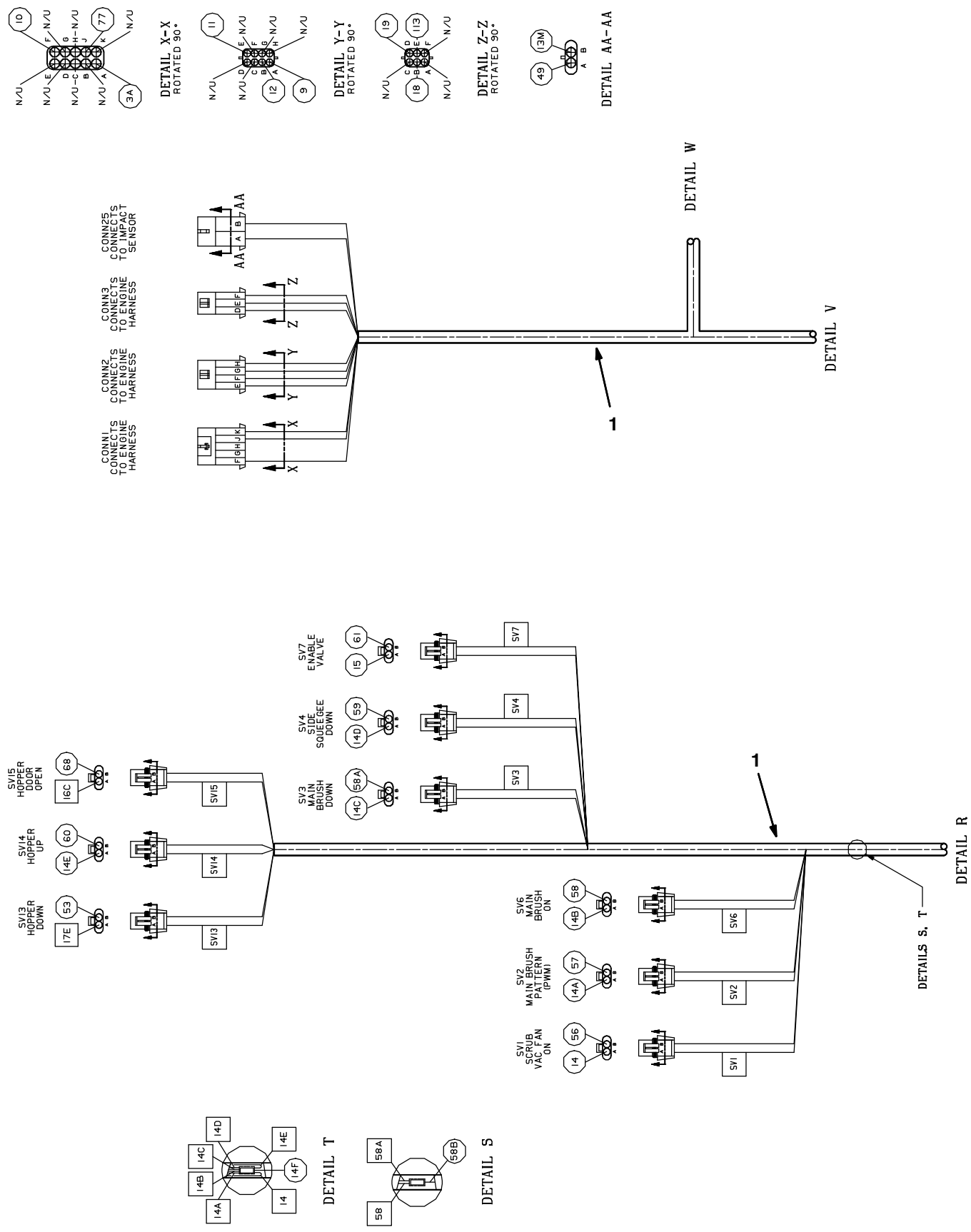

Fig. 68 – Electrical Wire Harness Group, Main

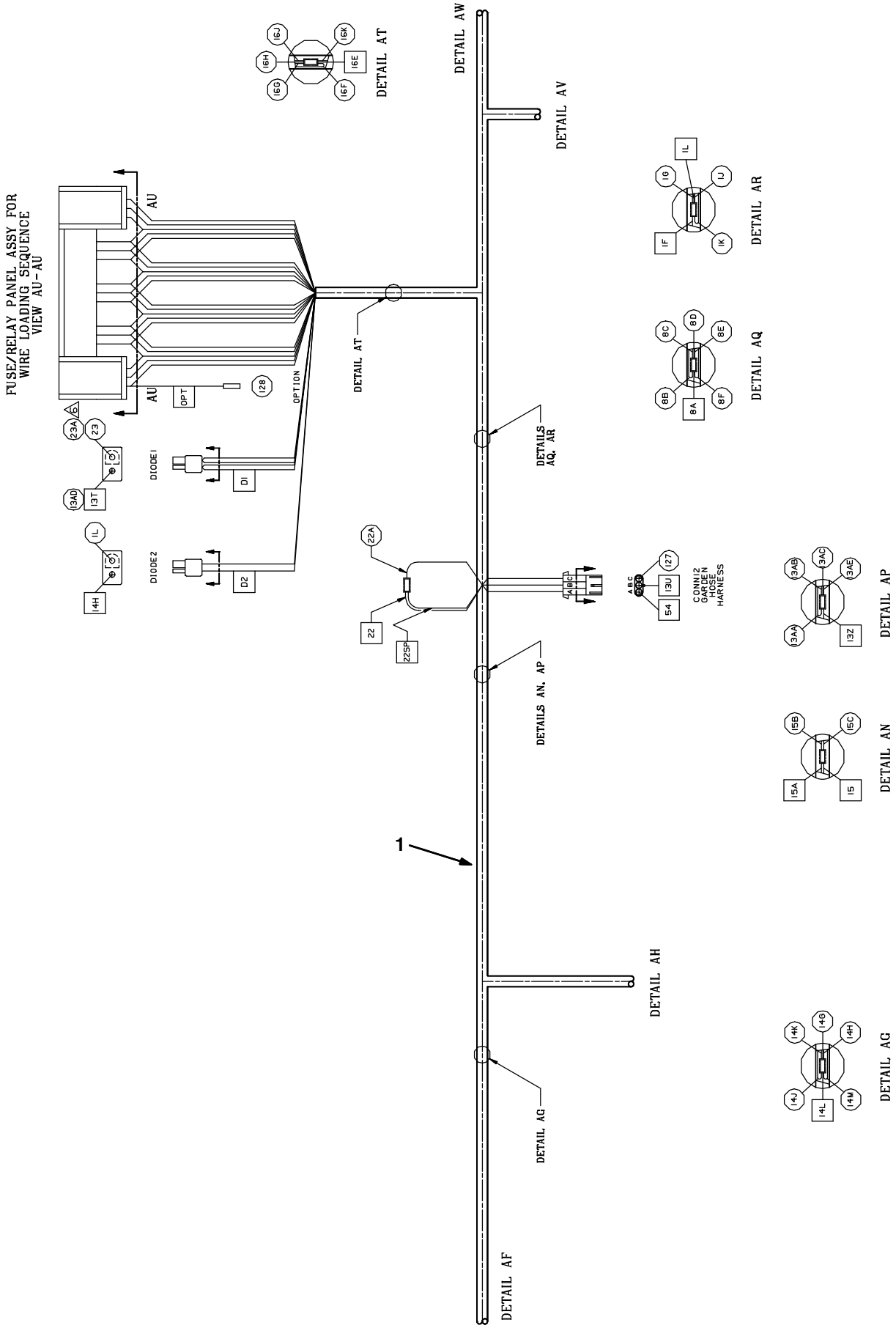

Fig. 68 – Electrical Wire Harness Group, Main

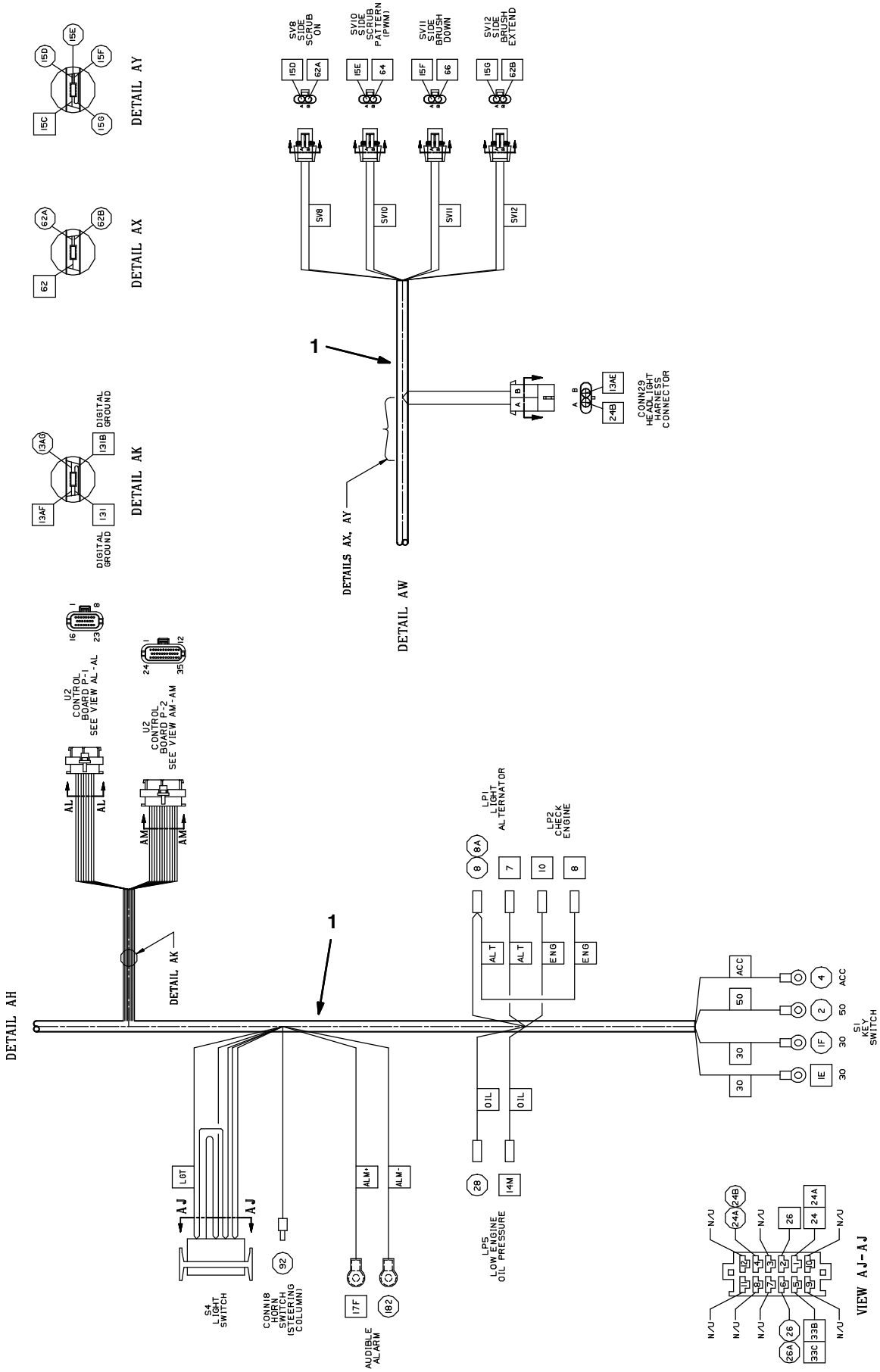

Fig. 68 – Electrical Wire Harness Group, Main

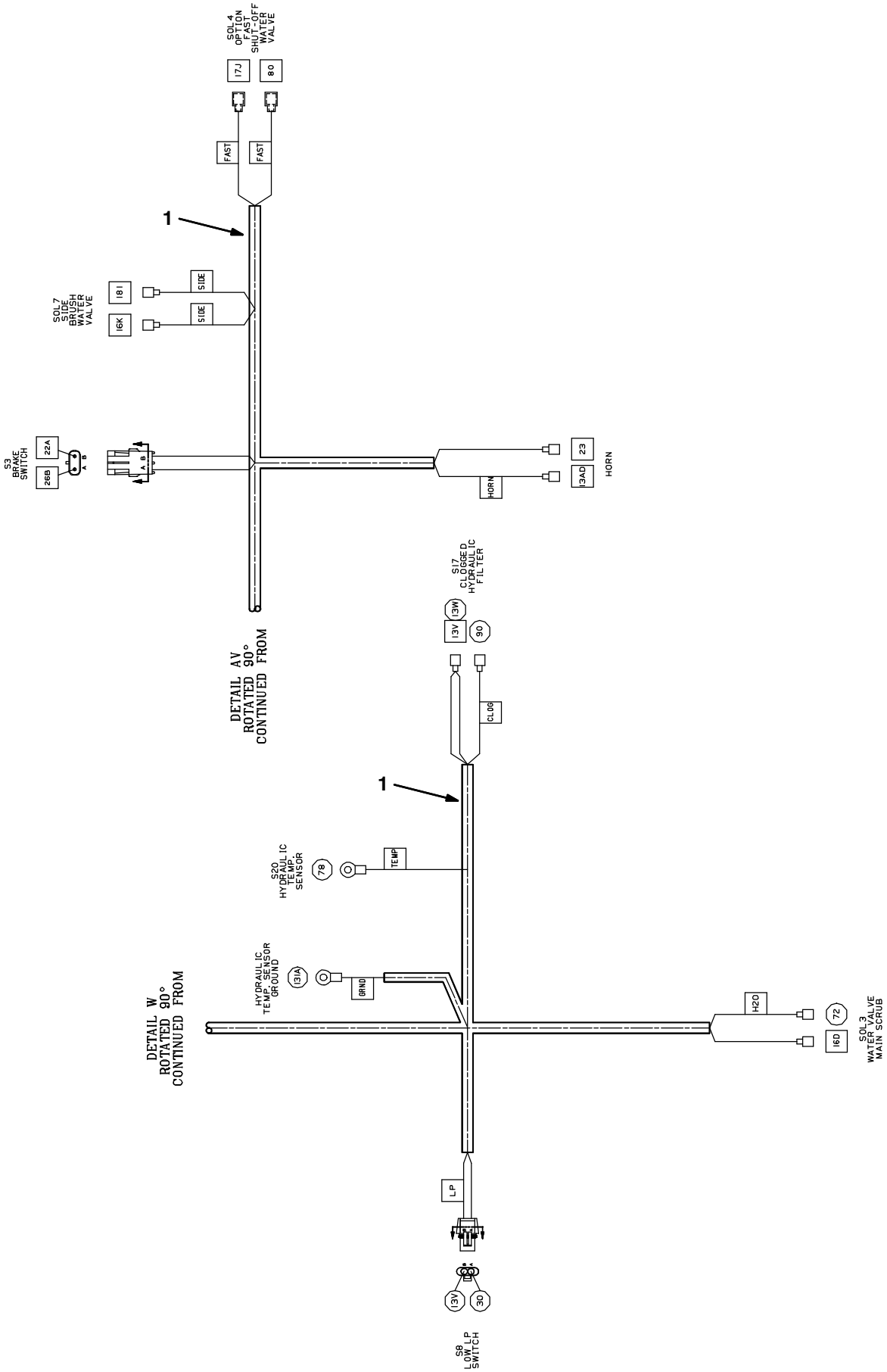

Fig. 68 – Electrical Wire Harness Group, Main

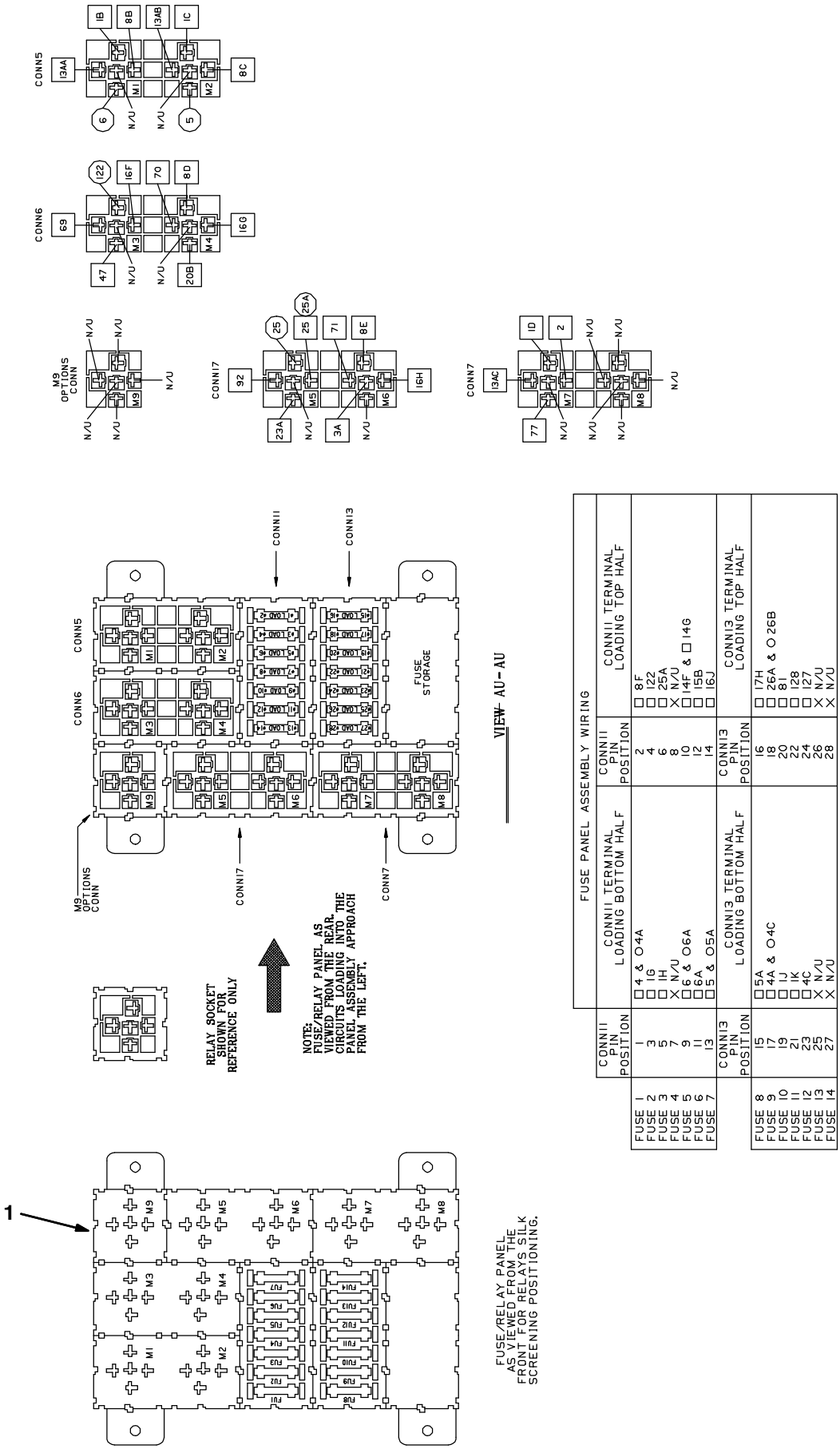

Fig. 68 – Electrical Wire Harness Group, Main

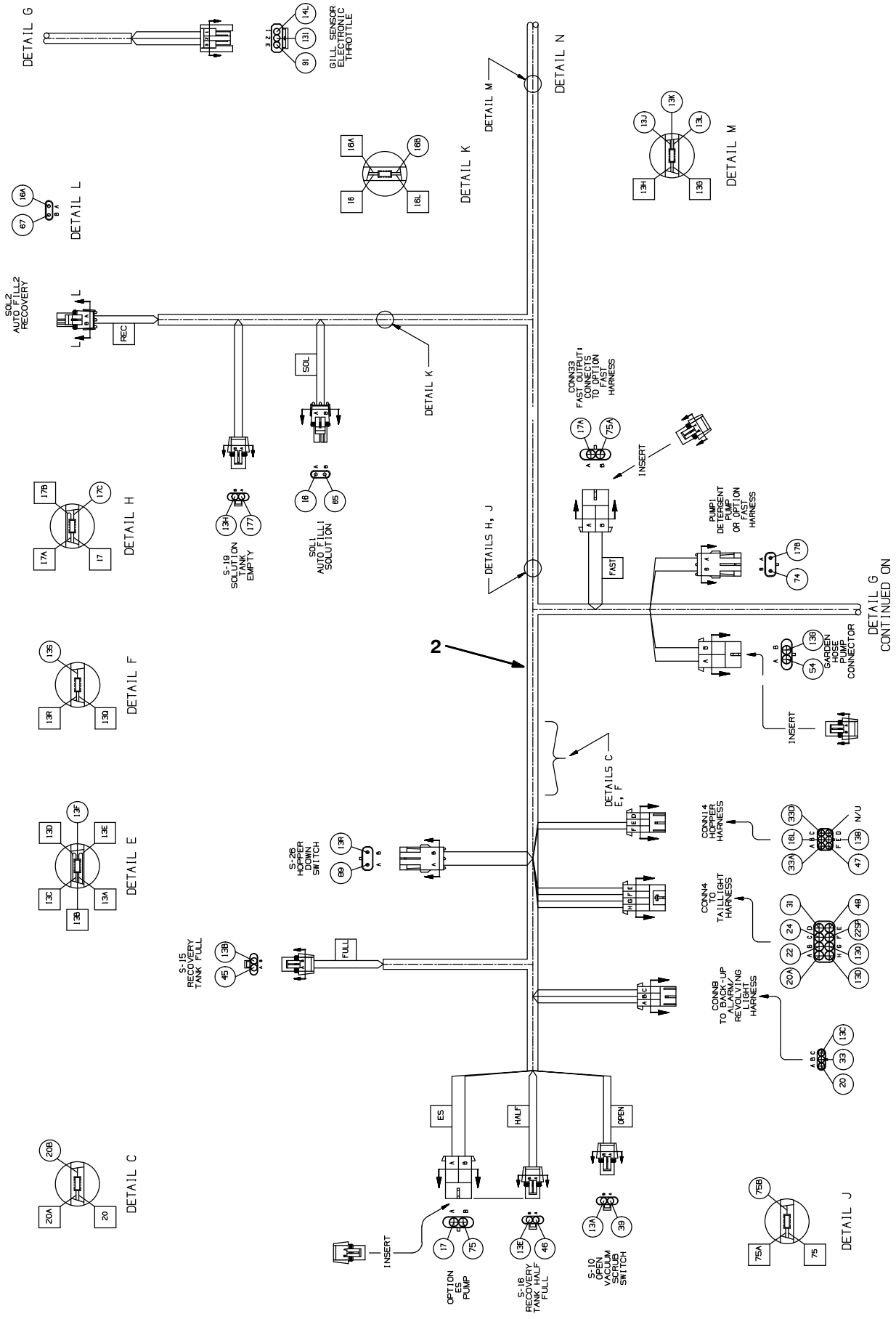

Fig. 68 – Electrical Wire Harness Group, Main

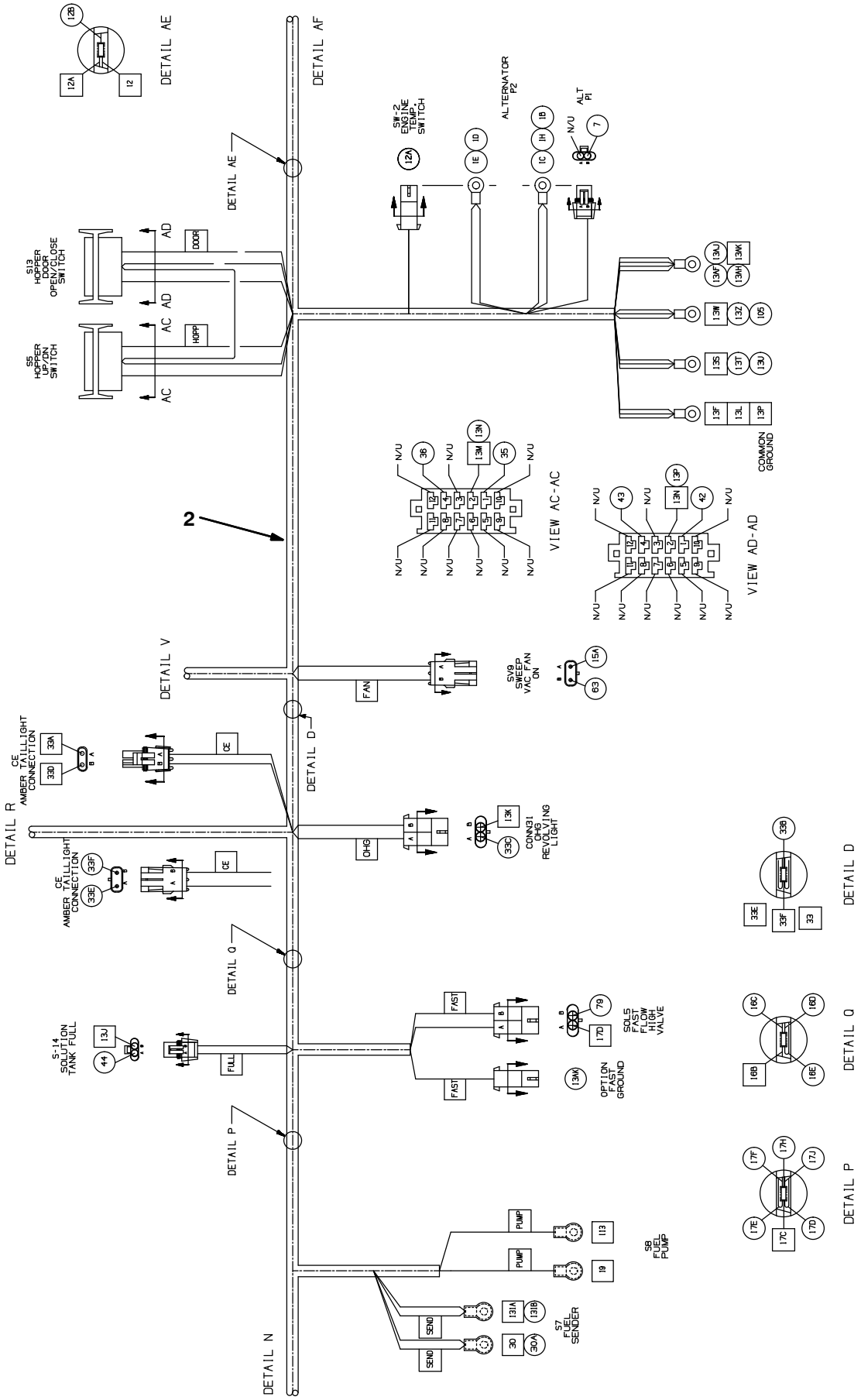

Fig. 68 – Electrical Wire Harness Group, Main

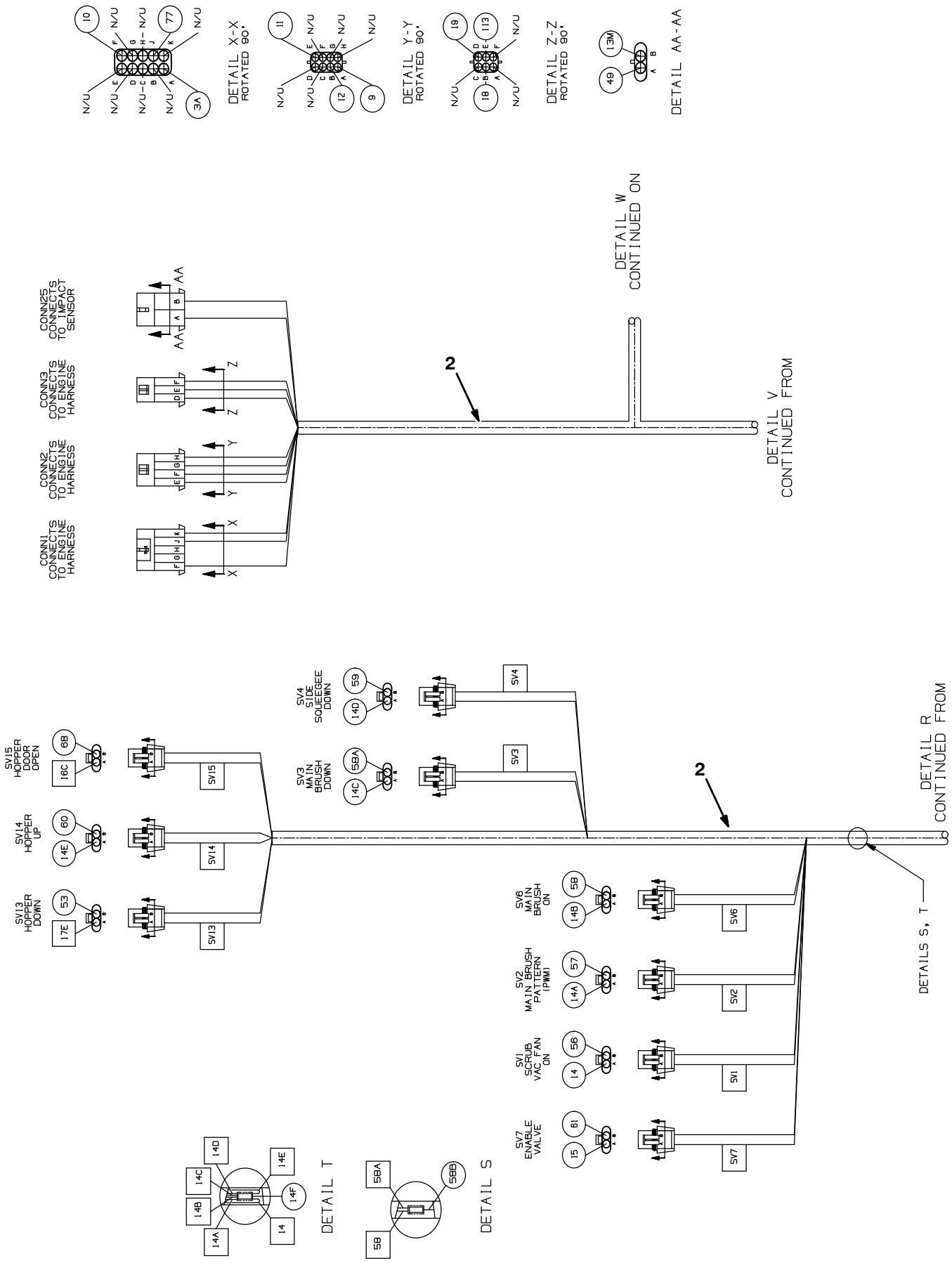

Fig. 68 – Electrical Wire Harness Group, Main

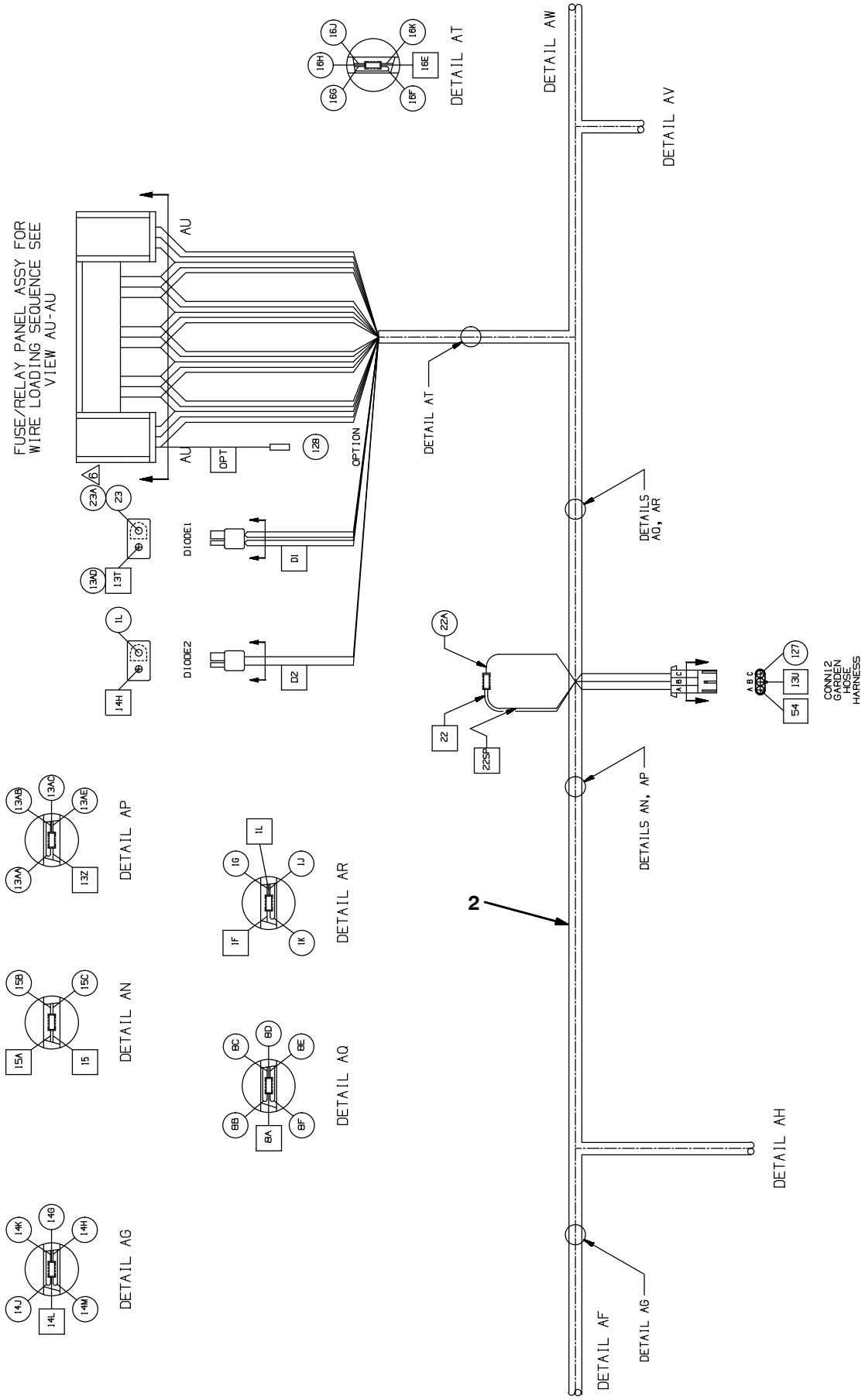

Fig. 68 – Electrical Wire Harness Group, Main

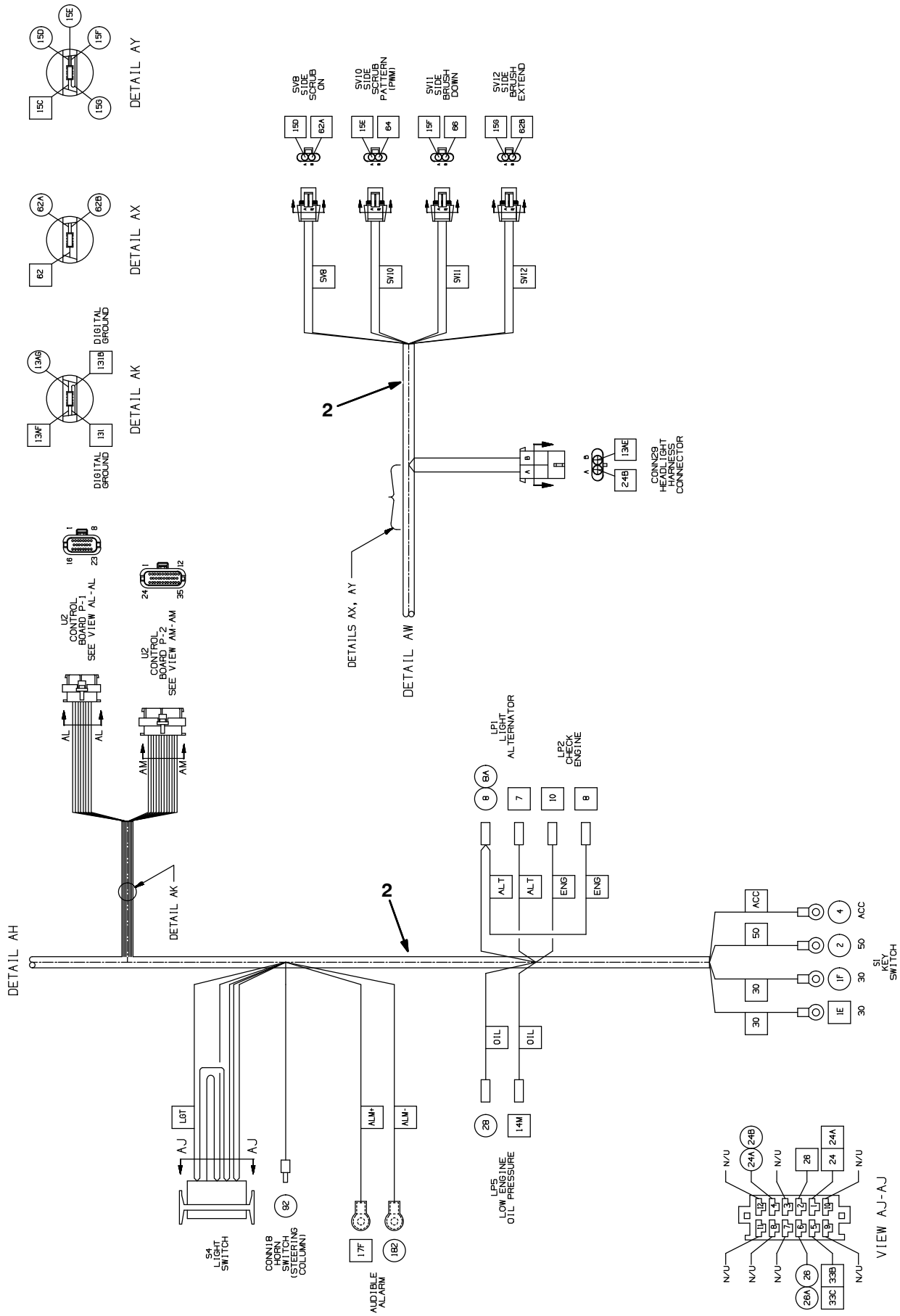

Fig. 68 – Electrical Wire Harness Group, Main

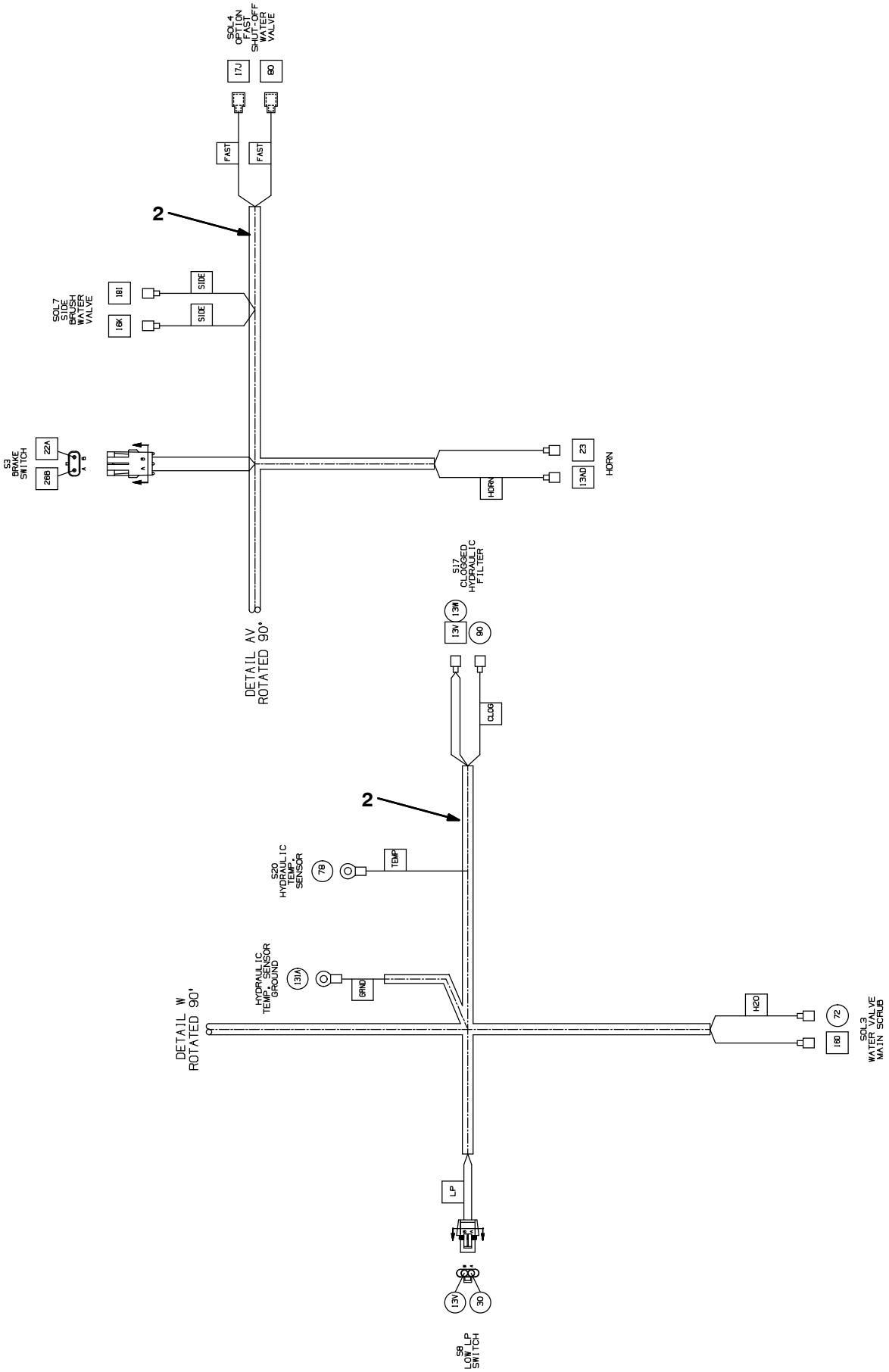

Fig. 68 – Electrical Wire Harness Group, Main

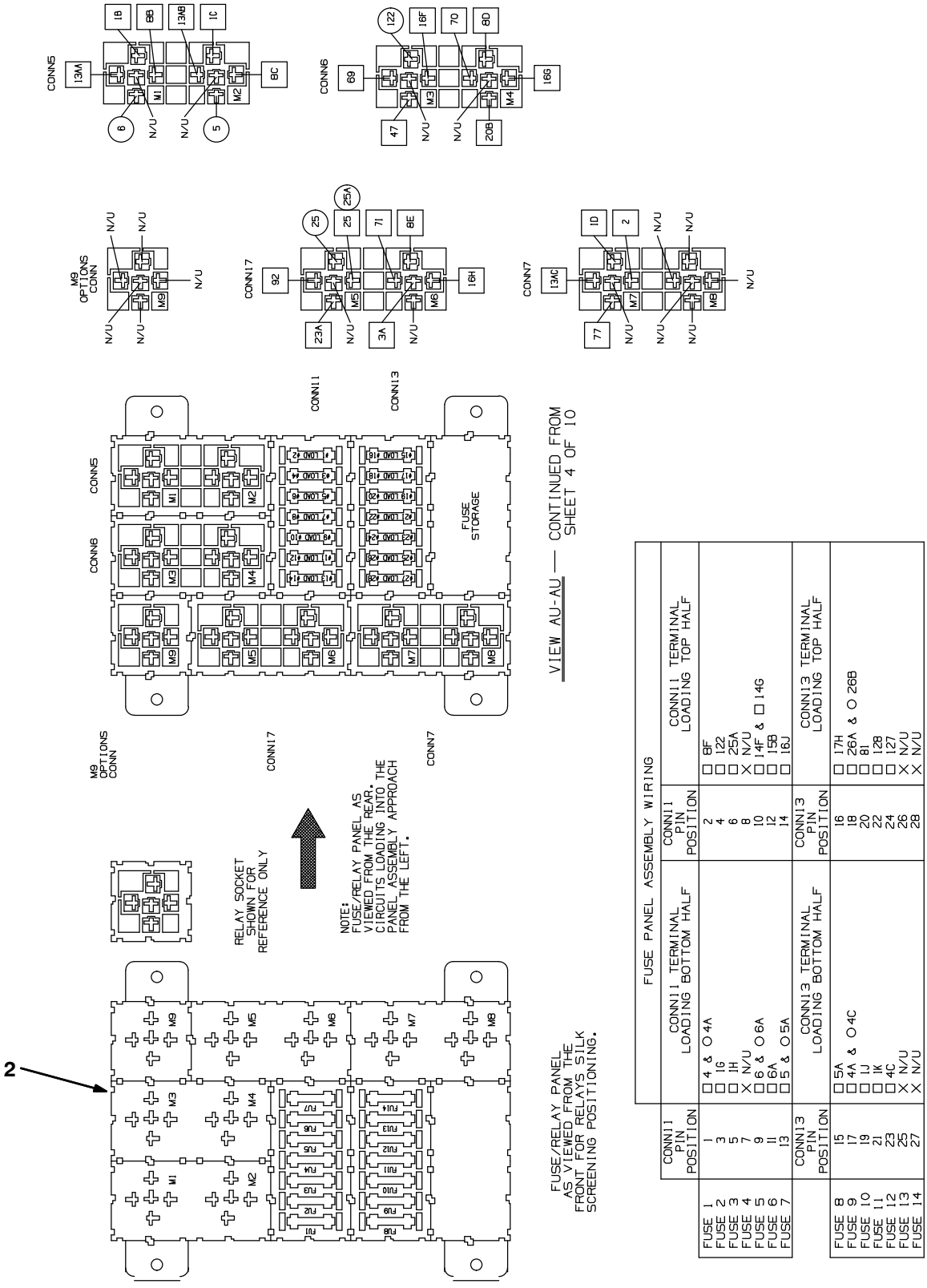

Ref.	Part No.	Serial Number	Description	Qty.
1	1018549	(000000–002273)	Harness, Main [M20]	1
2	1071603	(002274–)	Harness, Main [M20]	1

Fig. 69 – Electrical Wire Harness Group, Headlight

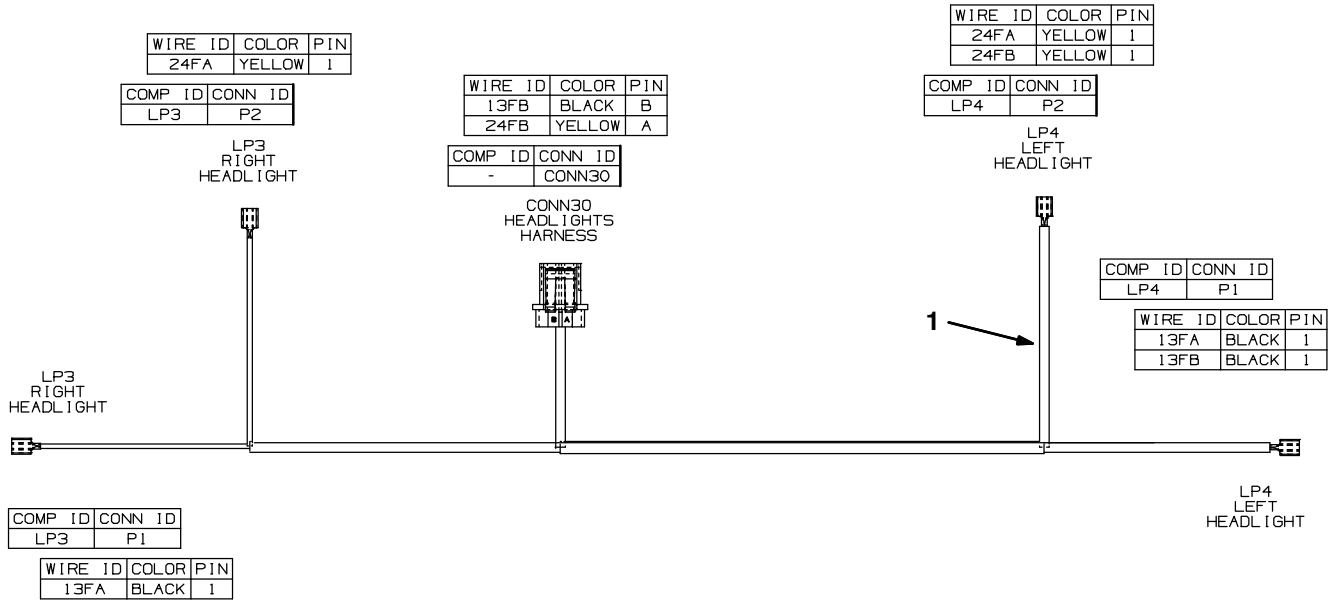

Ref.	Part No.	Serial Number	Description	Qty.
1	1024141	(000000–)	Harness, Headlight [M20 And T20]	1

Fig. 70 – Electrical Wire Harness Group, Hopper

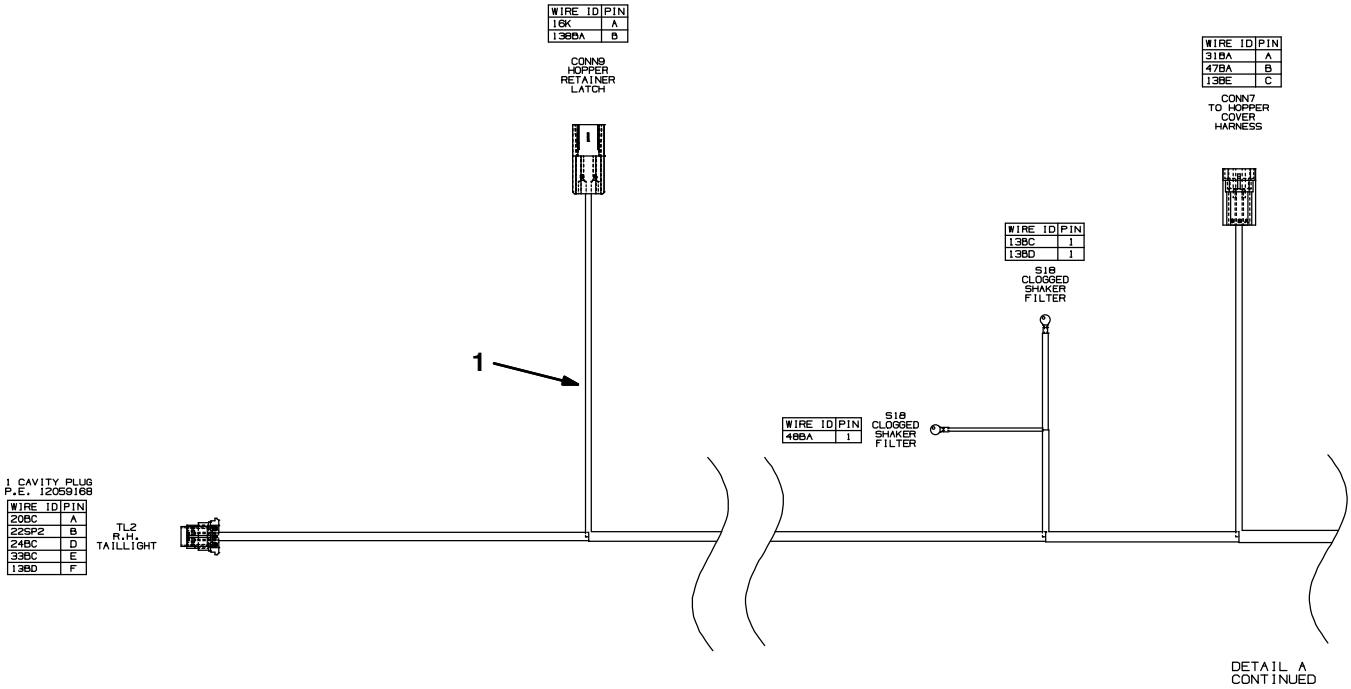

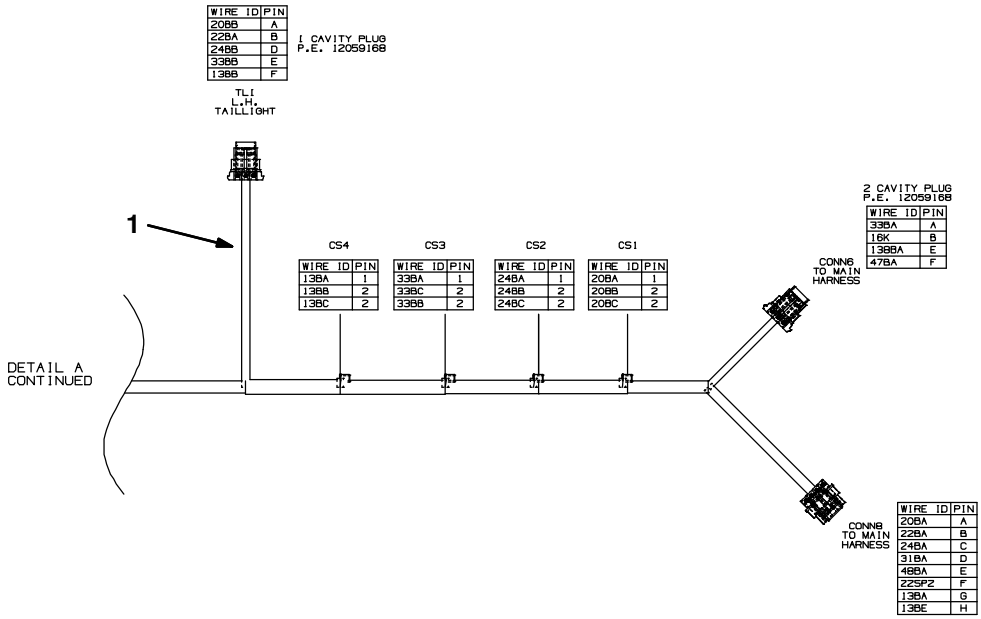

Fig. 70 – Electrical Wire Harness Group, Hopper

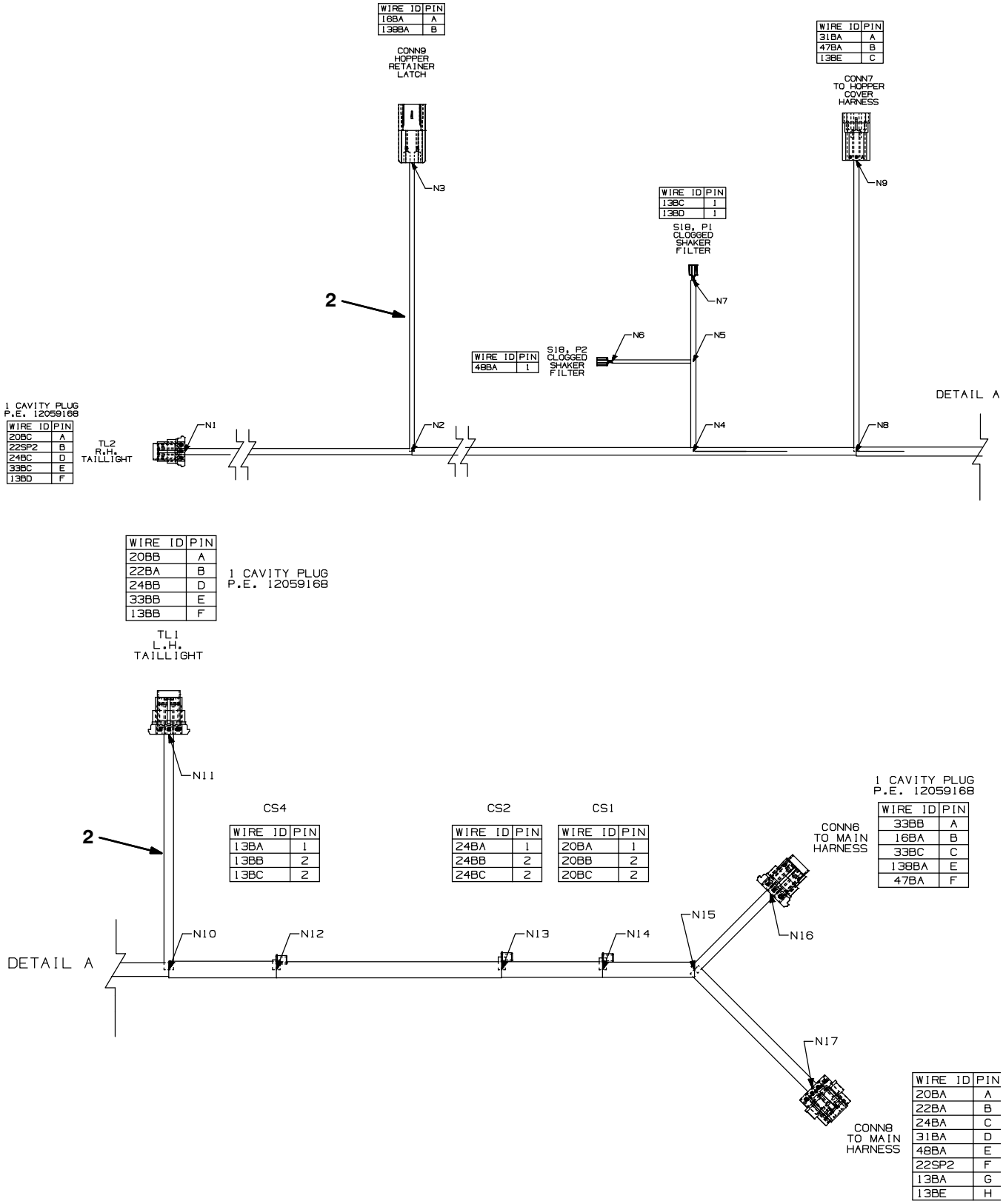

Fig. 70 – Electrical Wire Harness Group, Hopper

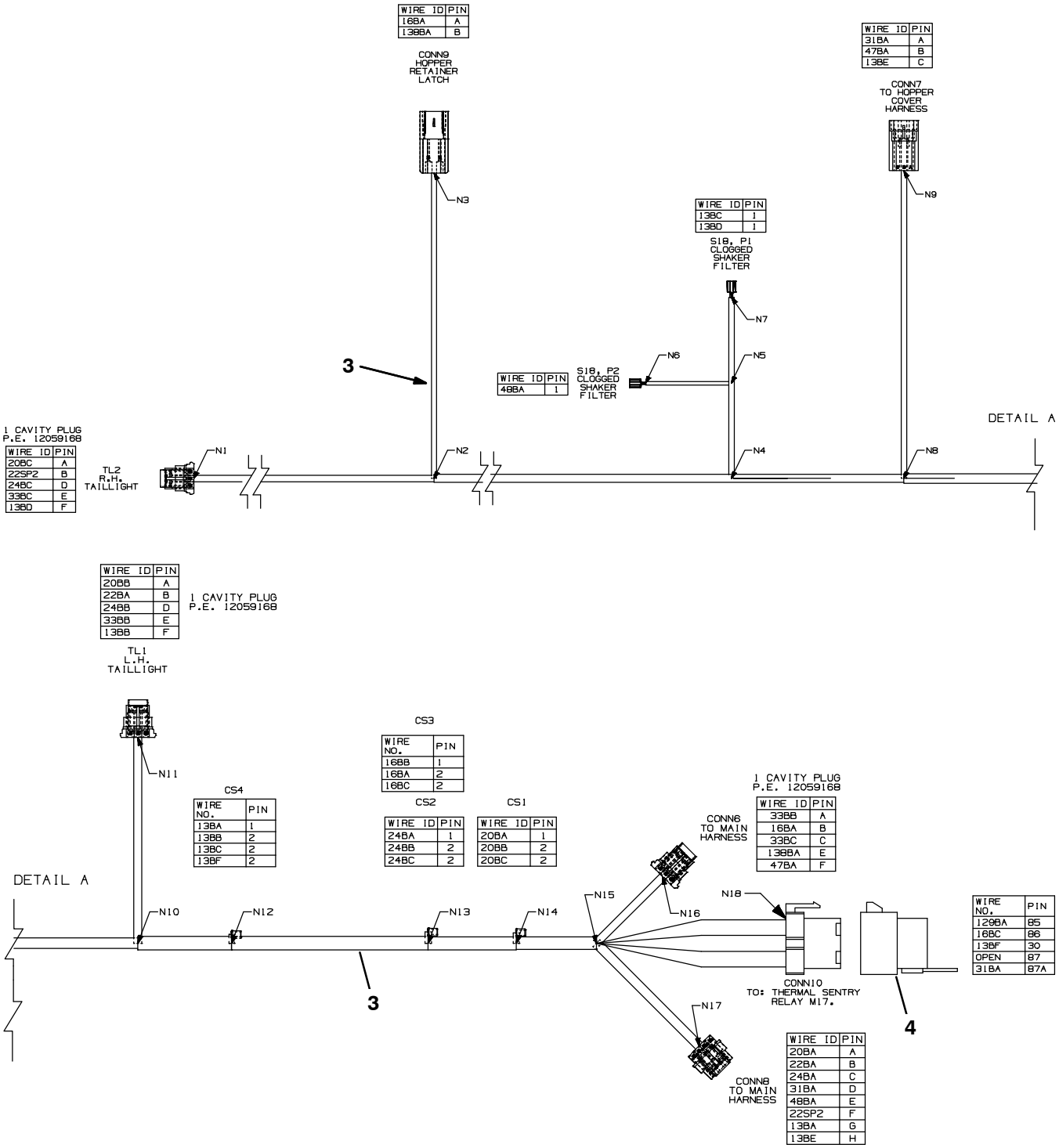

356253 – M20, M30

Ref.	Part No.	Serial Number	Description	Qty.
1	1019630	(000000–002273)	Harness, Hppr [M20]	1
2	1033624	(002274–003478)	Harness, Hppr [M20/M30]	1
3	1064371	(003479–)	Harness, Hppr [M20/M30]	1
4	56186	(003479–)	Relay, 12vdc, 040a, Spdt No	1

Fig. 71 – Electrical Wire Harness Group, Hopper Cover

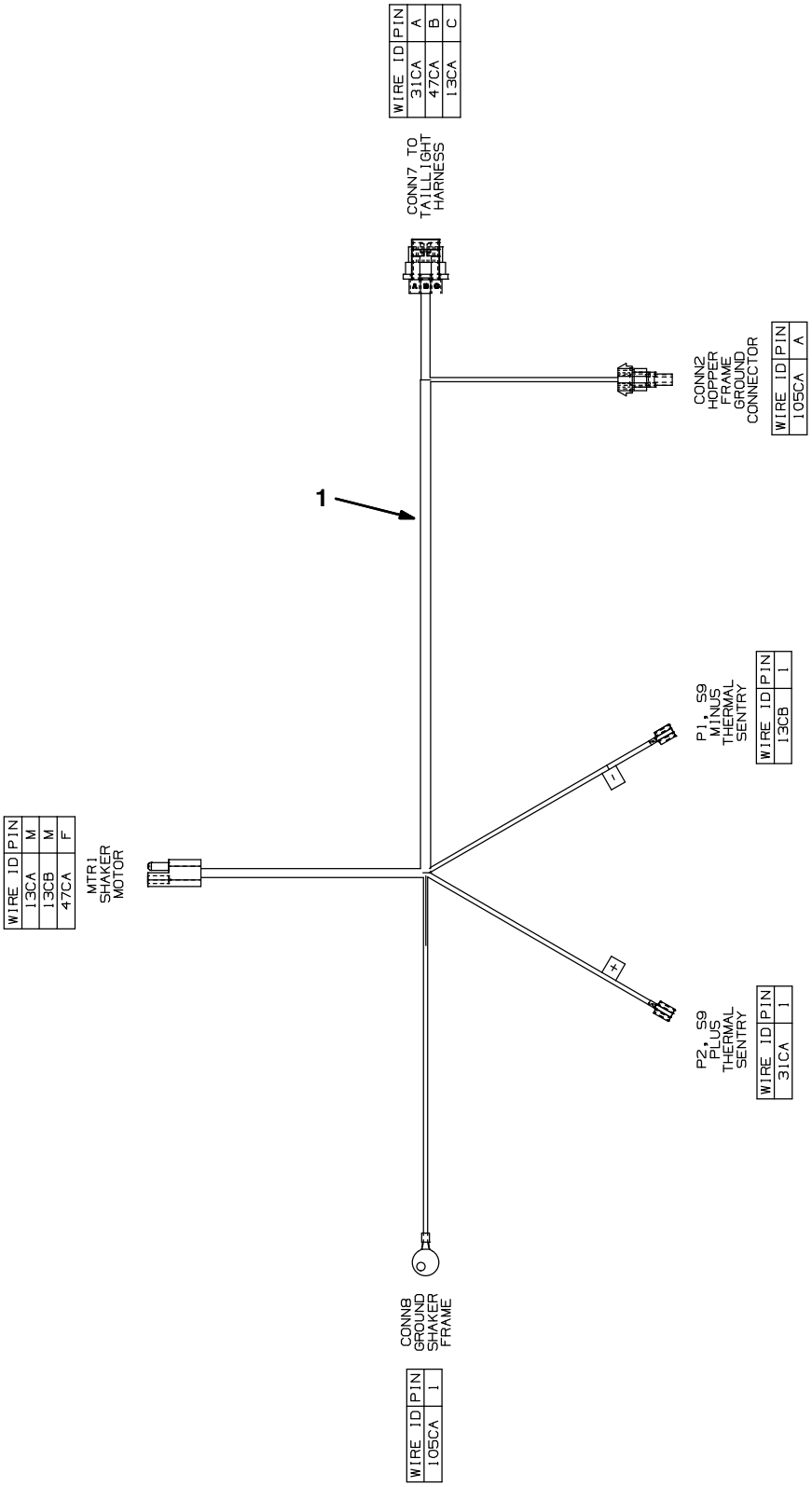

Fig. 71 – Electrical Wire Harness Group, Hopper Cover

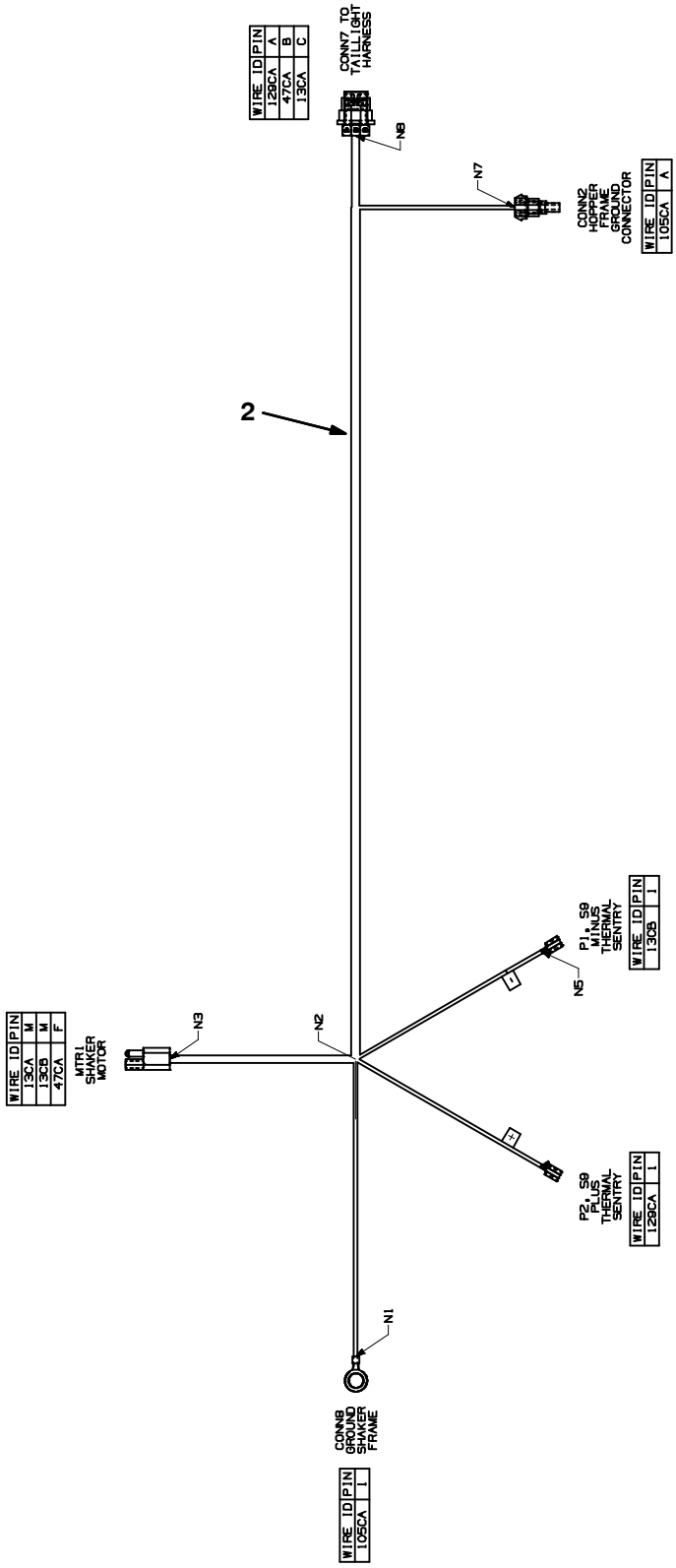

354389–354459

Ref.	Part No.	Serial Number	Description	Qty.
1	1019950	(000000–003478)	Harness, Hppr, Cover [M20]	1
2	1064370	(003479–)	Harness, Hppr, Cover [M20]	1

Fig. 72 – Electrical Wire Harness Group, Diesel Engine

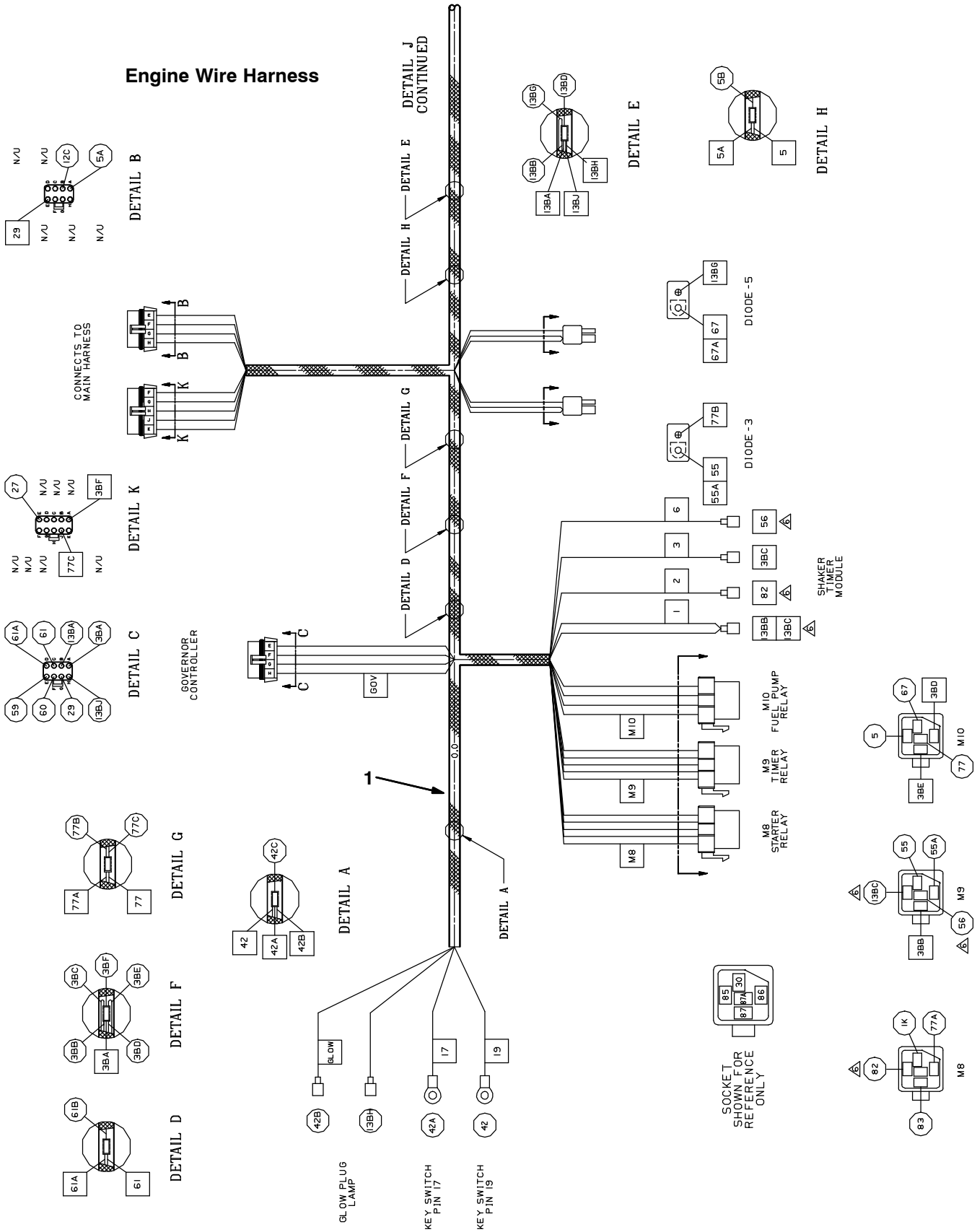

Fig. 72 – Electrical Wire Harness Group, Diesel Engine

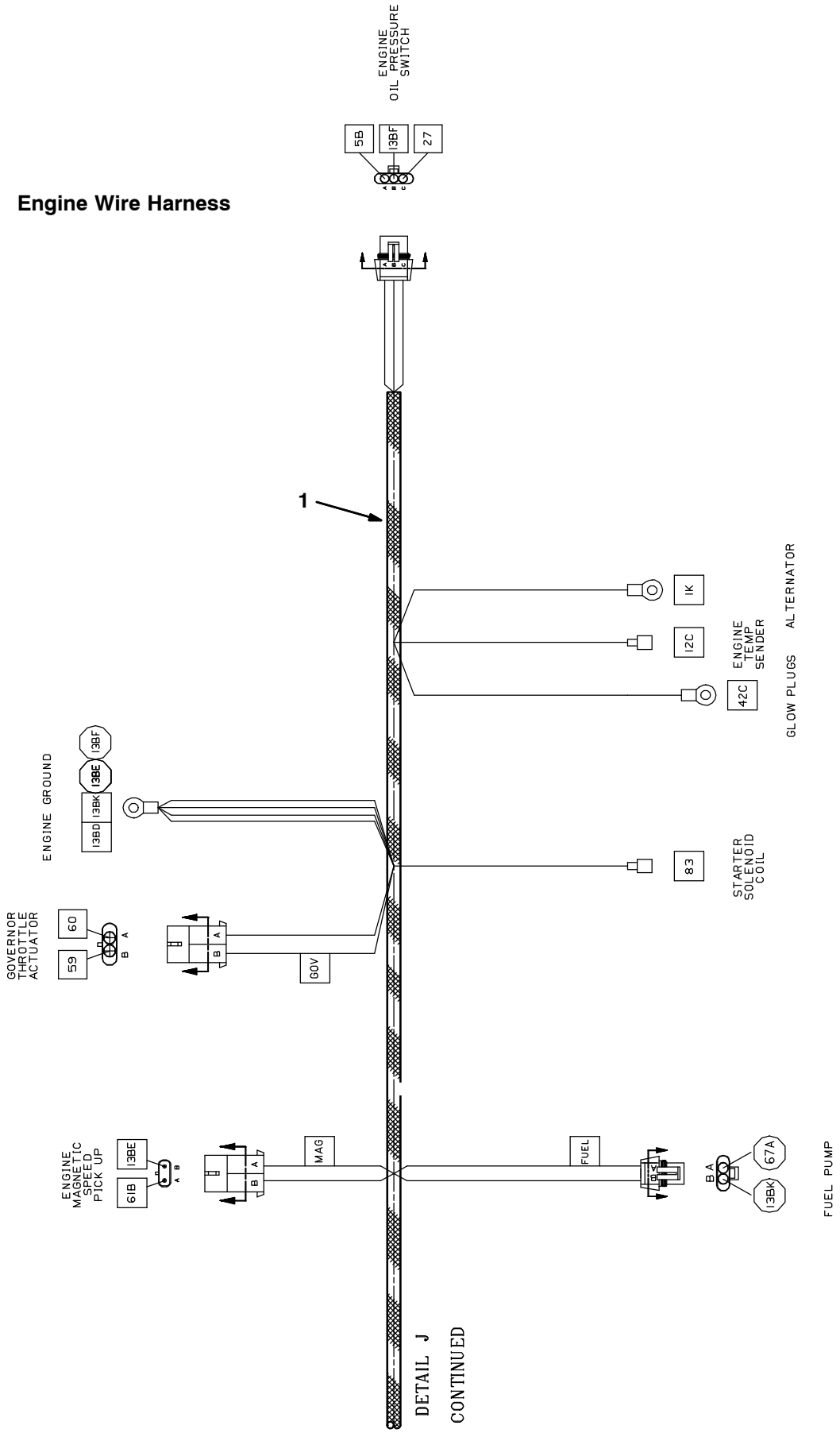

354389

Fig. 72 – Electrical Wire Harness Group, Diesel Engine

Ref.	Part No.	Serial Number	Description	Qty.
1	391969	(000000–)	Harness, Engine, Dsl [M20 T20]	1

Fig. 73 – Label Group

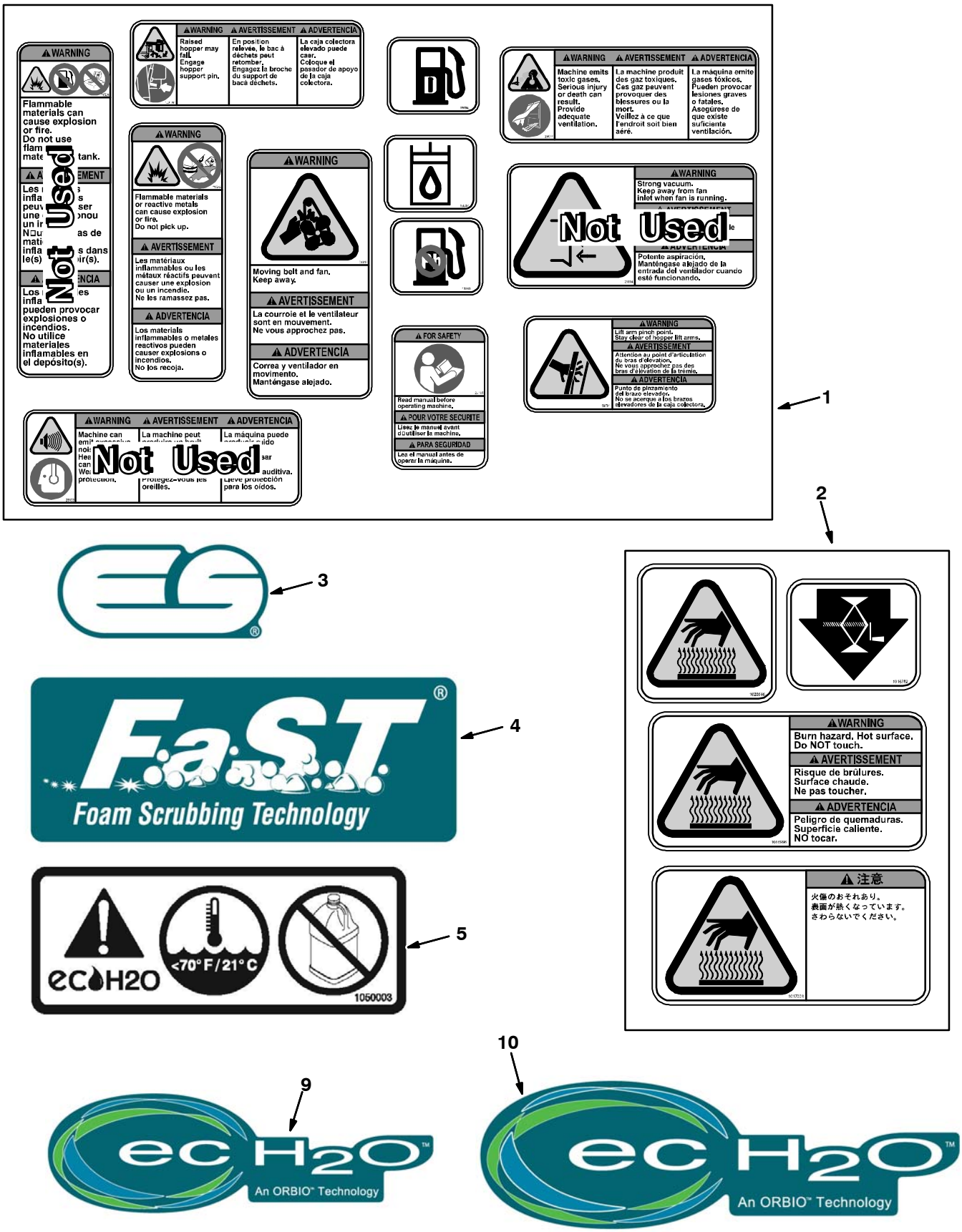

Fig. 73 – Label Group

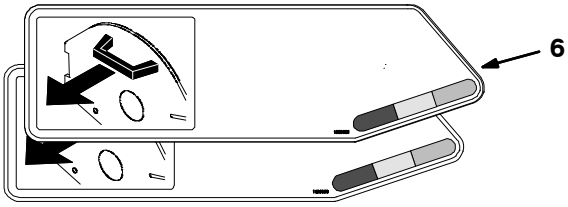

M20 – D

Ref.	Part No.	Serial Number	Description	Qty.
1	77221	(000000–)	Label Set, Info/Hzrd, Swpr / Scrbr	1
2	1017141	(000000–)	Label Set, Hi Temp	1
3	1065343	(000000–)	Label, Logo, 05.75L 2Color [ES]	3
4	1065342	(000000–)	Label, Logo, 07.95L 2Color [FaST]	3
5	1050003	(000000–)	Label [User, Attention, ec–H2O]	2
6	1031017	(000000–)	Label Set, Brush Indicator & Removal	1
7	1032450	(000000–)	Label Set, Info/Hzrd, Swpr / Scrbr, Tj (Japan Only)	1
8	1064662	(000000–)	Label, Model, 2Color [M20]	2
9	1062813	(000000–)	Label, Logo, 12.3L 4Color [ec–H2O]	1
10	1064440	(000000–)	Label, Logo, 16.9L 4Color [ec–H2O]	1

SECTION 3

Contents **Page**

Fig. 1 – ES Pump Group 3-2
Fig. 2 – ES Tanks Group 3-4
Fig. 3 – Side Brush Motor Group (000000–003076) 3-6
Fig. 4 – Side Brush Motor Group (003077–) 3-8
Fig. 5 – Side Brush Lift Group 3-10
Fig. 6 – Side Brush Solution Control Group . . . 3-12
Fig. 7 – Side Brush Hydraulic Valve Group 3-14
Fig. 8 – Side Brush Hydraulic Hose Group 3-16
Fig. 9 – FaST Solution Pump Group (000000–002532) 3-18
Fig. 10 – FaST Air Pump and Detergent Group (000000–002532) 3-20
Fig. 11 – FaST Foam Filter Group (000000–002532) 3-22
Fig. 12 – FaST Foam Filter Group, Side Brush (000000–002532) 3-24
Fig. 13 – FaST Wire Harness Group (000000–002532) 3-26
Fig. 14 – FaST Pumps and Detergent Group (002533–) 3-28
Fig. 15 – FaST Solution Supply Group (002533–) 3-30
Fig. 16 – FaST Solution Supply Group with Side Brush (002533–) 3-32
Fig. 17 – FaST Wire Harness Group (002533–) 3-34
Fig. 18 – ec–H20 Solution Pump Group 3-36
Fig. 19 – ec–H20 Solution Pump Supply Group . 3-38
Fig. 20 – ec–H20 Solution Supply Group 3-40
Fig. 21 – ec–H20 Solution Supply Group with Side Brush 3-42
Fig. 22 – ec–H20 Wire Harnesses Group 3-44
Fig. 23 – Backup Alarm Kit 3-47
Fig. 24 – Light Kit, Flashing 3-48
Fig. 25 – Light Kit, Revolving 3-50
Fig. 26 – Light Kit, Flashing Overhead Guard . . 3-52
Fig. 27 – Light Kit, Revolving Overhead Guard . 3-53
Fig. 28 – Overhead Guard Kit 3-54
Fig. 29 – Telemetry Group 3-56
Fig. 30 – Telemetry Wire Harness Group 3-58
Fig. 31 – Vacuum Wand Kit (000000–002406) . . 3-60
Fig. 32 – Vacuum Wand Kit (002407–) . . . 3-62
Fig. 33 – Spray Nozzle Kit 3-64
Fig. 34 – Transport Kit 3-66
Fig. 35 – Squeegee Guard Kit 3-68
Fig. 36 – Fire Extinguisher Kit 3-70
Fig. 37 – Documentation Group 3-71

Fig. 1 – ES Pump Group

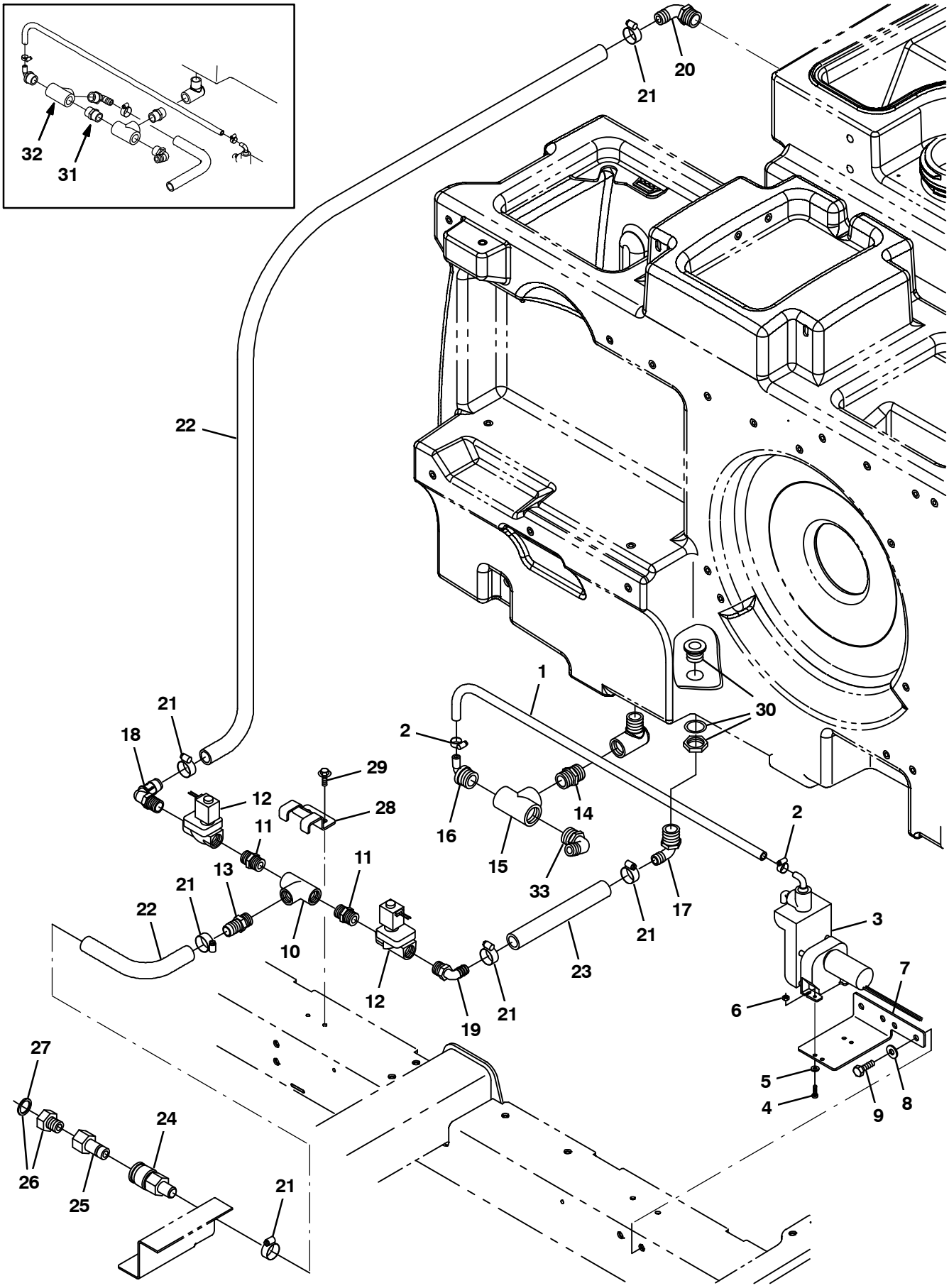

354461

Fig. 1 – ES Pump Group

	Ref.	Part No.	Serial Number	Description	Qty.
	1	41295	(000000–)	Hose, Pvc, Clr, 0.38id 0.56od 48.00l	1
	2	43844	(000000–)	Clamp, Hose, Wormdrive, 0.25–0.62d, .31w	2
	3	73260	(000000–)	Pump, Detgt, 14vdc, 150ml/Min 20psi (See Breakdowns)	1
	4	24265	(000000–)	Screw, Pan, M4 X 0.7 X 16, Ss	2
	5	01683	(000000–)	Washer, Flat, #10, Ss	2
	6	33932	(000000–)	Nut, Hex, Lock, M4 X 0.7, Nl, Ss	2
	7	1021325	(000000–)	Bracket, Mtg, Valve	1
	8	01685	(000000–)	Washer, Flat, 0.31, Ss	2
	9	09740	(000000–)	Screw, Hex, M8 X 1.25 X 20, Ss	2
	10	79497	(000000–)	Fitting, Plstc, Tee, Pf08/Pf08/Pf08	1
	11	86508	(000000–)	Fitting, Plstc, Str, Pm08/Pm08	2
	12	73433	(000000–)	Valve, Water, Solenoid, 12vdc 0.08pf	2
	13	78398	(000000–)	Fitting, Plstc, Str, Bm12/Pm08, Nyl	1
	14	24544	(000000–)	Fitting, Plstc, Str, Pm12/Pm12 1.60l	1
	15	42133A	(000000–)	Fitting, Plstc, Tee, Pf12/Pf12/Pf12	1
	16	79484	(000000–)	Fitting, Plstc, E90, Bm06/Pm12, Nyl	1
	17	73468	(000000–)	Fitting, Plstc, E90, Bm10/Pm12	1
	18	63244–2	(000000–)	Fitting, Plstc, E90, Bm12/Pm08	1
	19	630371	(000000–)	Fitting, Plstc, E90, Bm10/Pm08	1
	20	14877	(000000–)	Fitting, Plstc, E90, Bm12/Pm12	1
	21	63810	(000000–)	Clamp, Hose, Wormdrive, 0.56–1.06d, .56w	6
	22	1015045	(000000–)	Hose, Afmkt, Pvc, Brd 0.75id 08ft	1
	23	369811	(000000–)	Hose, Pvc, Brd, 0.62id 0.88od 09.00l	1
	24	24105	(000000–)	Fitting, Brs, Qdc, Bm12/Qf08	1
	25	33295	(000000–)	Fitting, Brs, Qdc, Pf08 [Parker Bh3f]	1
▽	26	375322	(000000–)	Fitting Kit, Hose, Garden	1
▲	27	01316	(000000–)	Washer, Flat, 0.66b 1.00d .12, Rbr	1
	28	1016837	(000000–)	Bracket, Mtg, Valve	1
	29	361339	(000000–)	Screw, Hex, M6 X 1.0 X 16, Fmg	2
	30	377349	(xxxxxx–)	Fitting, Plstc, Pf12/Pf12, Bh	1
	31	24544	(000000–xxxxxx)	Fitting, Plstc, Str, Pm12/Pm12 1.60l	1
	32	42133A	(000000–xxxxxx)	Fitting, Plstc, Tee, Pf12/Pf12/Pf12	1
	33	14877	(000000–007259)	Fitting, Plstc, E90, Bm12/Pm12	1
	33	73468	(007260–)	Fitting, Plstc, E90, Bm10/Pm12	1

Fig. 2 – ES Tanks Group

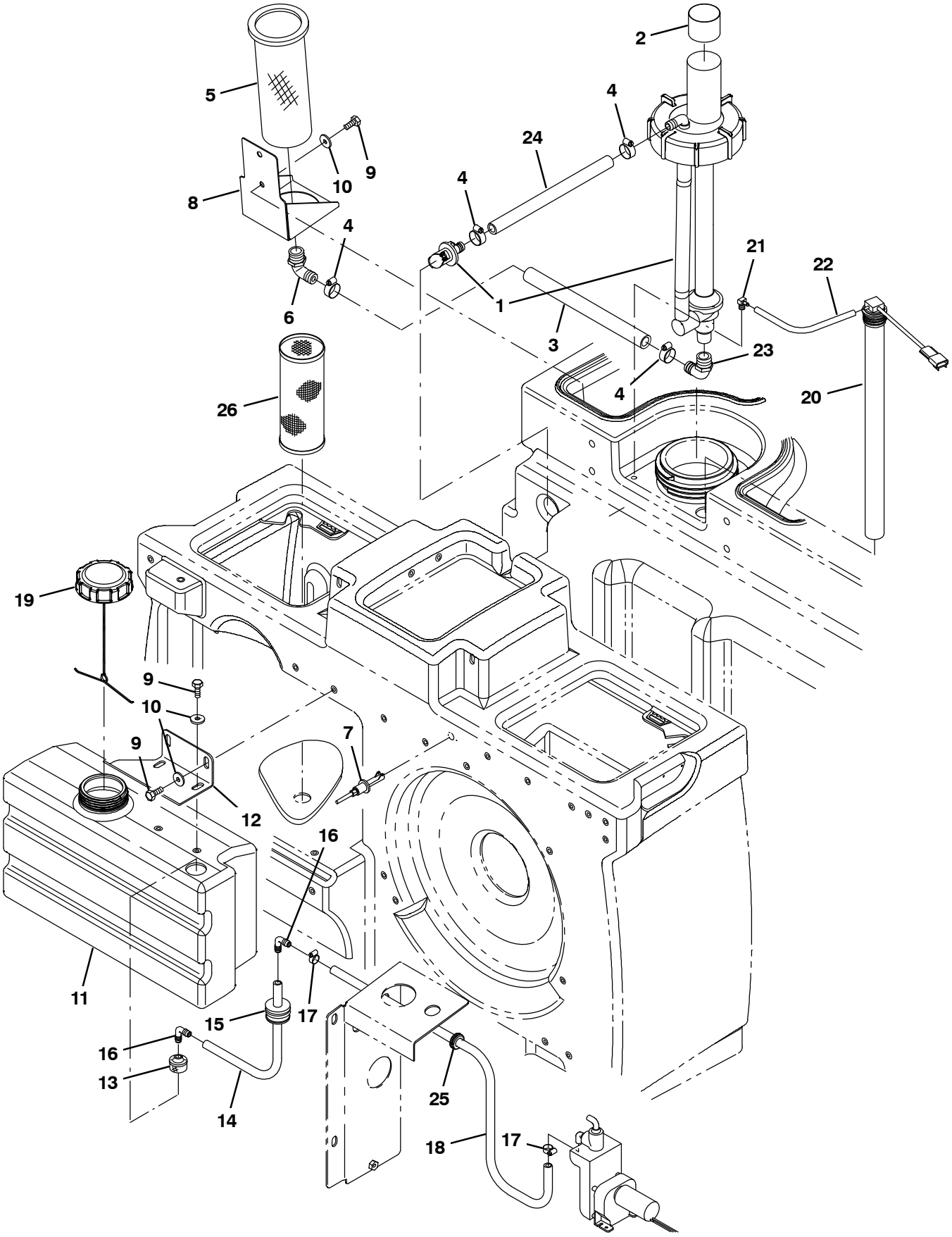

354462

Fig. 2 – ES Tanks Group

Ref.	Part No.	Serial Number	Description	Qty.
1	1021210	(000000–)	Pump Assy, Column, Es (See Breakdowns)	1
2	1028697	(000000–)	Sleeve, Rbr, 3.50b 3.58d 1.8l	1
3	1015048	(000000–)	Hose, Afmkt, Pvc, Brd 0.75id 01ft	1
4	63810	(000000–)	Clamp, Hose, Wormdrive, 0.56–1.06d, .56w	4
5	386652	(000000–)	Strainer, Soltn, 20 Mesh, Cyl 3.5d 9.5l	1
6	24543	(000000–)	Fitting, Plstc, E90, Bm12/Pf12	1
7	385685	(000000–)	Sensor, Level, Liq, 14vdc 01a .62–11	1
8	1019636	(000000–)	Bracket, Mtg, Strainer	1
9	09740	(000000–)	Screw, Hex, M8 X 1.25 X 20, Ss	6
10	1017218	(000000–)	Washer, Flat, 0.32b 1.00d .12, Ss	6
11	1022229	(000000–)	Tank, Detgt, Trimmed	1
12	1025159	(000000–)	Bracket, Mtg, Detgt And Spray Wand	1
13	20952	(000000–)	Screen, Pump	1
14	1014974	(000000–)	Hose, Afmkt, Pvc, Brd 0.38id 02ft	1
15	20944	(000000–)	Grommet, Pye, 0.37id, F/1.5h, .13 Matl	1
16	20951	(000000–)	Fitting, Plstc, E90, Bm06/Bm06	2
17	43844	(000000–)	Clamp, Hose, Wormdrive, 0.25–0.62d, .31w	2
18	41295	(000000–)	Hose, Pvc, Clr, 0.38id 0.56od 48.00l	1
19	1011885	(000000–)	Cap, Tank	1
20	1072877	(000000–)	Switch Assy, Press, 3.0, 17.5l Tube	1
21	32183	(000000–)	Fitting, Brs, E90, Pm02/Bm03	1
22	1031572	(000000–)	Hose, Afmkt, Vacuum, 0.16id, 01ft	1
23	14877	(000000–)	Fitting, Plstc, E90, Bm12/Pm12	1
24	1015033	(000000–)	Hose, Afmkt, Pvc, Brd 0.62Id, 01Ft, Clr	1
25	10632–2	(000000–)	Grommet, Rbr, 0.62id, F/0.9h, .12 Matl	1
26	1039019	(000000–)	Filter, Soltn, 020mesh, Pm12 3.2d 08.0l	1

Fig. 3 – Side Brush Motor Group (000000–003076)

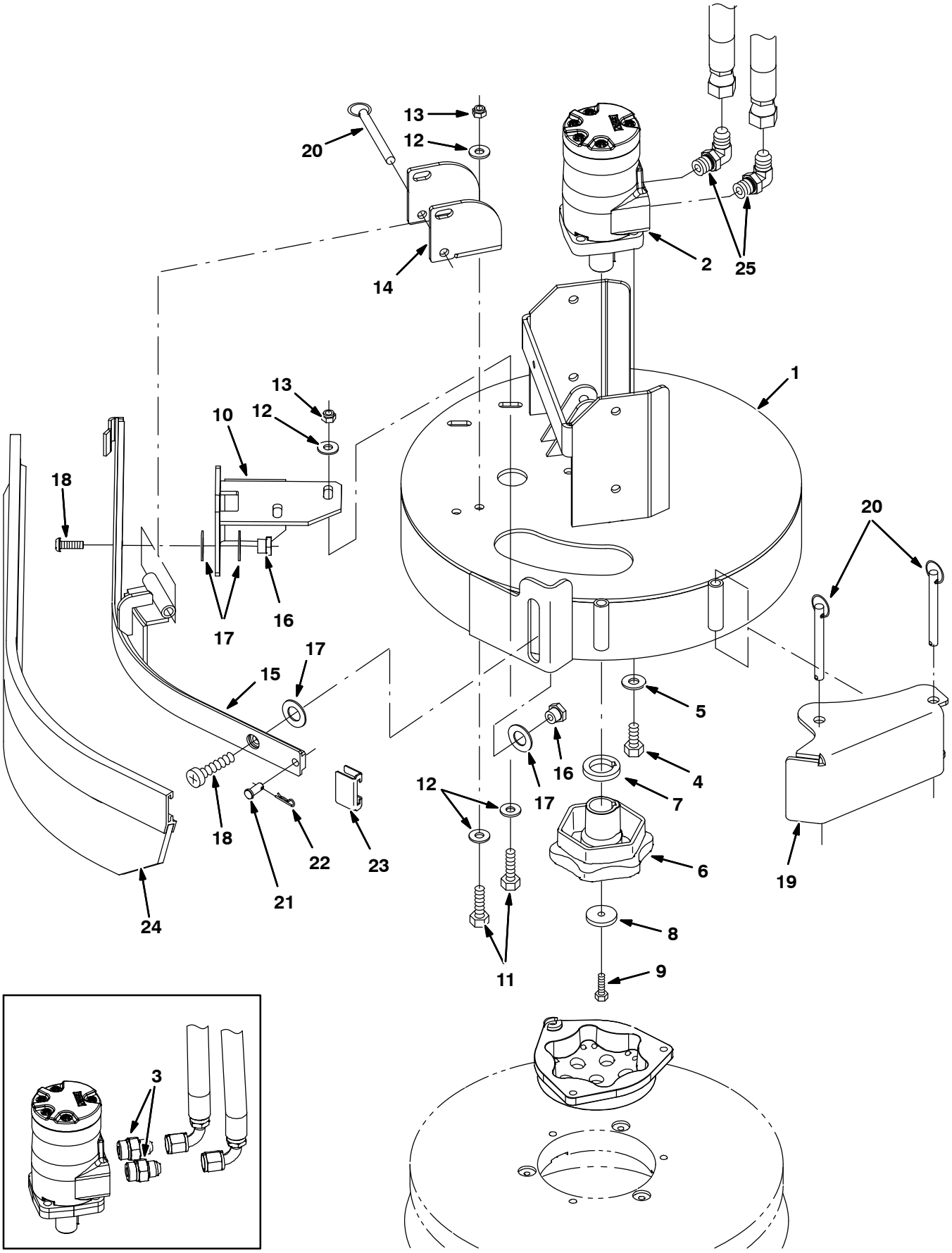

354463

Fig. 3 – Side Brush Motor Group (000000–003076)

Ref.	Part No.	Serial Number	Description	Qty.
1	1021794	(000000–003076)	Bracket Wldt, Mtg, Side Brush	1
2	1029379	(000000–003076)	Motor, Hyd, Gear, Int 08.9 Bi–Dir 2500 (See Breakdowns)	1
3	56692	(000000–001337)	Fitting, Hyd, Str, Jm08/Om10	2
4	01762	(000000–003076)	Screw, Hex, .38–16 X 0.75, Nl	4
5	32492	(000000–003076)	Washer, Flat, 0.38 Std	4
6	1042968	(000000–003076)	Hub, Drive, Brush, Disk, 1.00b [6t]	1
7	25611	(000000–003076)	Spacer, Hub, Keyed	1
8	19191	(000000–003076)	Spacer	1
9	25046	(000000–003076)	Screw, Hex, .25–20 X 1.00, 5	1
10	1022135	(000000–003076)	Bracket, Mtg, Sqge	1
11	09010	(000000–003076)	Screw, Hex, M8 X 1.25 X 25, Ss	4
12	01685	(000000–003076)	Washer, Flat, 0.31, Ss	8
13	08713	(000000–003076)	Nut, Hex, Lock, M8 X 1.25, Nl, Ss	4
14	1022188	(000000–003076)	Bar, Retainer	1
15	1022111	(000000–003076)	Frame Wldt, Sqge, Side Brush	1
16	1022302	(000000–003076)	Nut, T, M8 X 1.25 X 14.5od X 9.5l	2
17	64425	(000000–003076)	Washer, Thrust, 0.61b 1.25d .06, Fgl	4
18	223470	(000000–003076)	Screw, Btn, M8 X 1.25 X 25, Ss	2
19	1022260	(000000–003076)	Bumper Wldt, Brush, Side	1
20	369359	(000000–003076)	Pin, Hitch, .375d X 3.12l, Pl	3
21	46800	(000000–003076)	Pin, Clevis, 0.31d X 0.75l	1
22	08179	(000000–003076)	Pin, Cotter, .094 X 1.00	1
23	86759	(000000–003076)	Retainer, Sqge	1
24	1025005	(000000–003076)	Squeegee Assy, Sba, Linatex	1
24	1027716	(000000–003076)	Squeegee Assy, Sba, Ure	1
25	56821	(001338–003076)	Fitting, Hyd, E90, Jm08/Om10	1

Fig. 4 – Side Brush Motor Group (003077–)

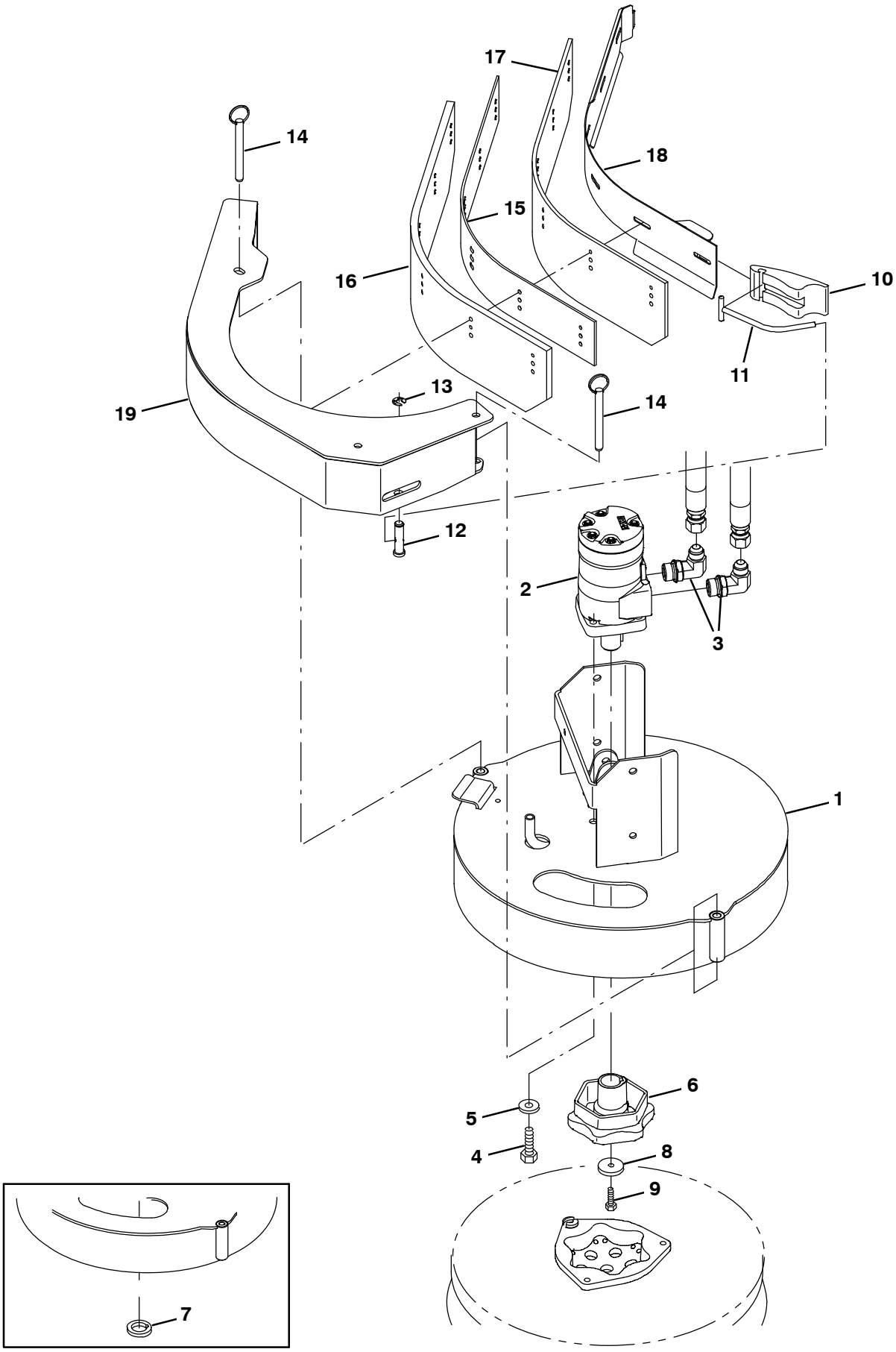

354463

Fig. 4 – Side Brush Motor Group (003077–)

	Ref.	Part No.	Serial Number	Description	Qty.
	1	1047002	(003077–)	Bracket Wldt, Mtg, Side Brush Fixed	1
	2	1029379	(003077–004189)	Motor, Hyd, Gear, Int 08.9 Bi–Dir 2500 (See Breakdowns)	1
▽	2	1068812	(004190–)	Motor, Hyd, Gear, Int 08.9 Bi–Dir 2500	1
▲		22615	(004190–)	Seal Kit, Motor [Cl]	1
	3	56821	(003077–)	Fitting, Hyd, E90, Jm08/Om10	2
	4	01762	(003077–)	Screw, Hex, .38–16 X 0.75, Nl	4
	5	32492	(003077–)	Washer, Flat, 0.38 Std	4
	6	1042968	(003077–)	Hub, Drive, Brush, Disk, 1.00b [6t]	1
	7	25611	(003077–004189)	Spacer, Hub, Keyed	1
	8	19191	(003077–)	Spacer	1
	9	25046	(003077–)	Screw, Hex, .25–20 X 1.00, 5	1
	10	21601	(003077–)	Cam, Front	1
	11	386298	(003077–)	Pin Wldt, Front	1
	12	21603	(003077–)	Pin, Grvd, 0.43d 01.8l [303ss]	1
	13	24555	(003077–)	Ring, Retaining, Ext, 0.38d, [E–Ring]	1
	14	369359	(003077–)	Pin, Hitch, .375d X 3.12l, Pl	2
	15	1046995	(003077–)	Spacer, Sqge, Side Brush, Rbr	1
	16	1046980	(003077–)	Blade, Sqge, Side Brush, Linatex	1
	16	1059091	(003077–)	Blade, Sqge, Side Brush, Urethane	1
	17	1047238	(003077–)	Blade, Sqge, Side Brush, Linatex	1
	17	1059092	(003077–)	Blade, Sqge, Side Brush, Urethane	1
	18	1047060	(003077–)	Plate Wldt, Retainer, Sqge	1
	19	1046976	(003077–)	Bumper Wldt, Brush, Side	1

Fig. 5 – Side Brush Lift Group

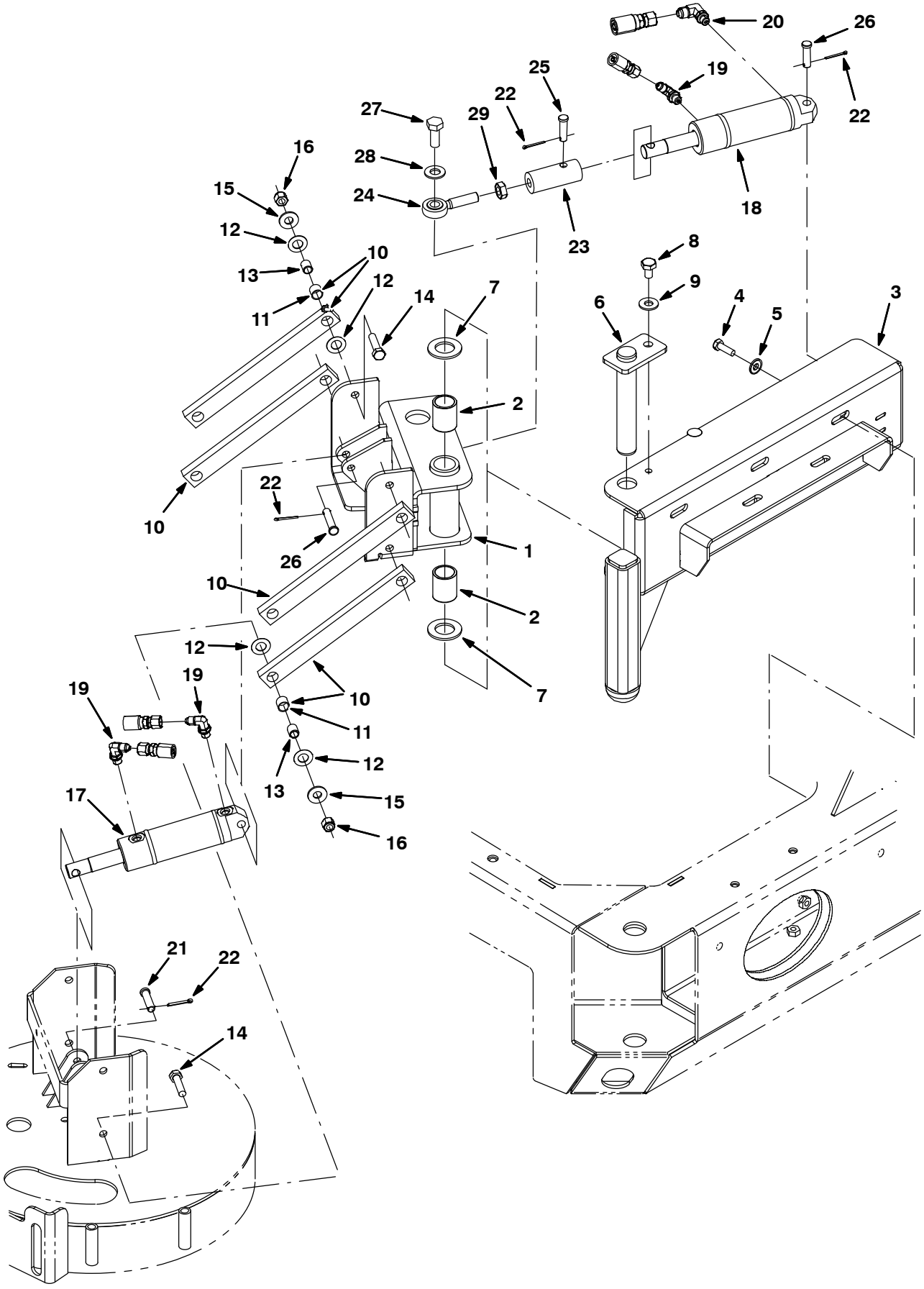

354464

Fig. 5 – Side Brush Lift Group

	Ref.	Part No.	Serial Number	Description	Qty.
	1	1021439	(000000–)	Pivot Wldt, Brush, Side	1
	2	71868	(000000–)	Bushing, Sleeve, 1.00b 1.13d 1.50l, Fgl	2
	3	1021473	(000000–)	Channel Wldt, Pivot	1
	4	09010	(000000–)	Screw, Hex, M8 X 1.25 X 25, Ss	5
	5	41186	(000000–)	Washer, Flat, Belleville, .31	5
	6	1021617	(000000–)	Pin Wldt	1
	7	71869	(000000–)	Washer, Thrust, 1.00b 1.75d 0.13w, Fbr	2
	8	16735	(000000–)	Screw, Hex, M8 X 1.25 X 16, 8.8	1
	9	32491	(000000–)	Washer, Flat, 0.31, Std	1
▽	10	63175–1	(000000–)	Arm, Link	4
▲	11	63233	(000000–)	Bushing, Sleeve, 0.50b 0.59d 0.50l, Bnz	2
	12	59633	(000000–)	Bearing, Thrust, 0.53b 1.00d 0.03w	16
	13	1027926	(000000–)	Sleeve, P/M, 0.37b 0.50d 0.6l [430ss]	8
	14	36845	(000000–)	Screw, Hex, .38–16 X 1.50, Ss	8
	15	01685	(000000–)	Washer, Flat, 0.31, Ss	8
	16	59156	(000000–)	Nut, Hex, Lock, .38–16, Nl, Ss	8
	17	1038137	(000000–)	Cylinder, Hyd, 1.5b 07.8l 02.80strk 2500	1
	18	1038115	(000000–)	Cylinder, Hyd, 1.5b 07.8l 02.75strk 2500	1
	19	77097	(000000–)	Fitting, Hyd, E90, Jm04/Om04	3
	20	77098	(000000–)	Fitting, Hyd, E90, Jm06/Om04	1
	21	29558	(000000–)	Pin, Clevis, 0.37d X 1.50l	1
	22	08179	(000000–)	Pin, Cotter, .094 X 1.00	4
	23	1021564	(000000–)	Adapter, Rod–End, Side Brush	1
	24	71874	(000000–)	Rod–End, .50–20rh Mal 0.50b	1
	25	29557	(000000–)	Pin, Clevis, 0.37d X 1.31l	1
	26	17461	(000000–)	Pin, Clevis, 0.37d X 1.75l	2
	27	41346	(000000–)	Screw, Hex, M12 X 1.75 X 30, 8.8	1
	28	32486	(000000–)	Washer, Flat, 0.50 Sae	1
	29	48985	(000000–)	Nut, Hex, Jam, .50–20	1

Fig. 6 – Side Brush Solution Control Group

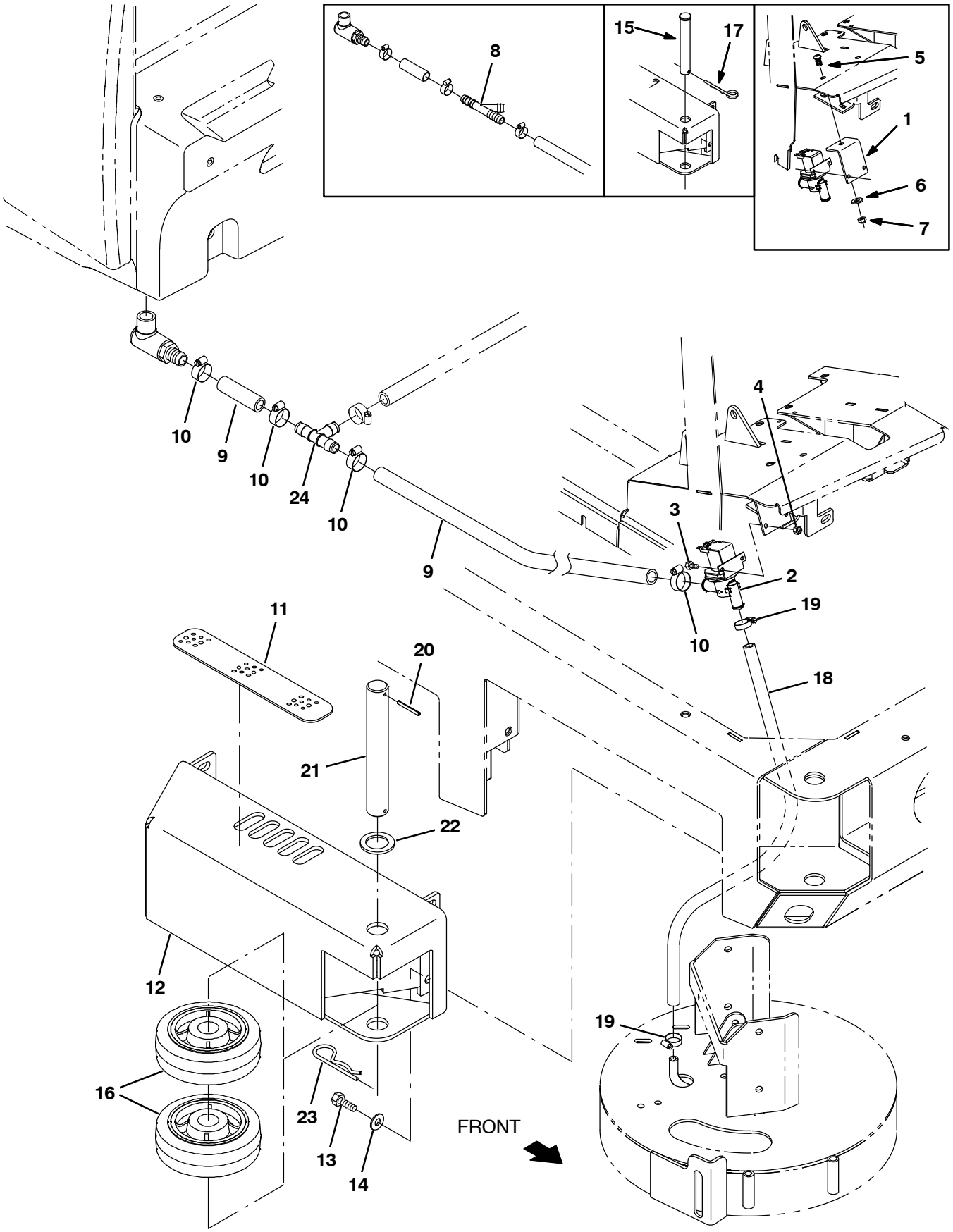

354465

Fig. 6 – Side Brush Solution Control Group

Ref.	Part No.	Serial Number	Description	Qty.
1	1040834	(000000–002241)	Angle, Mtg, Valve	1
2	1022106	(000000–)	Valve Assy, Water, Solenoid, 12vdc	1
3	09738	(000000–)	Screw, Hex, M5 X 0.8 X 12, Ss	2
4	09739	(000000–)	Nut, Hex, Lock, M5 X 0.8, Nl, Ss	2
5	17284	(000000–002241)	Screw, Btn, M8 X 1.25 X 16, Ss	1
6	32491	(000000–002241)	Washer, Flat, 0.31, Std	1
7	08713	(000000–002241)	Nut, Hex, Lock, M8 X 1.25, Nl, Ss	1
8	393255	(000000–007259)	Fitting, Plstc, Tee, Bm12/Bm12/Bm12	1
9	1015045	(000000–007259)	Hose, Afmkt, Pvc, Brd 0.75id 08ft	1
9	1015032	(007260–)	Hose, Afmkt, Pvc, Brd 0.62id 08ft	1
10	63810	(000000–)	Clamp, Hose, Wormdrive, 0.56–1.06d, .56w	4
11	82839	(000000–)	Tread, Non–Skid, 02.2w 11.5l	1
12	1022318	(000000–)	Guard Wldt, Brush, Side	1
13	12317	(000000–)	Screw, Hex, M10 X 1.5 X 30, Ss	4
14	01686	(000000–)	Washer, Flat, 0.44b 1.00d .08, Ss	4
15	9006334	(000000–003062)	Pin Kit, Wheel, Ci [M20/T20/M30]	1
16	1060130	(000000–)	Wheel, 06.0D 2.00W 1.19B, Gray Rbr	2
17	761490	(000000–003062)	Pin, Cotter, Hair, Dbl	1
18	50178	(000000–)	Hose, Pvc, Clr, 0.50id 0.69od 26.00l	1
19	54333	(000000–)	Clamp, Hose, Wormdrive, 0.31–0.88d, .31w	2
20	23146	(003063–)	Pin, Roll, .187d X 1.62l, .187/.192	1
21	1053838	(003063–)	Pin, 30mmd X 215mml	1
22	47719	(003063–)	Washer, Flat, 1.26b 1.88d .13, Stl	1
23	34411	(003063–)	Pin, Cotter, Hair, 1.00d .178 Wir	1
24	1062116	(007260–)	Fitting, Plstc, Tee, Bm10/Bm10/Bm10, Nyl	1

Fig. 7 – Side Brush Hydraulic Valve Group

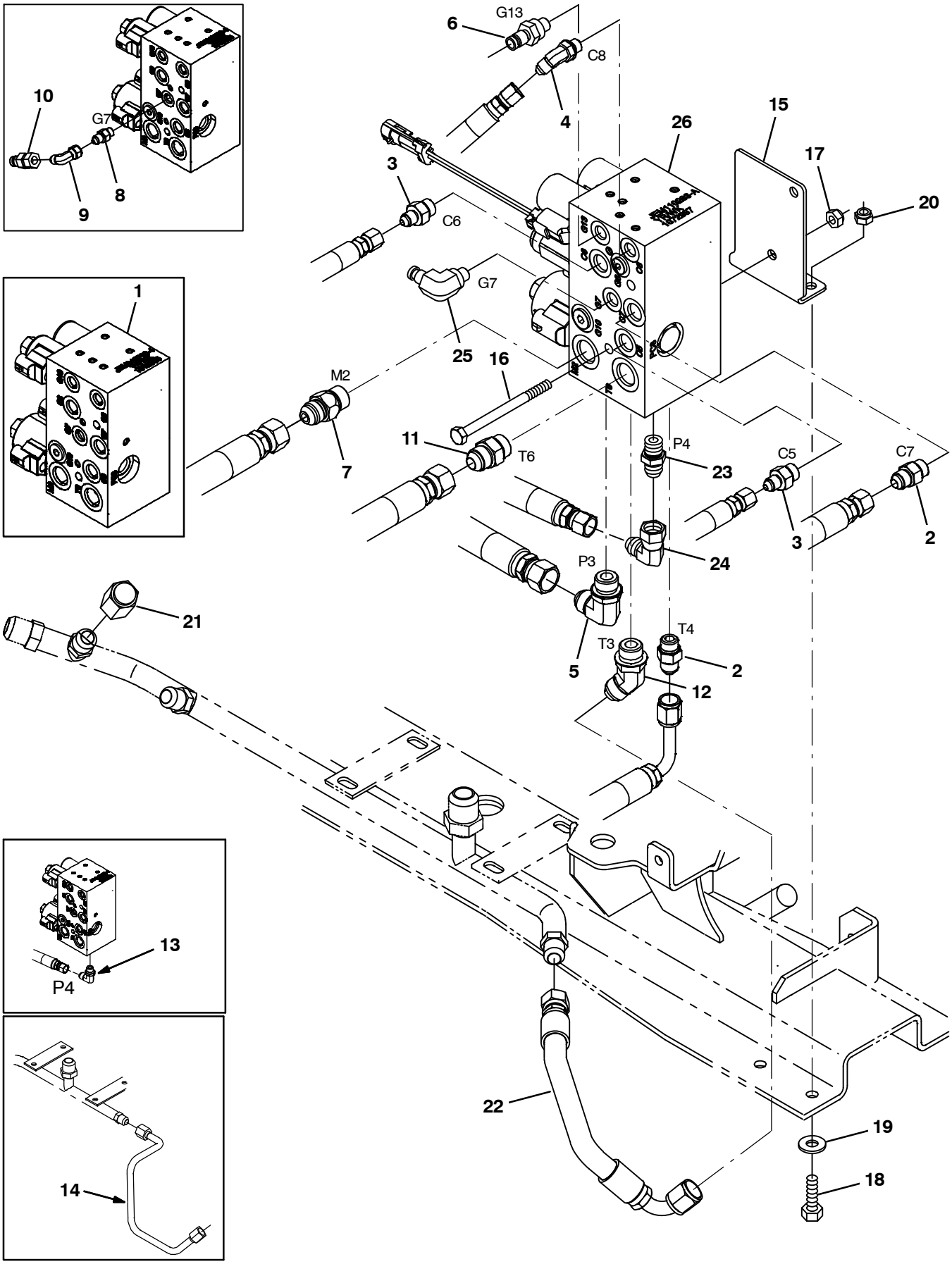

354466

Fig. 7 – Side Brush Hydraulic Valve Group

Ref.	Part No.	Serial Number	Description	Qty.
1	1018938	(000000–002015)	Valve, Cntrl, Hyd [M20 And T20] (See Breakdowns)	1
1	1037805	(002016–006286)	Valve, Hyd, Solenoid 12vdc 3000psi (See Breakdowns)	1
2	56690	(000000–)	Fitting, Hyd, Str, Jm06/Om06	2
3	55685	(000000–)	Fitting, Hyd, Str, Jm04/Om06	2
4	34359	(000000–)	Fitting, Hyd, E45, Jm04/Om04	1
5	44868	(000000–)	Fitting, Hyd, E90, Jm08/Om08	1
6	395973	(000000–)	Fitting, Hyd, Str, Om04/Qm04	1
7	1026119	(000000–)	Valve, Hyd, Check, Jm08/Om08 5000psi	1
8	55586	(000000–002951)	Fitting, Hyd, Str, Jm04/Om04	1
9	39210	(000000–002951)	Fitting, Hyd, E90, Jf04/Jm04	1
10	396476	(000000–002951)	Fitting, Hyd, Str, Jf04/Qm04	1
11	44869	(000000–)	Fitting, Hyd, Str, Jm08/Om08	1
12	42226	(000000–)	Fitting, Hyd, E45, Jm08/Om08	1
13	56820	(000000–002015)	Fitting, Hyd, E90, Jm06/Om06	1
14	1025405	(000000–001357)	Tube, Hyd, 08 Jf08/Jf08	1
15	1045272	(000000–)	Bracket, Valve, Sba [M20 And T20]	1
16	364441	(000000–)	Screw, Hex, M8 X 1.25 X 110, Ss	2
17	08709	(000000–)	Nut, Hex, Lock, M8 X 1.25, Nl	2
18	09010	(000000–)	Screw, Hex, M8 X 1.25 X 25, Ss	2
19	32491	(000000–)	Washer, Flat, 0.31, Std	2
20	08713	(000000–)	Nut, Hex, Lock, M8 X 1.25, Nl, Ss	2
21	60090	(000000–)	Fitting, Hyd, Cap, Jf08	1
22	1037011	(001358–)	Hose, Hyd, Tc08, Jf08str/Jf08e90, 012.0	1
23	56690	(002016–)	Fitting, Hyd, Str, Jm06/Om06	1
24	47504	(002016–)	Fitting, Hyd, E90, Jf06/Jm06	1
25	395974	(002952–)	Fitting, Hyd, E90, Om04/Qm04	1
26	1072997	(006287–)	Valve, Cntrl, Hyd, Solenoid, 03/16gpm (See Breakdowns)	1

Fig. 8 – Side Brush Hydraulic Hose Group

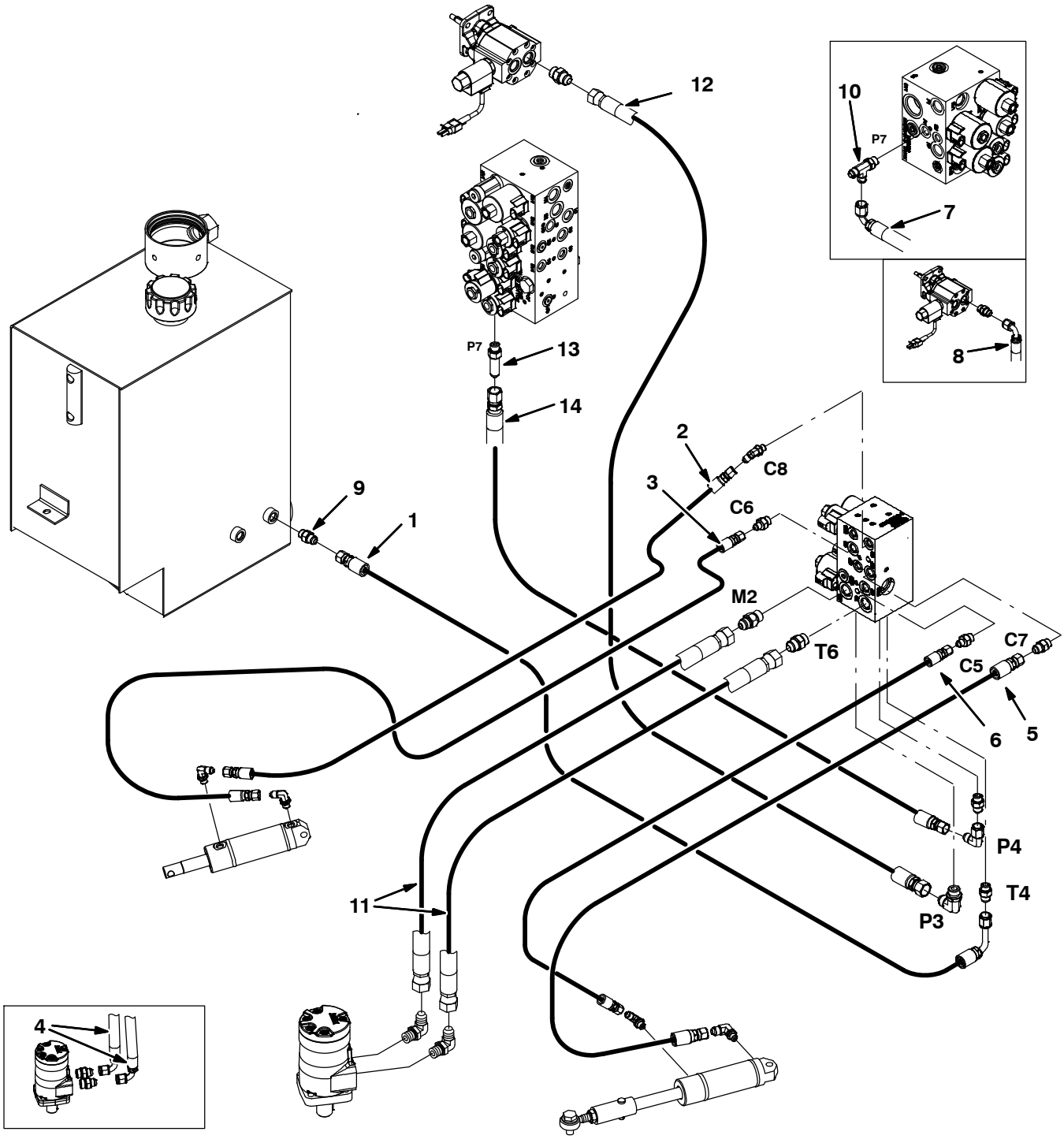

354467

Fig. 8 – Side Brush Hydraulic Hose Group

Ref.	Part No.	Serial Number	Description	Qty.
1	361047	(000000–)	Hose, Hyd, Med06, Jf06e90l/Jf06str,038.0	1
2	1023485	(000000–)	Hose, Hyd, Tc06, Jf06str/Jf06str, 033.0	1
3	1025990	(000000–)	Hose, Hyd, Tc04, Jf04str /Jf04str, 39.0	1
4	1023486	(000000–001337)	Hose, Hyd, Tc08, Jf08e90/Jf08str, 034.0	2
5	1025991	(000000–)	Hose, Hyd, Tc06, Jf06str /Jf06str, 23.0	1
6	1025992	(000000–)	Hose, Hyd, Tc04, Jf04str /Jf04str, 20.0	1
7	1025445	(000000–002699)	Hose, Hyd, Tc06, Jf06str /Jf06e90, 74.0	1
8	365004	(000000–001337)	Hose, Hyd, Tc08, Jf08e90/Jf08str, 056.0	1
9	56690	(000000–)	Fitting, Hyd, Str, Jm06/Om06	1
10	76316	(000000–002699)	Fitting, Hyd, Tee, Jm06/Jm06/Om06, Run	1
11	1036965	(001338–)	Hose, Hyd, Tc08, Jf08str/Jf08str, 034.0	1
12	1036944	(001338–005999)	Hose, Hyd, Tc08, Jf08str/Jf08str, 056.0	1
12	1036946	(006000–)	Hose, Hyd, Tc08, Jf08str/Jf08str, 084.0	1
13	59577	(002700–)	Fitting, Hyd, Str, Jm06/Om06, Long	1
14	377236	(002700–005999)	Hose, Hyd, Tc06, Jf06Str/Jf06Str, 062.0	1
14	1041389	(006000–)	Hose, Hyd, Tc06, Jf06str/Jf06str, 086.0	1

Fig. 9 – FaST Solution Pump Group (000000–002532)

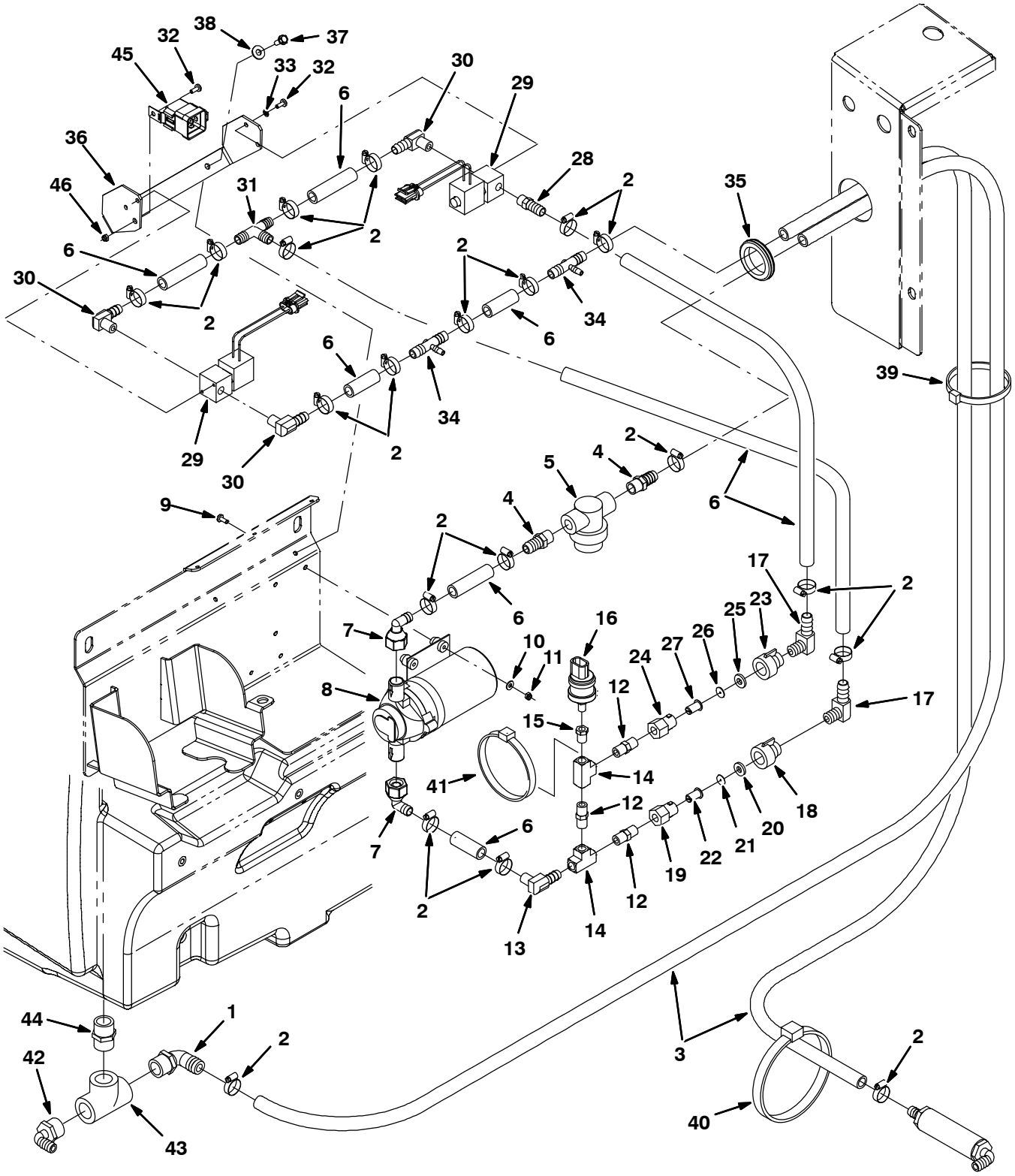

354468

Fig. 9 – FaST Solution Pump Group (000000–002532)

	Ref.	Part No.	Serial Number	Description	Qty.
	1	1005552	(000000–002532)	Fitting, Plstc, E90, Bm08/Pm12, Nyl	1
	2	54333	(000000–002532)	Clamp, Hose, Wormdrive, 0.31–0.88d, .31w	1
	3	1011412	(000000–002532)	Hose, Afmkt, Pvc, Brd 0.50id 08ft	1
	4	64743	(000000–002532)	Fitting, Plstc, Str, Bm08/Pm06	2
	5	1005302	(000000–002532)	Filter, In–Line, Pf06/Pf06, 80 Mesh	1
	6	1006401	(000000–002532)	Hose, Afmkt, Pvc, Brd 0.50id 03ft	1
	7	1018499	(000000–002532)	Fitting, Plstc, E90, Bm08/Pf08s, Swivel	2
	8	1030878	(000000–002532)	Pump, Soltn, Ele, 12vdc [W/O Chk Valve]	1
	9	17185	(000000–002532)	Screw, Pan, M5 X 0.8 X 40, Ss	4
	10	01683	(000000–002532)	Washer, Flat, #10, Ss	4
	11	09739	(000000–002532)	Nut, Hex, Lock, M5 X 0.8, Nl, Ss	4
	12	398468	(000000–002532)	Fitting, Brs, Str, Pm04/Pm04	3
	13	1010836	(000000–002532)	Fitting, Brs, E90, Bm08/Pm04	1
	14	398474	(000000–002532)	Fitting, Brs, Tee, Pf04/Pf04/Pf04	2
	15	150100	(000000–002532)	Fitting, Brs, Str, Pf02/Pm04	1
	16	1028582	(000000–002532)	Switch, Press, 10psi, Spst	1
	17	1010836	(000000–002532)	Fitting, Brs, E90, Bm08/Pm04	2
▽		1030864	(000000–002532)	Fitting Assy, Orifice, 0.070b, Pf04/Pf04	1
▲	18	1005506	(000000–002532)	Fitting, Plstc, Cap, Spray, Pf04	1
▲	19	1005507	(000000–002532)	Fitting, Plstc, Body, Spray, Pf04	1
▲	20	1005508	(000000–002532)	Washer, Flat, 0.34b 0.75d .12 [Viton]	1
▲	21	1018883	(000000–002532)	Plate, Orifice, 0.070id	1
▲	22	1006447	(000000–002532)	Filter, Screen, 50 Mesh .59d .8l Ss	1
▽		1030863	(000000–002532)	Fitting Assy, Orifice, 0.093b, Pf04/Pf04	1
▲	23	1005506	(000000–002532)	Fitting, Plstc, Cap, Spray, Pf04	1
▲	24	1005507	(000000–002532)	Fitting, Plstc, Body, Spray, Pf04	1
▲	25	1005508	(000000–002532)	Washer, Flat, 0.34b 0.75d .12 [Viton]	1
▲	26	1018884	(000000–002532)	Plate, Orifice, 0.093id	1
▲	27	1006447	(000000–002532)	Filter, Screen, 50 Mesh .59d .8l Ss	1
	28	762249	(000000–002532)	Fitting, Brs, Str, Bm08/Pm04	1
	29	1018098	(000000–002532)	Valve, Water, 12vdc, 6.0mm, 04pf	2
	30	1010836	(000000–002532)	Fitting, Brs, E90, Bm08/Pm04	3
	31	63245–1	(000000–002532)	Fitting, Plstc, Tee, Bm08/Bm08/Bm08	1
	32	09200	(000000–002532)	Screw, Pan, M5 X 0.8 X 12, Ss	5
	33	07514	(000000–002532)	Washer, Lock, Int, #10, Ss	4
	34	1010684	(000000–002532)	Fitting, Plstc, Tee, Bm04/Bm08/Bm08, Br	2
	35	10632–19	(000000–002532)	Grommet, Rbr, 2.13id, F/2.5h, .12 Matl	1
	36	1026074	(000000–002532)	Plate, Hsng [FaST]	1
	37	361339	(000000–002532)	Screw, Hex, M6 X 1.0 X 16, Fmg	4
	38	32490	(000000–002532)	Washer, Flat, 0.25 Std	4
	39	49266	(000000–002532)	Tie, Cable, Nyl, 07.3l .19w 1.8 Max D	1
	40	763116	(000000–002532)	Tie, Cable, Nyl, 15.3l . W 4.5 Max D	1
	41	763114	(000000–002532)	Tie, Cable, 11.3l, 2.75d Max	1
	42	14877	(000000–002532)	Fitting, Plstc, E90, Bm12/Pm12	1
	43	42133A	(000000–002532)	Fitting, Plstc, Tee, Pf12/Pf12/Pf12	1
	44	24544	(000000–002532)	Fitting, Plstc, Str, Pm12/Pm12 1.60l	1
	45	56186	(000000–002532)	Relay, 12vdc, 40a, Spdt N/O	1
	46	09739	(000000–002532)	Nut, Hex, Lock, M5 X 0.8, Nl, Ss	1

Fig. 10 – FaST Air Pump and Detergent Group (000000–002532)

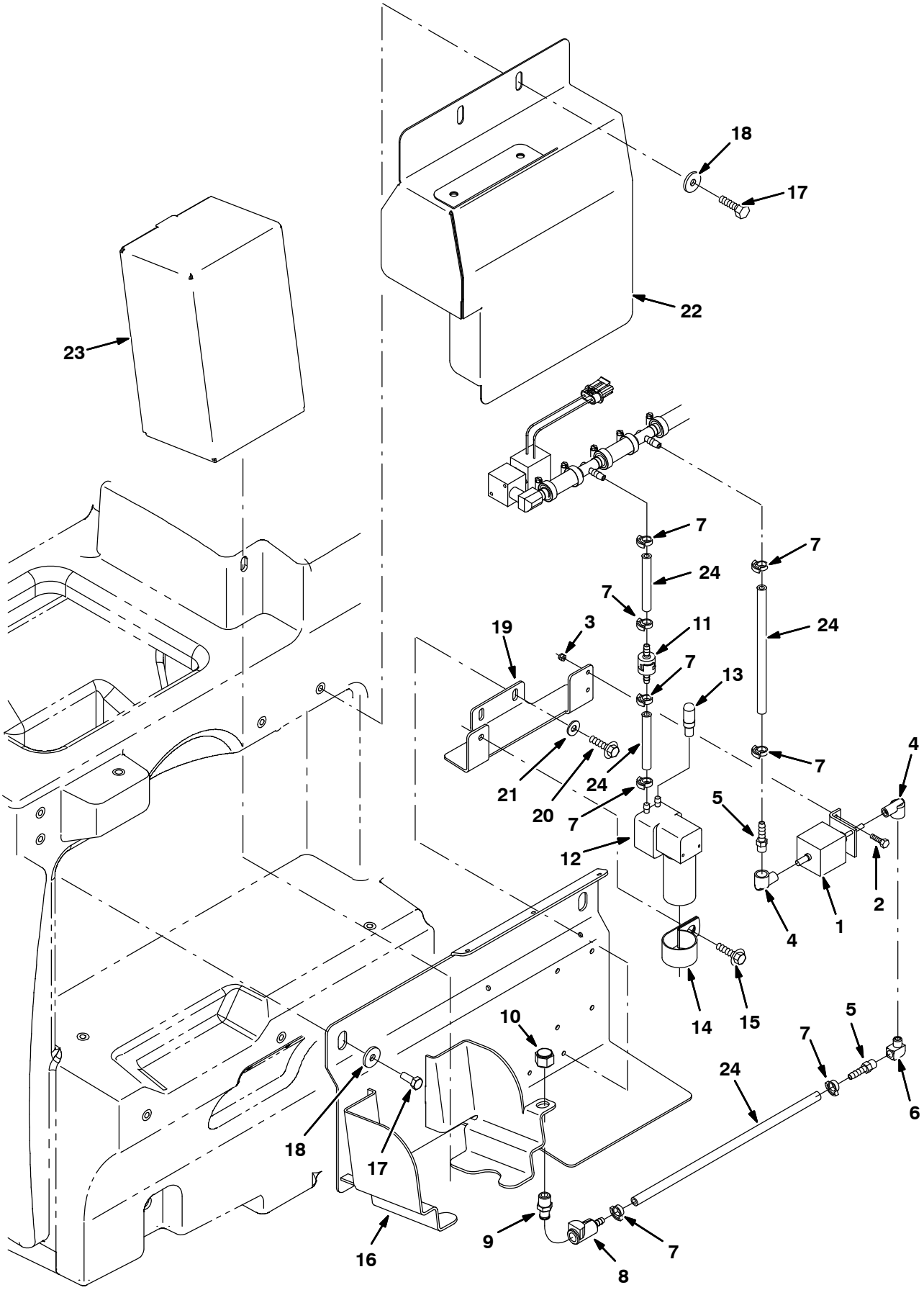

354469

Fig. 10 – FaST Air Pump and Detergent Group (000000–002532)

Ref.	Part No.	Serial Number	Description	Qty.
1	1018097	(000000–002532)	Pump, Detgt, 12vdc	1
2	09206	(000000–002532)	Screw, Hex, M4 X 0.7 X 12, 8.8	2
3	02850	(000000–002532)	Nut, Hex, Lock, M4 X 0.7, Nl	2
4	1014082	(000000–002532)	Fitting, Brs, E90, Cf03/Pf02	2
5	150525	(000000–002532)	Fitting, Brs, Str, Bm04/Pm02	2
6	11984	(000000–002532)	Fitting, Pipe, E90, Pf02/Pm02	1
7	1014575	(000000–002532)	Clamp, Hose, Plstc .351–.394 Id	8
8	1002898	(000000–002532)	Fitting, Plstc, Str, Bm04, Cplg, Fem	1
9	1002899	(000000–002532)	Fitting, Plstc, Str, Pm04, Cplg, Mal	1
10	1005435	(000000–002532)	Fitting, Plstc, Pipe, Cap, Pf04	1
11	1013902	(000000–002532)	Valve, Check, 0002psi Bm04/Bm04	1
12	1018780	(000000–002532)	Pump, Air, Ele, 12vdc	1
13	1005255	(000000–002532)	Filter Assy, Air, Mold, Ure	1
14	53466	(000000–002532)	Clamp, Cable, Stl, 1.50d X 1.00w, 1h	1
15	76099	(000000–002532)	Screw, Hex, M8 X 1.25 X 25, Fmg	1
16	1026067	(000000–002532)	Bracket Wldt, Mtg [FaST]	1
17	09740	(000000–002532)	Screw, Hex, M8 X 1.25 X 20, Ss	4
18	1017218	(000000–002532)	Washer, Flat, 0.32b 1.00d .12, Ss	4
19	1029118	(000000–002532)	Bracket, Mtg [FaST]	1
20	361339	(000000–002532)	Screw, Hex, M6 X 1.0 X 16, Fmg	2
21	32490	(000000–002532)	Washer, Flat, 0.25 Std	2
22	1033297	(000000–002532)	Cover Wldt [FaST]	1
23	1017022	(000000–002532)	Detergent Pkg, 2 Liter, Sgl [665]	1
24	1006415	(000000–002532)	Hose, Afmkt, Pvc, Clr 0.25id 03ft	1

Fig. 11 – FaST Foam Filter Group (000000–002532)

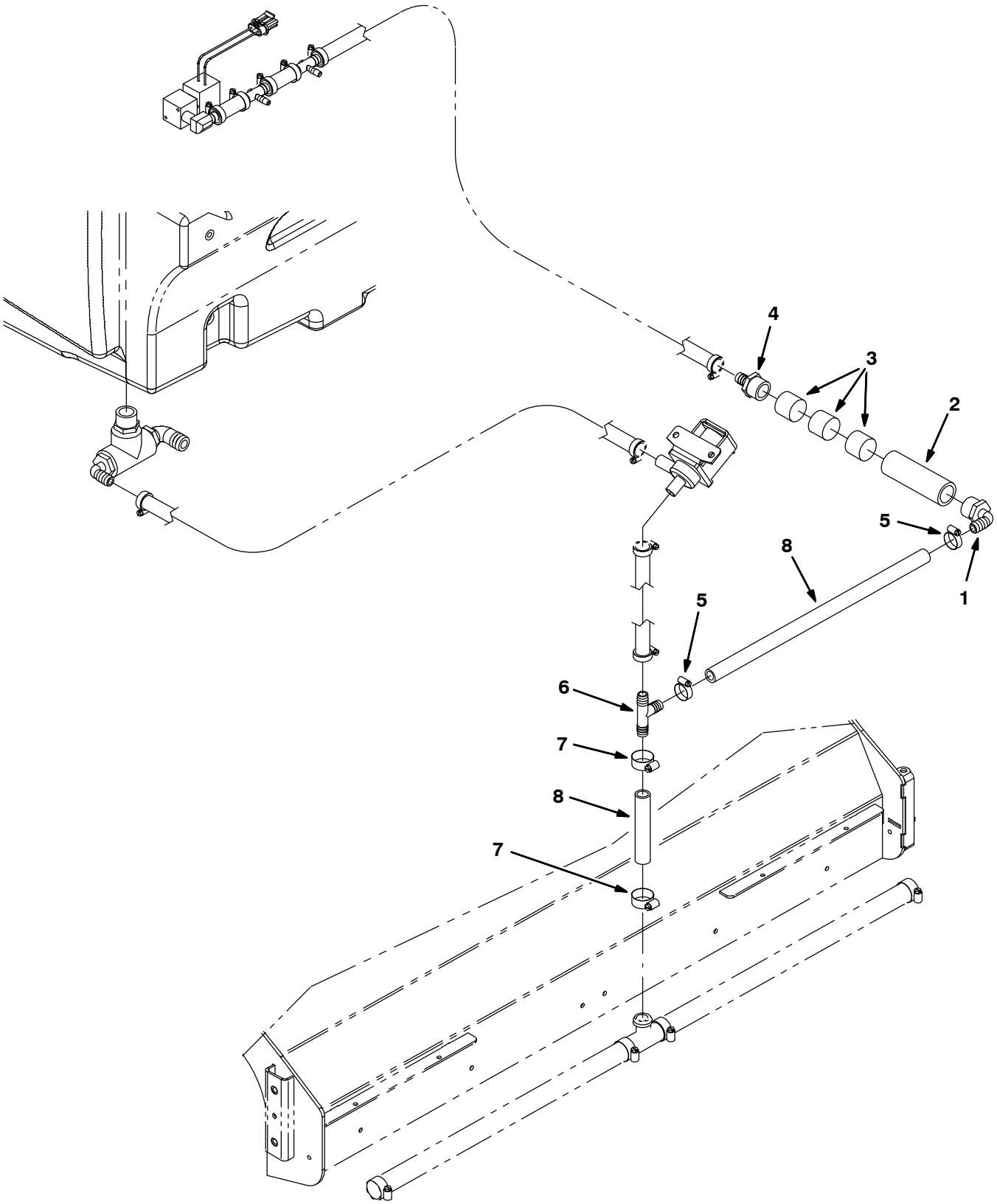

354470

Fig. 11 – FaST Foam Filter Group (000000–002532)

Ref.	Part No.	Serial Number	Description	Qty.
1	1005552	(000000–002532)	Fitting, Plstc, E90, Bm08/Pm12, Nyl	1
2	1005086	(000000–002532)	Tube, Pvc, Clr, 4.0l [Shc80]	1
3	1002789	(000000–002532)	Filter, Foam, Rbr, 1.20d, 1.0l	3
4	79273–1	(000000–002532)	Fitting, Plstc, Str, Bm08/Pm12	1
5	54333	(000000–002532)	Clamp, Hose, Wormdrive, 0.31–0.88d, .31w	2
6	385644	(000000–002532)	Fitting, Plstc, Tee, Bm08/Bm12/Bm12, Br	1
7	63810	(000000–002532)	Clamp, Hose, Wormdrive, 0.56–1.06d, .56w	2
8	1011521	(000000–002532)	Hose, Afmkt, Pvc, Brd 0.50id 02ft	1

Fig. 12 – FaST Foam Filter Group, Side Brush (000000–002532)

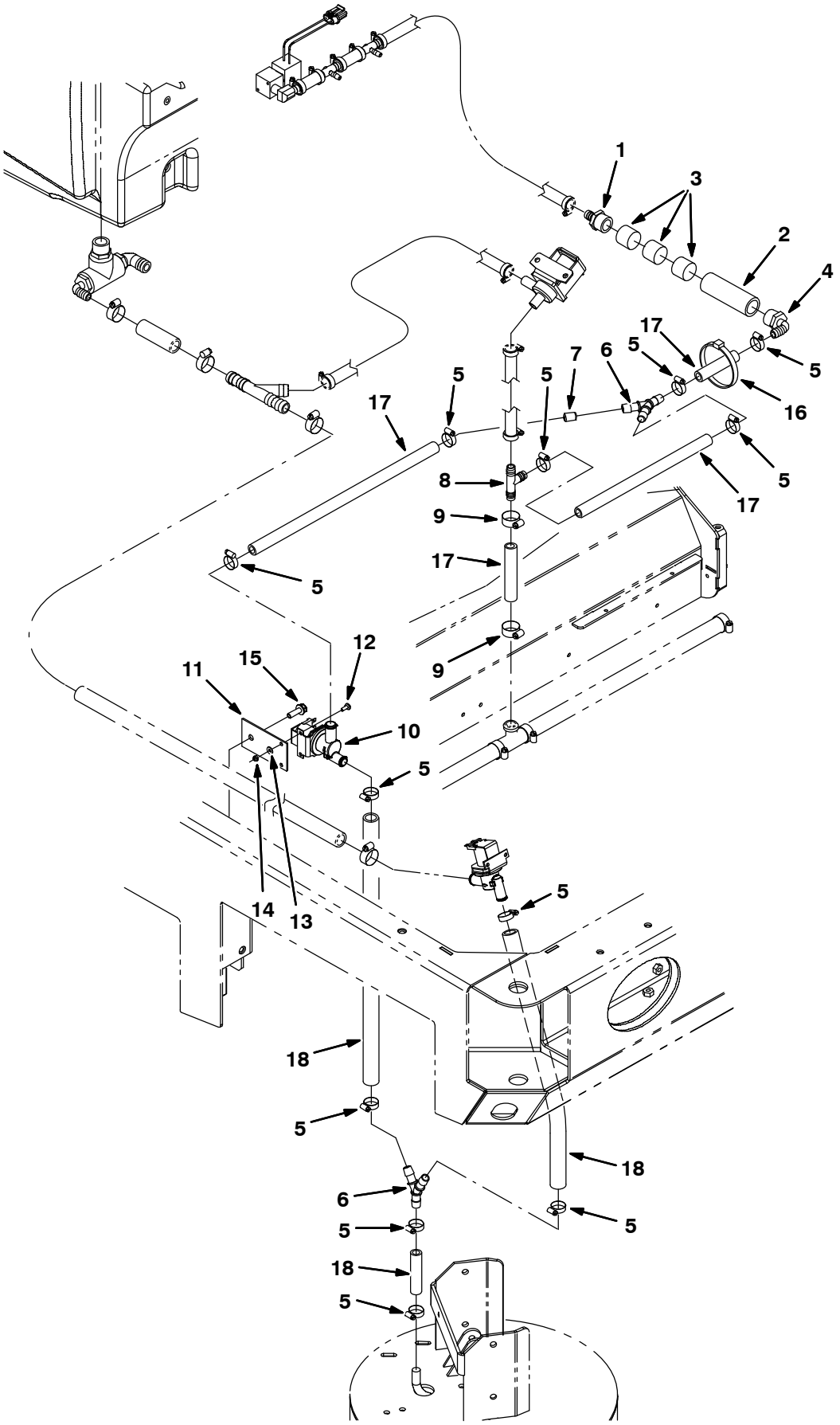

354471

Fig. 12 – FaST Foam Filter Group, Side Brush (000000–002532)

Ref.	Part No.	Serial Number	Description	Qty.
1	79273–1	(000000–002532)	Fitting, Plstc, Str, Bm08/Pm12	1
2	1005086	(000000–002532)	Tube, Pvc, Clr, 4.0l [Shc80]	1
3	1002789	(000000–002532)	Filter, Foam, Rbr, 1.20d, 1.0l	3
4	1005552	(000000–002532)	Fitting, Plstc, E90, Bm08/Pm12, Nyl	1
5	54333	(000000–002532)	Clamp, Hose, Wormdrive, 0.31–0.88d, .31w	10
6	1010668	(000000–002532)	Fitting, Plstc, Y, Bm08/Bm08/Bm08, Nyl	2
7	1018333	(000000–002532)	Fitting, Plstc, Rst, .50od /.13id	1
8	385644	(000000–002532)	Fitting, Plstc, Tee, Bm08/Bm12/Bm12, Br	1
9	63810	(000000–002532)	Clamp, Hose, Wormdrive, 0.56–1.06d, .56w	2
10	1037825	(000000–002532)	Valve, Solenoid, 12vdc, Water Flow	1
11	1030511	(000000–002532)	Plate, Mtg, Valve	11
12	09200	(000000–002532)	Screw, Pan, M5 X 0.8 X 12, Ss	2
13	01683	(000000–002532)	Washer, Flat, #10, Ss	2
14	09739	(000000–002532)	Nut, Hex, Lock, M5 X 0.8, Nl, Ss	2
15	76099	(000000–002532)	Screw, Hex, M8 X 1.25 X 25, Fmg	1
16	763116	(000000–002532)	Tie, Cable, Nyl, 15.3l . W 4.5 Max D	1
17	1011412	(000000–002532)	Hose, Afmkt, Pvc, Brd 0.50id 08ft	1
18	1015067	(000000–002532)	Hose, Afmkt, Pvc, Clr 0.50id 08ft	1

Fig. 13 – FaST Wire Harness Group (000000–002532)

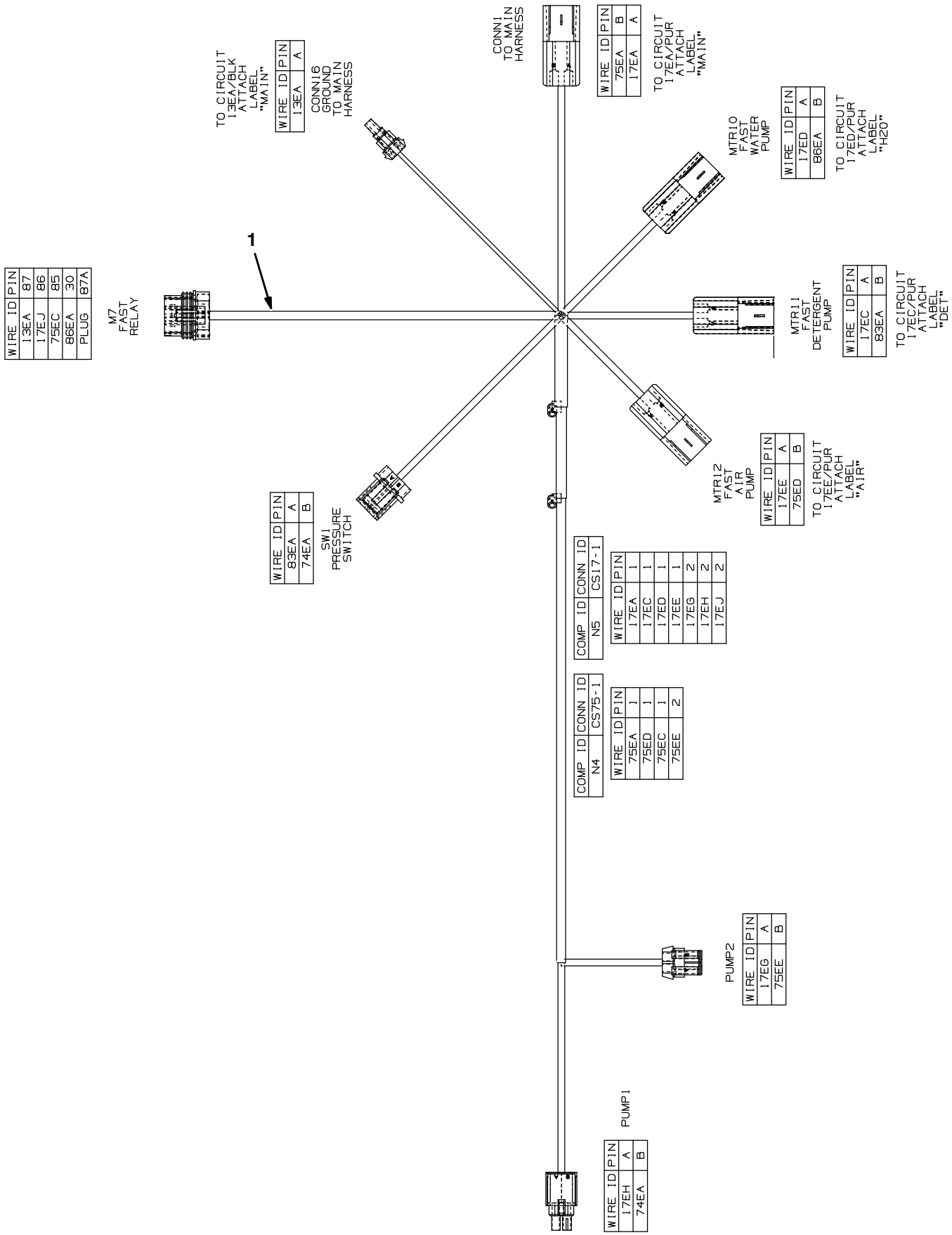

1019646–354472

Fig. 13 – FaST Wire Harness Group (000000–002532)

Ref.	Part No.	Serial Number	Description	Qty.
1	1019646	(000000–002532)	Harness [FaST, M20 And T20]	1

Fig. 14 – FaST Pumps and Detergent Group (002533–)

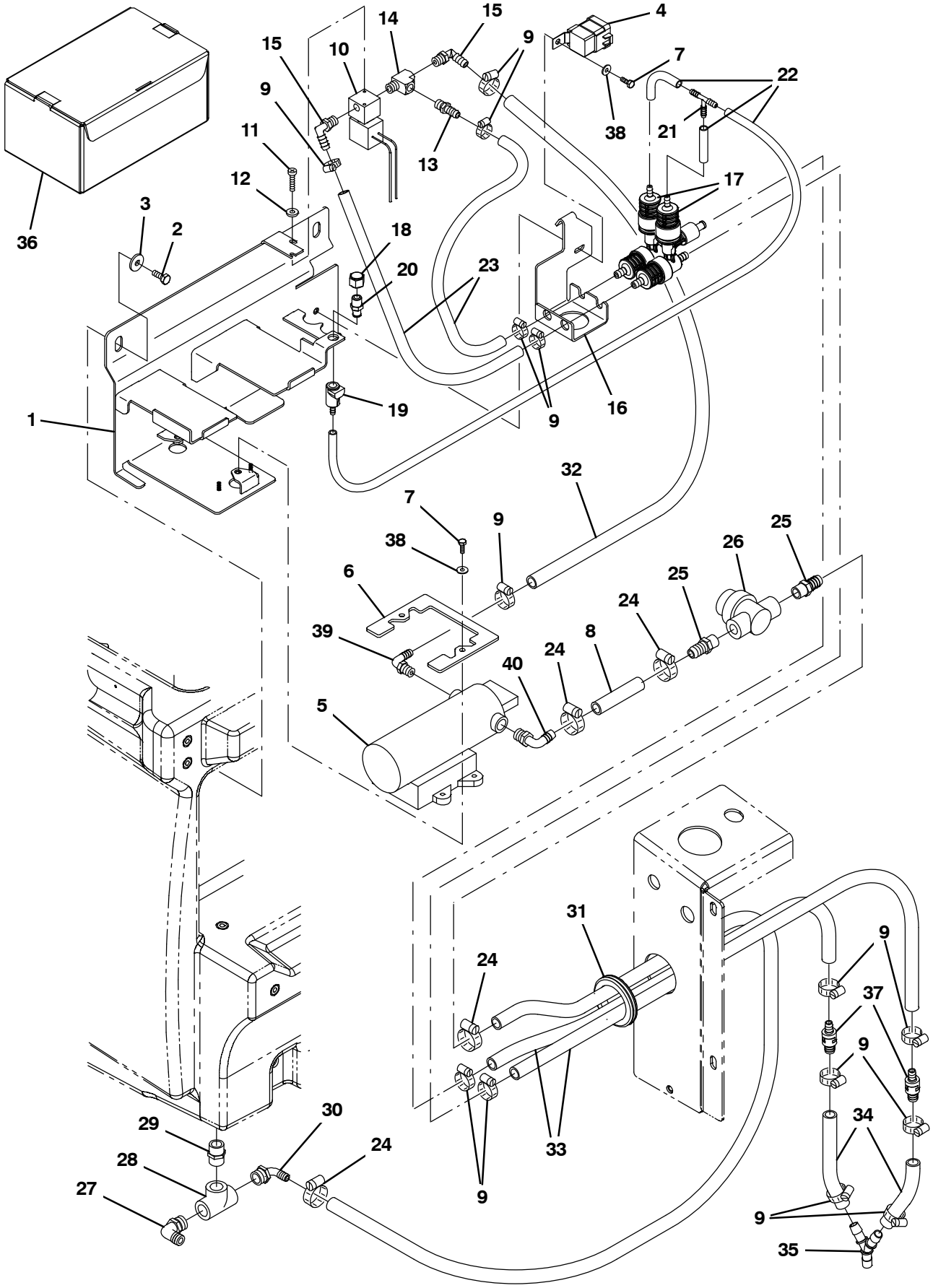

354789

Fig. 14 – FaST Pumps and Detergent Group (002533–)

Ref.	Part No.	Serial Number	Description	Qty.
1	1044342	(002533–)	Bracket Wldt, Mtg [FaST Gen 2+]	1
2	09740	(002533–)	Screw, Hex, M8 X 1.25 X 20, Ss	2
3	1017218	(002533–)	Washer, Flat, 0.32b 1.00d .12, Ss	2
4	56186	(002533–)	Relay, 12vdc, 040a, Spdt No	1
5	1036801	(002533–)	Pump, Soltn, 13.7vdc, 65psi [FaST Ii+]	1
6	1039357	(002533–)	Bracket, Retainer, Pump	1
7	15678	(002533–)	Screw, Hex, M6 X 1.00 X 16, Ss	3
8	1011403	(002533–)	Hose, Afmkt, Pvc, Brd, 0.50Id, 01Ft, Clr	1
9	43844	(002533–)	Clamp, Hose, Wormdrive, 0.25–0.62d, .31w	14
10	1018098	(002533–)	Valve, Water, Solenoid, 12vdc 6.0mm Pf04	1
11	09200	(002533–)	Screw, Pan, Phl, M5 X 0.80 X 12, Ss	2
12	01683	(002533–)	Washer, Flat, 10, Ss	2
13	150540	(002533–)	Fitting, Plstc, Str, Bm06/Pm04	1
14	150709	(002533–)	Fitting, Brs, Tee, Pf04/Pf04/Pm04, Run	1
15	57248	(002533–)	Fitting, Plstc, E90, Bm06/Pm04, Nyl	2
16	1044343	(002533–)	Bracket, Mtg [FaST Gen 2+]	1
17	9008868	(002533–)	FaST Kit, Injector [M20/T20/M30 FaST III] (See Breakdowns)	2
18	1005435	(002533–)	Fitting, Plstc, Pipe, Cap, Pf04	1
19	1002898	(002533–)	Fitting, Plstc, Str, Bm04, Cplg, Fem	1
20	1002899	(002533–)	Fitting, Plstc, Str, Pm04, Cplg, Mal	2
21	150713	(002533–)	Fitting, Plstc, Tee, Bm04/Bm04/Bm04	1
22	1014986	(002533–)	Hose, Afmkt, Pvc, Clr, 0.25id, 02ft	1
23	1006416	(002533–)	Hose, Afmkt, Pvc, Clr, 0.38id, 03ft	1
24	54333	(002533–)	Clamp, Hose, Wormdrive, 0.31–0.88d, .31w	8
25	150538	(002533–)	Fitting, Plstc, Str, Bm06/Pm06	2
26	1005302	(002533–)	Filter, In–Line, Pf06/Pf06 080mesh 02.6l	1
27	14877	(002533–007259)	Fitting, Plstc, E90, Bm12/Pm12	1
27	73468	(007260–)	Fitting, Plstc, E90, Bm10/Pm12	1
28	42133A	(002533–)	Fitting, Plstc, Tee, Pf12/Pf12/Pf12	1
29	24544	(002533–)	Fitting, Plstc, Str, Pm12/Pm12 1.60l	1
30	1005552	(002533–)	Fitting, Plstc, E90, Bm08/Pm12, Nyl	1
31	10632–19	(002533–)	Grommet, Rbr, 2.13id, F/2.5h, .12 Matl	1
32	1006400	(002533–)	Hose, Afmkt, Pvc, Brd, 0.38id, 03ft, Clr	1
33	1024237	(002533–)	Hose, Afmkt, Pvc, Wir, 0.50id, 03ft, Clr	1
34	1014929	(002533–)	Hose, Afmkt, Pvc, Clr, 0.38id, 01ft	1
35	1010668	(002533–)	Fitting, Plstc, Y, Bm08/Bm08/Bm08, Nyl	1
36	1017022	(002533–)	Detergent, Pkg, 2 Liter, Sgl [665]	1
37	1035794	(002533–)	Valve, Check, 0005psi Bm06/Bm08	2
38	01684	(002533–)	Washer, Flat, 0.27B 0.69D .05, Ss	3
39	1049254	(002533–)	Fitting, Nyl, Qdc, E90, Bm08/ Qm10	1
40	1049259	(002533–)	Fitting, NylY, Qdc, E90, Bm06/ Qm10	1

Fig. 15 – FaST Solution Supply Group (002533–)

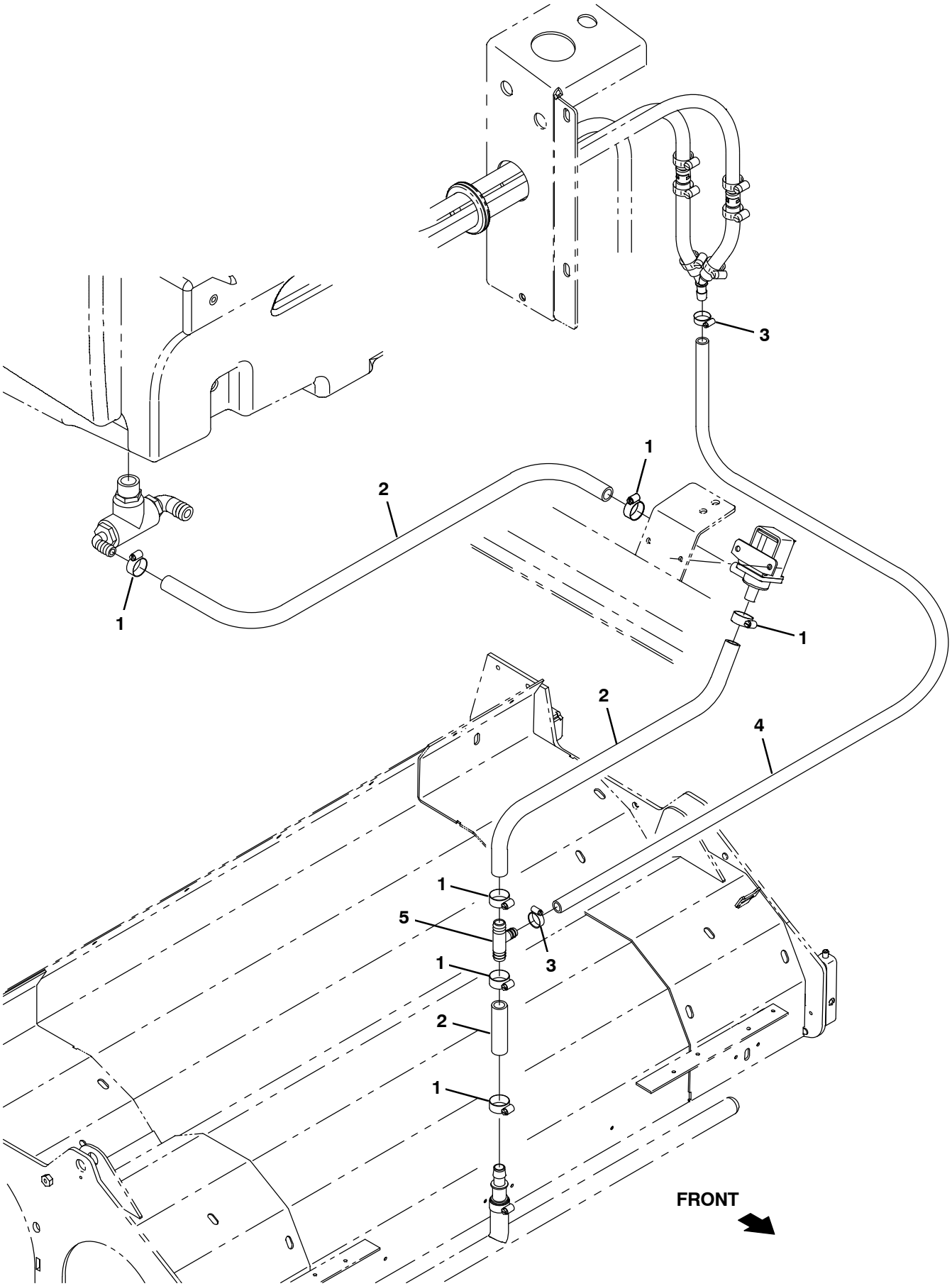

354791

Fig. 15 – FaST Solution Supply Group (002533–)

Ref.	Part No.	Serial Number	Description	Qty.
1	63810	(002533–)	Clamp, Hose, Wormdrive, 0.56–1.06d, .56w	6
2	1015045	(002533–007259)	Hose, Afmkt, Pvc, Brd, 0.75id, 08ft, Clr	1
2	1015032	(007260–)	Hose, Afmkt, Pvc, Brd, 0.62id, 08ft, Clr	1
3	54333	(002533–)	Clamp, Hose, Wormdrive, 0.31–0.88d, .31w	2
4	1011412	(002533–)	Hose, Afmkt, Pvc, Brd, 0.50id, 08ft, Clr	1
5	385644	(002533–007259)	Fitting, Plstc, Tee, Bm08/Bm12/Bm12, Br	1
5	1015486	(007260–)	Fitting, Plstc, Tee, Bm08/Bm10/Bm10, Br	1

Fig. 16 – FaST Solution Supply Group with Side Brush (002533–)

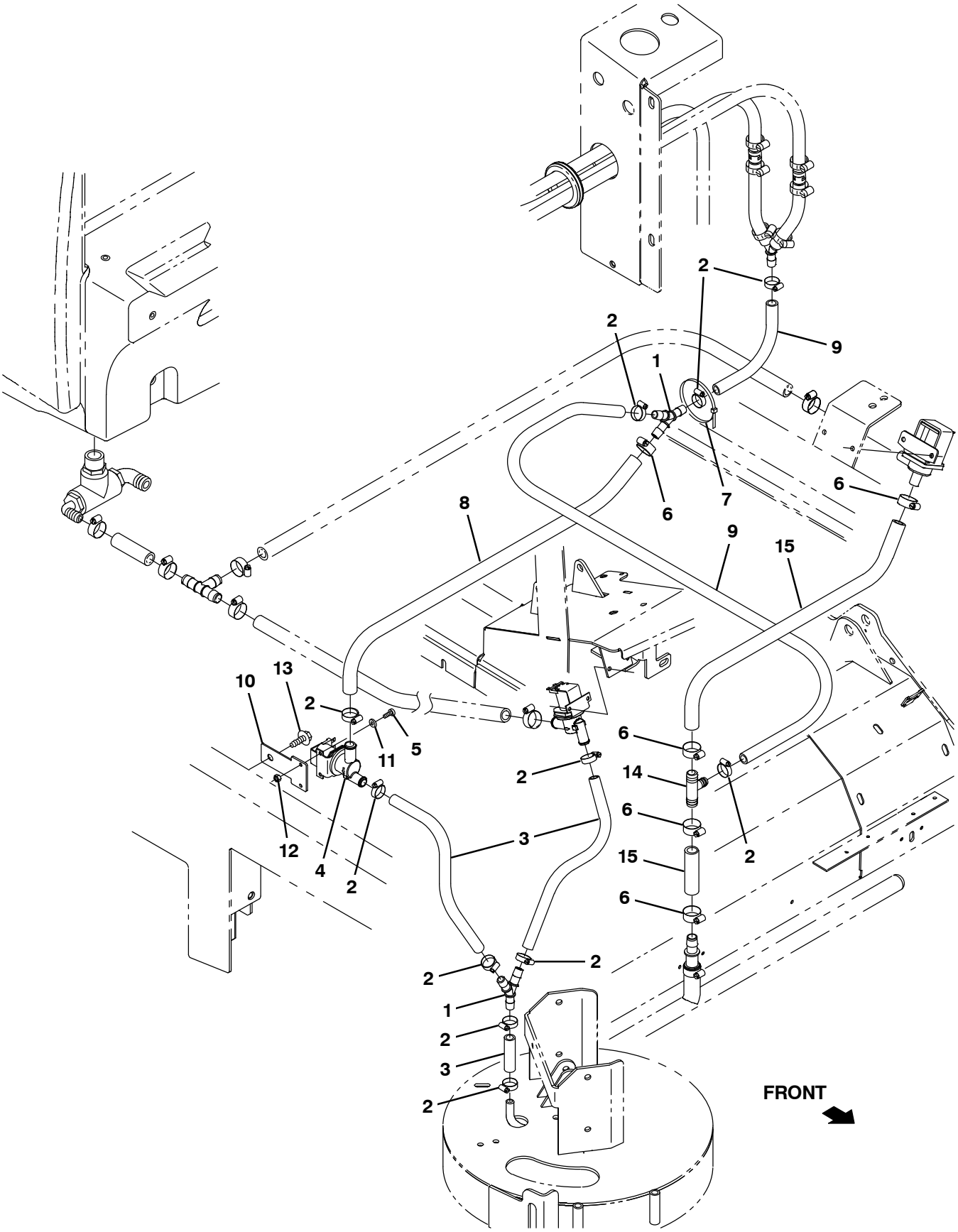

354792

Fig. 16 – FaST Solution Supply Group with Side Brush (002533–)

Ref.	Part No.	Serial Number	Description	Qty.
1	1010668	(002533–)	Fitting, Plstc, Y, Bm08/Bm08/Bm08, Nyl	2
2	54333	(002533–)	Clamp, Hose, Wormdrive, 0.31–0.88d, .31w	11
3	1015067	(002533–)	Hose, Afmkt, Pvc, Clr, 0.50id, 08ft	1
4	1037825	(002533–)	Valve, Solenoid, 12vdc, Water Flow	1
5	09200	(002533–)	Screw, Pan, Phl, M5 X 0.80 X 12, Ss	2
6	63810	(002533–)	Clamp, Hose, Wormdrive, 0.56–1.06d, .56w	5
7	763116	(002533–)	Tie, Cable, Nyl, 15.3l . W 4.5 Max D	1
8	31543	(002533–)	Hose, Heater, E90, 0.62id, 24.0 4.0	1
9	1011412	(002533–)	Hose, Afmkt, Pvc, Brd, 0.50id, 08ft, Clr	1
10	1030511	(002533–)	Plate, Mtg, Valve	1
11	01683	(002533–)	Washer, Flat, 10, Ss	2
12	09739	(002533–)	Nut, Hex, Lock, M5 X 0.80, Nl, Ss	2
13	76099	(002533–)	Screw, Hex, M8 X 1.25 X 25, Fmg	1
14	385644	(002533–007259)	Fitting, Plstc, Tee, Bm08/Bm12/Bm12, Br	1
14	1015486	(007260–)	Fitting, Plstc, Tee, Bm08/Bm10/Bm10, Br	1
15	1006401	(002533–007259)	Hose, Afmkt, Pvc, Brd, 0.50id, 03ft, Clr	1
15	1015026	(007260–)	Hose, Afmkt, Pvc, Brd, 0.62id, 03ft, Clr	1

Fig. 17 – FaST Wire Harness Group (002533–)

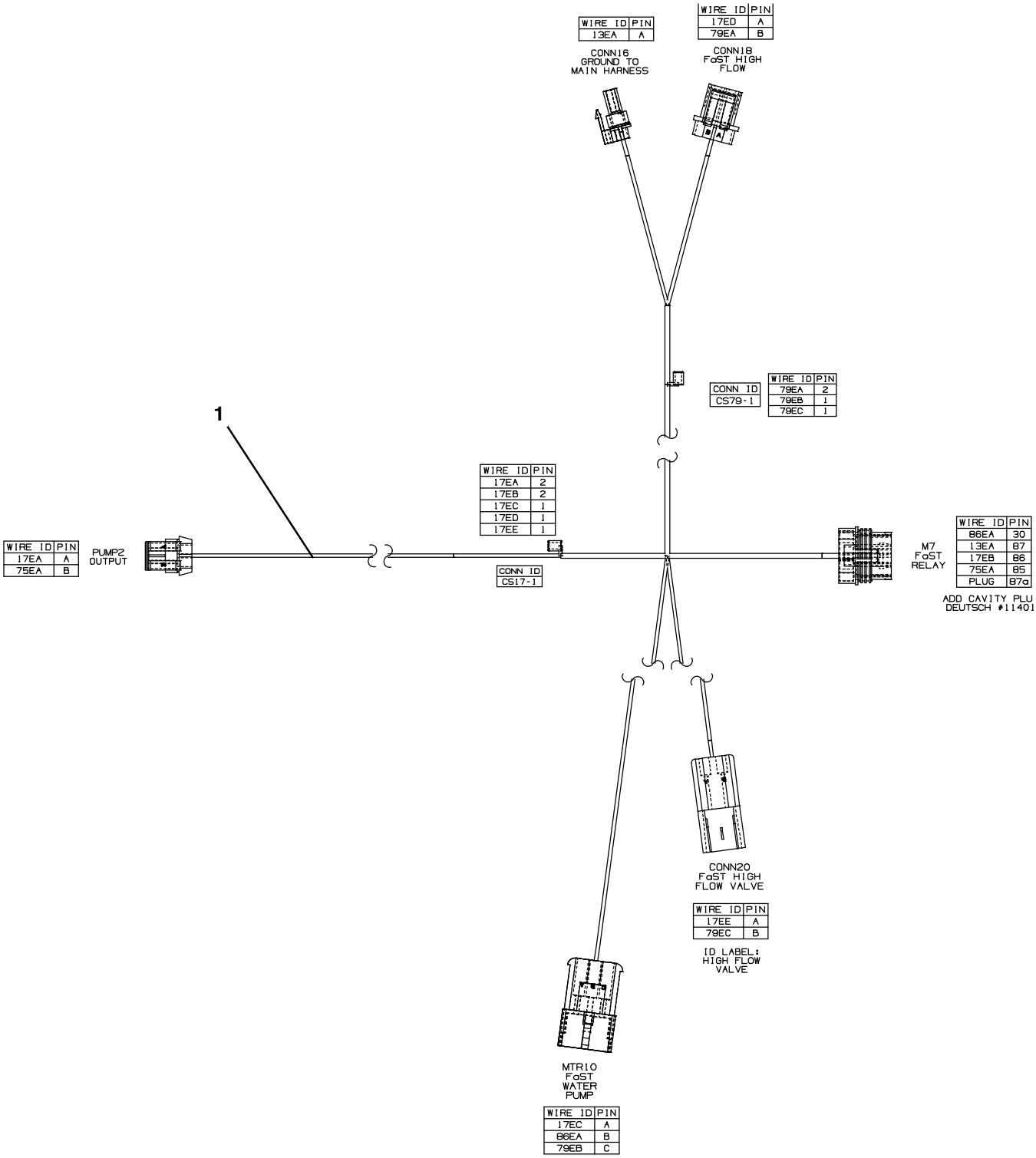

354724

Fig. 17 – FaST Wire Harness Group (002533–)

Ref.	Part No.	Serial Number	Description	Qty.
1	1037809	(002533–)	Harness, Wire [FaST Gen 2]	1

Fig. 18 – ec–H20 Solution Pump Group

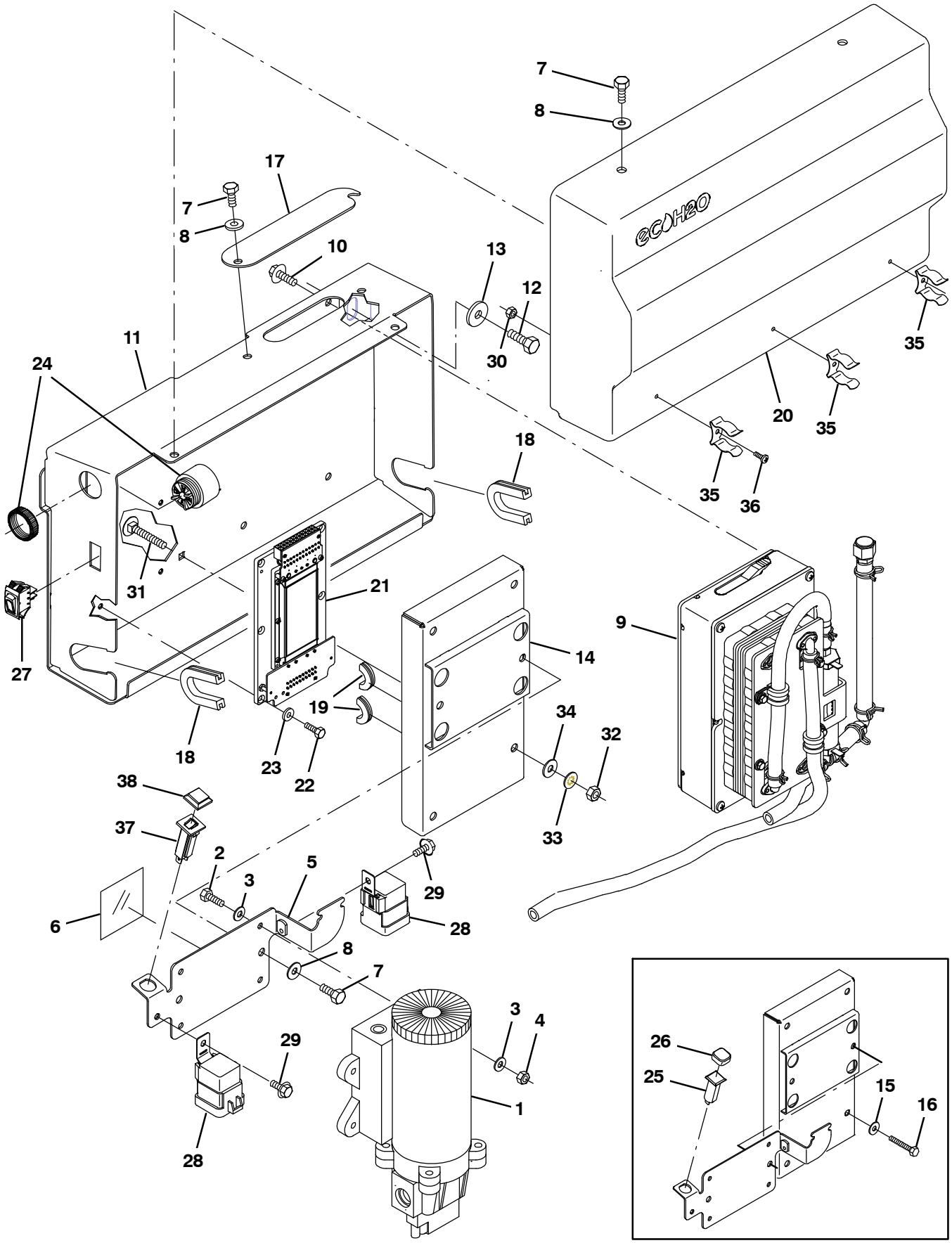

356033

Fig. 18 – ec–H20 Solution Pump Group

Ref.	Part No.	Serial Number	Description	Qty.
1	1060624	(000000–)	Pump, Soltn, Ele, 13.7vdc,12/28psi	1
2	09252	(000000–)	Screw, Hex, M5 X 0.80 X 20, 8.8	4
3	19066	(000000–)	Washer, Flat, 10	8
4	06549	(000000–)	Nut, Hex, Lock, M5 X 0.80, Nl	4
5	1060273	(000000–)	Plate, Mtg, Pump	1
6	1059677	(000000–)	Strip, Rbr, 0.06 03.54w 03.5l [Neo/60]	1
7	09744	(000000–)	Screw, Hex, M6 X 1.00 X 12, Ss	6
8	01684	(000000–)	Washer, Flat, 0.27b 0.69d .05, Ss	6
9	9007882	(000000–)	Module Kit, Replmt [Ec–H20] (See Breakdowns)	1
10	1040467	(000000–)	Screw, Hex, M6 X 1.00 X 20, 9.8, Sems	4
11	1060292	(000000–)	Plate Wldt, Mtg	1
12	09740	(000000–)	Screw, Hex, M8 X 1.25 X 20, Ss	2
13	1017218	(000000–)	Washer, Flat, 0.32b 1.00d .12, Ss	2
14	1060185	(000000–)	Cover Wldt, Power Supply	1
15	01684	(000000–xxxxxx)	Washer, Flat, 0.27b 0.69d .05, Ss	4
16	07805	(000000–xxxxxx)	Screw, Hex, M6 X 1.00 X 35, Ss	4
17	1060291	(000000–)	Plate, Inspection	1
18	1020168	(000000–)	Molding, Afmkt, Trim, Pvc, .08 .11, 01Ft	1
19	10632–4	(000000–)	Grommet, Rbr, 0.62id, F/0.9h, .06 Matl	1
20	1060719	(000000–)	Cover, Trimmed	1
21	1058963	(000000–)	Converter, Ele, 12–36 Vdc	1
22	09206	(000000–)	Screw, Hex, M4 X 0.70 X 12, 8.8	4
23	19065	(000000–)	Washer, Flat, 08	4
24	1052726	(000000–)	Alarm, 9–48vdc, 95 Db(A) [Ec–H20]	1
25	1053078	(000000–003658)	Circuitbreaker, 2.0a, Resetable	1
26	1046173	(000000–003658)	Boot, Circuitbreaker	1
27	1044393	(000000–)	Switch, Rocker, Spst, Mom	1
28	56186	(000000–)	Relay, 12vdc, 040a, Spdt No	2
29	223198	(000000–)	Screw, Hex, M5 X 0.80 X 10, Fmg	2
30	33932	(000000–)	Nut, Hex, Lock, M4 X 0.70, Nl, Ss	3
31	1062804	(xxxxxx–)	Bolt, Carriage, M06 X 1.00 X 40, 4.6	4
32	41359	(xxxxxx–)	Nut, Hex, Std, M6 X 1.00, 8	4
33	32982	(xxxxxx–)	Washer, Lock, Int, 0.25	4
34	32483	(xxxxxx–)	Washer, Flat, 0.25, Sae	4
35	1029057	(000000–)	Clip, Grip, Finger, 0.88–1.25d	3
36	12323	(000000–)	Screw, Pan, Phl, M4 X 0.70 X 20, Ss	3
37	1064183	(003659–)	Circuitbreaker, 02.0a, Resetable	1
38	1064191	(003659–)	Boot, Circuitbreaker	1

Fig. 19 – ec–H20 Solution Pump Supply Group

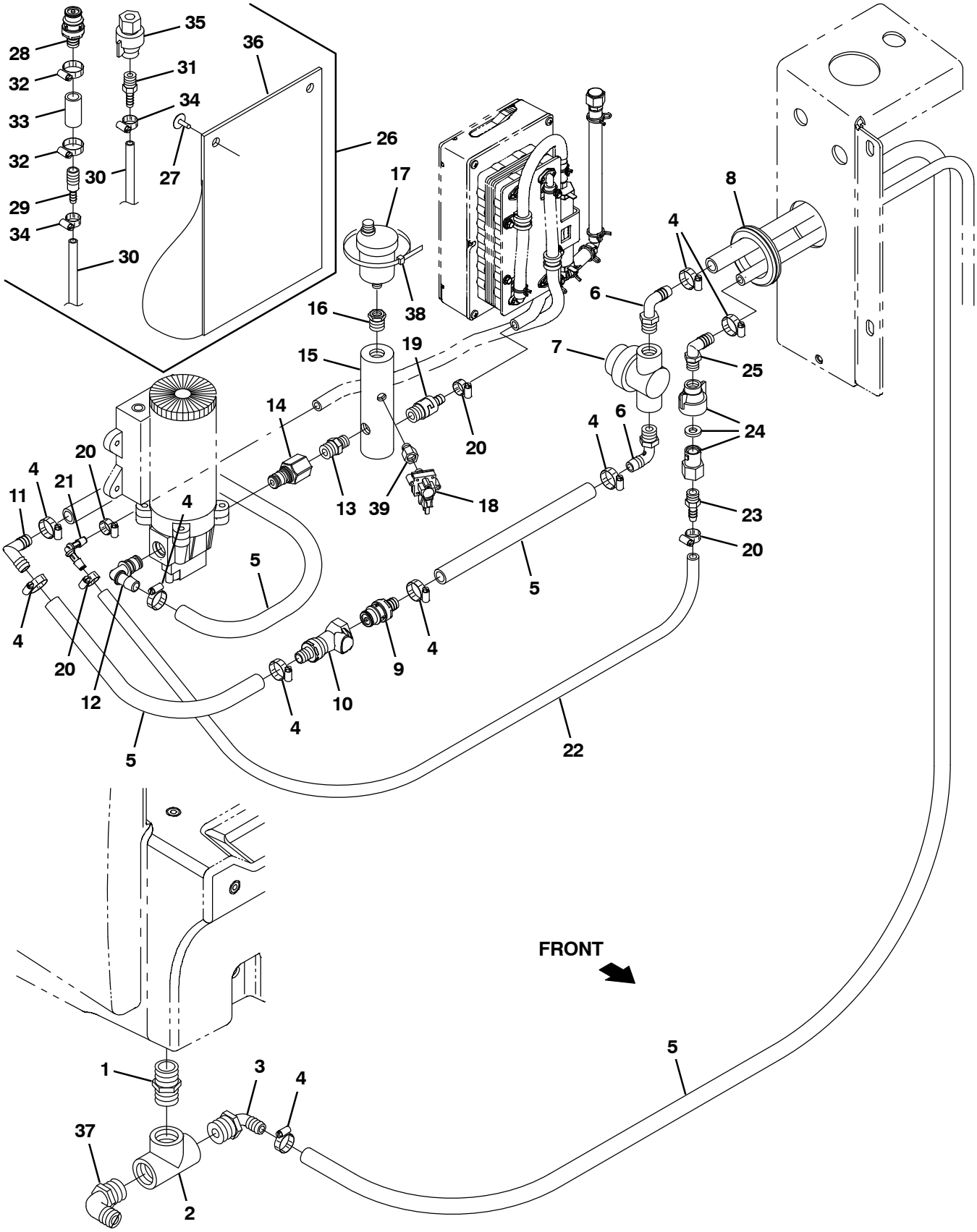

356034

Fig. 19 – ec–H20 Solution Pump Supply Group

	Ref.	Part No.	Serial Number	Description	Qty.
	1	24544	(000000–)	Fitting, Plstc, Str, Pm12/Pm12 1.60l	1
	2	42133A	(000000–)	Fitting, Plstc, Tee, Pf12/Pf12/Pf12	1
	3	1005552	(000000–)	Fitting, Plstc, E90, Bm08/Pm12, Nyl	1
	4	54333	(000000–)	Clamp, Hose, Wormdrive, 0.31–0.88d, .31w	9
	5	1011837	(000000–)	Hose, Afmkt, Pvc, Brd, 0.50id, 12ft, Clr	1
	6	64778	(000000–)	Fitting, Plstc, E90, Bm08/Pm06	2
	7	1005302	(000000–)	Filter, In–Line, Pf06/Pf06 080mesh 02.6l	1
	8	10632–19	(000000–)	Grommet, Rbr, 2.13id, F/2.5h, .12 Matl	3
	9	1017415	(000000–)	Insert, Cplg, Qm, Bm08	1
	10	1017413	(000000–)	Housing, Cplg, Qf / Pm08	1
	11	63987–1	(000000–)	Fitting, Plstc, E90, Bm08/Bm08	1
	12	1049254	(000000–)	Fitting, Nyl, Qdc, E90, Bm08/ Qm10	1
	13	1059372	(000000–)	Fitting, Plstc, Str, Pf06/Qm10, Pvc	1
	14	1005219	(000000–)	Fitting, Plstc, Str, Pm04/Pm06, Nyl	1
	15	1060596	(000000–)	Manifold, Water	1
	16	24698	(000000–)	Fitting, Brs, Str, Pf02/Pm06	1
	17	1017386	(000000–)	Valve, Vent, Air, Float Type	1
	18	1058935	(000000–)	Switch, Press, 50 Psi, Pm02	1
	19	1060693	(000000–)	Valve, Check, 0005psi Pm04/Bm06	1
	20	43844	(000000–)	Clamp, Hose, Wormdrive, 0.25–0.62d, .31w	4
	21	1059391	(000000–)	Fitting, Plstc, E90, Bm05/Bm05, Nyl	1
	22	1052336	(000000–)	Hose, Afmkt, PVC, Brd, 0.31Id, 03Ft, Clr	2
	23	1052017	(000000–)	Fitting, Plstc, Str, Bm05/Pm04	1
	24	1071280	(000000–)	Fitting Assy, Qdc, Pf04	1
	25	65581	(000000–)	Fitting, Plstc, E90, Bm08/Pm04	1
▽	26	9014281	(000000–)	ec–H2O Kit, Flush, Replmt[M20, M30&T20]	1
▲	27	72968	(000000–)	Rivet, Plstc, .250d X 0.90	2
▲	28	1017415	(000000–)	Insert, Cplg, Qm, Bm08	1
▲	29	630164	(000000–)	Fitting, Plstc, Str, Bm04/Bm08	1
▲	30	1006415	(000000–)	Hose, Afmkt, Pvc, Clr, 0.25id, 03ft	2
▲	31	50901	(000000–)	Fitting, Plstc, Str, Bm04/Pm04	1
▲	32	54333	(000000–)	Clamp, Hose, Wormdrive, 0.31–0.88d, .31w	2
▲	33	1011403	(000000–)	Hose, Afmkt, Pvc, Brd, 0.50id, 01ft, Clr	1
▲	34	43844	(000000–)	Clamp, Hose, Wormdrive, 0.25–0.62d, .31w	2
▲	35	1071280	(000000–)	Fitting Assy, Qdc, Pf04	1
▲	36	48790	(000000–)	Pouch	1
	37	14877	(000000–007259)	Fitting, Plstc, E90, Bm12/Pm12	1
	37	73468	(007260–)	Fitting, Plstc, E90, Bm10/Pm12	1
	38	49266	(000000–)	Tie, Cable, Nyl, 07.3l .19w 1.8 Max D	1
	39	1062403	(000000–)	Fitting, Brs, Snubber, Pm02/Pf02	1

Fig. 20 – ec–H20 Solution Supply Group

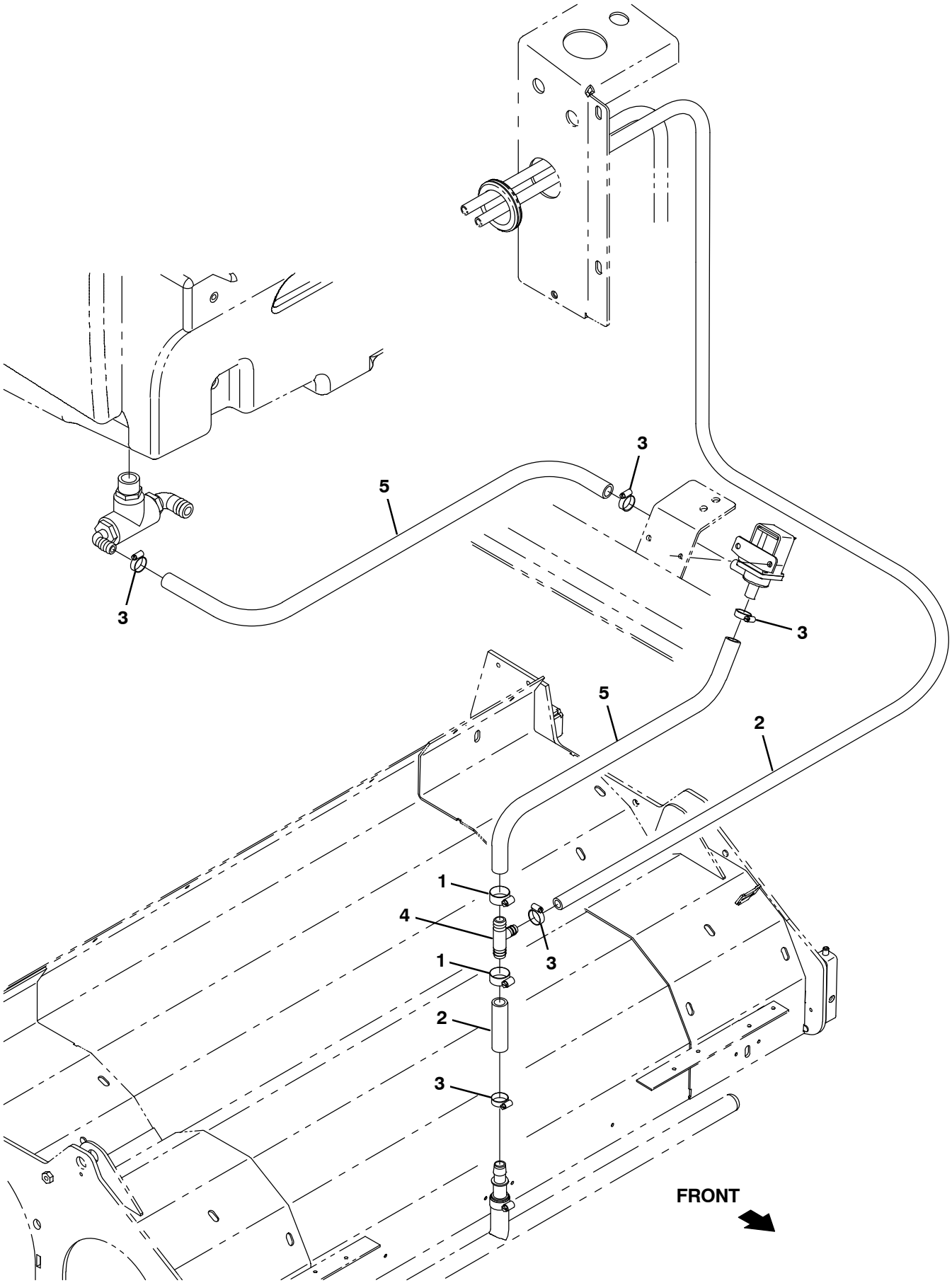

356037

Fig. 20 – ec–H20 Solution Supply Group

Ref.	Part No.	Serial Number	Description	Qty.
1	63810	(000000–)	Clamp, Hose, Wormdrive, 0.56–1.06d, .56w	2
2	1011837	(000000–)	Hose, Afmkt, Pvc, Brd, 0.50id, 12ft, Clr	1
3	54333	(000000–)	Clamp, Hose, Wormdrive, 0.31–0.88d, .31w	5
4	385644	(000000–007259)	Fitting, Plstc, Tee, Bm08/Bm12/Bm12, Br	1
4	1015486	(007260–)	Fitting, Plstc, Tee, Bm08/Bm10/Bm10, Br	1
5	1015045	(000000–007259)	Hose, Afmkt, Pvc, Brd, 0.75id, 08ft, Clr	1
5	1015032	(007260–)	Hose, Afmkt, Pvc, Brd, 0.62id, 08ft, Clr	1

Fig. 21 – ec–H20 Solution Supply Group with Side Brush

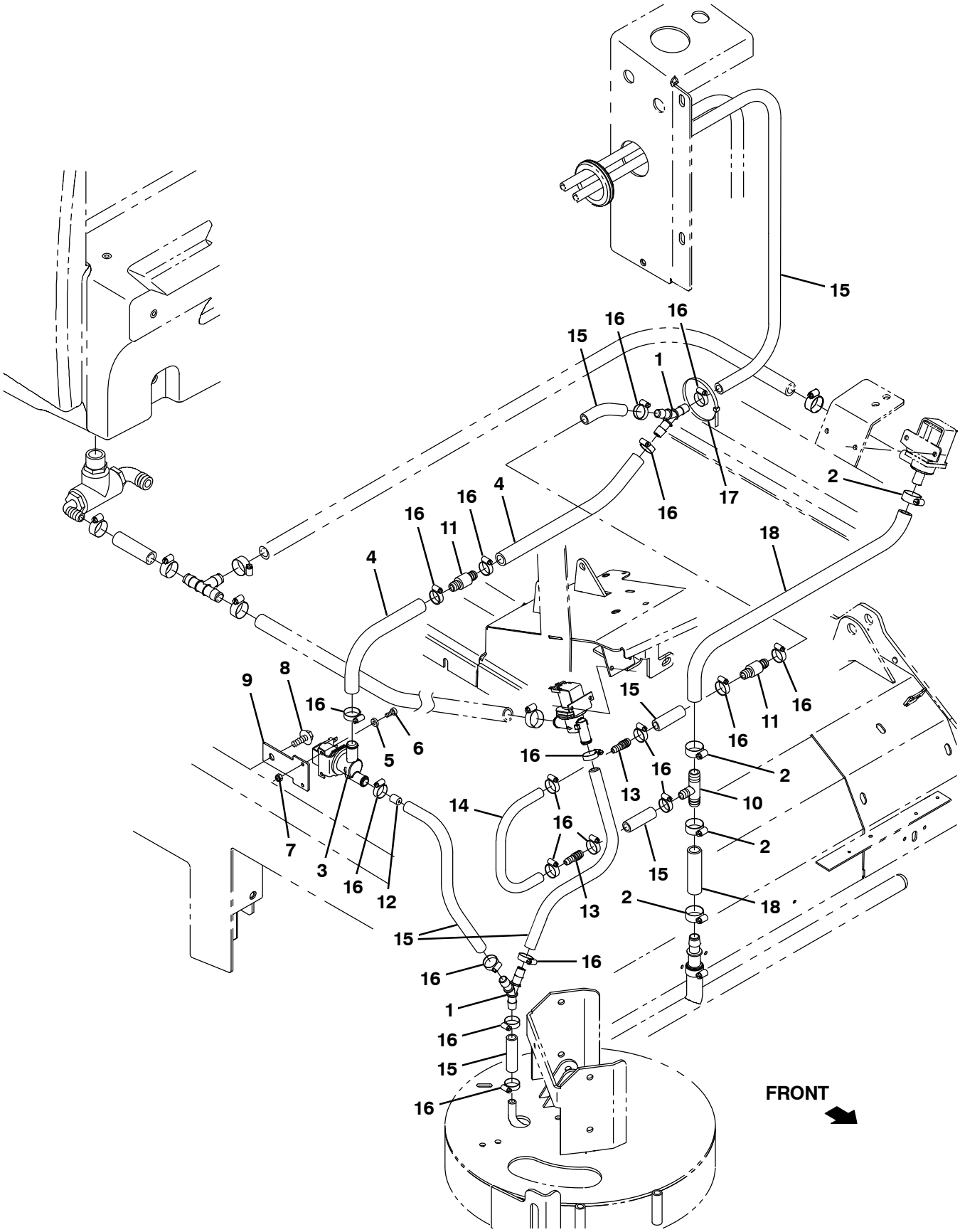

356038

Fig. 21 – ec–H20 Solution Supply Group with Side Brush

Ref.	Part No.	Serial Number	Description	Qty.
1	1010668	(000000–)	Fitting, Plstc, Y, Bm08/Bm08/Bm08, Nyl	1
2	63810	(000000–)	Clamp, Hose, Wormdrive, 0.56–1.06d, .56w	4
3	1037825	(000000–)	Valve Assy, Water, Solenoid, 12vdc	1
4	31543	(000000–)	Hose, Heater, E90, 0.62id, 24.0 4.0	1
5	01683	(000000–)	Washer, Flat, 10, Ss	2
6	24196	(000000–)	Screw, Pan, Phl, M5 X 0.80 X 20, Ss	2
7	09739	(000000–)	Nut, Hex, Lock, M5 X 0.80, Nl, Ss	2
8	76099	(000000–)	Screw, Hex, M8 X 1.25 X 25, Fmg	1
9	1030511	(000000–)	Plate, Mtg, Valve	1
10	385644	(000000–007259)	Fitting, Plstc, Tee, Bm08/Bm12/Bm12, Br	1
10	1015486	(007260–)	Fitting, Plstc, Tee, Bm08/Bm10/Bm10, Br	1
11	1010614	(000000–)	Valve, Check, 2gpm .5psi Bm08/Bm08	2
12	1061045	(000000–)	Plug, Restrictor	1
13	222375	(000000–)	Fitting, Plstc, Str, Bm06/Bm08	2
14	1014974	(000000–)	Hose, Afmkt, Pvc, Brd, 0.38id, 02ft, Clr	1
15	1011412	(000000–)	Hose, Afmkt, Pvc, Brd, 0.50id, 08ft, Clr	1
16	54333	(000000–)	Clamp, Hose, Wormdrive, 0.31–0.88d, .31w	18
17	763116	(000000–)	Tie, Cable, Nyl, 15.3l . W 4.5 Max D	1
18	1015026	(000000–)	Hose, Afmkt, Pvc, Brd, 0.62id, 03ft, Clr	1

Fig. 22 – ec–H20 Wire Harnesses Group

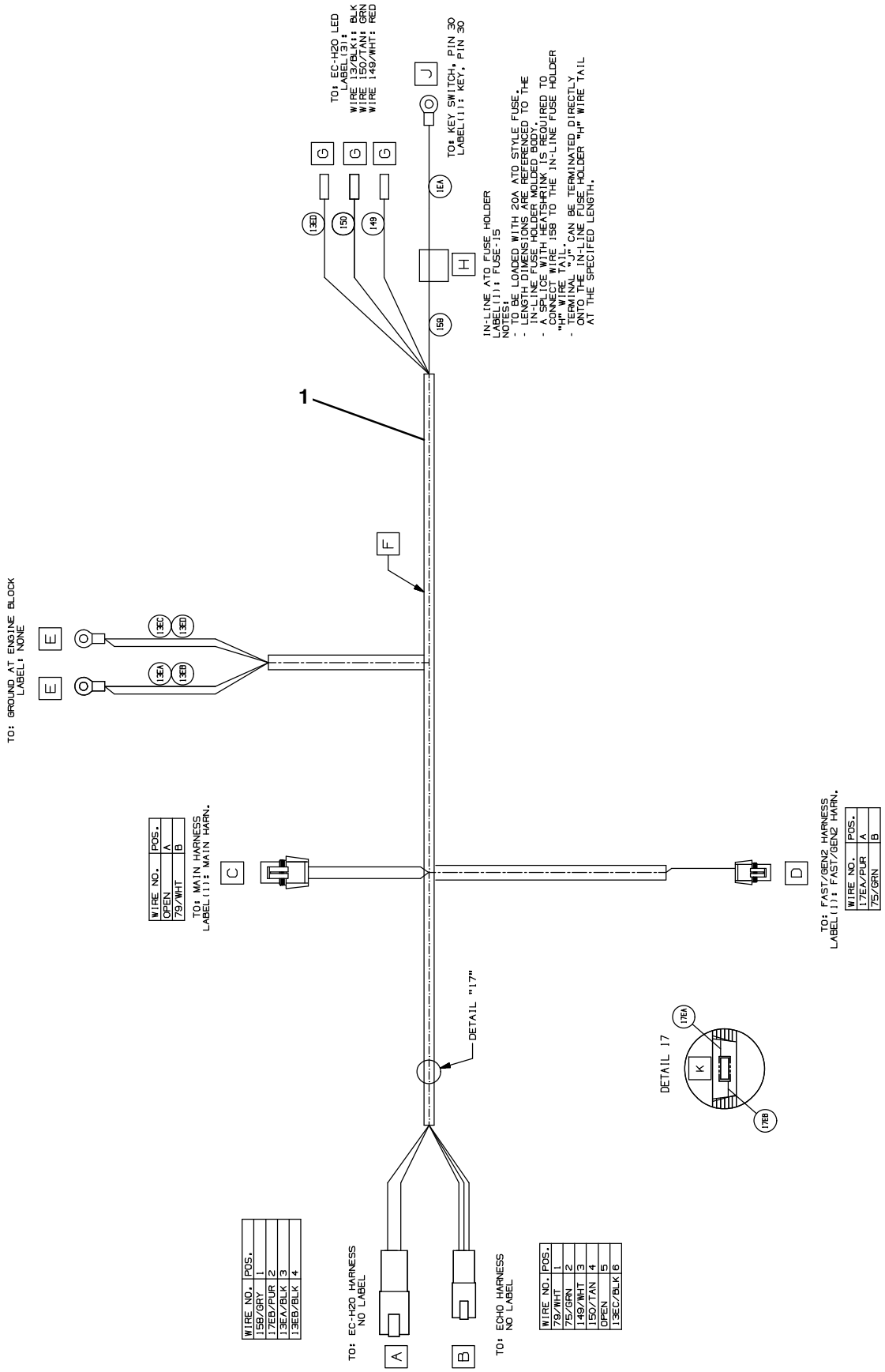

Fig. 22 – ec–H20 Wire Harnesses Group

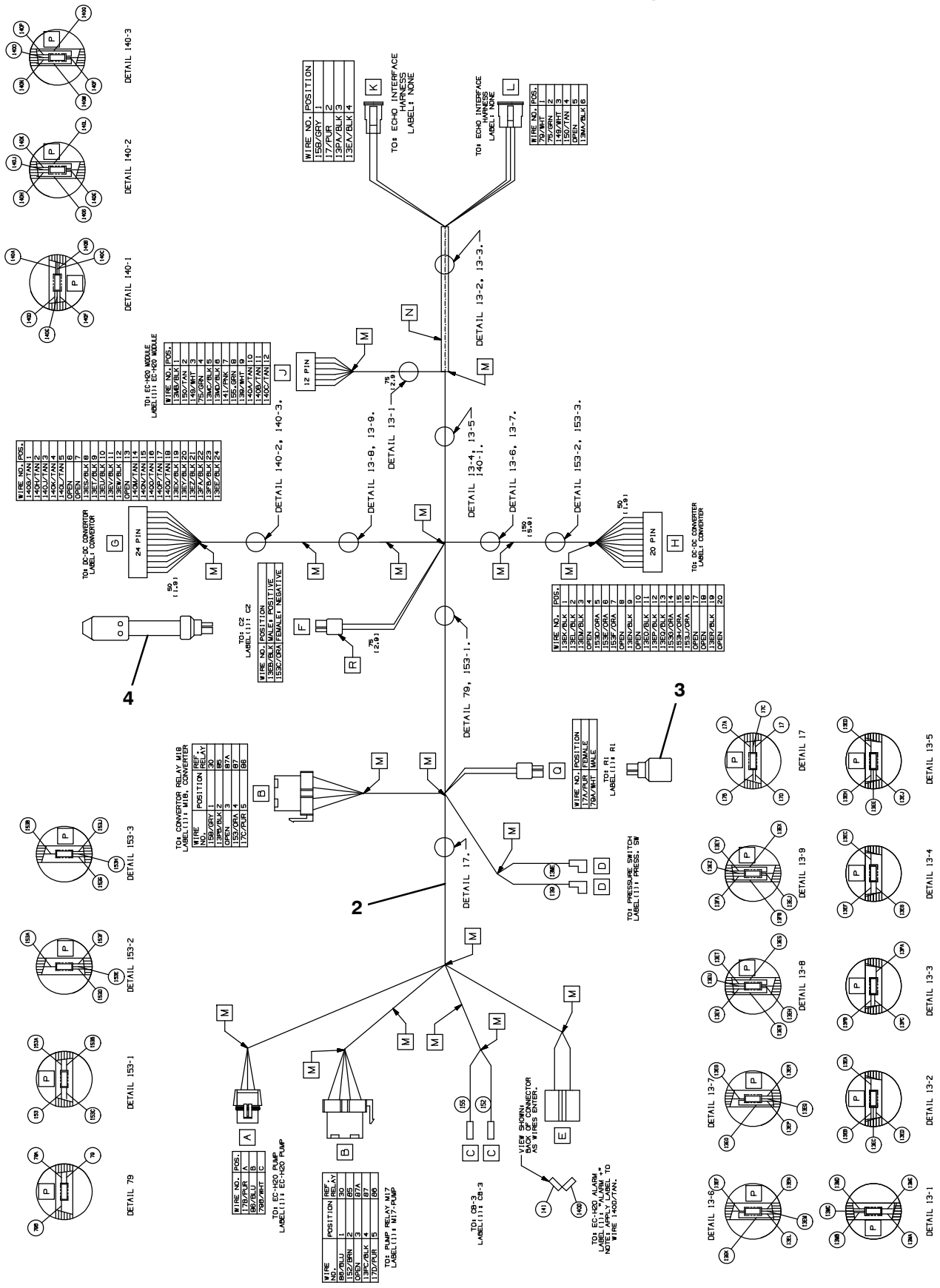

356038

Fig. 22 – ec–H20 Wire Harnesses Group

Ref.	Part No.	Serial Number	Description	Qty.
1	1071947	(000000–)	Harness, Wire [Ec–H2o, Mako, 2.0l & Dsl]	1
2	1060871	(000000–)	Harness, Wire [Ec–H2o]	1
3	1060880	(000000–)	Resistor, Ele, Plug [430 , 2w]	1
4	1060881	(000000–)	Capacitor, Plug [4700uf, 25v]	1

Fig. 23 – Backup Alarm Kit

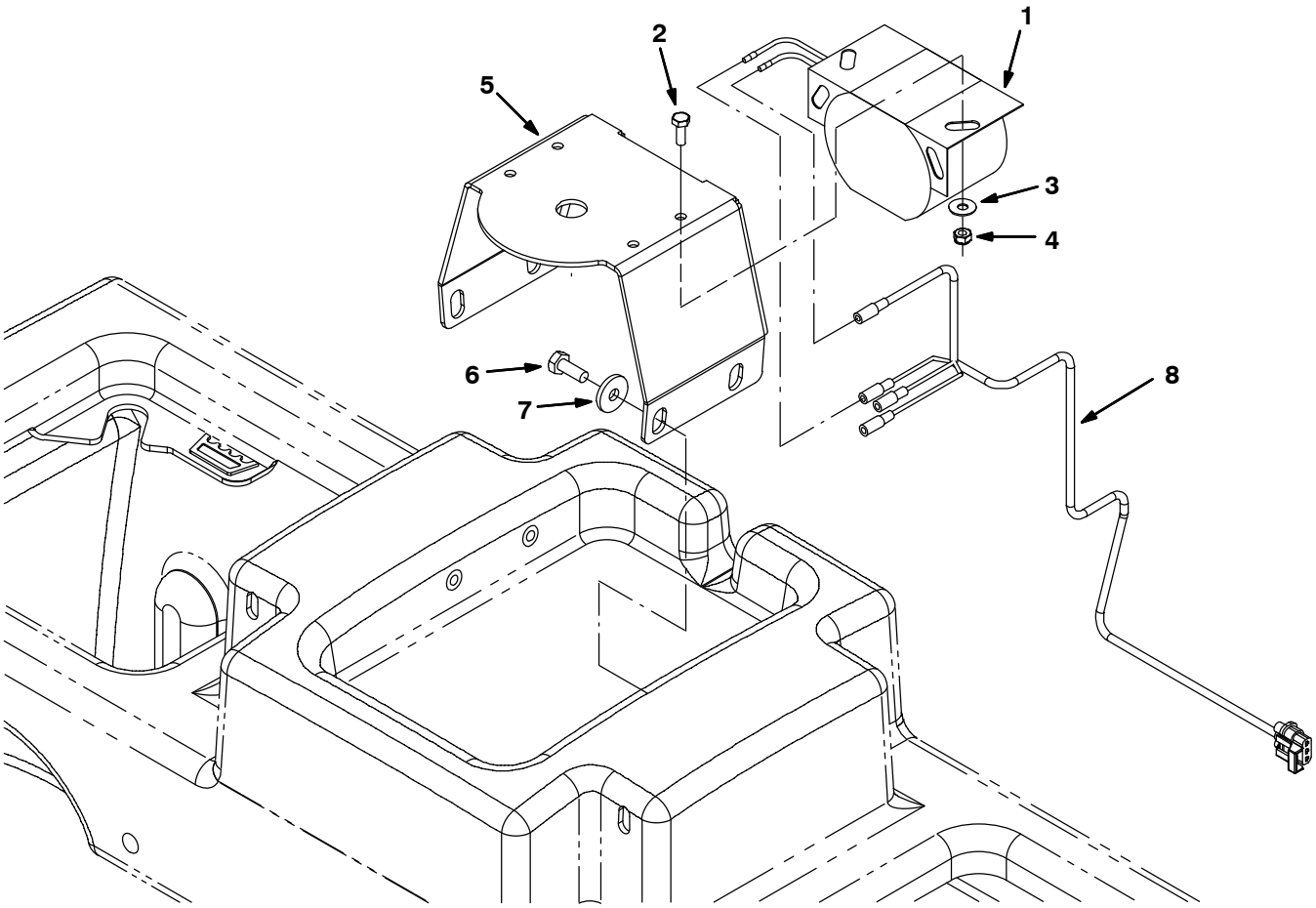

354473

	Ref.	Part No.	Serial Number	Description	Qty.
▽		9001321	(000000–)	Alarm Kit, Backup, Ci [M20 And T20]	1
▲	1	9007131	(000000–)	Alarm Assy, Backup, 12/48Vdc	1
▲	2	24196	(000000–)	Screw, Pan, Phl, M5 X 0.80 X 20, Ss	2
▲	3	19066	(000000–)	Washer, Flat, 10	2
▲	4	09739	(000000–)	Nut, Hex, Lock, M5 X 0.80, Nl, Ss	2
▲	5	1019445	(000000–)	Bracket, Sppt, Strobe Light	1
▲	6	09740	(000000–)	Screw, Hex, M8 X 1.25 X 20, Ss	4
▲	7	1017218	(000000–)	Washer, Flat, 0.32b 1.00d .12, Ss	4
▲	8	1019971	(000000–)	Harness, Warning / Backup [M20 & T20]	1

Fig. 24 – Light Kit, Flashing

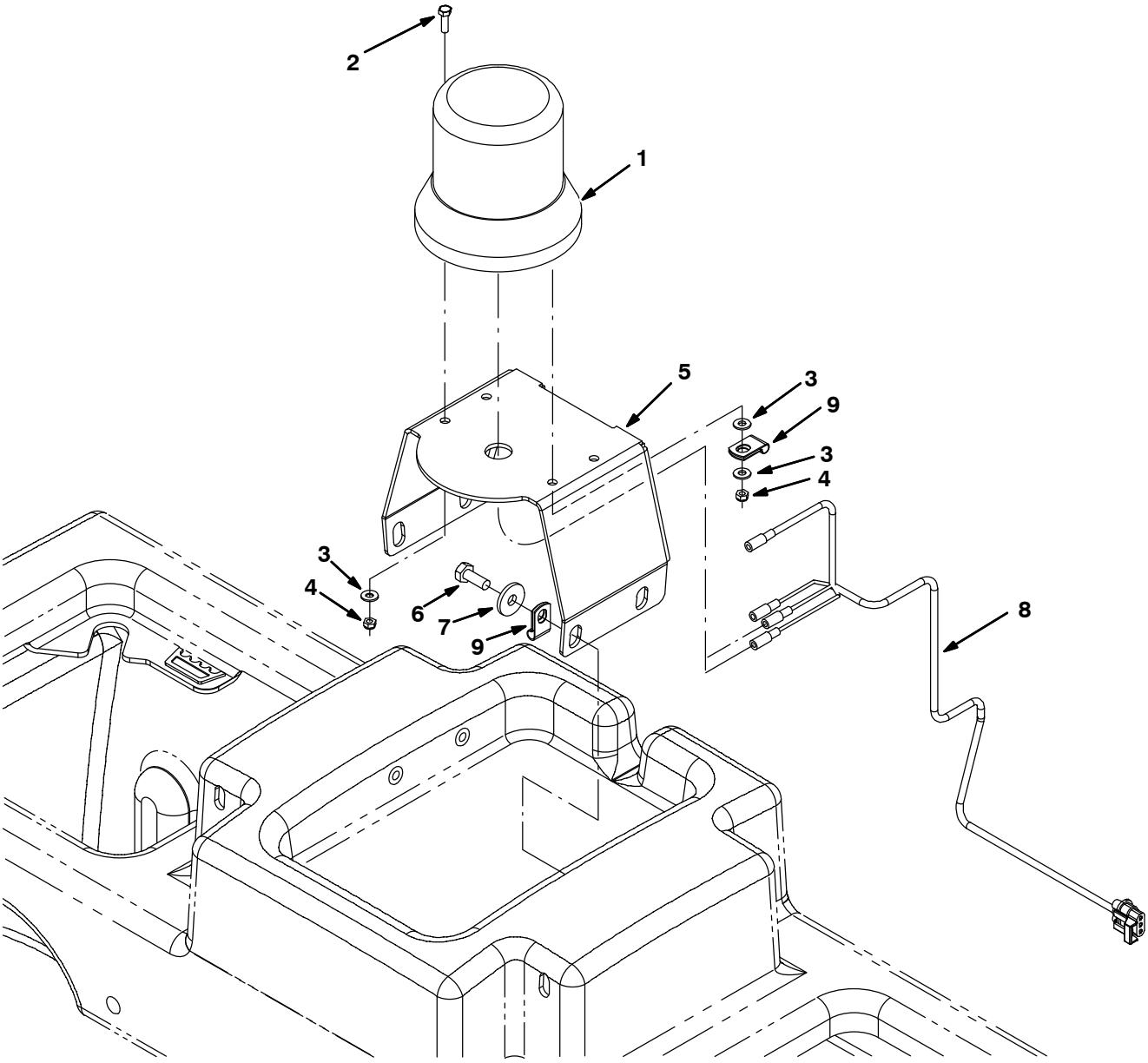

354475

Fig. 24 – Light Kit, Flashing

	Ref.	Part No.	Serial Number	Description	Qty.
▽		9001327	(000000–)	Light Kit, Flsh, Ci [M20 And T20]	1
▲▽	1	1017248	(000000–)	Lamp, Flasher, Amb [12–48 Vdc]	1
▲▲		9000879	(000000–)	Lens, Lamp, Amb, Strobe/Flasher	1
▲▲		9000846	(000000–)	Lamp, Bulb, Flsh	1
▲▲		1027800	(000000–)	Lens, Blue, Option, F/ Strobe / Flsh Light	1
▲▲		1027798	(000000–)	Lens, Red, Option, F/ Strobe / Flsh Light	1
▲		55272	(000000–)	Terminal, Bullet, Mal, .157d, 12ga	2
▲	2	24196	(000000–)	Screw, Pan, Phl, M5 X 0.80 X 20, Ss	2
▲	3	19066	(000000–)	Washer, Flat, 10	2
▲	4	09739	(000000–)	Nut, Hex, Lock, M5 X 0.80, Nl, Ss	2
▲	5	1019445	(000000–)	Bracket, Sppt, Strobe Light	1
▲	6	09740	(000000–)	Screw, Hex, M8 X 1.25 X 20, Ss	4
▲	7	1017218	(000000–)	Washer, Flat, 0.32b 1.00d .12, Ss	4
▲	8	1019971	(000000–)	Harness, Warning / Backup [M20 & T20]	1
▲	9	46236	(000000–)	Clamp, Cable, Stl, 0.25D X 0.56W, 1Hole	2

Fig. 25 – Light Kit, Strobe

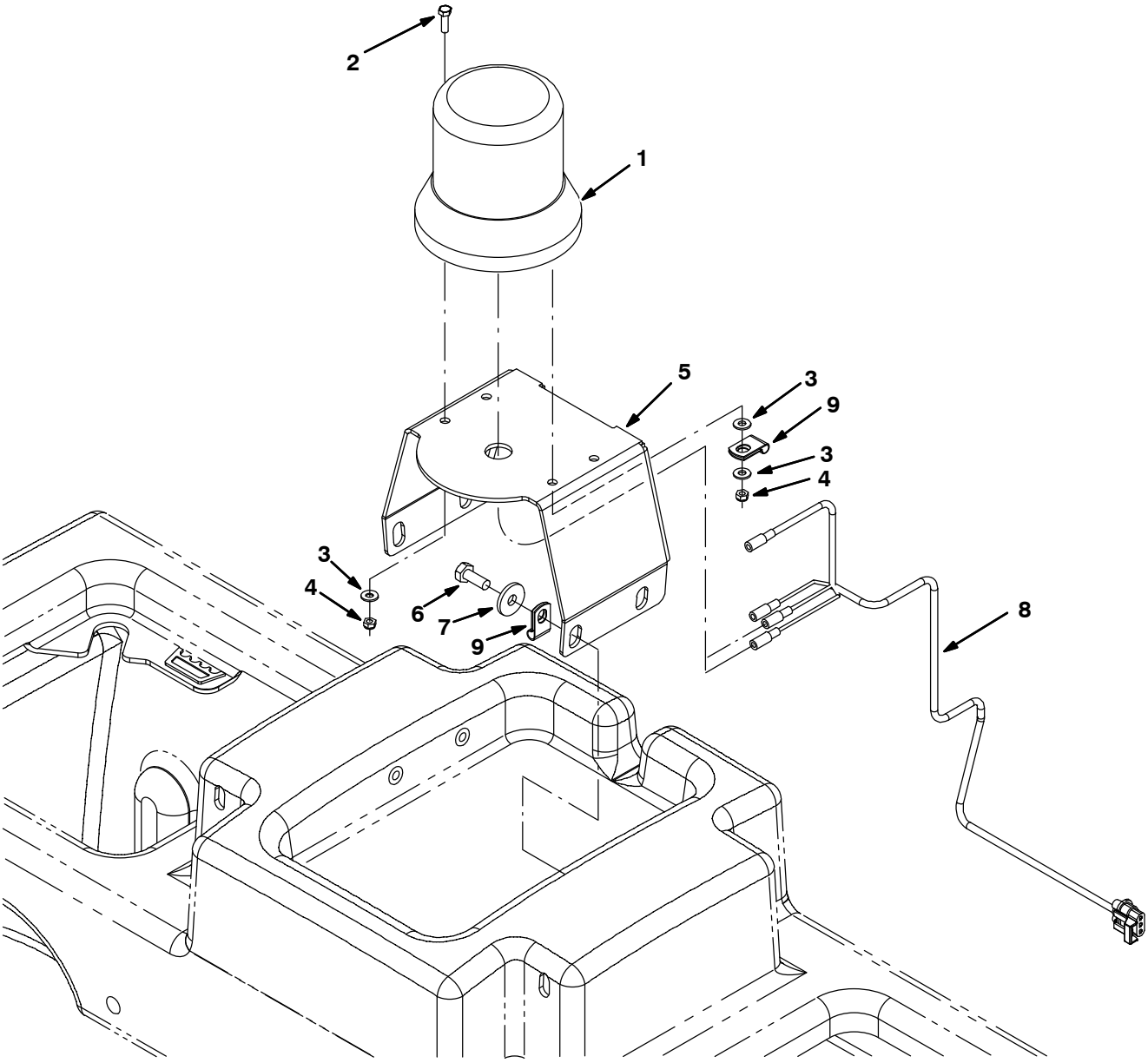

354475

Fig. 25 – Light Kit, Strobe

	Ref.	Part No.	Serial Number	Description	Qty.
▽		9001331	(000000–)	Light Kit, Strobe, Ci [M20 And T20]	1
▲▽	1	1017250	(000000–)	Lamp Strobe, Amb [12–48 Vdc]	1
▲▲		9000879	(000000–)	Lens, Lamp, Amb, Strobe/Flasher	1
▲▲		9000845	(000000–)	Lamp, Bulb, Strobe	1
▲▲		1027800	(000000–)	Lens, Blue, Option, F/ Strobe / Flsh Light	1
▲▲		1027798	(000000–)	Lens, Red, Option, F/ Strobe / Flsh Light	1
▲		55272	(000000–)	Terminal, Bullet, Mal, .157d, 12ga	2
▲	2	24196	(000000–)	Screw, Pan, Phl, M5 X 0.80 X 20, Ss	2
▲	3	19066	(000000–)	Washer, Flat, 10	2
▲	4	09739	(000000–)	Nut, Hex, Lock, M5 X 0.80, Nl, Ss	2
▲	5	1019445	(000000–)	Bracket, Sppt, Strobe Light	1
▲	6	09740	(000000–)	Screw, Hex, M8 X 1.25 X 20, Ss	4
▲	7	1017218	(000000–)	Washer, Flat, 0.32b 1.00d .12, Ss	4
▲	8	1019971	(000000–)	Harness, Warning / Backup [M20 & T20]	1
▲	9	46236	(000000–)	Clamp, Cable, Stl, 0.25D X 0.56W, 1Hole	2

Fig. 26 – Light Kit, Flashing Overhead Guard

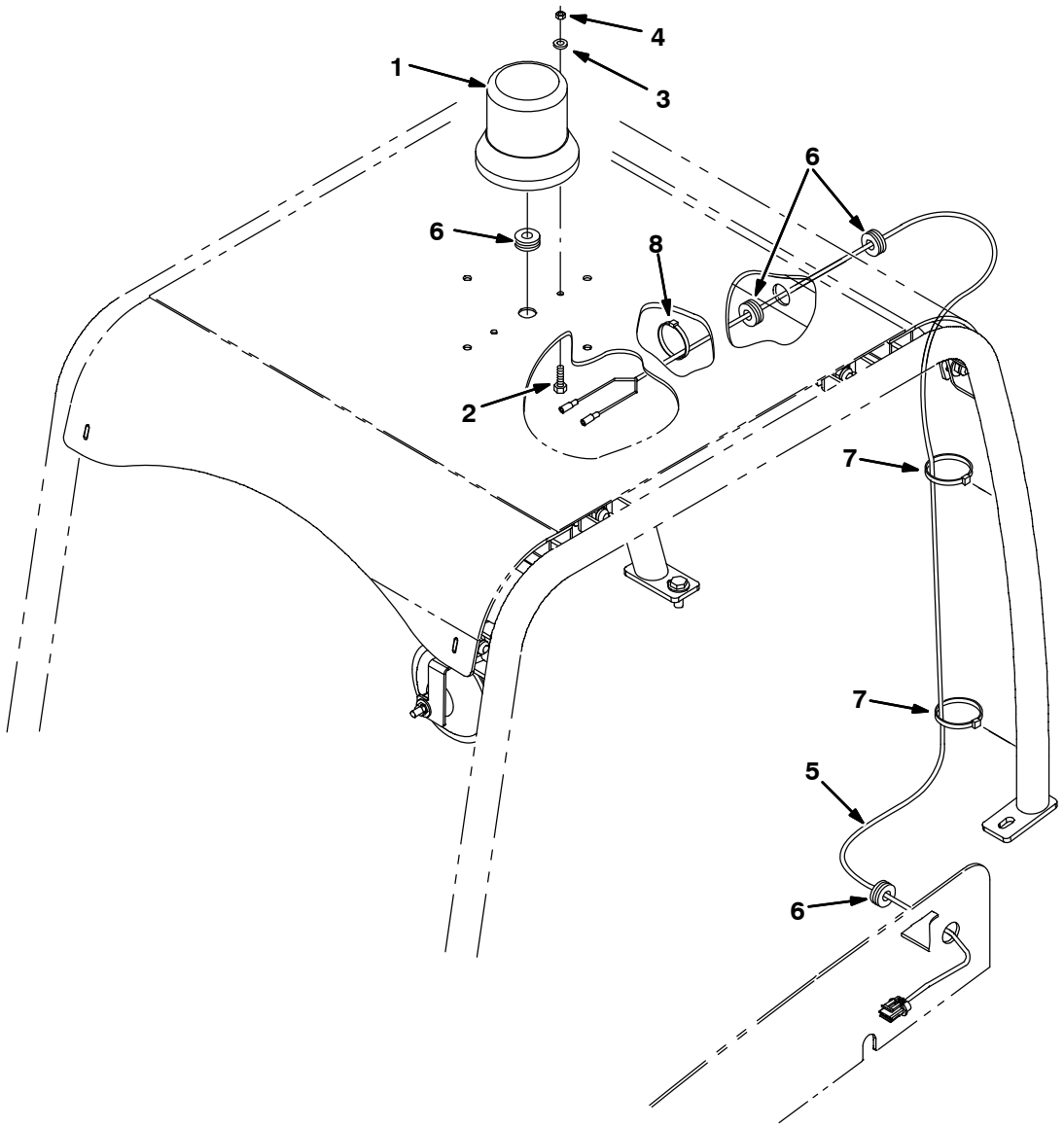

354477

	Ref.	Part No.	Serial Number	Description	Qty.
▽		9001718	(000000–)	Light Kit, Flsh, W/Ohg, Ci[M20 And T20]	1
▲▽	1	1017248	(000000–)	Lamp, Flasher, Amb [12–48 Vdc]	1
▲▲		9000879	(000000–)	Lens, Lamp, Amb, Strobe/Flasher	1
▲▲		9000846	(000000–)	Lamp, Bulb, Flsh	1
▲▲		1027800	(000000–)	Lens, Blue, Option, F/ Strobe / Flsh Light	1
▲▲		1027798	(000000–)	Lens, Red, Option, F/ Strobe / Flsh Light	1
▲		55272	(000000–)	Terminal, Bullet, Mal, .157d, 12ga	2
▲	2	24196	(000000–)	Screw, Pan, Phl, M5 X 0.80 X 20, Ss	2
▲	3	19066	(000000–)	Washer, Flat, 10	2
▲	4	09739	(000000–)	Nut, Hex, Lock, M5 X 0.80, Nl, Ss	2
▲	5	1019647	(000000–)	Harness, Warning / Ohg [M20]	1
▲	6	10632–17	(000000–)	Grommet, Rbr, 0.50id, F/0.8h, .12 Matl	4
▲	7	763115	(000000–)	Tie, Cable, 6.0l, 1.25d Max	4
▲	8	49266	(000000–)	Tie, Cable, Nyl, 07.3l .19w 1.8 Max D	2

Fig. 27 – Light Kit, Strobe Overhead Guard

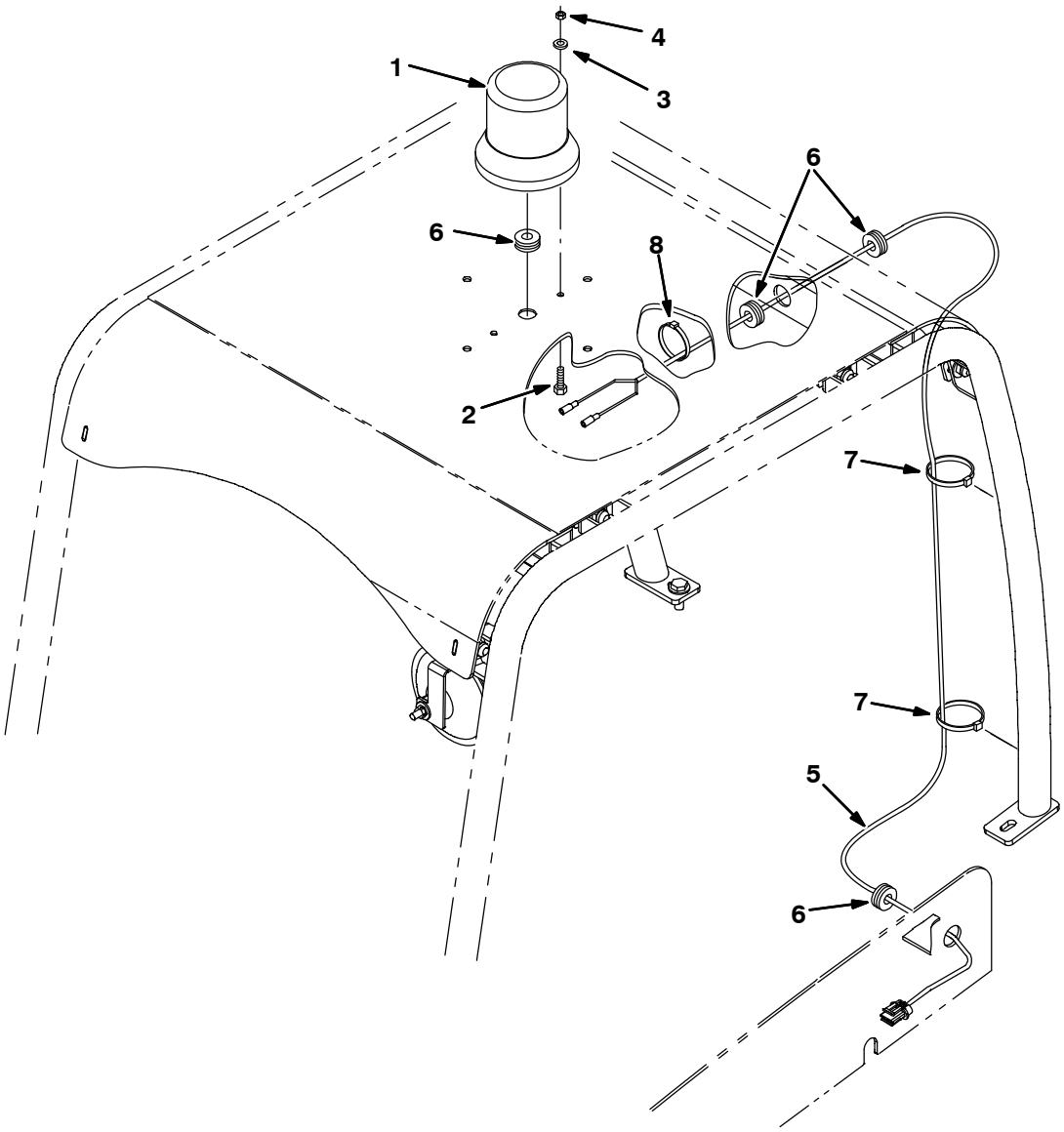

354477

	Ref.	Part No.	Serial Number	Description	Qty.
▽		9001717	(000000–)	Light Kit, Strobe, W/Ohg, Ci [M20 And T20]	1
▲▽	1	1017250	(000000–)	Lamp Strobe, Amb [12–48 Vdc]	1
▲▲		9000879	(000000–)	Lens, Lamp, Amb, Strobe/Flasher	1
▲▲		9000845	(000000–)	Lamp, Bulb, Strobe	1
▲▲		1027800	(000000–)	Lens, Blue, Option, F/ Strobe / Flsh Light	1
▲▲		1027798	(000000–)	Lens, Red, Option, F/ Strobe / Flsh Light	1
▲		55272	(000000–)	Terminal, Bullet, Mal, .157d, 12ga	2
▲	2	24196	(000000–)	Screw, Pan, Phl, M5 X 0.80 X 20, Ss	2
▲	3	19066	(000000–)	Washer, Flat, 10	2
▲	4	09739	(000000–)	Nut, Hex, Lock, M5 X 0.80, Nl, Ss	2
▲	5	1019647	(000000–)	Harness, Warning / Ohg [M20]	1
▲	6	10632–17	(000000–)	Grommet, Rbr, 0.50id, F/0.8h, .12 Matl	4
▲	7	763115	(000000–)	Tie, Cable, 6.0l, 1.25d Max	4
▲	8	49266	(000000–)	Tie, Cable, Nyl, 07.3l .19w 1.8 Max D	2

Fig. 28 – Overhead Guard Kit

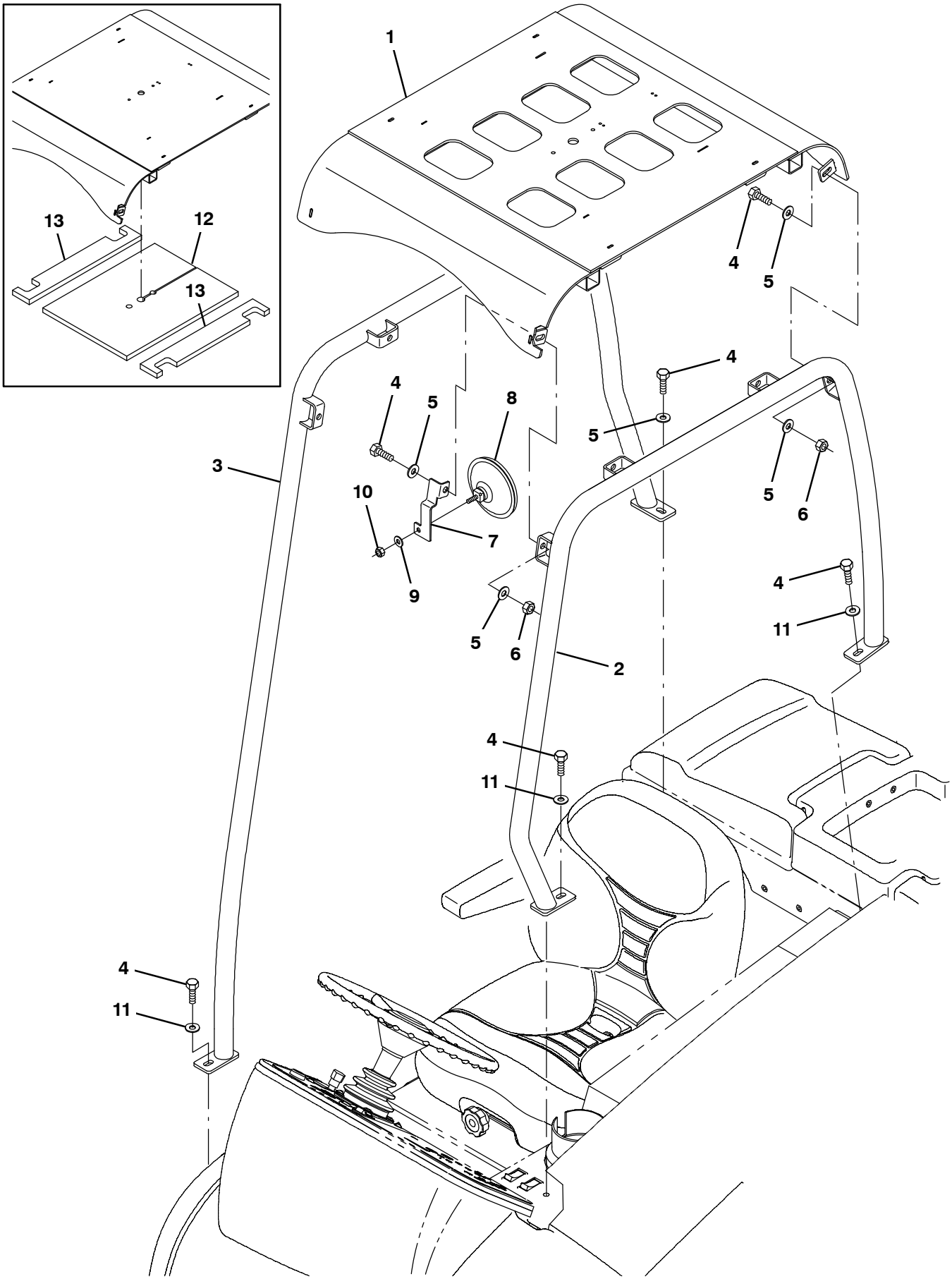

354478

Fig. 28 – Overhead Guard Kit

	Ref.	Part No.	Serial Number	Description	Qty.
▽		9001314	(000000–)	Ohg Kit, Ci [M20 And T20]	1
▲	1	1022276	(000000–)	Guard Wldt, Top, Ohg	1
▲	2	1069241	(000000–)	Tube Wldt, Leg, Ohg, Lh, Pntd	1
▲	3	1069253	(000000–)	Tube Wldt, Leg, Ohg, Rh, Pntd	1
▲	4	03192	(000000–)	Screw, Hex, M10 X 1.5 X 30, 8.8	12
▲	5	32492	(000000–)	Washer, Flat, 0.38 Std	17
▲	6	41430	(000000–)	Nut, Hex, Lock, M10 X 1.5, Nl	8
▲	7	1023879	(000000–)	Bracket, Mtg, Mirror, Rearview	1
▲	8	1050295	(000000–)	Mirror, Convex, 0.50D	1
▲	9	32491	(000000–)	Washer, Flat, 0.31, Std	1
▲	10	19313	(000000–)	Nut, Hex, Std, .31–18	1
▲	11	1014563	(000000–)	Washer, Flat, 0.40b 1.12d .12, Ss	3
	12	1032830	(000000–006913)	Insulation	1
	13	1032831	(000000–006913)	Insulation	2

Fig. 29 – Telemetry Group

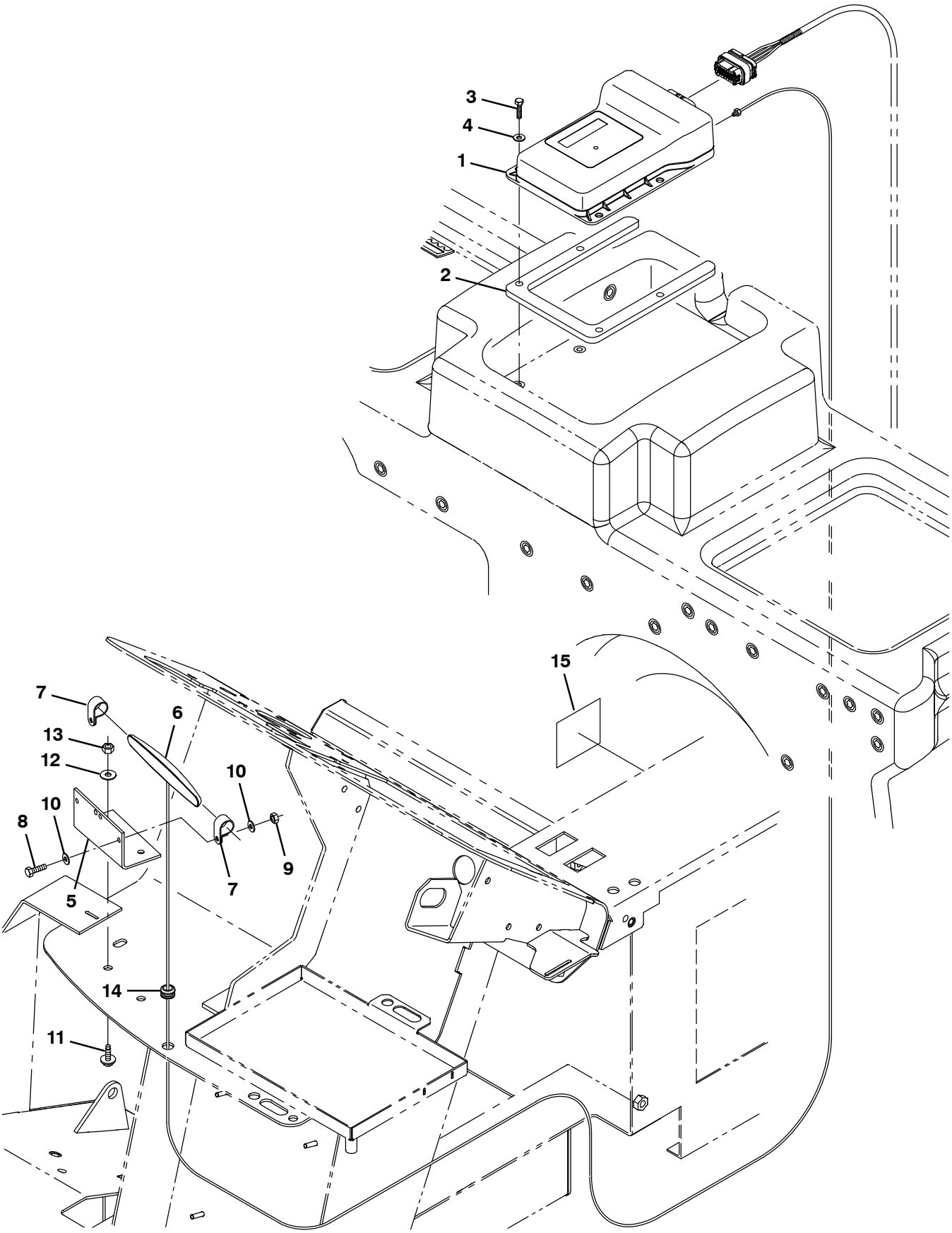

356266

Fig. 29 – Telemetry Group

Ref.	Part No.	Serial Number	Description	Qty.
1	9010085	(000000–)	Control Box Assy Kit, Replmt, Telem [USA]	1
1	9010086	(000000–)	Control Box Assy Kit, Replmt, Telem [CAN]	1
2	1071062	(000000–)	Bracket, Spacer, Controlbox	1
3	09252	(000000–)	Screw, Hex, M5 X 0.80 X 20, 8.8	4
4	01683	(000000–)	Washer, Flat, 10, Ss	4
5	1070402	(000000–)	Angle, Mtg, Antenna, Telem	1
6	1070659	(000000–)	Antenna, Telem, 70 In [Gprs]	1
7	140916	(000000–)	Clamp, Cable, Nyl, 0.62D, Nat	2
8	24199	(000000–)	Screw, Hex, M5 X 0.80 X 16, Ss	2
9	06549	(000000–)	Nut, Hex, Lock, M5 X 0.80, Nl	2
10	01683	(000000–)	Washer, Flat, 10, Ss	4
11	1040467	(000000–)	Screw, Hex, M6 X 1.00 X 20, 9.8, Sems	2
12	01684	(000000–)	Washer, Flat, 0.27B 0.69D .05, Ss	2
13	08712	(000000–)	Nut, Hex, Lock, M6 X 1.00, Nl, Ss	2
14	10632–12	(000000–)	Grommet, Rbr, 0.38id, F/0.5H, .12 Matl	1
15	1069580	(000000–)	Label, Opertnl, Telem [Fcc/Ic]	1

Fig. 30 – Telemetry Wire Harness Group

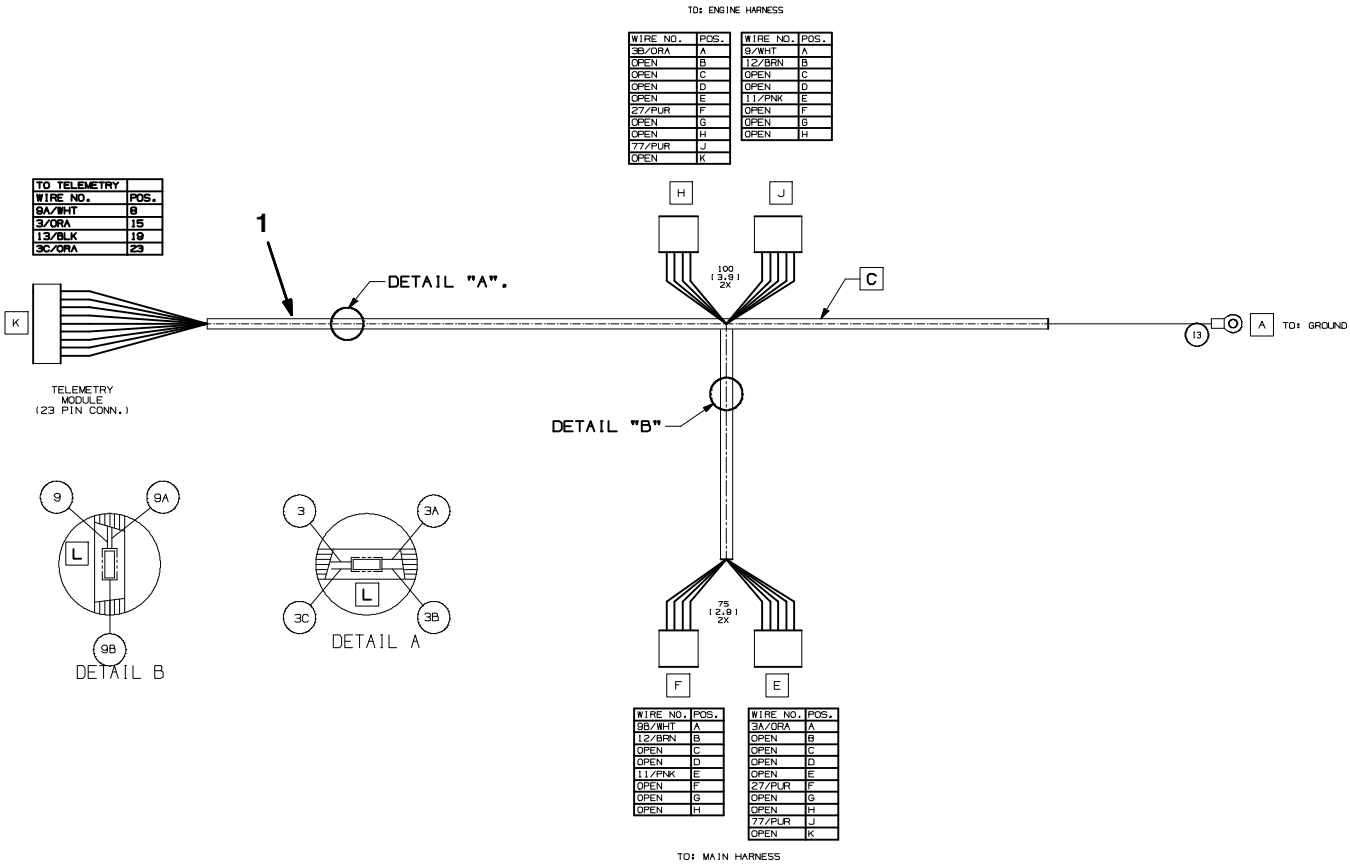

D

Fig. 30 – Telemetry Wire Harness Group

Ref.	Part No.	Serial Number	Description	Qty.
1	1069876	(000000–)	Harness, Wire, Dsl [M20/T20, Telemetry]	1

Fig. 31 – Vacuum Wand Kit (000000–002406)

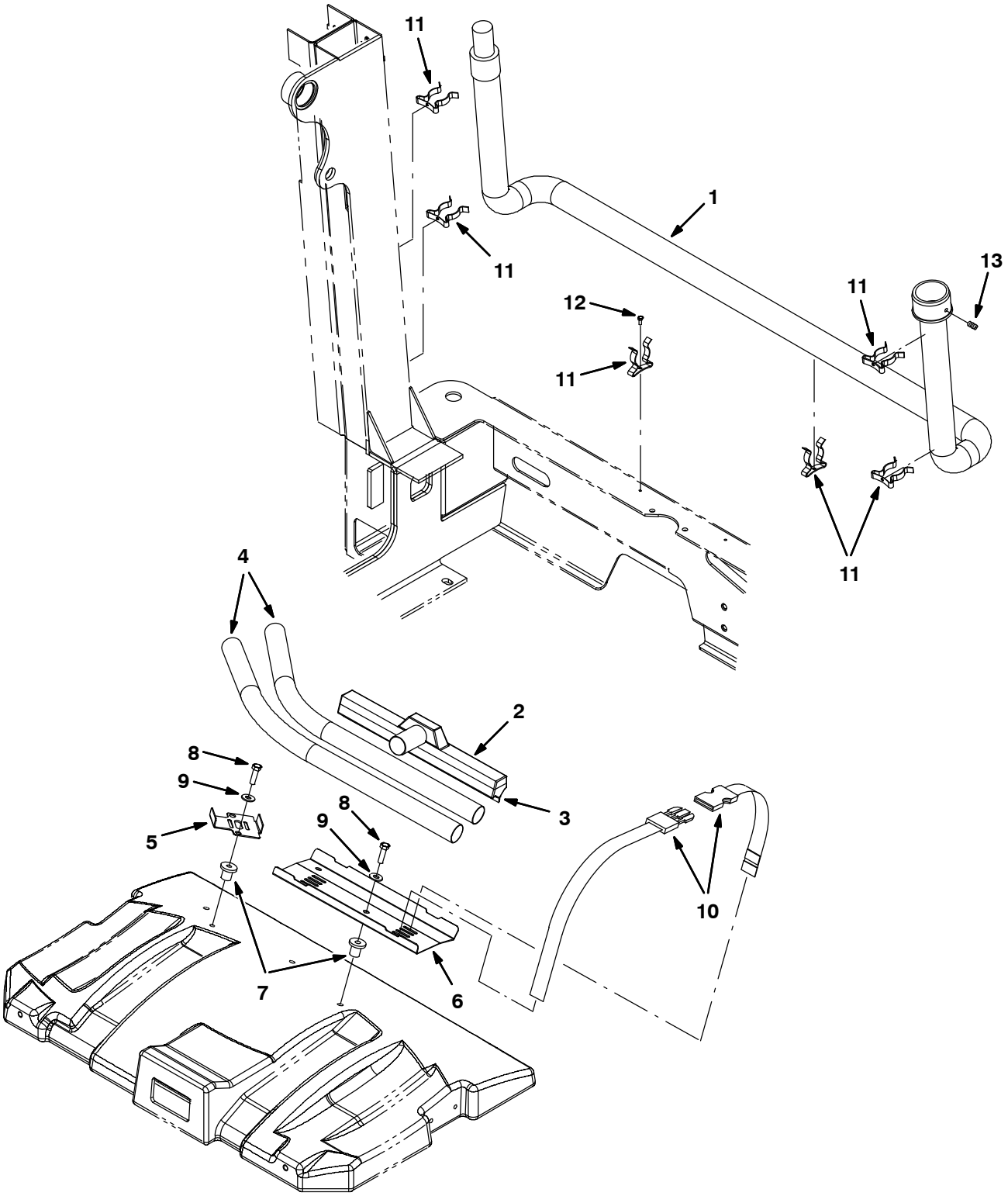

354479

Fig. 31 – Vacuum Wand Kit (000000–002406)

	Ref.	Part No.	Serial Number	Description	Qty.
▽		9001334	(000000–002406)	Wand Kit, Vacuum, Ci [M20]	1
▲	1	69657	(000000–002406)	Hose Assy, W/2cuff, 1.5d 84l [Vacwand]	1
▲	2	63451	(000000–002406)	Nozzle, Wand, Plstc, 14.0lg	1
▲	3	63430	(000000–002406)	Shoe, Plstc, Sqge, 14.0	1
▲	4	63448	(000000–002406)	Tube, Wand, Vacuum, Metal [1pick=1box]	1
▲	5	1030549	(000000–002406)	Bracket, Mtg, Vacuum Wand	1
▲	6	1026146	(000000–002406)	Plate, Mtg, Vacuum Wand	1
▲	7	397648	(000000–002406)	Nut, Isolator, .38–16 Wall Th .015–.437	4
▲	8	21198	(000000–002406)	Screw, Hex, .38–16 X 1.25, 5	4
▲	9	32492	(000000–002406)	Washer, Flat, 0.38 Std	4
▲	10	367974	(000000–002406)	Strap, Pyp, 0.07 1.0w 18.5l, W/ Buckle	3
▲	11	67004	(000000–002406)	Clip, Grip, Finger, 1.00–1.88d White,Vyl	6
▲	12	55845	(000000–002406)	Screw, Hex, M5 X 0.8 X 16, Fmg	6
▲	13	69659	(000000–002406)	Plunger	1

Fig. 32 – Vacuum Wand Kit (002407–)

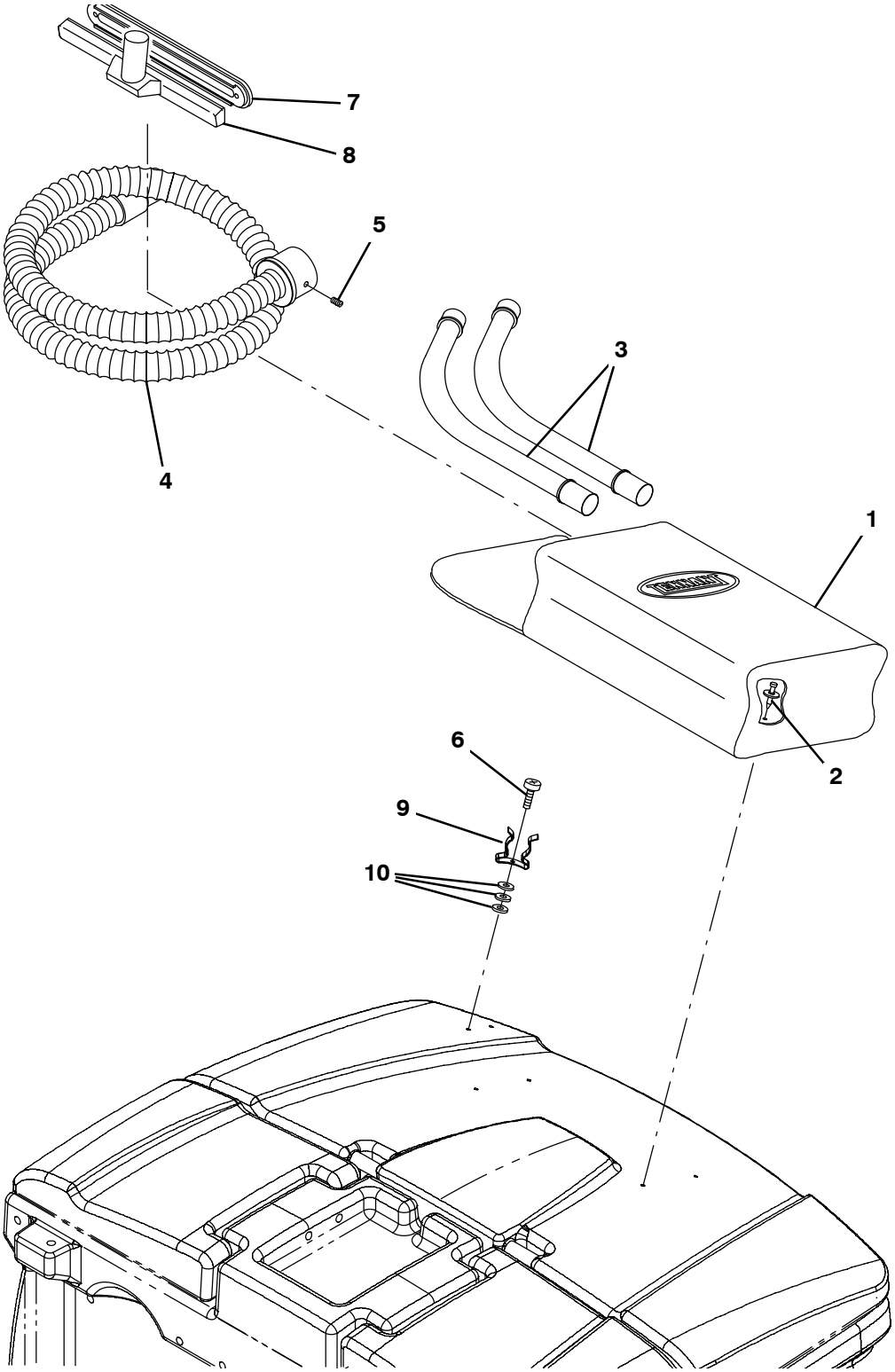

354659

Fig. 32 – Vacuum Wand Kit (002407–)

	Ref.	Part No.	Serial Number	Description	Qty.
▽		9001334	(002407–)	Wand Kit, Vacuum, Ci [M20]	1
▲	1	65580	(002407–)	Bag, Power	1
▲	2	72968	(002407–)	Rivet, Plstc, .250d X 0.90	4
▲	3	63448	(002407–)	Tube, Wand, Vacuum, Metal	1
▲	4	69657	(002407–)	Hose Assy, W/2cuff, 1.5d 084l [Vacwand]	1
▲	5	69659	(002407–)	Plunger	1
▲	6	55845	(002407–)	Screw, Hex, M5 X 0.80 X 16, Fmg	2
▲	7	63430	(002407–)	Shoe, Plstc, Sqge, 14.0	1
▲	8	63451	(002407–)	Nozzle, Wand, Plstc, 14.0l	1
▲	9	67004	(002407–)	Clip, Grip, Finger, 1.00–1.88d White,Vyl	2
▲	10	19064	(002407–)	Washer, Flat, 06	6

Fig. 33 – Spray Nozzle Kit

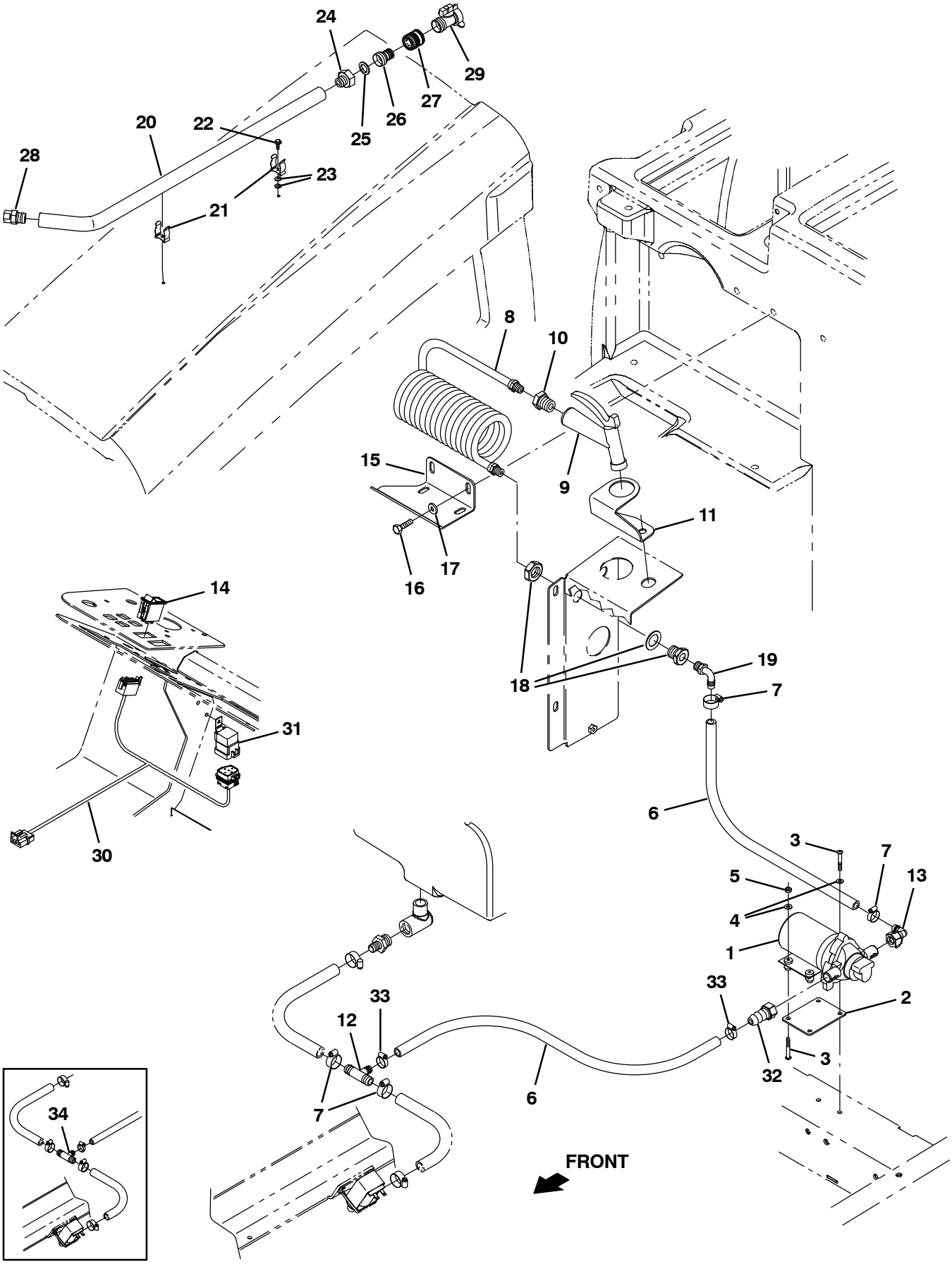

354480

Fig. 33 – Spray Nozzle Kit

	Ref.	Part No.	Serial Number	Description	Qty.
▽		9001310	(000000–)	Nozzle Kit, Spray, Ci	1
▲	1	1026743	(000000–)	Pump, Diaphragm (See Breakdowns)	1
▲	2	1027007	(000000–)	Plate, Mtg, Pump	1
▲	3	06939	(000000–)	Screw, Pan, M5 X 0.80 X 45, 4.8	4
▲	4	19066	(000000–)	Washer, Flat, #10	4
▲	5	06549	(000000–)	Nut, Hex, Lock, M5 X 0.80, Nl	2
▲	6	1015045	(000000–)	Hose, Afmkt, Pvc, Brd, 0.75id, 08ft, Clr	1
▲	7	63810	(000000–)	Clamp, Hose, Wormdrive, 0.56–1.06d, .56w	4
▲	8	1019250	(000000–)	Hose, Water, Coil	1
▲	9	769785	(000000–)	Nozzle, Spray, Gun	1
▲	10	1027976	(000000–)	Fitting, Brs, Str, Pf06/Pm12	1
▲	11	1027237	(000000–)	Bracket, Mtg, Spray Handle	1
▲	12	1015486	(007260–)	Fitting, Plstc, Tee, Bm08/Bm10/Bm10, Br	1
▲	13	1018499	(000000–)	Fitting, Plstc, E90, Bm08/Pf08s, Swivel	1
▲	14	398500	(000000–)	Switch, Rocker, Dpdt On/None/On	1
▲	15	1029790	(000000–)	Bracket, Mtg, Spray Wand [FaST, Conv]	1
▲	16	09740	(000000–)	Screw, Hex, M8 X 1.25 X 20, Ss	2
▲	17	1017218	(000000–)	Washer, Flat, 0.32b 1.00d .12, Ss	2
▲	18	1027978	(000000–)	Fitting, Brs, Str, Pf06/Pf06 Bh	1
▲	19	64778	(000000–)	Fitting, Plstc, E90, Bm08/Pm06	1
▲	20	1029055	(000000–)	Wand, Clean–Out	1
▲	21	1029057	(000000–)	Clip, Grip, Finger, .875–1.25	2
▲	22	20394	(000000–)	Screw, Hex, #10–16 X 0.62, Fmg [Ab]	2
▲	23	01683	(000000–)	Washer, Flat, #10, Ss	4
▲	24	375321	(000000–)	Fitting, Brs, Str, Pm08/Garden Hose	1
▲	25	01316	(000000–)	Washer, Flat, 0.66b 1.00d .12, Rbr	1
▲	26	1029153	(000000–)	Nipple, Hose	1
▲	27	1029155	(000000–)	Coupling, Nozzle, Spray	1
▲	28	1029156	(000000–)	Nozzle	1
▲	29	1029399	(000000–)	Valve, Shutoff	1
▲	30	1021881	(000000–)	Harness, Spray, Nozzle	1
▲	31	56186	(000000–)	Relay, 12vdc, 40a, Spdt N/O	1
▲	32	1018495	(000000–)	Fitting, Plstc, Str, Bm08/Pf08s, Swivel	1
▲	33	54333	(000000–)	Clamp, Hose, Wormdrive, 0.31–0.88d, .31w	2
	34	385644	(000000–007259)	Fitting, Plstc, Tee, Bm08/Bm12/Bm12, Br	1

Fig. 34 – Transport Kit

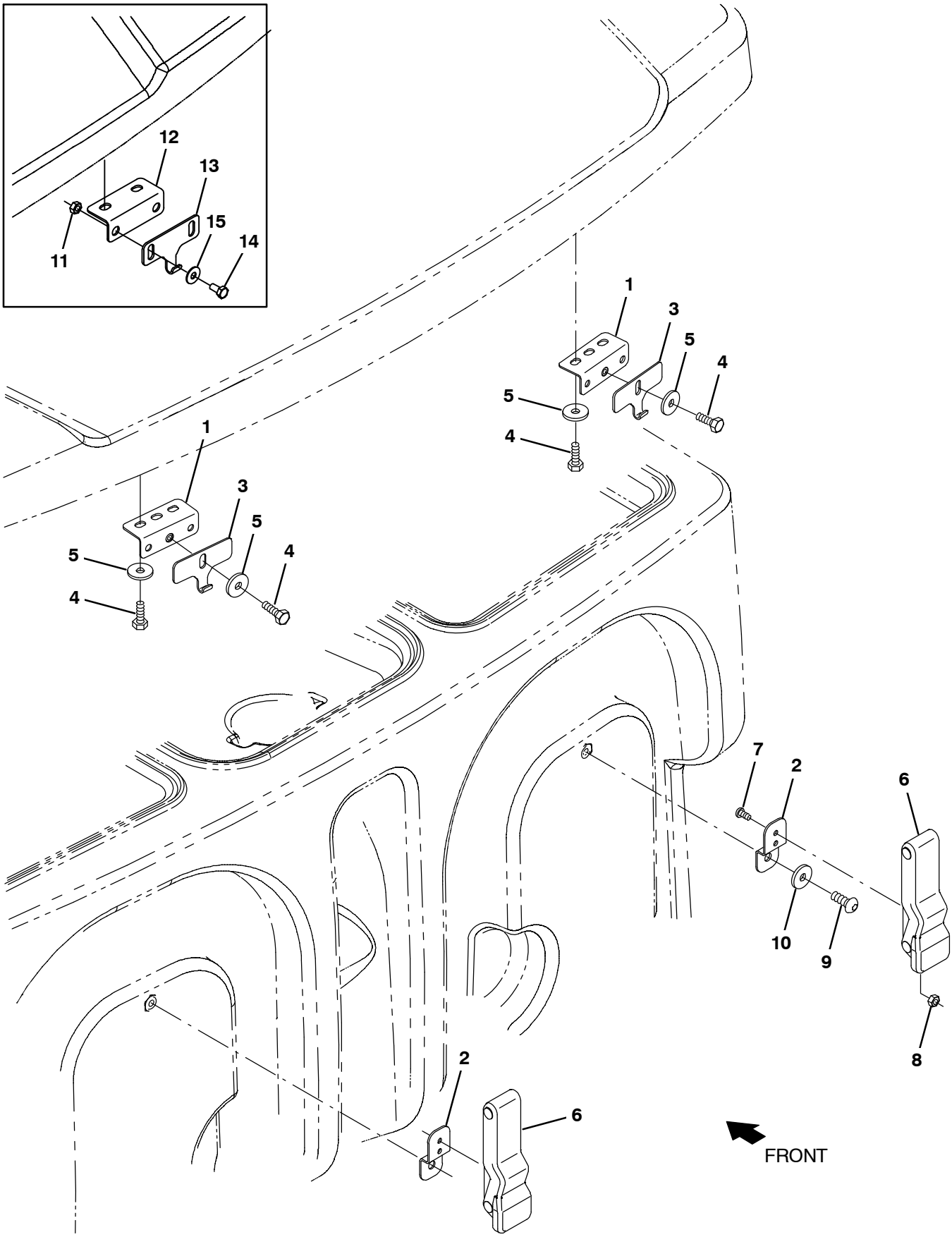

354481

Fig. 34 – Transport Kit

	Ref.	Part No.	Serial Number	Description	Qty.
▽		9014867	(002473–)	Transport Kit, Ci [M20/M30}	1
▲	1	1040800	(002473–)	Bracket, Latch, Cover	2
▲	2	1020526	(000000–)	Bracket, Retaining, Hose	2
▲	3	1040634	(002473–)	Plate, Hook, Latch	2
▲	4	09744	(002473–)	Screw, Hex, M6 X 1.00 X 12, Ss	6
▲	5	01684	(002473–)	Washer, Flat, 0.27b 0.69d .05, Ss	6
▲	6	360824	(000000–)	Latch	2
▲	7	09200	(000000–)	Screw, Pan, Phl, M5 X 0.80 X 12, Ss	4
▲	8	09739	(000000–)	Nut, Hex, Lock, M5 X 0.80, Nl, Ss	4
▲	9	393135	(000000–)	Screw, Btn, M8 X 1.25 X 20, Blk	2
▲	10	32491	(000000–)	Washer, Flat, 0.31, Std	2
	11	08712	(000000–002472)	Nut, Hex, Lock, M6 X 1.00, Nl, Ss	4
	12	1032869	(000000–002472)	Bracket, Latch, Cover	2
	13	1032896	(000000–002472)	Plate, Hook, Latch, [M20]	2
	14	09744	(000000–002472)	Screw, Hex, M6 X 1.0 X 12, Ss	4
	15	01684	(000000–002472)	Washer, Flat, 0.25, Ss	4

Fig. 35 – Squeegee Guard Kit

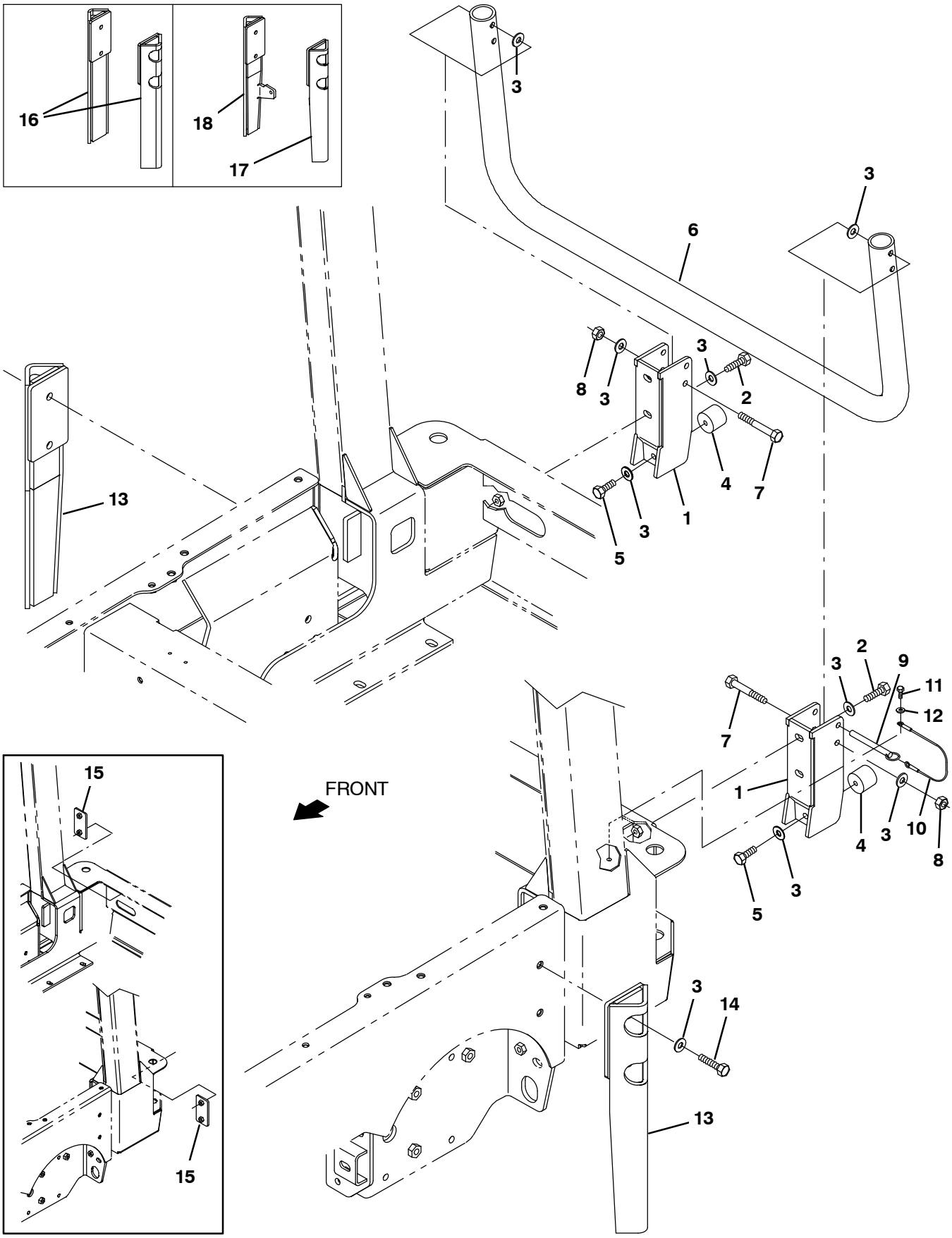

354482

Fig. 35 – Squeegee Guard Kit

	Ref.	Part No.	Serial Number	Description	Qty.
▽		9001338	(000000–)	Guard Kit, Sqge, Ci [M20]	1
▲	1	1027560	(000000–)	Bracket Wldt, Guard, Sqge	2
▲	2	39284	(000000–)	Screw, Hex, M10 X 1.5 X 35, 8.8	4
▲	3	32492	(000000–)	Washer, Flat, 0.38 Std	14
▲	4	1024977	(000000–)	Bumper, Ure, 1.50d 1.25l	2
▲	5	21196	(000000–)	Screw, Hex, .38–16 X 0.88, 5	2
▲	6	1056195	(000000–)	Guard Wldt, Pntd [M20/T20]	1
▲	7	06965	(000000–)	Screw, Hex, M10 X 1.5 X 80, 8.8	2
▲	8	41430	(000000–)	Nut, Hex, Lock, M10 X 1.5, Nl	2
▲	9	369359	(000000–)	Pin, Hitch, .375d X 3.12l, Pl	1
▲	10	57702	(000000–)	Cable, Glv .06d 012.0l .26eye /.26eye	1
▲	11	09738	(000000–)	Screw, Hex, M5 X 0.8 X 12, Ss	1
▲	12	01683	(000000–)	Washer, Flat, #10, Ss	1
▲	13	1045444	(xxxxxx–)	Guard Wldt, Sqge [M20/T20/M30]	2
▲	14	06962	(000000–)	Screw, Hex, M10 X 1.5 X 45, 8.8	4
	15	1029543	(000000–004292)	Plate, Mtg	2
	16	1025663	(000000–002435)	Guard Wldt, Sqge	2
	17	1040863	(002436–xxxxxx)	Guard Wldt, Sqge [M20/T20 Lh, M30 Rh]	1
	18	1040871	(002436–xxxxxx)	Guard Wldt, Sqge [M20/T20 Rh, M30 Lh]	1

Fig. 36 – Fire Extinguisher Kit

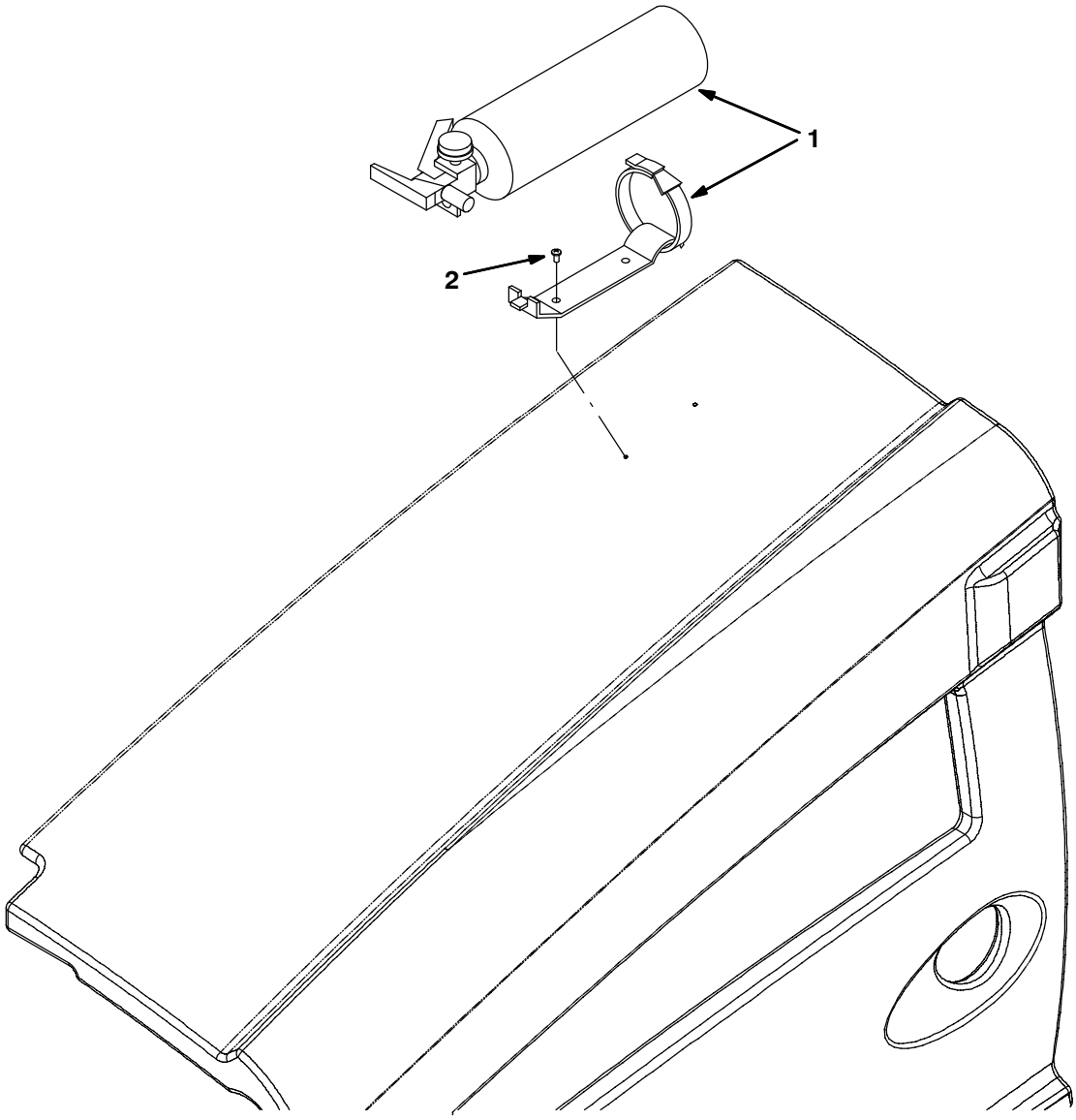

354484

Ref.	Part No.	Serial Number	Description	Qty.
	9001316	(000000–)	Extinguisher Kit, Fire, Ci [M20 And T20]	1
1	25312	(000000–)	Extinguisher, Fire, 2.5 Lb Dry	1
2	382320	(000000–)	Screw, Pan, #12–16 X 0.50, F/ Plstc	2

Fig. 37 – Documentation Group

Ref.	Part No.	Serial Number	Description	Qty.
	331410	(000000–)	Manual, Oprtr [M20 Dsl En]	1
	1032578	(000000–)	Instr, Maint, Wall Chart [M20]	1
	331411	(000000–)	Manual, Parts [M20 Dsl En/Jp]	1
	331412	(000000–)	Manual, Oprtr [M20 Dsl Es]	1
	331413	(000000–)	Manual, Oprtr [M20 Dsl Fr]	1
	331385	(000000–)	Manual, Service [M20 En]	1
	1027759	(000000–)	Video, Oprtr, Dvd [W/Checklist M20]	1
	84660	(000000–)	Manual, Eng [Kubo, V1505e]	1
	9006257	(000000–)	Media, Cd–Rom, Training [ec–H2O Tennant]	1

To view, print, order, download the latest Parts manual, other language Operator manuals, and Use and Care Guides (wall charts), visit:

www.tennantco.com/manual

SECTION 4

Contents **Page**

Fig. 1 – Extended Scrub Pump Breakdown, 1021210 4-2
Fig. 2 – Hydraulic Motor Breakdown, 379609 . . . 4-4
Fig. 3 – Hydraulic Pump Breakdown, 1024251 . . 4-6
Fig. 4 – Hydraulic Motor Breakdown, 71729 4-8
Fig. 5 – Hydraulic Motor Breakdown, 1029379 . . 4-9
Fig. 6 – Hydraulic Motor Breakdown, 53485 . . . 4-10
Fig. 7 – Hydraulic Valve Breakdown, 1018936 . 4-11
Fig. 8 – Hydraulic Valve Breakdown, 1018938 . 4-12
Fig. 9 – Hydraulic Valve Breakdown, 1037805 . 4-14
Fig. 10 – Hydraulic Valve Breakdown, 1072997 . 4-16
Fig. 11 – Hydraulic Valve Breakdown, 1020394 . 4-18
Fig. 12 – Hydraulic Valve Breakdown, 1038566 . 4-20
Fig. 13 – Hydraulic Valve Breakdown, 1072995 . 4-22
Fig. 14 – Hydraulic Steering Valve Breakdown, 1024260 4-24
Fig. 15 – Metering Solution Pump Breakdown, 73260 4-26
Fig. 16 – Water Pump Breakdown, 1026743 . . . 4-27
Fig. 17 – ec–H20 Module Assembly Breakdown, 9007882 4-28
Fig. 18 – Seat Breakdown, 1072456 4-30
Fig. 19 – FaST Injector Assembly Breakdown, 9008868 4-32

Fig. 1 – Extended Scrub Pump Breakdown, 1021210

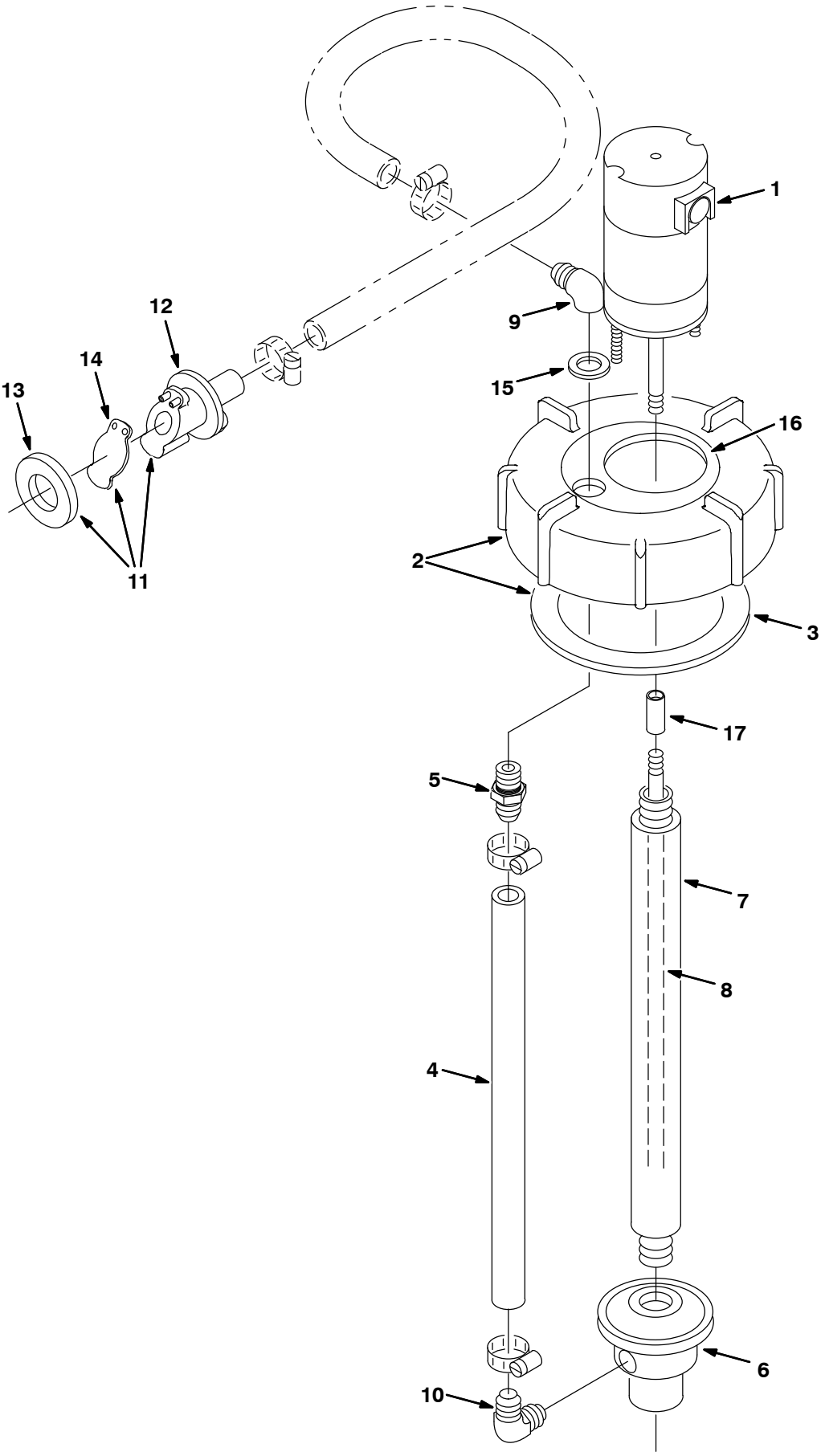

354377 – ALL

Fig. 1 – Extended Scrub Pump Breakdown, 1021210

	Ref.	Part No.	Serial Number	Description	Qty.
▽		1021210	(000000–)	Pump Assy, Column, Es	1
▲▽	1	9002708	(000000–)	Motor, Ele, 12vdc, Pump, Water	1
▲▲		78829	(000000–)	Kit, Brush, Motor, Ele	1
▲▽	2	24358	(000000–)	Cap Assy, Tank, Drain	1
▲▲	3	1031699	(000000–)	Gasket, 4.05id 5.29od .19 [Buna]	1
▲	4	78833	(000000–)	Tube, Vinyl, Pump, Water	1
▲	5	78398	(000000–)	Fitting, Plstc, Str, Bm12/Pm08, Nyl	1
▲	6	78843	(000000–)	Housing Kit, Pump, Water	1
▲	7	78836	(000000–)	Column, Pump, Water	1
▲	8	9002709	(000000–)	Shaft, Pump, Water	1
▲	9	78838	(000000–)	Fitting, E, Gr	1
▲	10	78839	(000000–)	Fitting, Plstc, E90, Pf Bm [Es Pump]	1
▲▽	11	78842	(000000–)	Kit, Valve, Check, Pump, Water	1
▲▲	12	78840	(000000–)	Valve, Check, Pump, Water	1
▲▲	13	73342	(000000–)	Gasket, .25 1.88d 1.0id [Poron]	1
▲▲	14	78841	(000000–)	Flapper, Valve, Pump, Water	1
▲	15	78830	(000000–)	Washer, Rbr	1
▲	16	22790	(000000–)	Insert, Cap, Mount, Es Pump	1
▲	17	23285	(000000–)	Sleeve, Pump, Water	1

Fig. 2 – Hydraulic Motor Breakdown, 379609

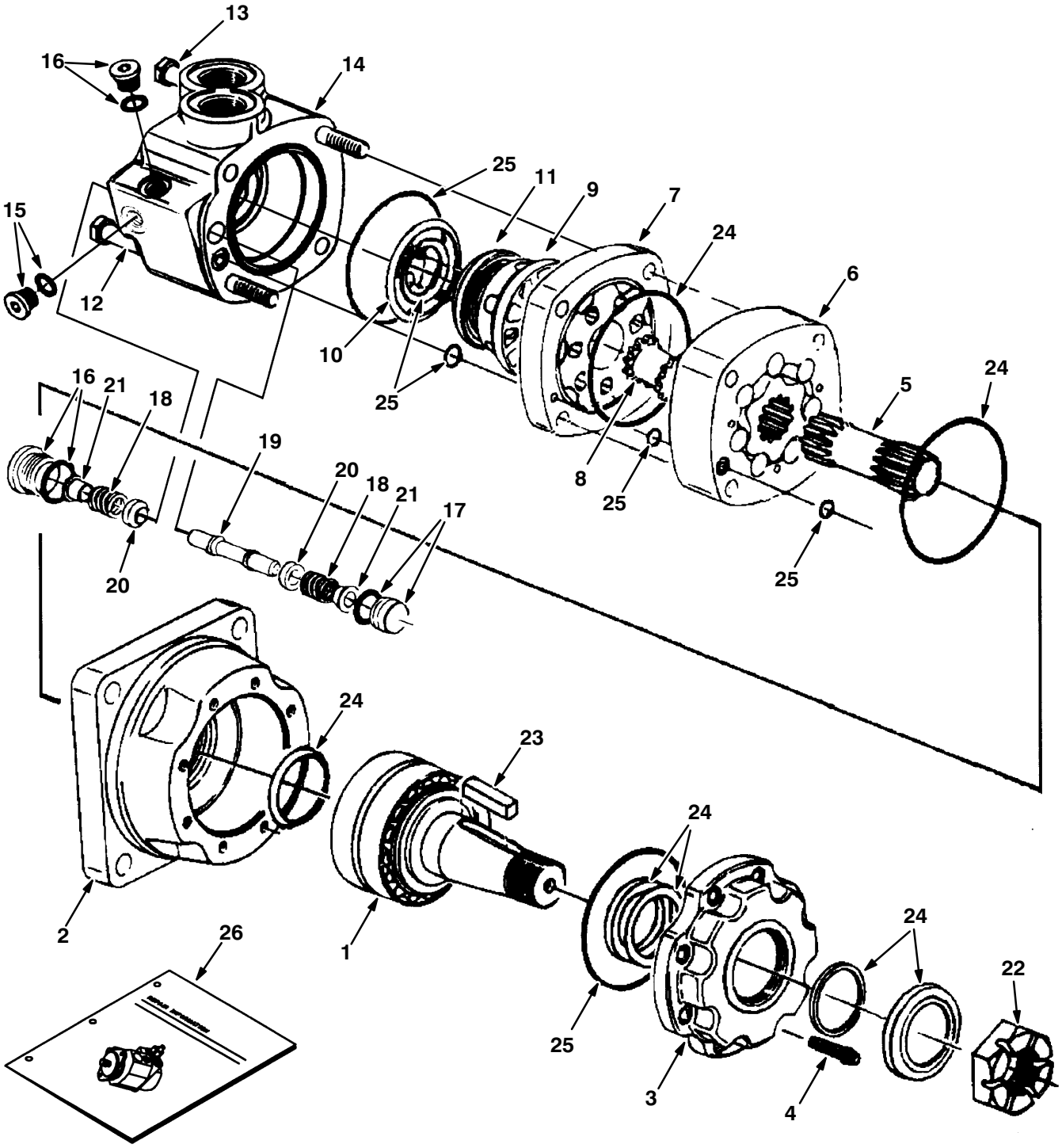

350628–09670

Fig. 2 – Hydraulic Motor Breakdown, 379609

	Ref.	Part No.	Serial Number	Description	Qty.
▽		379609	(000000–)	Motor, Hyd, Gear, [Int], 19.0 X 3000	1
▲	1	74165	(000000–)	Shaft, Motor, Hyd	1
▲	2	74166	(000000–)	Housing, Brg, Motor, Hyd	1
▲	3	74167	(000000–)	Retainer, Motor, Hyd	1
▲	4	74168	(000000–)	Screw, Cap, Motor, Hyd	8
▲	5	37616	(000000–)	Drive, Motor, Hyd	1
▲	6	37756	(000000–)	Geroler, Motor, Hyd	1
▲	7	74122	(000000–)	Plate, Valve, Motor, Hyd	1
▲	8	52405	(000000–)	Valve, Motor, Hyd	1
▲	9	74123	(000000–)	Valve, Motor, Hyd	1
▲	10	34178	(000000–)	Spring, Motor, Hyd	2
▲	11	38968	(000000–)	Ring, Motor, Hyd	1
▲	12	74125	(000000–)	Bolt, Motor, Hyd	3
▲	13	38255	(000000–)	Bolt, Motor, Hyd	1
▲	14	373297	(000000–)	Housing, Valve	1
▲	15	373298	(000000–)	Plug	1
▲	16	373260	(000000–)	Plug, Pump, Hyd, Gear	2
▲	17	373299	(000000–)	Plug	1
▲	18	373291	(000000–)	Spring	2
▲	19	373217	(000000–)	Piston, Pump, Hyd, Gear	1
▲	20	373226	(000000–)	Poppet, Pump, Hyd, Gear	2
▲	21	373236	(000000–)	Sleeve, Dashpo, Pump, Hyd, Gear	2
▲	22	45622	(000000–)	Nut, Motor, Hyd	1
▲	23	45623	(000000–)	Key, Motor, Hyd	1
▲	24	79828	(000000–)	Kit, Seal, Motor, Hyd	1
▲	25	33580	(000000–)	Kit, Seal, Motor, Hyd	1
	26	79729	(000000–)	Instr, Repair, Motor, Hyd, Gear	1

Fig. 3 – Hydraulic Pump Breakdown, 1024251

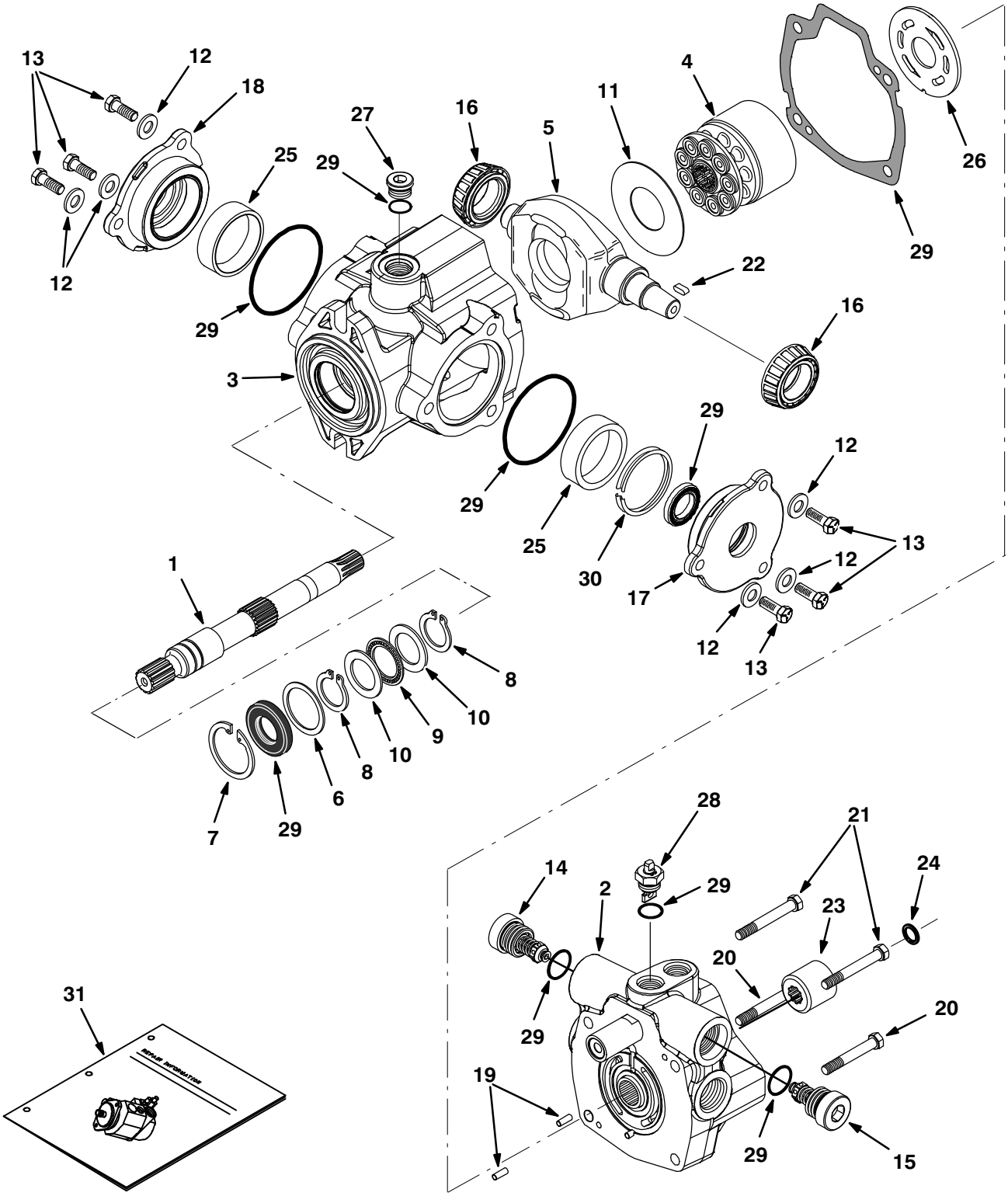

ALL

Fig. 3 – Hydraulic Pump Breakdown, 1024251

	Ref.	Part No.	Serial Number	Description	Qty.
▽		1024251	(000000–)	Pump, Hyd, Piston, Var, 1.24 4000, Cw	1
▲	1	373681	(000000–)	Shaft, Pump	1
▲	2	373427	(000000–)	Cover, End	1
▲	3	373389	(000000–)	Housing	1
▲	4	02706	(000000–)	Pump Kit, Hyd, Rotating [Cessna]	1
▲	5	373493	(000000–)	Plate, Cam	1
▲	6	70096	(000000–)	Washer, Flat, Pump, Hyd	1
▲	7	55926	(000000–)	Ring, Retaining, Pump, Hyd	1
▲	8	373434	(000000–)	Ring, Retaining	2
▲	9	74225	(000000–)	Bearing, Thrust, Pump, Hyd	1
▲	10	74226	(000000–)	Race, Brg, Pump, Hyd	2
▲	11	373327	(000000–)	Insert, Plt, Cam, Pump, Hyd	1
▲	12	373391	(000000–)	Washer, Pump, Hyd [En]	6
▲	13	373346	(000000–)	Screw, Cap	6
▲	14	373494	(000000–)	Valve, Relief, 4000 Psi	1
▲	15	373678	(000000–)	Valve, Relief, 3000 Psi	1
▲	16	373317	(000000–)	Bearing, Cone, Pump, Hyd	2
▲	17	373393	(000000–)	Plate, Cover	1
▲	18	373394	(000000–)	Plate, Cover	1
▲	19	70100	(000000–)	Pin, Dowel, Pump, Hyd	2
▲	20	373347	(000000–)	Screw, Cap	2
▲	21	373348	(000000–)	Screw, Cap	2
▲	22	74237	(000000–)	Key, Shaft, Pump, Hyd	1
▲	23	373679	(000000–)	Coupler, Pump	1
▲	24	373680	(000000–)	Ring, Lock	1
▲	25	373395	(000000–)	Bearing, Cup	2
▲	26	74180	(000000–)	Plate, Valve, Pump, Hyd	1
▲	27	13907	(000000–)	Fitting, Hyd, Plug, Om08	1
▲	28	373413	(000000–)	Actuator, Valve, By–Pass [En]	1
▲	29	373398	(000000–)	Seal Kit, Pump, Hyd	1
▲	30	373402	(000000–)	Shim Kit	1
	31	373429	(000000–)	Instr, Repair, Pump	1

Fig. 4 – Hydraulic Motor Breakdown, 71729

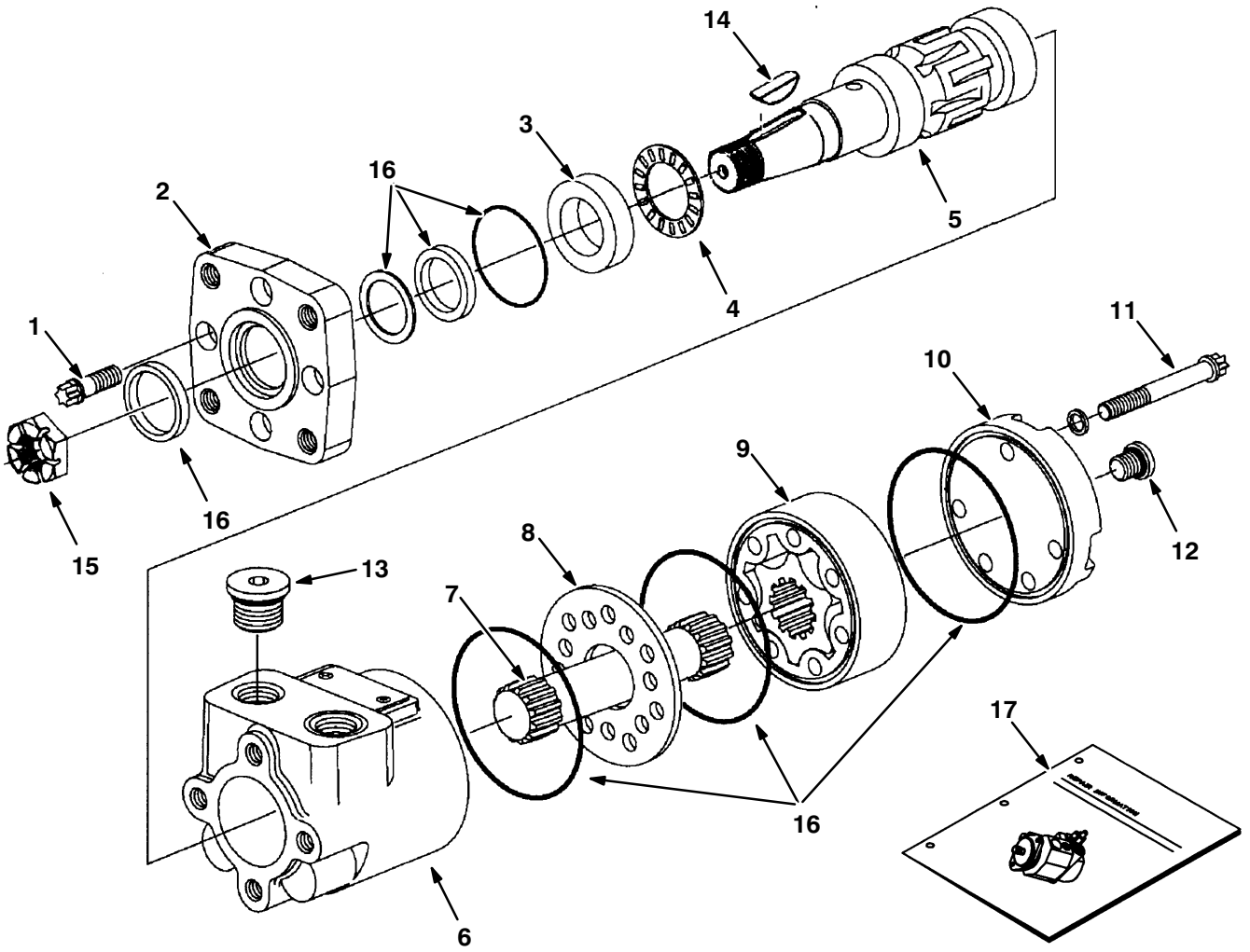

09606–09670 – ALL

	Ref.	Part No.	Serial Number	Description	Qty.
▽		71729	(000000–)	Motor, Hyd Gear In 4.5 B 1500	1
▲	1	37555	(000000–)	Screw	4
▲	2	31354	(000000–)	Flange Mounting	1
▲	3	16695	(000000–)	Race Thrust	1
▲	4	45628	(000000–)	Thrust Bearing	1
▲	5	31375	(000000–)	Shaft, Output	1
▲	6	74100	(000000–)	Housingl	1
▲	7	31379	(000000–)	Drive	1
▲	8	74094	(000000–)	Spacer Plate	1
▲	9	31383	(000000–)	Gerotor Set	1
▲	10	74095	(000000–)	End Cap	1
▲	11	65241	(000000–)	Cap Screw	5
▲	12	74098	(000000–)	Plug #4	1
▲	13	74099	(000000–)	Plug #10	2
▲	14	00500–15	(000000–)	Key–Wdruff 0.25 1.00	1
▲	15	39527	(000000–)	Nut–Hxslot .75–16 Pltd	1
▲	16	61490	(000000–)	Seal Replmt Kit	1
▲	17	74250	(000000–)	Instr. Repair Info, Motor	1

Fig. 5 – Hydraulic Motor Breakdown, 1029379

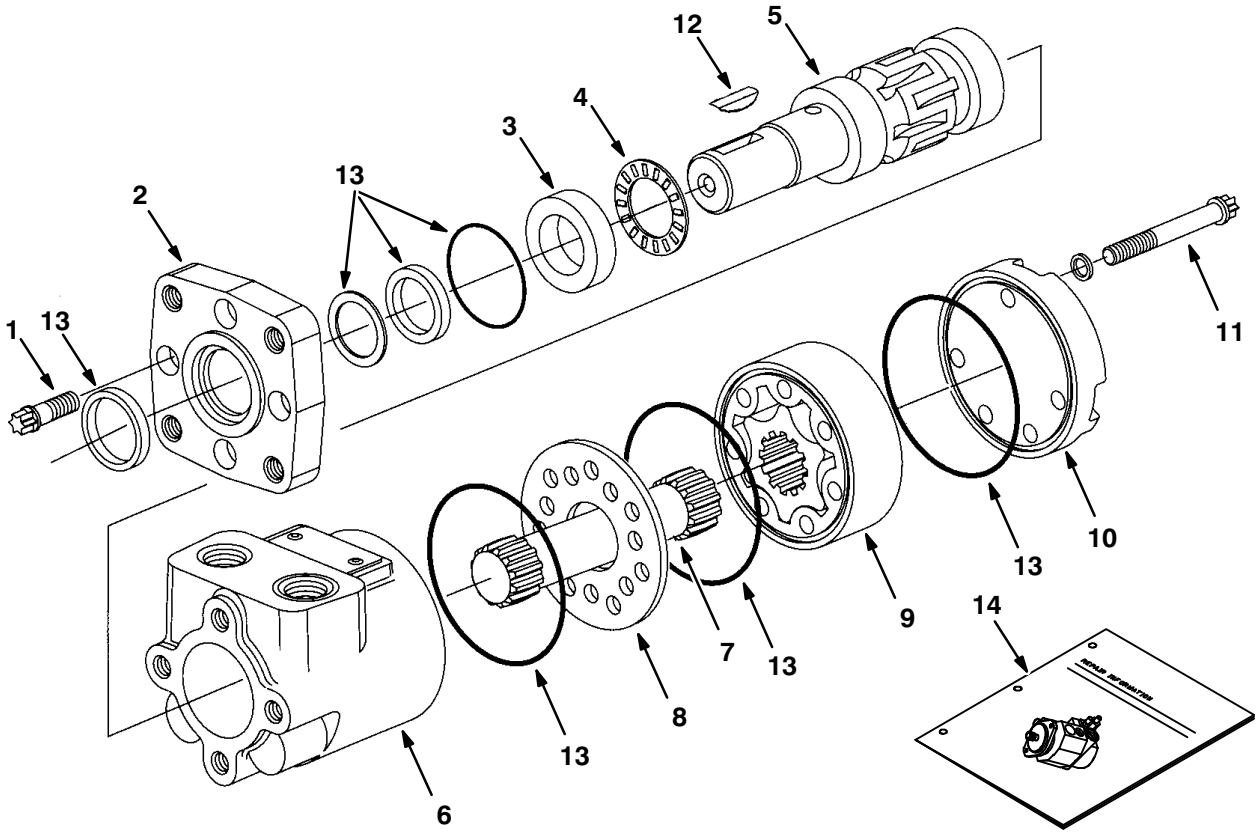

10859–09670 – ALL

	Ref.	Part No.	Serial Number	Description	Qty.
▽		1029379	(000000–)	Motor, Hyd, Gear, Int 08.9 Bi–Dir 2500	1
▲	1	37555	(000000–)	Screw, Motor, Hyd [En]	4
▲	2	31354	(000000–)	Flange, Motor, Hyd [En]	1
▲	3	16695	(000000–)	Ace, Thrust, Motor, Hyd [En]	1
▲	4	45628	(000000–)	Bearing, Thrust	1
▲	5	28854	(000000–)	Shaft, Output, Motor, Hyd [En]	1
▲	6	74100	(000000–)	Housing, Motor, Hyd [En]	1
▲	7	21955	(000000–)	Drive [Cl]	1
▲	8	74094	(000000–)	Plate, Spacer, Motor, Hyd [En]	1
▲	9	21956	(000000–)	Gerotor Set [Cl]	1
▲	10	65230	(000000–)	End Cap, Motor, Hyd [En]	1
▲	11	21958	(000000–)	Cap Screw Cl	5
▲	12	00500–15	(000000–)	Key, Woodruff, 0.25 1.00 [Asa#0808]	1
▲	13	61490	(000000–)	Seal Kit, Motor [Cl]	1
▲	14	74250	(000000–)	Instr, Motor, Hyd, Repair [En]	1

Fig. 6 – Hydraulic Motor Breakdown, 53485

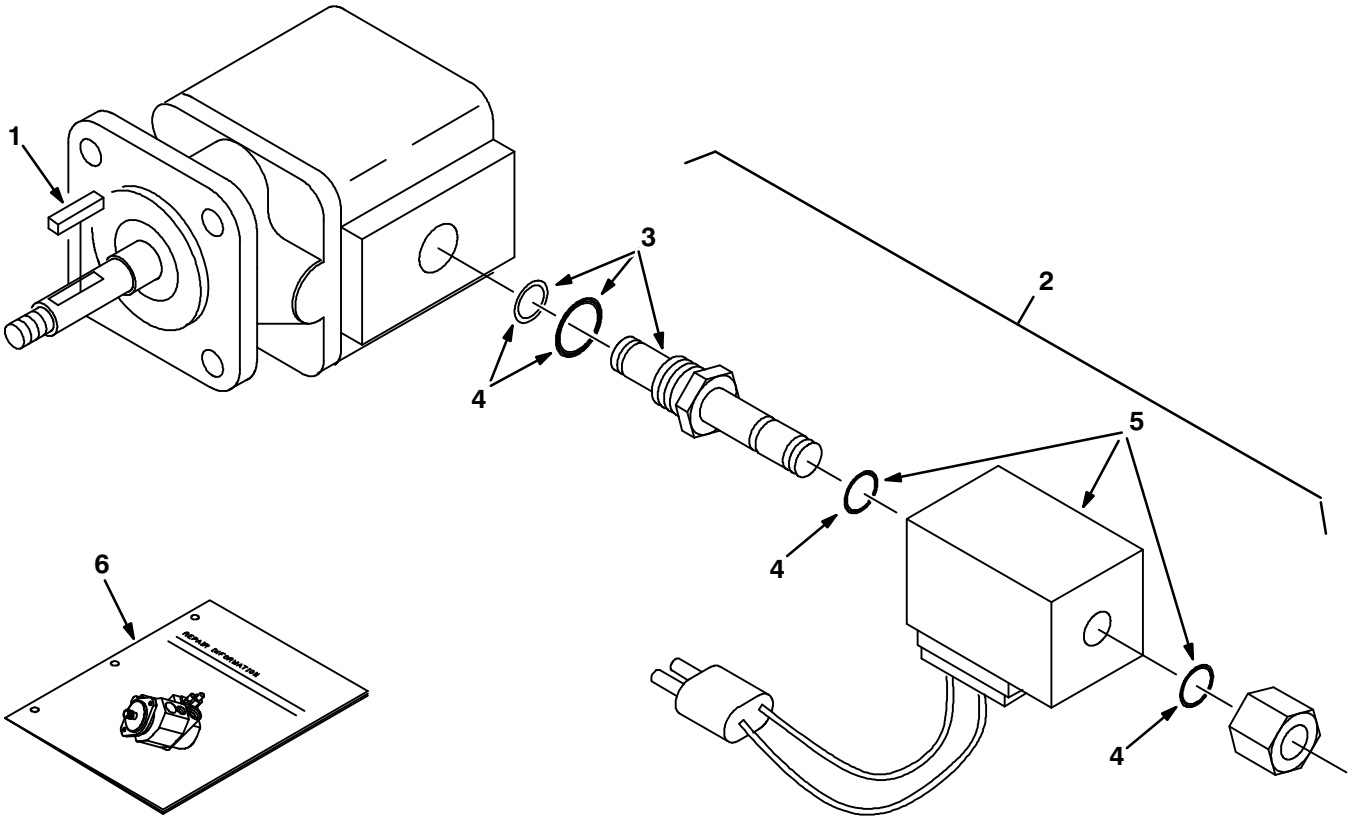

07490 – 09670

	Ref.	Part No.	Serial Number	Description	Qty.
▽		53485	(000000–)	Motor, Hyd, Gear, Ext 0.19 Rh 3000	1
▲		74233	(000000–)	Kit, Seal, Motor, Hyd, Gear[Barns]	1
▲	1	00966	(000000–)	Key, Sq, 0.12 X 0.12, 0.75l	1
▲▽	2	54095	(000000–)	Valve, Hyd Cartridge 10no/–0	1
▲▲	3	59378	(000000–)	Valve Stem, N.O.Valve, Hyd	1
▲▲	4	48813	(000000–)	Kit, Seal, Valve, Hyd [Cec]	1
▲▲	5	35493	(000000–)	Solenoid, 12v, Valve, Hyd [Cec]	1
	6	IB3614	(000000–)	Instr, Seal Kit, Motor	1

Fig. 7 – Hydraulic Valve Breakdown, 1018936

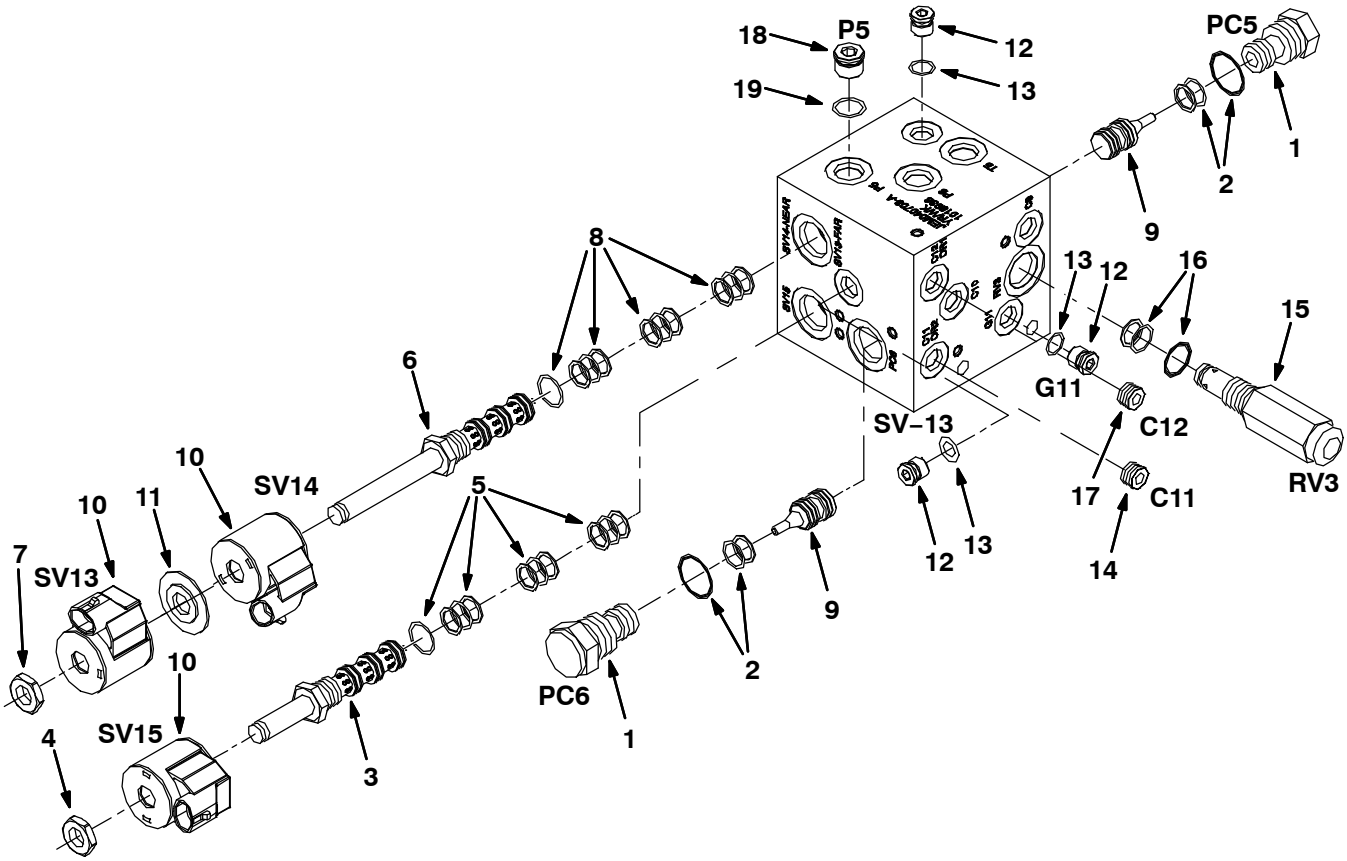

ALL

	Ref.	Part No.	Serial Number	Description	Qty.
▽		1018936	(000000–)	Valve, Cntrl, Hyd [M20]	1
▲▽	1	373656	(000000–)	Valve, Check	2
▲▲	2	373647	(000000–)	Seal Kit, Cartridge	1
▲▽	3	373657	(000000–)	Stem, Valve, Hyd, 4w2p	1
▲▲	4	373648	(000000–)	Nut, Coil, F/#8	1
▲▲	5	373647	(000000–)	Seal Kit, Cartridge	1
▲▽	6	373637	(000000–)	Valve, Cntrl, Solenoid	1
▲▲	7	373648	(000000–)	Nut, Coil, F/#8	1
▲▲	8	373647	(000000–)	Seal Kit, Cartridge	1
▲	9	373658	(000000–)	Spool, Pilot, Hyd	2
▲	10	373640	(000000–)	Solenoid, #8, 12vdc	3
▲	11	373639	(000000–)	Spacer, Coil, #8	1
▲▽	12	74098	(000000–)	Fitting, Hyd, Plug, Om04	3
▲▲	13	77003	(000000–)	Seal, Org, .072 X 00.35id #04	1
▲	14	373633	(000000–)	Vr, Plug, Orifice, Valve, Hyd, .040	1
▲▽	15	373659	(000000–)	Valve, Hyd, Relief	1
▲▲	16	373647	(000000–)	Seal Kit, Cartridge	1
▲	17	373660	(000000–)	Plug, Orifice, Valve, Hyd, .030	1
▲▽	18	13904	(000000–)	Fitting, Plug, Org, #6, Valve [Cec]	1
▲▲	19	77005	(000000–)	Seal, Org, .078 X 00.47id #06	1

Fig. 8 – Hydraulic Valve Breakdown, 1018938

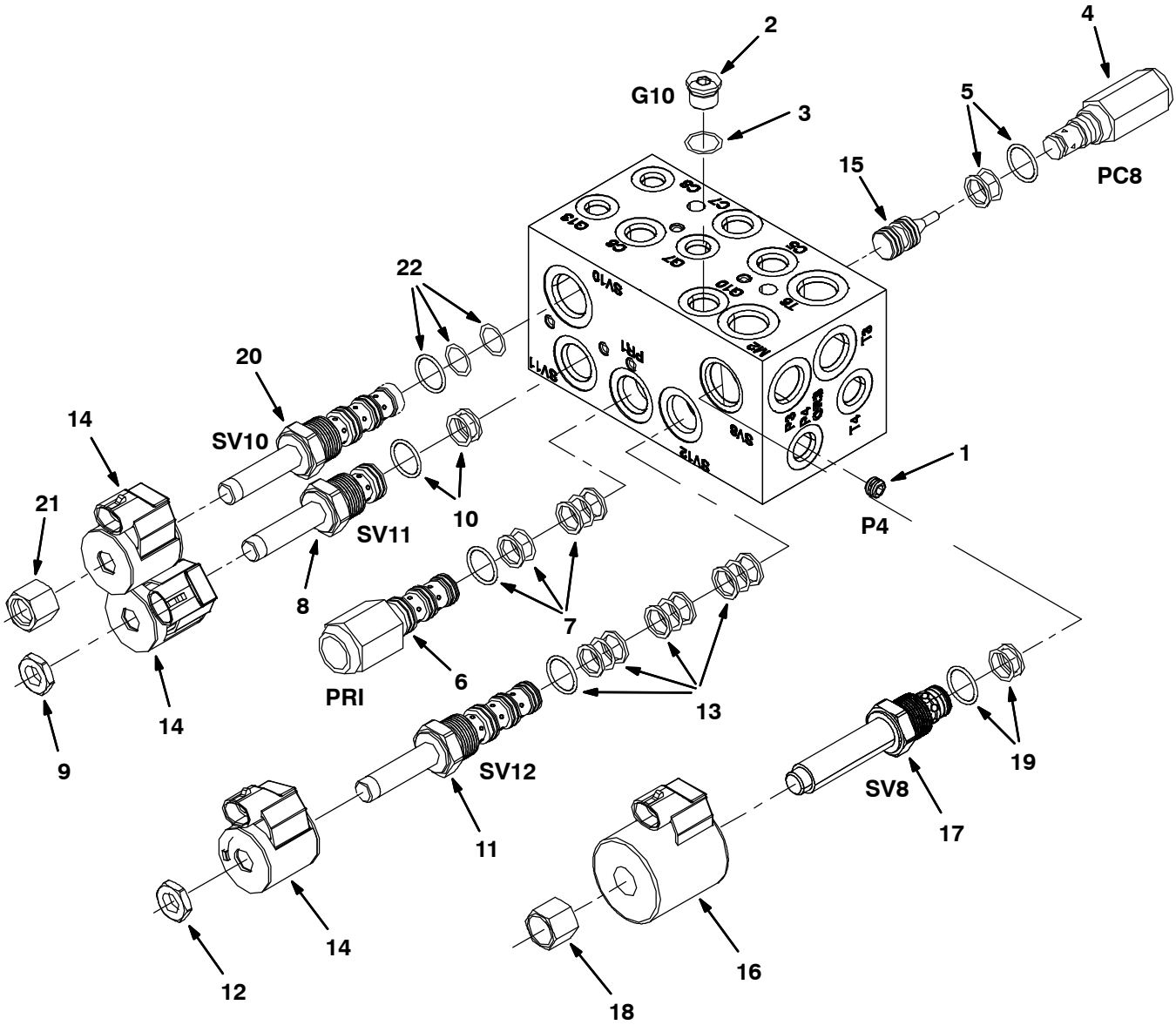

ALL

Fig. 8 – Hydraulic Valve Breakdown, 1018938

	Ref.	Part No.	Serial Number	Description	Qty.
▽		1018938	(000000–)	Valve, Cntrl, Hyd [M20 And T20] (Replaced by 1037805)	1
▲	1	373633	(000000–)	Plug, Orifice, Valve, Hyd, .040	1
▲▽	2	13904	(000000–)	Fitting, Plug, Org, #6, Valve [Cec]	1
▲▲	3	77005	(000000–)	Seal, Org, .078 X 00.47id #06	1
▲▽	4	373656	(000000–)	Valve, Check	1
▲▲	5	373647	(000000–)	Seal Kit, Cartridge	1
▲▽	6	373661	(000000–)	Valve, Relief	1
▲▲	7	373647	(000000–)	Seal Kit, Cartridge	1
▲▽	8	373662	(000000–)	Stem, Valve, Hyd	1
▲▲	9	373648	(000000–)	Nut, Coil, F/#8	1
▲▲	10	373647	(000000–)	Seal Kit, Cartridge	1
▲▽	11	373657	(000000–)	Stem, Valve, Hyd, 4w2p	1
▲▲	12	373648	(000000–)	Nut, Coil, F/#8	1
▲▲	13	373647	(000000–)	Seal Kit, Cartridge	1
▲	14	373640	(000000–)	Solenoid, #8, 12vdc	3
▲	15	373658	(000000–)	Spool, Pilot, Hyd	1
▲	16	373642	(000000–)	Solenoid, #10, 12vdc	1
▲▽	17	373663	(000000–)	Valve, Stem, No	1
▲▲	18	373670	(000000–)	Nut, Solenoid	1
▲▲	19	373646	(000000–)	Seal Kit, Cartridge	1
▲▽	20	373664	(000000–)	Cartridge, Psi Cntrl, Valve, Hyd	1
▲▲	21	373673	(000000–)	Nut, Solenoid	1
▲▲	22	373672	(000000–)	Seal Kit, Cartridge	1

Fig. 9 – Hydraulic Valve Breakdown, 1037805

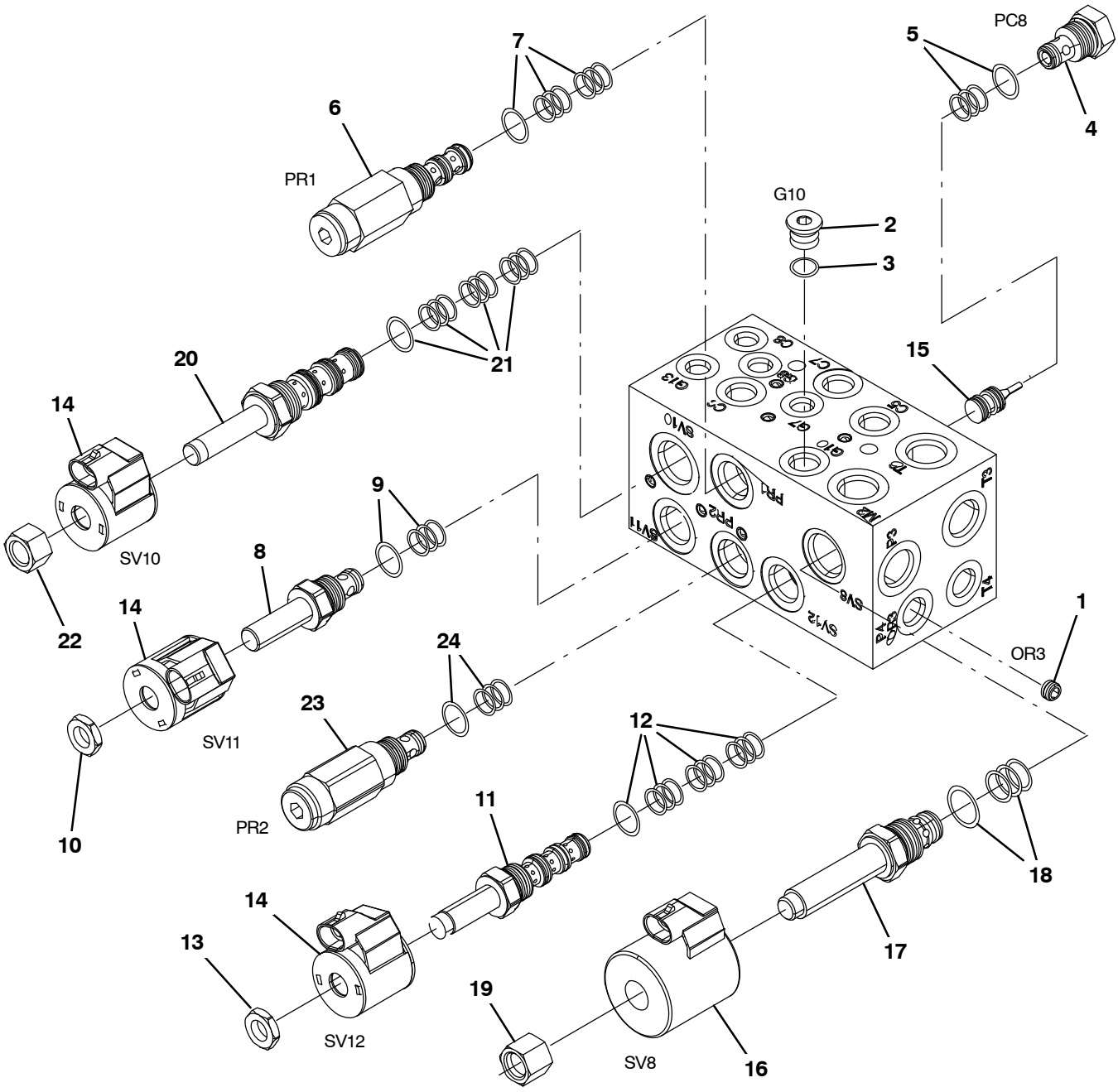

ALL

Fig. 9 – Hydraulic Valve Breakdown, 1037805

	Ref.	Part No.	Serial Number	Description	Qty.
▽		1037805	(000000–)	Valve, Cntrl, Hyd, Solenoid, 03/16gpm	1
▲	1	373633	(000000–)	Plug, Orifice, Valve, Hyd, .040	1
▲▽	2	13904	(000000–)	Fitting, Plug, Org, #6, Valve [Cec]	1
▲▲	3	77005	(000000–)	Seal, Org, .078 X 00.47id 06	1
▲▽	4	373656	(000000–)	Valve, Check	1
▲▲	5	373647	(000000–)	Seal Kit, Cartridge	1
▲▽	6	373661	(000000–)	Valve, Relief	1
▲▲	7	373647	(000000–)	Seal Kit, Cartridge	1
▲▽	8	373662	(000000–)	Stem, Valve, Hyd	1
▲▲	9	373647	(000000–)	Seal Kit, Cartridge	1
▲▲	10	373648	(000000–)	Nut, Coil, Nyl Patch	1
▲▽	11	373657	(000000–)	Stem, Valve, Hyd [4w2p]	1
▲▲	12	373647	(000000–)	Seal Kit, Cartridge	1
▲▲	13	373648	(000000–)	Nut, Coil, F/#8	1
▲	14	373640	(000000–)	Solenoid, #8, 12vdc	3
▲	15	373658	(000000–)	Spool, Pilot, Hyd	1
▲	16	373642	(000000–)	Solenoid, #10, 12vdc	1
▲▽	17	373663	(000000–)	Valve, Stem, No	1
▲▲	18	373646	(000000–)	Seal Kit, Cartridge	1
▲▲	19	373670	(000000–)	Nut, Solenoid	1
▲▽	20	373664	(000000–)	Cartridge, Psi Cntrl, Valve, Hyd	1
▲▲	21	373672	(000000–)	Seal Kit, Cartridge	1
▲▲	22	373673	(000000–)	Nut, Solenoid	1
▲▽	23	373683	(000000–)	Valve, Relief	1
▲▲	24	373647	(000000–)	Seal Kit, Cartridge	1

Fig. 10 – Hydraulic Valve Breakdown, 1072997

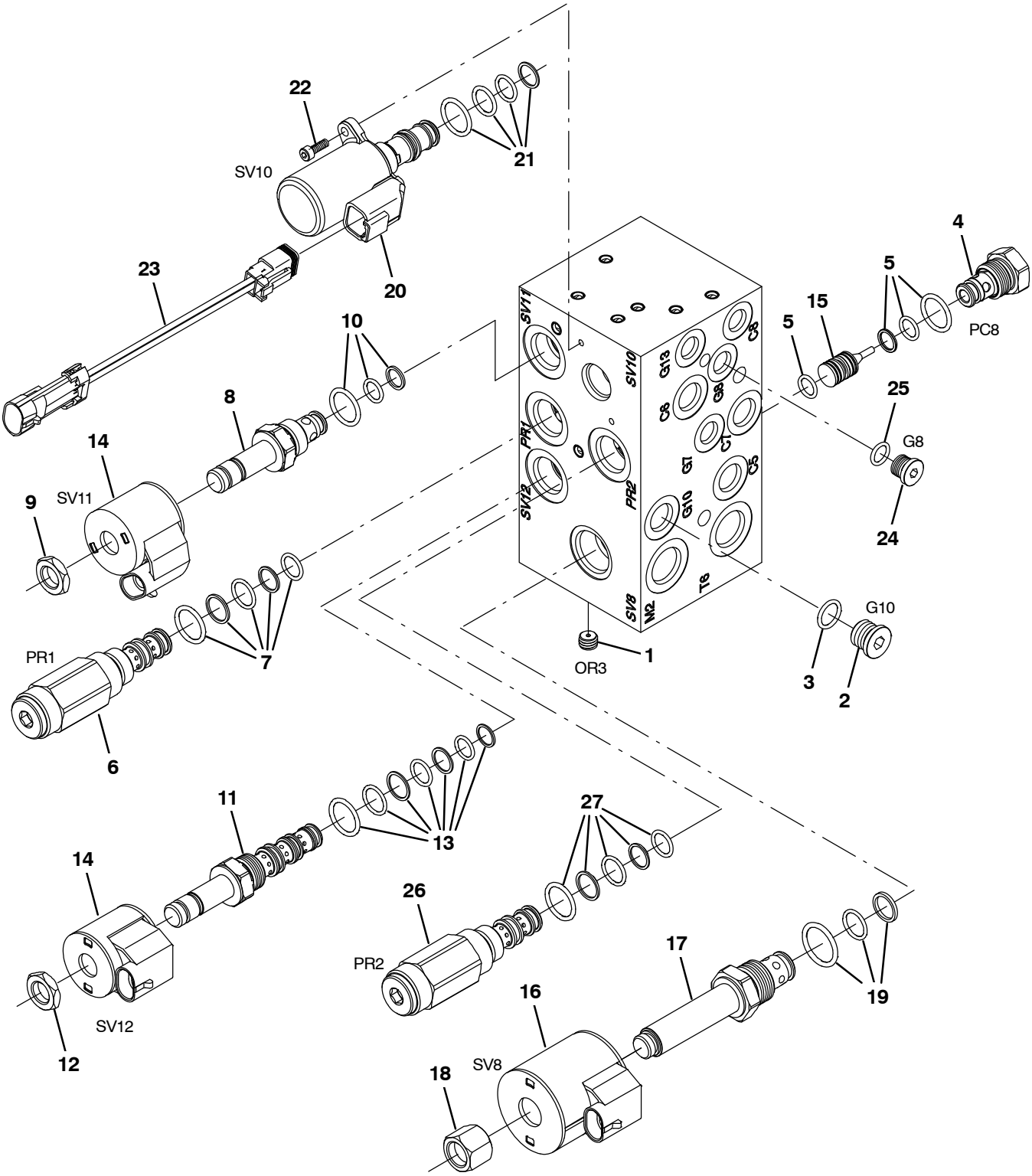

356403 – ALL

Fig. 10 – Hydraulic Valve Breakdown, 1072997

	Ref.	Part No.	Serial Number	Description	Qty.
▽		1072997	(000000–)	Valve, Cntrl, Hyd, Solenoid, 03/16gpm	1
▲	1	373633	(000000–)	Plug, Orifice, Valve, Hyd, .040	1
▲▽	2	13904	(000000–)	Fitting, Plug, Org, #6, Valve [Cec]	1
▲▲	3	77005	(000000–)	Seal, Org, .078 X 00.47id 06	1
▲▽	4	373656	(000000–)	Valve, Check	1
▲▲	5	373647	(000000–)	Seal Kit, Cartridge	1
▲▽	6	373661	(000000–)	Valve, Relief	1
▲▲	7	373647	(000000–)	Seal Kit, Cartridge	1
▲▽	8	373662	(000000–)	Stem, Valve, Hyd	1
▲▲	9	373648	(000000–)	Nut, Coil, Nyl Patch	1
▲▲	10	373647	(000000–)	Seal Kit, Cartridge	1
▲▽	11	373657	(000000–)	Stem, Valve, Hyd [4w2p]	1
▲▲	12	373648	(000000–)	Nut, Coil, F/#8	1
▲▲	13	373647	(000000–)	Seal Kit, Cartridge	1
▲	14	373640	(000000–)	Solenoid, #8, 12vdc	3
▲	15	373658	(000000–)	Spool, Pilot, Hyd	1
▲	16	373642	(000000–)	Solenoid, #10, 12vdc	1
▲▽	17	373663	(000000–)	Valve, Stem, No	1
▲▲	18	373670	(000000–)	Nut, Solenoid	1
▲▲	19	373646	(000000–)	Seal Kit, Cartridge	1
▲▽	20	9011347	(000000–)	Valve Assy [Proportional]	1
▲▲	21	9011343	(000000–)	Seal Kit, Valve [Ehpr98]	1
▲▲	22	9011345	(000000–)	Screw, Mtg [Ehpr98]	2
▲▲	23	9011346	(000000–)	Harness, Jumper [Deutsch To Mpack]	1
▲▽	24	13904	(000000–)	Fitting, Plug, Org, #6, Valve [Cec]	1
▲▲	25	77005	(000000–)	Seal, Org, .078 X 00.47id 06	1
▲▽	26	373683	(000000–)	Valve, Relief	1
▲▲	27	373647	(000000–)	Seal Kit, Cartridge	1

Fig. 11 – Hydraulic Valve Breakdown, 1020394

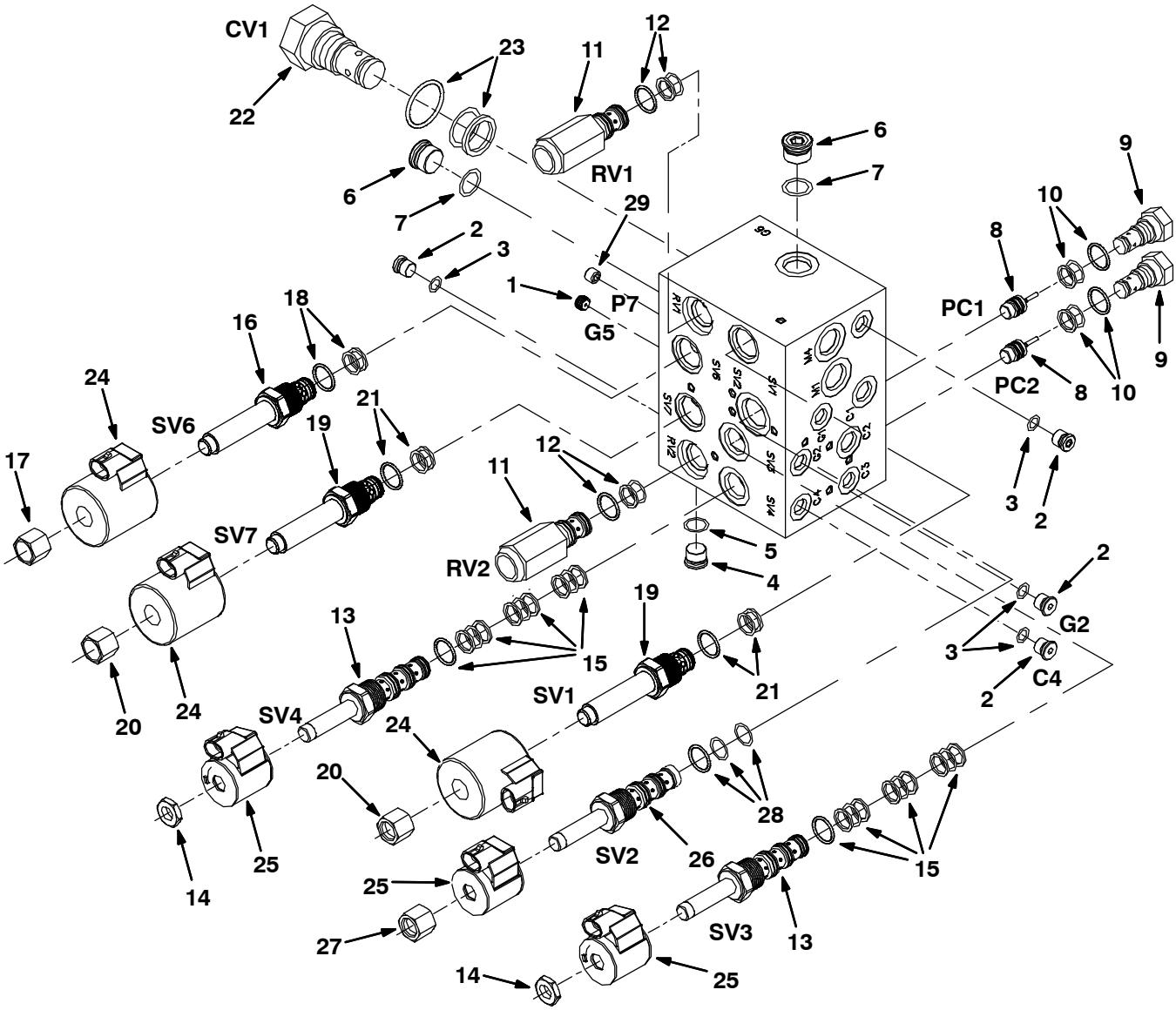

ALL

Fig. 11 – Hydraulic Valve Breakdown, 1020394

	Ref.	Part No.	Serial Number	Description	Qty.
▽		1020394	(000000–)	Valve, Cntrl, Hyd	1
▲	1	373665	(000000–)	Plug, Orifice, Valve, Hyd, .046	1
▲▽	2	74098	(000000–)	Fitting, Hyd, Plug, Om04	4
▲▲	3	77003	(000000–)	Seal, Org, .072 X 00.35id #04	1
▲▽	4	13904	(000000–)	Fitting, Plug, Org, #6, Valve [Cec]	1
▲▲	5	77005	(000000–)	Seal, Org, .078 X 00.47id #06	1
▲▽	6	13907	(000000–)	Fitting, Hyd, Plug, Om08	2
▲▲	7	77006	(000000–)	Seal, Org, .087 X 00.64id #08	2
▲	8	373658	(000000–)	Spool, Pilot, Hyd	2
▲▽	9	373631	(000000–)	Valve, Check	2
▲▲	10	373647	(000000–)	Seal Kit, Cartridge	1
▲▽	11	373666	(000000–)	Valve, Relief	2
▲▲	12	373647	(000000–)	Seal Kit, Cartridge	1
▲▽	13	373657	(000000–)	Stem, Valve, Hyd, 4w2p	2
▲▲	14	373648	(000000–)	Nut, Coil, F/#8	1
▲▲	15	373647	(000000–)	Seal Kit, Cartridge	1
▲▽	16	373667	(000000–)	Stem, Valve, Hyd	1
▲▲	17	373648	(000000–)	Nut, Coil, F/#8	1
▲▲	18	373646	(000000–)	Seal Kit, Cartridge	1
▲▽	19	373663	(000000–)	Valve, Stem, No	2
▲▲	20	373670	(000000–)	Nut, Solenoid	1
▲▲	21	373646	(000000–)	Seal Kit, Cartridge	1
▲▽	22	373668	(000000–)	Valve, Check	1
▲▲	23	373671	(000000–)	Seal Kit, Cartridge	1
▲	24	373642	(000000–)	Solenoid, #10, 12vdc	3
▲	25	373640	(000000–)	Solenoid, #8, 12vdc	3
▲▽	26	373664	(000000–)	Cartridge, Psi Cntrl, Valve, Hyd	1
▲▲	27	373673	(000000–)	Nut, Solenoid	1
▲▲	28	373672	(000000–)	Seal Kit, Cartridge	1
▲	29	373669	(000000–)	Plug, Orifice, Valve, Hyd, .063	1

Fig. 12 – Hydraulic Valve Breakdown, 1038566

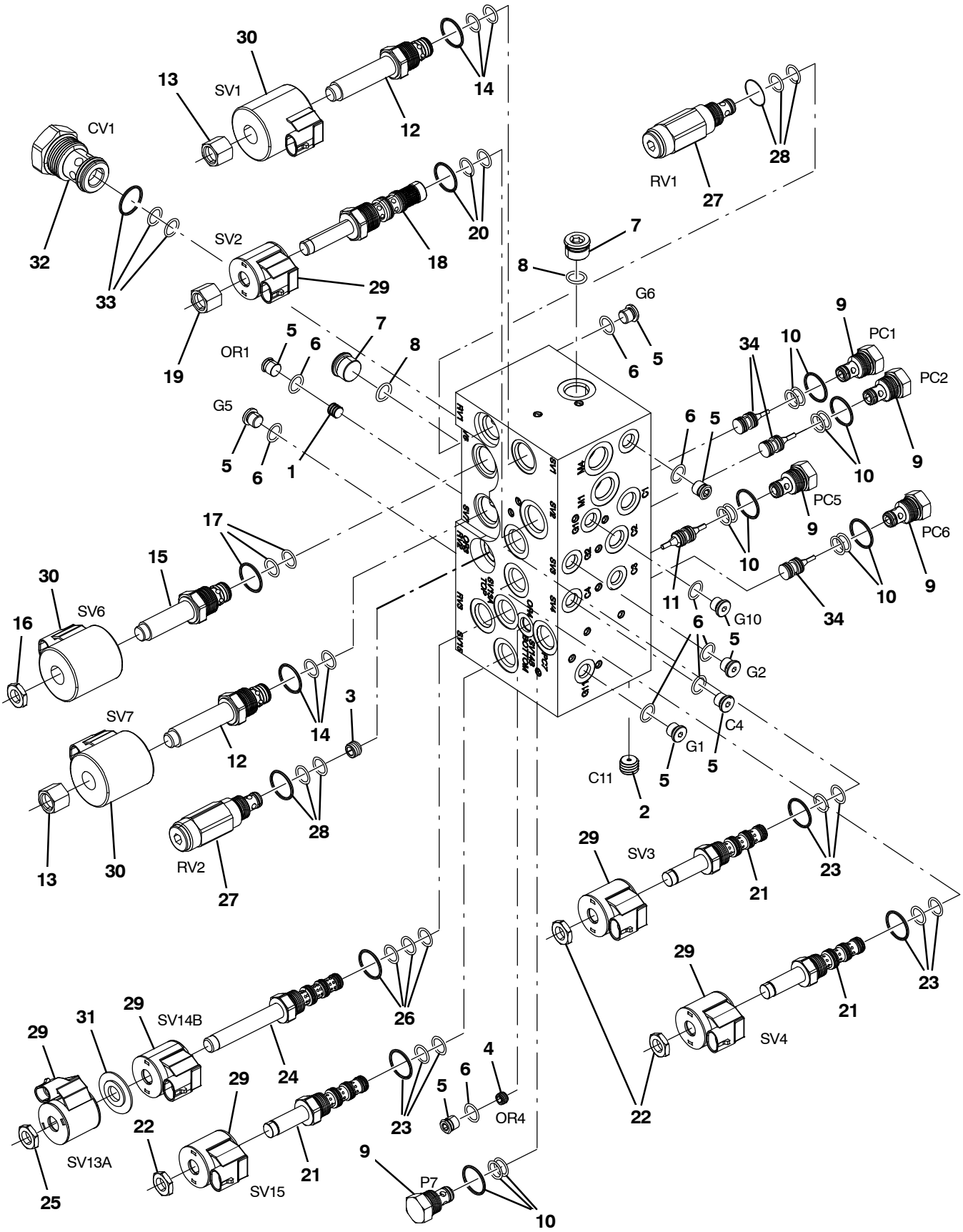

354643 – M20

Fig. 12 – Hydraulic Valve Breakdown, 1038566

	Ref.	Part No.	Serial Number	Description	Qty.
▽		1038566	(000000–)	Valve, Hyd, Solenoid, 12vdc	1
▲	1	373665	(000000–)	Plug, Orifice, Valve, Hyd, .046	1
▲	2	373633	(000000–)	Plug, Orifice, Valve, Hyd, .040	1
▲	3	9004475	(000000–)	Plug Orifice, Valve, Hyd, .140	1
▲	4	373660	(000000–)	Plug, Orifice, Valve, Hyd, .030	1
▲▽	5	74098	(000000–)	Fitting, Hyd, Plug, Om04	9
▲▲	6	77003	(000000–)	Seal, Org, .072 X 00.35id #04	1
▲▽	7	13904	(000000–)	Fitting, Plug, Org, #6, Valve [Cec]	2
▲▲	8	77005	(000000–)	Seal, Org, .078 X 00.47id #06	1
▲▽	9	373656	(000000–)	Valve, Check	5
▲▲	10	373647	(000000–)	Seal Kit, Cartridge	1
▲	11	373688	(000000–)	Spool, Pilot, Dual, Hyd	1
▲▽	12	373663	(000000–)	Valve, Stem, No	2
▲▲	13	373670	(000000–)	Nut, Solenoid	1
▲▲	14	373671	(000000–)	Seal Kit, Cartridge	1
▲▽	15	373667	(000000–)	Stem, Valve, Hyd	1
▲▲	16	373648	(000000–)	Nut, Coil, F/#8	1
▲▲	17	373671	(000000–)	Seal Kit, Cartridge	1
▲▽	18	373664	(000000–)	Cartridge, Psi Cntrl, Valve, Hyd	1
▲▲	19	373673	(000000–)	Nut, Solenoid	1
▲▲	20	373672	(000000–)	Seal Kit, Cartridge	1
▲▽	21	373657	(000000–)	Stem, Valve, Hyd [4w2p]	3
▲▲	22	373648	(000000–)	Nut, Coil, F/#8	1
▲▲	23	373647	(000000–)	Seal Kit, Cartridge	1
▲▽	24	373637	(000000–)	Valve, Cntrl, Solenoid	1
▲▲	25	373684	(000000–)	Nut, Coil, Nyl Patch	2
▲▲	26	373671	(000000–)	Seal Kit, Cartridge	1
▲▽	27	373666	(000000–)	Valve, Relief	2
▲▲	28	373647	(000000–)	Seal Kit, Cartridge	1
▲	29	373640	(000000–)	Solenoid, #8, 12vdc	6
▲	30	373642	(000000–)	Solenoid, #10, 12vdc	3
▲	31	373639	(000000–)	Spacer, Coil, #8	1
▲▽	32	373668	(000000–)	Valve, Check	1
▲▲	33	373671	(000000–)	Seal Kit, Cartridge	1
▲	34	373658	(000000–)	Spool, Pilot, Hyd	3

Fig. 13 – Hydraulic Valve Breakdown, 1072995

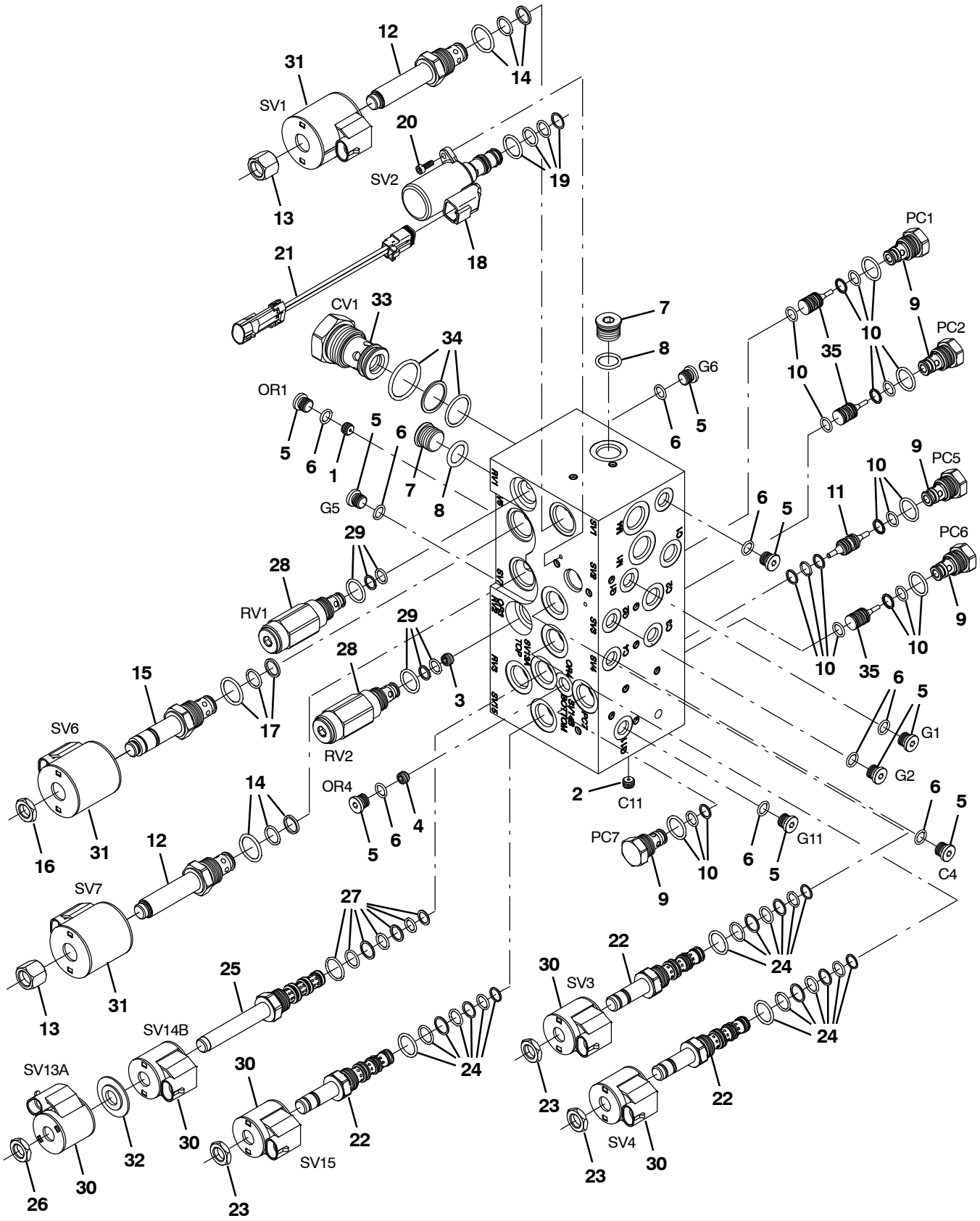

356401 – M20

Fig. 13 – Hydraulic Valve Breakdown, 1072995

	Ref.	Part No.	Serial Number	Description	Qty.
▽		1072995	(000000–)	Valve, Cntrl, Hyd, Solenoid, 12vdc 10gpm	1
▲	1	373665	(000000–)	Plug, Orifice, Valve, Hyd, .046	1
▲	2	373633	(000000–)	Plug, Orifice, Valve, Hyd, .040	1
▲	3	9004475	(000000–)	Plug Orifice, Valve, Hyd, .140	1
▲	4	373660	(000000–)	Plug, Orifice, Valve, Hyd, .030	1
▲▽	5	74098	(000000–)	Fitting, Hyd, Plug, Om04	9
▲▲	6	77003	(000000–)	Seal, Org, .072 X 00.35id #04	1
▲▽	7	13904	(000000–)	Fitting, Plug, Org, #6, Valve [Cec]	2
▲▲	8	77005	(000000–)	Seal, Org, .078 X 00.47id #06	1
▲▽	9	373656	(000000–)	Valve, Check	5
▲▲	10	373647	(000000–)	Seal Kit, Cartridge	1
▲	11	373688	(000000–)	Spool, Pilot, Dual, Hyd	1
▲▽	12	373663	(000000–)	Valve, Stem, No	2
▲▲	13	373670	(000000–)	Nut, Solenoid	1
▲▲	14	373671	(000000–)	Seal Kit, Cartridge	1
▲▽	15	373667	(000000–)	Stem, Valve, Hyd	1
▲▲	16	373648	(000000–)	Nut, Coil, F/#8	1
▲▲	17	373671	(000000–)	Seal Kit, Cartridge	1
▲▽	18	9011347	(000000–)	Valve Assy [Proportional]	1
▲▲	19	9011343	(000000–)	Seal Kit, Valve [Ehpr98]	1
▲▲	20	9011345	(000000–)	Screw, Mtg [Ehpr98]	2
▲▲	21	9011346	(000000–)	Harness, Jumper [Deutsch To Mpack]	1
▲▽	22	373657	(000000–)	Stem, Valve, Hyd [4w2p]	3
▲▲	23	373648	(000000–)	Nut, Coil, F/#8	1
▲▲	24	373647	(000000–)	Seal Kit, Cartridge	1
▲▽	25	373637	(000000–)	Valve, Cntrl, Solenoid	1
▲▲	26	373684	(000000–)	Nut, Coil, Nyl Patch	2
▲▲	27	373671	(000000–)	Seal Kit, Cartridge	1
▲▽	28	373666	(000000–)	Valve, Relief	2
▲▲	29	373647	(000000–)	Seal Kit, Cartridge	1
▲	30	373640	(000000–)	Solenoid, #8, 12vdc	5
▲	31	373642	(000000–)	Solenoid, #10, 12vdc	3
▲	32	373639	(000000–)	Spacer, Coil, #8	1
▲▽	33	373668	(000000–)	Valve, Check	1
▲▲	34	373671	(000000–)	Seal Kit, Cartridge	1
▲	35	373658	(000000–)	Spool, Pilot, Hyd	3

Fig. 14 – Hydraulic Steering Valve Breakdown, 1024260

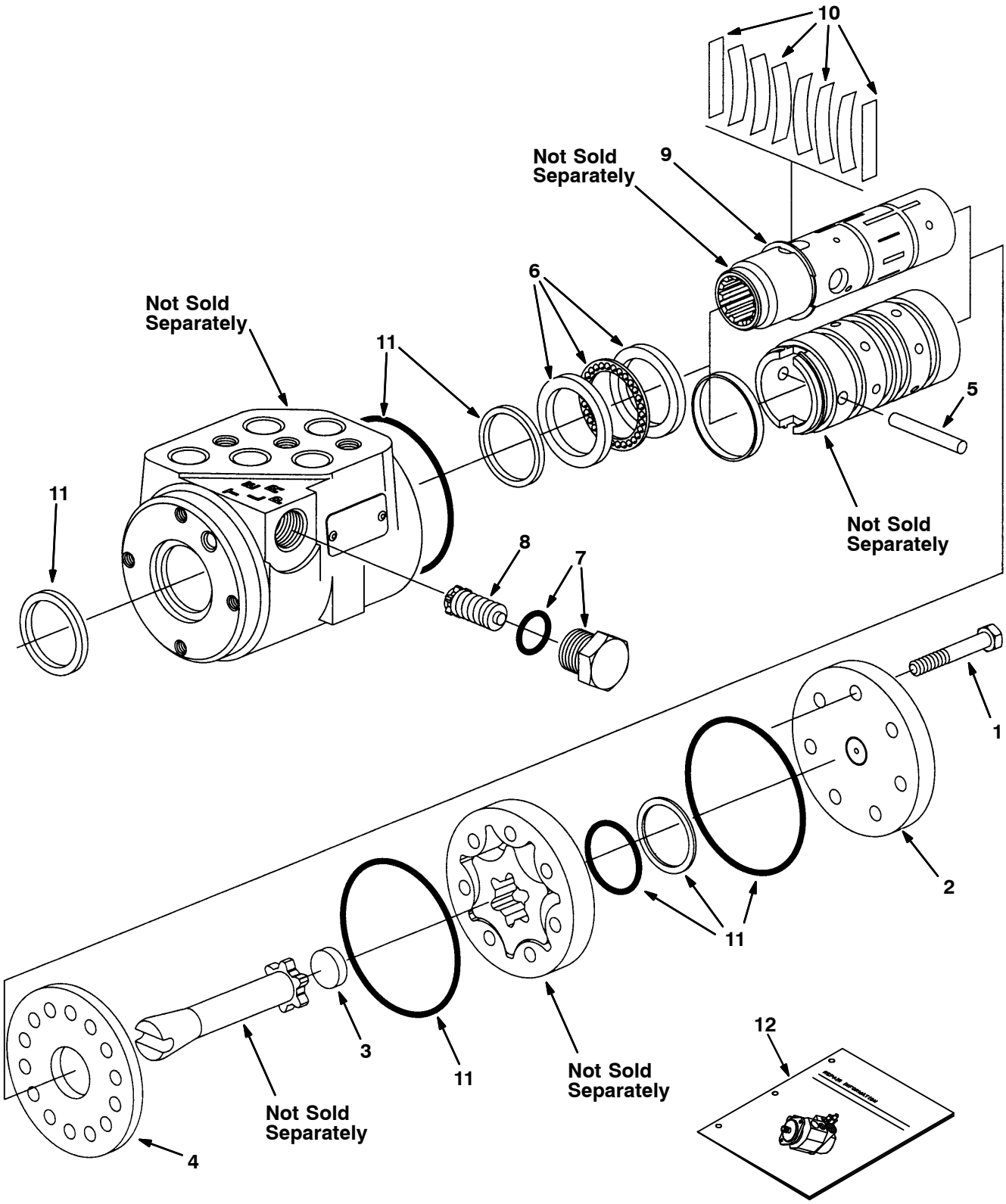

Fig. 14 – Hydraulic Steering Valve Breakdown, 1024260

	Ref.	Part No.	Serial Number	Description	Qty.
▽		1024260	(000000–)	Steer–Control, Hyd05, 06.1 2030	1
▲	1	74183	(000000–)	Screw, Valve, Steering	7
▲	2	74185	(000000–)	Cap, End, Valve, Steering	1
▲	3	74193	(000000–)	Spacer, Valve, Steering	1
▲	4	74222	(000000–)	Plate, Wear, Steering Valve	1
▲	5	74232	(000000–)	Pin, Valve, Steering	1
▲	6	21935	(000000–)	Bearing Kit [Cl]	1
▲	7	21933	(000000–)	Plug Assy [Cl]	1
▲	8	21934	(000000–)	Valve Assy, Relief [Cl]	1
▲	9	74243	(000000–)	Ring, Retainer, Steering Valve	1
▲	10	74196	(000000–)	Spring Kit, Scu [Cl]	1
▲	11	74244	(000000–)	Seal Kit, Steering [Cl]	1
▲	12	74245	(000000–)	Instr, Valve, Steering, Repair	1

Fig. 15 – Metering Solution Pump Breakdown, 73260

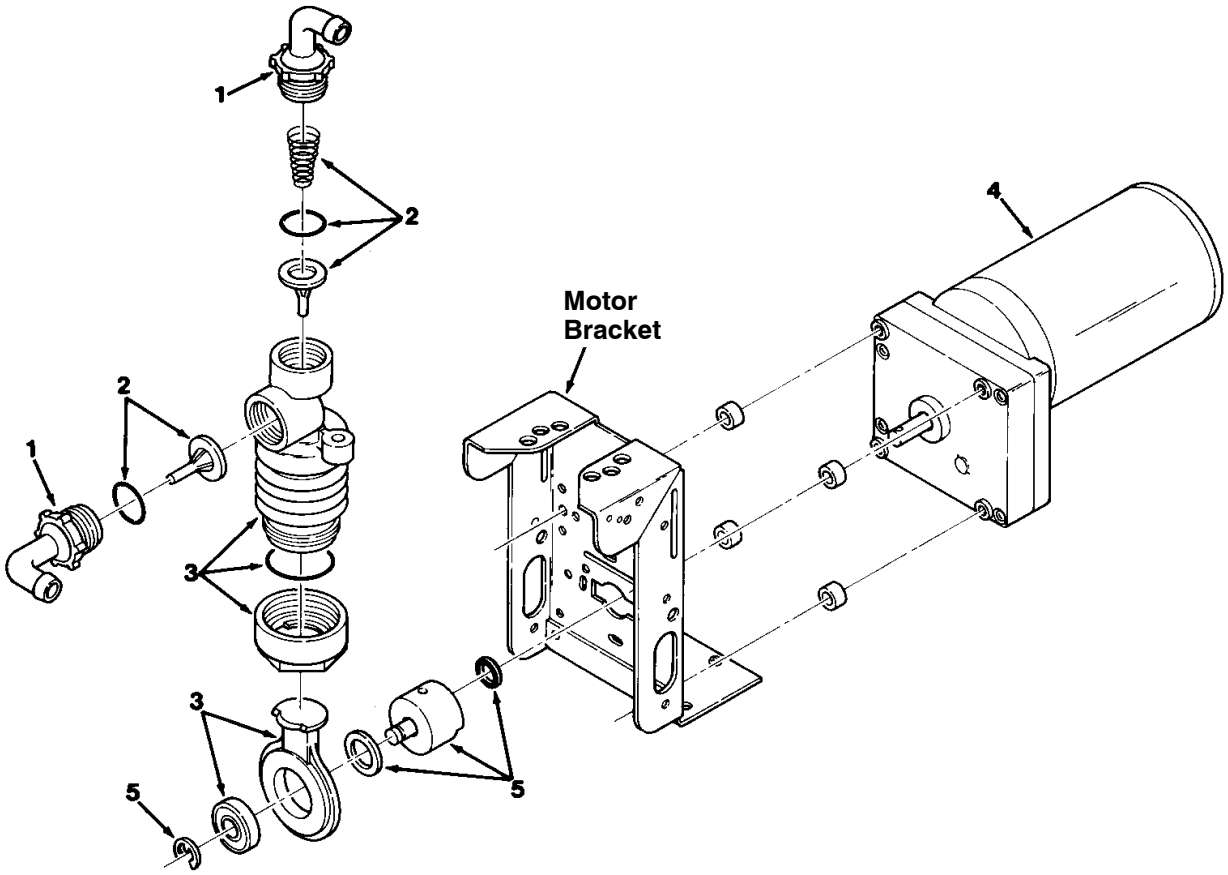

00112 – ALL

	Ref.	Part No.	Serial Number	Description	Qty.
▽		73260	(000000–)	Pump, Detgt, 14vdc, 150ml/Min 20psi	1
▲	1	63923	(000000–)	Tubing Connctr.Kit, Gorman Pmp	1
▲	2	21659	(000000–)	Valve Kit, Poppet, Gorman Rupp	1
▲	3	21657	(000000–)	Kit, Bellows, Pump, Detgt	1
▲	4	78875	(000000–)	Motor, Ele, Gear, 14vdc, Pump, Detgt	1
▲	5	02430	(000000–)	Crank Kit, Pump, F/79323, Replmt	1

Fig. 16 – Water Pump Breakdown, 1026743

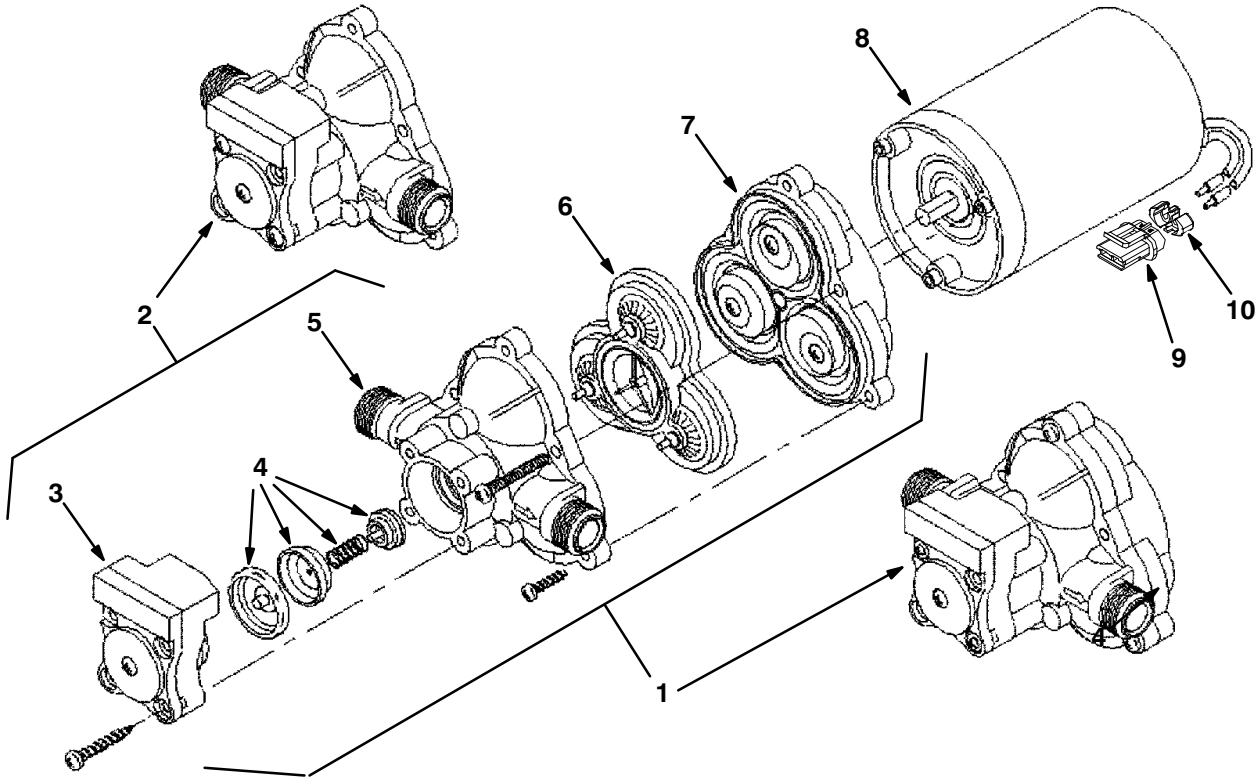

07490 – 09670

	Ref.	Part No.	Serial Number	Description	Qty.
▽		1026743	(000000–)	Pump, Diaphragm	1
▲	1	1031802	(000000–)	Complete Pump Kit, Pump, Repair,	1
▲	2	1031803	(000000–)	Hsg & Switch Kit, Pump, Repair,	1
▲	3	1031796	(000000–)	Switch Kit, Pump, Repair,	1
▲	4	1031797	(000000–)	Chech Valve Kit, Pump, Repair,	1
▲	5	1031798	(000000–)	Upper Hsg Kit, Pump, Repair,	1
▲	6	1031799	(000000–)	Bypass Valve Kit, Pump, Repair,	1
▲	7	1031800	(000000–)	Diaphragm Kit, Pump, Repair,	1
▲	8	1031801	(000000–)	Motor Kit, Pump, Repair,	1
▲	9	78950	(000000–)	Connector, Fem, 02cav, Mp280 Sealed	1
▲	10	78952	(000000–)	Lock, Secondary, 2cav, Mp280 Sealed	1
▲		78951	(000000–)	Terminal, Fem, Mp280, Sealed, 18–16ga	2
▲		10917	(000000–)	Seal, Wire, 14/16ga [Wp / Mp280 Sealed]	2

Fig. 17 – ec–H20 Module Assembly Breakdown, 9007882

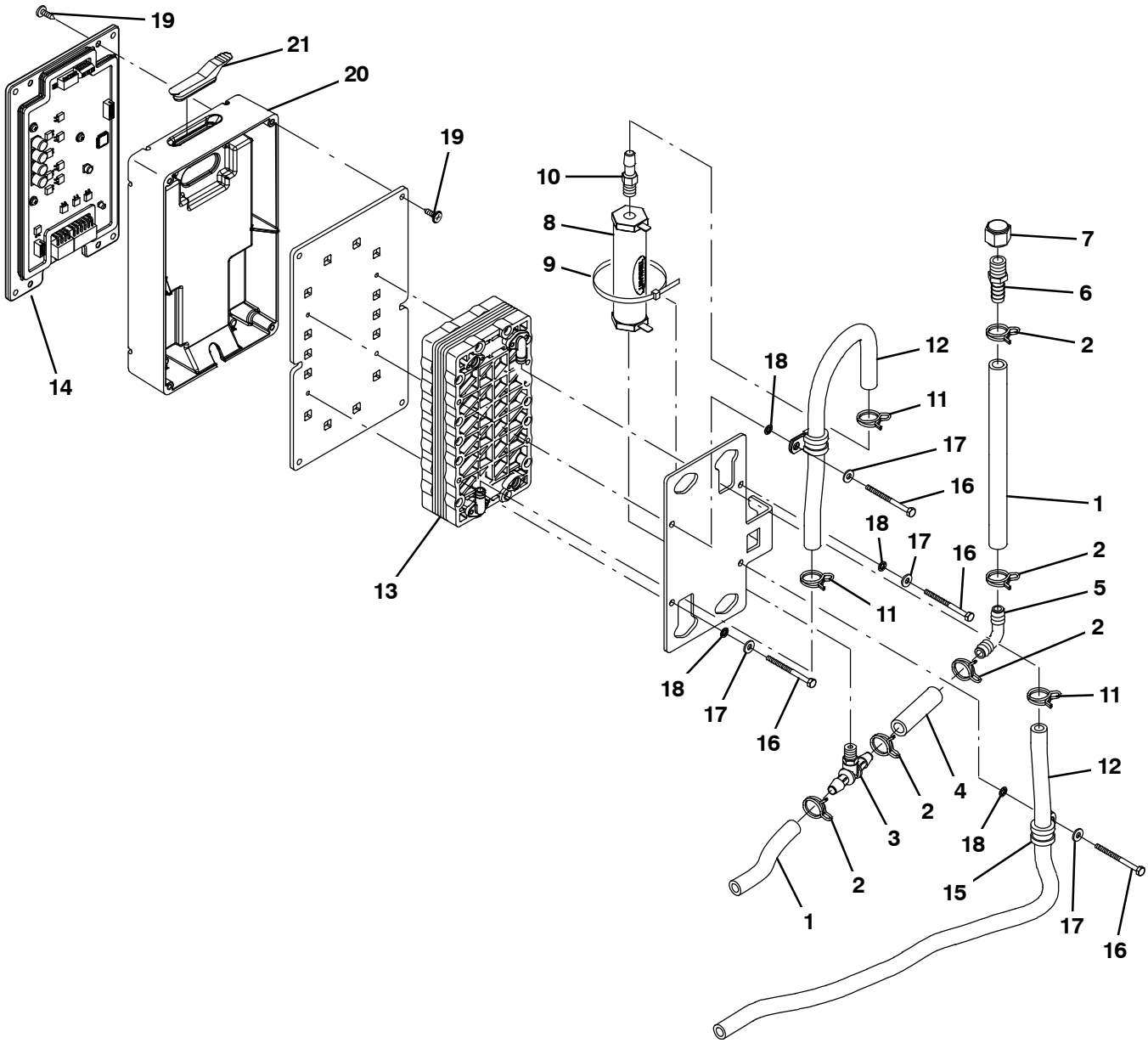

356035

Fig. 17 – ec–H20 Module Assembly Breakdown, 9007882

	Ref.	Part No.	Serial Number	Description	Qty.
▽		9007882	(000000–)	Module Kit, Replmt [Ec–H20]	1
▲	1	1014974	(000000–)	Hose, Afmkt, Pvc, Brd, 0.38id, 02ft, Clr	2
▲	2	607775	(000000–)	Clamp, Hose, Wir, .63 – .66, Blk	5
▲	3	1060517	(000000–)	Fitting, Plstc, Tee, Bm06/Pm02/Bm06	1
▲	4	1014971	(000000–)	Hose, Afmkt, Pvc, Brd, 0.38id, 01ft, Clr	1
▲	5	20951	(000000–)	Fitting, Plstc, E90, Bm06/Bm06	1
▲	6	150540	(000000–)	Fitting, Plstc, Str, Bm06/Pm04	1
▲	7	1005435	(000000–)	Fitting, Plstc, Pipe, Cap, Pf04	1
▲	8	1038159	(000000–)	Electrode, Cylindrical	1
▲	9	44961	(000000–)	Tie, Cable, Nyl, 14.5l .30w 4.0 Max D	1
▲	10	1060695	(000000–)	Fitting, Plstc, Str, Pm02/Bm05	1
▲	11	1053464	(000000–)	Clamp, Hose, Wir, .52 – .56, Yel	3
▲	12	1052336	(000000–)	Hose, Afmkt, PVC, Brd, 0.31Id, 03Ft, Clr	1
▲	13	1057637	(000000–)	Electrode, 5 Plate, High Flow	1
▲	14	9007883	(000000–)	Controller Kit, Replmt [Ec–H20]	1
▲	15	1016354	(000000–)	Clamp, Cable, Ss, 0.50d X 0.50w [Insul]	2
▲	16	32509	(000000–)	Screw, Hex, M4 X 0.70 X 50, Ss	4
▲	17	41579	(000000–)	Washer, Flat, 08, Ss	4
▲	18	02938	(000000–)	Washer, Lock, Int, 08, Ss	4
▲	19	1018155	(000000–)	Screw, Pan, Phl, M5 X 0.80 X 16, Tcut,Ss	8
▲	20	1037032	(000000–)	Housing, Bottom	1
▲	21	1054776	(000000–)	Grommet, Blind	1

Fig. 18 – Seat Breakdown, 1072456

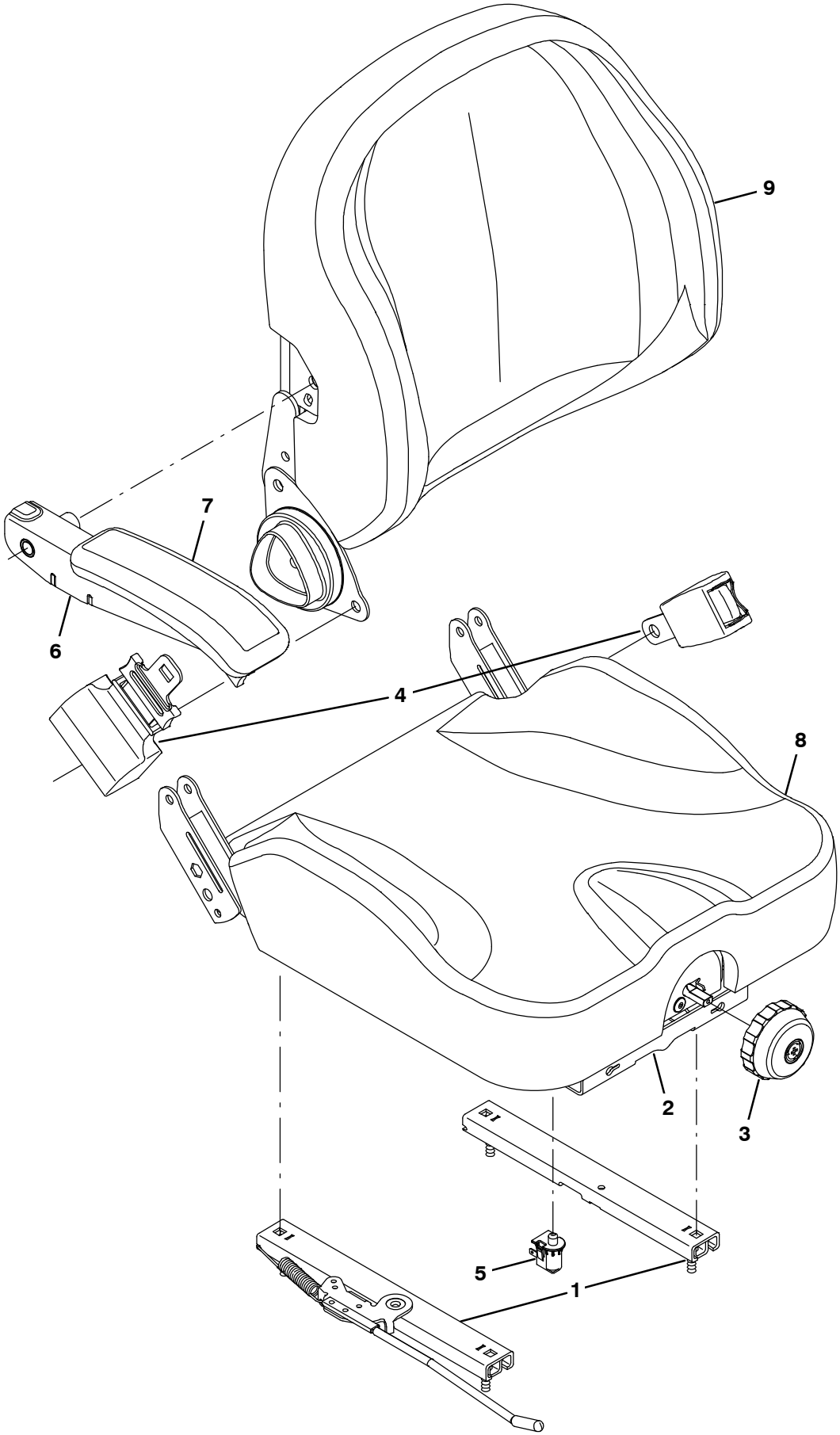

356526

Fig. 18 – Seat Breakdown, 1072456

	Ref.	Part No.	Serial Number	Description	Qty.
▽		1072456	(000000–)	Seat	1
▲	1	9012585	(000000–)	Track Assy, Slide	1
▲	2	9012587	(000000–)	Bellows, Seat	1
▲	3	9012589	(000000–)	Knobs, Adjmt, Weight	1
▲	4	9012590	(000000–)	Seatbelt	1
▲	5	9012591	(000000–)	Switch, Seat	1
▲	6	9012592	(000000–)	Armrest	1
▲	7	9012593	(000000–)	Pad, Armrest	1
▲	8	9012594	(000000–)	Cover, Cushion	1
▲	9	9012595	(000000–)	Cover, Backrest	1

Fig. 19 – FaST Injector Assembly Breakdown, 9008868

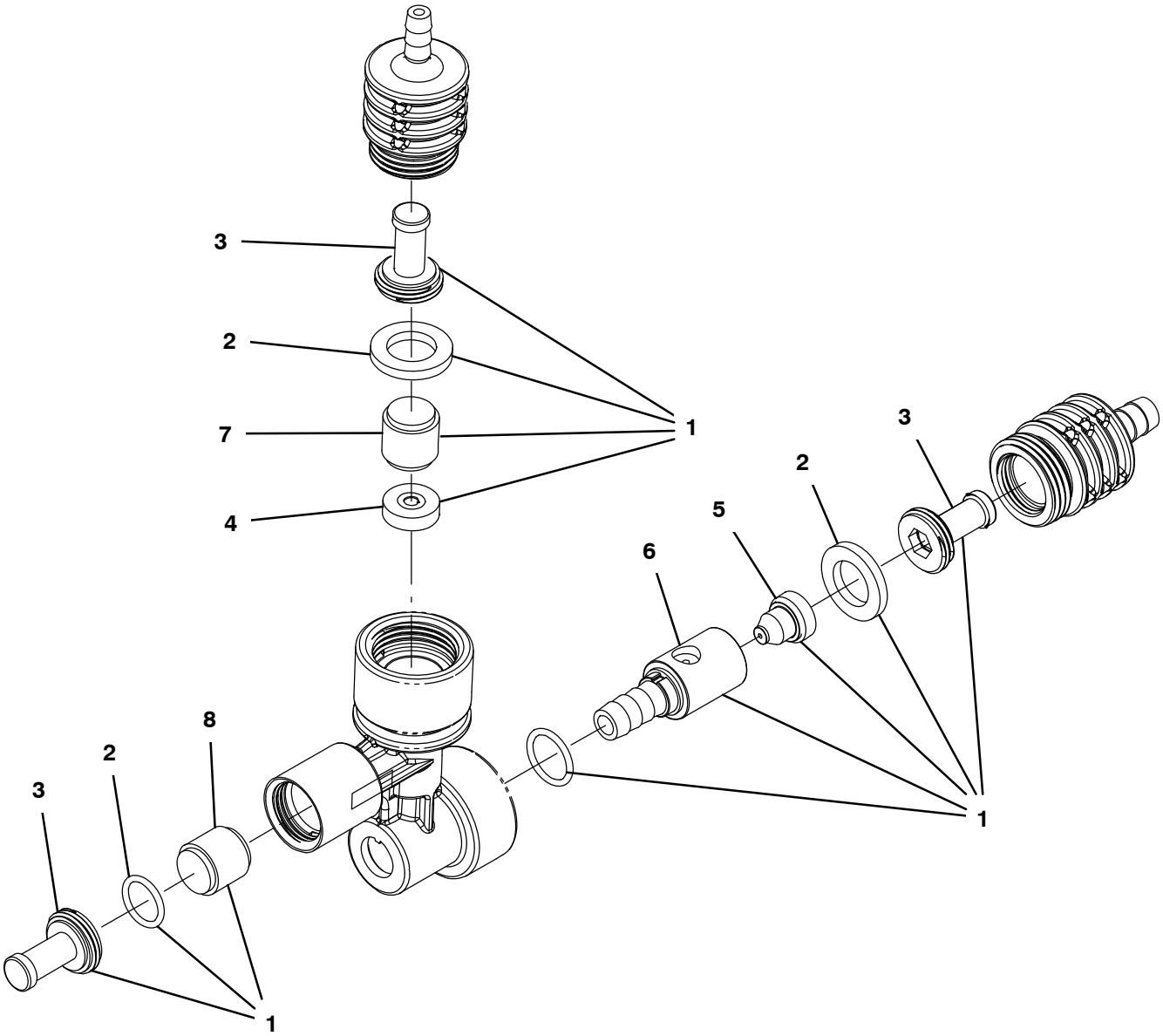

356271

	Ref.	Part No.	Serial Number	Description	Qty.
▽		9008868	(000000–)	FaST Kit, Injector [M20/T20/m30 FaST III}	1
▲▽	1	9008757	(000000–)	FaST Kit, Ci [inj Rebld, M30/M20 III]	1
▲▲	2	9008848	(000000–)	FaST Kit, Seal, injector, Ci [FaST III]	1
▲▲	3	9003009	(000000–)	FaST Kit, Ci, Injector Filters[FaST Ii+]	1
▲▲	4	1059878	(000000–)	Plate Assy, Orifice, 0.0105Id, Green	1
▲▲	5	1042710	(000000–)	Plug, Orifice, 0.060, Ss [FaST Ii+]	1
▲▲	6	1059234	(000000–)	Insert, :Lrg [Venturi, FaST III]	1
▲▲	7	1030444	(000000–)	Valve, Check, 0002psi [FaST Ii+]	1
▲▲	8	1030441	(000000–)	Valve, Check, 0005psi [FaST Ii+]	1

SECTION 5

Contents **Page**

Fig. 1 – Crankcase Group 5-2
Fig. 2 – Oil Pan Group 5-4
Fig. 3 – Cylinder Head Group 5-5
Fig. 4 – Gear Case Group 5-6
Fig. 5 – Water Pump Group 5-8
Fig. 6 – Main Bearing Case Group 5-9
Fig. 7 – Head Cover Group 5-10
Fig. 8 – Manifold Group 5-11
Fig. 9 – Valve, Rocker Arm Group 5-12
Fig. 10 – Fuel Camshaft Group 5-13
Fig. 11 – Camshaft Group 5-14
Fig. 12 – Piston and Crankshaft Group 5-16
Fig. 13 – Flywheel Group 5-18
Fig. 14 – Starter Breakdown, 74405 5-20
Fig. 15 – Nozzle Holder and
Glow Plug Group 5-22
Fig. 16 – Injection Pump Group 5-24
Fig. 17 – Injection Pump Breakdown 5-26
Fig. 18 – Idling Group 5-28
Fig. 19 – Speed Control Plate Group 5-29
Fig. 20 – Governor Group 5-30
Fig. 21 – Water Flange Group 5-31

Fig. 1 – Crankcase Group

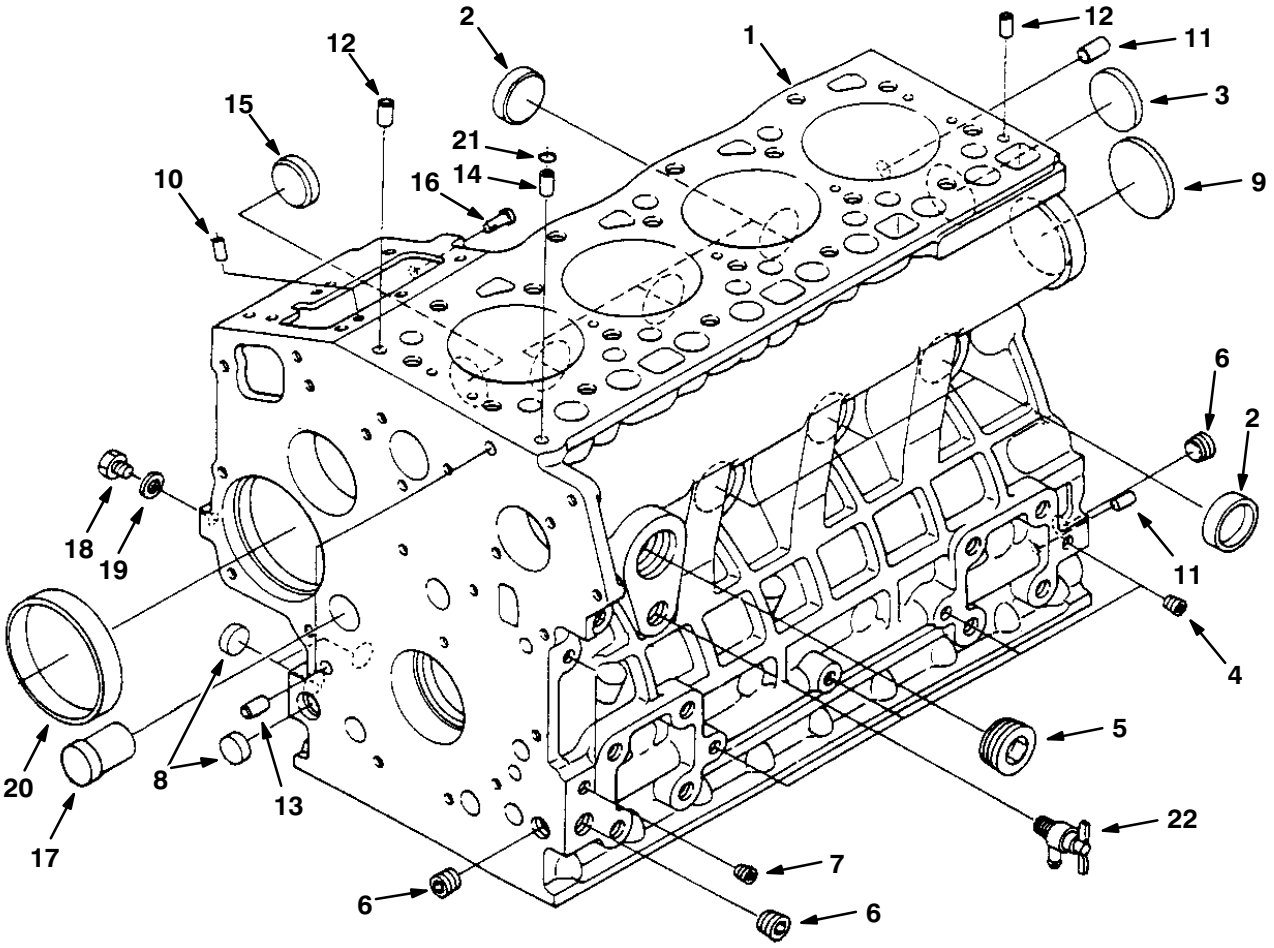

07406 – M20, D

Fig. 1 – Crankcase Group

	Ref.	Part No.	Description	Qty.
▽	1	372920	Crankcase, Complt	1
▲	2	70998	Cap, Sealing	6
▲	3	39087	Cap, Sealing	1
▲	4	39088	Plug	4
▲	5	84647	Plug	1
▲	6	71985	Plug	3
▲	7	39051	Plug	2
▲	8	361436	Plug, Expansion	3
▲	9	71986	Plug, Expansion	1
▲	10	71987	Pin, Straight	2
▲	11	71988	Pin, Straight	2
▲	12	71989	Pin, Straight	2
▲	13	71990	Pin, Pipe	2
▲	14	71991	Pin, Pipe	1
▲	15	71992	Plug	1
▲	16	39105	Pin, Start Spring	1
▲	17	71993	Plug	1
▲	18	39062	Plug	1
▲	19	10895	Gasket	1
▲	20	70887	Bush, Governor Gear	1
	21	39063	O–Ring	1
	22	70888	Assembly Cock, Drain	1

Fig. 2 – Oil Pan Group

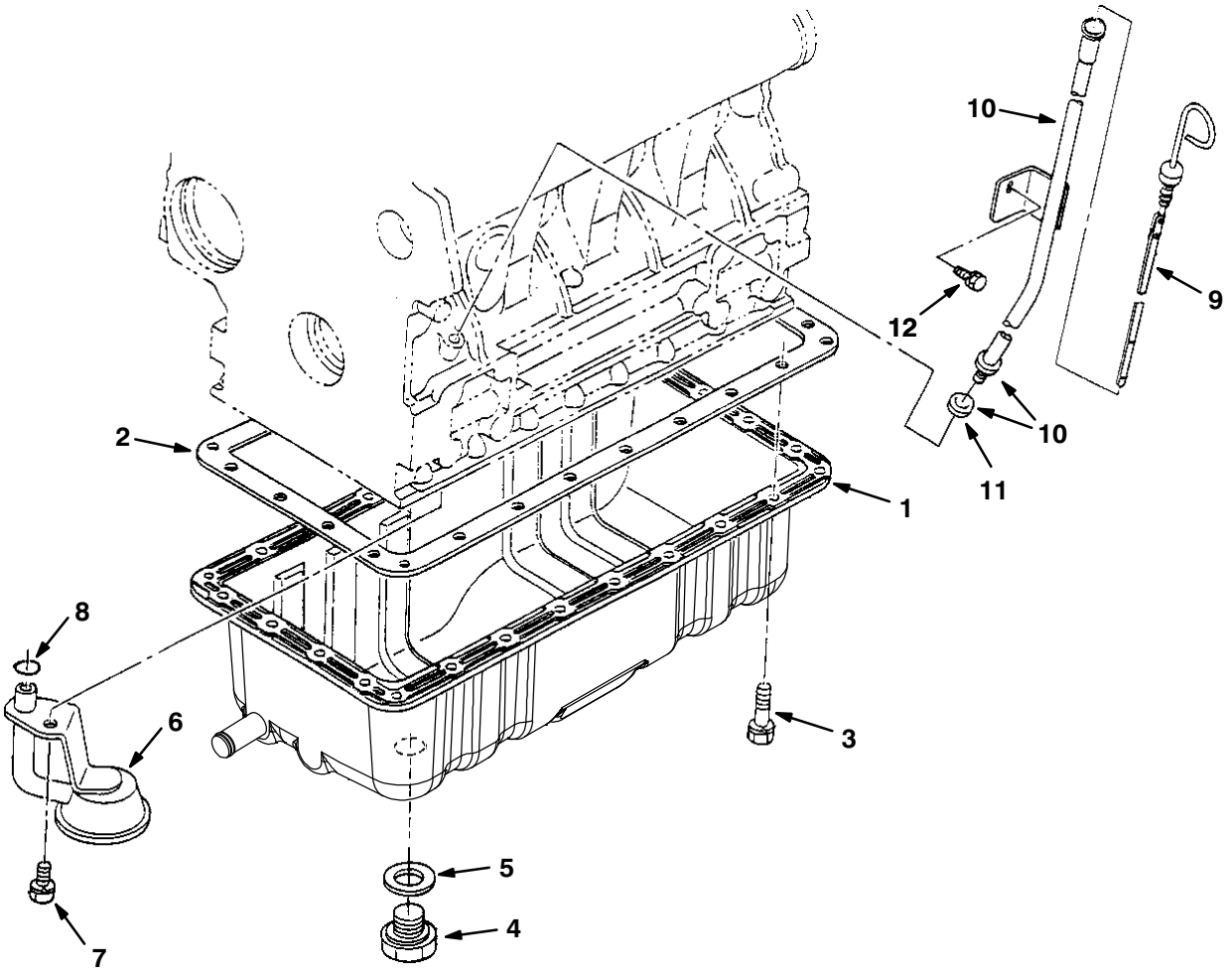

07409 – M20, D

	Ref.	Part No.	Description	Qty.
	1	1023144	Comp. Oil Pan (Rear Sump)	1
	2	70889	Gasket, Oil Pan	1
	3	71995	Bolt	26
	4	70890	Plug, Drain	1
	5	70891	Gasket	1
	6	9006001	Pump, Oil, Pickup [Sump, Ku]	1
	7	39094	Bolt	1
	8	41792	O–Ring	1
	9	70893	Gauge, Oil	1
▽	10	361428	Guide Assy, Oil Gauge	1
▲	11	361366	O–Ring	1
	12	39073	Bolt	1
		66187	Gasket Set, Lower	1

Fig. 3 – Cylinder Head Group

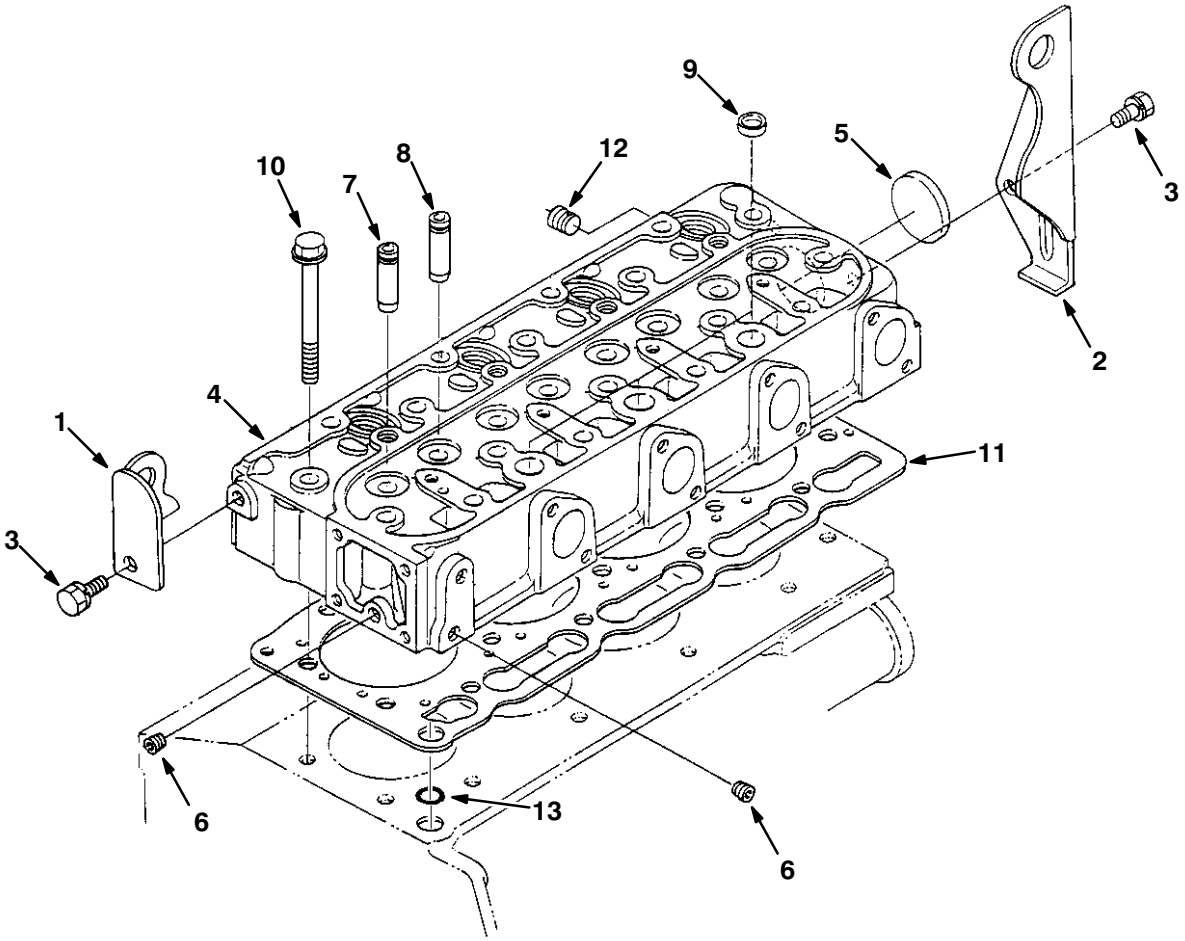

07411 – M20, D

	Ref.	Part No.	Description	Qty.
	1	71996	Hook, Engine 1	1
	2	71997	Hook, Engine 2	1
	3	39073	Bolt	2
	4	84631	Head, Cyl, W/O Valves	1
▽	4	372921	Head, Cyl, W/O Valve [Ku]	1
▲	5	51331	Cap, Sealing	1
▲	6	39088	Plug	2
▲	7	70895	Guide, Inlet Valve	4
▲	8	70896	Guide, Exhaust Valve	4
▲	9	71999	Cap, Sealing	3
	10	70897	Bolt, Cylinder Head	18
	11	70899	Gasket, Cyclinder Head	1
		66194	Gasket Set, Upper	1
	12	72010	Plug	1
	13	39063	O–Ring	1

Fig. 4 – Gear Case Group

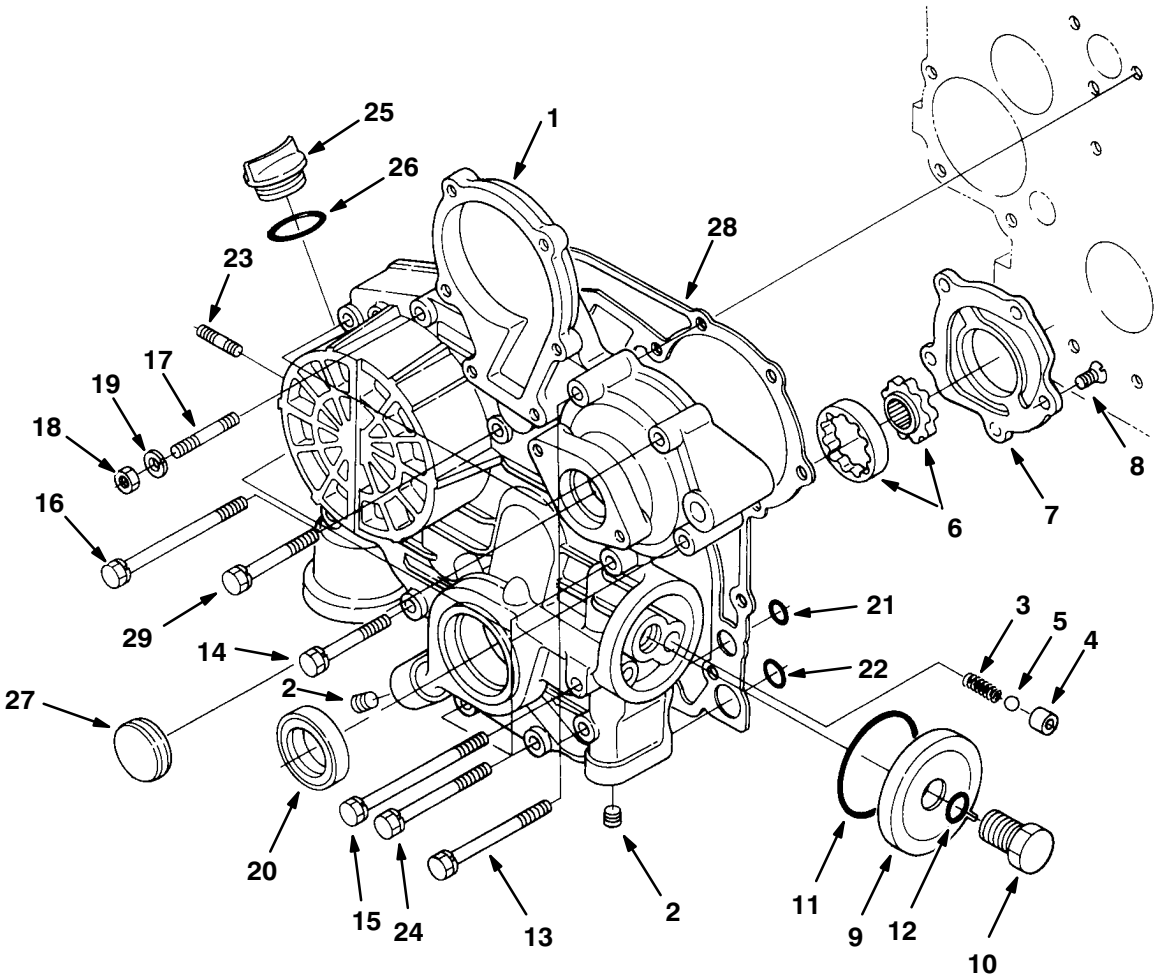

07413 – M20, D

Fig. 4 – Gear Case Group

	Ref.	Part No.	Description	Qty.
▽	1	72011	Comp. Case, Gear	1
▲	2	72012	Plug	4
▲	3	70900	Spring	1
▲	4	70901	Seat, Valve	1
▲	5	70902	Ball	1
▲	6	70903	Assembly Rotor, Oil Pump	1
▲	7	70904	Cover, Oil Pump	1
▲	8	72013	Screw	5
▲	9	70905	Cover	1
▲	10	70906	Bolt	1
▲	11	70907	O–Ring	1
▲	12	39103	O–Ring	1
	13	72995	Bolt	2
	14	72014	Bolt	1
	15	72015	Bolt	2
	16	72016	Bolt	1
	17	72017	Stud	1
	18	39121	Nut	1
	19	39065	Washer, Spring	1
	20	70909	Seal, Oil	1
	21	70910	O–Ring	2
	22	70911	O–Ring	2
	23	72018	Stud	2
	24	72994	Bolt	4
	25	39161	Oil Filter, Plug	1
	26	70913	O–Ring	1
	27	70189	Cover	1
	28	70912	Gasket, Gear Case	1
	29	72993	Bolt	3

Fig. 5 – Water Pump Group

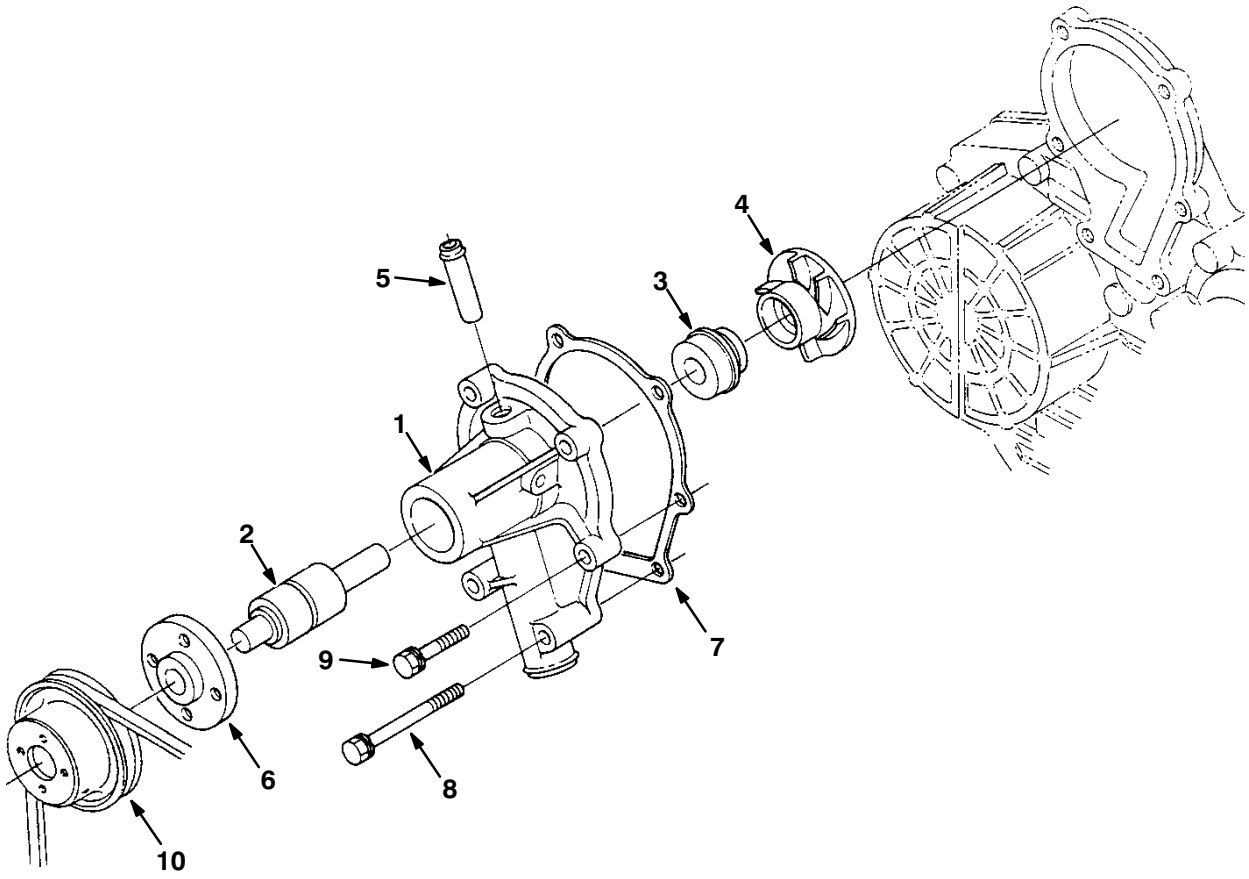

07415 – M20, D

	Ref.	Part No.	Description	Qty.
▽	1	66205	Assembly Pump, Water	1
▲	2	70915	Bearing, Ball	1
▲	3	70916	Assembly Seal, Mechanical	1
▲	4	70917	Impeller, Water Pump	1
▲	5	361440	Fitting, Pipe, Water [Ku]	1
▲	6	70919	Flange, Pump, Water [Ku]	1
▲	7	70920	Gasket, Water Pump	1
	8	72997	Bolt	2
	9	72996	Bolt	4
	10	55847	Pully, Fan	1

Fig. 6 – Main Bearing Case Group

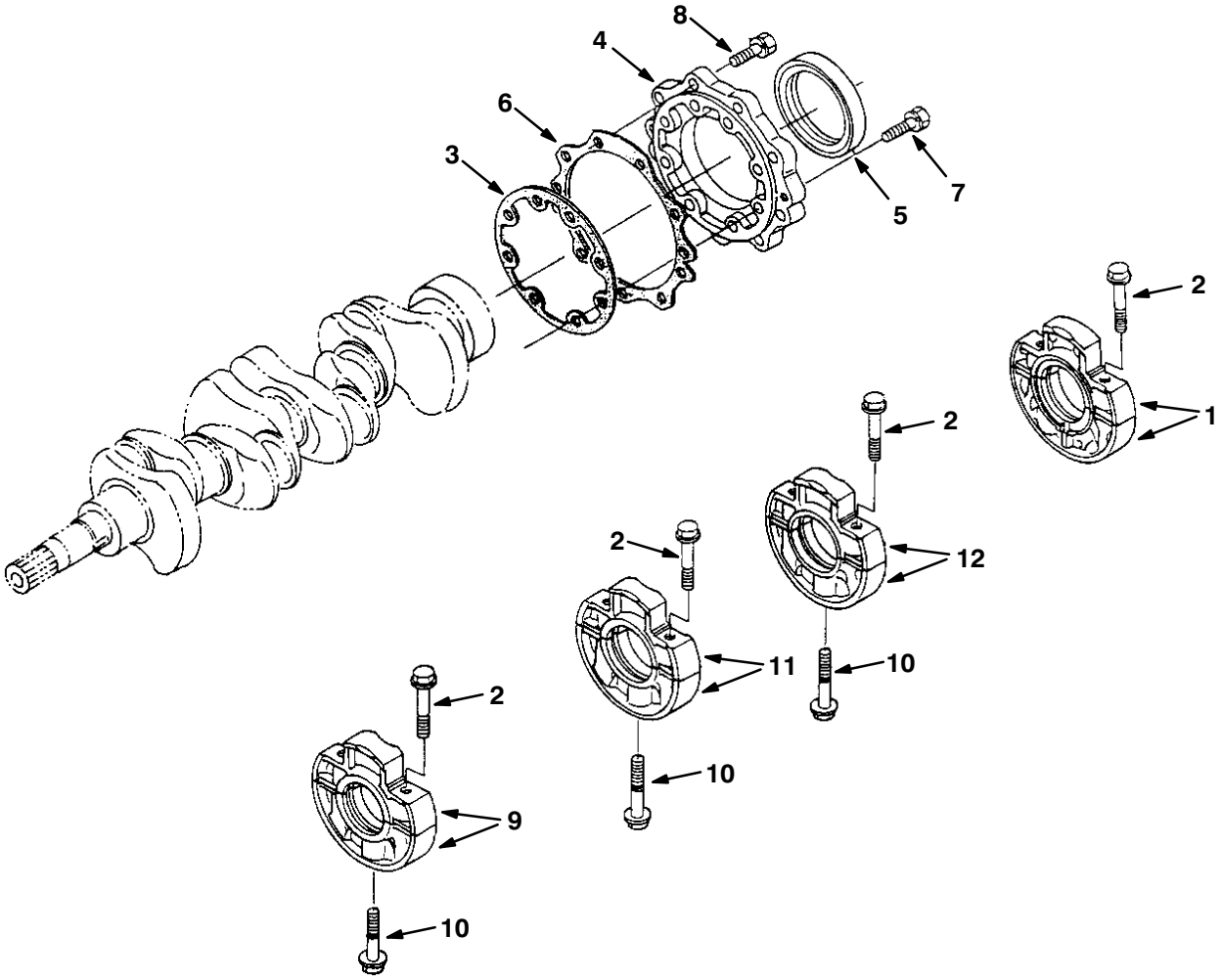

07417 – M20, D

Ref.	Part No.	Description	Qty.
1	70921	Assembly Case, Main Bearing	1
2	72998	Bolt, Bearing Case 1	8
3	70922	Gasket, Bearing Case	1
4	70923	Cover, Bearing Case	1
5	70924	Seal, Oil	1
6	70925	Gasket, Bearing Case Cover	1
7	72999	Bolt	8
8	39119	Bolt	9
9	70926	Assembly Case, Main Bearing 1	1
10	73479	Bolt. Bearing Case 2	3
11	70927	Assembly Case, Main Bearing 2	1
12	70928	Assembly Case, Main Bearing 3	1

Fig. 7 – Head Cover Group

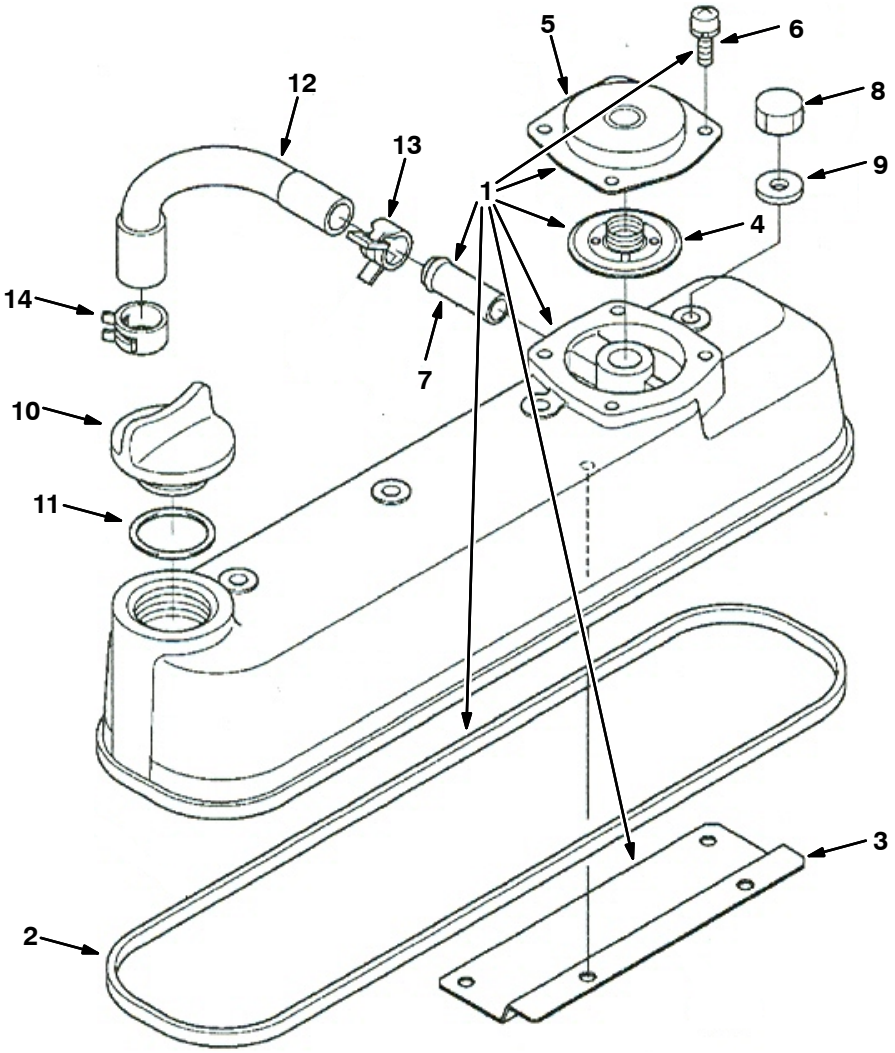

07419 – M20, D

	Ref.	Part No.	Description	Qty.
▽	1	372918	Cover Assy, Head, Cyl	1
▲	2	70929	Gasket, Head Cover	1
▲	3	372912	Shield, Breather	1
▲	4	372928	Valve, Breather, Complt	1
▲	5	372927	Cover, Breather	1
▲	6	372900	Screw, Pan	4
▲	7	30125	Pipe, Water	1
	8	73483	Nut, Cap	4
	9	73484	Gasket	4
	10	361374	Plug, Oil Filler	1
	11	70913	Seal, Org	1
	12	372913	Tube, Breather	1
	13	372901	Clamp, Hose	1
	14	372904	Clamp, Hose	1

Fig. 8 – Manifold Group

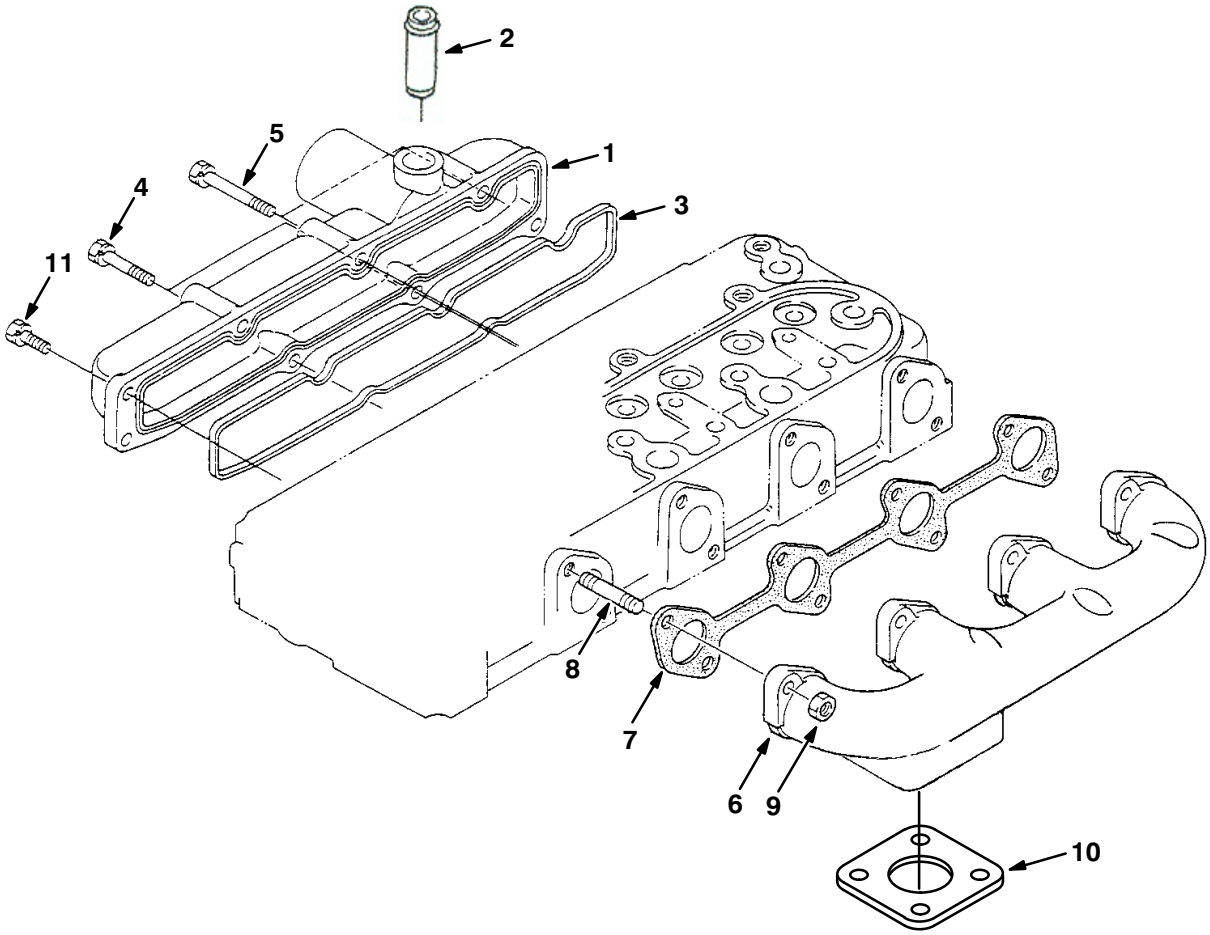

07421 – M20, D

	Ref.	Part No.	Description	Qty.
▽	1	372905	Manifold Assy, Inlet	1
▲	2	73481	Pipe, Breather [Ku]	1
▲	3	70934	Gasket, Manifold, Intake [Ku]	1
	4	72996	Bolt	2
	5	72994	Bolt	3
	6	73487	Manifold, Exhaust, Front, Down	1
	7	70935	Gasket, Ex–manifold	1
	8	73488	Stud	8
	9	361427	Nut	8
	10	51332	Gasket Ku	1
	11	40409	Bolt	3

Fig. 9 – Valve, Rocker Arm Group

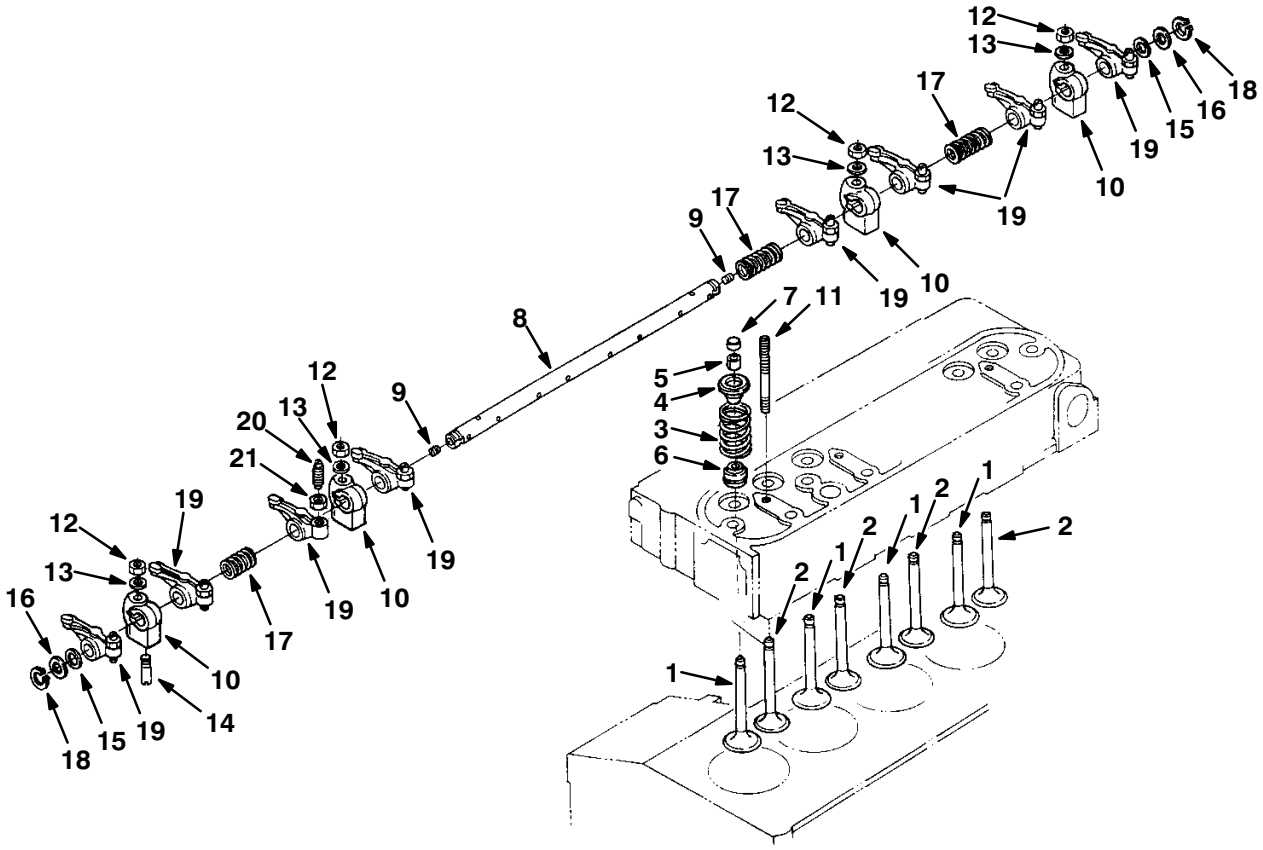

07423 – M20, D

	Ref.	Part No.	Description	Qty.
	1	70936	Valve, Inlet	4
	2	70937	Valve, Exhaust	4
	3	73491	Spring, Valve	8
	4	73492	Retainer, Valve Spring	8
	5	73493	Collet, Valve Spring	8
	6	73494	Seal, Valve Stem	8
	7	361392	Cap, Valve	8
▽	8	73495	Assembly Shaft, R–arm	1
▲	9	73496	Screw, Set	2
	10	73497	Bracket, Rocker Arm	4
	11	73498	Stud	4
	12	73499	Nut	4
	13	73500	Washer, Plain	4
	14	73501	Screw, Set	1
	15	73502	Washer 1	2
	16	73503	Washer 2	2
	17	73504	Spring, Rocker Arm	3
	18	73505	Cir–clip, External	2
▽	19	73506	Assembly Rocker Arm	8
▲	20	73507	Screw, Adjusting	8
▲	21	73508	Nut	8

Fig. 10 – Fuel Camshaft Group

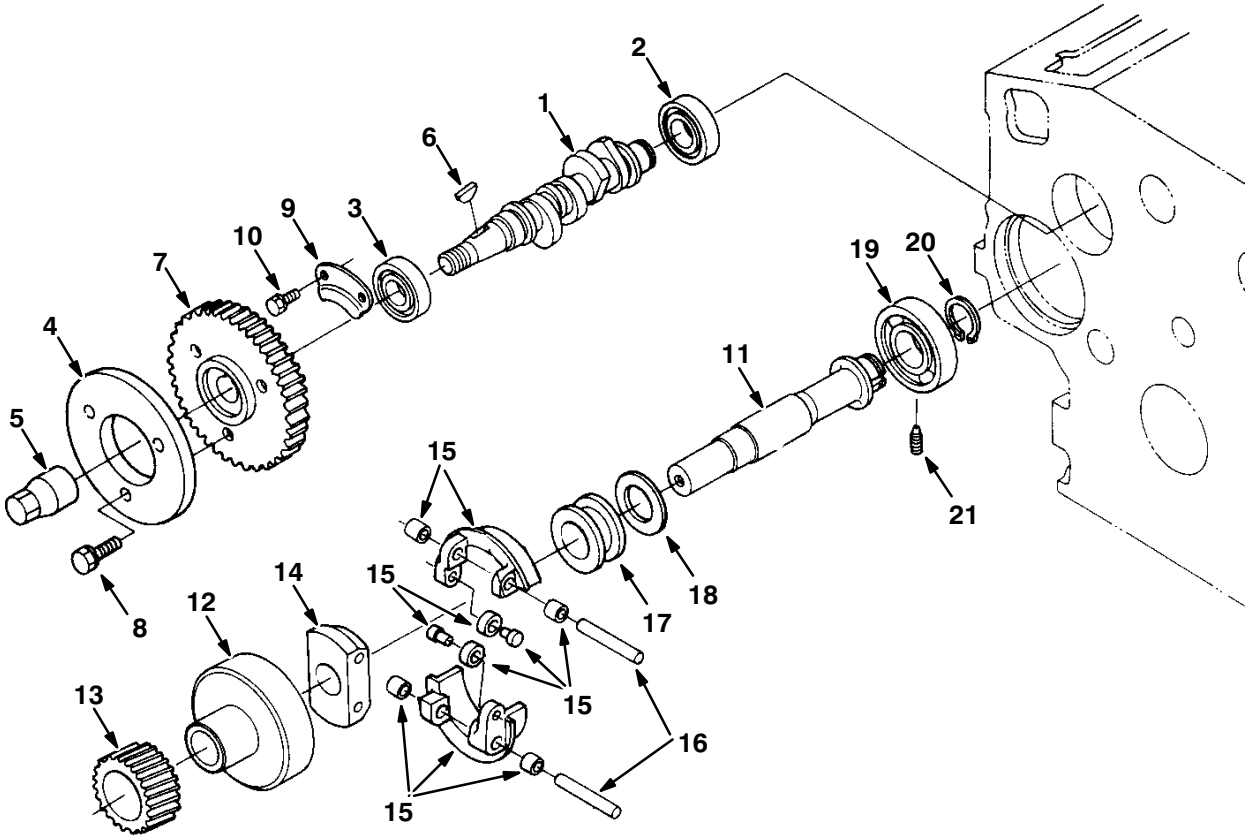

07441 – M20, D

	Ref.	Part No.	Description	Qty.
	1	84636	Camshaft, Fuel	1
	2	70975	Bearing, Ball	1
	3	70976	Bearing, Ball	1
	4	73592	Cam, Fuel	1
	5	73593	Nut, Cap	1
	6	73594	Key, Woodruff	1
	7	73595	Gear, Injection Pump	1
	8	40409	Bolt	3
	9	73596	Stopper	1
	10	71995	Bolt	2
▽	11	73597	Assembly Shaft, Governor	1
▲	12	73598	Holder, Governor Gear	1
▲	13	73599	Gear, Governor	1
▲	14	73600	Holder,	1
▲	15	73601	Comp. Weight, Governor	2
▲	16	73602	Shaft, Governor Weight	2
▲	17	70977	Sleeve, Governor	1
▲	18	70978	Washer, Thrust	1
	19	70979	Bearing, Ball	1
	20	73603	Cir–clip, Governor Shaft	1
	21	73604	Screw, Set	1

Fig. 11 – Camshaft Group

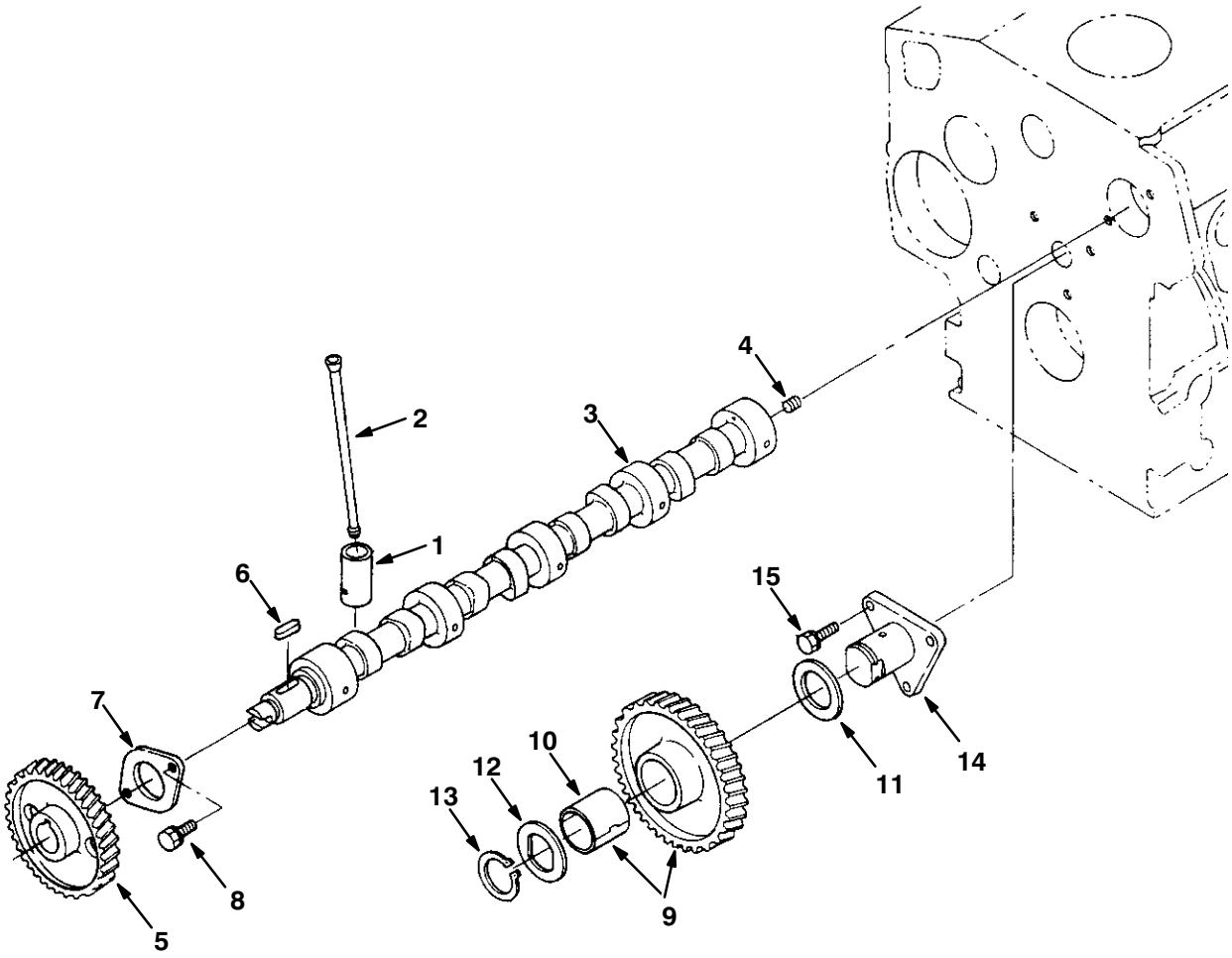

07425 – M20, D

Fig. 11 – Camshaft Group

	Ref.	Part No.	Description	Qty.
	1	12895	Tappet	8
	2	73509	Push Rod	8
▽	3	73510	Assembly Camshaft	1
▲	4	39197	Screw, Set	1
▲	5	73511	Gear, Camshaft	1
▲	6	73512	Key, Feather	1
▲	7	73513	Stopper, Camshaft	1
▲	8	39160	Bolt	2
▽	9	73514	Comp Idle Gear 1	1
▲	10	73515	Bush, Idle Gear	1
	11	73516	Collar, Idle Gear 1	1
	12	73517	Collar, Idle Gear 2	1
	13	73518	Cir–clip, Idle Gear	1
	14	73519	Shaft, Idle Gear 1	1
	15	41973	Bolt	3

Fig. 12 – Piston and Crankshaft Group

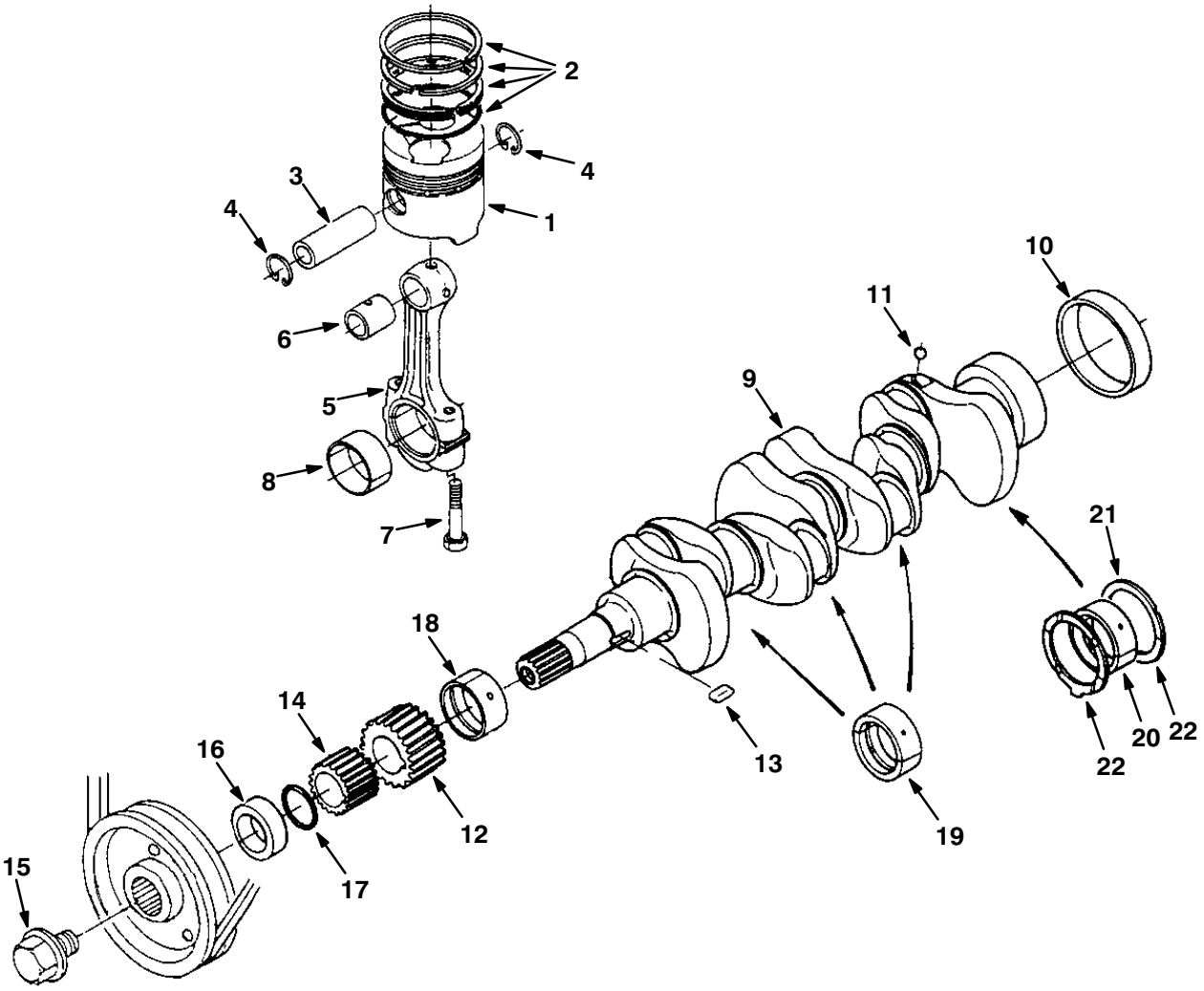

07427 – M20, D

Fig. 12 – Piston and Crankshaft Group

	Ref.	Part No.	Description	Qty.
	1	73520	Piston	4
	1	73521	Piston 05	4
	2	70938	Assembly Piston Ring	4
	2	70939	Assembly Piston Ring 05	4
	3	73522	Pin, Piston	4
	4	73523	Cir–clip, Piston Pin	8
▽	5	73524	Assembly Connecting Rod	4
▲	6	70940	Bush, Piston Pin	4
▲	7	73525	Bolt, Connecting Rod	8
▲	8	70941	Metal, Crankpin	4
▲	8	66204	Metal, Crankpin 02	4
▲	8	66207	Metal, Crankpin 04	4
▽	9	73526	Comp. Crankshaft	1
▲	10	70942	Sleeve, Crankshaft	1
▲	11	73527	Ball	4
▲	12	73528	Gear, Crankshaft	1
▲	13	73529	Key	1
▲	14	73530	Gear, Oil Pump Drive	1
	15	73532	Bolt	1
	16	70943	Collar, Crankshaft	1
	17	70944	O–Ring	1
	18	70945	Metal, Crankshaft 1	1
	18	70946	Metal, Crankshaft1 02	1
	18	70947	Metal, Crankshaft1 04	1
	19	70948	Metal, Crankshaft 2	3
	19	70949	Metal, Crankshaft2 02	3
	19	70950	Metal, Crankshaft2 04	3
	20	70951	Metal, Crankshaft 3	1
	20	70952	Metal, Crankshaft3 02	1
	20	70953	Metal, Crankshaft3 04	1
	21	10844	Metal, Side 1	2
	21	70954	Metal, Side 1 02	2
	21	70955	Metal, Side 1 04	2
	22	10845	Metal, Side 2	2
	22	30121	Metal, Side 2 02	2
	22	30122	Metal, Side 2 04	2

Fig. 13 – Flywheel Group

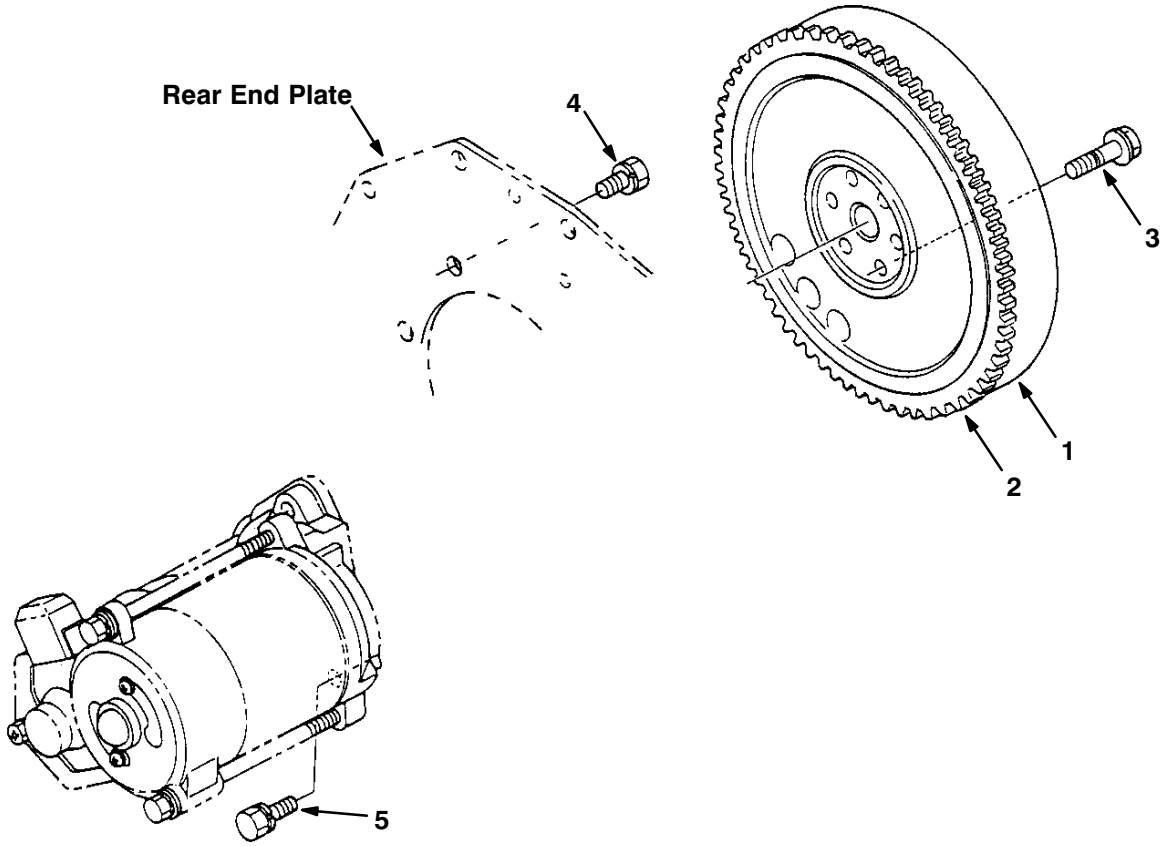

07429 – M20, D

Fig. 13 – Flywheel Group

	Ref.	Part No.	Description	Qty.
▽	1	70956	Comp. Flywheel	1
▲	2	70957	Gear, Ring	1
	3	73533	Bolt, Flywheel	6
	4	73534	Bolt	8
	5	73535	Bolt	2

Fig. 14 – Starter Breakdown, 74405

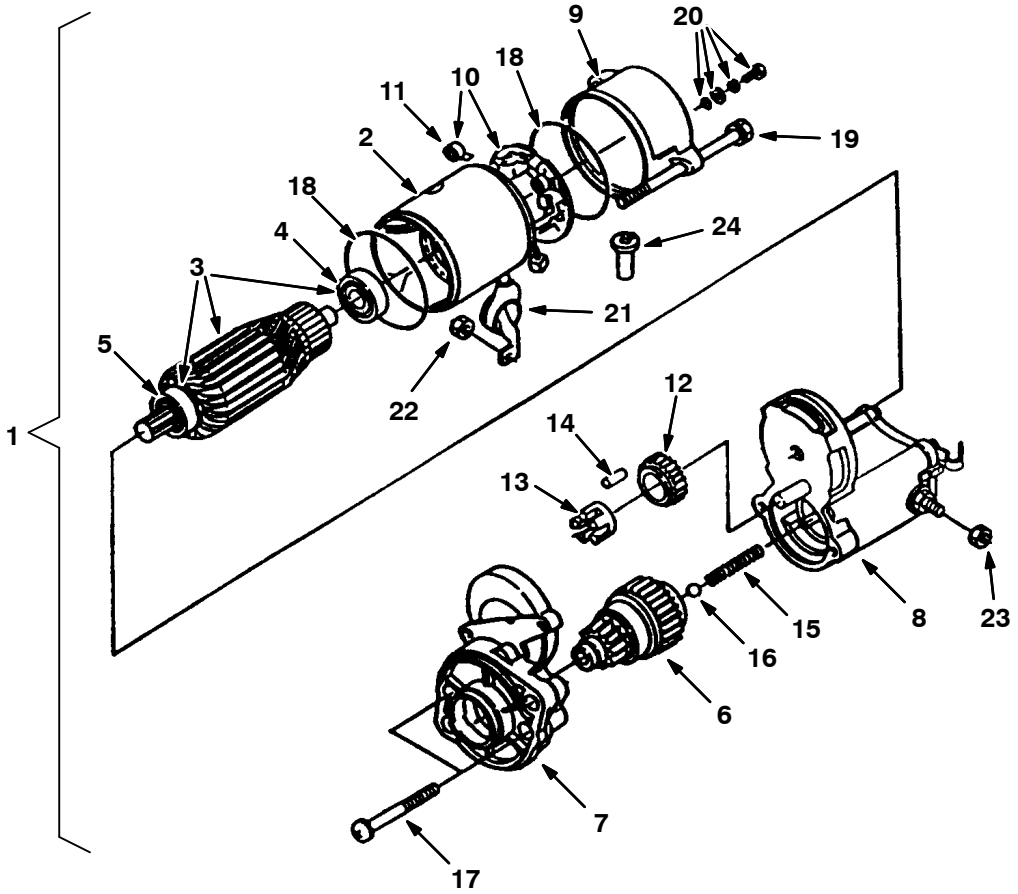

10182 – M20, D

Fig. 14 – Starter Breakdown, 74405

	Ref.	Part No.	Description	Qty.
▽	1	74405	Assy Starter	1
▲	2	70196	Assy Yoke	1
▲▽	3	70197	Assy Armature	1
▲▲	4	70198	Bearing	1
▲▲	5	70199	Bearing	1
▲	6	70200	Clutch, Over Running	1
▲	7	70201	Frame, Drive End	1
▲	8	70202	Assy Switch, Magneto	1
▲	9	70203	Frame, End	1
▲▽	10	70204	Assy Holder, Brush	1
▲▲	11	70205	Spring, Brush	4
▲	12	70206	Gear	1
▲	13	70207	Retainer	1
▲	14	73545	Roller	5
▲	15	70208	Spring	1
▲	16	73547	Ball	1
▲	17	70209	Bolt	2
▲	18	20433	O–Ring	2
▲	19	70210	Bolt	2
▲	20	20432	Assy Bolt	2
▲	21	70211	Cover	1
▲	22	73551	Nut, Hexagon	1
▲	23	70212	Nut, Hexagon	1
▲	24	70213	Pipe, Drain	1

Fig. 15 – Nozzle Holder and Glow Plug Group

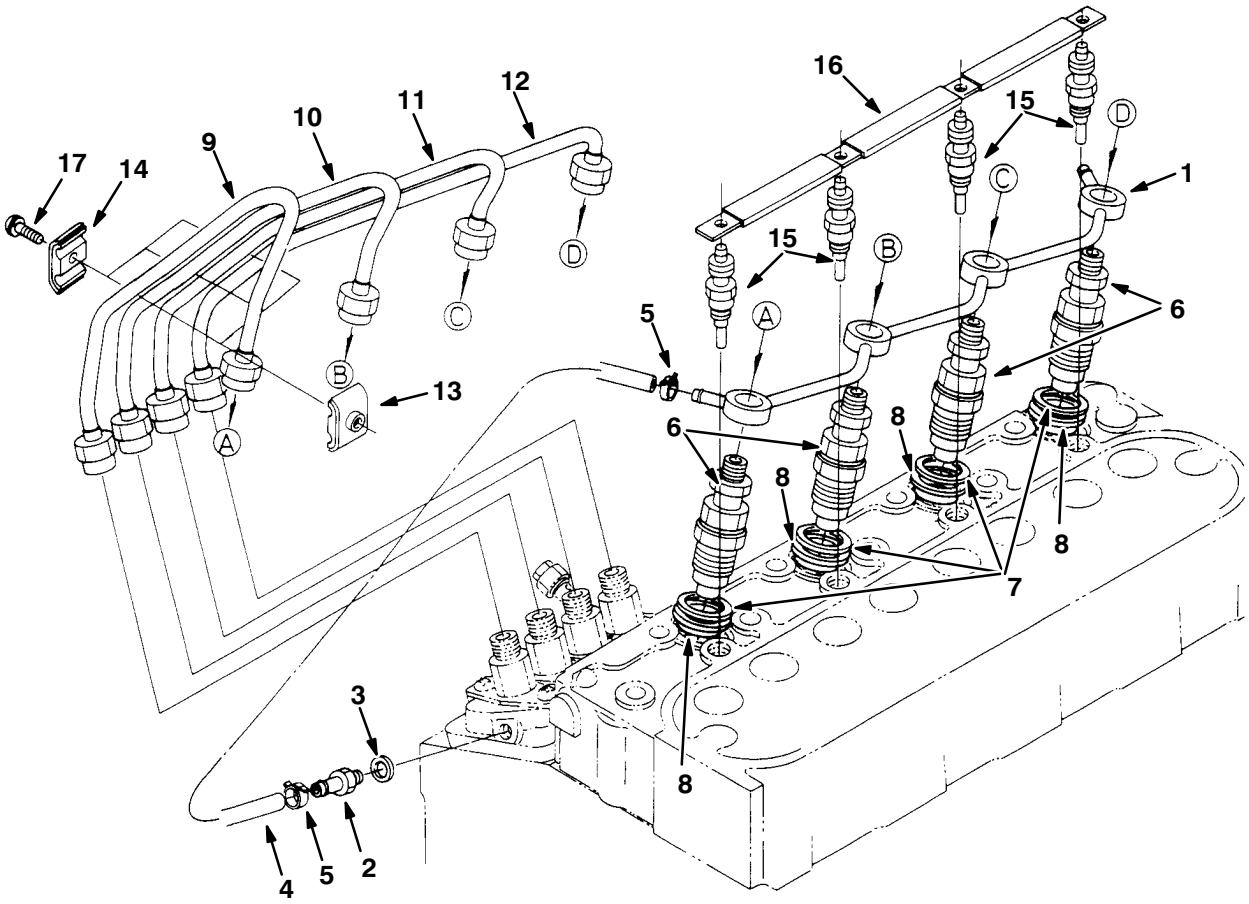

07433 – M20, D

Fig. 15 – Nozzle Holder and Glow Plug Group

	Ref.	Part No.	Description	Qty.
	1	73554	Pipe, Over Flow	1
	2	73555	Screw	1
	3	40166	Gasket	1
▽	4	361373	Assembly Pipe, Over Flow	1
▲	5	361368	Band, Pipe	2
▽	6	372917	Housing Assy, Nozzle	4
▲	7	70964	Gasket	1
▲	8	20719	Seal, Heat	1
	9	70965	Pipe, Injection 1	1
	10	70966	Pipe, Injection 2	1
	11	70967	Pipe, Injection 3	1
	12	70968	Pipe, Injection 4	1
	13	30131	Clamp, Pipe 1	3
	14	30132	Clamp, Pipe 2	3
	15	84638	Plug, Glow	4
	16	73560	Cord, Glow Plug	1
	17	39508	Screw, With Washer	3

Fig. 16 – Injection Pump Group

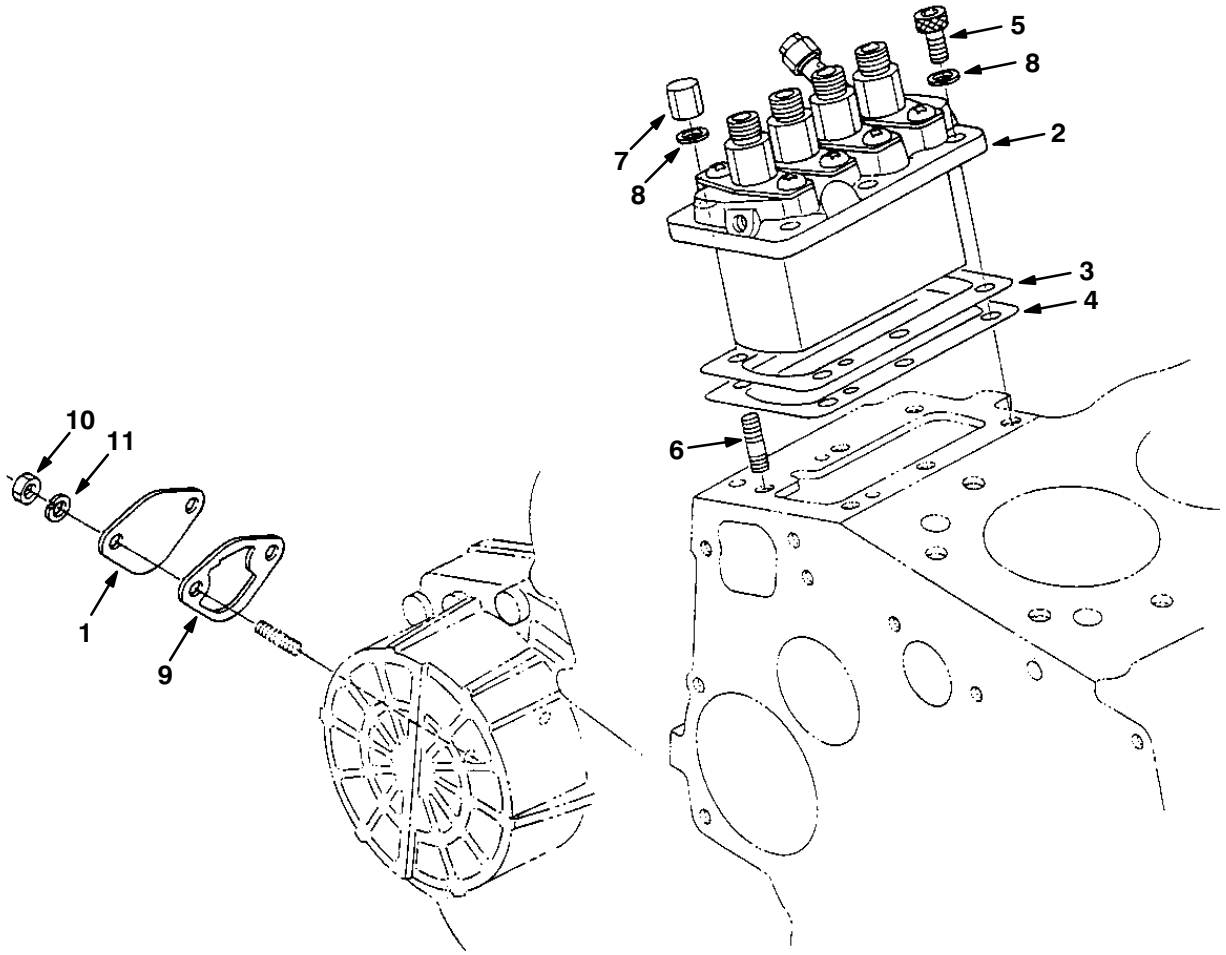

07437 – M20, D

Fig. 16 – Injection Pump Group

Ref.	Part No.	Description	Qty.
1	73565	Fuel Pump Cover Plate	1
2	84635	Assembly Pump, Injection (See Injection Pump Breakdown)	1
3	70972	Shim, Injection Pump 0.20 mm	1
4	70973	Shim, Injection Pump 0.25 mm	2
4	84644	Shim, Injection Pump 0.30 mm	1
5	73561	Bolt	3
6	73562	Stud	3
7	73563	Nut, Cap	3
8	39065	Washer, Spring	6
9	70974	Gasket, Fuel Pump	1
10	39121	Nut	2
11	39065	Washer, Spring	2

Fig. 17 – Injection Pump Breakdown

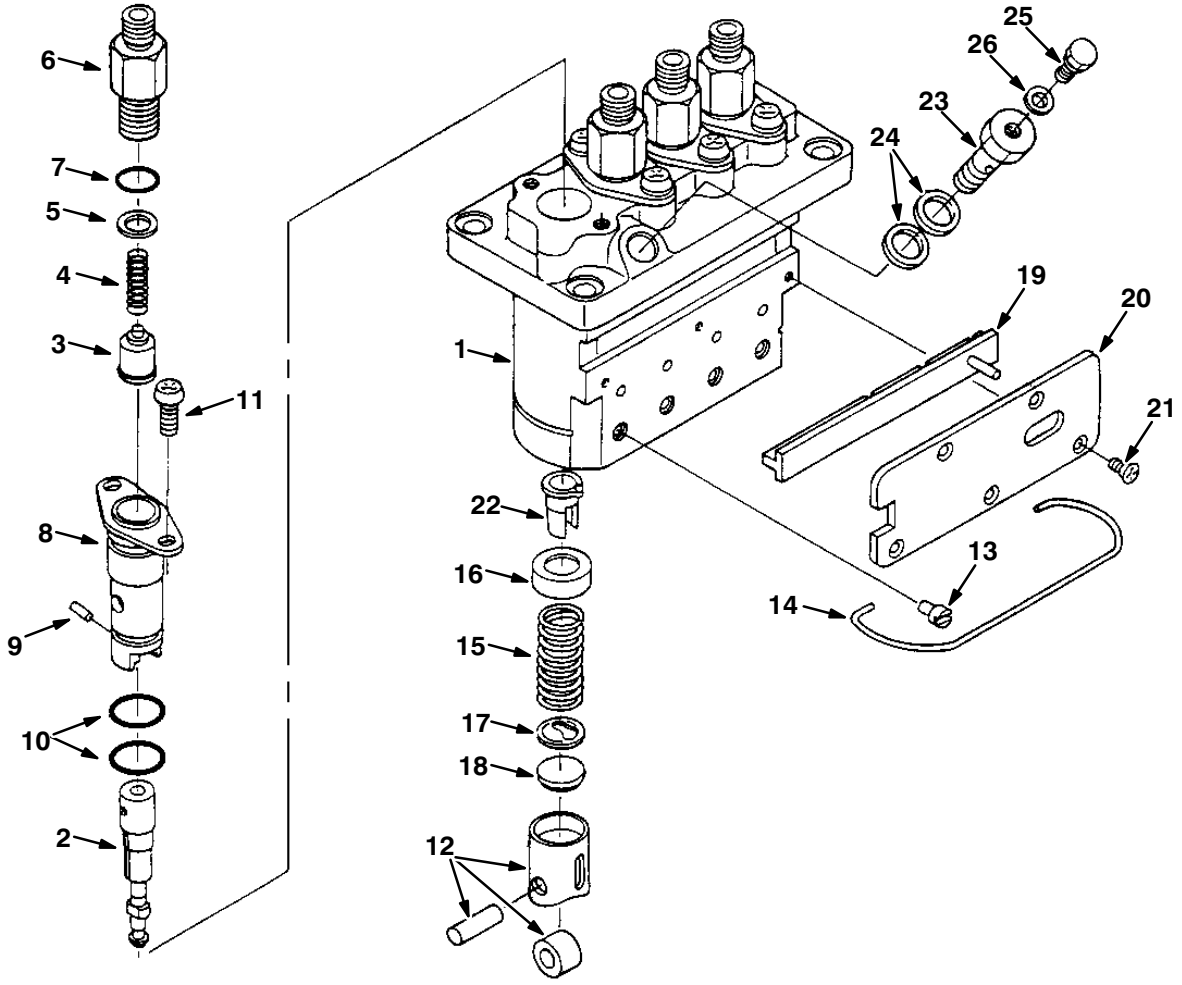

07439 – M20, D

Fig. 17 – Injection Pump Breakdown

	Ref.	Part No.	Description	Qty.
▽	1	84635	Assembly Pump, Injection	1
▲	2	84648	Plunger, Pump	4
▲	3	73567	Valve, Delivery	4
▲	4	73568	Spring, Delivery Valve	4
▲	5	73569	Gasket, Delivery Valve	4
▲	6	73570	Holder, Delivery Valve	4
▲	7	73571	O–Ring	4
▲	8	73572	Flange, Sleeve	4
▲	9	73573	Pin, Joint	4
▲	10	73574	O–Ring	8
▲	11	73575	Screw	8
▲	12	73576	Assembly Tappet	4
▲	13	73577	Pin, Tappet Guide	4
▲	14	73578	Pin, Clamp	1
▲	15	73579	Spring, Plunger	4
▲	16	73580	Seat, Spring Upper	4
▲	17	73581	Seat, Spring Lower	4
▲	18	73582	Shim	1
▲	19	84649	Rack, Control	1
▲	20	84650	Plate	1
▲	21	73585	Screw	5
▲	22	73586	Sleeve, Control	4
▲	23	84651	Screw, Follow	1
▲	24	73588	Gasket	2
▲	25	73589	Screw	1
▲	26	73590	Gasket	1

Fig. 18 – Idling Group

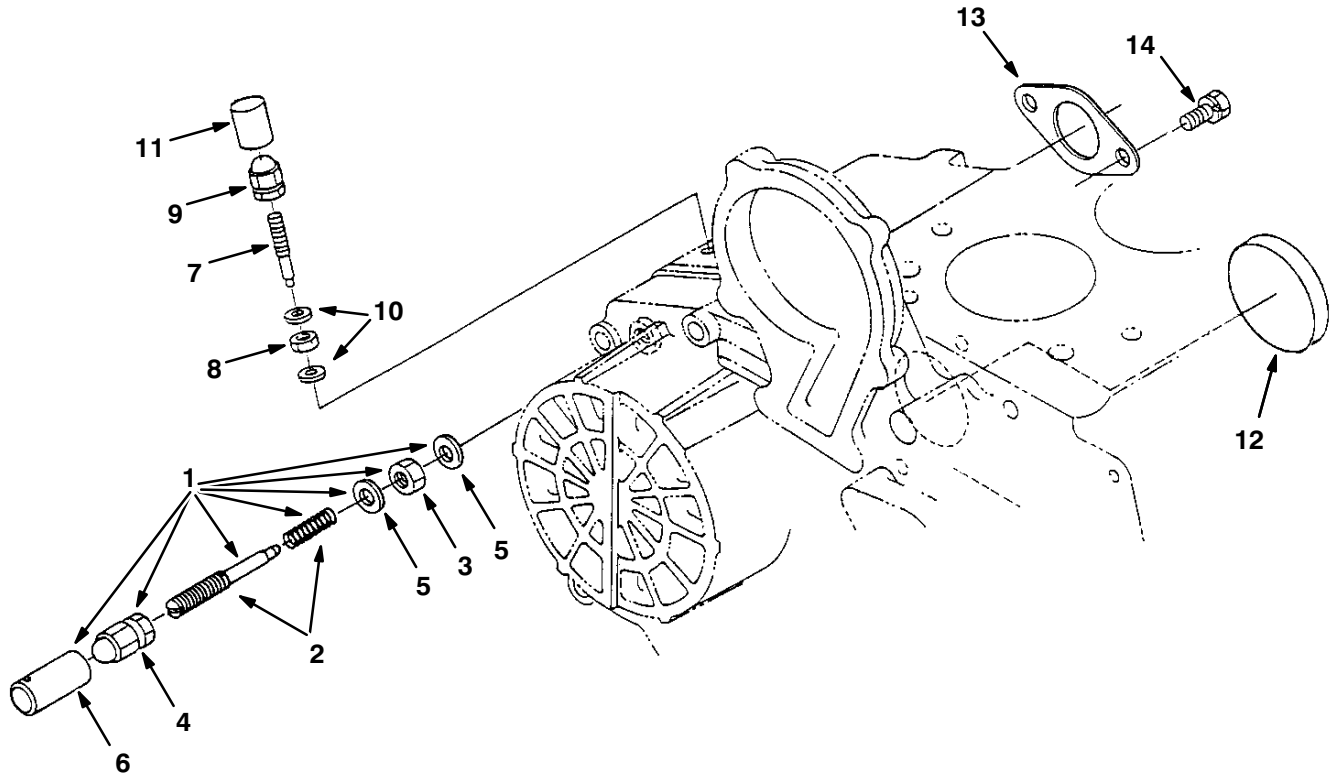

07443 – M20, D

	Ref.	Part No.	Description	Qty.
▽	1	70980	Assembly Apparatus, Idle	1
▲	2	73605	Assembly Bolt, Adjusting	1
▲	3	73606	Nut	1
▲	4	73607	Nut, Cap	1
▲	5	40166	Gasket	2
▲	6	30136	Cap	1
	7	73610	Bolt, Adjusting	1
	8	73606	Nut	1
	9	73607	Nut, Cap	1
	10	40166	Gasket	2
	11	30136	Cap	1
	12	70188	Cover	1
	13	70165	Gasket, Thrtl Blk	1
	14	39160	Bolt	2

Fig. 19 – Speed Control Plate Group

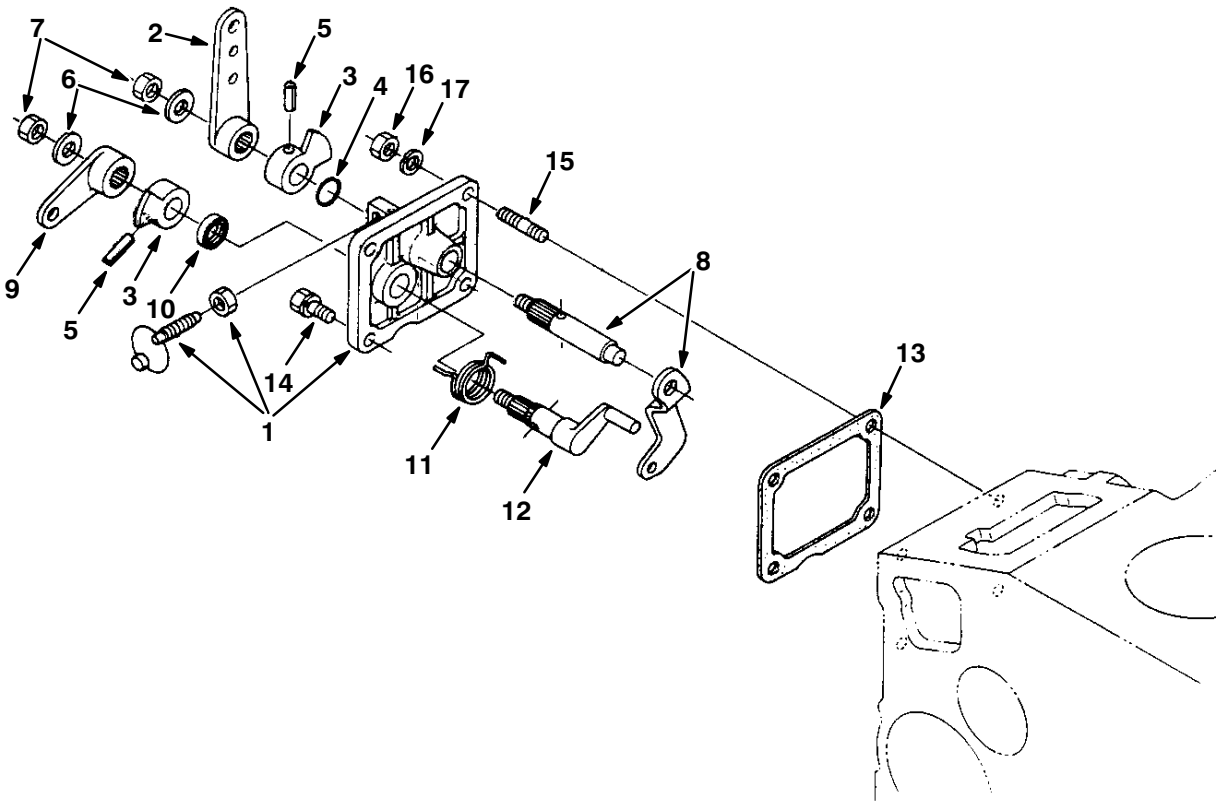

07445 – M20, D

	Ref.	Part No.	Description	Qty.
▽	1	70982	Assembly Plate, Control	1
▲	2	73618	Lever, Speed Control	1
▲	3	73619	Lever, Speed Control	2
▲	4	73620	O–Ring	1
▲	5	40407	Pin, Spring	2
▲	6	73621	Washer, Plain	2
▲	7	73622	Nut	2
▲	8	73623	Comp. Lever, Governor	1
▲	9	73624	Lever, Engine Stop	1
▲	10	70983	Seal, Oil	1
▲	11	73625	Spring, Return	1
▲	12	73626	Shaft, Stop Lever	1
	13	70984	Gasket	1
	14	41973	Bolt	2
	15	72018	Stud	2
	16	39121	Nut	2
	17	39065	Washer, Spring	2

Fig. 20 – Governor Group

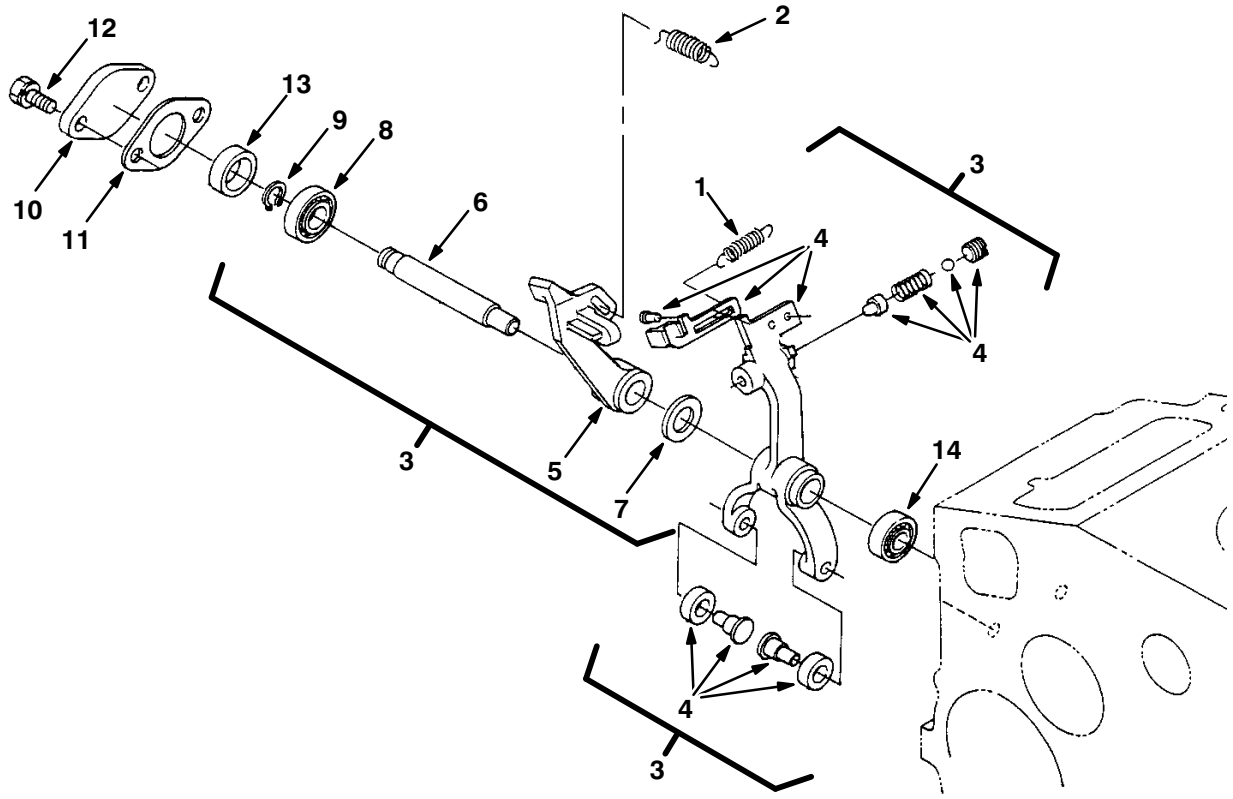

07447 – M20, D

	Ref.	Part No.	Description	Qty.
	1	70985	Spring, Start	1
	2	70986	Spring, Governor	1
▽	3	73627	Assembly Lever, Fork	1
▲	4	70987	Comp. Lever, Fork 1	1
▲	5	73628	Lever, Fork 2	1
▲	6	73629	Shaft, Fork Lever	1
▲	7	70988	Washer, Plain	1
▲	8	70989	Bearing, Ball	1
▲	9	73630	Cir–clip, External	1
	10	73631	Cover, Fork Lever Shaft	1
	11	361430	Gasket	1
	12	39160	Bolt	2
	13	70991	Collar 1	1
	14	70992	Bearing, Ball	1

Fig. 21 – Water Flange Group

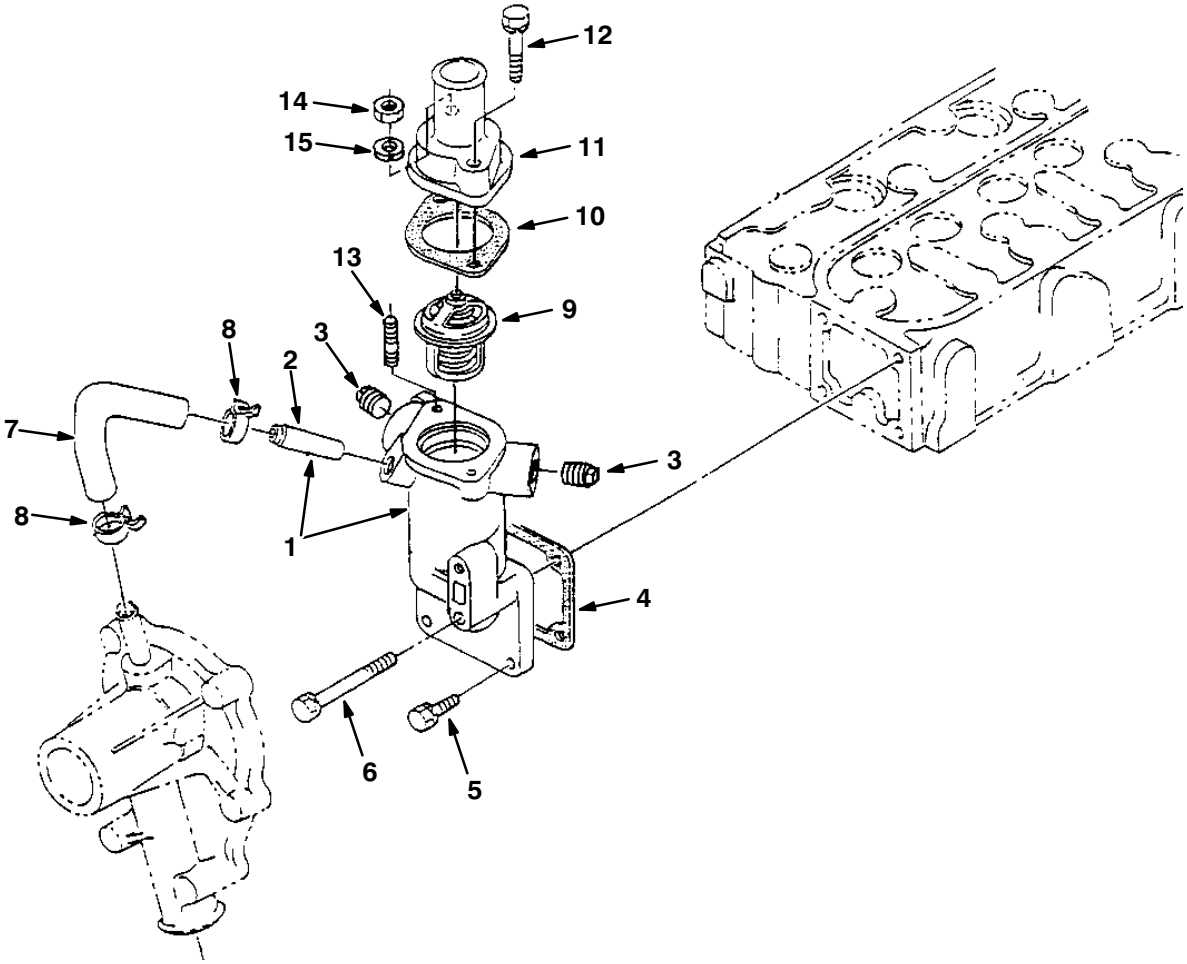

07451 – M20, D

	Ref.	Part No.	Description	Qty.
▽	1	368090	Flange, Water [Ku]	1
▲	2	361440	Fitting, Pipe, Water [Ku]	1
	3	73632	Fitting, Pipe, Plug [Ku]	2
	4	70994	Gasket, Hsg, Thermostat [Ku]	1
	5	41973	Bolt, Hex [Ku]	3
	6	72995	Screw, Hex [Ku]	1
	7	73633	Hose, Water [Ku]	1
	8	73634	Clamp, Hose, Heater [Ku]	2
	9	10852	Thermostat, 180deg, 1.7d [Ku]	1
	10	10851	Gasket	1
	11	368091	Housing, Thermostat [Ku]	1
	12	72996	Screw, Hex [Ku]	1
	13	73636	Stud	1
	14	39121	Nut, Hex [Ku]	1
	15	39065	Washer, Lock, Split [Ku]	2

SECTION 6

Contents **Page**

Fig. 1 – Crankcase Group 6–2
Fig. 2 – Oil Pan Group 6–4
Fig. 3 – Cylinder Head Group 6–5
Fig. 4 – Gear Case Group 6–6
Fig. 5 – Water Pump Group 6–8
Fig. 6 – Main Bearing Case Group 6–9
Fig. 7 – Head Cover Group 6–10
Fig. 8 – Manifold Group 6–11
Fig. 9 – Valve, Rocker Arm Group 6–12
Fig. 10 – Fuel Camshaft Group 6–13
Fig. 11 – Camshaft Group 6–14
Fig. 12 – Piston and Crankshaft Group 6–16
Fig. 13 – Flywheel Group 6–18
Fig. 14 – Starter Breakdown, 74405 6–19
Fig. 15 – Nozzle Holder and Glow Plug Group . 6–20
Fig. 16 – Nozzle Holder Breakdown 6–21
Fig. 17 – Injection Pump Group 6–22
Fig. 18 – Injection Pump Breakdown 6–24
Fig. 19 – Idling Group 6–26
Fig. 20 – Speed Control Plate Group 6–27
Fig. 21 – Governor Group 6–28
Fig. 22 – Water Flange Group 6–29

Fig. 1 – Crankcase Group

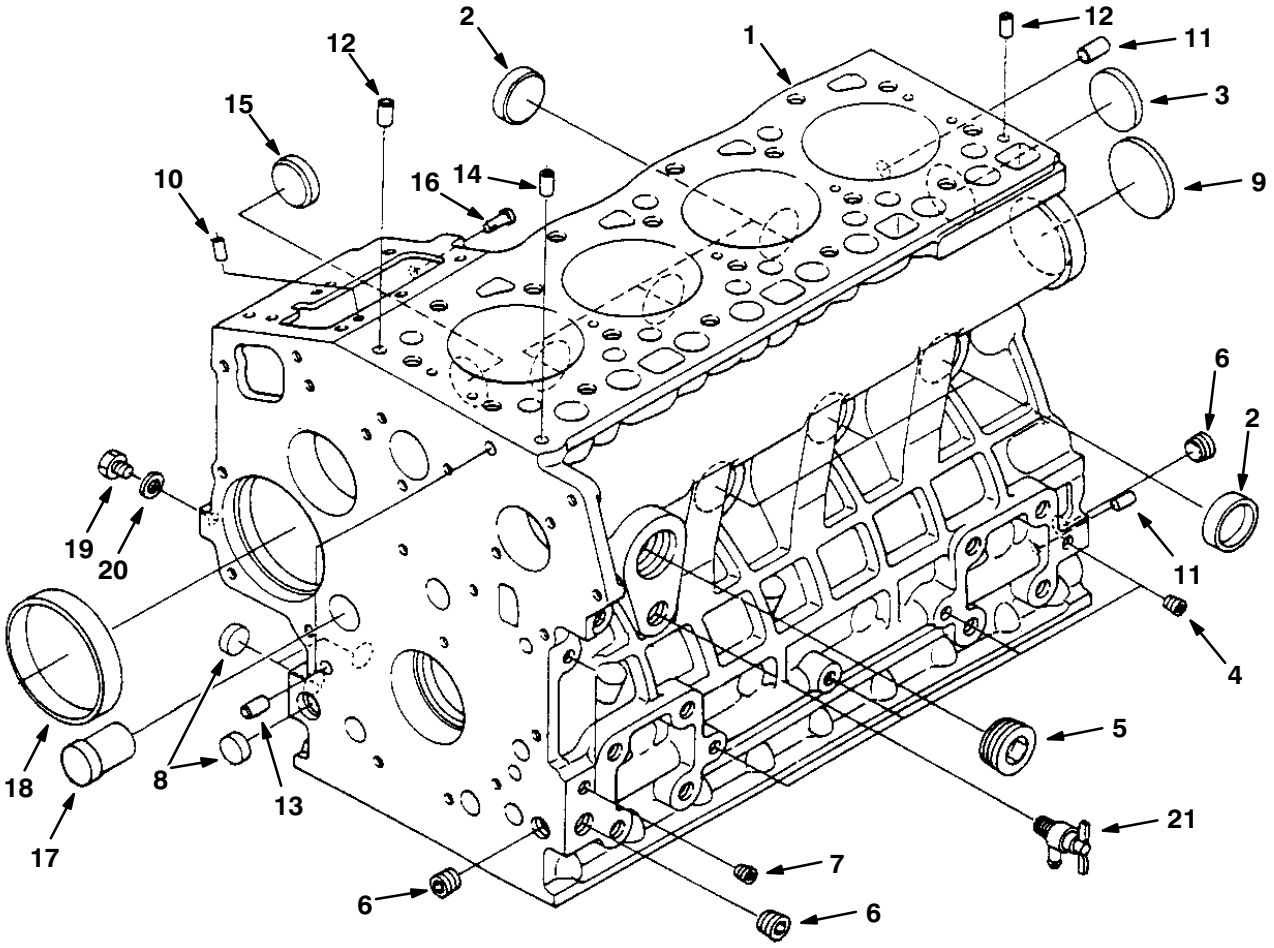

Fig. 1 – Crankcase Group

	Ref.	Part No.	Description	Qty.
▽	1	9004335	Crankcase, Complt [Ku]	1
▲	2	70998	Plug, Cup, Sealing [Ku]	6
▲	3	39087	Plug, Cup, Sealing [Ku]	1
▲	4	39088	Fitting, Pipe, Plug [Ku]	4
▲	5	70999	Plug, Eng [Ku]	1
▲	6	71985	Fitting, Pipe, Plug [Ku]	3
▲	7	39051	Fitting, Pipe, Plug [Ku]	2
▲	8	361436	Plug, Cup, Sealing [Ku]	3
▲	9	71986	Plug, Cup, Sealing [Ku]	1
▲	10	71987	Pin, Dowel [Ku]	2
▲	11	71988	Pin, Dowel [Ku]	2
▲	12	9004431	Pin, Straight [Ku]	2
▲	13	71990	Pin, Eng [Ku]	2
▲	14	71991	Tube, Pin [Ku]	1
▲	15	71992	Plug, Cup, Sealing [Ku]	1
▲	16	9004337	Pin, Start, Spring	1
▲	17	71993	Plug, Eng [Ku]	1
▲	18	70887	Bushing, Gear, Gov [Ku]	1
▲	19	39062	Fitting, Plug [Ku]	1
▲	20	393570	Gasket	1
	21	70888	Fitting, Draincock [Ku]	1

Fig. 2 – Oil Pan Group

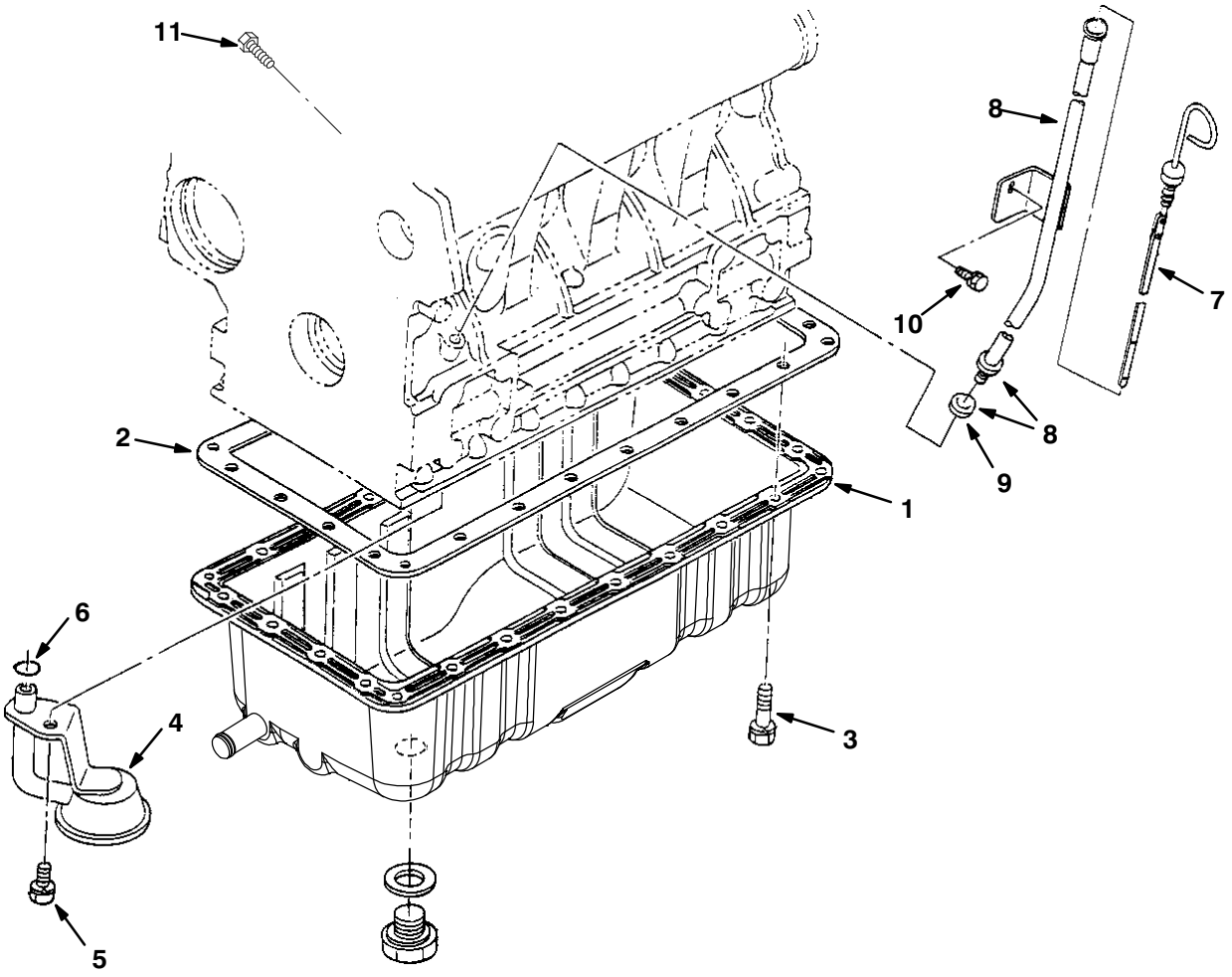

	Ref.	Part No.	Description	Qty.
	1	1023144	Pan, Oil, Dsl	1
	2	70889	Gasket, Pan, Oil	1
	3	9004338	Bolt [Ku]	26
	4	9003888	Filter, Oil [Ku]	1
	5	39094	Screw, Hex [Ku]	1
	6	9004339	O–Ring [Ku]	1
	7	9004435	Gauge, Oil [Ku]	1
▽	8	361428	Dipstick, Oil [Ku]	1
▲	9	361366	Seal, Org [Ku]	1
	10	39073	Screw, Hex [Ku]	1
		66187	Gasket Set	1
	11	9004348	Plug, Gauge, Oil [Ku]	1

Fig. 3 – Cylinder Head Group

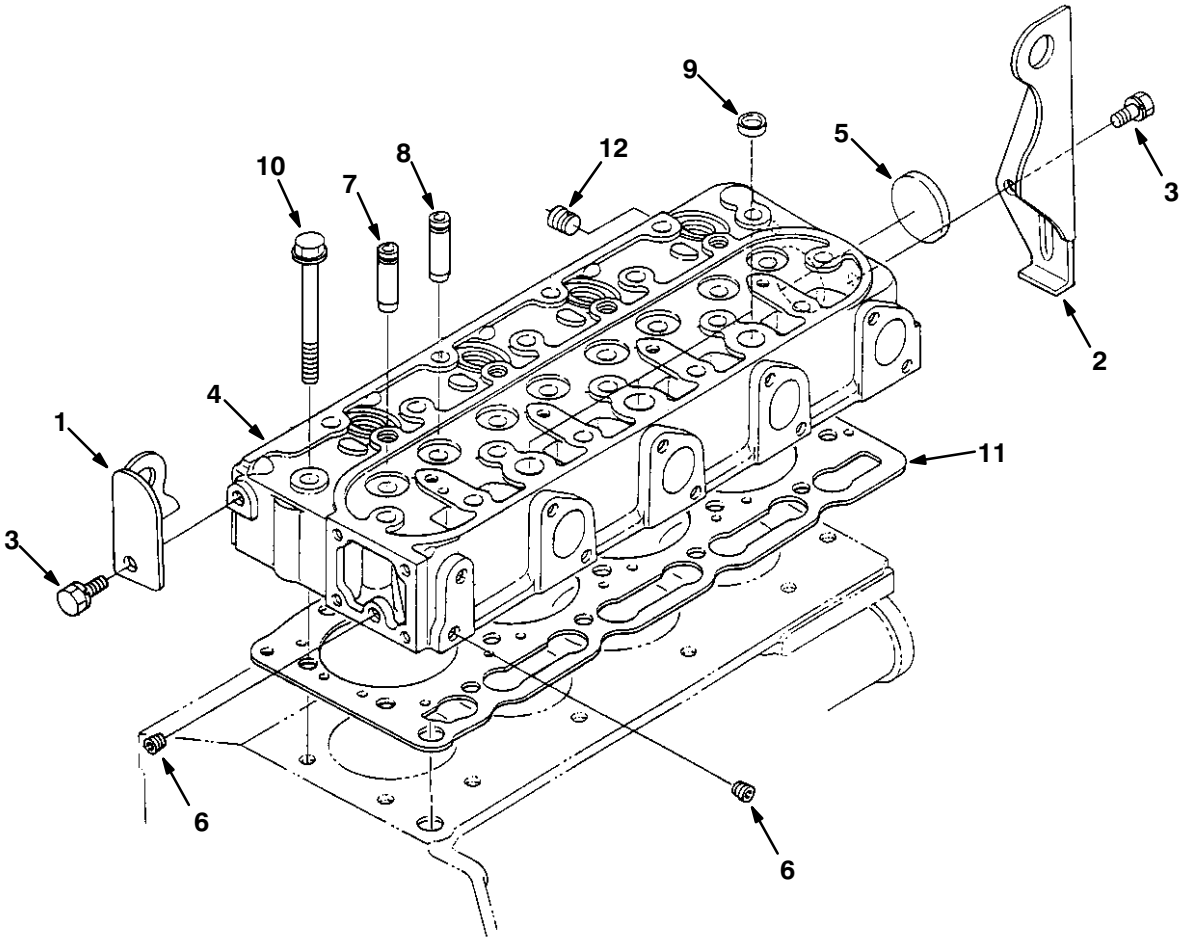

	Ref.	Part No.	Description	Qty.
	1	71996	Ear, Lifting, Eng [Ku]	1
	2	71997	Ear, Lifting, Eng [Ku]	1
	3	39073	Screw, Hex [Ku]	2
▽	4	9004340	Head, Cylinder [Ku]	1
▲	5	393504	Cap, Sealing	1
▲	6	39088	Fitting, Pipe, Plug [Ku]	2
▲	7	372906	Guide, Valve, Inlet	4
▲	8	372907	Guide, Valve, Exhaust	4
▲	9	361372	Plug, Cup, Sealing [Ku]	3
	10	70897	Screw, Hex, Head, Cyl [Ku]	18
	11	9004341	Gasket, Head, Cyl [Ku]	1
		66194	Gasket Set, Upper	1
	12	72010	Fitting, Pipe, Plug [Ku]	1

Fig. 4 – Gear Case Group

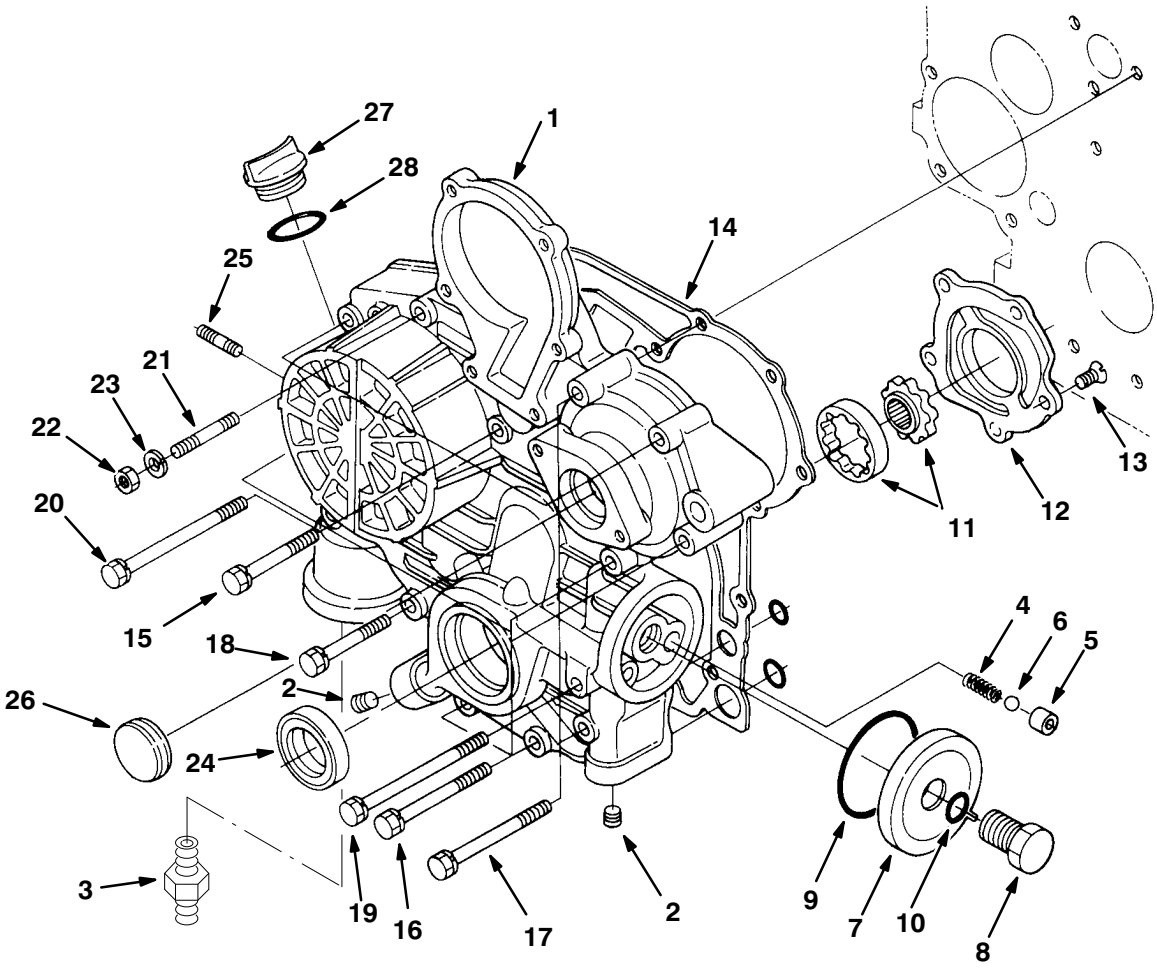

Fig. 4 – Gear Case Group

	Ref.	Part No.	Description	Qty.
▽	1	9004432	Crankcase, Comp [Ku]	1
▲	2	361401	Fitting, Pipe, Plug [Ku]	5
▲	3	12916	Fitting, Fltr, Oil [Ku]	1
▲	4	70900	Spring, Cmpr, Relief [Ku]	1
▲	5	70901	Tube, Seat, Valve, Oil [Ku]	1
▲	6	70902	Ball, Relief, Oil [Ku]	1
▲	7	70905	Cover	1
▲	8	70906	Bolt	1
▲	9	70907	Seal, Org [Ku]	1
▲	10	70911	Seal, Org	1
▲	11	70903	Pump, Oil, Eng [Ku]	1
▲	12	70904	Cover, Pump, Oil	1
	13	72013	Screw, Flt [Ku]	5
	14	70912	Gasket, Case, Gear [Ku]	1
	15	72993	Screw, Hex [Ku]	3
	16	384872	Bolt	4
	17	72994	Screw, Hex [Ku]	2
	18	72014	Screw, Hex [Ku]	1
	19	72015	Screw, Hex [Ku]	2
	20	72016	Bolt	1
	21	9004346	Stud [Ku]	1
	22	39121	Nut, Hex [Ku]	1
	23	39065	Washer, Lock, Split [Ku]	1
	24	361389	Seal, Oil, Front [Ku]	1
	25	9004347	Stud [Ku]	2
	26	72019	Cover	1
	27	361374	Cap, Filler, Oil [Ku]	1
	28	70913	Seal, Org	1

Fig. 5 – Water Pump Group

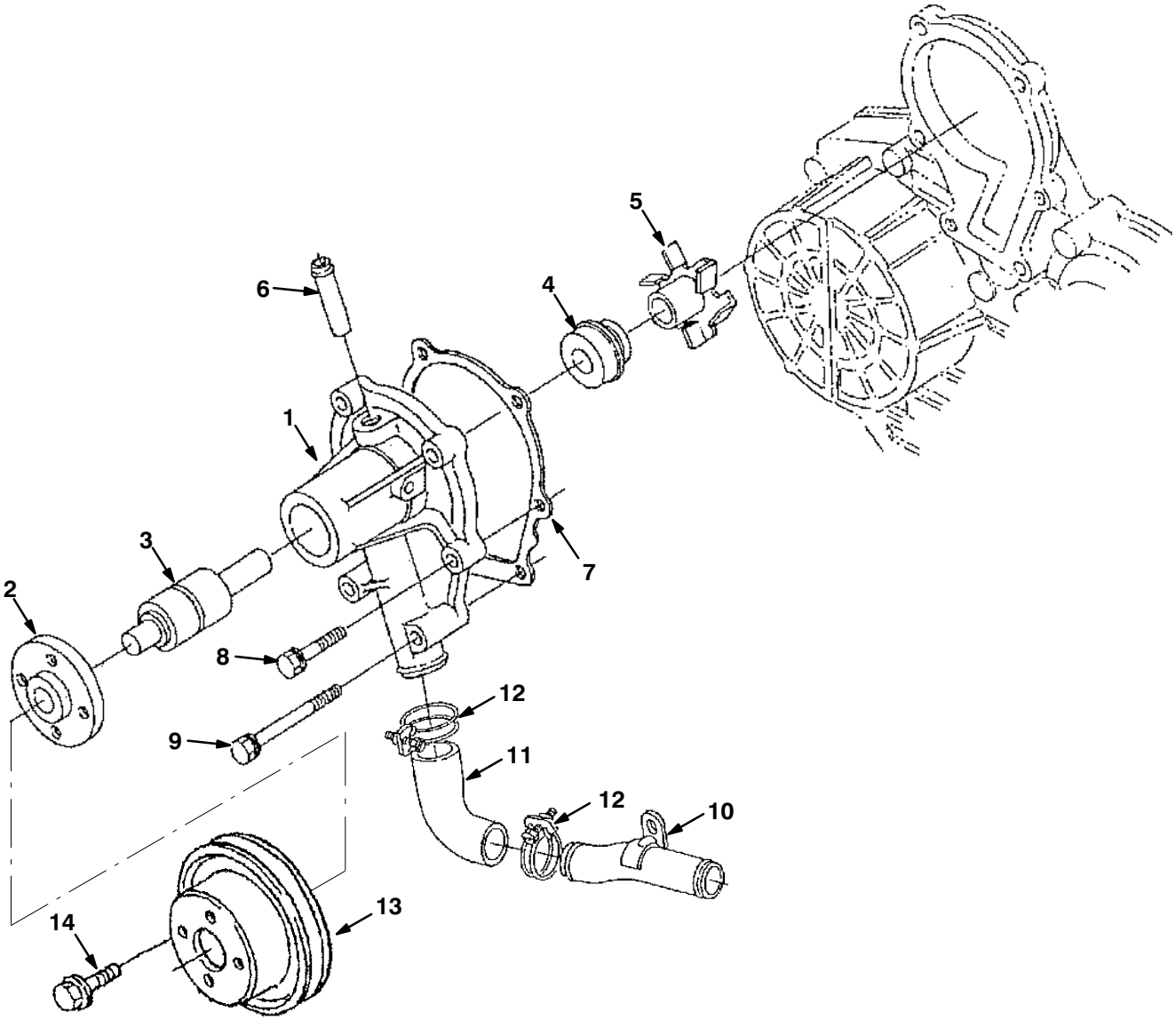

	Ref.	Part No.	Description	Qty.
▽	1	9004402	Pump, Water Assy [Ku]	1
▲	2	70919	Flange, Pump, Water [Ku]	1
▲	3	9004403	Bearing [Ku]	1
▲	4	9004404	Seal, Mechanical Assy [Ku]	1
▲	5	9004405	Impeller, Pump, Water [Ku]	1
▲	6	361440	Fitting, Pipe, Water [Ku]	1
▲	7	70920	Gasket, Pump, Water [Ku]	1
	8	9004406	Bolt [Ku]	4
	9	9004407	Bolt [Ku]	2
	10	9003868	Pipe, Water [Kubota]	1
	11	9003869	Pipe, Water [Kubota]	1
	12	9003870	Clamp [Kubota]	2
	13	55847	Sheave, Fan [Ku]	1
	14	393588	Bolt, Flng	4

Fig. 6 – Main Bearing Case Group

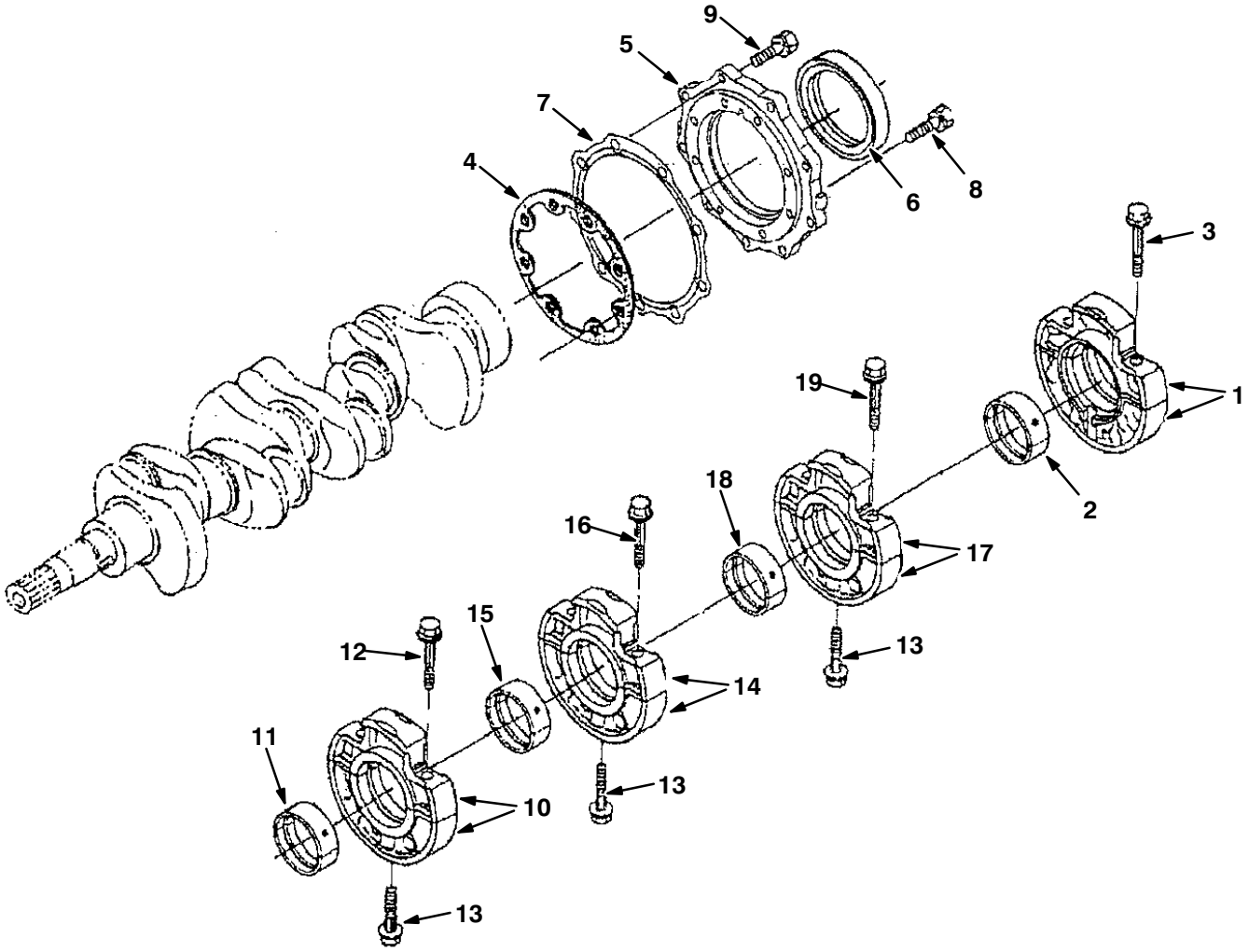

	Ref.	Part No.	Description	Qty.
▽	1	9004349	Bearing, Case [Ku]	1
▲	2	9004436	Crankshaft, Metal [Ku]	1
▲	3	72998	Screw, Hex, Case, Brg, Main [Ku]	2
	4	9004350	Gasket, Bearing, Case [Ku]	1
	5	70923	Cover, Brg Case, Eng [Ku]	1
	6	70924	Seal, Oil, Rear [Ku]	1
	7	70925	Gasket, Case, Gear [Ku]	1
	8	384871	Bolt	8
	9	371017	Bolt	9
▽	10	9004437	Case, Main, Brg Assy	1
▲	11	70948	Bearing, Cshft, Std [Ku]	1
▲	12	72998	Screw, Hex, Case, Brg, Main [Ku]	2
	13	73479	Screw, Hex, Case, Brg, Main [Ku]	3
▽	14	9004438	Case, Main, Brg Assy	1
▲	15	70948	Bearing, Cshft, Std [Ku]	1
▲	16	72998	Screw, Hex, Case, Brg, Main [Ku]	2
▽	17	9004439	Case, Main, Brg Assy	1
▲	18	70948	Bearing, Cshft, Std [Ku]	1
▲	19	72998	Screw, Hex, Case, Brg, Main [Ku]	2

Fig. 7 – Head Cover Group

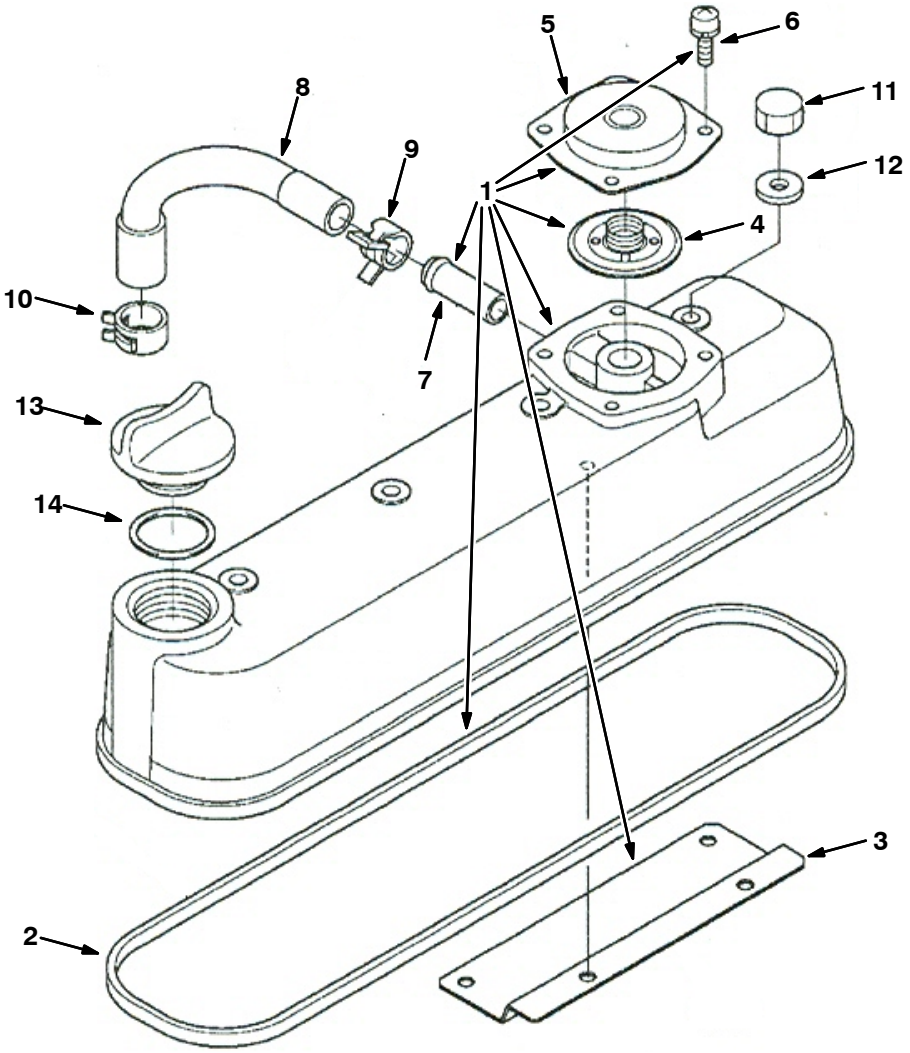

	Ref.	Part No.	Description	Qty.
▽	1	9004433	Cover, Cyl Head Assy [Ku]	1
▲	2	70929	Gasket, Cover, Head, Cyl [Ku]	1
▲	3	372912	Shield, Breather	1
▲	4	372928	Valve, Breather, Complt	1
▲	5	384874	Cover, Breather	1
▲	6	73482	Screw, Hex, W/ Washer [Ku]	4
▲	7	30125	Pipe, Water	1
	8	372913	Tube, Breather	1
	9	372901	Clamp, Hose	1
	10	372904	Clamp, Hose	1
	11	73483	Nut, Hex, Cap	4
	12	73484	Gasket, F/ Bolt [Ku]	4
	13	361374	Cap, Filler, Oil [Ku]	1
	14	70913	Seal, Org	1

Fig. 8 – Manifold Group

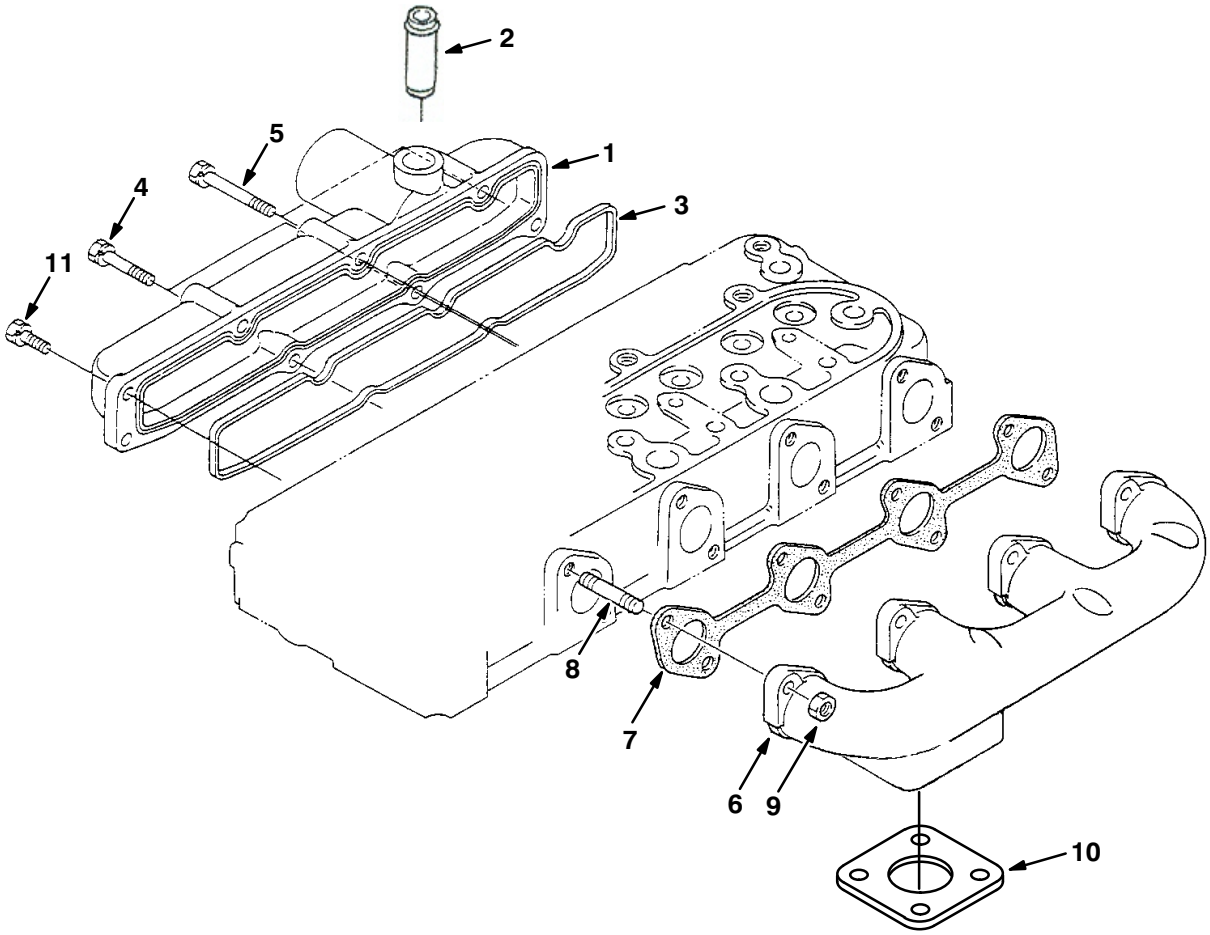

	Ref.	Part No.	Description	Qty.
▽	1	372905	Manifold Assy, Inlet	1
▲	2	73481	Pipe, Breather [Ku]	1
▲	3	70934	Gasket, Manifold, Intake [Ku]	1
	4	9004406	Bolt [Ku]	2
	5	384872	Bolt	3
	6	73487	Manifold, Exhaust [Ku]	1
	7	70935	Gasket, Manifold, Exhaust	1
	8	73488	Stud [Ku]	8
	9	73489	Nut	8
	10	51332	Gasket [Ku]	1
	11	40409	Screw, Hex [Ku]	3

Fig. 9 – Valve, Rocker Arm Group

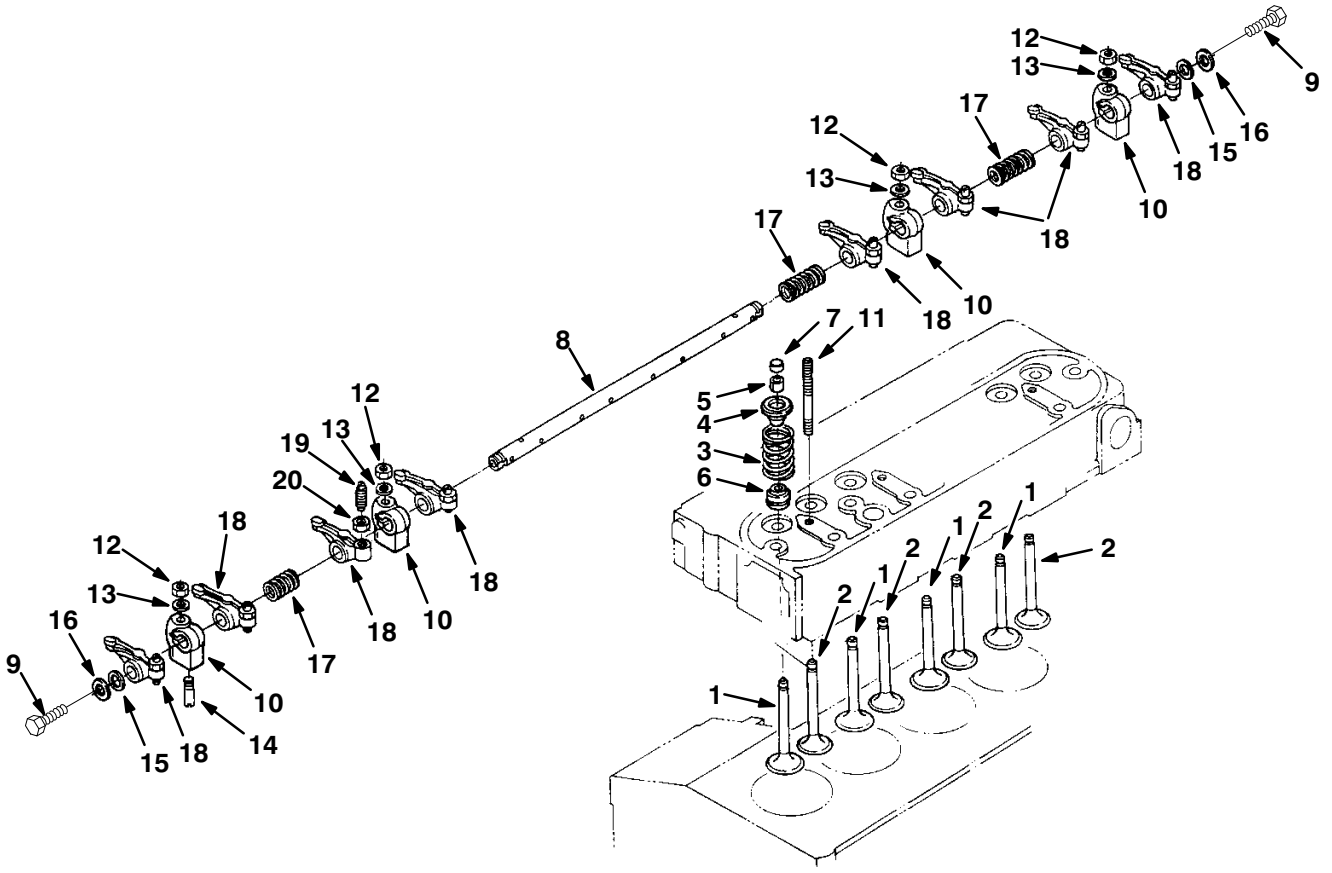

	Ref.	Part No.	Description	Qty.
	1	70936	Valve, Intake [Ku]	4
	2	70937	Valve, Exhaust [Ku]	4
	3	73491	Spring, Valve [Ku]	8
	4	73492	Retainer, Spring, Valve [Ku]	8
	5	73493	Retainer, Spring [Ku]	8
	6	73494	Seal, Stem, Valve [Ku]	8
	7	361392	Cap, Valve [Ku]	8
	8	9004409	Shaft, Rocker, Arm [Ku]	1
	9	393598	Bolt	2
	10	73497	Bracket, Mtg, Rocker Arm [Ku]	4
	11	73498	Stud [Ku]	4
	12	73499	Nut, Hex [Ku]	4
	13	73500	Washer, Flat [Ku]	4
	14	9004410	Pin, Spring [Ku]	1
	15	73502	Washer, Shaft, Rocker [Ku]	2
	16	361589	Washer, Flat [Ku]	2
	17	73504	Spring, Cmpr, Rocker [Ku]	3
▽	18	73506	Arm, Rocker [Ku]	8
▲	19	73507	Screw, Adj, Rocker Arm [Ku]	8
▲	20	73508	Nut, Hex [Ku]	8

Fig. 10 – Fuel Camshaft Group

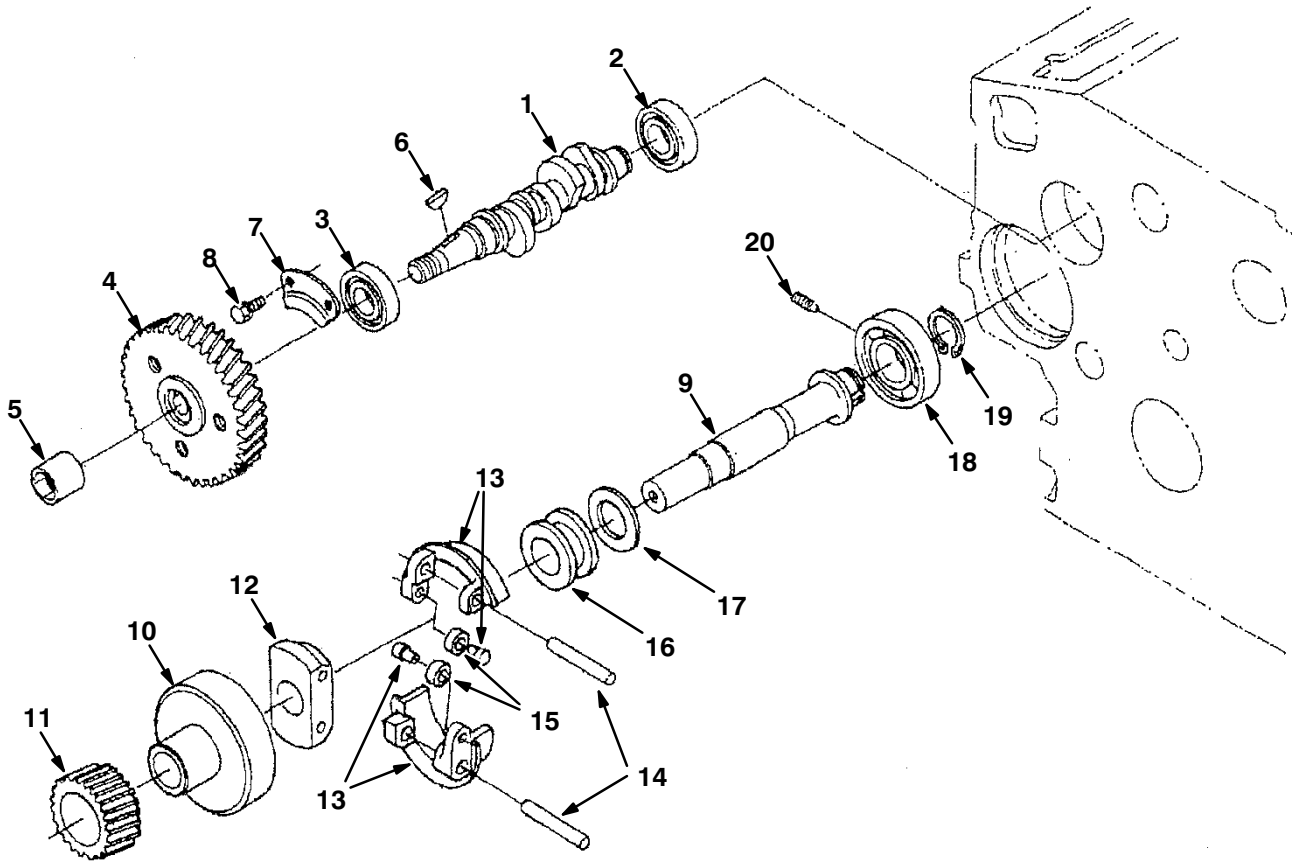

	Ref.	Part No.	Description	Qty.
	1	84636	Camshaft	1
	2	9004368	Bearing, Ball [Ku]	1
	3	9004369	Bearing, Ball [Ku]	1
	4	9004445	Gear, Injection, Pump [Ku]	1
	5	73593	Nut, Cap, Cam [Ku]	1
	6	73594	Key, Woodruff [Ku]	1
	7	73596	Stopper, Fuel [Ku]	1
	8	41973	Bolt, Hex [Ku]	2
▽		73597	Shaft, Govnr	1
▲	9	9004371	Shaft, Governor [Ku]	1
▲	10	73598	Holder, Gear [Ku]	1
▲	11	73599	Gear, Govnr [Ku]	1
▲	12	73600	Holder, Govnr [Ku]	1
▲	13	73601	Weight, Comp, Govnr [Ku]	2
▲	14	73602	Shaft, Govnr [Ku]	2
▲	15	9004372	Shaft, Governor, Weight [Ku]	2
▲	16	70977	Sleeve, Govnr [Ku]	1
▲	17	70978	Washer, Thrust [Ku]	1
	18	9004373	Bearing, Ball [Ku]	1
	19	73603	Ring, Snap [Ku]	1
	20	73604	Screw, Set [Ku]	1

Fig. 11 – Camshaft Group

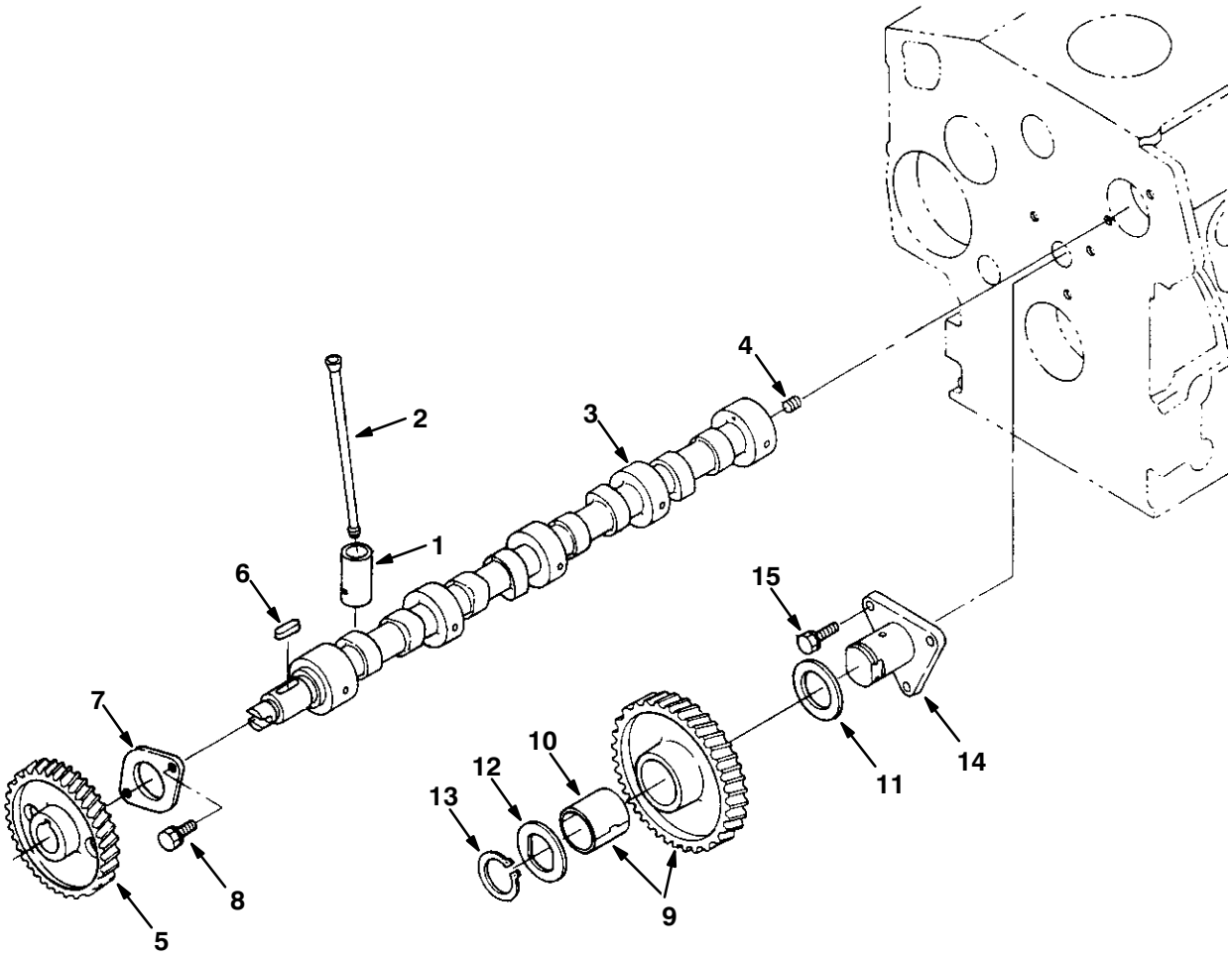

Fig. 11 – Camshaft Group

	Ref.	Part No.	Description	Qty.
	1	9004358	Tappet [Ku]	8
	2	73509	Rod, Push, Valve [Ku]	8
▽	3	9004440	Crankshaft Assy	1
▲	4	39197	Screw, Set [Ku]	1
▲	5	73511	Gear, Camshaft [Ku]	1
▲	6	73512	Key [Ku]	1
▲	7	73513	Stopper, Cam [Ku]	1
▲	8	41973	Bolt, Hex [Ku]	2
▽	9	73514	Gear, Idler, Cam [Ku]	1
▲	10	73515	Bushing, Gear, Idler [Ku]	1
	11	73516	Collar, Gear [Ku]	1
	12	73517	Washer, Collar, Gear [Ku]	1
	13	73518	Ring, Snap [Ku]	1
	14	73519	Shaft, Idler, Gear [Ku]	1
	15	41973	Bolt, Hex [Ku]	3

Fig. 12 – Piston and Crankshaft Group

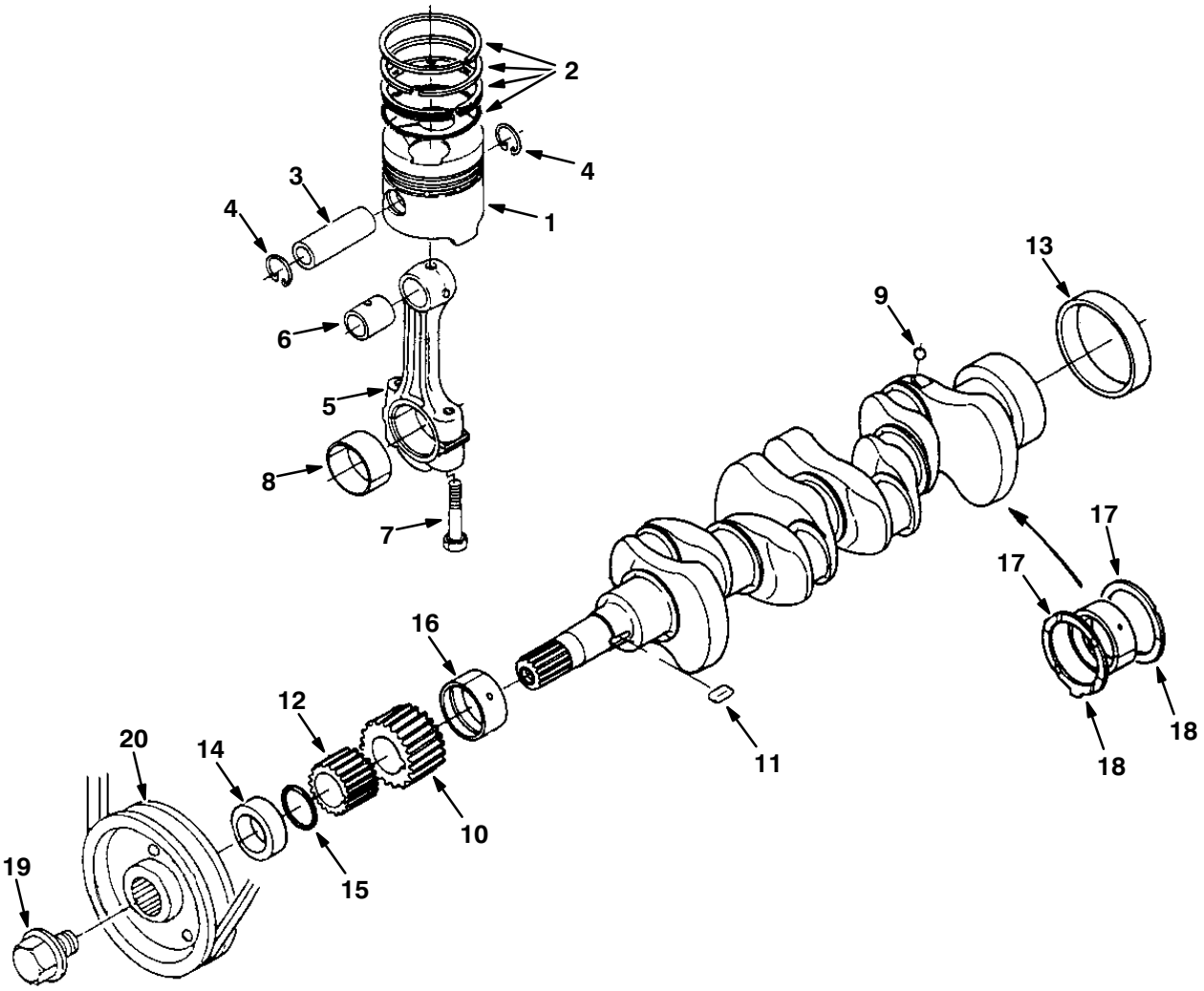

Fig. 12 – Piston and Crankshaft Group

	Ref.	Part No.	Description	Qty.
	1	73520	Piston, Eng [Ku]	4
	1	73521	Piston, Eng [Ku]	4
	2	9004361	Ring, Piston Assy [Ku]	4
	2	9004441	Piston, Ring Assy [Ku]	4
	3	73522	Pin, Piston [Ku]	4
	4	73523	Ring, Snap, Piston [Ku]	8
▽	5	73524	Rod Assy, Connecting [Ku]	4
▲	6	361395	Bushing, Pin, Piston [Ku]16241–21351	4
▲	7	73525	Screw, Rod, Connecting [Ku]	8
▲	8	70941	Bearing, Rod, Connecting, Std [Ku]	4
▲	8	66204	Bearing, Rod, Connecting [–.2mm, Ku]	4
▲	8	66207	Bearing, Rod, Connecting [–.4mm, Ku]	4
▽		73526	Crankshaft	1
▲	9	73527	Ball, Cshft [Ku]	4
▲	10	73528	Gear, Cshft [Ku]	1
▲	11	73529	Key [Ku]	1
▲	12	73530	Gear, Pump, Oil [Ku]	1
▲	13	70942	Bearing, Cshft [Ku]	1
	14	70943	Collar, Crank, Front [Ku]	1
	15	9004363	Ring [Ku]	1
	16	70945	Bearing, Cshft, Std [Ku]	1
	16	70946	Bearing, Cshft, –.2mm [Ku]	1
	16	70947	Bearing, Cshft [Ku]	1
	17	10844	Bearing, Thrust, Std [Ku]	2
	17	70954	Bearing, Thrust [Ku]	2
	17	70955	Bearing, Thrust [–.4mm, Ku]	2
	18	10845	Bearing, Thrust, Std [Ku]	2
	19	73532	Screw, Hex, Cshft [Ku]	2
	20	393400	Sheave, Cshft [Ku]	2

Fig. 13 – Flywheel Group

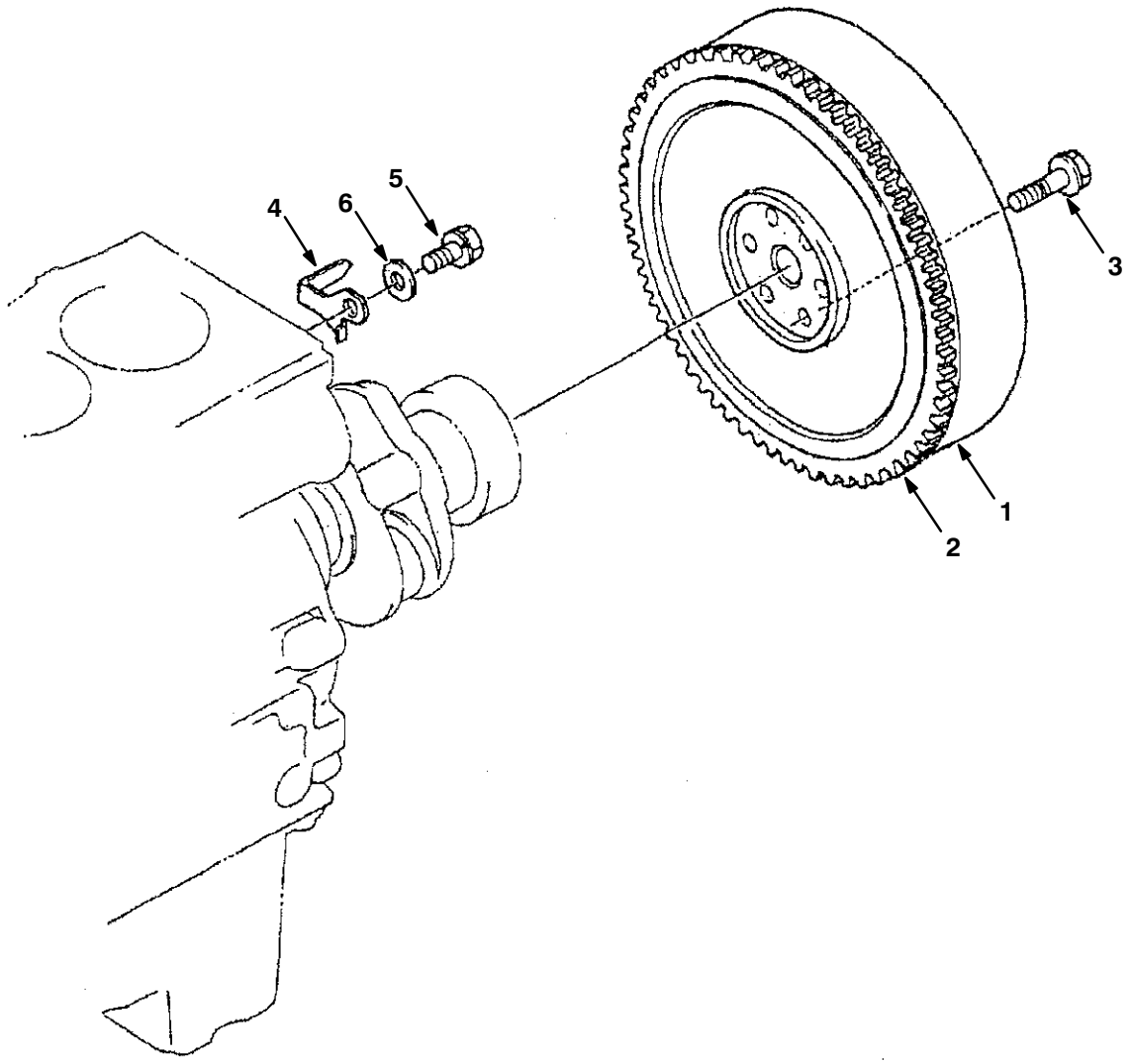

	Ref.	Part No.	Description	Qty.
▽	1	70956	Flywheel	1
▲	2	9004442	Gear, Ring [Ku]	1
	3	73533	Screw, Hex, Flywheel [Ku]	6
	4	9003891	Indicator, Timing [Ku]	1
	5	9004443	Bolt [Ku]	1
	6	9004444	Washer, Plain [Ku]	1

Fig. 14 – Starter Breakdown, 74405

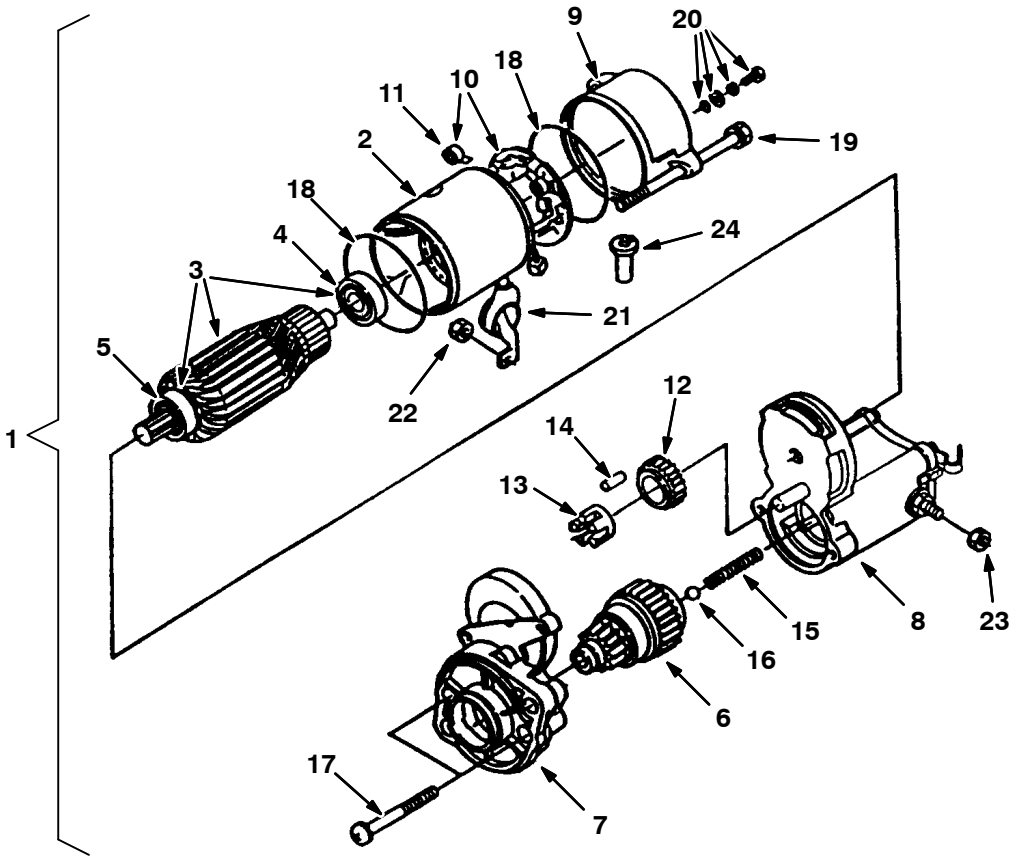

	Ref.	Part No.	Description	Qty.
▽	1	74405	Starter, 12vdc [Kubota]	1
▲	2	70196	Yoke	1
▲▽	3	70197	Armature, Motor [Ku]	1
▲▲	4	70198	Bearing	1
▲▲	5	70199	Bearing	1
▲	6	70200	Clutch	1
▲	7	70201	Frame, End, Drive	1
▲	8	70202	Switch, Magneto [Ku]	1
▲	9	70203	Frame, End	1
▲▽	10	70204	Brushholder	1
▲▲	11	70205	Spring, Brush	4
▲	12	70206	Gear	1
▲	13	70207	Retainer	1
▲	14	73545	Retainer, Gear, Starter [Ku]	5
▲	15	70208	Spring	1
▲	16	73547	Spring, Ext [Ku]	1
▲	17	70209	Bolt	2
▲	18	20433	Seal, Org	2
▲	19	70210	Bolt	2
▲	20	20432	Bolt	2
▲	21	70211	Cover	1
▲	22	73551	Nut, Hex [Ku]	1
▲	23	70212	Nut	1
▲	24	70213	Tube, Drain, Starter	1

Fig. 15 – Nozzle Holder and Glow Plug Group

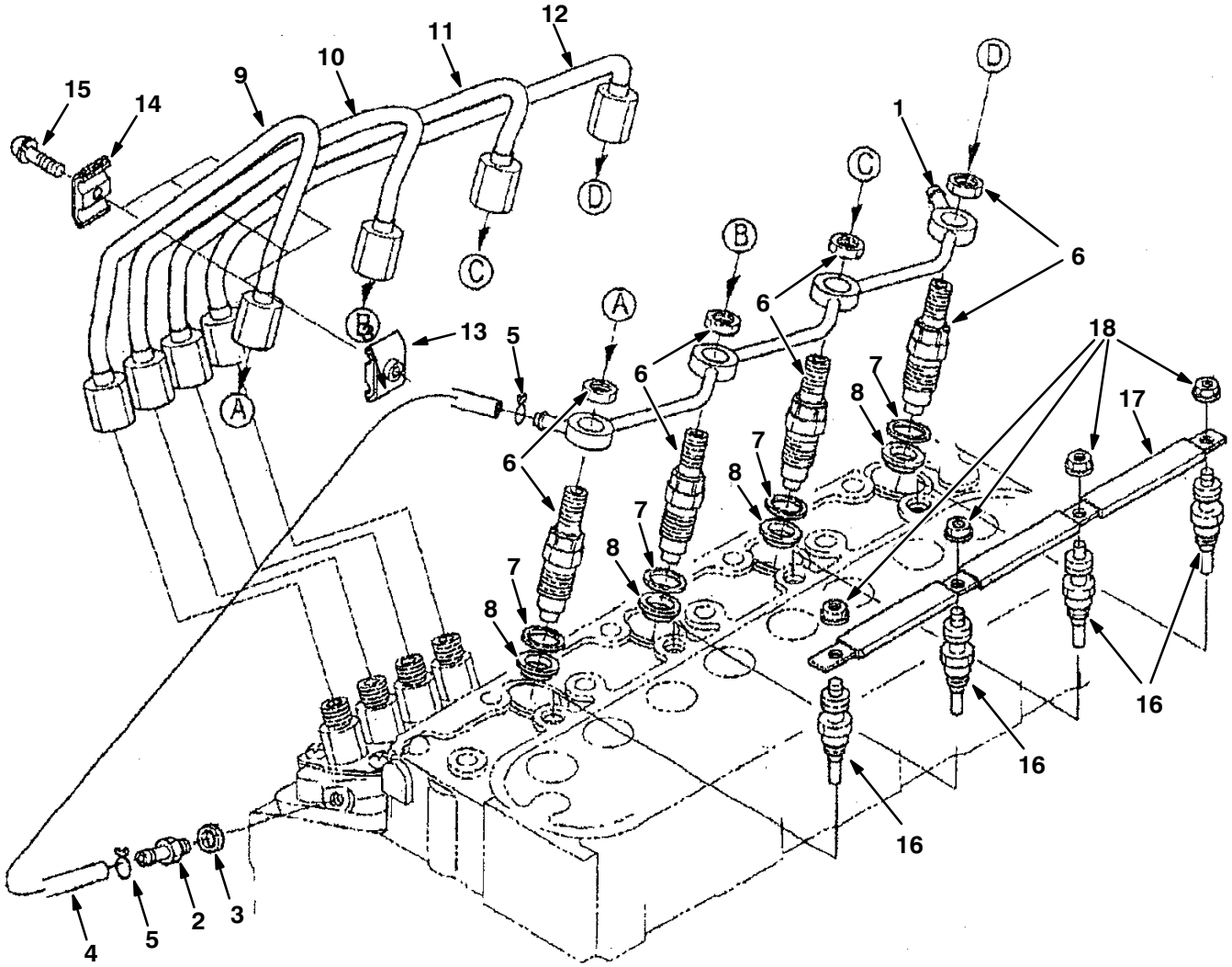

	Ref.	Part No.	Description	Qty.
	1	73554	Pipe, Overflow	1
	2	73555	Fitting, Fuel [Ku]	1
	3	40166	Gasket, F/ Bolt [Ku]	1
▽		361373	Hose, Fuel [Ku]	1
▲	4	9004389	Pipe, Fuel, Overflow [Ku]	2
▲	5	9004390	Pipe, Clip [Ku]	4
▽	6	372917	Housing Assy, Nozzle	1
▲	7	9004450	Gasket [Ku]	1
▲	8	9004451	Seal, Heat [Ku]	1
	9	70965	Tube, Injector, Pipe #1 [Ku]	1
	10	70966	Tube, Injector, Pipe #2 [Ku]	1
	11	70967	Tube, Injector, Pipe #32 [Ku]	1
	12	70968	Pipe, Injector, # 4	3
	13	30131	Clamp, Tube, Inj, Pipe #1 [Ku]	3
	14	39507	Clamp, Pipe	4
	15	393566	Screw, W / Washer	1
	16	84638	Glowplug [Ku]	3
	17	73560	Cord, Ele, Glowplug	3
	18	9004393	Nut, Flange [Ku]	3

Fig. 16 – Nozzle Holder Breakdown

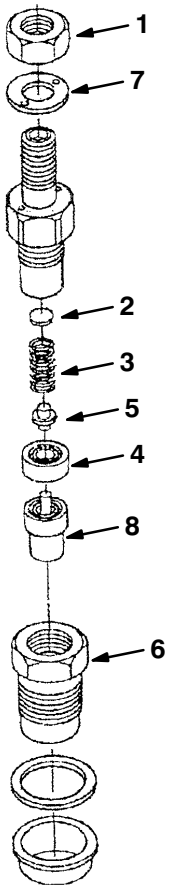

	Ref.	Part No.	Description	Qty.
▽		372917	Housing Assy, Nozzle	4
▲	1	9004395	Nut [Ku]	1
▲	2	9004396	Washer, Adjusting [Ku]	1
▲	3	9004397	Nozzle, Spring [Ku]	1
▲	4	388500	Spacer [Ku]	1
▲	5	9004398	Rod, Push [Ku]	1
	6	9004399	Nut, Nozzle [Ku]	1
	7	9004400	Washer, Plain [Ku]	1
	8	9004401	Nozzle [Ku]	1

Fig. 17 – Injection Pump Group

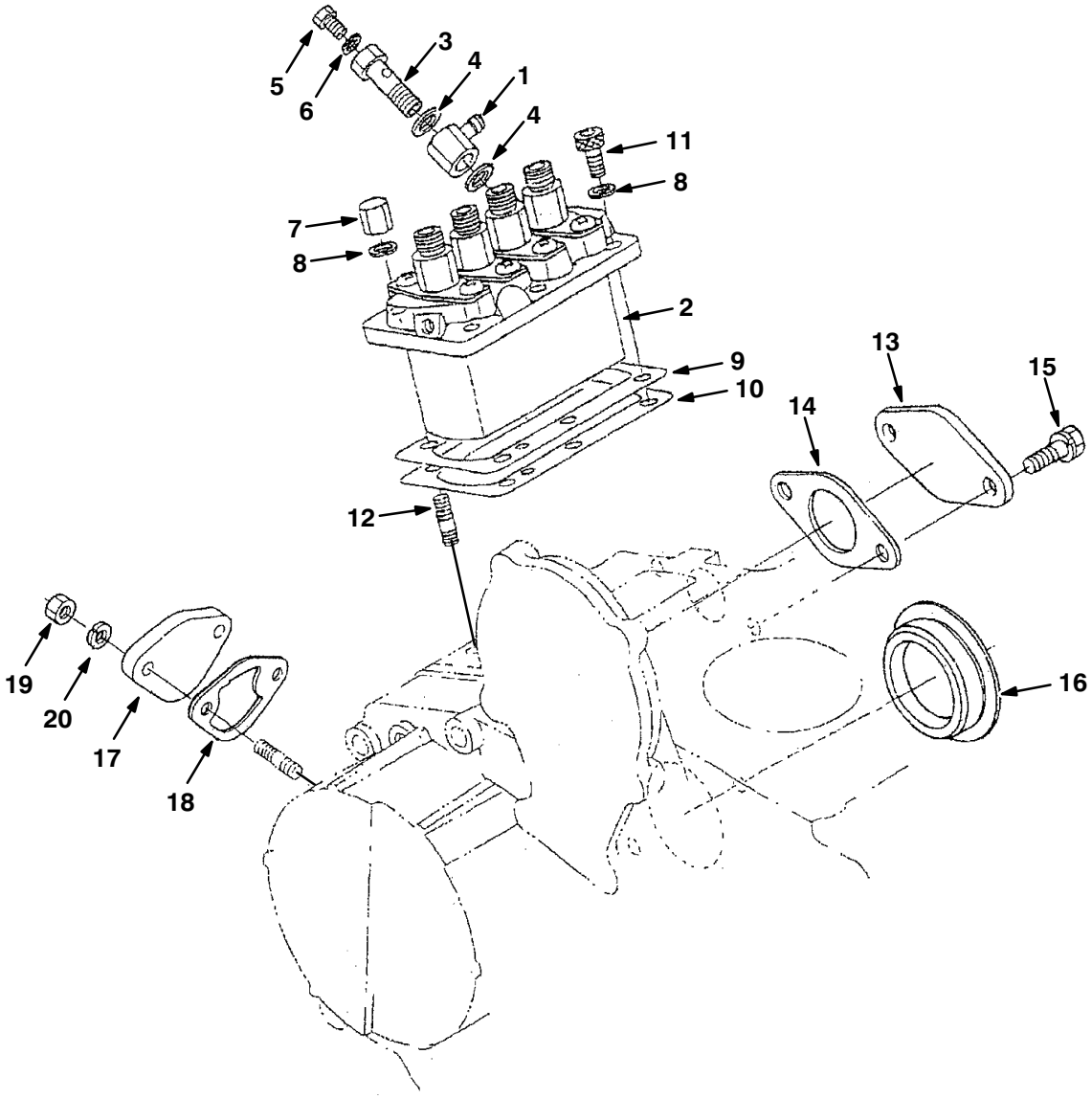

Fig. 17 – Injection Pump Group

	Ref.	Part No.	Description	Qty.
	1	9004376	Eye, Joint [Ku]	1
▽	2	84635	Pump, Injection [Kubo]	1
▲	3	84651	Follower, Screw, Pump, Injection[Ku]	1
▲	4	73588	Gasket, Ftg, Banjo [Ku]	2
▲	5	73589	Screw, Hex [Ku]	1
▲	6	73590	Gasket, F/ Screw [Ku]	1
	7	73563	Nut [Ku]	3
	8	39065	Washer, Lock, Split [Ku]	6
	9	70972	Shim	1
	9	70973	Shim	1
	10	84644	Shim, Pump, Injection	1
	11	73561	Bolt [Ku]	3
	12	73562	Stud [Ku]	3
	13	9004454	Cover, Solenoid [Ku]	1
	14	70165	Gasket, Solenoid, Throttle [Ku]	1
	15	39160	Bolt, Hex [Ku]	2
	16	70188	Cover, Hole, Pump [Ku]	1
	17	73565	Cover, Hole, Pump, Fuel [Ku]	1
	18	70974	Gasket, Pump, Fuel [Ku]	1
	19	39121	Nut, Hex [Ku]	2
	20	39065	Washer, Lock, Split [Ku]	2

Fig. 18 – Injection Pump Breakdown

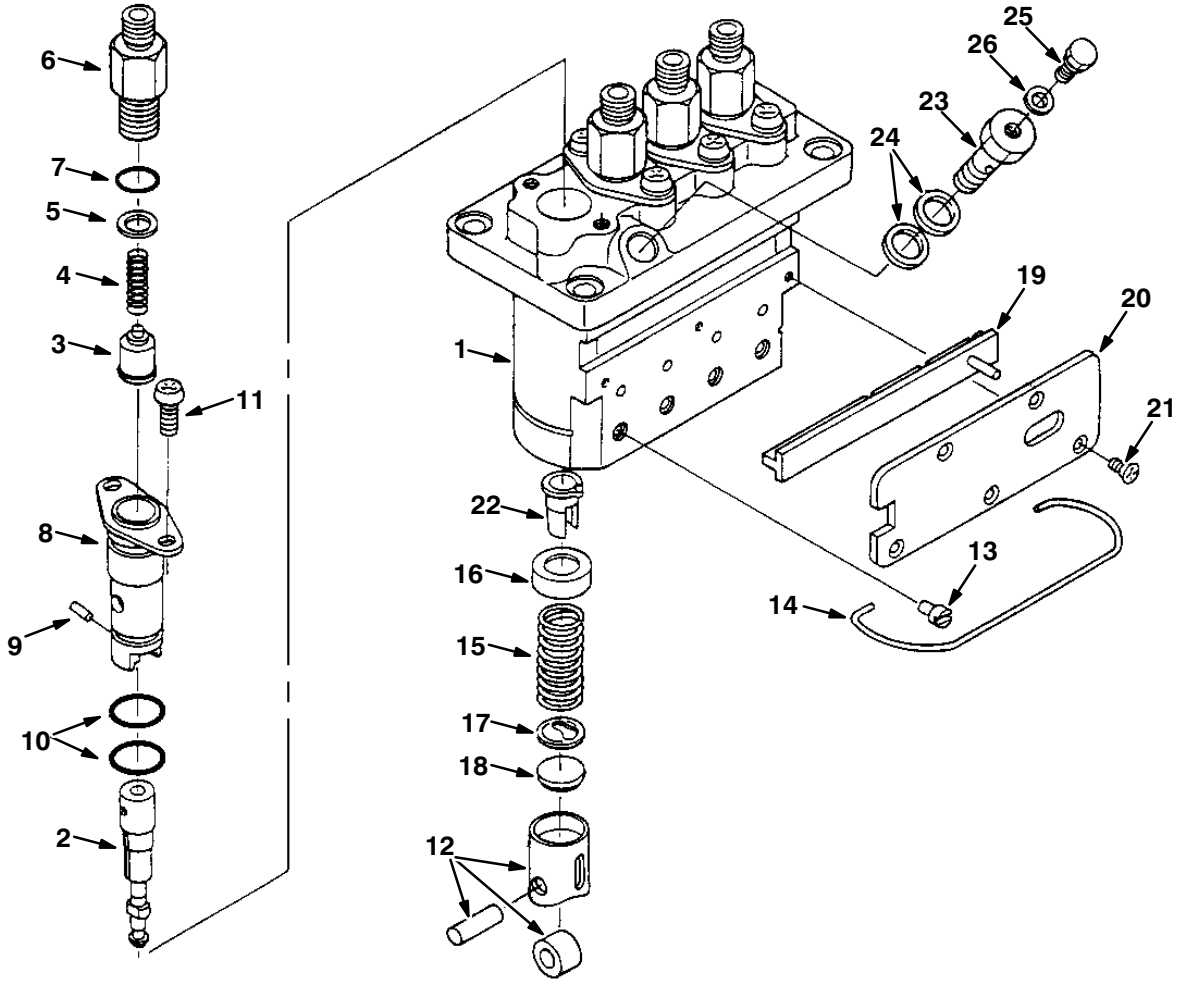

Fig. 18 – Injection Pump Breakdown

	Ref.	Part No.	Description	Qty.
▽	1	84635	Pump, Injection [Kubo]	1
▲	2	84648	Plunger, Pump, Inj [Ku]	4
▲	3	73567	Valve, Eng [Delivery, Ku]	4
▲	4	73568	Spring, Cmpr, Valve, Injector [Ku]	4
▲	5	73569	Gasket, Valve, Injector [Ku]	4
▲	6	73570	Holder, Valve, Inj [Ku]	4
▲	7	73571	Seal, Org [Ku]	4
▲	8	73572	Flange, Sleeve [Ku]	4
▲	9	73573	Pin, Joint, Inj [Ku]	4
▲	10	73574	Seal, Org [Ku]	8
▲	11	73575	Screw, Hex [Ku]	8
▲	12	73576	Tappet, Pump, Injection [Ku]	4
▲	13	73577	Pin, Tappet [Ku]	4
▲	14	73578	Pin, Clamp	1
▲	15	73579	Spring, Cmpr, Plunger [Ku]	4
▲	16	73580	Seat, Spring, Upper, Injector [Ku]	4
▲	17	73581	Seat, Spring, Lower, Injector [Ku]	4
▲	18	73582	Shim, Tappet, Injection [Ku]	1
▲	19	84649	Control, Fuel	1
▲	20	84650	Plate	1
▲	21	73585	Screw, Pump, Injection [Ku]	5
▲	22	73586	Sleeve, Cntrl, Pump, Injection [Ku]	4
▲	23	84651	Follower, Screw, Pump, Injection[Ku]	1
▲	24	73588	Gasket, Ftg, Banjo [Ku]	2
▲	25	73589	Screw, Hex [Ku]	1
▲	26	73590	Gasket, F/ Screw [Ku]	1

Fig. 19 – Idling Group

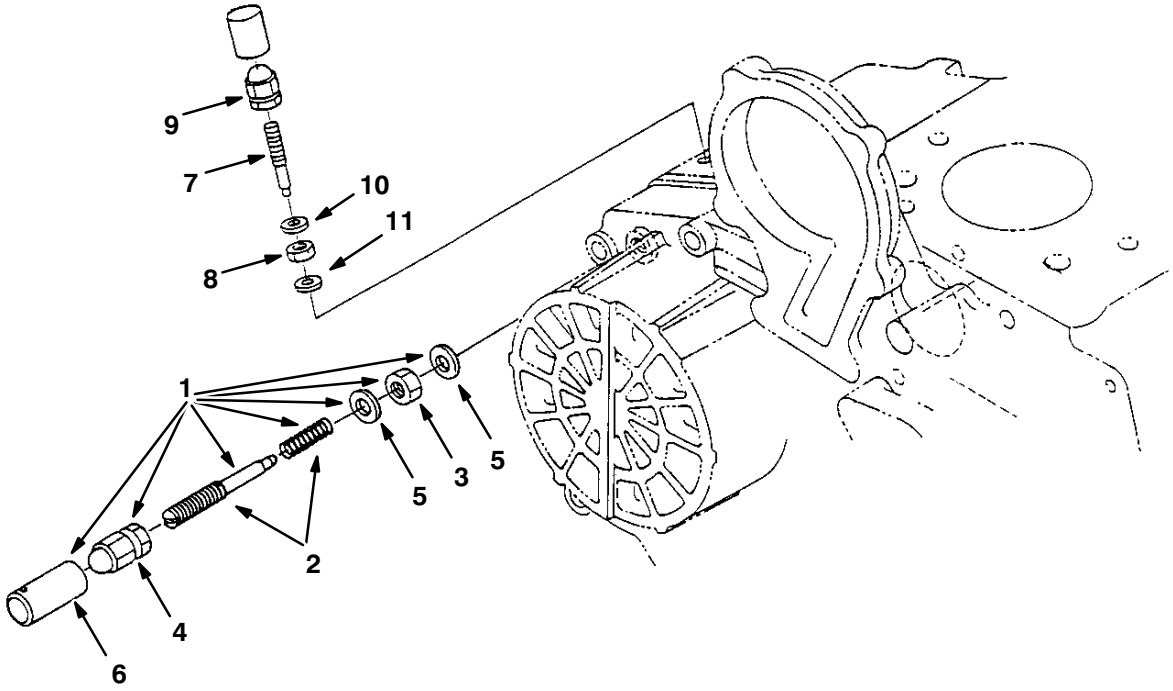

	Ref.	Part No.	Description	Qty.
▽	1	9004446	Idling, Apparatus [Ku]	1
▲	2	9004447	Bolt, Adjustment Assy [Ku]	1
▲	3	73606	Nut, Hex [Ku]	1
▲	4	361375	Nut, Cap [Ku]	1
▲	5	40166	Gasket, F/ Bolt [Ku]	2
▲	6	30136	Cap, Screw, Idler [Ku]	1
	7	73610	Screw, Adj, Stop [Ku]	1
	8	9004374	Nut, Lock [Ku]	1
	9	361375	Nut, Cap [Ku]	1
	10	40166	Gasket, F/ Bolt [Ku]	2
	11	9004375	Gasket [Ku]	1

Fig. 20 – Speed Control Plate Group

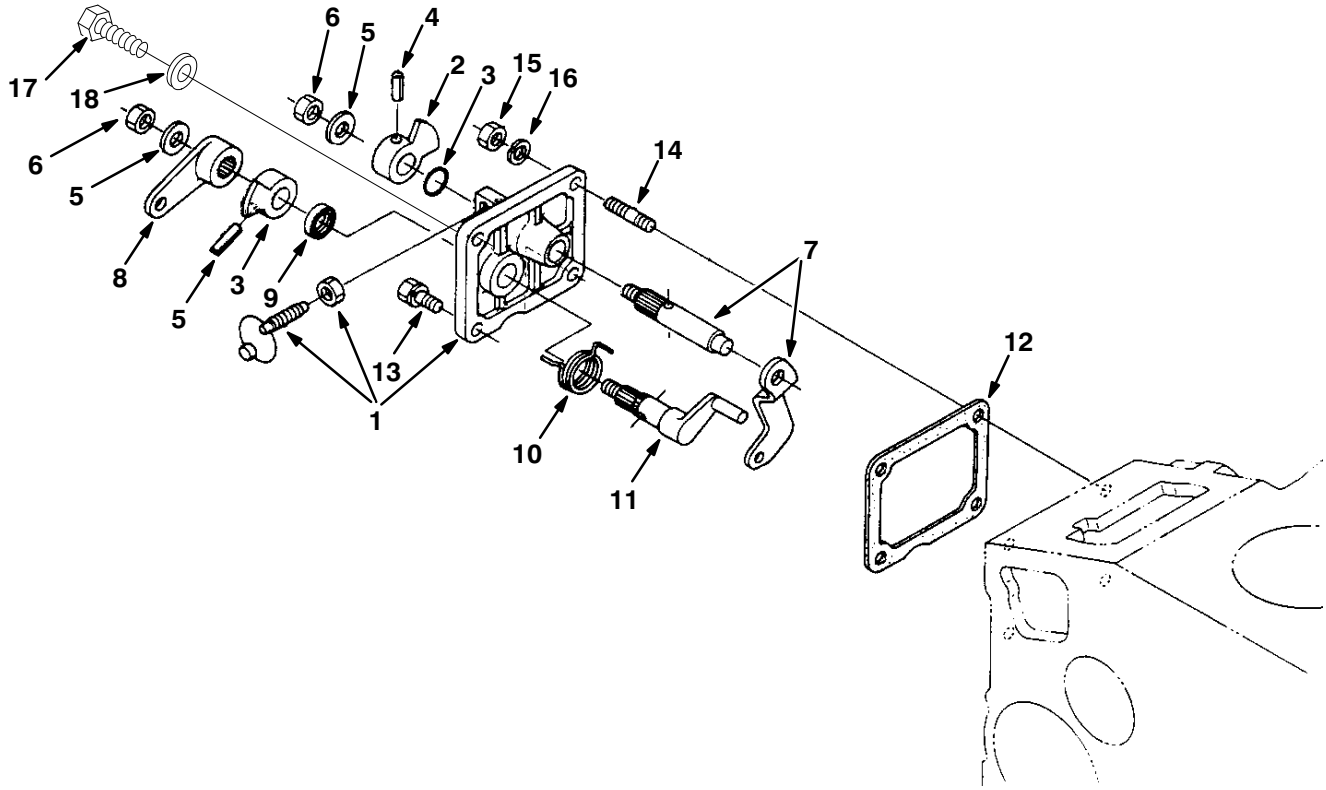

07445 – M20, D

	Ref.	Part No.	Description	Qty.
▽	1	70982	Plate, Cntrl, Spd [Ku]	1
▲	2	73619	Lever, Cntrl, Spd [Ku]	2
▲	3	9004385	O–Ring [Ku]	1
▲	4	40407	Pin, Spring [Ku]	2
▲	5	73621	Washer, Flat [Ku]	2
▲	6	73622	Nut, Hex [Ku]	2
▲	7	73623	Lever, Plate, Cntrl [Ku]	1
▲	8	73624	Lever, Stop [Ku]	1
▲	9	70983	Seal, Oil [Ku]	1
▲	10	73625	Spring, Tors [Ku]	1
▲	11	73626	Shaft, Lever, Spd [Ku]	1
	12	70984	Gasket, Cover, Spd [Ku]	1
	13	41973	Bolt, Hex [Ku]	2
	14	9004386	Stud [Ku]	2
	15	39121	Nut, Hex [Ku]	2
	16	39065	Washer, Lock, Split [Ku]	2
	17	9004449	Bolt [Ku]	1
	18	40166	Gasket, F/ Bolt [Ku]	1

Fig. 21 – Governor Group

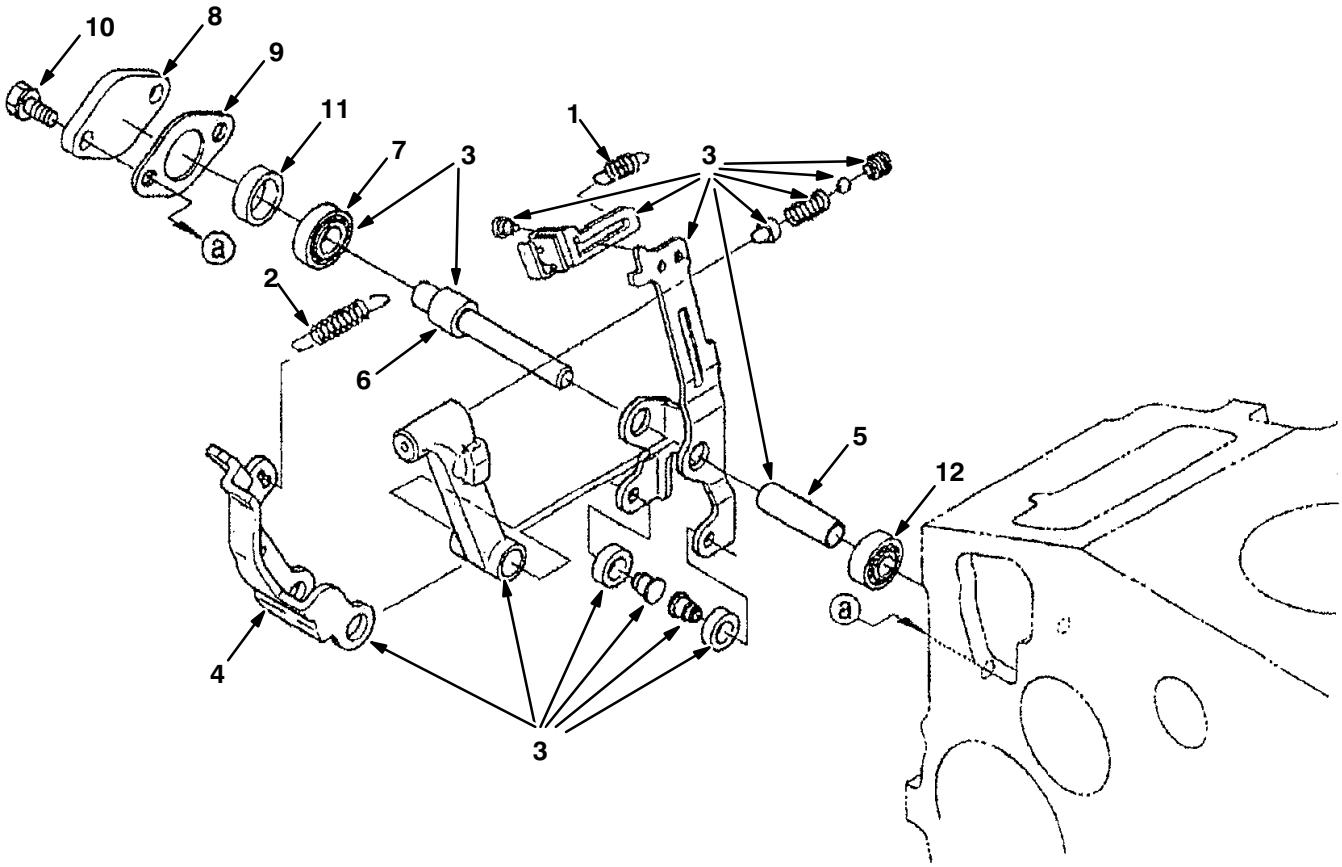

07447 – M20, D

	Ref.	Part No.	Description	Qty.
	1	9004379	Spring, Start [Ku]	1
	2	9004448	Spring, Governor [Ku]	1
▽	3	9004775	Lever Assy, Fork [KU]	1
▲	4	9004381	Lever, Fork [Ku]	1
▲	5	9004382	Lever, Fork, Shaft [Ku]	1
▲	6	9004283	Belt Kit, W/ Installation Tool	1
▲	7	70989	Bearing, Ball [Ku]	1
	8	73631	Cover, Lever, Gov [Ku]	1
	9	361430	Gasket, Cover, Gov [Ku]	1
	10	71995	Screw, Hex [Ku]	2
	11	70991	Collar, Govnr [Ku]	1
	12	70992	Bearing, Ball [Ku]	1

Fig. 22 – Water Flange Group

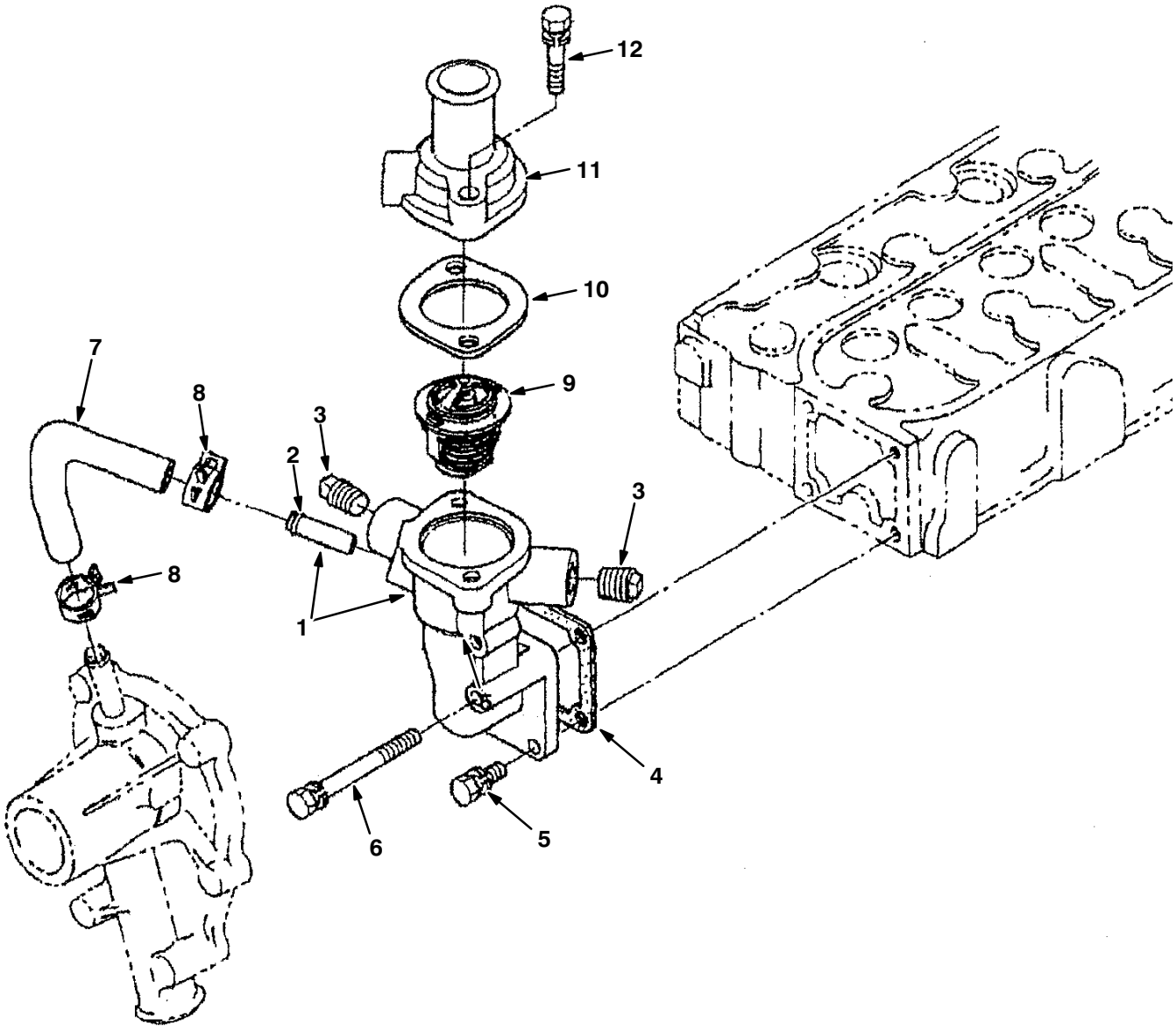

	Ref.	Part No.	Description	Qty.
▽	1	368090	Flange, Water [Ku]	1
▲	2	384859	Pipe, Water, Return	1
	3	73632	Fitting, Pipe, Plug [Ku]	2
	4	70994	Gasket, Hsg, Thermostat [Ku]	1
	5	41973	Bolt, Hex [Ku]	3
	6	384872	Bolt	1
	7	73633	Hose, Water [Ku]	1
	8	73634	Clamp, Hose, Heater [Ku]	2
	9	10852	Thermostat, 180deg, 1.7d [Ku]	1
	10	10851	Gasket	1
	11	368091	Housing, Thermostat [Ku]	1
	12	40418	Bolt [Ku]	2

SECTION 7

CONTENTS **PAGE**

PART NUMBER TO PAGE NUMBER CROSS REFERENCE LIST 7-2
PART DESCRIPTION TO PAGE NUMBER CROSS REFERENCE LIST 7-15

PART NUMBER TO PAGE NUMBER CROSS REFERENCE LIST

Part Number	Page Number
IB3614	4-10
00500-15	4-8, 4-9
00927	2-69, 2-71
00954	2-103
00960	2-33, 2-35
00966	4-10
01316	3-3, 3-65
01493	2-9
01681	2-17
01683	2-35, 2-55, 3-3, 3-19, 3-25, 3-29, 3-33, 3-43, 3-57, 3-65, 3-69
01684	2-5, 2-61, 2-65, 2-67, 2-75, 2-92, 2-97, 2-99, 3-29, 3-37, 3-57, 3-67
01685	2-31, 2-37, 2-39, 2-61, 2-65, 2-67, 2-75, 2-77, 2-79, 2-81, 2-85, 2-89, 2-95, 2-101, 2-105, 3-3, 3-7, 3-11
01686	2-7, 2-57, 2-77, 3-13
01714	2-53, 2-55
01754	2-61
01760	2-15
01762	2-69, 2-71, 3-7, 3-9
02430	4-26
02706	4-7
02850	2-15, 2-21, 2-39, 3-21
02931	2-81
02938	2-63, 4-29
02942	2-57
03192	3-55
03495	2-79
04414	2-9, 2-23, 2-77, 2-79
04706	2-17
04733-12	2-73
06548	2-33, 2-53
06549	2-15, 2-47, 3-37, 3-57, 3-65
06922	2-61
06927	2-21, 2-39
06928	2-63
06929	2-15
06939	3-65
06942	2-9, 2-19, 2-29, 2-33, 2-39, 2-47, 2-53
06943	2-15, 2-29, 2-31, 2-33, 2-35
06944	2-63
06947	2-29
06955	2-53, 2-95, 2-101
06957	2-61, 2-77
06960	2-17
06962	3-69
06963	2-61
06965	3-69
06966	2-23
06969	2-51, 2-73
06972	2-23
06988	2-19
07259	2-57, 2-65, 2-67, 2-73, 2-81
07299	2-23, 2-41, 2-43
07449	2-81
07514	3-19
07782	2-19
07786	2-55, 2-85, 2-89
07788	2-85, 2-89, 2-105
07789	2-57
07790	2-41, 2-43
07791	2-43, 2-83, 2-87, 2-127
07797	2-133
07805	2-75, 3-37
07810	2-65
08085	2-15
08170	2-53
08171	2-51, 2-63
08175	2-69, 2-71
08179	2-53, 2-57, 2-65, 2-67, 2-77, 3-7, 3-11
08180	2-49
08182	2-55, 2-85, 2-89
08236	2-73
08708	2-9, 2-15, 2-17, 2-19, 2-29, 2-31, 2-33, 2-35, 2-39, 2-41, 2-43, 2-47, 2-53
08709	2-7, 2-9, 2-21, 2-24, 2-27, 2-33, 2-35, 2-39, 2-45, 2-47, 2-53, 2-55, 2-85, 2-89, 2-131, 3-15
08711	2-23, 2-24, 2-51
08712	2-13, 2-37, 2-61, 2-65, 2-67, 2-75, 2-77, 2-97, 2-99, 3-57, 3-67
08713	2-31, 2-37, 2-39, 2-55, 2-59, 2-61, 2-65, 2-67, 2-69, 2-71, 2-73, 2-75, 2-77, 2-79, 2-81, 2-83, 2-85, 2-87, 2-89, 2-91, 2-95, 2-101, 2-105, 3-7, 3-13, 3-15
08714	2-59, 2-67, 2-77, 2-81
08716	2-37, 2-65, 2-67, 2-85, 2-89, 2-97, 2-99
08875	2-91, 2-92
09005	2-69, 2-71
09007	2-85, 2-89, 2-99
09010	2-55, 2-59, 2-65, 2-67, 2-69, 2-71, 2-75, 2-77, 2-91, 2-105, 3-7, 3-11, 3-15
09011	2-105
09023	2-77, 2-105
09028	2-57, 2-63, 2-73, 2-85, 2-89
09081	2-83, 2-87
09198	2-55
09200	2-15, 2-21, 2-61, 2-97, 3-19, 3-25, 3-29, 3-33, 3-67
09206	3-21, 3-37
09252	2-15, 2-55, 2-57, 3-37, 3-57
09291	2-61, 2-65, 2-67
09738	3-13, 3-69
09739	2-69, 2-71, 2-97, 3-13, 3-19, 3-25, 3-33, 3-43, 3-47, 3-49, 3-51, 3-52, 3-53, 3-67
09740	2-9, 2-15, 2-21, 2-31, 2-39, 2-61, 2-69, 2-71, 2-73, 2-75, 2-85, 2-89, 2-91, 2-95, 2-99, 2-101, 2-103, 2-105, 2-131, 2-133, 3-3, 3-5, 3-21, 3-29, 3-37, 3-47, 3-49, 3-51, 3-65
09741	2-73, 2-77
09744	2-92, 3-37, 3-67
09832	2-39, 2-41, 2-43
1002789	3-23, 3-25
1002898	3-21, 3-29
1002899	3-21, 3-29
1005086	3-23, 3-25
1005219	3-39
1005255	3-21
1005302	3-19, 3-29, 3-39
1005435	3-21, 3-29, 4-29
1005506	3-19
1005507	3-19
1005508	3-19
1005552	3-19, 3-23, 3-25, 3-29, 3-39
1006400	3-29
1006401	3-19, 3-33
1006415	3-21, 3-39
1006416	2-29, 3-29
1006447	3-19
1007482	2-39, 2-45
1008916	2-19
1010614	3-43
1010668	3-25, 3-29, 3-33, 3-43
1010684	3-19
1010836	3-19
1011403	3-29, 3-39
1011412	3-19, 3-25, 3-31, 3-33, 3-43
1011521	3-23
1011837	3-39, 3-41
1011885	3-5
1013031	2-37

Part Number	Page Number
1013902	3-21
1014082	3-21
10143	1-1, 2-47
1014563	2-39, 2-41, 2-43, 2-61, 2-65, 2-67, 2-81, 2-103, 2-107, 3-55
1014575	3-21
1014705	2-73
1014929	3-29
1014971	4-29
1014974	3-5, 3-43, 4-29
1014986	3-29
1015026	3-33, 3-43
1015032	2-97, 3-13, 3-31, 3-41
1015033	2-97, 3-5
1015041	2-39, 2-45
1015045	2-97, 3-3, 3-13, 3-31, 3-41, 3-65
1015048	3-5
1015067	3-25, 3-33
1015220	2-61
1015486	3-31, 3-33, 3-41, 3-43, 3-65
1016314	2-33, 2-35
1016354	4-29
1016463	2-65
1016827	2-29
1016837	3-3
1017022	3-21, 3-29
1017101	2-92
1017126	1-1, 2-29
1017141	2-176
1017218	2-9, 2-15, 2-21, 2-59, 2-65, 2-67, 2-91, 2-95, 2-99, 2-101, 2-103, 2-105, 2-131, 2-133, 3-5, 3-21, 3-29, 3-37, 3-47, 3-49, 3-51, 3-65
1017248	3-49, 3-52
1017250	3-51, 3-53
1017368	2-5
1017386	3-39
1017413	3-39
1017415	3-39
1017791	2-7
1017868	1-1, 2-79
1017903	2-49
1017944	2-61
1017969	2-37
1018097	3-21
1018098	3-19, 3-29
1018155	4-29
1018193	2-65
1018194	2-65
1018196	2-65
1018197	2-65
1018199	2-65
1018202	2-65
1018203	2-61
1018207	2-61
1018208	2-63
1018209	2-107
1018210	2-65
1018216	2-107
1018226	2-57
1018227	2-57
1018236	2-65, 2-67
1018237	2-65, 2-67
1018239	2-59
1018240	2-63
1018241	2-57
1018244	2-65
1018245	2-65, 2-67
1018252	2-107
1018253	2-65, 2-67
1018260	2-57
1018262	2-57
1018266	2-57
1018272	2-59
1018274	2-63
1018275	2-57
1018276	2-57
1018280	2-63
1018293	2-63
1018300	2-59
1018333	3-25
1018495	3-65
1018499	3-19, 3-65
1018549	2-165
1018776	2-15
1018780	3-21
1018883	3-19
1018884	3-19
1018936	2-131, 4-11
1018938	3-15, 4-13
1019031	2-85
1019146	2-73
1019225	2-7
1019228	2-15
1019250	3-65
1019251	2-7
1019295	1-1, 2-83, 2-87
1019424	2-95, 2-101
1019445	3-47, 3-49, 3-51
1019630	2-169
1019636	3-5
1019646	3-27
1019647	3-52, 3-53
1019950	2-171
1019968	2-41, 2-43
1019971	3-47, 3-49, 3-51
1020002	2-73
1020003	2-73
1020163	2-75
1020166	1-1, 2-75
1020168	2-9, 3-37
1020186	2-21
1020207	2-75
1020208	2-75
1020209	2-91
1020320	2-103
1020331	2-99
1020335	2-99
1020341	2-43
1020394	2-131, 4-19
1020428	2-92
1020487	2-15
1020526	3-67
1020540	2-9
1020548	2-85
1020708	2-131
1020828	2-75
1020904	2-9
1020949	2-31
1021019	2-69, 2-71
1021047	2-63
1021090	2-99
1021210	3-5, 4-3
1021265	2-17
1021290	2-47
1021325	3-3
1021327	2-7
1021404	2-81
1021419	2-99
1021439	3-11
1021473	3-11
1021497	2-81
1021511	2-79
1021546	2-81
1021564	3-11
1021579	1-1, 2-129
1021609	2-77
1021617	3-11
1021789	2-37
1021794	3-7
1021834	2-9
1021879	2-99
1021881	3-65
1021920	2-99
1021991	2-131
1022003	2-75
1022004	2-21
1022005	2-15, 2-21
1022007	1-1, 2-75
1022009	1-1, 2-75
1022031	2-53
1022069	2-19
1022105	2-15
1022106	3-13
1022111	3-7
1022113	2-37
1022135	3-7
1022137	2-95, 2-101
1022165	2-75
1022167	2-99
1022176	2-91
1022179	2-75
1022182	2-92
1022188	3-7
1022229	3-5

Part Number	Page Number
1022243	2-53
1022260	3-7
1022276	3-55
1022302	3-7
1022318	3-13
1022345	2-55
1022359	2-75
1022363	2-75
1022370	2-99
1022372	2-77
1022377	2-103
1022442	2-77
1022482	2-131
1022484	2-131
1022545	2-81
1022699	2-9
1022736	2-53
1022779	2-55
1022787	2-55
1022825	2-85, 2-89
1022831	2-79
1022846	2-83, 2-87
1022978	2-89
1023074	2-23
1023144	5-4, 6-4
1023154	2-39
1023180	2-39, 2-45
1023239	2-79
1023282	2-23
1023306	2-85
1023307	2-89
1023314	2-89
1023464	2-11
1023476	2-81
1023482	2-27
1023485	3-17
1023486	3-17
1023488	2-115
1023499	2-15
1023502	2-95, 2-101
1023545	2-129
1023569	2-11
1023606	2-117, 2-119
1023607	2-117, 2-119
1023608	2-115
1023609	2-115
1023617	2-69
1023754	2-103, 2-105
1023769	2-121
1023779	2-77
1023810	2-39
1023853	2-39, 2-45
1023879	3-55
1023892	2-31
1023911	1-1, 2-33
1023926	2-17
1023943	2-33
1024028	2-39
1024141	2-166
1024157	2-17
1024206	2-33
1024211	2-33
1024213	2-33
1024237	3-29
1024249	2-49
1024251	2-125, 4-7
1024260	2-17, 4-25
1024264	2-33
1024274	2-47
1024287	2-13
1024357	2-37
1024380	2-29
1024389	2-91
1024403	2-99
1024425	2-15
1024464	2-15
1024478	2-17
1024500	2-21
1024535	2-95, 2-101
1024558	2-95, 2-101
1024570	2-75
1024576	2-85, 2-89
1024584	2-83, 2-87
1024586	1-1, 2-83, 2-87
1024591	2-91
1024599	2-95, 2-101
1024641	2-77
1024648	2-77
1024651	2-83, 2-87
1024688	2-121, 2-123
1024695	2-17
1024703	2-77
1024764	2-121
1024772	2-31
1024853	2-103
1024891	2-103
1024977	3-69
1025005	1-1, 3-7
1025100	2-73
1025132	2-129
1025140	2-54
1025151	2-83, 2-87
1025159	3-5
1025196	2-21
1025229	2-27
1025405	3-15
1025435	2-9
1025445	3-17
1025460	2-81
1025480	2-95, 2-101
1025487	2-53
1025495	2-53
1025544	2-121
1025547	2-117
1025548	2-121
1025551	2-123
1025601	2-81
1025619	2-99
1025620	2-99
1025663	3-69
1025680	2-77
1025736	2-15
1025756	2-107
1025806	2-21
1025841	2-107
1025872	2-103
1025887	2-103
1025888	2-103
1025904	2-57
1025916	2-15
1025990	3-17
1025991	3-17
1025992	3-17
1026003	2-39
1026007	2-77
1026014	2-99
1026025	2-53
1026051	2-95, 2-101
1026067	3-21
1026074	3-19
1026080	2-69, 2-71
1026108	2-75
1026119	3-15
1026146	3-61
1026222	2-3
1026223	2-3
1026319	2-127
1026352	2-69, 2-71
1026550	2-27
1026576	2-47
1026628	2-21
1026645	2-117, 2-119
1026647	2-127
1026665	2-21
1026726	2-21
1026727	2-95
1026733	2-121
1026743	3-65, 4-27
1026759	2-27
1026825	2-15
1027007	3-65
1027039	2-101
1027099	2-39
1027103	2-39
1027112	2-39
1027218	2-9
1027228	2-47
1027233	2-55
1027237	3-65
1027267	2-9
1027273	2-23
1027290	1-1, 2-92
1027313	2-55
1027320	2-121
1027321	2-121
1027381	2-91
1027560	3-69
1027591	2-23
1027688	2-5
1027692	2-55

Part Number	Page Number
1027697	2-3
1027716	1-1, 3-7
1027719	1-1, 2-79
1027742	2-55
1027759	3-71
1027798	3-49, 3-51, 3-52, 3-53
1027800	3-49, 3-51, 3-52, 3-53
1027810	2-73
1027916	2-7
1027922	2-29
1027926	3-11
1027976	3-65
1027978	3-65
1028074	2-97
1028145	2-117
1028173	2-99
1028211	2-99
1028328	2-99
1028374	2-79
1028412	2-21
1028420	2-33
1028516	2-21
1028522	2-99
1028582	3-19
1028635	2-85, 2-89
1028667	2-33
1028690	2-95, 2-101
1028691	2-95, 2-101
1028697	3-5
1028701	2-95, 2-101
1028769	2-13
1028772	2-13
1028821	2-127
1028822	2-127
1028823	2-127
1028852	2-75
1028972	2-87
1028979	2-87
1028994	2-37
1029055	3-65
1029057	3-37, 3-65
1029082	2-29
1029118	3-21
1029128	2-83
1029132	2-83
1029153	3-65
1029155	3-65
1029156	3-65
1029185	2-97
1029362	2-13
1029379	3-7, 3-9, 4-9
1029399	3-65
1029543	3-69
1029545	2-19
1029646	2-57
1029652	2-19
1029689	2-33, 2-35
1029748	2-92
1029790	3-65
1029964	2-69, 2-71
1030017	2-9
1030404	2-115
1030441	4-32
1030444	4-32
1030511	3-25, 3-33, 3-43
1030549	3-61
1030588	2-15, 2-21
1030593	2-9
1030617	2-92
1030709	2-123
1030863	3-19
1030864	3-19
1030878	3-19
1030910	2-73
1030911	2-73
1030969	2-3
1031011	1-1, 2-83, 2-87
1031017	2-176
1031206	2-15
1031233	2-91
1031235	2-92
1031309	2-101
1031331	1-1, 2-79
1031557	2-19
1031566	2-33, 2-35
1031572	3-5
1031575	2-63
1031610	2-99
1031665	2-9, 2-13, 2-15, 2-17, 2-21
1031699	2-99, 4-3
1031796	4-27
1031797	4-27
1031798	4-27
1031799	4-27
1031800	4-27
1031801	4-27
1031802	4-27
1031803	4-27
1031823	1-1, 2-83, 2-87
1031826	2-7
1031827	2-7
1031945	1-1, 2-79
1032010	2-37
1032399	2-55
1032424	2-29
1032450	2-176
1032512	2-29
1032578	3-71
1032743	2-69, 2-71
1032812	2-27
1032830	3-55
1032831	3-55
1032869	3-67
1032896	3-67
1033156	2-21
1033297	3-21
1033591	2-61
1033624	2-169
1033688	2-39, 2-45
1033697	2-33, 2-45
1033897	2-27
1033901	2-27
1033975	2-9
1034147	2-81
1034149	2-81
1034270	2-49
1034388	2-107
1034764	2-11
1034765	2-11
1034766	2-11
1034767	2-15
1034768	2-11
1034769	2-11
1034770	2-11
1034878	2-129
1035044	2-99
1035068	2-19
1035341	2-33, 2-35
1035727	2-81
1035794	3-29
1035878	2-39
1035976	2-39
1035997	2-9
1036240	2-63
1036611	2-61
1036710	2-117, 2-119
1036801	3-29
1036844	2-35
1036847	2-35
1036859	2-35
1036892	2-13, 2-29, 2-41, 2-43
1036939	2-121
1036944	3-17
1036945	2-117, 2-119
1036946	3-17
1036959	2-127
1036965	3-17
1036997	2-97
1037011	3-15
1037032	4-29
1037042	2-123
1037053	2-123
1037235	2-61
1037346	2-7, 2-41, 2-43, 2-47, 2-63, 2-99, 2-107
1037354	2-129
1037355	2-41, 2-43
1037671	2-61
1037805	3-15, 4-15
1037809	3-35
1037816	2-99
1037825	3-25, 3-33, 3-43
1037947	2-61
1037970	2-19
1037971	2-19
1038035	2-33
1038074	2-97
1038115	2-65, 2-67, 3-11
1038123	2-67

Part Number	Page Number
1038134	2-67
1038137	2-73, 2-77, 2-85, 2-89, 3-11
1038159	4-29
1038258	2-69, 2-71
1038566	2-133, 4-21
1038569	2-115
1038805	2-91, 2-92
1038927	2-99
1038941	2-99
1039019	3-5
1039049	2-99
1039064	2-97
1039072	2-99
1039124	2-67
1039148	2-115
1039149	2-67
1039155	2-67
1039157	2-67
1039163	2-59
1039208	2-35
1039212	2-35
1039215	2-59
1039348	2-85, 2-89
1039357	3-29
1039396	2-75
1039521	2-27
1039652	2-99
1039757	2-91, 2-92
1039789	2-133
1040018	2-75
1040096	2-23
1040117	2-133
1040216	2-117
1040306	2-91
1040318	2-127, 2-129
1040467	2-17, 2-19, 2-29, 2-39, 2-41, 2-43, 2-57, 3-37, 3-57
1040524	2-3
1040628	2-121
1040634	3-67
1040655	2-117, 2-119
1040800	3-67
1040834	3-13
1040835	2-29
1040841	2-11
1040863	3-69
1040871	3-69
1040876	2-133
1041006	2-61
1041389	3-17
1041391	2-121
1041815	2-103
1041822	2-13
1041920	2-61
1041953	2-95, 2-101
1041984	2-61
1042003	2-95
1042010	2-101
1042499	2-5
1042500	2-5
1042504	2-5
1042686	2-73
1042710	4-32
1042775	2-121
1042776	2-121
1042968	3-7, 3-9
1044323	2-59
1044342	3-29
1044343	3-29
1044367	2-133
1044393	3-37
1044993	2-65, 2-67
1045272	3-15
1045316	2-39
1045433	2-41, 2-43
1045444	3-69
1045759	2-123
1045764	2-41, 2-43
1045940	2-41, 2-43
1046173	3-37
1046247	2-41
1046261	2-41
1046282	2-41
1046798	2-99
1046801	2-41
1046810	2-24
1046962	2-41, 2-43
1046976	3-9
1046980	1-1, 3-9
1046995	3-9
1047002	3-9
1047060	3-9
1047098	2-91, 2-92
1047169	2-9
1047238	1-1, 3-9
1047295	2-9
1048295AM	1-1, 2-61
1048474	2-91, 2-92
1048512	2-91, 2-92
1048955	2-15
1049242	2-61
1049254	3-29, 3-39
1049259	3-29
1049919	2-19
1050003	2-176
1050295	3-55
1050436	2-117, 2-119
1050757	2-23, 2-24
1052017	3-39
1052124	2-73
1052164	2-41, 2-43
1052175	2-41, 2-43
1052336	3-39, 4-29
1052342	2-73
1052726	3-37
1052834	2-117, 2-119
1052885	2-63
1053078	3-37
1053143	2-41
1053320	2-61
1053464	4-29
1053838	2-7, 2-63, 3-13
1054382	2-45
1054428	2-43
1054575	2-69, 2-71
1054610	2-71
1054682	2-69
1054776	4-29
1054857	2-69, 2-71
1055139	2-71
1056195	3-69
1056298	2-61
1057637	4-29
1057643	2-69, 2-71
1057707	1-1
1057708	1-1
1057710	1-1
1057711	1-1
1058699	2-43
1058730	2-43
1058732	2-43
1058935	3-39
1058963	3-37
1058996	2-17
1059091	1-1, 3-9
1059092	1-1, 3-9
1059100	2-105
1059234	4-32
1059343	2-49
1059347	2-51
1059372	3-39
1059391	3-39
1059488	2-29
1059542	2-61
1059640	2-3
1059671	2-51
1059677	3-37
1059878	4-32
1060130	2-7, 3-13
1060185	3-37
1060273	3-37
1060291	3-37
1060292	3-37
1060517	4-29
1060521	2-49
1060596	3-39
1060624	3-37
1060693	3-39
1060695	4-29
1060716	2-105
1060719	3-37
1060871	3-46
1060880	3-46
1060881	3-46
1060942	2-7
1061045	3-43
1061973	2-49
1061974	2-51

Part Number	Page Number
1062033	2-105
1062103	2-45
1062116	3-13
1062403	3-39
1062566	2-7, 2-63
1062804	3-37
1062813	2-176
10632-1	2-63
10632-12	3-57
10632-13	2-63
10632-17	3-52, 3-53
10632-19	3-19, 3-29, 3-39
10632-2	3-5
10632-4	2-63, 3-37
1064183	3-37
1064191	3-37
1064370	2-171
1064371	2-169
1064434	2-43
1064440	2-176
1064662	2-176
1065342	2-176
1065343	2-176
1066893	2-15
1067700	2-97
1068611	2-105
1068613	2-105
1068644	2-105
1068811	2-69, 2-71
1068812	3-9
1069019	1-1
1069020	1-1
1069241	3-55
1069253	3-55
1069562	2-73
1069580	3-57
1069876	3-59
1069933	2-57
1070402	3-57
1070659	3-57
1071061	2-49
1071062	3-57
1071173	2-127
1071195	2-45
1071240	2-107
1071253	2-105
1071280	3-39
1071603	2-165
1071947	3-46
1072224	2-23
1072456	2-15, 4-31
1072815	2-15
1072877	3-5
1072885	2-99
1072995	2-133, 4-23
1072997	3-15, 4-17
1073487	2-49
1074010	2-107
1074807	2-69, 2-71
1075003	2-13
10844	5-17, 6-17
10845	5-17, 6-17
10851	5-31, 6-29
10852	5-31, 6-29
10895	5-3
10917	4-27
11399	2-39, 2-45
11842	2-55
11984	3-21
1210807	2-7
1220185	2-5
1220235	2-5
1220236	2-5
1221543	2-5
12295	2-69, 2-71
12309	2-63
12317	2-7, 2-65, 2-67, 2-77, 3-13
12323	2-63, 3-37
12895	5-15
12916	6-7
13534	2-69, 2-71
13698	2-127
13904	4-11, 4-13, 4-15, 4-17, 4-19, 4-21, 4-23
13907	4-7, 4-19
140916	3-57
14432	2-31
14595-1	2-53
14605	2-53
14838	2-5
14877	3-3, 3-5, 3-19, 3-29, 3-39
150006	2-39, 2-45
150100	3-19
150525	3-21
150538	3-29
150540	3-29, 4-29
150709	3-29
150713	3-29
15331	2-19
15539	2-5
15648	2-95, 2-101
15675	2-69, 2-71, 2-95, 2-101
15678	2-61, 3-29
15687	2-23
16213	2-55
16376	2-23
16411	1-1
16412	1-1
16431	2-117, 2-119
16695	4-8, 4-9
16735	2-99, 3-11
16931	2-9, 2-15, 2-19, 2-21, 2-29, 2-37, 2-39, 2-41, 2-45, 2-49, 2-53, 2-103
16944	2-57
16953	2-33
16968	2-13
17185	2-69, 2-71, 3-19
17284	3-13
17414	2-27, 2-29
17461	2-65, 2-67, 2-73, 2-85, 2-89, 3-11
17521	2-97
17980	2-17, 2-127
19064	2-39, 2-61, 3-63
19065	2-15, 3-37
19066	2-15, 2-21, 2-33, 2-35, 2-47, 2-57, 3-37, 3-47, 3-49, 3-51, 3-52, 3-53, 3-65
19191	3-7, 3-9
19252	2-23
19310	2-23
19313	3-55
19583	2-49
20021	2-63
20170	2-53
20171	2-23
20394	2-19, 3-65
20432	5-21, 6-19
20433	5-21, 6-19
20634	2-61
20719	5-23
20778	2-47
20833	1-1, 2-81
20944	3-5
20951	3-5, 4-29
20952	3-5
21168	2-21
21196	3-69
21197	2-55
21198	2-55, 2-125, 3-61
21601	2-79, 3-9
21602	2-79
21603	2-79, 3-9
21606	2-79
21623	2-63
21657	4-26
21659	4-26
21851	2-15
21933	4-25
21934	4-25
21935	4-25
21955	4-9
21956	4-9
21958	4-9
222267	2-21, 2-91, 2-92
222268	2-59, 2-65, 2-67
222290	2-47
222375	3-43
222463	2-83, 2-87
222496	2-37, 2-69, 2-71
222505	2-37, 2-81
222516	2-95, 2-101
22290	2-17
223080	2-15
223198	2-73, 3-37

Part Number	Page Number
223470	2-73, 3-7
223599	2-13
22615	3-9
22790	4-3
23146	2-7, 2-63, 3-13
23211	2-57
23285	4-3
23498	2-95, 2-101, 2-103, 2-107
23524-1	2-77
23788	2-53
24012	2-37
24105	3-3
24196	3-43, 3-47, 3-49, 3-51, 3-52, 3-53
24199	3-57
24265	2-21, 3-3
24299	2-5
24339	2-49
24358	2-99, 4-3
24543	3-5
24544	3-3, 3-19, 3-29, 3-39
24555	2-79, 2-81, 3-9
24698	3-39
24976	2-23
25046	3-7, 3-9
25122	2-129
25312	3-70
25611	3-7, 3-9
25686	2-69, 2-71
25735	2-81, 2-83, 2-87
28854	4-9
29557	3-11
29558	3-11
29584	2-77
30121	5-17
30122	5-17
30125	5-10, 6-10
30131	5-23, 6-20
30132	5-23
30136	5-28, 6-26
30407	2-41, 2-43
31241	2-107
31354	4-8, 4-9
31375	4-8
31379	4-8
31383	4-8
31525	2-35
31543	3-33, 3-43
31613	1-1, 2-129
32126	2-49
32183	2-27, 2-63, 3-5
32483	2-15, 2-17, 2-27, 2-31, 2-33, 2-35, 2-37, 2-55, 2-61, 2-63, 2-107, 3-37
32485	2-23, 2-31, 2-33, 2-41, 2-43, 2-55, 2-73, 2-81, 2-107, 2-125
32486	2-17, 2-39, 2-51, 2-63, 3-11
32490	2-9, 2-29, 2-33, 2-39, 2-41, 2-43, 2-47, 2-53, 2-55, 3-19, 3-21
32491	2-7, 2-9, 2-15, 2-17, 2-19, 2-24, 2-27, 2-29, 2-33, 2-35, 2-37, 2-39, 2-41, 2-45, 2-49, 2-53, 2-55, 2-69, 2-71, 2-73, 2-75, 2-95, 2-99, 2-101, 2-127, 2-131, 3-11, 3-13, 3-15, 3-55, 3-67
32492	2-7, 2-15, 2-33, 2-35, 2-41, 2-43, 2-45, 2-55, 2-63, 2-127, 3-7, 3-9, 3-55, 3-61, 3-69
32493	2-23, 2-24
32509	4-29
32746	2-5
32975	2-61
32981	2-27, 2-103, 2-107
32982	3-37
32983	2-15
32987	2-49
32988	2-33, 2-35
331385	3-71
331410	3-71
331411	3-71
331412	3-71
331413	3-71
33295	3-3
33333	2-37
33373	2-81
33401	2-75
33580	4-5
33595	2-23
33612	2-33, 2-35
33671	2-47
33812	2-133
33932	2-21, 2-55, 2-83, 2-87, 3-3, 3-37
34178	4-5
34323	2-107
34359	3-15
34411	2-7, 2-63, 3-13
35493	4-10
35707	2-33, 2-35, 2-45
35904	2-127
360023	2-51
360074	2-51
360270	2-51
360271	2-51
360272	2-51
360273	2-51
360274	2-51
360275	2-51
360276	2-51
360801	2-85, 2-89, 2-99
360802	2-51
360824	2-61, 3-67
360952	2-61
360973	2-92
361044	2-117
361047	3-17
361071	2-13
361073	2-13
361075	2-13
361339	2-53, 2-55, 2-63, 2-75, 3-3, 3-19, 3-21
361366	5-4, 6-4
361368	5-23
361372	6-5
361373	5-23, 6-20
361374	5-10, 6-7, 6-10
361375	6-26
361389	6-7
361392	5-12, 6-12
361395	6-17
361401	6-7
361427	5-11
361428	5-4, 6-4
361430	5-30, 6-28
361436	5-3, 6-3
361440	5-8, 5-31, 6-8
361589	6-12
363162	2-79
36328	2-85, 2-89, 2-105
363301	2-79
363458	2-7
363543	2-97
363976	2-9
364347	2-53
364441	2-79, 3-15
364587	2-57
364749	2-15
364779	2-29
364864	2-53
364948	2-53
364972	2-23
364978	2-121
365004	3-17
365066	2-29
365095	2-97
365164	2-97
365190	2-29
36643	2-55, 2-103, 2-107
36644	2-73
36658	2-61
36661	2-61
367313	2-67, 2-77
367591	2-23
367770	2-77
367771	2-7
367812	2-43
367949	2-91, 2-92
367974	3-61
368056	2-23
368059	2-23
368090	5-31, 6-29
368091	5-31, 6-29

Part Number	Page Number
368132	2-39
368391	2-15
36845	3-11
369359	3-7, 3-9, 3-69
369704	2-47
369745	2-31
369746	1-1, 2-31
369747	2-31
369811	3-3
370100	2-79
371017	6-9
372900	5-10
372901	5-10, 6-10
372904	5-10, 6-10
372905	5-11, 6-11
372906	6-5
372907	6-5
372912	5-10, 6-10
372913	5-10, 6-10
372917	5-23, 6-20, 6-21
372918	5-10
372920	5-3
372921	5-5
372927	5-10
372928	5-10, 6-10
373217	4-5
373226	4-5
373236	4-5
373260	4-5
373291	4-5
373297	4-5
373298	4-5
373299	4-5
373317	4-7
373327	4-7
373346	4-7
373347	4-7
373348	4-7
373389	4-7
373391	4-7
373393	4-7
373394	4-7
373395	4-7
373398	4-7
373402	4-7
373413	4-7
373427	4-7
373429	4-7
373434	4-7
373493	4-7
373494	4-7
373631	4-19
373633	4-11, 4-13, 4-15, 4-17, 4-21, 4-23
373637	4-11, 4-21, 4-23
373639	4-11, 4-21, 4-23
373640	4-11, 4-13, 4-15, 4-17, 4-19, 4-21, 4-23
373642	4-13, 4-15, 4-17, 4-19, 4-21, 4-23
373646	4-13, 4-15, 4-17, 4-19
373647	2-133, 4-11, 4-13, 4-15, 4-17, 4-19, 4-21, 4-23
373648	4-11, 4-13, 4-15, 4-17, 4-19, 4-21, 4-23
373656	4-11, 4-13, 4-15, 4-17, 4-21, 4-23
373657	4-11, 4-13, 4-15, 4-17, 4-19, 4-21, 4-23
373658	4-11, 4-13, 4-15, 4-17, 4-19, 4-21, 4-23
373659	4-11
373660	4-11, 4-21, 4-23
373661	4-13, 4-15, 4-17
373662	4-13, 4-15, 4-17
373663	4-13, 4-15, 4-17, 4-19, 4-21, 4-23
373664	4-13, 4-15, 4-19, 4-21
373665	4-19, 4-21, 4-23
373666	4-19, 4-21, 4-23
373667	4-19, 4-21, 4-23
373668	4-19, 4-21, 4-23
373669	4-19
373670	4-13, 4-15, 4-17, 4-19, 4-21, 4-23
373671	4-19, 4-21, 4-23
373672	4-13, 4-15, 4-19, 4-21
373673	4-13, 4-15, 4-19, 4-21
373678	4-7
373679	4-7
373680	4-7
373681	4-7
373683	4-15, 4-17
373684	4-21, 4-23
373688	4-21, 4-23
374560	2-49
374563	2-49
375321	3-65
375322	3-3
37555	4-8, 4-9
37616	4-5
376735	2-43
377236	3-17
377349	2-92, 3-3
377537	1-1
377538	1-1
377540	1-1
37756	4-5
379609	2-49, 4-5
379656	2-29
379791	2-65, 2-67
379870	2-85, 2-89
380521	2-23
381502	2-53
381858	2-117
381862	2-117
382099	2-73
382224	2-53
382320	2-91, 2-92, 2-99, 3-70
382516	2-13
38255	4-5
383165	2-13
384418	2-21, 2-83, 2-87
384419	2-21
384859	6-29
384871	6-9
384872	6-7, 6-11, 6-29
384874	6-10
385644	3-23, 3-25, 3-31, 3-33, 3-41, 3-43, 3-65
385685	2-92, 2-99, 3-5
386088	2-55, 2-85, 2-89
386264	2-79
386298	2-79, 3-9
386652	3-5
386847	2-77
387237	2-79
387281	2-121
387433	2-79
387500	2-79
388153	2-17
388500	6-21
38968	4-5
39051	5-3, 6-3
39062	5-3, 6-3
39063	5-3, 5-5
39065	5-7, 5-25, 5-29, 5-31, 6-7, 6-23, 6-27
39073	5-4, 5-5, 6-4, 6-5
39087	5-3, 6-3
39088	5-3, 5-5, 6-3, 6-5
39094	5-4, 6-4
390994	2-91
39103	5-7
39105	5-3
39119	5-9
39121	5-7, 5-25, 5-29, 5-31, 6-7, 6-23, 6-27
391368	2-19
39160	5-15, 5-28, 5-30, 6-23
39161	5-7
391969	2-174
39197	5-15, 6-15
39210	2-71, 2-131, 3-15
392171	2-13
392609	2-103
392611	2-33, 2-35
39277	2-7, 2-9, 2-24, 2-27, 2-33, 2-35, 2-39, 2-61, 2-95, 2-101, 2-105, 2-127
39278	2-55
39279	2-53
39281	2-81
39283	2-7, 2-9, 2-23, 2-33, 2-35, 2-41, 2-43, 2-127
39284	2-23, 2-31, 3-69
39285	2-41, 2-43, 2-107
39308	2-85, 2-89

Part Number	Page Number
39311	2-9, 2-61
39312	2-61
393135	2-83, 2-87, 3-67
393215	2-49, 2-57
393244	1-1, 2-35
393255	3-13
393370	2-33
393371	2-33
393400	6-17
393401	2-23
39349	2-9, 2-15, 2-21, 2-55, 2-85, 2-89, 2-91, 2-95, 2-101
39350	2-49
393504	6-5
393566	6-20
393570	6-3
393588	6-8
393598	6-12
39507	6-20
39508	5-23
39527	2-69, 2-71, 4-8
39534	2-103, 2-107
395825	2-65
395973	2-131, 3-15
395974	2-131, 2-133, 3-15
396221	2-115
396255	2-117, 2-119
396266	2-117
396438	2-117
396476	2-131, 3-15
39703-2	1-1, 2-24
397648	3-61
39811	2-73
398279	2-31
398468	3-19
398474	3-19
398500	3-65
398501	2-13
398508	2-13
39924	2-63
40166	5-23, 5-28, 6-20, 6-26, 6-27
40362	2-129
40407	5-29, 6-27
40409	5-11, 5-13, 6-11
40418	6-29
40607	2-63
40678	2-127
41130	2-103
41139	2-21
41141	2-75
41169	2-55
41178	2-15, 2-41, 2-43, 2-107
41185	2-85, 2-89
41186	2-35, 2-55, 2-95, 2-101, 2-103, 3-11
41187	2-77, 2-85, 2-89
41295	3-3, 3-5
41315	2-97
41346	3-11
41359	3-37
41361	2-35
41399	2-55
41430	2-23, 2-33, 2-39, 2-41, 2-43, 2-107, 2-127, 3-55, 3-69
41445	2-85, 2-89
41579	4-29
41619	2-73, 2-77, 2-85, 2-89
41792	5-4
41973	5-15, 5-29, 5-31, 6-13, 6-15, 6-27, 6-29
42011	2-35
42120	2-73
42120-1	2-57
42133A	3-3, 3-19, 3-29, 3-39
42180	2-55
42215	2-107
42223	2-49
42226	2-103, 2-131, 2-133, 3-15
42467	2-55
43555	2-79, 2-95, 2-101
43844	2-39, 2-45, 3-3, 3-5, 3-29, 3-39
44868	2-69, 2-71, 2-107, 2-125, 2-131, 3-15
44869	2-107, 2-125, 2-129, 3-15
44961	4-29
45622	4-5
45623	4-5
45628	4-8, 4-9
46236	3-49, 3-51
46390	2-33
46480	2-131
46481	2-127
46482	2-129, 2-133
46563	2-53
46785-1	2-77
46800	3-7
47504	3-15
47512	2-125
47513	2-105, 2-125
47522	2-49, 2-131
47566	2-29
47585	2-17
47638	2-57
47719	3-13
47752	2-127
47801	2-49
48079	2-55
48126	2-27
48267	2-27
48790	3-39
48813	4-10
48985	2-73, 3-11
49145	2-51
49266	2-13, 2-29, 2-39, 2-41, 2-43, 2-45, 2-49, 2-71, 3-19, 3-39, 3-52, 3-53
49697	2-83, 2-87
49800	2-15, 2-39
49883	2-131
49933	2-103, 2-131, 2-133
50161	2-127
50178	3-13
50335	2-55
50544	2-97
50646	2-63
50901	3-39
50902	2-33, 2-45
50960	2-107
51109	2-53
51176	2-23
51305	2-39, 2-45
51331	5-5
51332	5-11, 6-11
51338	2-49
51339	2-49
51754	2-121
51787	2-127
51824	2-73
51869	2-23
52405	4-5
53029	2-29
53076	2-125
53466	2-7, 2-9, 2-39, 2-45, 2-47, 2-127, 3-21
53485	2-107, 4-10
53947	2-55
53953	2-55
54017	2-115
54051	2-49
54052	2-49
54087	2-49
54095	4-10
54205	2-55
54274	2-39, 2-41, 2-43, 2-103, 2-105, 2-107
54275A	2-103, 2-107
54333	2-27, 2-29, 2-47, 3-13, 3-19, 3-23, 3-25, 3-29, 3-31, 3-33, 3-39, 3-41, 3-43, 3-65
54390	2-51
54607	2-53
54615	2-99
54655	2-55
54861	2-103
54911-16	2-23
55272	3-49, 3-51, 3-52, 3-53
55455	2-129
55586	2-69, 2-71, 2-131, 2-133, 3-15
55685	3-15
55837	2-23
55845	3-61, 3-63

Part Number	Page Number
55847	5-8, 6-8
55926	4-7
56078	2-69, 2-71
56185	2-17
56186	2-29, 2-169, 3-19, 3-29, 3-37, 3-65
56690	2-17, 2-129, 3-15, 3-17
56692	2-105, 3-7
56820	2-17, 2-131, 2-133, 3-15
56821	3-7, 3-9
56835	2-17
56992	2-13
57189	2-103
57248	3-29
57315	2-49
57702	3-69
57804	2-47
57946	2-121
58311	2-53
58494	2-15
58566	2-23
58592	2-129
58819	2-7, 2-9, 2-54
58842	2-49
58979	2-99
59009	2-53
59015	2-29
59156	2-33, 2-35, 3-11
59194	2-85
59195	2-89
59378	4-10
59542	2-57
59577	2-17, 2-133, 3-17
59578	2-23
59633	3-11
59649	2-107
59668	2-54
59735	2-107
59967	2-107
60090	2-127, 3-15
60295	2-47
607775	4-29
61490	4-8, 4-9
62471	2-127
630164	3-39
630371	3-3
63175-1	3-11
63233	3-11
63234	2-55
63244-2	3-3
63245-1	3-19
63430	3-61, 3-63
63448	3-61, 3-63
63451	3-61, 3-63
63468	2-81
63810	2-23, 2-97, 3-3, 3-5, 3-13, 3-23, 3-25, 3-31, 3-33, 3-41, 3-43, 3-65
63923	4-26
63987-1	3-39
64379	2-65
64425	2-81, 2-83, 2-85, 2-87, 2-89, 3-7
64743	3-19
64778	3-39, 3-65
65145-1	2-125
65180	2-81
65215	2-129
65230	4-9
65241	4-8
65441	2-55
65580	3-63
65581	3-39
65695	2-69, 2-71
66187	5-4, 6-4
66194	5-5, 6-5
66204	5-17, 6-17
66205	5-8
66207	5-17, 6-17
67004	3-61, 3-63
67555	2-73
67767	2-39, 2-55
67811	2-125
68106	2-23
68866	2-55
68869	2-47
69173	2-131, 2-133
69234	2-29, 2-31
69582	2-53
69657	3-61, 3-63
69659	3-61, 3-63
69785	2-92
70096	4-7
70100	4-7
70157	2-9, 2-105
70165	2-23, 5-28, 6-23
70173	2-29
70188	5-28, 6-23
70189	5-7
70196	5-21, 6-19
70197	5-21, 6-19
70198	5-21, 6-19
70199	5-21, 6-19
70200	5-21, 6-19
70201	5-21, 6-19
70202	5-21, 6-19
70203	5-21, 6-19
70204	5-21, 6-19
70205	5-21, 6-19
70206	5-21, 6-19
70207	5-21, 6-19
70208	5-21, 6-19
70209	5-21, 6-19
70210	5-21, 6-19
70211	5-21, 6-19
70212	5-21, 6-19
70213	5-21, 6-19
70563	2-69, 2-71
70622	2-17
70623	2-17
70709	2-17
70717	2-17
70887	5-3, 6-3
70888	5-3, 6-3
70889	5-4, 6-4
70890	5-4
70891	5-4
70893	5-4
70895	5-5
70896	5-5
70897	5-5, 6-5
70899	5-5
70900	5-7, 6-7
70901	5-7, 6-7
70902	5-7, 6-7
70903	5-7, 6-7
70904	5-7, 6-7
70905	5-7, 6-7
70906	5-7, 6-7
70907	2-23, 5-7, 6-7
70909	5-7
70910	5-7
70911	2-23, 5-7, 6-7
70912	5-7, 6-7
70913	5-7, 5-10, 6-7, 6-10
70915	5-8
70916	5-8
70917	5-8
70919	5-8, 6-8
70920	5-8, 6-8
70921	5-9
70922	5-9
70923	5-9, 6-9
70924	5-9, 6-9
70925	5-9, 6-9
70926	5-9
70927	5-9
70928	5-9
70929	5-10, 6-10
70934	5-11, 6-11
70935	5-11, 6-11
70936	5-12, 6-12
70937	5-12, 6-12
70938	5-17
70939	5-17
70940	5-17
70941	5-17, 6-17
70942	5-17, 6-17
70943	5-17, 6-17
70944	5-17
70945	5-17, 6-17
70946	5-17, 6-17
70947	5-17, 6-17
70948	5-17, 6-9
70949	5-17
70950	5-17
70951	5-17
70952	5-17

Part Number	Page Number
70953	5-17
70954	5-17, 6-17
70955	5-17, 6-17
70956	5-19, 6-18
70957	5-19
70964	5-23
70965	5-23, 6-20
70966	5-23, 6-20
70967	5-23, 6-20
70968	5-23, 6-20
70972	5-25, 6-23
70973	5-25, 6-23
70974	5-25, 6-23
70975	5-13
70976	5-13
70977	5-13, 6-13
70978	5-13, 6-13
70979	5-13
70980	5-28
70982	5-29, 6-27
70983	5-29, 6-27
70984	5-29, 6-27
70985	5-30
70986	5-30
70987	5-30
70988	5-30
70989	5-30, 6-28
70991	5-30, 6-28
70992	5-30, 6-28
70994	5-31, 6-29
70998	5-3, 6-3
70999	6-3
71204	2-77
71340	2-49
71341	2-49
71367	2-53
71369	2-73
71385	2-23
71388	2-23, 2-33, 2-35
71556	2-117, 2-119
71607	2-85, 2-89
71726	2-129
71727	2-131, 2-133
71729	2-69, 2-71, 4-8
71735	2-117
71741	2-117, 2-119
71868	3-11
71869	3-11
71874	3-11
71941	2-19
71985	5-3, 6-3
71986	5-3, 6-3
71987	5-3, 6-3
71988	5-3, 6-3
71989	5-3
71990	5-3, 6-3
71991	5-3, 6-3
71992	5-3, 6-3
71993	5-3, 6-3
71995	5-4, 5-13, 6-28
71996	5-5, 6-5
71997	5-5, 6-5
71999	5-5
72010	5-5, 6-5
72011	5-7
72012	5-7
72013	5-7, 6-7
72014	5-7, 6-7
72015	5-7, 6-7
72016	5-7, 6-7
72017	5-7
72018	5-7, 5-29
72019	6-7
72897	2-57
72926	2-49
72968	3-39, 3-63
72970	2-17
72993	5-7, 6-7
72994	5-7, 5-11, 6-7
72995	5-7, 5-31
72996	5-8, 5-11, 5-31
72997	5-8
72998	5-9, 6-9
72999	5-9
73027	2-17
73260	3-3, 4-26
73281	2-49
73342	4-3
73411	2-55
73433	3-3
73468	3-3, 3-29, 3-39
73471	2-39, 2-45
73479	5-9, 6-9
73481	5-11, 6-11
73482	6-10
73483	5-10, 6-10
73484	5-10, 6-10
73487	5-11, 6-11
73488	5-11, 6-11
73489	6-11
73491	5-12, 6-12
73492	5-12, 6-12
73493	5-12, 6-12
73494	5-12, 6-12
73495	5-12
73496	5-12
73497	5-12, 6-12
73498	5-12, 6-12
73499	5-12, 6-12
73500	5-12, 6-12
73501	5-12
73502	5-12, 6-12
73503	5-12
73504	5-12, 6-12
73505	5-12
73506	5-12, 6-12
73507	5-12, 6-12
73508	5-12, 6-12
73509	5-15, 6-15
73510	5-15
73511	5-15, 6-15
73512	5-15, 6-15
73513	5-15, 6-15
73514	5-15, 6-15
73515	5-15, 6-15
73516	5-15, 6-15
73517	5-15, 6-15
73518	5-15, 6-15
73519	5-15, 6-15
73520	5-17, 6-17
73521	5-17, 6-17
73522	5-17, 6-17
73523	5-17, 6-17
73524	5-17, 6-17
73525	5-17, 6-17
73526	5-17, 6-17
73527	5-17, 6-17
73528	5-17, 6-17
73529	5-17, 6-17
73530	5-17, 6-17
73532	5-17, 6-17
73533	5-19, 6-18
73534	5-19
73535	5-19
73545	5-21, 6-19
73547	5-21, 6-19
73551	5-21, 6-19
73554	5-23, 6-20
73555	5-23, 6-20
73560	5-23, 6-20
73561	5-25, 6-23
73562	5-25, 6-23
73563	5-25, 6-23
73565	5-25, 6-23
73567	5-27, 6-25
73568	5-27, 6-25
73569	5-27, 6-25
73570	5-27, 6-25
73571	5-27, 6-25
73572	5-27, 6-25
73573	5-27, 6-25
73574	5-27, 6-25
73575	5-27, 6-25
73576	5-27, 6-25
73577	5-27, 6-25
73578	5-27, 6-25
73579	5-27, 6-25
73580	5-27, 6-25
73581	5-27, 6-25
73582	5-27, 6-25
73585	5-27, 6-25
73586	5-27, 6-25
73588	5-27, 6-23, 6-25
73589	5-27, 6-23, 6-25
73590	5-27, 6-23, 6-25
73592	5-13
73593	5-13, 6-13
73594	5-13, 6-13
73595	5-13
73596	5-13, 6-13

Part Number	Page Number
73597	5-13, 6-13
73598	5-13, 6-13
73599	5-13, 6-13
73600	5-13, 6-13
73601	5-13, 6-13
73602	5-13, 6-13
73603	5-13, 6-13
73604	5-13, 6-13
73605	5-28
73606	5-28, 6-26
73607	5-28
73610	5-28, 6-26
73618	5-29
73619	5-29, 6-27
73620	5-29
73621	5-29, 6-27
73622	5-29, 6-27
73623	5-29, 6-27
73624	5-29, 6-27
73625	5-29, 6-27
73626	5-29, 6-27
73627	5-30
73628	5-30
73629	5-30
73630	5-30
73631	5-30, 6-28
73632	5-31, 6-29
73633	5-31, 6-29
73634	5-31, 6-29
73636	5-31
73736	2-13
73737	2-35
74077	2-21
74090	2-95, 2-101
74094	4-8, 4-9
74095	4-8
74098	4-8, 4-11, 4-19, 4-21, 4-23
74099	4-8
74100	4-8, 4-9
74122	4-5
74123	4-5
74125	4-5
74165	4-5
74166	4-5
74167	4-5
74168	4-5
74180	4-7
74183	4-25
74185	4-25
74193	4-25
74196	4-25
74222	4-25
74225	4-7
74226	4-7
74232	4-25
74233	2-103, 4-10
74237	4-7
74243	4-25
74244	4-25
74245	4-25
74250	4-8, 4-9
74405	2-23, 5-21, 6-19
74440	2-55
74452	2-37
74454	2-107
74455	2-7, 2-39, 2-127
75456-3	2-103
75456-4	2-103
75968	2-17
76099	2-75, 3-21, 3-25, 3-33, 3-43
761490	2-7, 3-13
762249	3-19
762514	2-47
763042	2-59
763090	2-73
763114	3-19
763115	3-52, 3-53
763116	2-39, 2-61, 3-19, 3-25, 3-33, 3-43
76315	2-105
76316	2-131, 3-17
76426	2-99
76570	2-23, 2-33, 2-35, 2-95, 2-101
76888	2-15
76955	2-35
76957	2-33
769785	3-65
77003	4-11, 4-19, 4-21, 4-23
77005	4-11, 4-13, 4-15, 4-17, 4-19, 4-21, 4-23
77006	4-19
77097	2-65, 2-67, 2-77, 2-85, 2-89, 2-131, 2-133, 3-11
77098	2-73, 2-105, 2-107, 3-11
77221	2-176
77345	2-49
78043	2-29
78398	3-3, 4-3
78829	4-3
78830	4-3
78833	4-3
78836	4-3
78838	4-3
78839	4-3
78840	4-3
78841	4-3
78842	4-3
78843	4-3
78875	4-26
78950	4-27
78951	4-27
78952	4-27
79273-1	3-23, 3-25
79273-2	2-97
79380	2-103
79381	2-37, 2-39, 2-45
79399	2-23
79484	3-3
79497	3-3
79506	2-95, 2-101
79729	4-5
79828	4-5
80288	2-9
80395	2-79, 2-95, 2-101
80409	2-81
80950	2-81
81784	2-85, 2-89
81952	2-81
82727	2-9
82739	2-63
82832	2-49
82839	3-13
83874	1-1, 2-79
83879	2-55
84170	2-55
84597	1-1
84631	5-5
84635	5-25, 5-27, 6-23, 6-25
84636	5-13, 6-13
84638	5-23, 6-20
84644	5-25, 6-23
84647	5-3
84648	5-27, 6-25
84649	5-27, 6-25
84650	5-27, 6-25
84651	5-27, 6-23, 6-25
84660	3-71
86508	3-3
86636	2-99
86659	2-51
86751	2-53
86759	3-7
86866	2-73
87536	2-13
87631	2-69, 2-71
87738	2-29
87816	2-85, 2-89
87866	1-1, 2-13
9000355	2-27
9000845	3-51, 3-53
9000846	3-49, 3-52
9000879	3-49, 3-51, 3-52, 3-53
9001310	3-65
9001314	3-55
9001316	3-70
9001321	3-47
9001327	3-49
9001331	3-51
9001334	3-61, 3-63
9001338	3-69
9001717	3-53
9001718	3-52
9002382	2-9
9002383	2-9
9002398	2-129

Part Number	Page Number
9002399	2-7
9002400	2-7
9002401	2-7
9002410	2-9
9002411	2-37
9002412	2-39
9002435	2-13
9002683	2-107
9002684	2-103
9002708	4-3
9002709	4-3
9003009	4-32
9003068	2-92
9003069	2-91
9003070	2-92
9003071	2-91
9003130	1-1
9003313	2-99
9003424	2-9
9003427	2-9
9003430	2-9
9003444	2-61
9003449	2-99
9003453	2-13
9003455	2-103
9003461	2-103
9003611	2-27
9003774	2-59
9003793	2-95
9003794	2-101
9003868	6-8
9003869	6-8
9003870	6-8
9003888	6-4
9003891	6-18
9003893	2-99
9003934	2-27
9003958	2-27
9004117	2-91
9004283	6-28
9004335	6-3
9004337	6-3
9004338	6-4
9004339	6-4
9004340	6-5
9004341	6-5
9004346	6-7
9004347	6-7
9004348	6-4
9004349	6-9
9004350	6-9
9004358	6-15
9004361	6-17
9004363	6-17
9004368	6-13
9004369	6-13
9004371	6-13
9004372	6-13
9004373	6-13
9004374	6-26
9004375	6-26
9004376	6-23
9004379	6-28
9004381	6-28
9004382	6-28
9004385	6-27
9004386	6-27
9004389	6-20
9004390	6-20
9004393	6-20
9004395	6-21
9004396	6-21
9004397	6-21
9004398	6-21
9004399	6-21
9004400	6-21
9004401	6-21
9004402	6-8
9004403	6-8
9004404	6-8
9004405	6-8
9004406	6-8, 6-11
9004407	6-8
9004409	6-12
9004410	6-12
9004431	6-3
9004432	6-7
9004433	6-10
9004435	6-4
9004436	6-9
9004437	6-9
9004438	6-9
9004439	6-9
9004440	6-15
9004441	6-17
9004442	6-18
9004443	6-18
9004444	6-18
9004445	6-13
9004446	6-26
9004447	6-26
9004448	6-28
9004449	6-27
9004450	6-20
9004451	6-20
9004454	6-23
9004475	4-21, 4-23
9004493	2-79
9004775	6-28
9004881	2-13
9005165	2-91, 2-92
9006001	5-4
9006060	1-1
9006257	3-71
9006334	2-7, 2-63, 3-13
9006386	2-71
9006398	2-69, 2-71
9006814	2-41
9006816	2-41
9007131	3-47
9007142	2-125
9007513	2-7
9007882	3-37, 4-29
9007883	4-29
9007912	2-13
9007913	2-13
9008248	2-49
9008757	4-32
9008848	4-32
9008868	3-29, 4-32
9010085	3-57
9010086	3-57
9011343	4-17, 4-23
9011345	4-17, 4-23
9011346	4-17, 4-23
9011347	4-17, 4-23
9012585	4-31
9012587	4-31
9012589	4-31
9012590	4-31
9012591	4-31
9012592	4-31
9012593	4-31
9012594	4-31
9012595	4-31
9014281	3-39
9014662	2-5
9014666	2-5
9014867	3-67

PART DESCRIPTION TO PAGE NUMBER CROSS REFERENCE LIST

A

Ace, Thrust, Motor, Hyd [En], 4-9
Actuator, Govnr, Dsl, 2-23
Actuator, Valve, By-Pass [En], 4-7
Adapter, Actuator, Govnr, Eng, Dsl, 2-23
Adapter, Rod-End, Side Brush, 3-11
Alarm Assy, Backup, 12/48Vdc, 3-47
Alarm Kit, Backup, Ci [M20 And T20], 3-47
Alarm, 9-48vdc, 95 Db(A) [Ec-H20], 3-37
Alarm, Warning [Sonalert, St628], 2-47
Alternator, 12vdc, 075a [Valeo], 2-33, 2-35
Angle, Brace, Shrd, 2-21
Angle, Lh, 2-77
Angle, Mtg, Antenna, Telem, 3-57
Angle, Mtg, Stl, .12 1.6 1.6 02.2l, 2-127
Angle, Mtg, Valve, 3-13
Angle, Retainer, 2-59
Angle, Rh, 2-77
Angle, Sppt, Fan, 2-103, 2-105
Angle, Sppt, Tank, Rear, 2-91
Antenna, Telem, 70 In [Gprs], 3-57
Arm [Positioning], 2-55
Arm Wldt, Alternator, Dsl, 2-33, 2-35
Arm Wldt, Lift, Sqge, Lh, 2-89
Arm Wldt, Safety, Sppt, Seat, .38d 06.5d, 2-15
Arm Wldt, Safety, Sppt, Seat, .38d 10.1l, 2-99
Arm Wldt, Sqge, Lift, Rh, 2-85
Arm, Alternator, Dsl, 2-33
Arm, Cntrl, Pintle, Centering, 2-55
Arm, Lever, Brake, 4.1 [Knott], 2-51
Arm, Link, 3-11
Arm, Pinch, 2-95, 2-101
Arm, Pintle, 2-55
Arm, Rocker [Ku], 6-12
Arm, Sqge, Side, Lh, 2-89
Arm, Sqge, Side, Rh, 2-85
Armature, Motor [Ku], 6-19
Armrest, 4-31
Armrest, Rh, 2-15
Assembly Apparatus, Idle, 5-28
Assembly Bolt, Adjusting, 5-28
Assembly Camshaft, 5-15
Assembly Case, Main Bearing, 5-9
Assembly Case, Main Bearing 1, 5-9
Assembly Case, Main Bearing 2, 5-9
Assembly Case, Main Bearing 3, 5-9
Assembly Cock, Drain, 5-3
Assembly Connecting Rod, 5-17
Assembly Lever, Fork, 5-30
Assembly Pipe, Over Flow, 5-23
Assembly Piston Ring, 5-17
Assembly Piston Ring 05, 5-17
Assembly Plate, Control, 5-29
Assembly Pump, Injection, 5-27
Assembly Pump, Injection (See Injection Pump Breakdown), 5-25
Assembly Pump, Water, 5-8
Assembly Rocker Arm, 5-12
Assembly Rotor, Oil Pump, 5-7
Assembly Seal, Mechanical, 5-8
Assembly Shaft, Governor, 5-13
Assembly Shaft, R-arm, 5-12
Assembly Tappet, 5-27
Assy Armature, 5-21
Assy Bolt, 5-21
Assy Holder, Brush, 5-21
Assy Starter, 5-21
Assy Switch, Magneto, 5-21
Assy Yoke, 5-21

B

Bag, Power, 3-63
Ball, 5-7, 5-17, 5-21
Ball, Cshft [Ku], 6-17
Ball, Relief, Oil [Ku], 6-7
Band, Pipe, 5-23
Bar Wldt, Retainer, Sqge, Rear, 2-79
Bar, Flat, Ss, .06 X .50 X 10.0l 2/.19sl, 2-13
Bar, Flat, Stl 0.19, 01.50 X 04.1l, 2-49
Bar, Flat, Stl 0.38, 01.00 X 03.3l, 2-29
Bar, Isolator, Vacfan [M20 2007], 2-107
Bar, Isolator, Vacfan [M20], 2-107
Bar, Mtg, Hppr, 2-59
Bar, Mtg, Hppr Cover, 2-61
Bar, Retainer, 3-7
Bar, Rnd, Plstc, 0.31d 12.5l, 2-91, 2-92
Base, Fltr, Oil [Ku], 2-23
Battery, Wet, 12Vdc 0600Cca, 1-1, 2-47
Bearing, 5-21, 6-19
Bearing [Ku], 6-8
Bearing Kit [Cl], 4-25
Bearing, Ball, 5-8, 5-13, 5-30
Bearing, Ball [Ku], 6-13, 6-28
Bearing, Ball, 0.79b 1.85d 0.55w, 2-33
Bearing, Ball, 0.98b 2.05d 0.59w, 2-69, 2-71
Bearing, Ball, 1.18b 2.44d 0.63w, 2-51
Bearing, Case [Ku], 6-9
Bearing, Cone, 1.38b 0.71w, 2-49
Bearing, Cone, Pump, Hyd, 4-7
Bearing, Cshft [Ku], 6-17
Bearing, Cshft, -.2mm [Ku], 6-17
Bearing, Cshft, Std [Ku], 6-9, 6-17
Bearing, Cup, 4-7
Bearing, Cup, 2.56d 0.55w, 2-49
Bearing, Flng, 2-Hole, 0.50b, 2-17
Bearing, Flng, 2hole, 0.50b [Nyl], 2-17
Bearing, Pillowblock, 1.02b [Solid Pye], 2-53
Bearing, Rod, Connecting [-.2mm, Ku], 6-17
Bearing, Rod, Connecting [-.4mm, Ku], 6-17
Bearing, Rod, Connecting, Std [Ku], 6-17
Bearing, Self Align, 0.75b 1.25d, 2-73
Bearing, Self Align, 1.25b 2.00d, 2-57
Bearing, Split, 1.00b, 2-53
Bearing, Thrust, 4-9
Bearing, Thrust [-.4mm, Ku], 6-17
Bearing, Thrust [Ku], 6-17
Bearing, Thrust, 0.53b 1.00d 0.03w, 3-11
Bearing, Thrust, Pump, Hyd, 4-7
Bearing, Thrust, Std [Ku], 6-17
Bellcrank, Lift, Sqge, 2-77
Bellows, Seat, 4-31
Belt Kit, W/ Installation Tool, 6-28
Belt, v, 37.0L [3V], 2-33
Belt, V, 37.5l [3v], 1-1, 2-33
Belt, V, 42.0l [Hc41], 1-1, 2-35
Blade, Sqge, .38 3.55w 038.3l, Linatex, 1-1, 2-83, 2-87
Blade, Sqge, .38 3.55w 038.3l, Ure, 1-1
Blade, Sqge, .38 3.55w 038.3l, Ure (Option), 2-83, 2-87
Blade, Sqge, Front, 49.58l [Linard], 2-79
Blade, Sqge, Front, 49.58l Linatex, 1-1
Blade, Sqge, Front, 49.58l Ure, 1-1
Blade, Sqge, Front, 49.58l Ure (Option), 2-79
Blade, Sqge, Rear, 53.78l Ure, 1-1
Blade, Sqge, Rear, 53.78l Ure (Option), 2-79
Blade, Sqge, Rear, Linatex, 1-1, 2-79
Blade, Sqge, Side Brush, Linatex, 1-1, 3-9
Blade, Sqge, Side Brush, Urethane, 1-1, 3-9
Block, Centering, 2-77
Block, Guide, Hppr, 2-7
Bolt, 5-4, 5-5, 5-7, 5-8, 5-9, 5-11, 5-13, 5-15, 5-17, 5-19, 5-21, 5-25, 5-28, 5-29, 5-30, 6-7, 6-9, 6-11, 6-12, 6-19, 6-29
Bolt [Ku], 6-4, 6-8, 6-11, 6-18, 6-23, 6-27, 6-29
Bolt, Adjusting, 5-28
Bolt, Adjustment Assy [Ku], 6-26
Bolt, Bearing Case 1, 5-9
Bolt, Carriage, M06 X 1.0 X 30, 2-65, 2-67
Bolt, Carriage, M06 X 1.00 X 40, 4.6, 3-37
Bolt, Carriage, M10 X 1.5 X 70, 2-81
Bolt, Connecting Rod, 5-17
Bolt, Cylinder Head, 5-5
Bolt, Eye, .25-20 X 1.40 X .25 Eye, 2-55
Bolt, Eye, M08 X 1.25 X 070mm, 05.50 Eye, 2-85, 2-89
Bolt, Eye, M10 X 1.5 X 064mm, 7.10 Eye, 2-77
Bolt, Eye, M8X1.25, 2.75L, 2-55
Bolt, Flng, 6-8
Bolt, Flywheel, 5-19
Bolt, Hex [Ku], 5-31, 6-13, 6-15, 6-23, 6-27, 6-29
Bolt, Motor, Hyd, 4-5
Bolt, Shld, .31d X 1.00, .25-20, 2-55
Bolt, Shld, 1.37d X 5.13l,1.1-18 Drilled, 2-49
Bolt. Bearing Case 2, 5-9
Boot, .63id .29l .90w, 2-13

Boot, 90deg .50id 1.00id 2.50l, Red, 2-33, 2-35
Boot, Bellows, 3.1l 4.4w 2.8h 1hole, Neo, 2-17
Boot, Circuitbreaker, 3-37
Boot, Switch, Ignition, 2-13
Bracket Wldt, Brush Wrap Mtg, Rh, 2-73
Bracket Wldt, Brush Wrap, Lh, 2-73
Bracket Wldt, Cooler, Hyd Fluid, 2-127
Bracket Wldt, Flap, Recirculation, 2-75
Bracket Wldt, Guard, Sqge, 3-69
Bracket Wldt, Latch, 2-19
Bracket Wldt, Mtg [FaST Gen 2+], 3-29
Bracket Wldt, Mtg [FaST], 3-21
Bracket Wldt, Mtg, Alternator, Dsl, 2-33, 2-35
Bracket Wldt, Mtg, Caster, 2-81
Bracket Wldt, Mtg, Eng, Front, Dsl, 2-23, 2-24
Bracket Wldt, Mtg, Eng, Rear, Dsl, 2-23
Bracket Wldt, Mtg, Side Brush, 3-7
Bracket Wldt, Mtg, Side Brush Fixed, 3-9
Bracket Wldt, Mtg, Sqge, 2-81
Bracket Wldt, Mtg, Tank, 2-9
Bracket Wldt, Pivot, Hppr Door, Lh, 2-65, 2-67
Bracket Wldt, Pivot, Hppr, Rh, 2-67
Bracket Wldt, Propel, Pintle, 2-55
Bracket Wldt, Steering, Tilt, 2-17
Bracket Wldt, Tank, Soltn, Rh, 2-91
Bracket Wldt, Tilt, Rh, 2-17
Bracket, Clamp, Hose, 2-33, 2-45
Bracket, Cover, 2-41, 2-43, 2-65, 2-67
Bracket, Cover, Hopper, 2-65, 2-67
Bracket, Cover, Hppr, 2-61
Bracket, Ftg, Bh, 2-39
Bracket, Guide, Shrd, 2-21
Bracket, Keeper, Latch, 2-92
Bracket, Latch, Cover, 2-21, 2-92, 3-67
Bracket, Latch, Keeper [Southco], 2-21
Bracket, Latch, Shrd, Seat, 2-15
Bracket, Lip, Hppr, 2-65, 2-67
Bracket, Mtg, 2-9
Bracket, Mtg [FaST Gen 2+], 3-29
Bracket, Mtg [FaST], 3-21
Bracket, Mtg, Air Fltr, Dsl, 2-31
Bracket, Mtg, Cable, 2-53
Bracket, Mtg, Coolant, Tank, Dsl [2010], 2-29
Bracket, Mtg, Cover, Recvy Tank, 2-99
Bracket, Mtg, Cyl, 2-85, 2-89
Bracket, Mtg, Detgt And Spray Wand, 3-5
Bracket, Mtg, Ecu [M20/T20 2007], 2-29
Bracket, Mtg, Fan, 2-103
Bracket, Mtg, Fan, Shrd, Lower, Dsl, 2-43
Bracket, Mtg, Fan, Shrd, Upper, Dsl, 2-43
Bracket, Mtg, Fltr, Oil, Remote, 2-23
Bracket, Mtg, Govnr Control, Dsl, 2-29
Bracket, Mtg, Insulation, 2-9
Bracket, Mtg, Latch, Dsl, 2-39
Bracket, Mtg, Latch, Tank Cover, 2-91, 2-92
Bracket, Mtg, Lift, Scb Head, 2-73
Bracket, Mtg, Mirror, Rearview, 3-55
Bracket, Mtg, Motor, 2-103, 2-107
Bracket, Mtg, Prop Rod, 2-99
Bracket, Mtg, Radiator, 2-41, 2-43
Bracket, Mtg, Rocker Arm [Ku], 6-12
Bracket, Mtg, Scb Head, Lh, 2-73
Bracket, Mtg, Scb Head, Rh, 2-73
Bracket, Mtg, Sensor, 2-55
Bracket, Mtg, Sheave, Dsl, 2-33
Bracket, Mtg, Skirt, 2-75
Bracket, Mtg, Skirt, Brush Door, 2-83, 2-87
Bracket, Mtg, Skirt, Door, 2-83, 2-87
Bracket, Mtg, Skirt, Door, Brush, 2-83, 2-87
Bracket, Mtg, Sppt, 2-49
Bracket, Mtg, Spray Handle, 3-65
Bracket, Mtg, Spray Wand [FaST, Conv], 3-65
Bracket, Mtg, Spring, 2-73
Bracket, Mtg, Sqge, 3-7
Bracket, Mtg, Strainer, 3-5
Bracket, Mtg, Switch, 2-63
Bracket, Mtg, Vacuum Wand, 3-61
Bracket, Mtg, Valve, 2-97, 3-3
Bracket, Mtg, Valve [Combined], 2-133
Bracket, Mtg, Valve, Hyd, Scb, 2-131
Bracket, Mtg, Valve, Hyd, Swp, 2-131
Bracket, Mtg, Valve, Lower, 2-133
Bracket, Muffler, Hanger, Front, 2-37
Bracket, Pivot, Hppr Door, Rh, 2-65
Bracket, Propel, Dsl, 2-55
Bracket, Protector, Float Switch, 2-99
Bracket, Retainer, Lh, 2-69
Bracket, Retainer, Pump, 3-29
Bracket, Retainer, Rh, 2-71
Bracket, Retainer, Safety, 2-55
Bracket, Retainer, Shield, Heat, 2-37
Bracket, Retainer, Spring, 2-5
Bracket, Retaining, Hose, 2-95, 2-101, 3-67
Bracket, Rocker Arm, 5-12
Bracket, Seat, Adj, 2-15
Bracket, Shield, Heat, 2-21
Bracket, Shrd, Fan, Lh, 2-41
Bracket, Shrd, Fan, Rh, 2-41
Bracket, Shrd, Fan, Upper, Dsl, 2-41
Bracket, Shrd, Fan, Upper, Lh, 2-41
Bracket, Shrd, Radiator, Dsl, Ce, 2-43
Bracket, Soltn, Tank, Cntr, 2-91
Bracket, Spacer, Controlbox, 3-57
Bracket, Sppt, 2-41, 2-43, 2-69, 2-71
Bracket, Sppt, Alternator, Dsl, 2-33, 2-35
Bracket, Sppt, Cover, Tank, Recvy, 2-99
Bracket, Sppt, Radiator, Upper, 2-39
Bracket, Sppt, Strobe Light, 3-47, 3-49, 3-51
Bracket, Sppt, Tank, Lh, 2-99
Bracket, Sppt, Tank, Rh, 2-99
Bracket, Tank, Soltn, Lh, 2-91
Bracket, Tilt, Lh, 2-17
Bracket, Valve, Sba [M20 And T20], 3-15
Brake Assy, Drum, Mech, 07.0d 1.2w, 2-51
Brush Assy, Disk, Scb, 16.0d, Heavy Duty Polypropylene, 2-5
Brush Assy, Disk, Scb, 16.0d, Nylon, 2-5
Brush Assy, Disk, Scb, 16.0d, Super Abrasive, 2-5
Brush Assy, Disk, Scrub, 16.0 D, Heavy Duty Polypropylene (Replaced by 1220236), 2-5
Brush Assy, Disk, Scrub, 16.0 D, Super Abrasive (Replaced by 1221543), 2-5
Brush Assy, Disk, Scrub, 16.0D, Nylon (Replaced by 1220235), 2-5
Brush Assy, Disk, Sweep, 24.oD, Polypropylene (Replaced by 1220185), 2-5
Brush Assy, Disk, Swp, 24.0d, Polypropylene, 2-5
Brush Kit, Hub Assy, Drive, Ci [Hdpe In], 2-5
Brush Kit, Hub Assy, Drive, Ci [Uhmw], 2-5
Brush, Sweep / Scb, 40L, Heavy Duty Polypropylene, 2-3
Brush, Sweep / Scb, 40L, Polyester, 2-3
Brush, Sweep / Scb, 40L, Polypropylene, 2-3
Brush, Sweep / Scb, 40L, Super Abrasive, 2-3
Brush, Sweep / Scb, 40L, Wndw, Super Abrasive, 2-3
Brush, Sweep / Scb, 40L, Wndw, Polypropylene, 2-3
Brushholder, 6-19
Bumper Wldt, Brush, Side, 3-7, 3-9
Bumper, Rbr, 0.5d 0.16t M5 X 08, 2-55
Bumper, Rbr, 0.6d 0.34t .3d Tip, 2-127
Bumper, Sqge, 2-79
Bumper, Ure, 1.50d 1.25l, 3-69
Bush, Governor Gear, 5-3
Bush, Idle Gear, 5-15
Bush, Piston Pin, 5-17
Bushing, Eccentric, Adj, 2-95, 2-101
Bushing, Flng, 0.32b 0.50d 0.24l, Bnz, 2-81
Bushing, Flng, 0.50b 0.59d 0.38l, 2-95, 2-101
Bushing, Flng, 0.63b 0.75d 0.38l, 2-81, 2-83, 2-87
Bushing, Flng, 1.00b 1.13d 0.50l, 2-67, 2-77
Bushing, Gear, Gov [Ku], 6-3
Bushing, Gear, Idler [Ku], 6-15
Bushing, Pin, Piston [Ku]16241-21351, 6-17
Bushing, Pivot, Door, 2-65
Bushing, Sleeve, 0.37b 0.50d 0.50l, Oib, 2-53
Bushing, Sleeve, 0.50b 0.59d 0.50l, Bnz, 3-11
Bushing, Sleeve, 0.62b 0.72d 0.50l, Fgl, 2-81
Bushing, Sleeve, 0.63b 0.72d 0.38l, 2-85, 2-89
Bushing, Sleeve, 0.75b 0.88d 0.25l, 2-95, 2-101

Bushing, Sleeve, 0.75b 0.88d 0.75l, Tef, 2-65
Bushing, Sleeve, 0.78b 0.86d 0.93l, Bnz, 2-51
Bushing, Sleeve, 0.88b 1.00d 0.75l, Bnz, 2-57
Bushing, Sleeve, 1.00b 1.13d 1.50l, Fgl, 3-11
Button, Cntrl, Horn, 2-17
Bypass Valve Kit, Pump, Repair,, 4-27

C

Cable, 06ga 16.0l Red .38ring /.38ring, 2-33, 2-35
Cable, Battery, 02ga 48.0l Red .41ring, 2-47
Cable, Battery, 02ga 60.0l Blk .41ring, 2-47
Cable, Glv .06d 012.0l .26eye /.26eye, 3-69
Cable, Glv .09d 016.5l .38eye /.38eye, 2-19
Cable, Glv .13d 015.8l .50eye /.50eye, 2-85, 2-89
Cable, Push / Pull, 063.0l 4.0, .31-24, 2-53
Cable, Push / Pull, 098.0l .25-28/.25-28, 2-55
Cam, 2-79
Cam, Centering, Pintle, 2-55
Cam, Front, 3-9
Cam, Fuel, 5-13
Cam, Plt, Brake [Nickel], 2-51
Cam, Rear, 2-79
Camshaft, 6-13
Camshaft, Fuel, 5-13
Cap, 5-28
Cap Assy, Tank, Drain, 2-99, 4-3
Cap Screw, 4-8
Cap Screw Cl, 4-9
Cap, Arm, Lift, 2-63
Cap, Breather, Hyd, 2.4 Ds, 2-129
Cap, End, Valve, Steering, 4-25
Cap, Filler, Oil [Ku], 6-7, 6-10
Cap, Fuel, Tank, 2-27
Cap, Hub, Dust 2.57d 0.77l, 2-51
Cap, Radiator, 14Psi [Stant], 2-41, 2-43
Cap, Radiator, 15psi, 2-39
Cap, Screw, Idler [Ku], 6-26
Cap, Sealing, 5-3, 5-5, 6-5
Cap, Tank, 3-5
Cap, Tank, Fuel, 2.3neck 2.6d, 2-27
Cap, Valve, 5-12
Cap, Valve [Ku], 6-12
Cap, Vinyl, 57mmid X 23mml, 2-69, 2-71
Capacitor, Plug [4700uf, 25v], 3-46
Cartridge, Psi Cntrl, Valve, Hyd, 4-13, 4-15, 4-19, 4-21
Case, Main, Brg Assy, 6-9
Caster, Pivot, 2-81
Catch, Latch, Tank Cover, 2-91, 2-92
Chain, Str, 4/0, 08 Link, 2-77
Channel Wldt, Pivot, 3-11
Channel, Shield, Muffler [M20/T20 2007], 2-37
Channel, Upper, Tower, Lift, 2-7
Chech Valve Kit, Pump, Repair,, 4-27
Cir-clip, External, 5-12, 5-30
Cir-clip, Governor Shaft, 5-13
Cir-clip, Idle Gear, 5-15
Cir-clip, Piston Pin, 5-17
Circuitbreaker, 02.0a, Resetable, 3-37
Circuitbreaker, 2.0a, Resetable, 3-37
Clamp [Kubota], 6-8
Clamp Wldt, Front, 2-79
Clamp Wldt, Rear, 2-79
Clamp, Cable, Nyl, 0.62D, Nat, 3-57
Clamp, Cable, Ss, 0.50d X 0.50w [Insul], 4-29
Clamp, Cable, Ss, 1.12d X 0.38w, 1h, 2-97
Clamp, Cable, Ss, 2.50d X 1.00w, 1h, 2-9
Clamp, Cable, Ss, 2.50d X 1.00w, 1hole, 2-105
Clamp, Cable, Stl, 0.25D X 0.56W, 1Hole, 3-49, 3-51
Clamp, Cable, Stl, 0.44d X 0.62w, 1h, 2-127
Clamp, Cable, Stl, 0.69d X 0.62w, 1h, 2-39, 2-55
Clamp, Cable, Stl, 1.00d X 0.75w, 1h, 2-29, 2-31
Clamp, Cable, Stl, 1.50d X 1.00w, 1h, 2-9, 2-39, 2-47, 2-127, 3-21
Clamp, Cable, Stl, 1.50d X 1.00w, 1hole, 2-7, 2-45
Clamp, Hose, 5-10, 6-10
Clamp, Hose, Heater [Ku], 5-31, 6-29
Clamp, Hose, Plstc .351-.394 Id, 3-21
Clamp, Hose, Wir, .52 - .56, Yel, 4-29
Clamp, Hose, Wir, .63 - .66, Blk, 4-29
Clamp, Hose, Wormdrive, 0.25-0.62d, .31w, 2-39, 2-45, 3-3, 3-5, 3-29, 3-39
Clamp, Hose, Wormdrive, 0.31-0.88d, .31w, 2-27, 2-29, 2-47, 3-13, 3-19, 3-23, 3-25, 3-29, 3-31, 3-33, 3-39, 3-41, 3-43, 3-65
Clamp, Hose, Wormdrive, 0.56-1.06d, .56w, 2-23, 2-97, 3-3, 3-5, 3-13, 3-23, 3-25, 3-31, 3-33, 3-41, 3-43, 3-65
Clamp, Hose, Wormdrive, 0.81-1.50d, .50w, 2-39, 2-45
Clamp, Hose, Wormdrive, 1.25-2.00D, .50W, 2-37, 2-39, 2-45
Clamp, Hose, Wormdrive, 1.81-2.75d, .50w, 2-31
Clamp, Hose, Wormdrive, 2.50-3.50d, .50w, 2-79, 2-95, 2-101
Clamp, Hose, Wormdrive, 3.56-4.50d, .50w, 2-95, 2-101, 2-103, 2-107
Clamp, Hose, Wormdrive, 3.75-4.62d, .62w, 2-103
Clamp, Hyd, 0.50d, 2-69, 2-71
Clamp, Mtg, Fltr, Air, 2-31
Clamp, Muffler, 1.62d, 2-37
Clamp, Pipe, 6-20
Clamp, Pipe 1, 5-23
Clamp, Pipe 2, 5-23
Clamp, Tube, Inj, Pipe #1 [Ku], 6-20
Clevis, Adj, 0.25 Pin, 0.25-28 Rh, Pl, 2-53
Clevis, Adj, 0.25pin, 0.25-28left Pl, 2-53
Clevis, Adj, 0.31pin, 0.31-24, 2-53
Clip, .250h, Plstc [Pine-Tree], 2-21
Clip, Grip, Finger, .875-1.25, 3-65
Clip, Grip, Finger, 0.88-1.25d, 3-37
Clip, Grip, Finger, 1.00-1.88d White,Vyl, 3-61, 3-63
Clip, Keeper, Open, 2-41, 2-43
Clutch, 6-19
Clutch, Over Running, 5-21
Collar 1, 5-30
Collar, Crank, Front [Ku], 6-17
Collar, Crankshaft, 5-17
Collar, Gear [Ku], 6-15
Collar, Govnr [Ku], 6-28
Collar, Idle Gear 1, 5-15
Collar, Idle Gear 2, 5-15
Collet, Valve Spring, 5-12
Column, Pump, Water, 4-3
Column, Steering, 09.9L 0.86D 36Tooth, 2-17
Comp Idle Gear 1, 5-15
Comp. Case, Gear, 5-7
Comp. Crankshaft, 5-17
Comp. Flywheel, 5-19
Comp. Lever, Fork 1, 5-30
Comp. Lever, Governor, 5-29
Comp. Oil Pan (Rear Sump), 5-4
Comp. Weight, Governor, 5-13
Complete Pump Kit, Pump, Repair,, 4-27
Connector, Fem, 02cav, Mp280 Sealed, 4-27
Contact Kit, W/ Brush [En], 2-17
Control Box Assy Kit, Replmt, Telem [CAN], 3-57
Control Box Assy Kit, Replmt, Telem [USA], 3-57
Control, Fuel, 6-25
Control, Govnr [All Purpose], 2-29
Controller Kit, Replmt [Ec-H20], 4-29
Converter, Ele, 12-36 Vdc, 3-37
Cooler, Hyd, 25gpm 325btu Of12 13x12x2, 2-127
Cord, Ele, Glowplug, 6-20
Cord, Glow Plug, 5-23
Coupler, Pump, 4-7
Coupling, Drive, Flex, 09.5d / 13tooth, 2-23
Coupling, Nozzle, Spray, 3-65
Cover, 5-7, 5-21, 5-28, 6-7, 6-19
Cover Assy, Head, Cyl, 5-10
Cover Kit, Soltn Tank, Rh [M20 & T20], 2-91
Cover Kit, Switch, Float, Repair, 2-99
Cover Kit, Tank, Soltn, Lh, Replmt, 2-92
Cover Kit, Tank, Soltn, Lh, Replmt, Ce (Japan and CE Only), 2-92
Cover Kit, Tank, Soltn, Rh, Replmt, Ce (Japan and CE Only), 2-91
Cover Wldt [FaST], 3-21
Cover Wldt, Power Supply, 3-37

Cover, Backrest, 4-31
Cover, Bearing Case, 5-9
Cover, Breather, 5-10, 6-10
Cover, Brg Case, Eng [Ku], 6-9
Cover, Cushion, 4-31
Cover, Cyl Head Assy [Ku], 6-10
Cover, End, 4-7
Cover, Fork Lever Shaft, 5-30
Cover, Fuse, Block, 2-47
Cover, Hole, Pump [Ku], 6-23
Cover, Hole, Pump, Fuel [Ku], 6-23
Cover, Hppr, 2-61
Cover, Lever, Gov [Ku], 6-28
Cover, Lower, 2-15, 2-21
Cover, Oil Pump, 5-7
Cover, Pump, Oil, 6-7
Cover, Solenoid [Ku], 6-23
Cover, Tank, 2-99
Cover, Tank, Recvy, Trimmed, 2-99
Cover, Tank, Soltn, Lh, Trimmed, 2-92
Cover, Tank, Soltn, Lh, Trimmed, Ce (Japan and CE Only), 2-92
Cover, Tank, Soltn, Rh, Trimmed, 2-91
Cover, Tank, Soltn, Rh, Trimmed, Ce (Japan and CE Only), 2-91
Cover, Trimmed, 3-37
Crank Kit, Pump, F/79323, Replmt, 4-26
Crankcase, Comp [Ku], 6-7
Crankcase, Complt, 5-3
Crankcase, Complt [Ku], 6-3
Crankshaft, 6-17
Crankshaft Assy, 6-15
Crankshaft, Metal [Ku], 6-9
Crossmember Wldt [M20], 2-81
Cup Holder, Rwk, 2-13
Cylinder, Hyd, 1.5b 07.8l 02.75strk 2500, 2-65, 2-67, 3-11
Cylinder, Hyd, 1.5b 07.8l 02.80strk 2500, 2-73, 2-77, 2-85, 2-89, 3-11
Cylinder, Hyd, 2.0B 24.1L 15.00Strk 3000, 2-57
Cylinder, Hyd, 2.0b,15.2l,09.00strk,3000, 2-49

D

Detergent Pkg, 2 Liter, Sgl [665], 3-21
Detergent, Pkg, 2 Liter, Sgl [665], 3-29
Diaphragm Kit, Pump, Repair,, 4-27
Diode, Ele, Plug, 2-47
Dipstick, Oil [Ku], 6-4
Door Wldt, Brush, 2-69, 2-71
Door Wldt, Brush, Idler, 2-69, 2-71
Door Wldt, Brush, Lh, 2-89
Door Wldt, Brush, Rh, 2-85
Door Wldt, Hppr, 2-65, 2-67
Drive, 4-8
Drive [Cl], 4-9
Drive, Motor, Hyd, 4-5

E

Ear, Lifting, Eng [Ku], 6-5
ec-H2O Kit, Flush, Replmt[M20, M30&T20], 3-39
Electrode, 5 Plate, High Flow, 4-29
Electrode, Cylindrical, 4-29
Element, Fltr, Air [Dn], 1-1, 2-31
Element, Fltr, Air, Safety (Option), 2-31
Element, Fltr, Fuel [Dn], 1-1, 2-29
Element, Fltr, Oil, Spin-On, 2-24
Element, Fltr, Oil, Spin-On [Ku], 1-1
End Cap, 4-8
End Cap, Motor, Hyd [En], 4-9
Engine Assy, Dsl, 25hp [Ku V1505 Tier4f] (See Engine Breakdown), 2-23
Engine Assy, Dsl, 37Hp [Ku V1505] (See Engine Breakdown), 2-23
Engine Assy, Dsl, 37hp [Ku] (See Engine Breakdown), 2-23
Extinguisher Kit, Fire, Ci [M20 And T20], 3-70
Extinguisher, Fire, 2.5 Lb Dry, 3-70
Eye, Joint [Ku], 6-23

F

Fan Kit, Scrub, Replmt [M20/T20], 2-103
Fan Wldt, Vac, Inlet, 2-107
Fan, Cooling, 14.1d, 6 Blade, 0.5b Taper, 2-33, 2-35
FaST Kit, Ci [inj Rebld, M30/M20 III], 4-32
FaST Kit, Ci, Injector Filters[FaST Ii+], 4-32
FaST Kit, Injector [M20/T20/M30 FaST III] (See Breakdowns), 3-29
FaST Kit, Injector [M20/T20/m30 FaST III}, 4-32
FaST Kit, Seal, injector, Ci [FaST III], 4-32
Filter Assy, Air, 2-31
Filter Assy, Air, Mold, Ure, 3-21
Filter Assy, Fuel, Dsl, 2-29
Filter Assy, Hyd, 10mic, 1-1, 2-129
Filter, Foam, Rbr, 1.20d, 1.0l, 3-23, 3-25
Filter, In-Line, Pf06/Pf06 080mesh 02.6l, 3-29, 3-39
Filter, In-Line, Pf06/Pf06, 80 Mesh, 3-19
Filter, Oil [Ku], 6-4
Filter, Panl, Syn, 4.2 X 20.0 X 30.0, 1-1, 2-61
Filter, Screen, 50 Mesh .59d .8l Ss, 3-19
Filter, Soltn, 020mesh, Pm12 3.2d 08.0l, 3-5
Filter, Soltn, 20mesh, Pm12 3.1d 02.6l, 1-1, 2-92
Fitting Assy, Orifice, 0.070b, Pf04/Pf04, 3-19
Fitting Assy, Orifice, 0.093b, Pf04/Pf04, 3-19
Fitting Assy, Qdc, Pf04, 3-39
Fitting Kit, Hose, Garden, 3-3
Fitting, Brs, Breather [02mp], 2-63
Fitting, Brs, E45, Pf02/Pm02, 2-23
Fitting, Brs, E90, Bm08/Pm04, 3-19
Fitting, Brs, E90, Cf03/Pf02, 3-21
Fitting, Brs, E90, Em05/Pm02, 2-29
Fitting, Brs, E90, Em05/Pm04, 2-27
Fitting, Brs, E90, Pm02/Bm03, 2-27, 2-63, 3-5
Fitting, Brs, Qdc, Bm12/Qf08, 3-3
Fitting, Brs, Qdc, Pf08 [Parker Bh3f], 3-3
Fitting, Brs, Snubber, Pm02/Pf02, 3-39
Fitting, Brs, Str, Bm03/Pm02, 2-63
Fitting, Brs, Str, Bm04/Pm02, 3-21
Fitting, Brs, Str, Bm08/Pm04, 3-19
Fitting, Brs, Str, If05/Pm04, 2-29
Fitting, Brs, Str, Pf02/Pm04, 3-19
Fitting, Brs, Str, Pf02/Pm06, 3-39
Fitting, Brs, Str, Pf04/Pm06, Bshg, 2-39, 2-45
Fitting, Brs, Str, Pf06/Pf06 Bh, 3-65
Fitting, Brs, Str, Pf06/Pm12, 3-65
Fitting, Brs, Str, Pm04/Pm04, 3-19
Fitting, Brs, Str, Pm08/Garden Hose, 3-65
Fitting, Brs, Tee, Pf04/Pf04/Pf04, 3-19
Fitting, Brs, Tee, Pf04/Pf04/Pm04, Run, 3-29
Fitting, Draincock [Ku], 6-3
Fitting, Draincock, E90, .25npt, 2-39, 2-45
Fitting, E, Gr, 4-3
Fitting, Fltr, Oil [Ku], 6-7
Fitting, Fuel [Ku], 6-20
Fitting, Grease, Str Pm04 .47l, 2-57, 2-65, 2-67, 2-73, 2-81
Fitting, Grease, Str Pm04 .63l, 2-49
Fitting, Hyd, Cap, Jf04, 2-127
Fitting, Hyd, Cap, Jf08, 2-127, 3-15
Fitting, Hyd, E45, Jf08/Jm08, 2-133
Fitting, Hyd, E45, Jf10/Jm10, 2-115
Fitting, Hyd, E45, Jm04/Om04, 3-15
Fitting, Hyd, E45, Jm04/Om06, 2-49, 2-57
Fitting, Hyd, E45, Jm06/Om04, 2-103
Fitting, Hyd, E45, Jm06/Om06, 2-49, 2-131
Fitting, Hyd, E45, Jm08/Om08, 2-103, 2-131, 2-133, 3-15
Fitting, Hyd, E45, Jm08/Om10, 2-105, 2-125
Fitting, Hyd, E45, Jm10/Om12, 2-49
Fitting, Hyd, E45, Jm12/Om16, 2-129
Fitting, Hyd, E45, Jm20/Om20, 2-129
Fitting, Hyd, E90, Jf04/Jm04, 2-71, 2-131, 3-15
Fitting, Hyd, E90, Jf06/Jm06, 3-15
Fitting, Hyd, E90, Jf08/Jm08, 2-17, 2-127
Fitting, Hyd, E90, Jm04/Om04, 2-65, 2-67, 2-77, 2-85, 2-89, 2-131, 2-133, 3-11
Fitting, Hyd, E90, Jm04/Om06, 2-57
Fitting, Hyd, E90, Jm04/Pm02, 2-129
Fitting, Hyd, E90, Jm06/Om04, 2-73, 2-105, 2-107, 3-11
Fitting, Hyd, E90, Jm06/Om06, 2-17, 2-131, 2-133, 3-15
Fitting, Hyd, E90, Jm06/Om06, L, 2-131
Fitting, Hyd, E90, Jm06/Om06, Long, 2-133
Fitting, Hyd, E90, Jm06/Om08, 2-125

Fitting, Hyd, E90, Jm08/Om08, 2-69, 2-71, 2-107, 2-125, 2-131, 3-15
Fitting, Hyd, E90, Jm08/Om08, L, 2-131
Fitting, Hyd, E90, Jm08/Om08, Long, 2-133
Fitting, Hyd, E90, Jm08/Om10, 3-7, 3-9
Fitting, Hyd, E90, Jm08/Om16 Metric, 2-23
Fitting, Hyd, E90, Jm08/Pm08, 2-23
Fitting, Hyd, E90, Jm10/Om12, 2-125
Fitting, Hyd, E90, Jm12/Om12, 2-127
Fitting, Hyd, E90, Jm12/Om12, L, 2-127
Fitting, Hyd, E90, Om04/Qm04, 2-131, 2-133, 3-15
Fitting, Hyd, Plug, Jm08, 2-23
Fitting, Hyd, Plug, Om04, 2-133, 4-11, 4-19, 4-21, 4-23
Fitting, Hyd, Plug, Om06, 2-129, 2-133
Fitting, Hyd, Plug, Om08, 4-7, 4-19
Fitting, Hyd, Plug, Om10, 2-129
Fitting, Hyd, Rst, Jf04/Jm04, .028, 2-57
Fitting, Hyd, Rst, Spcl, 2-85, 2-89
Fitting, Hyd, Str, Jf04/Qm04, 2-131, 3-15
Fitting, Hyd, Str, Jf06/Jm04, 2-127
Fitting, Hyd, Str, Jm04/Om04, 2-69, 2-71, 2-131, 2-133, 3-15
Fitting, Hyd, Str, Jm04/Om06, 3-15
Fitting, Hyd, Str, Jm06/Om04, 2-107
Fitting, Hyd, Str, Jm06/Om06, 2-17, 2-129, 3-15, 3-17
Fitting, Hyd, Str, Jm06/Om06, L, 2-17
Fitting, Hyd, Str, Jm06/Om06, Long, 2-133, 3-17
Fitting, Hyd, Str, Jm08/Om06, 2-17
Fitting, Hyd, Str, Jm08/Om08, 2-107, 2-125, 2-129, 3-15
Fitting, Hyd, Str, Jm08/Om10, 2-105, 3-7
Fitting, Hyd, Str, Jm08/Pm08, 2-23
Fitting, Hyd, Str, Jm10/Om10, 2-131
Fitting, Hyd, Str, Jm10/Om10, Long, 2-133
Fitting, Hyd, Str, Jm10/Om12, 2-49
Fitting, Hyd, Str, Jm20/Om16, 2-125
Fitting, Hyd, Str, Metric, Om10/If05, 2-29
Fitting, Hyd, Str, Om04/Qm04, 2-131, 3-15
Fitting, Hyd, Str, Pf02/Pm04, 2-27, 2-29
Fitting, Hyd, Str, Pm02/Pm02, 2-29
Fitting, Hyd, Str, Spcl, 2-23
Fitting, Hyd, Tee, Jf06/Jm06/Jm06, Run, 2-107
Fitting, Hyd, Tee, Jf08/Jm08/Jm08, Br, 2-105
Fitting, Hyd, Tee, Jm06/Jm06/Om06, Run, 2-131, 3-17
Fitting, Hyd, Tee, Jm08/Jm08/Om08, Br, 2-103, 2-131, 2-133
Fitting, Nyl, Qdc, E90, Bm08/ Qm10, 3-29, 3-39
Fitting, NylY, Qdc, E90, Bm06/ Qm10, 3-29
Fitting, Pipe, E90, Pf02/Pm02, 3-21
Fitting, Pipe, Plug [Ku], 5-31, 6-3, 6-5, 6-7, 6-29
Fitting, Pipe, Plug, Pm02, Sq Head, 2-27
Fitting, Pipe, Plug, Pm08, Sq Head, 2-97
Fitting, Pipe, Water [Ku], 5-8, 5-31, 6-8
Fitting, Plstc, Body, Spray, Pf04, 3-19
Fitting, Plstc, Cap, Pf12 Hex, 2-97
Fitting, Plstc, Cap, Spray, Pf04, 3-19
Fitting, Plstc, E90, Bm05/Bm05, Nyl, 3-39
Fitting, Plstc, E90, Bm06/Bm06, 3-5, 4-29
Fitting, Plstc, E90, Bm06/Pm04, Nyl, 3-29
Fitting, Plstc, E90, Bm06/Pm12, Nyl, 3-3
Fitting, Plstc, E90, Bm08/Bm08, 3-39
Fitting, Plstc, E90, Bm08/Pf08s, Swivel, 3-19, 3-65
Fitting, Plstc, E90, Bm08/Pm04, 3-39
Fitting, Plstc, E90, Bm08/Pm06, 3-39, 3-65
Fitting, Plstc, E90, Bm08/Pm12, Nyl, 3-19, 3-23, 3-25, 3-29, 3-39
Fitting, Plstc, E90, Bm10/Pm08, 3-3
Fitting, Plstc, E90, Bm10/Pm12, 3-3, 3-29, 3-39
Fitting, Plstc, E90, Bm12/Pf12, 3-5
Fitting, Plstc, E90, Bm12/Pm08, 3-3
Fitting, Plstc, E90, Bm12/Pm12, 3-3, 3-5, 3-19, 3-29, 3-39
Fitting, Plstc, E90, Pf Bm [Es Pump], 4-3
Fitting, Plstc, E90, Pf12/Pm12, 2-92
Fitting, Plstc, Pf12/Pf12, Bh, 2-92, 3-3
Fitting, Plstc, Pipe, Cap, Pf04, 3-21, 3-29, 4-29
Fitting, Plstc, Rst, .50od /.13id, 3-25
Fitting, Plstc, Str, Bm04, Cplg, Fem, 3-21, 3-29
Fitting, Plstc, Str, Bm04/Bm08, 3-39
Fitting, Plstc, Str, Bm04/Pm04, 3-39
Fitting, Plstc, Str, Bm05/Pm04, 3-39
Fitting, Plstc, Str, Bm06/Bm08, 3-43
Fitting, Plstc, Str, Bm06/Pm04, 3-29, 4-29
Fitting, Plstc, Str, Bm06/Pm06, 3-29
Fitting, Plstc, Str, Bm08/Pf08s, Swivel, 3-65
Fitting, Plstc, Str, Bm08/Pm06, 3-19
Fitting, Plstc, Str, Bm08/Pm12, 3-23, 3-25
Fitting, Plstc, Str, Bm10/Bm10, 2-97
Fitting, Plstc, Str, Bm10/Bm12, 2-97
Fitting, Plstc, Str, Bm10/Pm12, 2-97
Fitting, Plstc, Str, Bm12/Bm12, 2-97
Fitting, Plstc, Str, Bm12/Pm08, Nyl, 3-3, 4-3
Fitting, Plstc, Str, Bm12/Pm12, 2-97
Fitting, Plstc, Str, Pf06/Qm10, Pvc, 3-39
Fitting, Plstc, Str, Pm02/Bm05, 4-29
Fitting, Plstc, Str, Pm04, Cplg, Mal, 3-21, 3-29
Fitting, Plstc, Str, Pm04/Pm06, Nyl, 3-39
Fitting, Plstc, Str, Pm08/Pm08, 3-3
Fitting, Plstc, Str, Pm12/Pm12 1.60l, 3-3, 3-19, 3-29, 3-39
Fitting, Plstc, Tee, Bm04/Bm04/Bm04, 3-29
Fitting, Plstc, Tee, Bm04/Bm08/Bm08, Br, 3-19
Fitting, Plstc, Tee, Bm06/Pm02/Bm06, 4-29
Fitting, Plstc, Tee, Bm08/Bm08/Bm08, 3-19
Fitting, Plstc, Tee, Bm08/Bm10/Bm10, Br, 3-31, 3-33, 3-41, 3-43, 3-65
Fitting, Plstc, Tee, Bm08/Bm12/Bm12, Br, 3-23, 3-25, 3-31, 3-33, 3-41, 3-43, 3-65
Fitting, Plstc, Tee, Bm10/Bm10/Bm10, Nyl, 3-13
Fitting, Plstc, Tee, Bm12/Bm12/Bm12, 2-97, 3-13
Fitting, Plstc, Tee, Pf08/Pf08/Pf08, 3-3
Fitting, Plstc, Tee, Pf12/Pf12/Pf12, 3-3, 3-19, 3-29, 3-39
Fitting, Plstc, Y, Bm08/Bm08/Bm08, Nyl, 3-25, 3-29, 3-33, 3-43
Fitting, Plug [Ku], 6-3
Fitting, Plug, Org, #6, Valve [Cec], 4-11, 4-13, 4-15, 4-17, 4-19, 4-21, 4-23
Flange Mounting, 4-8
Flange, Motor, Hyd [En], 4-9
Flange, Pump, Water [Ku], 5-8, 6-8
Flange, Sleeve, 5-27
Flange, Sleeve [Ku], 6-25
Flange, Water [Ku], 5-31, 6-29
Flap, Battery, 2-13
Flapper, Valve, Pump, Water, 4-3
Flywheel, 6-18
Follower, Screw, Pump, Injection[Ku], 6-23, 6-25
Frame Wldt, Lift, Hppr, 2-57
Frame Wldt, Main, Replmt [m20 & T20], 2-7
Frame Wldt, Sqge, Lh, 2-87
Frame Wldt, Sqge, Rh, 2-83
Frame Wldt, Sqge, Side Brush, 3-7
Frame, Drive End, 5-21
Frame, End, 5-21, 6-19
Frame, End, Drive, 6-19
Fuel Pump Cover Plate, 5-25
Fuelline, .31d 04.0l 05if/05if, Stl, 2-29
Fuse, 015a, 2-47

G

Gasket, 5-3, 5-4, 5-10, 5-23, 5-27, 5-28, 5-29, 5-30, 5-31, 6-3, 6-29
Gasket [Ku], 6-11, 6-20, 6-26
Gasket Ku, 5-11
Gasket Set, 6-4
Gasket Set, Lower, 5-4
Gasket Set, Upper, 5-5, 6-5
Gasket, .25 1.88d 1.0id [Poron], 4-3
Gasket, 2.00, 07.87w 10.24l, Adh, 2-105
Gasket, 3.23id 3.63od .16th, Ure, 2-99
Gasket, 4.05id 5.29od .19 [Buna], 2-99, 4-3
Gasket, Bearing Case, 5-9
Gasket, Bearing Case Cover, 5-9
Gasket, Bearing, Case [Ku], 6-9
Gasket, Case, Gear [Ku], 6-7, 6-9
Gasket, Cover, Fuse Block, 2-47
Gasket, Cover, Gov [Ku], 6-28
Gasket, Cover, Head, Cyl [Ku], 6-10
Gasket, Cover, Recvy Tank, 2-99

Gasket, Cover, Spd [Ku], 6-27
Gasket, Cyclinder Head, 5-5
Gasket, Delivery Valve, 5-27
Gasket, Ex-manifold, 5-11
Gasket, F/ Bolt [Ku], 6-10, 6-20, 6-26, 6-27
Gasket, F/ Screw [Ku], 6-23, 6-25
Gasket, Foam, .50, 14.76id 16.54od, Adh, 2-105
Gasket, Ftg, Banjo [Ku], 6-23, 6-25
Gasket, Fuel Pump, 5-25
Gasket, Gear Case, 5-7
Gasket, Head Cover, 5-10
Gasket, Head, Cyl [Ku], 6-5
Gasket, Hppr, Transition, 2-107
Gasket, Hsg, Thermostat [Ku], 5-31, 6-29
Gasket, Manifold, Exhaust, 6-11
Gasket, Manifold, Intake [Ku], 5-11
Gasket, Manifold, Intake [Ku], 6-11
Gasket, Oil Pan, 5-4
Gasket, Pan, Oil, 6-4
Gasket, Plt, Hose, Vacuum, 2-103
Gasket, Pump, Fuel [Ku], 6-23
Gasket, Pump, Water [Ku], 6-8
Gasket, Sender, Fuel, 2-27
Gasket, Solenoid, Throttle [Ku], 2-23, 6-23
Gasket, Sqge, 1-1, 2-79
Gasket, Thrtl Blk, 5-28
Gasket, Valve, Injector [Ku], 6-25
Gasket, Water Pump, 5-8
Gasspring, 180lb, 03.0strk, 2-15
Gauge, Oil, 5-4
Gauge, Oil [Ku], 6-4
Gauge, Sensing, Level, 2-129
Gear, 5-21, 6-19
Gear, Camshaft, 5-15
Gear, Camshaft [Ku], 6-15
Gear, Crankshaft, 5-17
Gear, Cshft [Ku], 6-17
Gear, Governor, 5-13
Gear, Govnr [Ku], 6-13
Gear, Idler, Cam [Ku], 6-15
Gear, Injection Pump, 5-13
Gear, Injection, Pump [Ku], 6-13
Gear, Oil Pump Drive, 5-17
Gear, Pump, Oil [Ku], 6-17
Gear, Ring, 5-19
Gear, Ring [Ku], 6-18
Geroler, Motor, Hyd, 4-5
Gerotor Set, 4-8
Gerotor Set [Cl], 4-9
Glowplug [Ku], 6-20
Grill Wldt, Front, 2-19
Grill, Eng, 2-21
Grill, Side, 2-15
Grip, Handle, 2-95, 2-101
Grommet, Blind, 4-29
Grommet, Pye, 0.37id, F/1.5h, .13 Matl, 3-5
Grommet, Rbr, 0.38id, F/0.5H, .12 Matl, 3-57
Grommet, Rbr, 0.50id, F/0.8h, .12 Matl, 3-52, 3-53
Grommet, Rbr, 0.62id, F/0.9h, .06 Matl, 2-63, 3-37
Grommet, Rbr, 0.62id, F/0.9h, .12 Matl, 3-5
Grommet, Rbr, 1.06id, F/1.4h, .19 Matl, 2-63
Grommet, Rbr, 1.50id, F/1.8h, .19 Matl, 2-63
Grommet, Rbr, 2.13id, F/2.5h, .12 Matl, 3-19, 3-29, 3-39
Guard Kit, Sqge, Ci [M20], 3-69
Guard Wldt, Sqge, 3-69
Guard Wldt, Brush, Side, 3-13
Guard Wldt, Pntd [M20/T20], 3-69
Guard Wldt, Sqge [M20/T20 Lh, M30 Rh], 3-69
Guard Wldt, Sqge [M20/T20 Rh, M30 Lh], 3-69
Guard Wldt, Sqge [M20/T20/M30], 3-69
Guard Wldt, Top, Ohg, 3-55
Guide Assy, Oil Gauge, 5-4
Guide, Exhaust Valve, 5-5
Guide, Inlet Valve, 5-5
Guide, Valve, Exhaust, 6-5
Guide, Valve, Inlet, 6-5

H

Handle Wldt, Drain, 2-99
Handle, Valve, Pinch, Lh, 2-101
Handle, Valve, Pinch, Rh, 2-95
Harness [FaST, M20 And T20], 3-27
Harness, Engine, Dsl [M20 T20], 2-174
Harness, Headlight [M20 And T20], 2-166
Harness, Hppr [M20], 2-169
Harness, Hppr [M20/M30], 2-169
Harness, Hppr, Cover [M20], 2-171
Harness, Jumper [Deutsch To Mpack], 4-17, 4-23
Harness, Main [M20], 2-165
Harness, Spray, Nozzle, 3-65
Harness, Warning / Backup [M20 & T20], 3-47, 3-49, 3-51
Harness, Warning / Ohg [M20], 3-52, 3-53
Harness, Wire [Ec-H2o, Mako, 2.0l & Dsl], 3-46
Harness, Wire [Ec-H2o], 3-46
Harness, Wire [FaST Gen 2], 3-35
Harness, Wire, Dsl [M20/T20, Telemetry], 3-59
Head, Cyl, W/O Valve [Ku], 5-5
Head, Cyl, W/O Valves, 5-5
Head, Cylinder [Ku], 6-5
Headlight, 12vdc, 27watt, 2.1a, Oval (Rpl by 1060942), 2-7
Headlight, 12Vdc, Oval, Halogen, 2-7
Hinge Kit, Cover, Tank, Recvy, Replmt, 2-99
Hinge Wldt, Shrd, Lh, 2-21
Hinge Wldt, Shrd, Rh, 2-15
Hinge, .38pin .11 3.5w 06.0l 6/0.38sl, 2-19
Hinge, .50pin .19 4.0w 06.0l 3/0.44sl, 2-85, 2-89
Holder,, 5-13
Holder, Delivery Valve, 5-27
Holder, Gear [Ku], 6-13
Holder, Governor Gear, 5-13
Holder, Govnr [Ku], 6-13
Holder, Valve, Inj [Ku], 6-25
Hook, Engine 1, 5-5
Hook, Engine 2, 5-5
Hopper, Debris, Rm-Hg, Trimmed, 2-59
Horn, 12vdc, Dba [Wolo], 2-47
Hose Assy, Sqge, 2-99
Hose Assy, W/1cuff, 1.0d 09l 1.0/, 2-59
Hose Assy, W/2cuff, 1.5d 084l [Vacwand], 3-63
Hose Assy, W/2cuff, 1.5d 84l [Vacwand], 3-61
Hose Kit, Hyd, Propel, Ci [M20/T20], 2-115
Hose, 0050, 04, If05str / Im05str, 10.0, 2-29
Hose, 0300, 08, Jf08str / None, 19.0, 2-23
Hose, Afmkt, Coolant Recvy, 05ft, 2-39
Hose, Afmkt, Coolant Recvy, 08ft, 2-45
Hose, Afmkt, Pvc, Brd 0.38id 02ft, 3-5
Hose, Afmkt, Pvc, Brd 0.50id 02ft, 3-23
Hose, Afmkt, Pvc, Brd 0.50id 03ft, 3-19
Hose, Afmkt, Pvc, Brd 0.50id 08ft, 3-19, 3-25
Hose, Afmkt, Pvc, Brd 0.62id 08ft, 3-13
Hose, Afmkt, Pvc, Brd 0.62Id, 01Ft, Clr, 3-5
Hose, Afmkt, Pvc, Brd 0.75id 01ft, 3-5
Hose, Afmkt, Pvc, Brd 0.75id 08ft, 2-97, 3-3, 3-13
Hose, Afmkt, PVC, Brd, 0.31Id, 03Ft, Clr, 3-39, 4-29
Hose, Afmkt, Pvc, Brd, 0.38id, 01ft, Clr, 4-29
Hose, Afmkt, Pvc, Brd, 0.38id, 02ft, Clr, 3-43, 4-29
Hose, Afmkt, Pvc, Brd, 0.38id, 03ft, Clr, 3-29
Hose, Afmkt, Pvc, Brd, 0.50id, 01ft, Clr, 3-29, 3-39
Hose, Afmkt, Pvc, Brd, 0.50id, 03ft, Clr, 3-33
Hose, Afmkt, Pvc, Brd, 0.50id, 08ft, Clr, 3-31, 3-33, 3-43
Hose, Afmkt, Pvc, Brd, 0.50id, 12ft, Clr, 3-39, 3-41
Hose, Afmkt, Pvc, Brd, 0.62id, 01ft, Clr, 2-97
Hose, Afmkt, Pvc, Brd, 0.62id, 03ft, Clr, 3-33, 3-43
Hose, Afmkt, Pvc, Brd, 0.62id, 08ft, Clr, 2-97, 3-31, 3-41
Hose, Afmkt, Pvc, Brd, 0.75id, 08ft, Clr, 3-31, 3-41, 3-65
Hose, Afmkt, Pvc, Clr 0.25id 03ft, 3-21
Hose, Afmkt, Pvc, Clr 0.38id 03ft, 2-29
Hose, Afmkt, Pvc, Clr 0.50id 08ft, 3-25
Hose, Afmkt, Pvc, Clr, 0.25id, 02ft, 3-29
Hose, Afmkt, Pvc, Clr, 0.25id, 03ft, 3-39
Hose, Afmkt, Pvc, Clr, 0.38id, 01ft, 3-29

Hose, Afmkt, Pvc, Clr, 0.38id, 03ft, 3-29
Hose, Afmkt, Pvc, Clr, 0.50id, 08ft, 3-33
Hose, Afmkt, Pvc, Wir, 0.50id, 03ft, Clr, 3-29
Hose, Afmkt, Vacuum, 0.16id, 01ft, 3-5
Hose, Afmkt, Vacuum, 0.16id, 03ft, 2-63
Hose, Air- Intk, Flex 4.00id 24.0l, 2-103
Hose, Drain, 3.00id X 48.0l, 2-95, 2-101
Hose, Flex, Vacuum, 3.5d 32.0l, 2-107
Hose, Fuel [Ku], 6- 20
Hose, Fuel, 0.18id 29.0l, 2-29
Hose, Fuel, 0.31id 22.0l, 2-29
Hose, Fuel, 0.50id 21.0l, 2-27
Hose, Heater, E90, 0.62id, 24.0 4.0, 3-33, 3-43
Hose, Hyd, Med04, Jf04e90/Jf04str, 016.0, 2-121
Hose, Hyd, Med06, Jf06e90/Jf06str, 042.0, 2-117
Hose, Hyd, Med06, Jf06e90l/Jf06str,038.0, 3-17
Hose, Hyd, Med06, Jf06str/Jf06str, 018.0, 2-117
Hose, Hyd, Med06, Jf06str/Jf06str, 022.0, 2-117, 2-119
Hose, Hyd, Med06, Jf06Str/Jf06Str, 042.0, 2-117, 2-119
Hose, Hyd, Med08, Jf08e45/Jf08str, 029.0, 2-121
Hose, Hyd, Med08, Jf08e90/Jf08str, 031.0, 2-117
Hose, Hyd, Med08, Jf08e90/Jf08str, 032.0, 2-23
Hose, Hyd, Med08, Jf08str /Jf08e45, 21.0, 2-117, 2-119
Hose, Hyd, Med08, Jf08str/Jf08str, 022.0, 2-121
Hose, Hyd, Med10, Jf10str/Jf10str, 41.0, 2-117
Hose, Hyd, Med10, Jf10Str/Jf10Str, 036.0, 2-117, 2-119
Hose, Hyd, Med12, Jf12e90/Jf12str, 029.0, 2-117, 2-119
Hose, Hyd, Med12, Jf12str/Jf12str, 060.0, 2-117, 2-119
Hose, Hyd, Spcl, Jf04str/Jf04str, 115.0, 2-121
Hose, Hyd, Spcl, Jf04str/Jf04str, 121.0, 2-121, 2-123
Hose, Hyd, Spcl, Jf04str/Jf04str, 127.0, 2-121
Hose, Hyd, Spcl, Jf04str/Jf04str, 133.0, 2-121
Hose, Hyd, Spcl, Jf04str/Jf06str, 125.0, 2-123
Hose, Hyd, Spcl, Jf10e90/Jf10str, 63.0, 2-115
Hose, Hyd, Spcl, Jf10str/Jf10str, 56.5, 2-115
Hose, Hyd, Suc20, Jf20str /Jf20e90, 30.0, 2-117, 2-119
Hose, Hyd, Tc 06, Jf06str /Jf06e45, 56.0, 2-121
Hose, Hyd, Tc04, Jf04e45/Qm06, 026.0, 2-123
Hose, Hyd, Tc04, Jf04e45/Qm06, 028.0, 2-123
Hose, Hyd, Tc04, Jf04e90/Jf04str, 020.0, 2-121
Hose, Hyd, Tc04, Jf04str /Jf04e90, 70.0, 2-121
Hose, Hyd, Tc04, Jf04str /Jf04e90, 88.0, 2-121
Hose, Hyd, Tc04, Jf04str /Jf04str, 20.0, 3-17
Hose, Hyd, Tc04, Jf04str /Jf04str, 39.0, 3-17
Hose, Hyd, Tc04, Jf04str/Jf04str, 096.0, 2-121
Hose, Hyd, Tc06, Jf06e90/Jf06str, 040.0, 2-115
Hose, Hyd, Tc06, Jf06e90/Jf06str, 104.0, 2-115
Hose, Hyd, Tc06, Jf06str /Jf06e45, 54.0, 2-121
Hose, Hyd, Tc06, Jf06str /Jf06e90, 74.0, 3-17
Hose, Hyd, Tc06, Jf06str /Jf06str, 23.0, 3-17
Hose, Hyd, Tc06, Jf06str/Jf06str, 033.0, 3-17
Hose, Hyd, Tc06, Jf06str/Jf06str, 054.0, 2-121
Hose, Hyd, Tc06, Jf06Str/Jf06Str, 062.0, 3-17
Hose, Hyd, Tc06, Jf06str/Jf06str, 086.0, 3-17
Hose, Hyd, Tc08, Jf08e45/Jf08str, 018.0, 2-121
Hose, Hyd, Tc08, Jf08E45/Jf08Str, 026.0, 2-117, 2-119
Hose, Hyd, Tc08, Jf08e45/Jf08str, 26.0, 2-117
Hose, Hyd, Tc08, Jf08e45/Jf08str, 96.0, 2-115
Hose, Hyd, Tc08, Jf08e90/Jf08str, 024.0, 2-117
Hose, Hyd, Tc08, Jf08E90/Jf08Str, 029.0, 2-117
Hose, Hyd, Tc08, Jf08e90/Jf08str, 034.0, 3-17
Hose, Hyd, Tc08, Jf08e90/Jf08str, 046.0, 2-117, 2-119
Hose, Hyd, Tc08, Jf08e90/Jf08str, 056.0, 3-17
Hose, Hyd, Tc08, Jf08e90/Jf08str, 13.0, 2-121
Hose, Hyd, Tc08, Jf08str/Jf08e90, 012.0, 3-15
Hose, Hyd, Tc08, Jf08str/Jf08e90, 031.0, 2-117, 2-119
Hose, Hyd, Tc08, Jf08Str/Jf08Str, 021.0, 2-117, 2-119
Hose, Hyd, Tc08, Jf08str/Jf08str, 024.0, 2-117
Hose, Hyd, Tc08, Jf08str/Jf08str, 031.0, 2-117, 2-119
Hose, Hyd, Tc08, Jf08str/Jf08str, 034.0, 3-17
Hose, Hyd, Tc08, Jf08str/Jf08str, 056.0, 3-17
Hose, Hyd, Tc08, Jf08str/Jf08str, 084.0, 3-17
Hose, Hyd, Tc08, Jf08str/Jf08str, 21.0, 2-117
Hose, Hyd, Tc08, Jf08str/Jf08str, 48.0, 2-121
Hose, Hyd, Tc12, Jf12e90/Jf12str, 044.0, 2-117
Hose, Hyd, Tco4, Jf04Str/Qm06, 028.0, 2-123
Hose, Hyd,Med04, Jf04str/Jf04str, 066.0, 2-115
Hose, Hyd,Med12, Jf12str/Jf12str , 66.0, 2-117
Hose, Hyd,Tc 04, Jf04str /Jf04e45 , 35.0, 2-123
Hose, Intake, Mold, 1.75id 1.75id Dsl, 2-31
Hose, Intake, Mold, 2.00id [Epdm], 2-31
Hose, Pvc, Brd, 0.62id 0.88od 09.00l, 3-3
Hose, Pvc, Clr, 0.38id 0.56od 22.00l, 2-39
Hose, Pvc, Clr, 0.38id 0.56od 48.00l, 3-3, 3-5
Hose, Pvc, Clr, 0.38id 0.56od 022.0l, 2-45
Hose, Pvc, Clr, 0.50id 0.69od 26.00l, 3-13
Hose, Pvc, Clr, 0.50id 0.69od 30.00l, 2-47
Hose, Radiator, Lower, Dsl, 2-39, 2-45
Hose, Radiator, Lower, Dsl (Cut to fit), 2-45
Hose, Radiator, Upper, Dsl, 2-39, 2-45
Hose, Rbr, E90 1.25id 1.25id 04.2 03.1, 2-39
Hose, Rbr, E90, 1.25id 1.25id 04.2 03.1, 2-45
Hose, Vacuum, 19.0l, 2-79
Hose, Water [Ku], 5-31, 6- 29
Hose, Water, Coil, 3-65
Housing, 4-7
Housing Assy, Nozzle, 5-23, 6- 20, 6- 21
Housing Assy, Vacfan, Scrbr, 2-103
Housing Assy, Vacfan, Swpr, 2-107
Housing Kit, Drive, Front, Replmt, 2-49
Housing Kit, Pump, Water, 4-3
Housing Wldt, Brush, Drive, 2-69, 2-71
Housing Wldt, Swp, Scb, 2-73
Housing Wldt, Vacfan, Front [528], 2-103
Housing, Bottom, 4-29
Housing, Brg, Motor, Hyd, 4-5
Housing, Cplg, Qf / Pm08, 3-39
Housing, Fan, Radial Discharge, Sq Inlet, 2-105
Housing, Flywheel, Mach [1505, Kubo], 2-23
Housing, Motor, Hyd [En], 4-9
Housing, Sppt, Front Wheel, 2-49
Housing, Thermostat [Ku], 5-31, 6- 29
Housing, Valve, 4-5
Housingl, 4-8
Hsg & Switch Kit, Pump, Repair,, 4-27

Hub Assy, Wheel, 5 Bolt 4.50bc Taper B, 2-49
Hub, Drive, Brush, Disk, 1.00b [6t], 3-7, 3-9
Hub, Drive, Brush, Disk, 3hole 5.8bc, 2-5
Hub, Drive, Brush, Disk, 3hole 5.8bc[6t], 2-5

I

Idler Assy, Brush, Replmt [M20/T20, M30], 2-69, 2-71
Idling, Apparatus [Ku], 6-26
Impeller, 11.81d X 0.500b, 2-105
Impeller, 9.00d X 1.40w X 0.376b, 2-107
Impeller, 9.5" Dia, 18 Blade (Machined), 2-103
Impeller, Pump, Water [Ku], 6-8
Impeller, Water Pump, 5-8
Indicator, Press, 60psi, 2-129
Indicator, Timing [Ku], 6-18
Insert, :Lrg [Venturi, FaST III], 4-32
Insert, Cap, Mount, Es Pump, 4-3
Insert, Cplg, Qm, Bm08, 3-39
Insert, Plt, Cam, Pump, Hyd, 4-7
Instr, Maint, Wall Chart [M20], 3-71
Instr, Motor, Hyd, Repair [En], 4-9
Instr, Repair, Motor, Hyd, Gear, 4-5
Instr, Repair, Pump, 4-7
Instr, Seal Kit, Motor, 4-10
Instr, Valve, Steering, Repair, 4-25
Instr. Repair Info, Motor, 4-8
Insulation, 3-55
Insulation, Acstc, Rnd, 0.8, 02.5d 0.5h, 2-17
Insulation, Flame-Retardant, 0.5, 2-21, 2-27
Insulation, Flame-Retardant, 0.50, 2-103
Insulation, Flame-Retardant, 0.75-0.88, 2-11, 2-15, 2-103
Insulation, Flame-Retardant, 1.0, 2-15
Insulation, Shrd, Eng, Gusset, 2-21
Insulation, Thermal, Hydraulic Blanket, 2-129
Isolator, Rbr, 2-37
Isolator, Vib, .50d, 2-23
Isolator, Vib, Bshg, 1.1d 0.6l .4b 0.78h, 2-39, 2-41, 2-43, 2-103, 2-105, 2-107

K

Key, 5-17
Key [Ku], 6-15, 6-17
Key-Wdruff 0.25 1.00, 4-8
Key, Feather, 5-15
Key, Ignition [Set Of 2], 1-1, 2-13
Key, Motor, Hyd, 4-5
Key, Shaft, Pump, Hyd, 4-7
Key, Sq, 0.12 X 0.12, 0.50l, 2-33, 2-35
Key, Sq, 0.12 X 0.12, 0.75l, 4-10
Key, Sq, 0.12 X 0.12, 1.00l (Included With Motor), 2-103
Key, Sq, 0.25 X 0.25, 1.25l, 2-69, 2-71
Key, Woodruff, 5-13
Key, Woodruff [Ku], 6-13
Key, Woodruff, 0.25 1.00 [Asa#0808], 4-9
Keychain, Rectangle, Parts & Service, 2-13
Kit, Bellows, Pump, Detgt, 4-26
Kit, Brush, Motor, Ele, 4-3
Kit, Seal, Motor, Hyd, 4-5
Kit, Seal, Motor, Hyd, Gear[Barns], 2-103, 4-10
Kit, Seal, Valve, Hyd [Cec], 4-10
Kit, Valve, Check, Pump, Water, 4-3
Knob Assy, Star, 1.12d 3ear M10, 2-81
Knob, Star, 2.80d 4ear 1.1l .31-18 Pyp, 2-79
Knob, Tee, 2.5x1.0 1.1l 0.38-16 Plstc, 2-17
Knobs, Adjmt, Weight, 4-31

L

Label [User, Attention, ec-H2O], 2-176
Label Kit, Panel, Replmt [M20], 2-13
Label Kit, Panel, Replmt [M20/M30 ec-H20 only], 2-13
Label Set, Brush Indicator & Removal, 2-176
Label Set, Hi Temp, 2-176
Label Set, Info/Hzrd, Swpr / Scrbr, 2-176
Label Set, Info/Hzrd, Swpr / Scrbr, Tj (Japan Only), 2-176
Label, Logo, 05.75L 2Color [ES], 2-176
Label, Logo, 07.95L 2Color [FaST], 2-176
Label, Logo, 12.3L 4Color [ec-H2O], 2-176
Label, Logo, 16.9L 4Color [ec-H2O], 2-176
Label, Model, 2Color [M20], 2-176
Label, Opertnl, Telem [Fcc/Ic], 3-57
Label, Switch, Rocker [M20/M30], 2-13
Lamp Strobe, Amb [12-48 Vdc], 3-51, 3-53
Lamp, 12vdc [Speaker], 2-7
Lamp, Bulb, Flsh, 3-49, 3-52
Lamp, Bulb, Strobe, 3-51, 3-53
Lamp, Flasher, Amb [12-48 Vdc], 3-49, 3-52
Lamp, Halogen [Speaker], 2-7
Latch, 2-15, 2-39, 2-61, 2-63, 2-69, 2-71, 2-91, 2-92, 3-67
Latch Kit, Cover, Soltn, Replmt[M20/T20], 2-91, 2-92
Latch, Cover, 2-92
Latch, Door [Southco 91-562-07], 2-21, 2-83, 2-87
Latch, Hook, 2-85, 2-89
Lens, Blue, Option, F/ Strobe / Flsh Light, 3-49, 3-51, 3-52, 3-53
Lens, Lamp, Amb, Strobe/Flasher, 3-49, 3-51, 3-52, 3-53
Lens, Red, Option, F/ Strobe / Flsh Light, 3-49, 3-51, 3-52, 3-53
Lever Assy, Fork [KU], 6-28
Lever, Cntrl, Spd [Ku], 6-27
Lever, Engine Stop, 5-29
Lever, Fork [Ku], 6-28
Lever, Fork 2, 5-30
Lever, Fork, Shaft [Ku], 6-28
Lever, Plate, Cntrl [Ku], 6-27
Lever, Speed Control, 5-29
Lever, Stop [Ku], 6-27
Light Kit, Flsh, Ci [M20 And T20], 3-49
Light Kit, Flsh, W/Ohg, Ci[M20 And T20], 3-52
Light Kit, Strobe, Ci [M20 And T20], 3-51
Light Kit, Strobe, W/Ohg, Ci [M20 And T20], 3-53
Light, Led, .312D, 2 Volt [Tri-Color] (ec-H20 only), 2-13
Light, Panl, 14vdc, , 1.1 X 1.0, 2-13
Light, Tail, 12vdc, 2-63
Link Assy, Rod-End, M12, 2-77
Lock, Secondary, 2cav, Mp280 Sealed, 4-27

M

Magnet, Pickup, 2-23
Maint Kit, 400hr, Dsl [M20/T20], 1-1
Manifold Assy, Inlet, 5-11, 6-11
Manifold, Bar, Spray, 37.5inch, 2-97
Manifold, Exhaust [Ku], 6-11
Manifold, Exhaust, Front, Down, 5-11
Manifold, Water, 3-39
Manual, Eng [Kubo, V1505e], 3-71
Manual, Oprtr [M20 Dsl En], 3-71
Manual, Oprtr [M20 Dsl Es], 3-71
Manual, Oprtr [M20 Dsl Fr], 3-71
Manual, Parts [M20 Dsl En/Jp], 3-71
Manual, Service [M20 En], 3-71
Mat, Floor, 2-9
Media, Cd-Rom, Training [ec-H2O Tennant], 3-71
Metal, Crankpin, 5-17
Metal, Crankpin 02, 5-17
Metal, Crankpin 04, 5-17
Metal, Crankshaft 1, 5-17
Metal, Crankshaft 2, 5-17
Metal, Crankshaft 3, 5-17
Metal, Crankshaft1 02, 5-17
Metal, Crankshaft1 04, 5-17
Metal, Crankshaft2 02, 5-17
Metal, Crankshaft2 04, 5-17
Metal, Crankshaft3 02, 5-17
Metal, Crankshaft3 04, 5-17
Metal, Side 1, 5-17
Metal, Side 1 02, 5-17
Metal, Side 1 04, 5-17
Metal, Side 2, 5-17
Metal, Side 2 02, 5-17
Metal, Side 2 04, 5-17
Mirror, Convex, 0.50D, 3-55
Module Kit, Replmt [Ec-H20], 4-29
Module Kit, Replmt [Ec-H20] (See Breakdowns), 3-37
Molding, Afmkt, Trim, Pvc, .08 .11, 01Ft, 3-37
Molding, Afmkt, Trim, Pvc, .08 .11, 1ft, 2-9

Molding, Trim, Pvc,.18-.31 07.5l, 2-63
Motor Kit, Pump, Repair,, 4-27
Motor Kit, Replmt [M20&T20], 2-103
Motor, Ele [12vdc, Shaker], 2-61
Motor, Ele 12Vdc, Shakr, 2-61
Motor, Ele, 12vdc, Pump, Water, 4-3
Motor, Ele, Gear, 14vdc, Pump, Detgt, 4-26
Motor, Hyd Gear In 4.5 B 1500, 4-8
Motor, Hyd, Gear, [Ex] .194 R 3000 (See Breakdowns), 2-107
Motor, Hyd, Gear, [Int], 19.0 X 3000, 4-5
Motor, Hyd, Gear, Ext 0.17 Lh 3000, 2-105, 2-107
Motor, Hyd, Gear, Ext 0.19 Rh 3000, 4-10
Motor, Hyd, Gear, Int 04.5 Bi-Dir 1500, 2-69, 2-71
Motor, Hyd, Gear, Int 04.5 Bi-Dir 1500 (See Breakdowns), 2-69, 2-71
Motor, Hyd, Gear, Int 08.9 Bi-Dir 2500, 3-9, 4-9
Motor, Hyd, Gear, Int 08.9 Bi-Dir 2500 (See Breakdowns), 3-7, 3-9
Motor, Hyd, Gear, Int 19.0 Bi-Dir 3000 (See Breakdowns), 2-49
Motor, Starter, 12vdc [Kubota] (See Engine Breakdown), 2-23
Mount Wldt, Valve, Pinch, Lh, 2-101
Mount Wldt, Valve, Pinch, Rh, 2-95
Muffler, Exhaust, 2-37
Muffler, Vacfan, 4.0id, 2-107

N

Nipple, Hose, 3-65
Nozzle, 3-65
Nozzle [Ku], 6-21
Nozzle Kit, Spray, Ci, 3-65
Nozzle, Spray, Gun, 3-65
Nozzle, Spring [Ku], 6-21
Nozzle, Wand, Plstc, 14.0l, 3-63
Nozzle, Wand, Plstc, 14.0lg, 3-61
Nut, 5-7, 5-11, 5-12, 5-25, 5-28, 5-29, 6-11, 6-19
Nut [Ku], 6-21, 6-23
Nut-Hxslot .75-16 Pltd, 4-8
Nut, Cap, 5-10, 5-13, 5-25, 5-28
Nut, Cap [Ku], 6-26
Nut, Cap, Cam [Ku], 6-13
Nut, Coil, F/#8, 4-11, 4-13, 4-15, 4-17, 4-19, 4-21, 4-23
Nut, Coil, Nyl Patch, 4-15, 4-17, 4-21, 4-23
Nut, Flange [Ku], 6-20
Nut, Ftg, Hyd, 0.56-18, 2-127
Nut, Hex [Ku], 5-31, 6-7, 6-12, 6-19, 6-23, 6-26, 6-27
Nut, Hex, Cap, 6-10
Nut, Hex, Flng, M5 X 0.8, 2-57
Nut, Hex, Flng, M6 X 1.00, 2-41, 2-43
Nut, Hex, Flng, M8 X 1.25, 2-43, 2-83, 2-87, 2-127
Nut, Hex, Jam, .31-24, 2-53
Nut, Hex, Jam, .38-24, 2-23
Nut, Hex, Jam, .50-20, 2-73, 3-11
Nut, Hex, Jam, .50-20, Lh, 2-73
Nut, Hex, Jam, M20 X 1.5, 2-17
Nut, Hex, Lock, .25-20, Nl, 2-27, 2-103, 2-107
Nut, Hex, Lock, .25-20, Nl, Ss, 2-55
Nut, Hex, Lock, .31-18, Nl, 2-15
Nut, Hex, Lock, .31-18, Nl, Thin, 2-15
Nut, Hex, Lock, .31-24, Nl, Thin, 2-107
Nut, Hex, Lock, .38-16, Nl, 2-33, 2-45
Nut, Hex, Lock, .38-16, Nl, Ss, 2-33, 2-35, 3-11
Nut, Hex, Lock, .38-16, Nl, Thin, 2-55, 2-103, 2-107
Nut, Hex, Lock, .50-13, Nl, Ss, 2-81
Nut, Hex, Lock, .50-13, Nl, Thin, 2-73
Nut, Hex, Lock, .50-20, Nl, Thin, 2-73
Nut, Hex, Lock, .75-10, Nl, 2-49
Nut, Hex, Lock, #08-32, Nl, 2-13
Nut, Hex, Lock, M10 X 1.5, Nl, 2-23, 2-33, 2-39, 2-41, 2-43, 2-107, 2-127, 3-55, 3-69
Nut, Hex, Lock, M10 X 1.5, Nl, Ss, 2-59, 2-67, 2-77, 2-81
Nut, Hex, Lock, M12 X 1.75, Nl, Ss, 2-73, 2-77
Nut, Hex, Lock, M12 X 1.75,Nl, 2-23, 2-24, 2-51
Nut, Hex, Lock, M4 X 0.7, Nl, 2-15, 2-21, 3-21
Nut, Hex, Lock, M4 X 0.7, Nl, Ss, 2-21, 2-55, 2-83, 2-87, 3-3
Nut, Hex, Lock, M4 X 0.70, Nl, 2-39
Nut, Hex, Lock, M4 X 0.70, Nl, Ss, 3-37
Nut, Hex, Lock, M5 X 0.8, Nl, 2-15, 2-47
Nut, Hex, Lock, M5 X 0.8, Nl, Ss, 2-69, 2-71, 2-97, 3-13, 3-19, 3-25
Nut, Hex, Lock, M5 X 0.80, Nl, 3-37, 3-57, 3-65
Nut, Hex, Lock, M5 X 0.80, Nl, Ss, 3-33, 3-43, 3-47, 3-49, 3-51, 3-52, 3-53, 3-67
Nut, Hex, Lock, M6 X 1.0, Nl, 2-15, 2-17, 2-19, 2-47, 2-53
Nut, Hex, Lock, M6 X 1.0, Ss, Nl, 2-13, 2-61, 2-65, 2-67, 2-75, 2-77, 2-97, 2-99
Nut, Hex, Lock, M6 X 1.00, Nl, 2-9, 2-29, 2-31, 2-33, 2-35, 2-39, 2-41, 2-43
Nut, Hex, Lock, M6 X 1.00, Nl, Ss, 3-57, 3-67
Nut, Hex, Lock, M6 X 1.00, Ss, Nl, 2-37, 2-99
Nut, Hex, Lock, M8 X 1.25, Nl, 2-7, 2-9, 2-21, 2-24, 2-27, 2-33, 2-35, 2-39, 2-45, 2-47, 2-53, 2-55, 2-85, 2-89, 2-131, 3-15
Nut, Hex, Lock, M8 X 1.25, Nl, Ss, 2-31, 2-37, 2-39, 2-55, 2-59, 2-61, 2-65, 2-67, 2-69, 2-71, 2-73, 2-75, 2-77, 2-79, 2-81, 2-83, 2-85, 2-87, 2-89, 2-91, 2-95, 2-101, 2-105, 3-7, 3-13, 3-15
Nut, Hex, Sltd, .75-16, 2-51, 2-69, 2-71
Nut, Hex, Sltd, 1.12-18, 2-49
Nut, Hex, Sltd, M20 X 2.5, 8, 2-69, 2-71
Nut, Hex, Std, .25-28, 2-53, 2-55
Nut, Hex, Std, .25-28, Lh, 2-53
Nut, Hex, Std, .31-18, 3-55
Nut, Hex, Std, #08-32, 2-23
Nut, Hex, Std, M10 X 1.50, 2-61
Nut, Hex, Std, M12 X 1.75, Ss, 2-85, 2-89, 2-105
Nut, Hex, Std, M16 X 2.0, 2-19
Nut, Hex, Std, M3 X 0.5, 8, 2-61
Nut, Hex, Std, M5 X 0.8, 8, 2-55
Nut, Hex, Std, M6 X 1.00, 8, 3-37
Nut, Hex, Std, M8 X 1.25, 2-9, 2-61
Nut, Hex, Std, M8 X 1.25, Brs, 2-35
Nut, Hex, Std, M8 X 1.25, Ss, 2-55, 2-85, 2-89
Nut, Hexagon, 5-21
Nut, Isolator, .38-16 Wall Th .015-.437, 3-61
Nut, Lock [Ku], 6-26
Nut, Low Crown, .50-20, 2-103
Nut, Motor, Hyd, 4-5
Nut, Nozzle [Ku], 6-21
Nut, Solenoid, 4-13, 4-15, 4-17, 4-19, 4-21, 4-23
Nut, T, M10 X 1.50 X 15.8od X 13.0l, 2-83, 2-87
Nut, T, M8 X 1.25 X 14.5od X 9.5l, 3-7
Nut, Wheel, .50-20 X 60 Angle, 2-49

O

O-Ring, 5-3, 5-4, 5-5, 5-7, 5-17, 5-21, 5-27, 5-29
O-Ring [Ku], 6-4, 6-27
Ohg Kit, Ci [M20 And T20], 3-55
Oil Filter, Plug, 5-7
Oil, Hyd [El, Iso 100, 01gal], 1-1
Oil, Hyd [El, Iso 100, 05gal], 1-1
Oil, Hyd [El, Iso 32, 01gal], 1-1
Oil, Hyd [El, Iso 32, 05gal], 1-1
Oil, Hyd [El, Iso 68, 01gal], 1-1
Oil, Hyd [El, Iso 68, 05gal], 1-1

P

Pad, Armrest, 4-31
Pad, Pedal, Brake, 3.96l 2.36w 0.75, 2-53
Pad, Tank, Hyd [W/Psa], 2-127, 2-129
Paint, Airdry, Blk, 12oz, 1-1
Paint, Airdry, Gray, 12oz [Enamel], 1-1
Paint, Airdry, Iron Gray,12oz[Pwdr Coat], 1-1
Paint, Airdry, Off-White, 12oz, 1-1
Paint, Airdry, Teal, 12oz, Solid, 1-1
Pan, Oil, Dsl, 6-4
Panel Kit, Instmt, Repair [M20/M30], 2-13
Panel Wldt, Adj, 2-9
Panel Wldt, Dsl, Replmt, 2-9
Panel Wldt, Dsl, Replmt [W/Fast], 2-9

Panel Wldt, Dsl, Replmt, TJ (Japan only), 2-9
Panel Wldt, Dsl, Replmt, TJ [W/Fast] (Japan only), 2-9
Panel Wldt, Dsl, Replmt, TJ, W/Es (Japan only), 2-9
Panel Wldt, Dsl, W/ Es, Replmt, 2-9
Panel Wldt, Filler, 2-7
Panel, Access, Door, 2-9
Panel, Access, Floor, 2-9
Panel, Instmt, Rh, Dsl, Replmt, 2-13
Panel, Kit, Instmt, Replmt [M20/M30 ec-H20 only], 2-13
Panel, Shrd, Fan, Dsl, 2-39
Pawl, Str, 2-69, 2-71
Pedal, Brake, Lock, 2-53
Pedal, Propel, 2-54
Pin Kit, Wheel, Ci [M20/T20/M30], 2-7, 2-63, 3-13
Pin Wldt, 3-11
Pin Wldt, Front, 2-79, 3-9
Pin Wldt, Lift (Replaced by 9003478), 2-81
Pin Wldt, Pivot, Hppr, 2-7
Pin, 0.63d 01.8l, 1/M10h, 2cham, 2-81
Pin, 0.87d 01.8l, 1/M6 X 1.0, 1cham,Stl, 2-57
Pin, 30mmd X 215mml, 2-7, 2-63, 3-13
Pin, Arm, Safety, 2-57
Pin, Clamp, 5-27, 6-25
Pin, Clevis, 0.25d X 0.75l, 2-53
Pin, Clevis, 0.31d X 0.75l, 3-7
Pin, Clevis, 0.31d X 1.00l, 2-53
Pin, Clevis, 0.37d X 1.31l, 3-11
Pin, Clevis, 0.37d X 1.50l, 3-11
Pin, Clevis, 0.37d X 1.75l, 2-65, 2-67, 2-73, 2-85, 2-89, 3-11
Pin, Clevis, 0.37d X 2.00l, 2-77
Pin, Clevis, 0.50 D X 4.50l, 2-54
Pin, Clevis, 0.62d X 2.91l, 2-57
Pin, Clevis, 0.75d X 2.00l, 2-73
Pin, Clevis, 0.88d X 2.25l, 2-57
Pin, Cotter, .062 X 0.50, 2-53
Pin, Cotter, .094 X 1.00, 2-53, 2-57, 2-65, 2-67, 2-77, 3-7, 3-11
Pin, Cotter, .125 X 1.00, 2-55, 2-85, 2-89
Pin, Cotter, .125 X 1.25, 2-69, 2-71
Pin, Cotter, .125 X 2.00, 2-49
Pin, Cotter, .156 X 1.25, 2-73
Pin, Cotter, .156 X 2.00, 2-51, 2-63
Pin, Cotter, Hair, 0.31d .058 Wir, 2-15
Pin, Cotter, Hair, 0.38d .072 Wir, 2-73
Pin, Cotter, Hair, 0.62d .120 Wir, 2-57
Pin, Cotter, Hair, 1.00d .178 Wir, 2-7, 2-63, 3-13
Pin, Cotter, Hair, Dbl, 2-7, 3-13
Pin, Dowel [Ku], 6-3
Pin, Dowel, Cyl Block [1pk=4], 2-23
Pin, Dowel, Pump, Hyd, 4-7
Pin, Eng [Ku], 6-3
Pin, Grvd, 0.43d 01.8l [303ss], 2-79, 3-9
Pin, Hitch, .375d X 3.12l, Pl, 3-7, 3-9, 3-69
Pin, Joint, 5-27
Pin, Joint, Inj [Ku], 6-25
Pin, Lift, Drain, 2-99
Pin, Locking, Steering, Tilt, 2-17
Pin, Pipe, 5-3
Pin, Piston, 5-17
Pin, Piston [Ku], 6-17
Pin, Roll, .125 D X 0.75l, .125/.129, 2-63
Pin, Roll, .187d X 1.62l, .187/.192, 2-7, 2-63, 3-13
Pin, Spring, 5-29
Pin, Spring [Ku], 6-12, 6-27
Pin, Start Spring, 5-3
Pin, Start, Spring, 6-3
Pin, Straight, 5-3
Pin, Straight [Ku], 6-3
Pin, Tappet [Ku], 6-25
Pin, Tappet Guide, 5-27
Pin, Valve, Steering, 4-25
Pipe, Breather [Ku], 5-11, 6-11
Pipe, Clip [Ku], 6-20
Pipe, Drain, 5-21
Pipe, Fltr, Oil [Ku], 2-23
Pipe, Fuel, Overflow [Ku], 6-20
Pipe, Injection 1, 5-23
Pipe, Injection 2, 5-23
Pipe, Injection 3, 5-23
Pipe, Injection 4, 5-23
Pipe, Injector, # 4, 6-20
Pipe, Over Flow, 5-23
Pipe, Overflow, 6-20
Pipe, Water, 5-10, 6-10
Pipe, Water [Kubota], 6-8
Pipe, Water, Return, 6-29
Piston, 5-17
Piston 05, 5-17
Piston, Eng [Ku], 6-17
Piston, Pump, Hyd, Gear, 4-5
Piston, Ring Assy [Ku], 6-17
Pivot Wldt, Brush, Side, 3-11
Plate, 5-27, 6-25
Plate Assy, Orifice, 0.0105Id, Green, 4-32
Plate Wldt, Arm, Stop, 2-57
Plate Wldt, Hose, Vacuum, 2-103, 2-105
Plate Wldt, Lift, Sqge, 2-77
Plate Wldt, Mtg, 3-37
Plate Wldt, Mtg, Fan, 2-105
Plate Wldt, Mtg, Solenoid, 2-63
Plate Wldt, Retainer, Sqge, 3-9
Plate Wldt, Seat, 2-15
Plate Wldt, Shakr, Side, 2-61
Plate Wldt, Wrap, Brush, 2-73
Plate, Backing, Brake, 2-51
Plate, Bottom, Hppr, 2-65, 2-67
Plate, Cam, 4-7
Plate, Cntrl, Spd [Ku], 6-27
Plate, Cover, 4-7
Plate, Guard, Fan Shrd, Dsl, 2-39
Plate, Guard, Fan, Shrd, Dsl, Replmt, 2-39
Plate, Handle, 2-69, 2-71
Plate, Hook, Latch, 3-67
Plate, Hook, Latch, [M20], 3-67
Plate, Hsng [FaST], 3-19
Plate, Inspection, 3-37
Plate, Label, Soltn Tank (ec-H20 only), 2-92
Plate, Mtg, 3-69
Plate, Mtg, Latch, 2-91, 2-92
Plate, Mtg, Light, 2-13
Plate, Mtg, Prop Rod, 2-99
Plate, Mtg, Pump, 3-37, 3-65
Plate, Mtg, Seal, 2-19, 2-39
Plate, Mtg, Skirt, Scb Head, 2-75
Plate, Mtg, Vacuum Wand, 3-61
Plate, Mtg, Valve, 3-25, 3-33, 3-43
Plate, Orifice, 0.070id, 3-19
Plate, Orifice, 0.093id, 3-19
Plate, Pin, Clevis, Upper, 2-57
Plate, Retainer, Door, Dump, 2-65, 2-67
Plate, Seal, Sound, 2-21
Plate, Shakr, 2-61
Plate, Shakr, Bar, 2-61
Plate, Shield, Heat, Dsl, Replmt, 2-37
Plate, Skirt, Front, 2-75
Plate, Spacer, Motor, Hyd [En], 4-9
Plate, Sppt, 2-53
Plate, Sppt, Tank, 2-99
Plate, Stop, Brake, 2-53
Plate, Tank, Bottom, 2-99
Plate, Valve, Motor, Hyd, 4-5
Plate, Valve, Pump, Hyd, 4-7
Plate, Wear, Steering Valve, 4-25
Plug, 4-5, 5-3, 5-5, 5-7
Plug #10, 4-8
Plug #4, 4-8
Plug Assy [Cl], 4-25
Plug Kit, Drain, Recvy, Ci [M20 & T20], 2-99
Plug Orifice, Valve, Hyd, .140, 4-21, 4-23
Plug Wldt, Drive, Brush, 2-69, 2-71
Plug Wldt, Drive, Brush, Sweep, 2-69, 2-71
Plug, Cup, Sealing [Ku], 6-3, 6-5
Plug, Drain, 5-4
Plug, Drain, Expandable, 4.75-6.00, 2-99
Plug, Eng [Ku], 6-3
Plug, Expansion, 5-3
Plug, Gauge, Oil [Ku], 6-4
Plug, Glow, 5-23
Plug, Hole, Rnd, 0.50h .03-.12, Blk Nyl, 2-13
Plug, Hole, Rnd, 0.81h, Blk, 2-9
Plug, Hole, Rnd, 0.88h .03-.12, Blk Nyl, 2-9
Plug, Hole, Rnd, 1.00h .03-.12, Blk Nyl, 2-9
Plug, Hole, Rnd, 1.25H .03-.12, Blk Nyl, 2-15
Plug, Hole, Rnd, 2.50h .03-.25, Blk Nyl, 2-9
Plug, Hole, Rt, Rocker Switch, .87 X 1.7, 2-13
Plug, Hole, Soltn Tank, Blk Pyu, 2-91
Plug, Hose, Pyu, 2-95, 2-101
Plug, Oil Filler, 5-10
Plug, Orifice, 0.060, Ss [FaST Ii+], 4-32
Plug, Orifice, Valve, Hyd, .030, 4-11, 4-21, 4-23

Plug, Orifice, Valve, Hyd, .040, 4-13, 4-15, 4-17, 4-21, 4-23
Plug, Orifice, Valve, Hyd, .046, 4-19, 4-21, 4-23
Plug, Orifice, Valve, Hyd, .063, 4-19
Plug, Pump, Hyd, Gear, 4-5
Plug, Restrictor, 3-43
Plunger, 3-61, 3-63
Plunger, Pump, 5-27
Plunger, Pump, Inj [Ku], 6-25
Poppet, Pump, Hyd, Gear, 4-5
Pouch, 3-39
Pully, Fan, 5-8
Pump Assy, Column, Es, 4-3
Pump Assy, Column, Es (See Breakdowns), 3-5
Pump Kit, Hyd, Rotating [Cessna], 4-7
Pump Kit, Mtg, Aux, Ci [M20 & T20], 2-125
Pump, Diaphragm, 4-27
Pump, Air, Ele, 12vdc, 3-21
Pump, Detgt, 12vdc, 3-21
Pump, Detgt, 14vdc, 150ml/Min 20psi, 4-26
Pump, Detgt, 14vdc, 150ml/Min 20psi (See Breakdowns), 3-3
Pump, Diaphragm (See Breakdowns), 3-65
Pump, Fuel, 2-29
Pump, Hyd, Piston, Var, 1.24 4000, Cw, 4-7
Pump, Hyd, Piston, Var, 1.24 4000, Cw (See Breakdowns), 2-125
Pump, Injection [Kubo], 6-23, 6-25
Pump, Oil, Eng [Ku], 6-7
Pump, Oil, Pickup [Sump, Ku], 5-4
Pump, Soltn, 13.7vdc, 65psi [FaST Ii+], 3-29
Pump, Soltn, Ele, 12vdc [W/O Chk Valve], 3-19
Pump, Soltn, Ele, 13.7vdc,12/28psi, 3-37
Pump, Water Assy [Ku], 6-8
Push Rod, 5-15

R

Race Thrust, 4-8
Race, Brg, Pump, Hyd, 4-7
Rack, Control, 5-27
Radiator Kit, Replmt, Ci, 2-39
Radiator, W/ Hyd Cooler [Side X Side], 2-41, 2-43
Receptacle, Lamp [Speaker], 2-7
Relay, 12vdc, 40a, Spdt N/O, 2-29, 2-47, 3-19, 3-65
Relay, 12vdc, 040a, Spdt No, 2-169, 3-29, 3-37
Reservoir, Hyd, 10.0Gal, Replmt, 2-129
Resistor, Ele, Plug [430 , 2w], 3-46
Retainer, 5-21, 6-19
Retainer, Boot, Steering Column, 2-17
Retainer, Gear, Starter [Ku], 6-19
Retainer, Motor, Hyd, 4-5
Retainer, Ring, Brake, 2-51
Retainer, Skirt, 2-75
Retainer, Skirt, Front, 2-75
Retainer, Spring, 2-77
Retainer, Spring [Ku], 6-12
Retainer, Spring, Valve [Ku], 6-12
Retainer, Sqge, 3-7
Retainer, Sqge, Side, Lh, 2-87
Retainer, Sqge, Side, Rh, 2-83
Retainer, Valve Spring, 5-12
Ring [Ku], 6-17
Ring, Lock, 4-7
Ring, Motor, Hyd, 4-5
Ring, Mtg, Sqge, .50l, 2-79
Ring, Piston Assy [Ku], 6-17
Ring, Retainer, Steering Valve, 4-25
Ring, Retaining, 4-7
Ring, Retaining, Ext, 0.38d, [E-Ring], 2-79, 2-81, 3-9
Ring, Retaining, Ext, 0.38d, [Selflock], 2-77
Ring, Retaining, Ext, 0.50d, Hd, 2-17
Ring, Retaining, Ext, 0.62d, Hd, 2-81
Ring, Retaining, Ext, 0.98d, [E-Ring], 2-53
Ring, Retaining, Ext, 1.00d, Basic, 2-69, 2-71
Ring, Retaining, Int, 2.00d, 2-57
Ring, Retaining, Pump, Hyd, 4-7
Ring, Snap [Ku], 6-13, 6-15
Ring, Snap, Piston [Ku], 6-17
Rivet, Blind, .125d X 0.54 X .25d, Alm, 2-91, 2-92
Rivet, Plstc, .250d X 0.898, 2-17
Rivet, Plstc, .250d X 0.90, 3-39, 3-63
Rod, 2-53
Rod Assy, Connecting [Ku], 6-17
Rod Wldt, Arm, Safety, 2-57
Rod-End, .25-28rh Fem 0.25b [Teflon], 2-55
Rod-End, .50-20lh Fem 0.50-20stud, 2-73
Rod-End, .50-20rh Fem 0.50b, 2-73
Rod-End, .50-20rh Mal 0.50b, 3-11
Rod, Push [Ku], 6-21
Rod, Push, Valve [Ku], 6-15
Rod, Thrd, 2 End, .50-20 04.9l, Rh / Lh, 2-73
Roller, 5-21
Roller, Brg, 2-95, 2-101

S

Screen Kit, Hppr, Replmt [M20], 2-59
Screen Wldt, Hppr, 2-59
Screen, Pump, 3-5
Screen, Vacuum, 2-99
Screw, 4-8, 5-7, 5-23, 5-27
Screw, Adj, Rocker Arm [Ku], 6-12
Screw, Adj, Stop [Ku], 6-26
Screw, Adjusting, 5-12
Screw, Btn, M8 X 1.25 X 16, Ss, 3-13
Screw, Btn, M8 X 1.25 X 20, Blk, 2-83, 2-87, 3-67
Screw, Btn, M8 X 1.25 X 25, Ss, 2-73, 3-7
Screw, Cap, 4-7
Screw, Cap, Motor, Hyd, 4-5
Screw, Flt [Ku], 6-7
Screw, Flt, .25-20 X 1.00, Al, 2-103
Screw, Flt, .38-16 X 1.50, Al, 2-103
Screw, Flt, M10 X 1.5 X 25, 10.9, 2-83, 2-87
Screw, Flt, M10 X 1.5 X 30, Ss 18-8, 2-65
Screw, Flt, M8 X 1.25 X 20, Blk, 2-83, 2-87
Screw, Flt, M8 X 1.25 X 25, 2-21
Screw, Flt, M8 X 1.25 X 25, 10.9, 2-65
Screw, Flt, M8 X 1.25 X 30, Ss, 2-95, 2-101
Screw, Flt, Soc, .25-20 X 1.00, Al, 2-107
Screw, Follow, 5-27
Screw, Hex [Ku], 5-31, 6-4, 6-5, 6-7, 6-11, 6-23, 6-25, 6-28
Screw, Hex, .25-14 X 0.75, Fmg/Ab, Ss, 2-99
Screw, Hex, .25-20 X 0.75, Nl, 2-107
Screw, Hex, .25-20 X 1.00, 5, 3-7, 3-9
Screw, Hex, .25-20 X 1.75, Ss, 2-55
Screw, Hex, .25-20 X 2.25, Ss, 2-55
Screw, Hex, .31-18 X 0.75, Sems, 2-33
Screw, Hex, .31-18 X 1.00, G5, 2-35
Screw, Hex, .31-18 X 1.50, G5, 2-33
Screw, Hex, .31-24 X 0.75, Nl, 2-55
Screw, Hex, .38-16 X 0.75, Nl, 2-69, 2-71, 3-7, 3-9
Screw, Hex, .38-16 X 0.88, 5, 3-69
Screw, Hex, .38-16 X 1.00, 5, 2-55
Screw, Hex, .38-16 X 1.25, 5, 2-125, 3-61
Screw, Hex, .38-16 X 1.25, G5, 2-55
Screw, Hex, .38-16 X 1.50, Ss, 3-11
Screw, Hex, .38-16 X 2.00, Ss, 2-55
Screw, Hex, .38-16 X 3.00, G5, 2-33, 2-35, 2-45
Screw, Hex, .50-13 X 1.50, 5, 2-73
Screw, Hex, .50-13 X 3.00, Ss18-8, 2-81
Screw, Hex, .75-10 X 3.25, G5, 2-49
Screw, Hex, .75-10 X 4.00, 5, 2-49
Screw, Hex, #10-16 X 0.62, Fmg [Ab], 3-65
Screw, Hex, #10-16 X 0.62, Fmg, [Ab], 2-19
Screw, Hex, 10-24 X 0.50, Ss, 2-35
Screw, Hex, Case, Brg, Main [Ku], 6-9
Screw, Hex, Cshft [Ku], 6-17
Screw, Hex, Flywheel [Ku], 6-18
Screw, Hex, Head, Cyl [Ku], 6-5
Screw, Hex, M10 X 1.25 X 25, 8.8, 2-23, 2-41, 2-43
Screw, Hex, M10 X 1.25 X 35, 8.8, 2-33, 2-35
Screw, Hex, M10 X 1.5 X 110, 8.8, 2-23
Screw, Hex, M10 X 1.5 X 16, 8.8, 2-17
Screw, Hex, M10 X 1.5 X 20, Ss, 2-61, 2-65, 2-67
Screw, Hex, M10 X 1.5 X 25, 8.8, 2-7, 2-9, 2-23, 2-33, 2-127
Screw, Hex, M10 X 1.5 X 25, Ss, 2-57, 2-63, 2-73, 2-85, 2-89
Screw, Hex, M10 X 1.5 X 30, 8.8, 3-55

Screw, Hex, M10 X 1.5 X 30, Ss, 2-7, 2-65, 2-67, 2-77, 3-13
Screw, Hex, M10 X 1.5 X 35, 8.8, 2-23, 2-31, 3-69
Screw, Hex, M10 X 1.5 X 40, 8.8, 2-107
Screw, Hex, M10 X 1.5 X 45, 8.8, 3-69
Screw, Hex, M10 X 1.5 X 80, 8.8, 3-69
Screw, Hex, M10 X 1.50 X 25, 8.8, 2-35, 2-41, 2-43
Screw, Hex, M10 X 1.50 X 40, 8.8, 2-41, 2-43
Screw, Hex, M10 X 1.50 X 60, 8.8, 2-61
Screw, Hex, M12 X 1.75 X 30, 8.8, 3-11
Screw, Hex, M12 X 1.75 X 30, Ss, 2-63
Screw, Hex, M12 X 1.75 X 40, 8.8, 2-51, 2-73
Screw, Hex, M12 X 1.75 X 55, Ss, 2-85, 2-89
Screw, Hex, M12 X 1.75 X 60, 8.8, 2-23
Screw, Hex, M16 X 2.0 X 90, 8.8, 2-19
Screw, Hex, M4 X 0.7 X 10, Fmg, 2-57
Screw, Hex, M4 X 0.7 X 12, 8.8, 3-21
Screw, Hex, M4 X 0.70 X 12, 8.8, 3-37
Screw, Hex, M4 X 0.70 X 50, Ss, 4-29
Screw, Hex, M5 X 0.8 X 10, Fmg, 2-73
Screw, Hex, M5 X 0.8 X 12, Ss, 3-13, 3-69
Screw, Hex, M5 X 0.8 X 16, Fmg, 3-61
Screw, Hex, M5 X 0.8 X 20, 8.8, 2-15, 2-55, 2-57
Screw, Hex, M5 X 0.80 X 10, Fmg, 3-37
Screw, Hex, M5 X 0.80 X 16, Fmg, 3-63
Screw, Hex, M5 X 0.80 X 16, Ss, 3-57
Screw, Hex, M5 X 0.80 X 20, 8.8, 3-37, 3-57
Screw, Hex, M6 X 1.0 X 12, Fmg, 2-7, 2-39, 2-127
Screw, Hex, M6 X 1.0 X 12, Ss, 3-67
Screw, Hex, M6 X 1.0 X 16, 8.8, 2-19, 2-29, 2-33, 2-39, 2-47, 2-53
Screw, Hex, M6 X 1.0 X 16, Fmg, 2-53, 2-55, 2-63, 2-75, 3-3, 3-19, 3-21
Screw, Hex, M6 X 1.0 X 16, Ss, 2-61
Screw, Hex, M6 X 1.0 X 20, 8.8, 2-15, 2-29, 2-31, 2-33
Screw, Hex, M6 X 1.0 X 20, 9.8, Sems, 2-57
Screw, Hex, M6 X 1.0 X 20, Ss, 2-37, 2-65, 2-67, 2-97, 2-99
Screw, Hex, M6 X 1.0 X 25, 8.8, 2-63
Screw, Hex, M6 X 1.0 X 25, Ss, 2-85, 2-89
Screw, Hex, M6 X 1.0 X 35, Ss, 2-75
Screw, Hex, M6 X 1.0 X 40, 8.8, 2-29
Screw, Hex, M6 X 1.0 X 55, Ss, 2-99
Screw, Hex, M6 X 1.0 X 60, 8.8, 2-33, 2-53
Screw, Hex, M6 X 1.00 X 12, Ss, 2-92, 3-37, 3-67
Screw, Hex, M6 X 1.00 X 16, 8.8, 2-9
Screw, Hex, M6 X 1.00 X 16, Ss, 3-29
Screw, Hex, M6 X 1.00 X 20, 8.8, 2-35
Screw, Hex, M6 X 1.00 X 20, 9.8, Sems, 2-17, 2-19, 2-29, 2-39, 2-41, 2-43, 3-37, 3-57
Screw, Hex, M6 X 1.00 X 20, Ss, 2-85, 2-89
Screw, Hex, M6 X 1.00 X 25, 9.8 Sems, 2-13, 2-41, 2-43
Screw, Hex, M6 X 1.00 X 25, 9.8, Sems, 2-29
Screw, Hex, M6 X 1.00 X 25, Ss, 2-99
Screw, Hex, M6 X 1.00 X 35, Ss, 3-37
Screw, Hex, M8 X 1.25 X 110, Ss, 2-79, 3-15
Screw, Hex, M8 X 1.25 X 120, 8.8, Fl, 2-131
Screw, Hex, M8 X 1.25 X 130, 8.8, 2-69, 2-71
Screw, Hex, M8 X 1.25 X 16, 8.8, 2-99, 3-11
Screw, Hex, M8 X 1.25 X 16, Ss, 2-69, 2-71, 2-95, 2-101
Screw, Hex, M8 X 1.25 X 20, 8.8, 2-9, 2-15, 2-19, 2-21, 2-29, 2-37, 2-39, 2-41, 2-45, 2-49, 2-53, 2-103
Screw, Hex, M8 X 1.25 X 20, Ss, 2-9, 2-15, 2-21, 2-31, 2-39, 2-61, 2-69, 2-71, 2-73, 2-75, 2-85, 2-89, 2-91, 2-95, 2-99, 2-101, 2-103, 2-105, 2-131, 2-133, 3-3, 3-5, 3-21, 3-29, 3-37, 3-47, 3-49, 3-51, 3-65
Screw, Hex, M8 X 1.25 X 20, Ss, Sems, 2-43
Screw, Hex, M8 X 1.25 X 25, 8.8, 2-7, 2-9, 2-24, 2-27, 2-33, 2-35, 2-39, 2-61, 2-95, 2-101, 2-105, 2-127
Screw, Hex, M8 X 1.25 X 25, 9.8, Sems, 2-7, 2-41, 2-43, 2-47, 2-63, 2-99, 2-107
Screw, Hex, M8 X 1.25 X 25, Fmg, 2-75, 3-21, 3-25, 3-33, 3-43
Screw, Hex, M8 X 1.25 X 25, Ss, 2-55, 2-59, 2-65, 2-67, 2-69, 2-71, 2-75, 2-77, 2-91, 2-105, 3-7, 3-11, 3-15
Screw, Hex, M8 X 1.25 X 30, 8.8, 2-23, 2-33, 2-35, 2-95, 2-101
Screw, Hex, M8 X 1.25 X 30, 9.8, Sems, 2-129
Screw, Hex, M8 X 1.25 X 30, Ss, 2-105
Screw, Hex, M8 X 1.25 X 35, 8.8, 2-53, 2-95, 2-101
Screw, Hex, M8 X 1.25 X 35, 9.8, Sems, 2-41, 2-43
Screw, Hex, M8 X 1.25 X 35, Fl, Ss, 2-105
Screw, Hex, M8 X 1.25 X 35, Ss, Fl, 2-77
Screw, Hex, M8 X 1.25 X 40, Ss, Nl, 2-55
Screw, Hex, M8 X 1.25 X 45, Ss, 2-37, 2-81
Screw, Hex, M8 X 1.25 X 50, 8.8, 2-55
Screw, Hex, M8 X 1.25 X 50, Ss, Fl, 2-75
Screw, Hex, M8 X 1.25 X 60, 8.8, 2-61, 2-77
Screw, Hex, M8 X 1.25 X 60, 8.8, Fl, 2-9
Screw, Hex, M8 X 1.25 X 60, Fl, 2-73
Screw, Hex, M8 X 1.25 X 70, 8.8, 2-53
Screw, Hex, M8 X 1.25 X 90, 8.8, 2-81
Screw, Hex, W/ Washer [Ku], 6-10
Screw, Motor, Hyd [En], 4-9
Screw, Mtg [Ehpr98], 4-17, 4-23
Screw, Pan, 5-10
Screw, Pan, #12-16 X 0.50, F/ Plstc, 2-99, 3-70
Screw, Pan, 12-16 X 0.50, F/ Plstc (ec-H20 only), 2-92
Screw, Pan, M3 X 0.5 X 20, 4.8, 2-61
Screw, Pan, M4 X 0.7 X 10, Ss, 2-83, 2-87
Screw, Pan, M4 X 0.7 X 16, 4.8, 2-21
Screw, Pan, M4 X 0.7 X 16, Ss, 2-21, 3-3
Screw, Pan, M4 X 0.7 X 20, 4.8, 2-63
Screw, Pan, M4 X 0.7 X 20, Ss, 2-63
Screw, Pan, M4 X 0.7 X 25, 4.8, 2-15
Screw, Pan, M4 X 0.7 X 35, Ss, 2-55
Screw, Pan, M4 X 0.70 X 16, 4.8, 2-39
Screw, Pan, M5 X 0.8 X 12, Ss, 2-15, 2-21, 2-61, 2-97, 3-19, 3-25
Screw, Pan, M5 X 0.8 X 40, Ss, 2-69, 2-71, 3-19
Screw, Pan, M5 X 0.80 X 45, 4.8, 3-65
Screw, Pan, M6 X 1.0 X 16, Ss, 2-77
Screw, Pan, M8 X 1.25 X 25, Blk, 2-9, 2-13, 2-15, 2-17, 2-21
Screw, Pan, M8 X 1.25 X 25, Ss, 2-7
Screw, Pan, Phl, 06-20 X 0.50, Fmg/Ab, 2-21, 2-91, 2-92
Screw, Pan, Phl, 12-16 X 0.50, F/ Plstc, 2-91, 2-92
Screw, Pan, Phl, M4 X 0.70 X 20, Ss, 3-37
Screw, Pan, Phl, M5 X 0.80 X 12, Ss, 3-29, 3-33, 3-67
Screw, Pan, Phl, M5 X 0.80 X 16, Tcut,Ss, 4-29
Screw, Pan, Phl, M5 X 0.80 X 20, Ss, 3-43, 3-47, 3-49, 3-51, 3-52, 3-53
Screw, Pan, Phl, M6 X 1.00 X 35, Ss, 2-5
Screw, Pump, Injection [Ku], 6-25
Screw, Rod, Connecting [Ku], 6-17
Screw, Set, 5-12, 5-13, 5-15
Screw, Set [Ku], 6-13, 6-15
Screw, Set, #10-24 X 0.25, Nl, 2-61
Screw, Soc, .25-20 X 0.75, Al, 2-17
Screw, Soc, .50-13 X 1.50, Al, 2-49
Screw, Soc, M16 X 2.0 X 50, 12.9, 2-49
Screw, Soc, M6 X 1.00 X 16, 12.9, 2-23, 2-33, 2-35
Screw, Soc, M8 X 1.25 X 25, 12.9, 2-85, 2-89
Screw, Soc, M8 X 1.25 X 35, 12.9, 2-85, 2-89
Screw, Valve, Steering, 4-25
Screw, W / Washer, 6-20
Screw, With Washer, 5-23
Seal Kit, Cartridge, 2-133, 4-11, 4-13, 4-15, 4-17, 4-19, 4-21, 4-23
Seal Kit, Motor [Cl], 3-9, 4-9
Seal Kit, Pump, Hyd, 4-7
Seal Kit, Steering [Cl], 4-25
Seal Kit, Valve [Ehpr98], 4-17, 4-23
Seal Replmt Kit, 4-8
Seal, Sponge, 0.88 1.00W 43.0L, 2-19
Seal, Afmkt, Bulb, 90, 0.50d, 02ft, 2-15

Seal, Afmkt, Bulb, 90, 0.75d F/11ga 02ft, 2-15, 2-21
Seal, Afmkt, Bulb, 90, 0.75d F/11ga 08ft, 2-9
Seal, Afmkt, Bulb, Str, 1.0d F/11ga 08ft, 2-19
Seal, Afmkt, Ure, Adh, 0.38, 0.75w 08ft (Replaced By none), 2-61
Seal, Bulb, Str, .50Hi .50W 047.2L, Adh, 2-91, 2-92
Seal, Bulb, Str, 0.38h .75w Adh, 52 L, 2-43
Seal, Door, Dump, 2-65, 2-67
Seal, Door, Dump, Side, 2-65
Seal, Drive, Rear, Grease Cav, 2-49
Seal, Foam, 0.50, 2-9
Seal, Heat, 5-23
Seal, Heat [Ku], 6-20
Seal, Mechanical Assy [Ku], 6-8
Seal, Oil, 5-7, 5-9, 5-29
Seal, Oil [Ku], 6-27
Seal, Oil, Front [Ku], 6-7
Seal, Oil, Rear [Ku], 6-9
Seal, Org, 2-23, 5-10, 6-7, 6-10, 6-19
Seal, Org [Ku], 6-4, 6-7, 6-25
Seal, Org, .069 X 3.06id, 2-125
Seal, Org, .072 X 00.35id #04, 4-11, 4-19, 4-21, 4-23
Seal, Org, .078 X 00.47id #06, 4-11, 4-13, 4-19, 4-21, 4-23
Seal, Org, .078 X 00.47id 06, 4-15, 4-17
Seal, Org, .087 X 00.64id #08, 4-19
Seal, Panl, Instmt, 2-9
Seal, Plug, Drain, Nitrile, 2-99
Seal, Radiator, 2-39
Seal, Radiator, Upper, 2-47
Seal, Rbr, Clsd, .13, .38w 72.0l, Adh, 2-43
Seal, Rbr, Clsd, 0.13, Instmt Panl, 2-13
Seal, Shaft, Drain Plug, 2-99
Seal, Stem, Valve [Ku], 6-12
Seal, Ure, 0.38 0.75w 13.2l Adh, 2-107
Seal, Ure, 0.38 0.75w 33.0l Adh, 2-107
Seal, Valve Stem, 5-12
Seal, Wire, 14/16ga [Wp / Mp280 Sealed], 4-27
Seat, 4-31
Seat (See Breakdowns), 2-15
Seat, Spring Lower, 5-27
Seat, Spring Upper, 5-27
Seat, Spring, Lower, Injector [Ku], 6-25
Seat, Spring, Upper, Injector [Ku], 6-25
Seat, Suspension, W/1 Arm And Belt, 2-15
Seat, Valve, 5-7
Seatbelt, 4-31
Seatbelt, Retractable [Deluxe Seat], 2-15
Send-Unit, Fuel, 2-27
Send-Unit, Fuel [2007], 2-27
Send-Unit, Water, Temp, 04npt 113oh/195d, 2-129
Sensor Kit, Repair [Thermo-Sentry, M20], 2-61
Sensor, Level, Liq, 14vdc 01a .62-11, 2-92, 2-99, 3-5
Sensor, Spd / Dir, 6-30vdc, 2-55
Shaft Wldt, Brake, 2-53
Shaft Wldt, Pedal, Brake, 2-53
Shaft, Brush, Idler, 2-69, 2-71
Shaft, Fork Lever, 5-30
Shaft, Governor [Ku], 6-13
Shaft, Governor Weight, 5-13
Shaft, Governor, Weight [Ku], 6-13
Shaft, Govnr, 6-13
Shaft, Govnr [Ku], 6-13
Shaft, Idle Gear 1, 5-15
Shaft, Idler, Gear [Ku], 6-15
Shaft, Lever, Spd [Ku], 6-27
Shaft, Motor, Hyd, 4-5
Shaft, Mtg, Sheave, Dsl, 2-33
Shaft, Output, 4-8
Shaft, Output, Motor, Hyd [En], 4-9
Shaft, Pump, 4-7
Shaft, Pump, Water, 4-3
Shaft, Rocker, Arm [Ku], 6-12
Shaft, Stop Lever, 5-29
Shaker Wldt, 2-61
Sheave, 01grv, 02.6pd 0.63b [Hc41], 2-33
Sheave, 01grv, 04.1pd 1.6b [Xl], 2-33
Sheave, 01grv, Rwk 393400 [3v], 2-33
Sheave, Cshft [Ku], 6-17
Sheave, Fan [Ku], 6-8
Shield, Breather, 5-10, 6-10
Shield, Heat, Dsl, 2-37
Shim, 5-27, 6-23
Shim Kit, 4-7
Shim, Injection Pump 0.20 mm, 5-25
Shim, Injection Pump 0.25 mm, 5-25
Shim, Injection Pump 0.30 mm, 5-25
Shim, Pump, Injection, 6-23
Shim, Tappet, Injection [Ku], 6-25
Shim, Washer, 0.88d 0.51b .020, 2-103
Shim, Washer, 0.88d 0.51b .060, 2-103
Shock Absorber, 2.3 Strk, 2-55
Shoe, Brake, 180 X 30mm, 2-51
Shoe, Plstc, Sqge, 14.0, 3-61, 3-63
Shrd Wldt,Fan,Dsl, Replmt [M20/M30/T20], 2-41
Shrd Wldt,Fan,Dsl, Replmt [Tj], 2-41
Shroud Assy, Eng, 2-21
Shroud Wldt, Fan, Dsl, 2-41
Shroud Wldt, Fan, Eng, Dsl, 2-43
Shroud, Fan, 2-43
Shroud, Front, Trimmed, 2-19
Shroud, Seat, 2-15
Skirt, Debris, Eng Radiator, 2-39
Skirt, Fan, Eng, Dsl, 2-41, 2-43
Skirt, Neo, .06, 06.38w 40.86l, 06 Hole, 1-1, 2-75
Skirt, Neo, .06, 06.85w 27.95l, 08 Hole, 1-1, 2-83, 2-87
Skirt, Neo, .06, 07.63w 51.52l, 11 Hole, 2-75
Skirt, Neo, .06, 12.00w 45.88l, 07 Hole, 1-1, 2-75
Skirt, Neo, .06, 26.99w 40.55l, 36 Hole, 2-75
Skirt, Neo, .12, 05.39w 14.01l, 02 Sl, 2-75
Skirt, Neo, .18, 10.37w 27.95l, 12 H&S, 1-1, 2-83, 2-87
Skirt, Rbr, .37, 04.50w 40.94l, 06 Hole, 1-1, 2-75
Sleeve, 0.31b 0.50d 0.3l, Ss, 2-85, 2-89, 2-99
Sleeve, 0.49b 0.68d 1.2l [304ss], 2-85, 2-89
Sleeve, Cntrl, Pump, Injection [Ku], 6-25
Sleeve, Control, 5-27
Sleeve, Crankshaft, 5-17
Sleeve, Dashpo, Pump, Hyd, Gear, 4-5
Sleeve, Governor, 5-13
Sleeve, Govnr [Ku], 6-13
Sleeve, Nyl, #37 05.0l, 2-49
Sleeve, Nyl, 2.38id 25.0l, 2-49
Sleeve, P/M, 0.31b 0.50d 0.3l [430ss], 2-95, 2-101
Sleeve, P/M, 0.31b 0.50d 0.7l [430ss], 2-79, 2-95, 2-101
Sleeve, P/M, 0.31b 0.50d 0.9l [430ss], 2-37, 2-69, 2-71
Sleeve, P/M, 0.34b 0.63d 0.6l, Bnz, 2-81
Sleeve, P/M, 0.34b 0.63d 1.2l, Bnz, 2-79
Sleeve, P/M, 0.37b 0.50d 0.6l [430ss], 3-11
Sleeve, P/M, 0.47b 0.75d 0.5l [430ss], 2-73
Sleeve, Pump, Water, 4-3
Sleeve, Rbr, 3.50b 3.58d 1.8l, 3-5
Solenoid, #10, 12vdc, 4-13, 4-15, 4-17, 4-19, 4-21, 4-23
Solenoid, #8, 12vdc, 4-11, 4-13, 4-15, 4-17, 4-19, 4-21, 4-23
Solenoid, 12v, Valve, Hyd [Cec], 4-10
Solenoid, Pull, 12vdc, Damper, 2-63
Spacer, 3-7, 3-9
Spacer [Ku], 6-21
Spacer Plate, 4-8
Spacer, Coil, #8, 4-11, 4-21, 4-23
Spacer, Fan, 2-35
Spacer, Fan, Dsl [M20/T20], 2-33, 2-35
Spacer, Hub, Keyed, 3-7, 3-9
Spacer, Pad, Rbr, 2-77
Spacer, Plstc, Ny, 2-15
Spacer, Sqge, Side Brush, Rbr, 3-9
Spacer, Valve, Steering, 4-25
Spool, Pilot, Dual, Hyd, 4-21, 4-23
Spool, Pilot, Hyd, 4-11, 4-13, 4-15, 4-17, 4-19, 4-21, 4-23
Spring, 4-5, 5-7, 5-21, 6-19
Spring Kit, Scu [Cl], 4-25
Spring, Brush, 5-21, 6-19
Spring, Cmpr, 0.9od .042wir 02.0l, 2-79
Spring, Cmpr, 18.8d, 1.6w, 57.1l, 2-17
Spring, Cmpr, Plunger [Ku], 6-25
Spring, Cmpr, Relief [Ku], 6-7
Spring, Cmpr, Rocker [Ku], 6-12
Spring, Cmpr, Valve, Injector [Ku], 6-25
Spring, Delivery Valve, 5-27
Spring, Dsl, 1.00od 0.50id 1.7l, 2-81
Spring, Ext [Ku], 6-19

Spring, Extn, 0.75od X 0.09wir, 2.5l, 2-85, 2-89
Spring, Extn, 0.75od X 0.12wir, 4.3l, 2-55
Spring, Extn, 0.88od X 0.14wir, 9.0l, 2-77
Spring, Extn, 2.00od 0.25wir 07.5l, 2-73
Spring, Flat, Retainer, Angled Screen, 2-59
Spring, Flt, 0.08th, 4.50w X 07.0l, 2-77
Spring, Governor, 5-30
Spring, Governor [Ku], 6-28
Spring, Keeper, 2-81
Spring, Motor, Hyd, 4-5
Spring, Plunger, 5-27
Spring, Return, 5-29
Spring, Rocker Arm, 5-12
Spring, Start, 5-30
Spring, Start [Ku], 6-28
Spring, Tors [Ku], 6-27
Spring, Tors, 0.75id .06wir 02.8coil, 2-53
Spring, Tors, 1.13id .12wir 02.3coil Rh, 2-53
Spring, Valve, 5-12
Spring, Valve [Ku], 6-12
Spring, Wir, 0.08d, Brake, Parking, 2-53
Spring, Wir, 0.16d, Brush Retaining, 2-5
Spring, Wir, 0.25d, Return, Brake, 2-51
Squeegee Assy, Sba, Linatex, 1-1, 3-7
Squeegee Assy, Sba, Ure, 1-1, 3-7
Squeegee Kit, Rear, Replmt [M20/T20], 2-79
Squeegee Wldt, Rear, 2-79
Starter, 12vdc [Kubota], 6-19
Steer-Control, Hyd#05, 06.1 2030 (See Breakdowns), 2-17
Steer-Control, Hyd05, 06.1 2030, 4-25
Stem, Valve, Hyd, 4-13, 4-15, 4-17, 4-19, 4-21, 4-23
Stem, Valve, Hyd [4w2p], 4-15, 4-17, 4-21, 4-23
Stem, Valve, Hyd, 4w2p, 4-11, 4-13, 4-19
Stop, Rotation, 2-81
Stopper, 5-13
Stopper, Cam [Ku], 6-15
Stopper, Camshaft, 5-15
Stopper, Fuel [Ku], 6-13
Strainer, Hyd, 25gpm 100mesh Psi, 2-129
Strainer, Hyd, 25 Gpm 100 Mesh, 1-1
Strainer, Soltn, 20 Mesh, Cyl 3.5d 9.5l, 3-5
Strap, Door, Dump, 2-65, 2-67
Strap, Door, Dump, Side, 2-65
Strap, Mtg, Motor, .124.00W, 2-61
Strap, Pyp, 0.07 1.0w 18.5l, W/ Buckle, 3-61
Strap, Rbr, Tie-Down, 2/Hooks 19.0l, 2-47
Strap, Retaining, Hose, 2-95, 2-101
Strap, Sppt, 2-55
Strap, Static, Afmkt, 2-75
Strap, Tank, Gas, 2-27
Strip Mtg, Seal, 2-19
Strip, Flap, Recirculation, 2-75
Strip, Non-Slip, 0.50w 06.0l, 2-79
Strip, Rbr, 0.06 01.00W 04.0L, 2-61
Strip, Rbr, 0.06 03.54w 03.5l [Neo/60], 3-37
Strip, Rbr, 0.06 04.00w 05.0l Neo/60, 2-61
Stud, 5-7, 5-11, 5-12, 5-25, 5-29, 5-31
Stud [Ku], 6-7, 6-11, 6-12, 6-23, 6-27
Stud, .31-18 2.75l M8 X 1.25, Ss, 2-79
Stud, Ball, .39d .31-16, Gasspring, 2-15
Stud, Wheel, .50-20 X 1.50l, 0.370th, 2-49
Switch Assy, Press, 3.0, 17.5l Tube, 3-5
Switch Kit, Pump, Repair,, 4-27
Switch, Ignition [Ku], 2-13
Switch, Magneto [Ku], 6-19
Switch, Press, 10psi, Spst, 3-19
Switch, Press, 50 Psi, Pm02, 3-39
Switch, Press, Adj [4-16 In Wtr], 2-63
Switch, Press, Dpdt 0006psi, 2-23
Switch, Press, Spdt 0008psi, 2-63
Switch, Rocker, Dpdt Mom/Off/Mom, 2-13
Switch, Rocker, Dpdt On/None/On, 3-65
Switch, Rocker, Dpdt On/Off/On, 2-13
Switch, Rocker, Spst, Mom, 3-37
Switch, Seat, 4-31
Switch, Seat, No [Delta 6440-04], 2-15
Switch, Snap, 15a No, Rlr, 2-57
Switch, Temp [160F], 2-61
Switch, Temp, Sealed, Nc, 2-61
Switch, Thermostat, Water, 2-23, 2-24

T

Tank Kit, Soltn, W/ Bracket, Replmt, 2-91
Tank, Coolant, 03.30w 4.7hi 04.7l,1liter, 2-45
Tank, Coolant, 03.6W 04.1HI 05.5L,1Liter, 2-45
Tank, Coolant, 04.7 03.3 4.7deep, 1liter, 2-39
Tank, Detgt, Trimmed, 3-5
Tank, Fuel, 11.2gal [M20/T20], 2-27
Tank, Fuel, 11.2gal, Dsl, Replmt [2007], 2-27
Tank, Fuel, 11.2gal, Dsl, Replmt, Na[08], 2-27
Tank, Fuel, 11.2gal, Dsl, Replmt, Tj[08] (Japan Only), 2-27
Tank, Recvy, Trimmed, 2-99
Tank, Soltn, W/ Label [M20], 2-91
Tappet, 5-15
Tappet [Ku], 6-15
Tappet, Pump, Injection [Ku], 6-25
Terminal, Bullet, Mal, .157d, 12ga, 3-49, 3-51, 3-52, 3-53
Terminal, Fem, Mp280, Sealed, 18-16ga, 4-27
Terminal, Tab, .25 .19h .84l, 2-23
Thermostat, 180deg, 1.7d [Ku], 5-31, 6-29
Thrust Bearing, 4-8
Tie, Cable, 6.0l, 1.25d Max, 3-52, 3-53
Tie, Cable, 11.3l, 2.75d Max, 3-19
Tie, Cable, Nyl, 07.3l .19w 1.8 Max D, 2-13, 2-29, 2-39, 2-41, 2-43, 2-45, 2-49, 2-71, 3-19, 3-39, 3-52, 3-53
Tie, Cable, Nyl, 14.5l .30w 4.0 Max D, 4-29
Tie, Cable, Nyl, 15.3l . W 4.5 Max D, 2-39, 3-19, 3-25, 3-33, 3-43
Tie, Cable, Nyl, 15.3L . W 4.5 Max D, 2-61
Timer, 12vdc, 10 Sec, 2-29
Tire Assy, Solid, 18.0x6.0 4.5bc/5bolt, 1-1
Tire, Drive, Scrbr, Non-Skid, 18.0X6.0, 2-49
Tire, Drive, Scrbr, Pu, Grey, 18.0X6.0 (Optional Polyurethane), 2-49
Tire, Idler, Scrbr, Blk, 16.0X3.5, 2-51
Tire, Idler, Scrbr, Non-Skid, 16.0x3.5 (Optional), 2-51
Tire, Idler, Scrbr, Pu, Grey, 16.0X3.5 (Optional Polyurethane), 2-51
Tower, Wldt, Lift, Lh, Replmt [M20], 2-7
Tower, Wldt, Lift, Rh, Replmt [M20], 2-7
Track Assy, Slide, 4-31
Transport Kit, Ci [M20/M30}, 3-67
Tray Wldt, Drip, Dsl, 2-29
Tray Wldt, Drip, Fuel, 2-29
Tray Wldt, Fuel, 2-27
Tray Wldt, Perma-filter (Replaced By none), 2-61
Tray, Perma-Filter, 2-61
Tread, Non-Skid, 01.9w 08.0l, 2-7
Tread, Non-Skid, 02.2w 11.5l, 3-13
Tread, Non-Skid, 03.0w 11.6l, 2-7, 2-9, 2-54
Tube Assy, Plug, Drain, 2-99
Tube Kit, Hyd, Case Drain [M20/T20], 2-71
Tube Kit, Tank, Recvy, Replmt, 2-101
Tube Kit, Tank, Soltn, Replmt, 2-95
Tube Wldt, Arm, Safety, 2-57
Tube Wldt, Exhaust, 1.5d, 4 Hole Flng, 2-37
Tube Wldt, Leg, Ohg, Lh, Pntd, 3-55
Tube Wldt, Leg, Ohg, Rh, Pntd, 3-55
Tube Wldt, Plug, Drain, 2-99
Tube Wldt, Torque, 2-73
Tube, 0.38id 0.75od 00.3l, Ss, 2-35
Tube, 0.50d 0.32b 00.4l, Ss, 2-95, 2-101
Tube, 00.38d 00.26b 00.3l Stl Plt, 2-55
Tube, 00.50d 00.38b 00.6l Stl, 2-55
Tube, 2.90id 3.00od 02.4l, Ss, 2-95, 2-101
Tube, Acrylic, Hose, Pinch, 2-101
Tube, Breather, 5-10, 6-10
Tube, Distribution, Water, 2-97
Tube, Drain, Starter, 6-19
Tube, Exhaust, 1.5d, 2-37
Tube, Exhaust, Dsl, 2-37
Tube, Hyd, 08 Jf08/Jf08, 3-15
Tube, Hyd, 08 Jf08/Jm08, 2-69
Tube, Hyd, Brush Return, W/ Cd [M20/T20], 2-71
Tube, Hyd, Main Return, 2-127
Tube, Hyd, Main Return [G/Lp Mit2013], 2-127
Tube, Hyd, Rear Sqge [M20], 2-127
Tube, Hyd, Sqge, 2-127
Tube, Hyd, Swp, 2-131

Tube, Injector, Pipe #1 [Ku], 6-20
Tube, Injector, Pipe #2 [Ku], 6-20
Tube, Injector, Pipe #32 [Ku], 6-20
Tube, Pin [Ku], 6-3
Tube, Pvc, Clr, 4.0l [Shc80], 3-23, 3-25
Tube, Radiator, Lower, Dsl, 2-39, 2-45
Tube, Rnd, 1.75d 0.77b 01.1l, Stl, Pntd, 2-49
Tube, Seat, Valve, Oil [Ku], 6-7
Tube, Transition, Casting, 2-107
Tube, Vacuum, 2-63
Tube, Vinyl, Pump, Water, 4-3
Tube, Wand, Vacuum, Metal, 3-63
Tube, Wand, Vacuum, Metal [1pick=1box], 3-61
Tubing Connctr.Kit, Gorman Pmp, 4-26

U

Upper Hsg Kit, Pump, Repair,, 4-27

V

Valve Assy [Proportional], 4-17, 4-23
Valve Assy, Relief [Cl], 4-25
Valve Assy, Water, Solenoid , 12vdc, 2-97
Valve Assy, Water, Solenoid, 12vdc, 3-13, 3-43
Valve Kit, Poppet, Gorman Rupp, 4-26
Valve Stem, N.O.Valve, Hyd, 4-10
Valve, Breather, Complt, 5-10, 6-10
Valve, Check, 4-11, 4-13, 4-15, 4-17, 4-19, 4-21, 4-23
Valve, Check, 0002psi [FaST Ii+], 4-32
Valve, Check, 0002psi Bm04/Bm04, 3-21
Valve, Check, 0005psi [FaST Ii+], 4-32
Valve, Check, 0005psi Bm06/Bm08, 3-29
Valve, Check, 0005psi Pm04/Bm06, 3-39
Valve, Check, 2gpm .5psi Bm08/Bm08, 3-43
Valve, Check, Pump, Water, 4-3
Valve, Cntrl, Hyd, 4-19
Valve, Cntrl, Hyd (See Breakdowns), 2-131
Valve, Cntrl, Hyd [M20 And T20] (Replaced by 1037805), 4-13
Valve, Cntrl, Hyd [M20 And T20] (See Breakdowns), 3-15
Valve, Cntrl, Hyd [M20], 4-11
Valve, Cntrl, Hyd [M20] (See Breakdowns), 2-131
Valve, Cntrl, Hyd, Solenoid, 03/16gpm, 4-15, 4-17
Valve, Cntrl, Hyd, Solenoid, 03/16gpm (See Breakdowns), 3-15
Valve, Cntrl, Hyd, Solenoid, 12vdc 10gpm, 4-23
Valve, Cntrl, Hyd, Solenoid, 12vdc 10gpm (See Breakdowns), 2-133
Valve, Cntrl, Solenoid, 4-11, 4-21, 4-23
Valve, Delivery, 5-27
Valve, Eng [Delivery, Ku], 6-25
Valve, Exhaust, 5-12
Valve, Exhaust [Ku], 6-12
Valve, Hyd Cartridge 10no/-0, 4-10
Valve, Hyd, Check, Jm08/Om08 5000psi, 3-15
Valve, Hyd, Relief, 4-11
Valve, Hyd, Solenoid 12vdc 3000psi (See Breakdowns), 3-15
Valve, Hyd, Solenoid, 12vdc, 4-21
Valve, Hyd, Solenoid, 12vdc (See Breakdowns), 2-133
Valve, Inlet, 5-12
Valve, Intake [Ku], 6-12
Valve, Motor, Hyd, 4-5
Valve, Relief, 4-13, 4-15, 4-17, 4-19, 4-21, 4-23
Valve, Relief, 0600Psi, 2-133
Valve, Relief, 3000 Psi, 4-7
Valve, Relief, 4000 Psi, 4-7
Valve, Shutoff, 3-65
Valve, Solenoid, 12vdc, Water Flow, 3-25, 3-33
Valve, Stem, No, 4-13, 4-15, 4-17, 4-19, 4-21, 4-23
Valve, Vent, Air, Float Type, 3-39
Valve, Water, 12vdc, 6.0mm, 04pf, 3-19
Valve, Water, Solenoid, 12vdc 0.08pf, 3-3
Valve, Water, Solenoid, 12vdc 6.0mm Pf04, 3-29
Video, Oprtr, Dvd [W/Checklist M20], 3-71
Vr, Plug, Orifice, Valve, Hyd, .040, 4-11

W

Wand Kit, Vacuum, Ci [M20], 3-61, 3-63
Wand, Clean-Out, 3-65
Washer 1, 5-12
Washer 2, 5-12
Washer, Adjusting [Ku], 6-21
Washer, Belleville, .31, 2-55
Washer, Collar, Gear [Ku], 6-15
Washer, Flat [Ku], 6-12, 6-27
Washer, Flat, .781b 1.63od .16, Stl, Blk, 2-49
Washer, Flat, .78b 1.75d .18, Ss, 2-99
Washer, Flat, #06, 2-39, 2-61
Washer, Flat, #08, 2-15
Washer, Flat, #10, 2-15, 2-21, 2-33, 2-47, 2-57, 3-65
Washer, Flat, #10 Ss, 2-55
Washer, Flat, #10, Ss, 3-3, 3-19, 3-25, 3-65, 3-69
Washer, Flat, 0.25 Fender, 2-107
Washer, Flat, 0.25 Fendr, 2-15
Washer, Flat, 0.25 Sae, 2-15, 2-17, 2-61, 2-63
Washer, Flat, 0.25 Std, 2-47, 2-53, 2-55, 3-19, 3-21
Washer, Flat, 0.25, Fendr, 2-41, 2-43
Washer, Flat, 0.25, Sae, 2-27, 2-31, 2-33, 2-35, 2-37, 2-55, 2-107, 3-37
Washer, Flat, 0.25, Ss, 2-61, 2-65, 2-67, 2-75, 2-97, 2-99, 3-67
Washer, Flat, 0.25, Std, 2-9, 2-29, 2-33, 2-39, 2-41, 2-43
Washer, Flat, 0.25b 0.56d .05, Pl, 10, 2-15
Washer, Flat, 0.27B 0.69D .05, Ss, 2-5, 2-92, 3-29, 3-37, 3-57, 3-67
Washer, Flat, 0.31 Sae, 2-9, 2-15, 2-21, 2-55, 2-85, 2-89, 2-91, 2-95, 2-101
Washer, Flat, 0.31 Std, 2-55
Washer, Flat, 0.31, Ss, 2-31, 2-37, 2-39, 2-61, 2-65, 2-67, 2-75, 2-77, 2-79, 2-81, 2-85, 2-89, 2-95, 2-101, 3-3, 3-7, 3-11
Washer, Flat, 0.31, Std, 2-7, 2-9, 2-15, 2-17, 2-19, 2-24, 2-27, 2-29, 2-33, 2-35, 2-37, 2-39, 2-41, 2-45, 2-49, 2-53, 2-69, 2-71, 2-73, 2-75, 2-95, 2-99, 2-101, 2-127, 2-131, 3-11, 3-13, 3-15, 3-55, 3-67
Washer, Flat, 0.32b 1.00d .12, Ss, 2-9, 2-15, 2-21, 2-59, 2-65, 2-67, 2-91, 2-95, 2-99, 2-101, 2-103, 2-105, 2-131, 2-133, 3-5, 3-21, 3-29, 3-37, 3-47, 3-49, 3-51, 3-65
Washer, Flat, 0.34b 0.75d .12 [Viton], 3-19
Washer, Flat, 0.38 Sae, 2-55, 2-73, 2-81, 2-107, 2-125
Washer, Flat, 0.38 Std, 2-7, 2-15, 2-55, 2-63, 2-127, 3-7, 3-9, 3-55, 3-61, 3-69
Washer, Flat, 0.38, Sae, 2-23, 2-31, 2-33, 2-41, 2-43
Washer, Flat, 0.38, Std, 2-33, 2-35, 2-41, 2-43, 2-45
Washer, Flat, 0.38b 0.88d .08, Ss, 2-105
Washer, Flat, 0.38b 1.25d .12, Neo, 2-59, 2-65, 2-67
Washer, Flat, 0.40b 1.12d .12, Ss, 2-107
Washer, Flat, 0.40b 1.12d .12, Ss, 2-39, 2-41, 2-43, 2-61, 2-65, 2-67, 2-81, 2-103, 3-55
Washer, Flat, 0.41b 1.25d .12, Pye, 2-15
Washer, Flat, 0.44b 1.00d .08, Ss, 2-7, 2-57, 2-77, 3-13
Washer, Flat, 0.50 Sae, 2-17, 2-51, 3-11
Washer, Flat, 0.50, Sae, 2-39, 2-63
Washer, Flat, 0.50, Std, 2-23, 2-24
Washer, Flat, 0.53b 1.88d .12, Stl, Pl, 2-9, 2-23, 2-77, 2-79
Washer, Flat, 0.56b 1.38d .11, Ss, 2-73, 2-77, 2-85, 2-89
Washer, Flat, 0.62 Sae, 2-19
Washer, Flat, 0.66b 1.00d .12, Rbr, 3-3, 3-65
Washer, Flat, 0.69b 1.19d .06, Stl, Pl, 2-81
Washer, Flat, 0.75 Sae, 2-49
Washer, Flat, 0.76b 1.50d .06, Ss, 2-51
Washer, Flat, 0.79b 1.18d .06, Nyl, 2-95, 2-101
Washer, Flat, 0.81b 1.06d .06, Stl, 2-39, 2-41, 2-43
Washer, Flat, 06, 3-63
Washer, Flat, 08, 3-37
Washer, Flat, 08, Ss, 4-29
Washer, Flat, 1.10b 1.50d .12, Stl, Pl, 2-35

Washer, Flat, 1.15b 1.75d .08, Stl, 2-13
Washer, Flat, 1.26b 1.88d .13, Stl, 3-13
Washer, Flat, 1.26B 1.88D .13, Stl, Pl, 2-7, 2-63
Washer, Flat, 1.39b 2.12d .13, Stl, 2-49
Washer, Flat, 10, 2-35, 3-37, 3-47, 3-49, 3-51, 3-52, 3-53
Washer, Flat, 10, Ss, 2-35, 3-29, 3-33, 3-43, 3-57
Washer, Flat, 2.16b 3.50d .16, Felt, 2-49
Washer, Flat, Belleville, .25, 2-85, 2-89
Washer, Flat, Belleville, .31, 2-35, 2-95, 2-101, 2-103, 3-11
Washer, Flat, Belleville, .38, 2-77, 2-85, 2-89
Washer, Flat, Belleville, .50, 2-85, 2-89, 2-105
Washer, Flat, Belleville, M10, 2-59
Washer, Flat, M21.0b X 37d X 3, 2-51
Washer, Flat, Pump, Hyd, 4-7
Washer, Lock, Int-Ext, 0.31, 2-75
Washer, Lock, Int-Ext, 10, 2-21
Washer, Lock, Int, #06, 2-61
Washer, Lock, Int, #08, Ss, 2-63
Washer, Lock, Int, #10, Ss, 3-19
Washer, Lock, Int, 0.25, 3-37
Washer, Lock, Int, 0.38, 2-33, 2-35
Washer, Lock, Int, 08, Ss, 4-29
Washer, Lock, Split [Ku], 5-31, 6-7, 6-23, 6-27
Washer, Plain, 5-12, 5-29, 5-30
Washer, Plain [Ku], 6-18, 6-21
Washer, Pump, Hyd [En], 4-7
Washer, Rbr, 4-3
Washer, Sealing, 0.28b 0.75d Ss, Neo, 2-99
Washer, Shaft, Rocker [Ku], 6-12
Washer, Shld, Nyl [8-32], 2-13
Washer, Spring, 5-7, 5-25, 5-29
Washer, Thrust, 5-13
Washer, Thrust [Ku], 6-13
Washer, Thrust, 0.34b 1.50d .06, 2-95, 2-101
Washer, Thrust, 0.61b 1.25d .06, Fgl, 2-81, 2-83, 2-85, 2-87, 2-89, 3-7
Washer, Thrust, 1.00b 1.75d 0.13w, Fbr, 3-11
Weight, Comp, Govnr [Ku], 6-13
Weight, Eccentric, 2-61
Wheel, 06.0D 2.00W 1.19B, Gray Rbr, 2-7, 2-63, 3-13
Wheel, 3.0d 1.38w 0.50b, 1-1, 2-81
Wheel, 4.0d 0.89w 0.64b, 2-79
Wheel, Steering, 14.3d 0.81b 36tooth, 2-17
Wire, 10ga 16.0l Blk .25ring /.38ring, 2-35
Wire, Tie [W/.25” Fir Tree Clip], 2-7

Y

Yoke, 6-19