By Tennant Company

ASC-15
ASC-57

All Surface Cleaner

Parts Manual

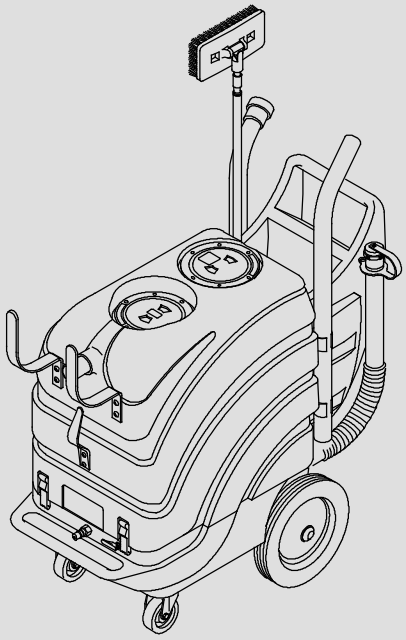

Model Part No.:
9007354 - ASC-15 (120V)
9007449 - ASC-15 (120V) CSA
9007451 - ASC-57 (220V/60Hz)
9007450 - ASC-57 (230V/50Hz) EMC

www.tennantco.com

www.nobles.com

To view, print or download the latest manual, visit:

www.tennantco.com/manuals

9007517
Rev. 07 (09-2024)

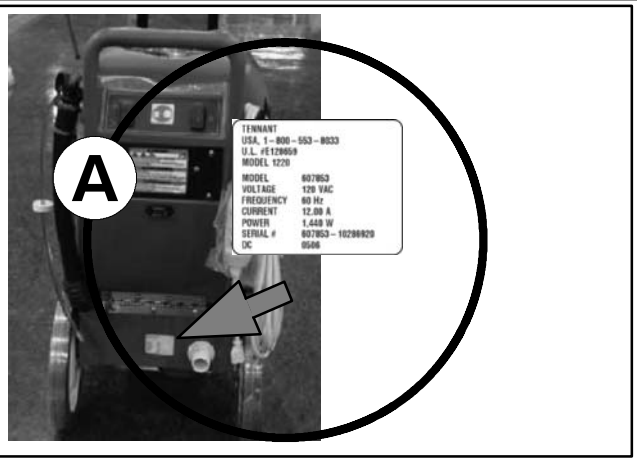

Ref	Part No.	Serial Number	Description	Qty.
1	82681	(000000-)●	acket Wldt, Lpg Mount	1
▽ 2	63810	(000000-)	ch Assy, Lpg Tank Mtg, W/Nut	4
▲ 3	51839	(000000-)	t Adjustable, Lpg Tank Mtg	2
4	49263	(000000)	Tie, Cable	3
	82556	(000000- 001039)	Bracket, Vaporizer	1
	54930	(000000-)	Vaporizer	1

HOW TO ORDER PARTS - See diagram above

Only use TENNANT Company supplied or equivalent parts. Parts and supplies may be ordered online, by phone, by fax or by mail.

Follow the steps below to ensure prompt delivery.

1. **(A)** Identify the machine model.
2. **(A)** Identify the machine serial number from the data label.
3. **(B)** Ensure the proper serial number is used from the parts list.
4. Identify the part number and quantity. Do not order by page or reference numbers.
5. Provide your name, company name, customer ID number, billing and shipping address, phone number and purchase order number.
6. Provide detail shipping instructions.

(C) ▽ - identifies an assembly
▲ - identifies parts included in assembly
(D) ● - identifies a recommended stock item

Please fill out at time of installation for future reference.

Model No. - _____

Serial No. - _____

Machine Options - _____

Sales Rep. - _____

Sales Rep. phone no. - _____

Customer ID Number - _____

Installation Date - _____

Tennant Company
10400 Clean Street
Eden Prairie, MN 55344-2650
USA
Phone: (800) 553-8033

www.tennantco.com
www.nobles.com

Specifications and parts are subject to change without notice.

Copyright © 2010-2024 TENNANT Company, Printed in U.S.A.

CN

如何订购部件 – 参见下表

仅使用 TENNANT 公司提供的或同等部件。部件和供应可以在线订购，通过电话、传真或邮件订购。

请遵循下面的步骤确保及时交付。

1. (A) 确定机器型号。
2. (A) 从数据标签确定机器序列号。
3. (B) 确保使用部件列表中的正确序列号。
4. 确定部件号和数量。
   不要按页面或参考编号订购。
5. 提供您的姓名、公司名称、客户 ID 号、付帐和送货地址、
   电话号码和采购单编号。
6. 提供详细的送货说明。

(C) ▽ – 确定组件
▲ – 确定组件中包含的组件
(D) ● – 确定建议的库存项

请在安装时填写供未来参考。

型号 – _____

序列号 – _____

机器选项 – _____

销售代表– _____

销售代表电话号码 – _____

客户 ID 编号 – _____

安装日期 – _____

ES

CÓMO SOLICITAR PIEZAS - Consulte el diagrama anterior.

Utilice sólo las piezas suministradas por TENNANT Company o piezas equivalentes. Puede solicitar las piezas a través de internet, por teléfono, por fax o por correo.

Siga los siguientes pasos para que la entrega sea rápida.

1. **(A)** Indique el modelo de máquina.
2. **(A)** Indique el número de serie de la etiqueta de datos.
3. **(B)** Asegúrese de que indica el número de serie correcto de la lista de piezas.
4. Indique la cantidad y el número de la pieza.
   No realice el pedidoindicando el número de página o el de referencia.
5. Incluya su nombre, el nombre de la empresa, el ID de cliente,
   las direcciones de envío y facturación, el número de teléfono y el número del pedido de compra.
6. Facilite instrucciones de envío.

(C) ▽ - identifica un conjunto
▲ - identifica piezas de un conjunto
(D) ● - identifica un artículo que conviene tener en stock

Rellene estos datos cuando realice la instalación para utilizarlos como referencia en el futuro.

Nº modelo - _____

Nº serie - _____

Opciones de la máquina - _____

Vendedor - _____

Nº teléfono vendedor - _____

Nº cliente - _____

Fecha de instalación - _____

FR

COMMENT COMMANDER DES PIÈCES DÉTACHÉES - Voir le schéma ci- dessus.

Utilisez uniquement des pièces fournies par la société TENNANT ou équivalentes. Les pièces et fournitures peuvent être commandées en ligne, par téléphone, fax, ou par courrier.

Suivez les étapes ci- dessous pour assurer une livraison rapide.

1. **(A)** Identifiez le modèle de la machine.
2. **(A)** Identifiez le numéro de série de la machine, à partir de l'étiquette signalétique.
3. **(B)** Assurez- vous que le numéro de série correct est utilisé à partir de la liste de pièces détachées.
4. Identifiez le numéro de pièce et la quantité. Ne commandez pas par page ou numéros de référence.
5. Fournissez votre nom, le nom de votre société, votre numéro d'identification de client, l'adresse de facturation et d'expédition, le numéro de téléphone et le numéro du bon de commande.
6. Fournissez des instructions d'expédition détaillées.

(C) ▽ - identifie un assemblage
▲ - identifie les pièces composant l'assemblage
(D) ● - identifie un article de stock recommandé

A remplir au moment de l'installation à titre de référence.

Nº du modèle - _____

Nº de série - _____

Options de la machine - _____

Agent commercial - _____

Nº tél. de l'agent commercial - _____

Numéro d'identification client - _____

Date d'installation - _____

JP

パーツの発注方法 ?上記の図を参照してください

TENNANT社製のパーツまたは同等品のみをお使いください。パーツやサプライ品のご注文は、オンライン、電話、FAX、または手紙でお願いいたします。

確実にお届けできるように、以下の情報お知らせください。

1. (A) 製品のモデル名をお知らせください。
2. (A) 製品のデータラベルに印刷されているシリアル番号 をお知らせください。
3. (B) パーツリストを参照して、シリアル番号が正しいかご確認ください。
4. パーツ番号と数量をお知らせください。マニュアル/カタログの
   ページ番号や参照番号でのご注文はご遠慮ください。
5. お客様のお名前、会社名、顧客ID番号、請求/発送先住所、電話番号、注文書番号をお知らせください。
6. 発送に関するご希望があれば、明記してください。

(C) ▽ – アセンブリを示します
▲ – アセンブリに含まれるパーツを示します
(D) ● – 当社推薦の在庫用品を示します

後日確認できるように、設置時に記入してください。

モデルNo. – _____

シリアルNo. – _____

製品のオプション– _____

販売代理店 – _____

販売代理店の電話番号 – _____

顧客ID番号 – _____

設置日 – _____

STANDARD PARTS

UPPER HOUSING GROUP 6
UPPER HOUSING GROUP - CONTD 8
LOWER HOUSING GROUP
(S/N 11082734 -) 10
LOWER HOUSING GROUP - CONTD
(S/N 11082734 -) 12
LOWER HOUSING GROUP
(S/N 0000000 - 11082733) 14
LOWER HOUSING GROUP - CONTD
(S/N 0000000 - 11082733) 16
HANDLE GROUP 18
PLUMBING GROUP (S/N 11082734 -) . . . 20
PLUMBING GROUP
(S/N 0000000 - 11082733) 22
SOLUTION PUMP GROUP
(S/N 0000000 - 11082733) 24
WAND/HOSE TOOL ACCESSORY KIT 26
TELESCOPING BRUSH 27
VACUUM AND BLOWER HOSES 27
SPRAY GUN AND SOLUTION HOSE 28
GLASS SQUEEGEE 28
WIRING DIAGRAM, 120V 29
WIRING DIAGRAM, 220V/230V 30

OPTIONS

SOLUTION TANK FILL HOSE 31
FLOOR TOOL, HIGH PRESSURE 13 in
(330 mm) 32

UPPER HOUSING GROUP

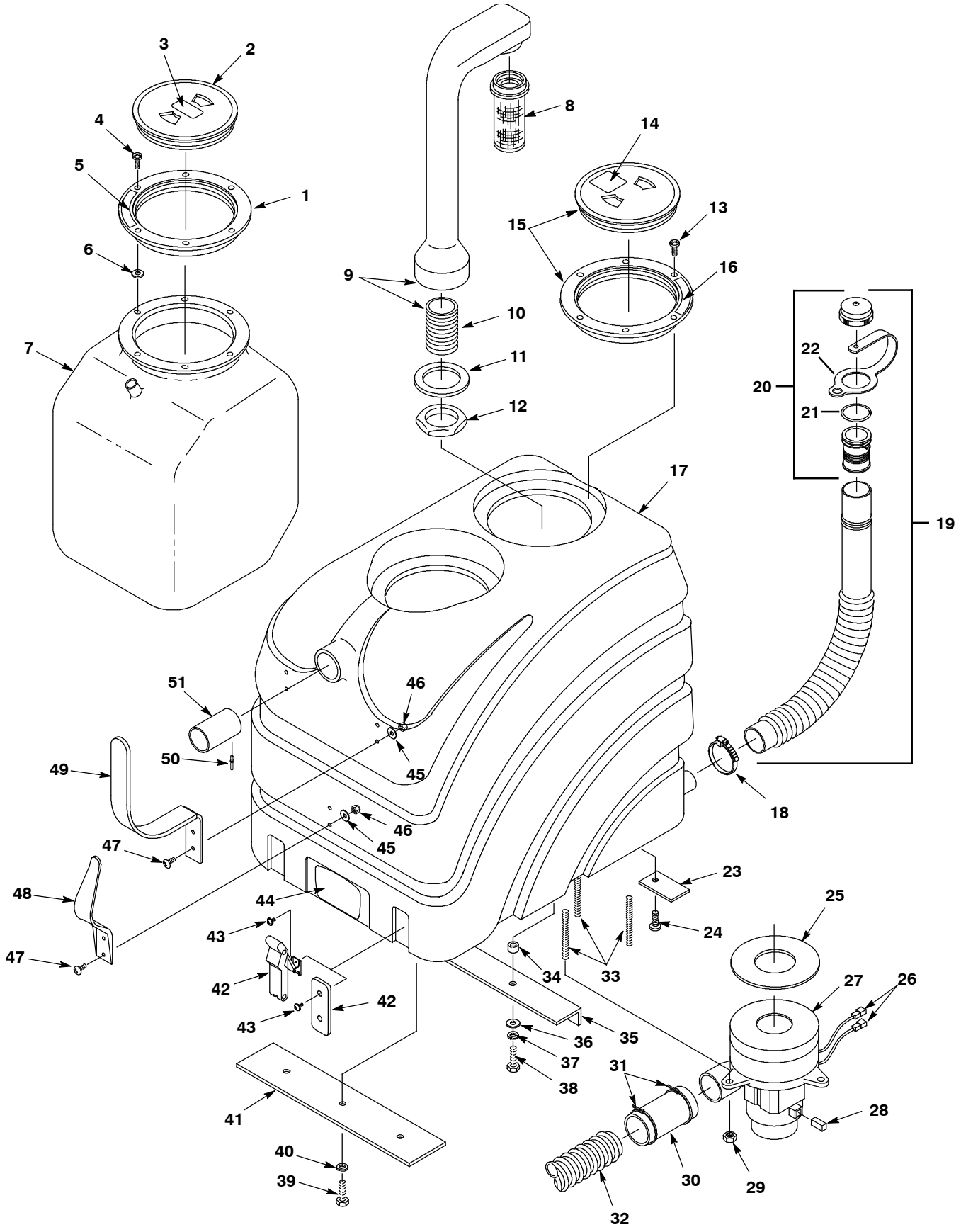

UPPER HOUSING GROUP

	Ref.	Part No.	Serial Number		Description	Qty.
∇		100103	(00000000-	)●	Cover Assy, Clr [W/ Countersunk Holes]	1
▲	1	100109	(00000000-	)	Vr, Lid, Ring, Outer	1
▲	2	100105	(00000000-	)●	Vr, Cover, Lid, Clr Cntr	1
	3	120906	(00000000-	)	Label, Warning [Important- Drain]	1
	3	993852	(00000000-	)	Label, Warning [Electrical Hazard]	1
	4	140900	(00000000-	)	Screw, Trs, Phl, 10- 24 X 0.75, Ss	6
	5	120907	(00000000-	)	Label, Warning [Important- Always Close]	1
	6	140000	(00000000-	)	Washer, Flat, 0.28b 0.62d .04, Ss	6
	7	602783	(00000000-	)	Tank, Rm- Blk, Pvc, Trimmed [E/Tr1500]	1
	8	180613	(00000000-	)●	Float, Shutoff, 1- Ball, 2.00d	1
∇	9	602448	(00000000-	)	Pipe, Standpipe, W/ Nipple [L20]	1
▲	10	606088	(00000000-	)	Fitting, Plstc, Str,Pm24/Pm24[Nipl Cpvc]	1
	11	101714	(00000000-	)	Gasket, Chamber, Air, Waste	1
	12	210240	(00000000-	)	Nut, Hex, Flng, Pf24, Metal	1
	13	140825	(00000000-	)	Screw, Pan, Phl, 06 X 0.50, Fmg/Ab, Blk	6
	14	609756	(00000000-	)	Label [Safety Glasses Required,Textless]	1
	15	100102	(00000000-	)●	Cover Assy, Clr, W/ Std Hole	1
	16	120907	(00000000-	)	Label, Warning [Important- Always Close]	1
	17	1033142	(00000000-	)	Tank, Recvy, Rm- Cphg, Afmkt [C- 15]	1
	18	11531	(00000000-	)	Clamp, Hose, Wormdrive, 1.06- 2.00d, .56w	1
∇	19	1007072	(00000000-	)●	Hose Assy, Drain, 1.50id X 21.9l, Blk	1
▲∇	20	1008639	(00000000-	)●	Cap, Drain Assy	1
▲▲	21	1008637	(00000000-	)●	Seal, Org, 1.48id 1.76od	1
▲▲	22	1019563	(00000000-	)●	Strap, Cap, Drain	1
	23	230845	(00000000-	)	Plate, Clamp, Cord	1
	24	140834	(00000000-	)	Screw, Flt, .25- 20 X 0.62, Phl, Ss	1
	25	100118	(00000000-	)●	Gasket, Vac Mtr 1/4 X 5.7d	1
	26	130133	(00000000-	)	Terminal, Mal, .25 22- 18ga Red, F- Ins	2
∇	27	130416	(00000000-	)●	Fan, Vacuum, 5.7d, 120vac, 3 Stage [Bpt] (120V)	1
▲	28	190160	(00000000-	)●	Brush, Carbon [130416/483, 1pick=1pkg]	1
▲		130487	(00000000-	)●	Housing, Motor, Fan, Vent	1
∇	27	130998	(00000000-	)●	Fan, Vacuum, 5.7d, 240vac, 3 Stage [Bpt] (220V/230V)	1
▲	28	190164	(00000000-	)●	Brush, Carbon [130988, 1pick=1pkg]	1
	29	41169	(00000000-	)	Nut, Hex, Lock, .25- 20, Nl, Ss	3
	30	612499	(00000000-	)●	Muffler, Exhaust, Vacfan	1
	31	130040	(00000000-	)	Tie, Cable, Nyl, 06.0l .12w	2
	32	160629	(00000000-	)●	Hose, Vacuum, 2.00id X 028.0l, Blk	1
	33	140258	(00000000-	)	Screw, Stud, .25- 20 X 4.25 Pl	3
	34	140134	(00000000-	)	Sleeve, P/M, 0.25b 0.38d 0.3l, Pl	2
	35	230846	(00000000-	)	Bracket, Sppt, Tank	1
	36	140000	(00000000-	)	Washer, Flat, 0.28b 0.62d .04, Ss	2
	37	140016	(00000000-	)	Washer, Lock, Split, 0.25, Ss	2
	38	24672	(00000000-	)	Screw, Hex, .25- 20 X 0.75, Ss	2
	39	01697	(00000000-	)	Screw, Hex, .25- 20 X 0.62, Ss	3
	40	140016	(00000000-	)	Washer, Lock, Split, 0.25, Ss	3

∇ ASSEMBLY

▲ INCLUDED IN ASSEMBLY

UPPER HOUSING GROUP - CONTD

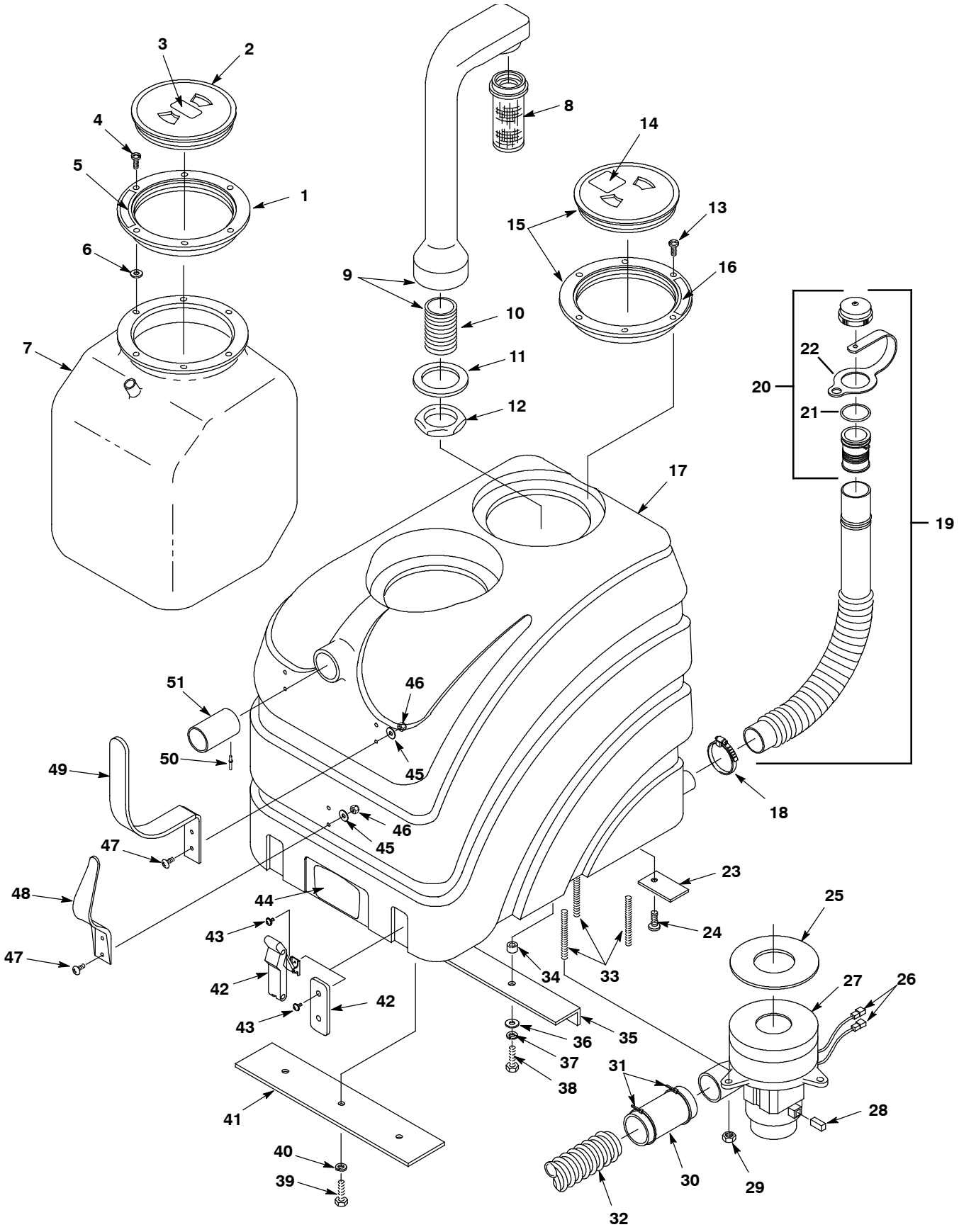

UPPER HOUSING GROUP - CONTD

Ref.	Part No.	Serial Number	Description	Qty.
41	230946	(00000000-)	Bracket, Brace, Tank, Front	1
42	49800	(00000000-)●	Latch (Standard Models)	2
42	610207	(00000000-)	Strap, Tank (CSA & EMC Models)	2
43	609980	(00000000-)	Screw, Trs, Phl, 08- 32 X 0.38, Sems (Standard Models)	8
43	609980	(00000000-)	Screw, Trs, Phl, 08- 32 X 0.38, Sems (CSA & EMC Models)	4
44	1060465	(00000000-)	Label, Logo, Cmdty, Dual, Small	1
44	1060463	(00000000-)	Label, Logo, Cmdty, Tco, Small	1
45	76426	(00000000-)	Washer, Sealing, 0.28b 0.75d Ss, Neo	6
46	41169	(00000000-)	Nut, Hex, Lock, .25- 20, Nl, Ss	6
47	140840	(00000000-)	Screw, Rnd, Phl, .25- 20 X 1.00, Ss	6
48	602750	(00000000-)	Hook, Cord [Fr/ C Record]	1
49	610279	(00000000-)	Hook, Hanger, Hose	2
50	140713	(00000000-)	Rivet, Blind, .188d X 0.58, Alm	1
51	230905	(00000000-)	Tube, 1.40id 1.50od 03.0l, Ss, Hole	1

LOWER HOUSING GROUP (S/N 11082734 -)

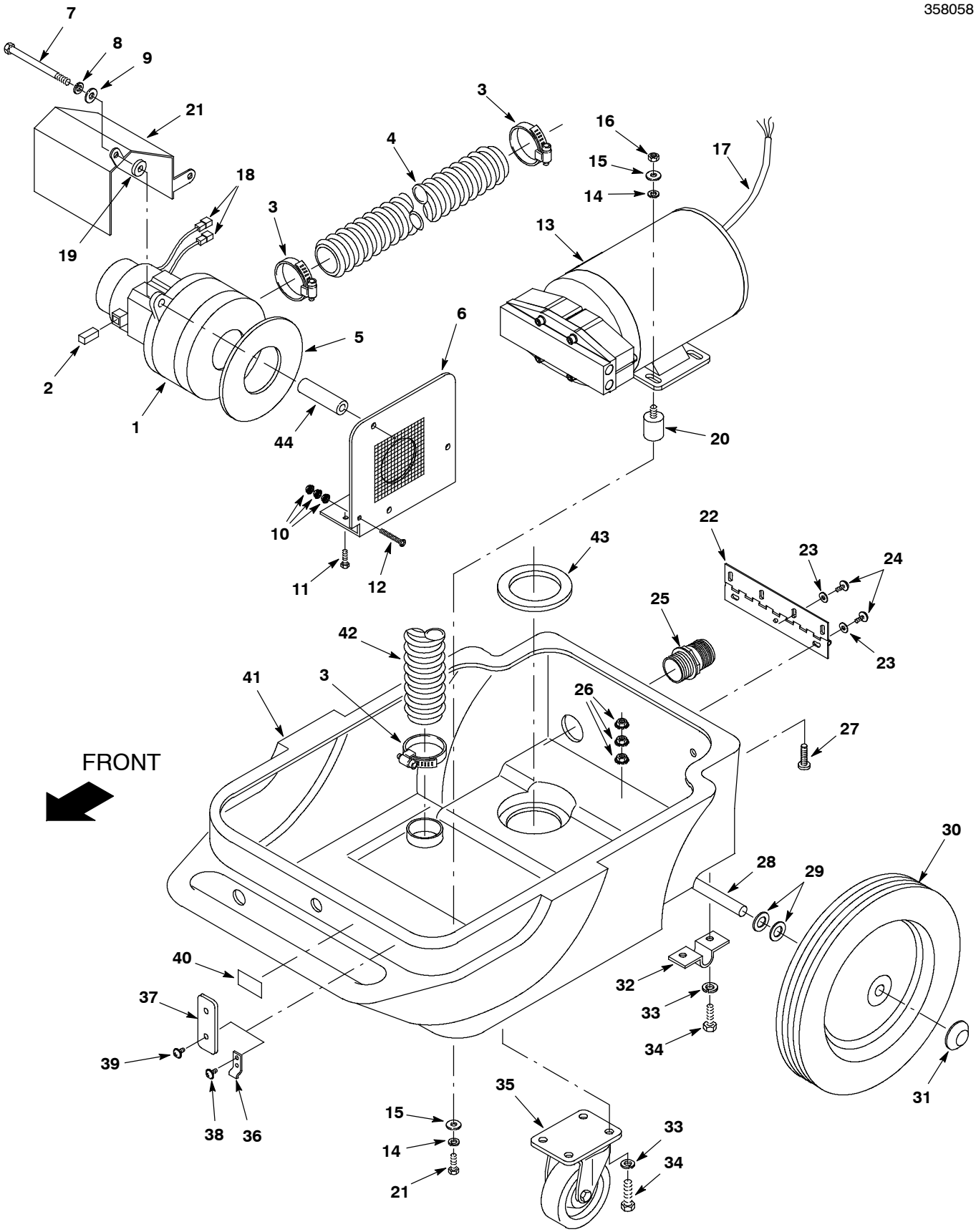

LOWER HOUSING GROUP (S/N 11082734 -)

	Ref.	Part No.	Serial Number		Description	Qty.
∇	1	605278	(00000000-	)●	Fan, Vacuum, 5.7d, 120vac, 2 Stage (120V)	1
▲	2	190155	(00000000-	)●	Brush, Carbon [130402,18,14, 1pick=1pkg]	1
∇	1	130403	(00000000-	)●	Fan, Vacuum, 5.7d, 240vac, 2 Stage (220V/230V)	1
▲	2	190158	(00000000-	)●	Brush, Carbon [130403, 1pick=1pkg]	1
▲		130487	(00000000-	)●	Housing, Motor, Fan, Vent	1
	3	140308	(00000000-	)	Clamp, Hose, Wormdrive, 1.31- 2.25d, Ss	3
	4	160482	(00000000-	)●	Hose, Vacuum, 2.00id X 013.0l, Blk	1
	5	100038	(00000000-	)●	Gasket, .50, 02.63id 05.75od, Adh [Epdm]	1
	6	609652	(00000000-	)	Bracket, Mtg, Vacuum Motor	1
	7	2998.28	(00000000-	)	Screw, Hex, .25- 20 X 3.50, Pl	3
	8	140016	(00000000-	)	Washer, Lock, Split, 0.25, Ss	5
	9	140000	(00000000-	)	Washer, Flat, 0.28b 0.62d .04, Ss	5
	10	140519	(00000000-	)	Nut, Hex, Lock, #10- 24, Kep, Ss	3
	11	24672	(00000000-	)	Screw, Hex, .25- 20 X 0.75, Ss	2
	12	140804	(00000000-	)	Screw, Rnd, Phl, 10- 24 X 1.00, Ss	1
∇	13	9022520	(11082734-	)●	Pump Kit, Ci, Water, 120vac [Pumptec]	1
∇	13	9022521	(11082734-	)●	Pump Kit, Ci, Water, 230vac [Pumptec]	1
▲		1264956	(11082734-	)●	Repair Kit, Plunger & Seals [Pumptec]	1
▲		1264957	(11082734-	)●	Repair Kit, Valves & Seals [Pumptec]	1
	14	140015	(00000000-	)	Washer, Lock, Split, 0.31, Ss	4
	15	140027	(00000000-	)	Washer, Flat, 0.35b 0.75d .04, Ss	4
	16	140506	(00000000-	)	Nut, Hex, Std, .31- 18, Ss	3
	17	701143	(00000000-	)	Cord, 18ga /3, 024.0l Blk [Sjto]	1
	18	019686055	(00000000-	)	Spacer, Plstc, 6.5b 15.8d 6.4l, Ny (EMC Model Only)	2
	19	1006692	(00000000-	)	Shield, Motor, Vacuum (EMC Model Only)	1
	20	130031	(00000000-	)	Mount, Motor, 1.25inch	3
	21	02991	(00000000-	)	Screw, Hex, .31- 18 X 0.75, Ss	3
	22	230390	(00000000-	)	Hinge, .19pin .06 2.0w 08.8l, Yel Pl	1
	23	140000	(00000000-	)	Washer, Flat, 0.28b 0.62d .04, Ss	7
	24	140885	(00000000-	)	Screw, Trs, .25- 20 X 0.50, Phl, Ss	7
	25	611069	(00000000-	)	Fitting, Hose, Brb	1
	26	140519	(00000000-	)	Nut, Hex, Lock, #10- 24, Kep, Ss	3
	27	140804	(00000000-	)	Screw, Rnd, Phl, 10- 24 X 1.00, Ss	1
	28	608906	(00000000-	)	Axle, .5d X 18.35l [C- Note]	1
	29	140008	(00000000-	)	Washer, Flat, 0.57b 1.28d .08, Ss	4
	30	103009	(00000000-	)●	Wheel, 12.0d 1.75w, White / Gray [Td]	2
	31	103019	(00000000-	)	Nut, Retainer, 0.50d 0.29l, Ss	2
	32	230746	(00000000-	)	Bracket, Axle, .5d, Offset	2
	33	140016	(00000000-	)	Washer, Lock, Split, 0.25, Ss	12
	34	01697	(00000000-	)	Screw, Hex, .25- 20 X 0.62, Ss	12
	35	103065	(00000000-	)●	Caster, Swivel, 4.0d 1.3w, 4hole	2

∇ ASSEMBLY

▲ INCLUDED IN ASSEMBLY

LOWER HOUSING GROUP - CONTD (S/N 11082734 -)

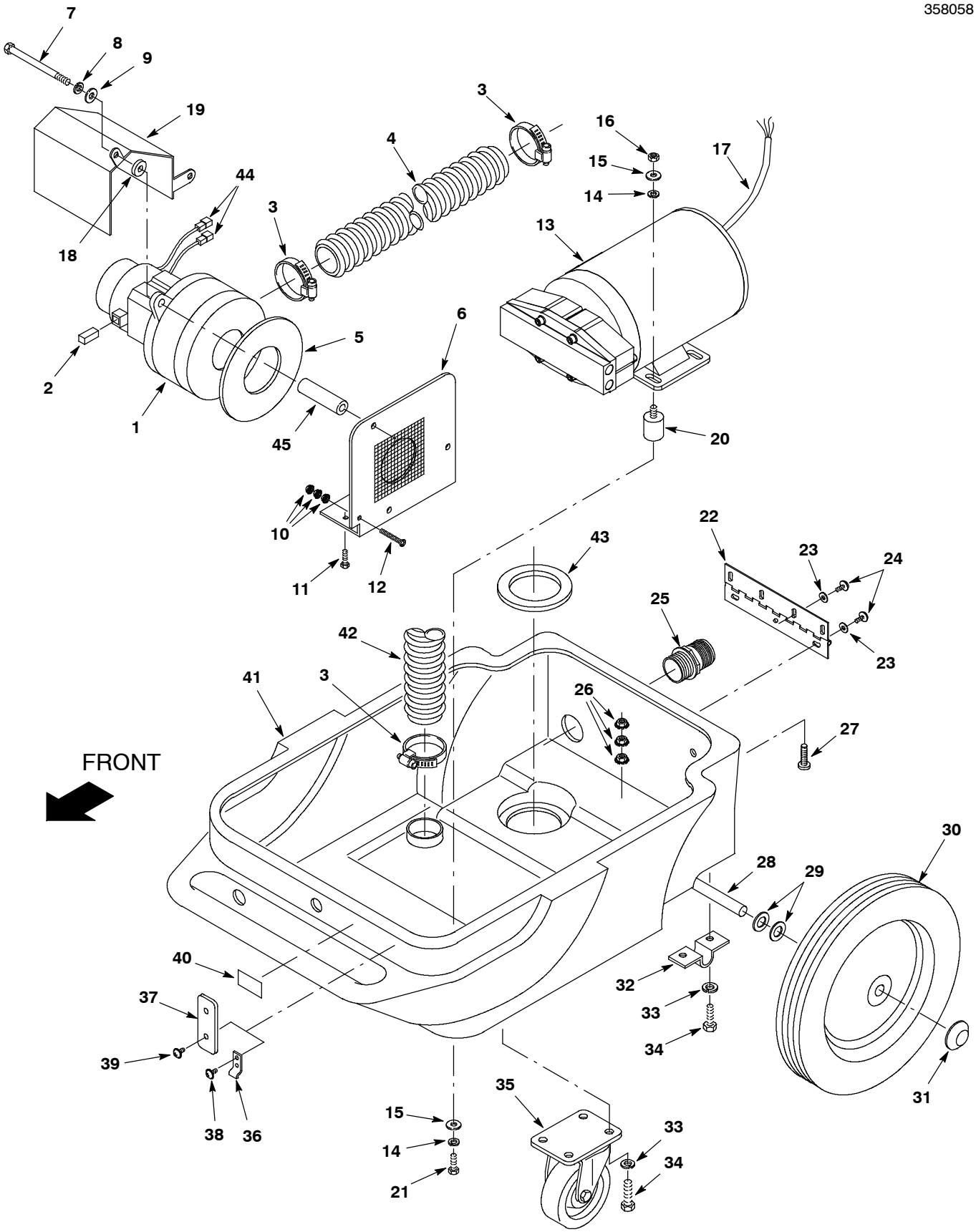

LOWER HOUSING GROUP - CONTD (S/N 11082734 -)

Ref.	Part No.	Serial Number	Description	Qty.
36	49800	(00000000-)	Latch (Standard Models)	2
37	610207	(00000000-)	Strap, Tank (CSA & EMC Models)	2
38	609980	(00000000-)	Screw, Trs, Phl, 08- 32 X 0.38, Sems (Standard Models)	8
39	609980	(00000000-)	Screw, Trs, Phl, 08- 32 X 0.38, Sems (CSA & EMC Models)	4
40	609752	(00000000-)	Label, Chemical	1
41	1033139	(00000000-)	Chassis, Hsngm Rm- Cphg, Afmkt [C- 15]	1
42	160629	(00000000-)●	Hose, Vacuum, 2.00id X 028.0l, Blk	1
43	102567	(00000000-)	Gasket, .50, 03.00id 04.00od, Adh [Epdm]	1
44	130133	(00000000-)	Terminal, Mal, .25 22- 18ga Red, F- Ins	2
45	610144	(00000000-)	Spacer, Fan	3

LOWER HOUSING GROUP (S/N 0000000 - 11082733)

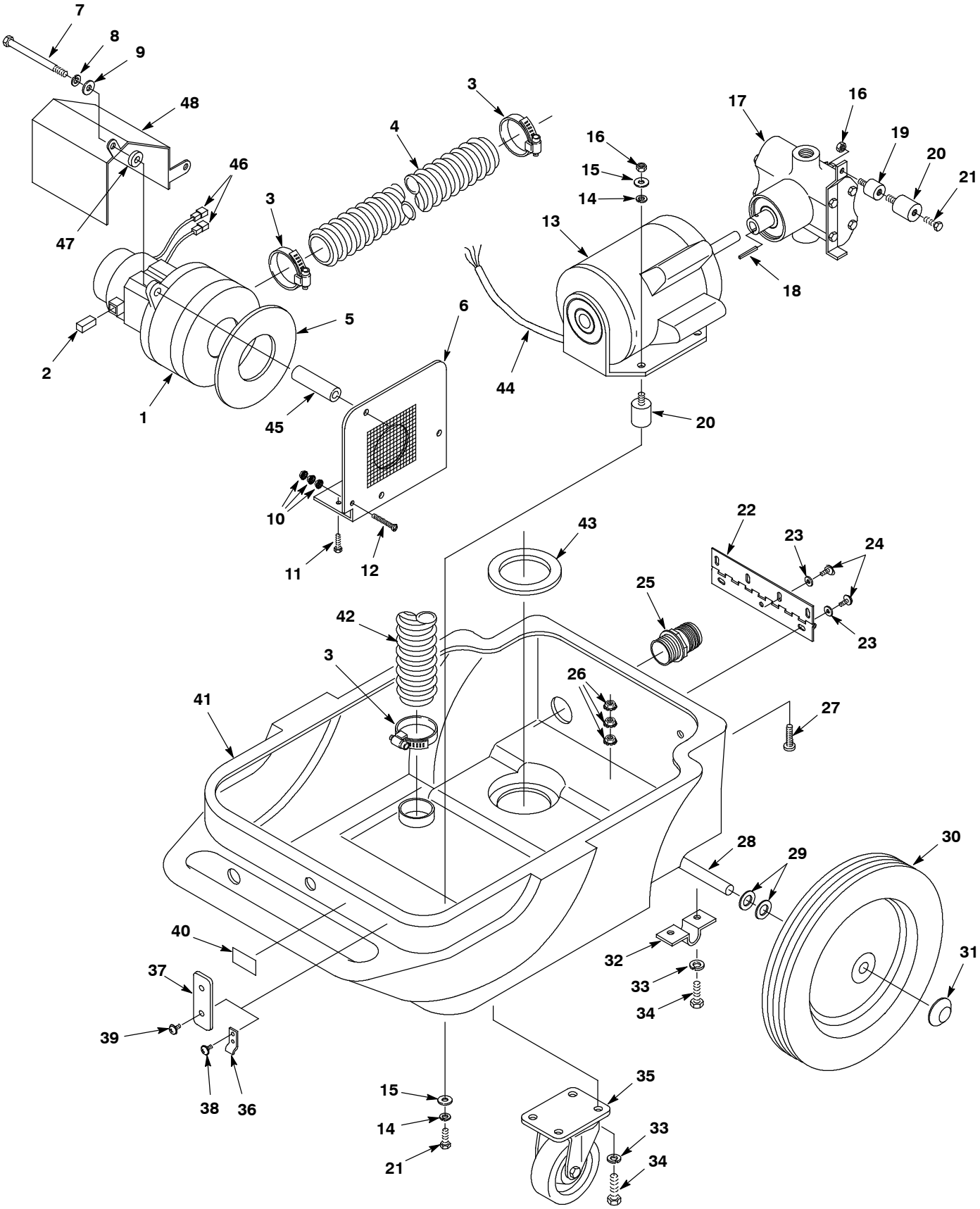

LOWER HOUSING GROUP (S/N 0000000 - 11082733)

	Ref.	Part No.	Serial Number		Description	Qty.
∇	1	605278	(00000000-	)●	Fan, Vacuum, 5.7d, 120vac, 2 Stage (120V)	1
▲	2	190155	(00000000-	)●	Brush, Carbon [130402,18,14, 1pick=1pkg]	1
∇	1	130403	(00000000-	)●	Fan, Vacuum, 5.7d, 240vac, 2 Stage (220V/230V)	1
▲	2	190158	(00000000-	)●	Brush, Carbon [130403, 1pick=1pkg]	1
▲		130487	(00000000-	)●	Housing, Motor, Fan, Vent	1
	3	140308	(00000000-	)	Clamp, Hose, Wormdrive, 1.31- 2.25d, Ss	3
	4	160482	(00000000-	)●	Hose, Vacuum, 2.00id X 013.0l, Blk	1
	5	100038	(00000000-	)●	Gasket, .50, 02.63id 05.75od, Adh [Epdm]	1
	6	609652	(00000000-	)	Bracket, Mtg, Vacuum Motor	1
	7	2998.28	(00000000-	)	Screw, Hex, .25- 20 X 3.50, Pl	3
	8	140016	(00000000-	)	Washer, Lock, Split, 0.25, Ss	5
	9	140000	(00000000-	)	Washer, Flat, 0.28b 0.62d .04, Ss	5
	10	140519	(00000000-	)	Nut, Hex, Lock, #10- 24, Kep, Ss	3
	11	24672	(00000000-	)	Screw, Hex, .25- 20 X 0.75, Ss	2
	12	140804	(00000000-	)	Screw, Rnd, Phl, 10- 24 X 1.00, Ss	1
∇	13	130450	(00000000- 11082733	)●	Motor, 0.33hp, Pump Drive (Replaced By Kit 9022458)	1
▲		1054125	(00000000- 11082733	)●	Capacitor, Start [For 130450]	1
▲		1054126	(00000000- 11082733	)●	Capacitor, Run [For 130450]	1
	13	130453	(00000000- 11082733	)●	Motor, Ele, 230vac, Pump Drive (Replaced By Kit 9022458)	1
	14	140015	(00000000-	)	Washer, Lock, Split, 0.31, Ss	4
	15	140027	(00000000-	)	Washer, Flat, 0.35b 0.75d .04, Ss	4
	16	140506	(00000000-	)	Nut, Hex, Std, .31- 18, Ss	3
∇	17	9000579	(00000000- 11082733	)●	Pump Kit [Twin- Piston, 180100] (Replaced By Kit 9022458)	1
▲	18	190310	(00000000- 11082733	)●	Pump, Shaft Key [5300 Series]	1
	19	130030	(00000000- 11082733	)	Mount, Motor, 0.75inch	1
	20	130031	(00000000-	)	Mount, Motor, 1.25inch (120V)	3
	20	130030	(00000000- 11082733	)	Mount, Motor, 0.75inch (220V/230V)	3
	21	02991	(00000000-	)	Screw, Hex, .31- 18 X 0.75, Ss	3
	22	230390	(00000000-	)	Hinge, .19pin .06 2.0w 08.8l, Yel Pl	1
	23	140000	(00000000-	)	Washer, Flat, 0.28b 0.62d .04, Ss	7
	24	140885	(00000000-	)	Screw, Trs, .25- 20 X 0.50, Phl, Ss	7
	25	611069	(00000000-	)	Fitting, Hose, Brb	1
	26	140519	(00000000-	)	Nut, Hex, Lock, #10- 24, Kep, Ss	3
	27	140804	(00000000-	)	Screw, Rnd, Phl, 10- 24 X 1.00, Ss	1
	28	608906	(00000000-	)	Axle, .5d X 18.35l [C- Note]	1
	29	140008	(00000000-	)	Washer, Flat, 0.57b 1.28d .08, Ss	4
	30	103009	(00000000-	)●	Wheel, 12.0d 1.75w, White / Gray [Td]	2
	31	103019	(00000000-	)	Nut, Retainer, 0.50d 0.29l, Ss	2
	32	230746	(00000000-	)	Bracket, Axle, .5d, Offset	2
	33	140016	(00000000-	)	Washer, Lock, Split, 0.25, Ss	12
	34	01697	(00000000-	)	Screw, Hex, .25- 20 X 0.62, Ss	12
	35	103065	(00000000-	)●	Caster, Swivel, 4.0d 1.3w, 4hole	2

∇ ASSEMBLY

▲ INCLUDED IN ASSEMBLY

LOWER HOUSING GROUP - CONTD (S/N 0000000 - 11082733)

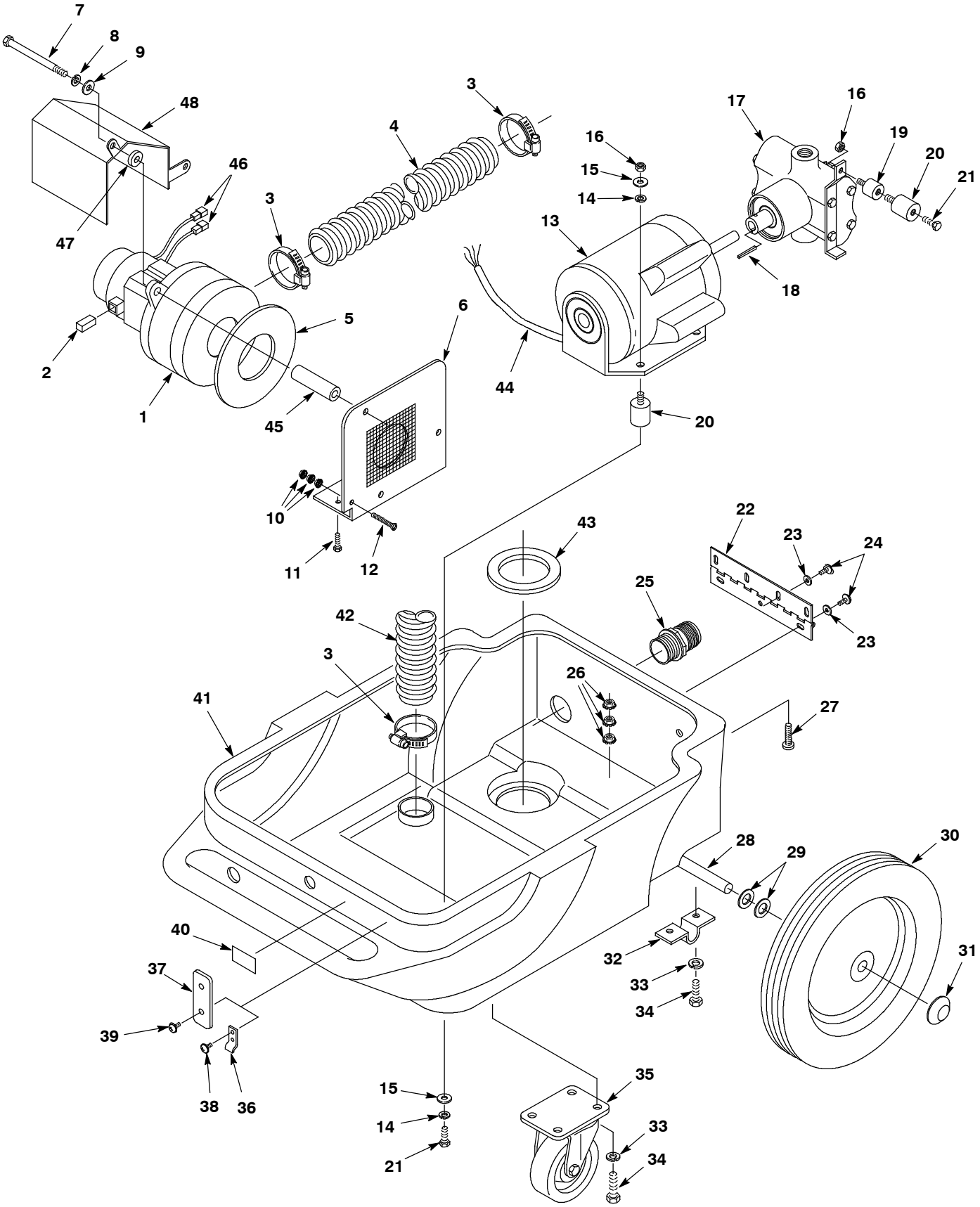

LOWER HOUSING GROUP - CONTD (S/N 0000000 - 11082733)

Ref.	Part No.	Serial Number	Description	Qty.
36	49800	(00000000-)	Latch (Standard Models)	2
37	610207	(00000000-)	Strap, Tank (CSA & EMC Models)	2
38	609980	(00000000-)	Screw, Trs, Phl, 08- 32 X 0.38, Sems (Standard Models)	8
39	609980	(00000000-)	Screw, Trs, Phl, 08- 32 X 0.38, Sems (CSA & EMC Models)	4
40	609752	(00000000-)	Label, Chemical	1
41	1033139	(00000000-)	Chassis, Hsngm Rm- Cphg, Afmkt [C- 15]	1
42	160629	(00000000-)●	Hose, Vacuum, 2.00id X 028.0l, Blk	1
43	102567	(00000000-)	Gasket, .50, 03.00id 04.00od, Adh [Epdm]	1
44	701143	(00000000-)	Cord, 18ga /3, 024.0l Blk [Sjto]	1
45	610144	(00000000-)	Spacer, Fan	3
46	130133	(00000000-)	Terminal, Mal, .25 22- 18ga Red, F- Ins	2
47	019686055	(00000000-)	Spacer, Plstc, 6.5b 15.8d 6.4l, Ny (EMC Model Only)	2
48	1006692	(00000000-)	Shield, Motor, Vacuum (EMC Model Only)	1

HANDLE GROUP

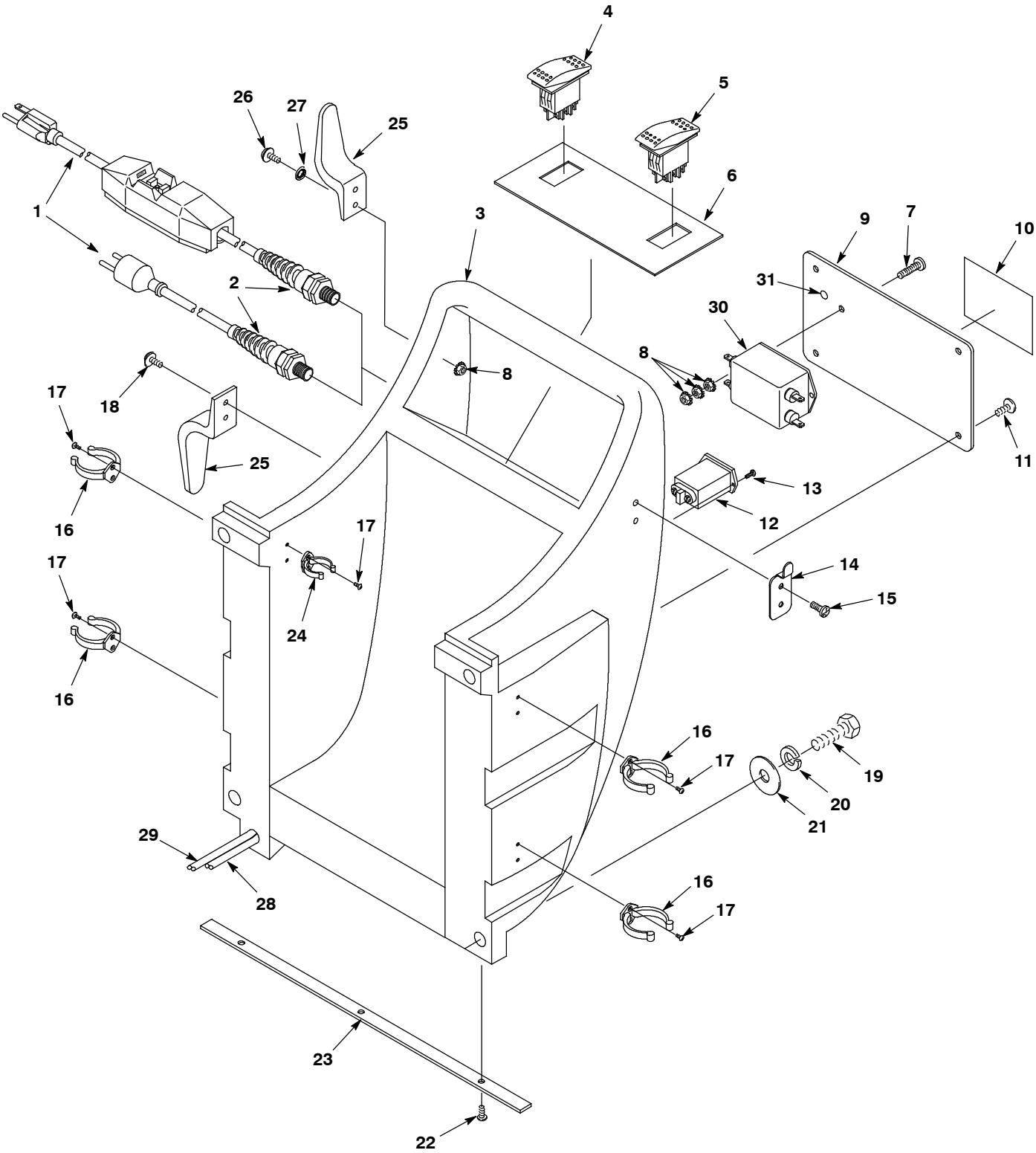

HANDLE GROUP

	Ref.	Part No.	Serial Number		Description	Qty.
	1	609754	(00000000-	)●	Cord, Power, 14/3, 26ft Yel[W/Gfci,Sjtw] (120V)	1
	1	600324	(00000000-	)●	Cord, Power, 1.5mm2/3 Blk [15meter Euro] (220V)	1
	1	1038777	(00000000-	)●	Cord, Power, 1.0mm /3 Blk [15meter, Aus] (230V EMC)	1
	2	130166	(00000000-	)●	Grip, Cord, Strainrelief Pg- 11 W/Nut Bk	1
	3	9007658	(00000000-	)	Handle, Rm- Blk, Afmkt [ASC- 15]	1
	4	608605	(00000000-	)●	Switch, Rocker, Dpst	1
	5	609657	(00000000-	)●	Switch, Rocker, On / Off / On	1
	6	609748	(00000000-	)	Label, Dash [Asc- 1500]	1
	7	140900	(00000000-	)	Screw, Trs, Phl, 10- 24 X 0.75, Ss	1
	8	140519	(00000000-	)	Nut, Hex, Lock, #10- 24, Kep, Ss	5
∇	9	614121	(00000000-	)	Plate Assy, W/ Label	1
▲	10	1026384	(00000000-	)	Label, Warning [Expl,Fire,Shk En/Fr/Es]	1
	11	140197	(00000000-	)	Screw, Trs, Phl, 10- 24 X 0.38, Sems, Ss	4
	12	1068904	(00000000-	)	Gauge, Hourmeter, 05- 277vdc/Vac, 2- Hole	1
	12	604745	(00000000-	)	Gauge, Hourmeter, 120/230vac, Lcd, Rt	1
	13	140825	(00000000-	)	Screw, Pan, Phl, 06 X 0.50, Fmg/Ab, Blk	2
	14	1006890	(00000000-	)	Clip, Hanger, Hose, .16d, 2hole	1
	15	140825	(00000000-	)	Screw, Pan, Phl, 06 X 0.50, Fmg/Ab, Blk	2
	16	610733	(00000000-	)	Clip, Grip, Hose, 1.38- 1.62, Blk Nyl	4
	17	140825	(00000000-	)	Screw, Pan, Phl, 06 X 0.50, Fmg/Ab, Blk	10
	18	140197	(00000000-	)	Screw, Trs, Phl, 10- 24 X 0.38, Sems, Ss	2
	19	140231	(00000000-	)	Screw, Hex, .38- 16 X 1.50, Ss	4
	20	140017	(00000000-	)	Washer, Lock, Split, 0.38, Ss	4
	21	140028	(00000000-	)	Washer, Flat, 0.42b 1.00d .05, Ss	4
	22	140825	(00000000-	)	Screw, Pan, Phl, 06 X 0.50, Fmg/Ab, Blk	3
	23	609753	(00000000-	)	Plate, Stop, Wand	1
	24	610732	(00000000-	)	Clip, Wand [Telescoping]	1
	25	230920.BK	(00000000-	)	Hook, Cord, Blk [Boss]	2
	26	140197	(00000000-	)	Screw, Trs, Phl, 10- 24 X 0.38, Sems, Ss	2
	27	140031	(00000000-	)	Washer, Lock, Ext, 10, Pl	2
	28	701138	(00000000-	)	Cord, 14ga /4, 046.0l Blk [Sjto]	1
	29	701139	(00000000-	)	Cord, 14ga /3, 063.0l Blk [Sjto]	1
	30	613099	(00000000-	)	Filter [Corcom 10vv1] (EMC Model Only)	1
	31	578859	(00000000-	)	Label, Warning [Ground, Textless] (EMC Model Only)	1

∇ ASSEMBLY

▲ INCLUDED IN ASSEMBLY

PLUMBING GROUP (S/N 11082734 -)

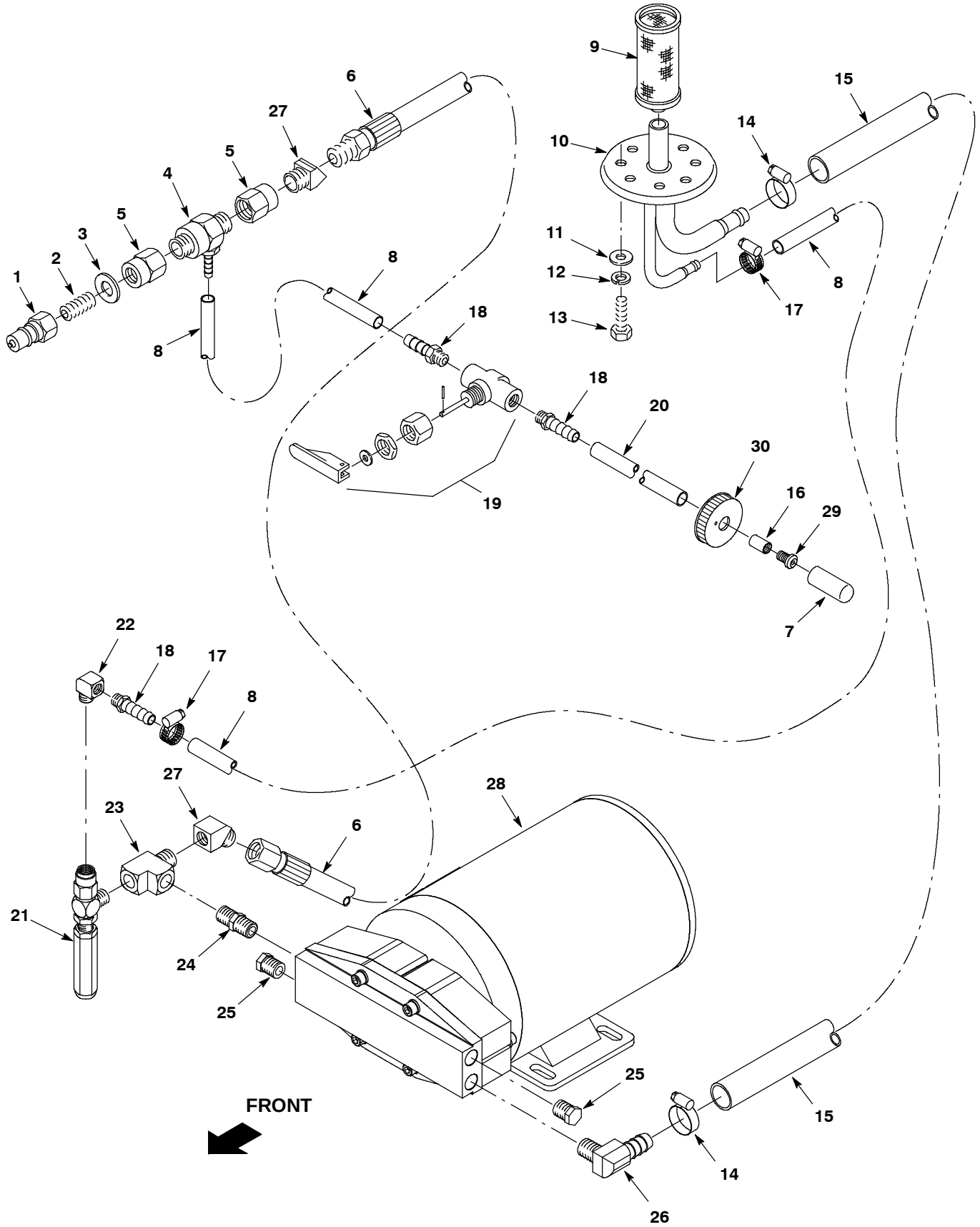

PLUMBING GROUP (S/N 11082734 -)

	Ref.	Part No.	Serial Number		Description	Qty.
	1	150933	(00000000-	)	Fitting, Brs, Qdc, Pm04 [Ser60]	1
	2	150615	(11082734-	)	Fitting, Brs, Str, Pm04, Close, T	1
	3	140058	(00000000-	)	Washer, Flat, 0.54b 0.88d .06, Ss [Wand]	1
	4	609660	(00000000-	)	Injector	1
	5	150110	(00000000-	)	Fitting, Brs, Str, Pf04 [Ujet Adapter]	2
	6	160140	(00000000-	)	Hose Assy, Pm04/Pf04, 36.0l [Pulse]	1
	7	609988	(00000000-	)●	Cap, Vyl, 0.43d, 1.00l, Red	1
	8	606364	(00000000-	)	Hose, Pvc, Brd, 0.25id 0.50od 60.0l,Gray	1
	9	603186	(00000000-	)●	Filter, Screen, 060mesh, Ss, Pf04	1
	10	609703	(00000000-	)	Plate Assy, Bladder [Asc]	1
	11	140000	(00000000-	)	Washer, Flat, 0.28b 0.62d .04, Ss	4
	12	140016	(00000000-	)	Washer, Lock, Split, 0.25, Ss	4
	13	24672	(00000000-	)	Screw, Hex, .25- 20 X 0.75, Ss	4
	14	54333	(00000000-	)	Clamp, Hose, Wormdrive, 0.31- 0.88d, .31w	2
	15	609923	(00000000-	)	Hose, Pvc, Wir, 0.50id 0.75od 035.0l,Clr	1
	16	609976	(00000000-	)●	Spacer, 0.31d X 0.50l, 8- 32 Thrd	1
	17	43844	(00000000-	)	Clamp, Hose, Wormdrive, 0.25- 0.62d, .31w	2
	18	150525	(00000000-	)	Fitting, Brs, Str, Bm04/Pm02	3
	19	210014	(00000000-	)	Valve, Water, Toggle, Pf02, W/ Nut	1
	20	609922	(00000000-	)	Tube, 0.25id 0.38od 76.0l, Blu	1
	21	210211	(00000000-	)	Valve, Water, Relief, Press, 050- 450psi	1
	22	150407	(00000000-	)	Fitting, Brs, E90, Pf02/Pm02 [Street]	1
	23	150709	(00000000-	)	Fitting, Brs, Tee, Pm04/Pf04/Pf04, Run	1
	24	150606	(11082734-	)	Fitting, Brs, Str, Pm04/Pm04 X1.38l[Nip]	1
	25	150206	(11082734-	)	Fitting, Brs, Str, Pm04, Hex Plug, T	2
	26	1010836	(11082734-	)	Fitting, Brs, E90, Bm08/Pm04	1
	27	150403	(11082734-	)	Fitting, Brs, E45, Pf04/Pm04 [Taped]	2
∇	28	9022520	(11082734-	)●	Pump Kit, Ci, Water, 120vac [Pumptec]	1
∇	28	9022521	(11082734-	)●	Pump Kit, Ci, Water, 230vac [Pumptec]	1
▲		1264956	(11082734-	)●	Repair Kit, Plunger & Seals [Pumptec]	1
▲		1264957	(11082734-	)●	Repair Kit, Valves & Seals [Pumptec]	1
	29	609757	(00000000-	)●	Metering Kit, Orifice (3 Tips Included)	1
	30	231062	(00000000-	)●	Cap, 1gal	1

∇ ASSEMBLY

▲ INCLUDED IN ASSEMBLY

PLUMBING GROUP (S/N 0000000 - 11082733)

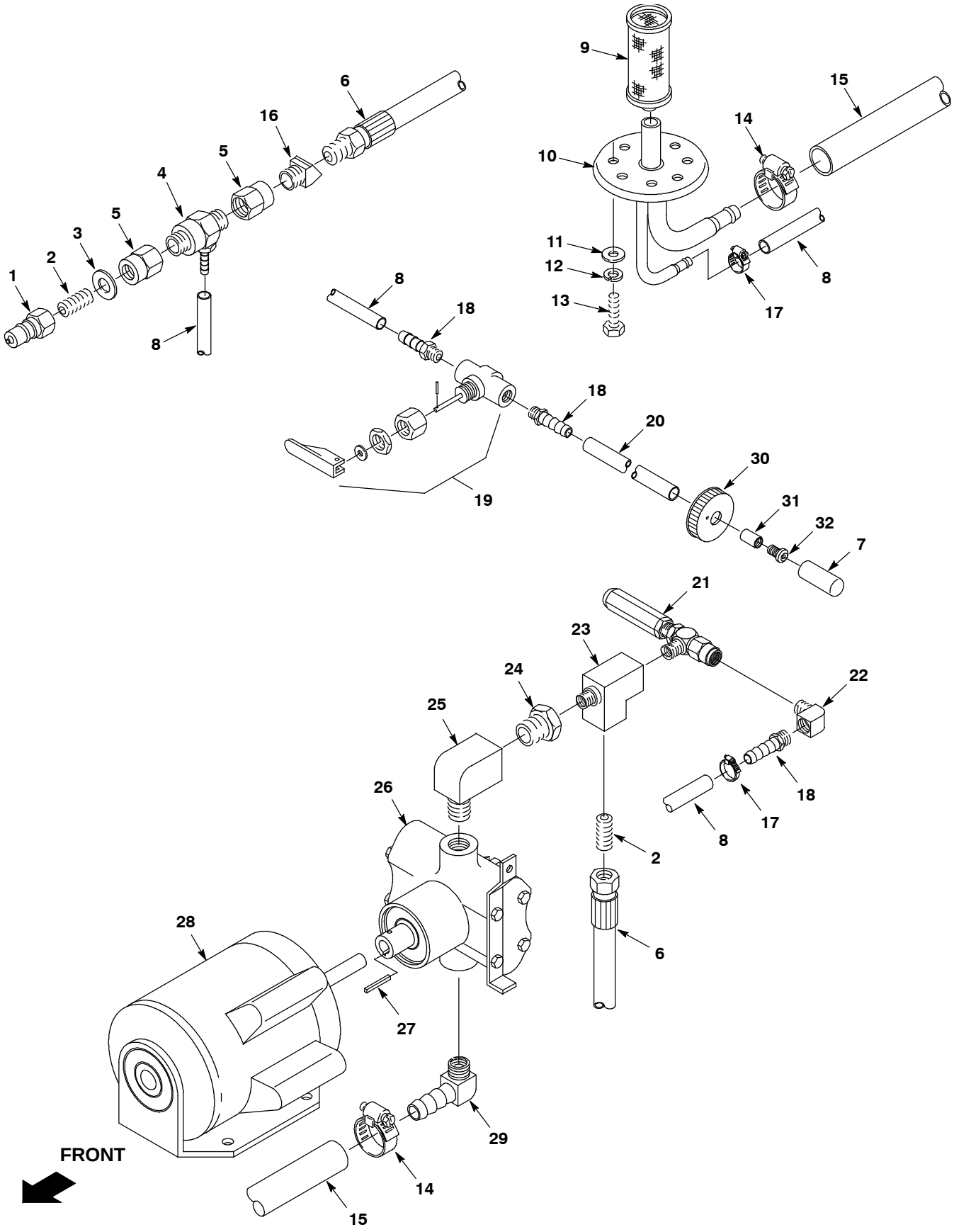

PLUMBING GROUP (S/N 0000000 - 11082733)

	Ref.	Part No.	Serial Number		Description	Qty.
	1	150933	(00000000-	)	Fitting, Brs, Qdc, Pm04 [Ser60]	1
	2	150615	(00000000- 11082733	)	Fitting, Brs, Str, Pm04, Close, T	2
	3	140058	(00000000-	)	Washer, Flat, 0.54b 0.88d .06, Ss [Wand]	1
	4	609660	(00000000-	)	Injector	1
	5	150110	(00000000-	)	Fitting, Brs, Str, Pf04 [Ujet Adapter]	2
	6	160140	(00000000-	)	Hose Assy, Pm04/Pf04, 36.0l [Pulse]	1
	7	609988	(00000000-	)●	Cap, Vyl, 0.43d, 1.00l, Red	1
	8	606364	(00000000-	)	Hose, Pvc, Brd, 0.25id 0.50od 60.0l,Gray	1
	9	603186	(00000000-	)●	Filter, Screen, 060mesh, Ss, Pf04	1
	10	609703	(00000000-	)	Plate Assy, Bladder [Asc]	1
	11	140000	(00000000-	)	Washer, Flat, 0.28b 0.62d .04, Ss	4
	12	140016	(00000000-	)	Washer, Lock, Split, 0.25, Ss	4
	13	24672	(00000000-	)	Screw, Hex, .25- 20 X 0.75, Ss	4
	14	54333	(00000000-	)	Clamp, Hose, Wormdrive, 0.31- 0.88d, .31w	2
	15	609923	(00000000-	)	Hose, Pvc, Wir, 0.50id 0.75od 035.0l,Clr	1
	16	150403	(00000000-	)	Fitting, Brs, E45, Pf04/Pm04 [Taped]	1
	17	43844	(00000000-	)	Clamp, Hose, Wormdrive, 0.25- 0.62d, .31w	2
	18	150525	(00000000-	)	Fitting, Brs, Str, Bm04/Pm02	3
	19	210014	(00000000-	)	Valve, Water, Toggle, Pf02, W/ Nut	1
	20	609922	(00000000-	)	Tube, 0.25id 0.38od 76.0l, Blu	1
	21	210211	(00000000-	)	Valve, Water, Relief, Press, 050- 450psi	1
	22	150407	(00000000-	)	Fitting, Brs, E90, Pf02/Pm02 [Street]	1
	23	150709	(00000000-	)	Fitting, Brs, Tee, Pm04/Pf04/Pf04, Run	1
	24	1220546	(00000000- 11082733	)	Fitting, Brs, Str, Pm08/Pf04	1
	25	150405	(00000000- 11082733	)	Fitting, Brs, E90, Pf08/Pm08 [Street]	1
∇	26	9000579	(00000000- 11082733	)●	Pump Kit [Twin- Piston, 180100] (See Breakdown) (Replaced By Kit 9022458)	1
▲	27	190310	(00000000- 11082733	)●	Pump, Shaft Key [5300 Series]	1
	28	130450	(00000000- 11082733	)●	Motor, 0.33hp, Pump Drive (120V) (Replaced By Kit 9022458)	1
	28	130453	(00000000- 11082733	)●	Motor, Ele, 230vac, Pump Drive (220V/230V) (Replaced By Kit 9022458)	1
	29	150431	(00000000- 11082733	)	Fitting, Brs, E90, Bm08/Pm08	1
	30	231062	(00000000-	)●	Cap, 1gal	1
	31	609976	(00000000-	)●	Spacer, 0.31d X 0.50l, 8- 32 Thrd	1
	32	609757	(00000000-	)●	Metering Kit, Orifice (3 Tips Included)	1

∇ ASSEMBLY

▲ INCLUDED IN ASSEMBLY

SOLUTION PUMP GROUP (S/N 0000000 - 11082733)

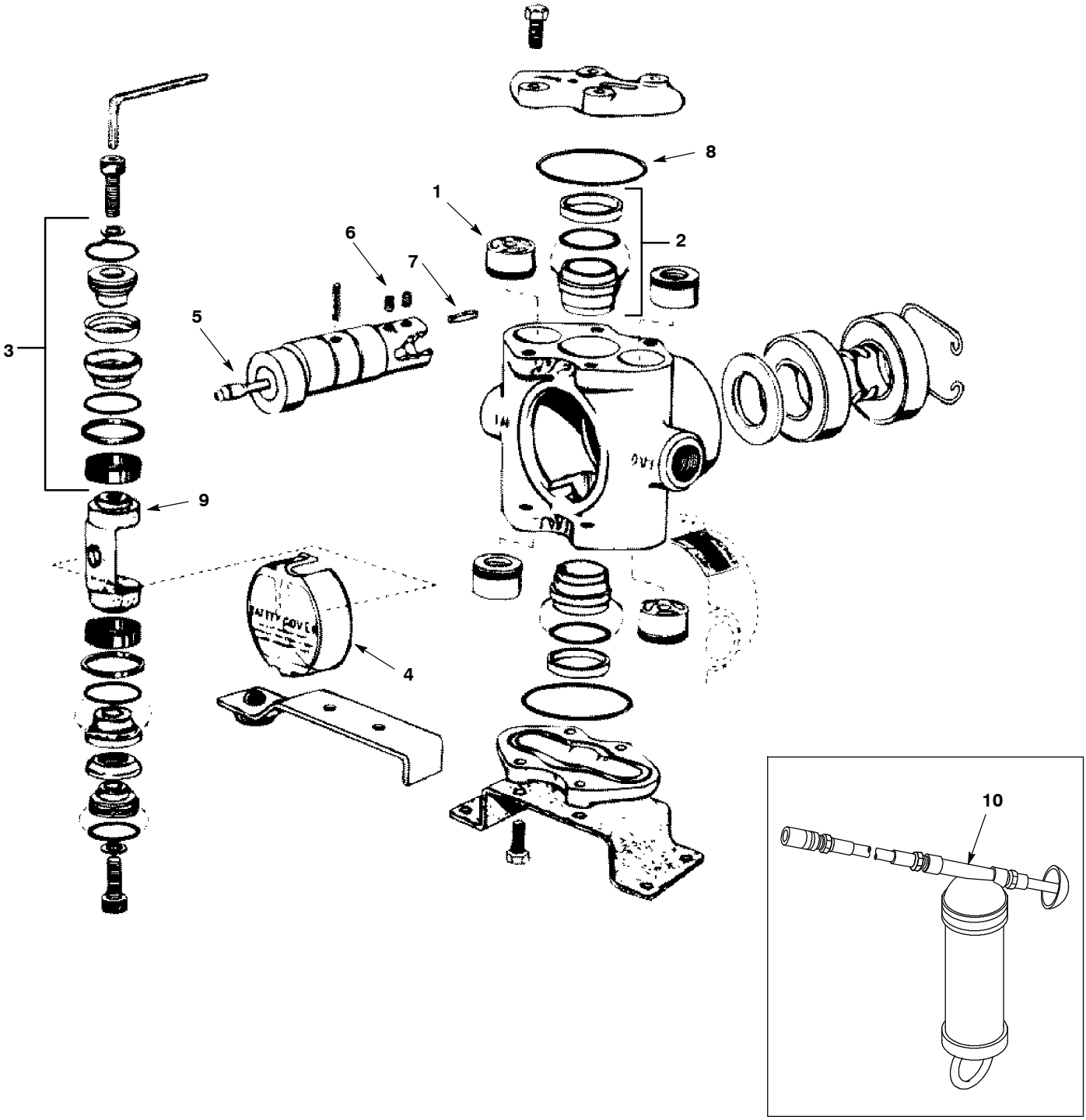

SOLUTION PUMP GROUP (S/N 0000000 - 11082733)

	Ref.	Part No.	Serial Number		Description	Qty.
∇		9000579	(00000000- 11082733	)	Pump Kit [Twin- Piston, 180100]	1
▲	1	190301	(00000000- 11082733	)●	Valve Kit [5300 Series]	1
▲	2	190302	(00000000- 11082733	)●	Sleeve Kit, Cyl [5300]	1
▲	3	190300	(00000000- 11082733	)●	Cup Kit [5300 Series]	1
▲	4	190307	(00000000- 11082733	)	Pump, Safety Cover [5300 Ser]	1
▲	5	190305	(00000000- 11082733	)	Fitting, Grease [Twin Piston]	1
▲	6	190309	(00000000- 11082733	)	Pump, Set Screw [5300 Series]	2
▲	7	190310	(00000000- 11082733	)●	Pump, Shaft Key [5300 Series]	1
▲	8	190303	(00000000- 11082733	)●	Vr, Seal, Org, Cyl Head [1 Piece]	1
▲	9	190304	(00000000- 11082733	)	Vr, Rod, Connecting [Twin Piston]	1
	10	190022	(00000000- 11082733	)	Tool, Gun, Grease [Dv, Dva, Cyclo]	1
	N/S	190316	(00000000- 11082733	)●	Puller, Valve Spring Retainer	1
	N/S	190317	(00000000- 11082733	)●	Puller, Valve Poppet Seat	1

∇ ASSEMBLY

▲ INCLUDED IN ASSEMBLY

WAND/HOSE TOOL ACCESSORY KIT

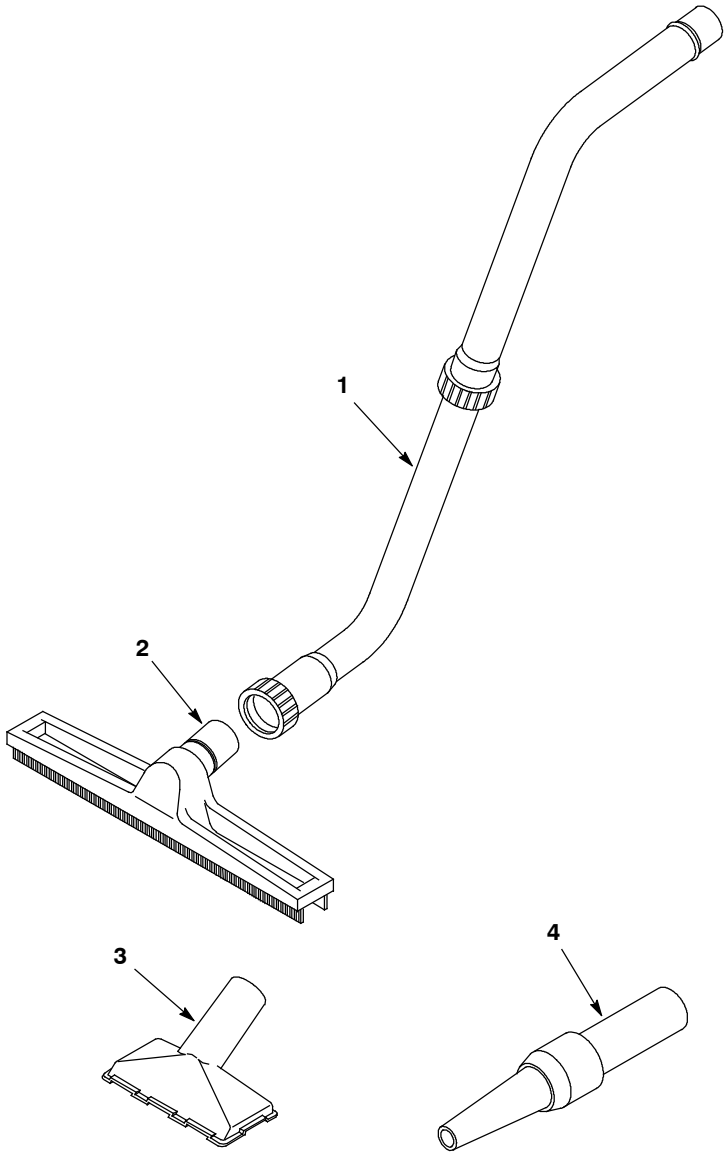

	Ref.	Part No.	Serial Number		Description	Qty.
∇		610140	(00000000-	)	Accssry Kit, Wand & Tool [Asc]	1
▲	1	1010457	(00000000-	)●	Wand, Dbl Bend [Telescopic]	1
▲∇	2	609648	(00000000-	)●	Squeegee, 14.0 [F/ Asc &750 Quick Clean]	1
▲▲		612869	(00000000-	)●	Blade, Sqge, 1pc, F/609648	2
▲▲		1022670	(00000000-	)●	Wheel, Rlr [For 609648 Sqge]	2
▲▲		1022671	(00000000-	)●	Housing, Sqge, Holder, Wheel, F/609648	1
▲	3	609645	(00000000-	)●	Tool, Utility, 5.0inch [Gulper]	1
▲	4	609644	(00000000-	)●	Nozzle, Blower, 1.5inch	1

∇ ASSEMBLY

▲ INCLUDED IN ASSEMBLY

TELESCOPING BRUSH

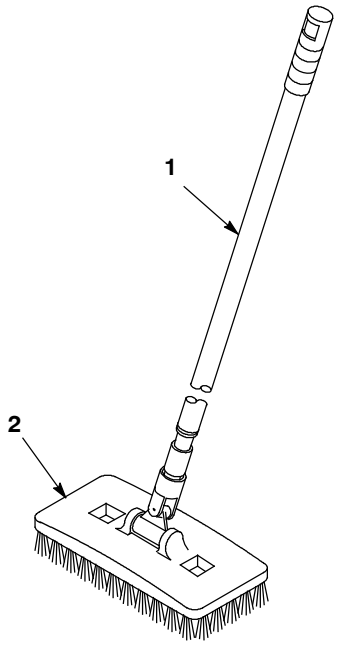

	Ref.	Part No.	Serial Number		Description	Qty.
	1	610731	(00000000-	)●	Handle, Lrg [Telescoping]	1
	2	609650	(00000000-	)●	Brush, Scb, 09l, Pyp / Abr	1

VACUUM AND BLOWER HOSES

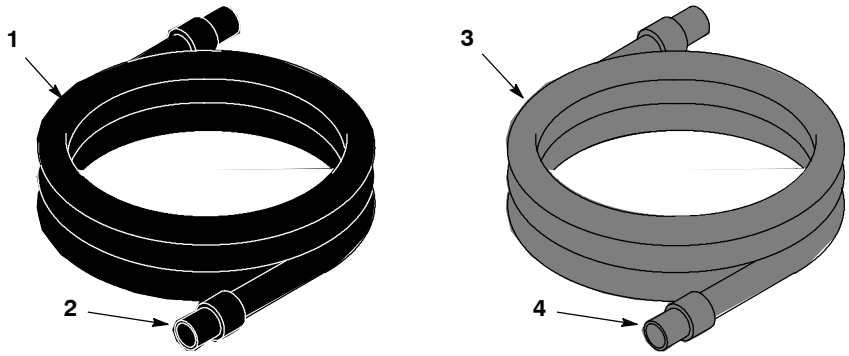

	Ref.	Part No.	Serial Number		Description	Qty.
∇	1	610683	(00000000-	)●	Hose, Vacuum, 1.50id X 25ft, 2cuff, Blk	1
▲	2	160486	(00000000-	)●	Cuff, 1.5d Hose, 1.5id/1.8od 3.5l Blk	2
∇	3	1010410	(00000000-	)●	Hose, Vacuum, 1.25id X 072.0l,2cuff,Gray	1
▲	4	1010458	(00000000-	)●	Cuff, 1.5od X 1.25id Thd X 3.7l, Gray	2

∇ ASSEMBLY

▲ INCLUDED IN ASSEMBLY

SPRAY GUN AND SOLUTION HOSE

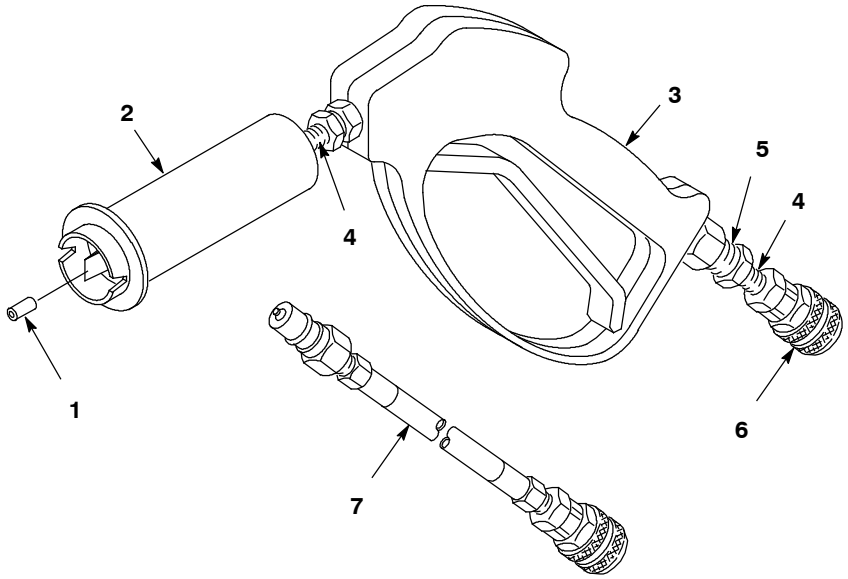

	Ref.	Part No.	Serial Number		Description	Qty.
∇		610845	(00000000-	)●	Gun Kit, Spray, W/ 25ft Hose & Ftg	1
▲∇		610791	(00000000-	)●	Gun Kit, Spray, Complt [Asc]	1
▲▲	1	610141	(00000000-	)	Nozzle, Spray, Tip	1
▲▲	2	609658	(00000000-	)●	Nozzle, Spray [Hi/Lo]	1
▲▲	3	609661	(00000000-	)●	Gun, Spray	1
▲▲	4	150615	(00000000-	)	Fitting, Brs, Str, Pm04, Close, T	2
▲▲	5	150006	(00000000-	)	Fitting, Brs, Str, Pf04/Pm06, Bshg	1
▲▲	6	150913	(00000000-	)	Fitting, Brs, Qdc, Pf04 [Ser60]	1
▲	7	610792	(00000000-	)●	Hose Assy, .25id X 25ft, Blk [Hp, Ser60]	1
	7	610793	(00000000-	)	Hose Assy, .25id X 15ft, Blk [Lp, Ser60]	1

∇ ASSEMBLY
▲ INCLUDED IN ASSEMBLY

GLASS SQUEEGEE

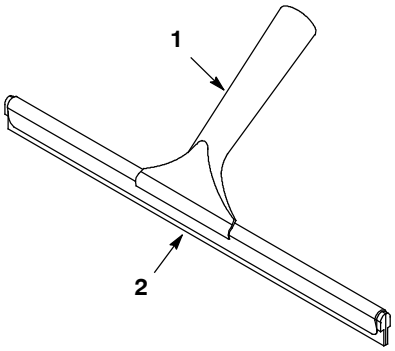

	Ref.	Part No.	Serial Number		Description	Qty.
∇	1	609641	(00000000-	)●	Squeegee Assy, 300mm /12.0, Hand, 1blade	1
▲	2	610918	(00000000-	)●	Blade, Sqge, 012.0l, F/609641, Replmt	1

∇ ASSEMBLY
▲ INCLUDED IN ASSEMBLY

WIRING DIAGRAM, 120V

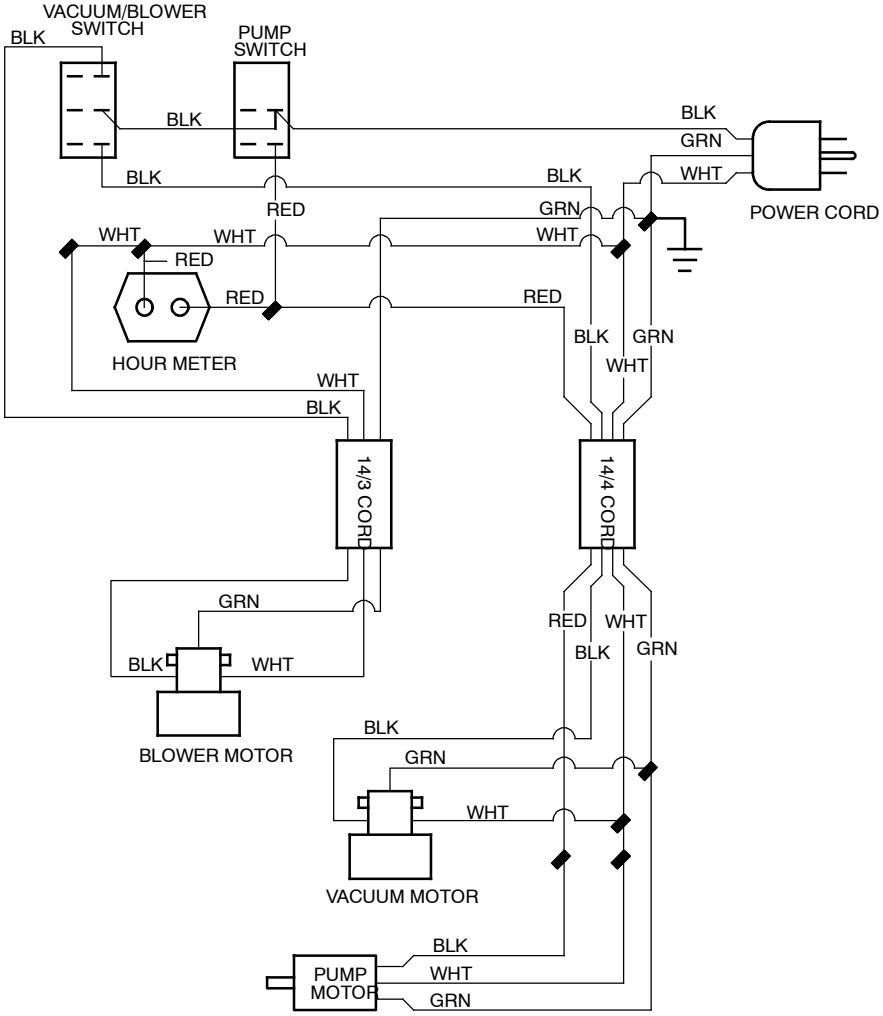

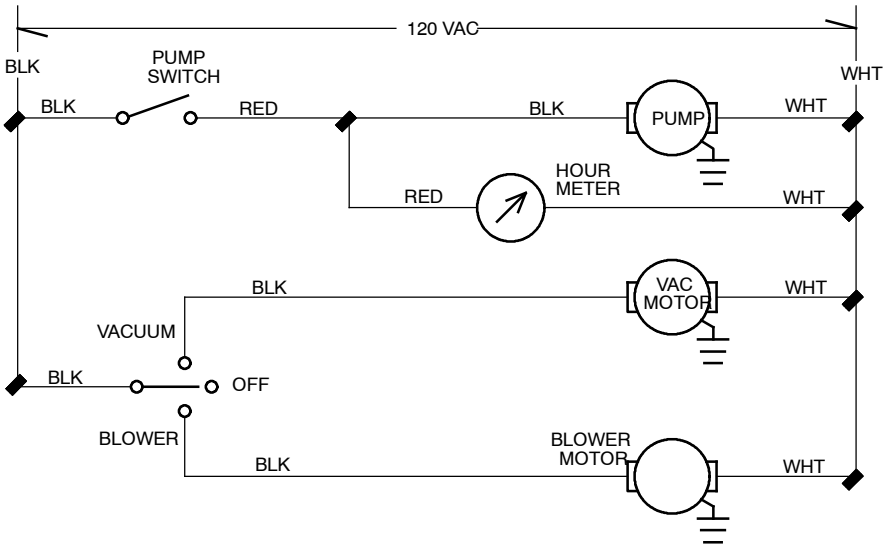

WIRING DIAGRAM, 220V/230V

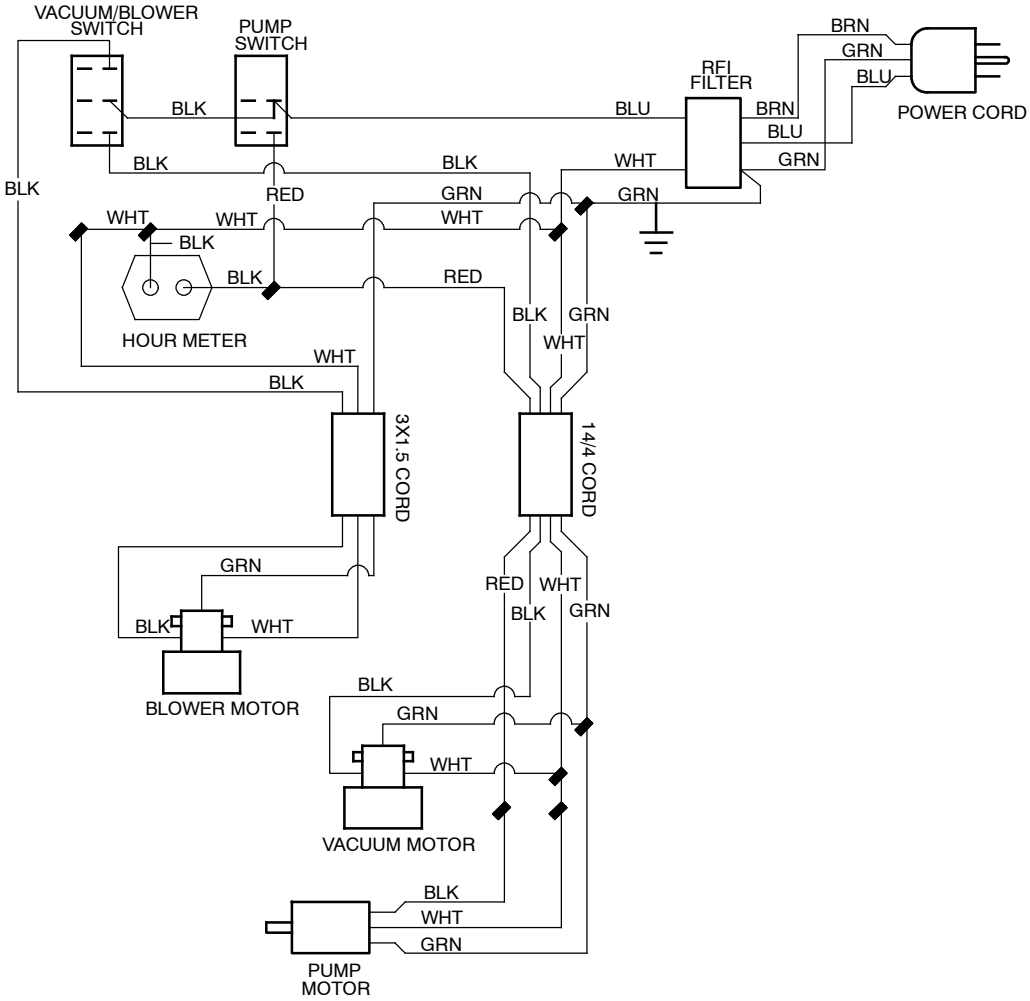

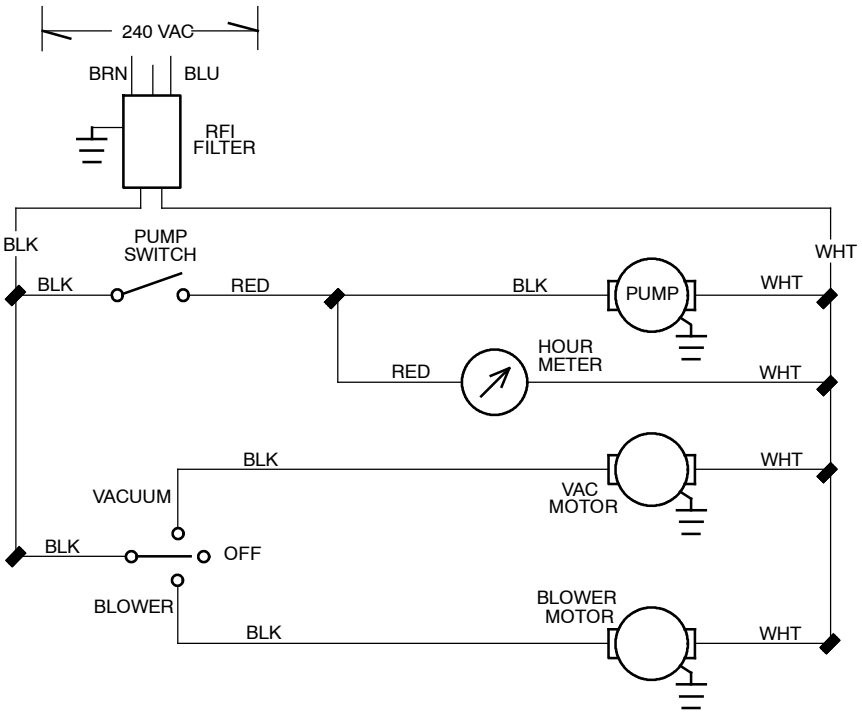

SOLUTION TANK FILL HOSE

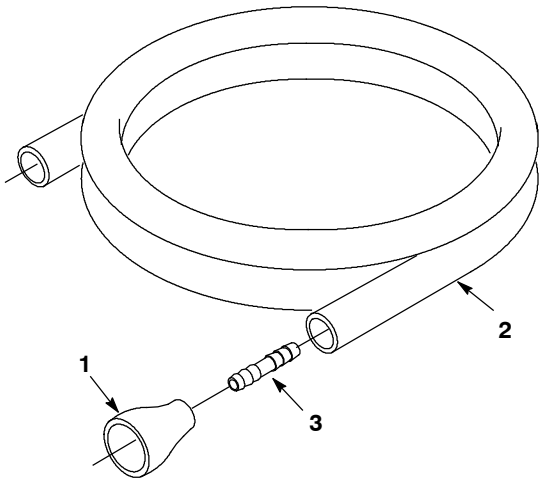

	Ref.	Part No.	Serial Number		Description	Qty.
∇		609983	(00000000-	)●	Hose Assy, Fill, 0.50id X 48l [Faucet] (Optional)	1
▲	1	609984	(00000000-	)●	Fitting, Adapter, 0.29id, Rbr [Faucet]	1
▲	2	14894.48	(00000000-	)	Hose, Pvc, Clr, 0.50id 0.75od 048.0l	1
▲	3	606674	(00000000-	)●	Fitting, Plstc, Union, Bm08/Bm08, Nyl	1

∇ ASSEMBLY

▲ INCLUDED IN ASSEMBLY

FLOOR TOOL, HIGH PRESSURE 13 in (330 mm)

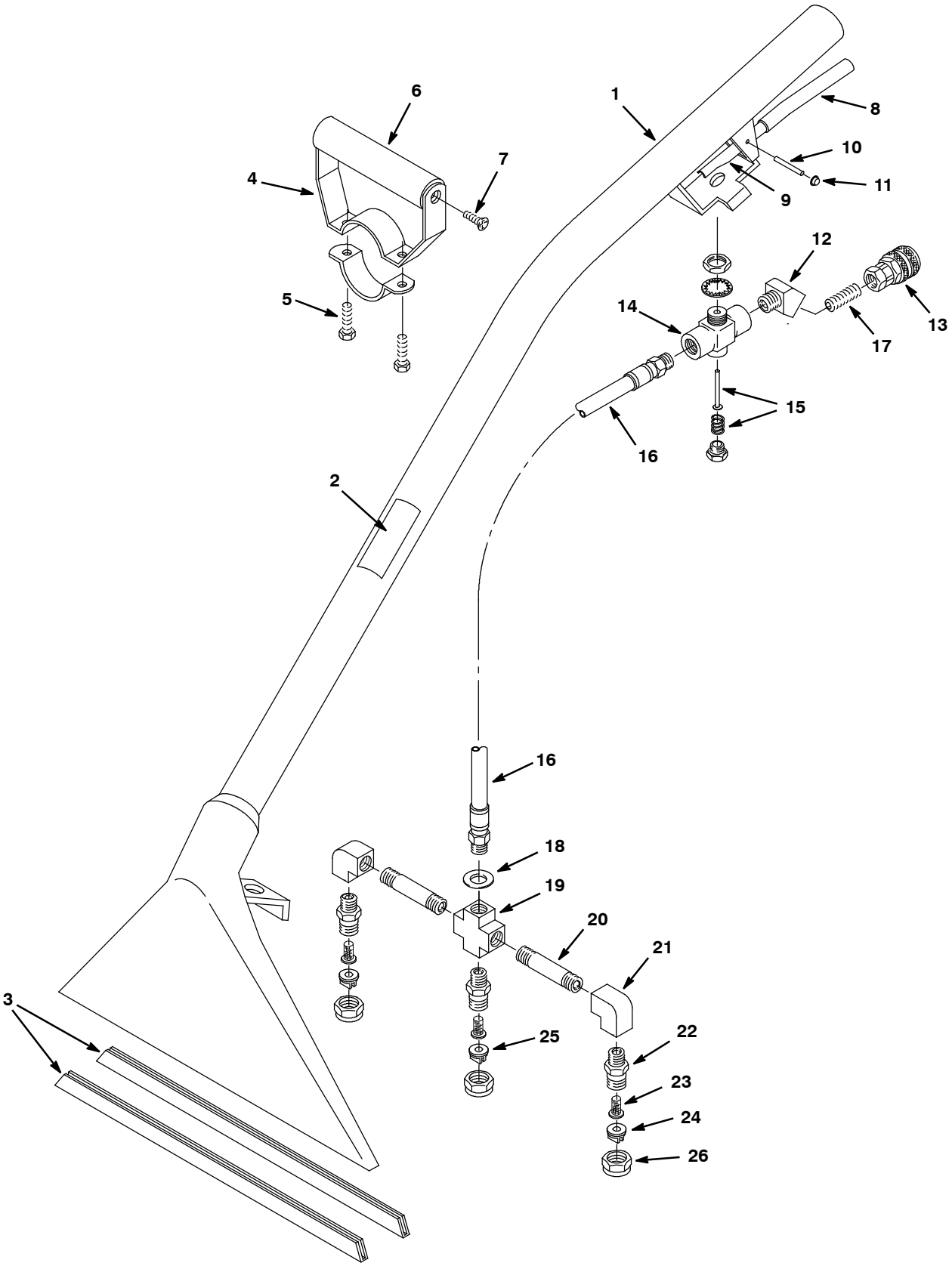

FLOOR TOOL, HIGH PRESSURE 13 in (330 mm)

	Ref.	Part No.	Serial Number		Description	Qty.
∇		600049	(00000000-	)●	Tool, Floor, 13.0 [Hp Series 60]	1
▲	1	200403.BK	(00000000-	)	Tool, Pickup, Floor, 12w, Blk	1
▲	2	120845	(00000000-	)	Label, Hi Press Floor	1
▲	3	200939	(00000000-	)●	Plate, Tool, Floor, 13.00 [Shoe]	2
▲∇	4	200927	(00000000-	)	Grip Hand Adj, Complt	1
▲▲	5	01697	(00000000-	)	Screw, Hex, .25- 20 X 0.62, Ss	2
▲▲	6	200912	(00000000-	)	Grip, Handle, Foam	1
▲▲	7	140834	(00000000-	)	Screw, Flt, .25- 20 X 0.62, Phl, Ss	2
▲	8	200809	(00000000-	)	Sleeve, Handle, Floor Tool	1
▲	9	200902	(00000000-	)	Handle, Valve [Imperial]	1
▲	10	140605	(00000000-	)	Pin, Handle [Imperial Eastman]	1
▲	11	140520	(00000000-	)	Nut, Push, .25id, Blk, Pl	2
▲	12	150403	(00000000-	)	Fitting, Brs, E45, Pf04/Pm04 [Taped]	1
▲	13	150913	(00000000-	)●	Fitting, Brs, Qdc, Pf04 [Ser60]	1
▲∇	14	210150	(00000000-	)●	Valve, Water, Flow Cntrl, Pf04/Pf04	1
▲▲	15	190603	(00000000-	)●	Imperial Eastman Kit, Repair	1
▲	16	160175	(00000000-	)	Hose Assy, Wand, 49.50l [End To End]	1
▲	17	150615	(00000000-	)	Fitting, Brs, Str, Pm04, Close, T	1
▲	18	140058	(00000000-	)	Washer, Flat, 0.54b 0.88d .06, Ss [Wand]	1
▲∇		700062	(00000000-	)	Bar Assy, Spray, 12inch, W/O Tip[Flr Tl]	1
▲▲	19	150700	(00000000-	)	Fitting, Brs, Cross, Pf04/Pf04/Pf04/Pf04	1
▲▲	20	150600	(00000000-	)	Fitting, Brs, Nipple, Pm04 X 2.0 [Taped]	2
▲▲	21	150401	(00000000-	)	Fitting, Brs, E90, Pf04/Pf04	2
▲▲	22	200993	(00000000-	)	Fitting, Brs, Pm04 [Spray Body]	3
▲	23	200996	(00000000-	)●	Filter, Screen, 100mesh, Check Valve	3
▲	24	200986	(00000000-	)●	Fitting, Ss, Tip [9502]	2
▲	25	200988	(00000000-	)●	Fitting, Ss, Tip [11002]	1
▲	26	200994	(00000000-	)●	Cap, Nozzle, Spray [#8002]	3
▲	N/S	200170	(00000000-	)	Squeegee Assy, 380mm /15.0, Complt	1

∇ ASSEMBLY

▲ INCLUDED IN ASSEMBLY