i-mop® XXL plus

SCRUBBER

Parts Manual

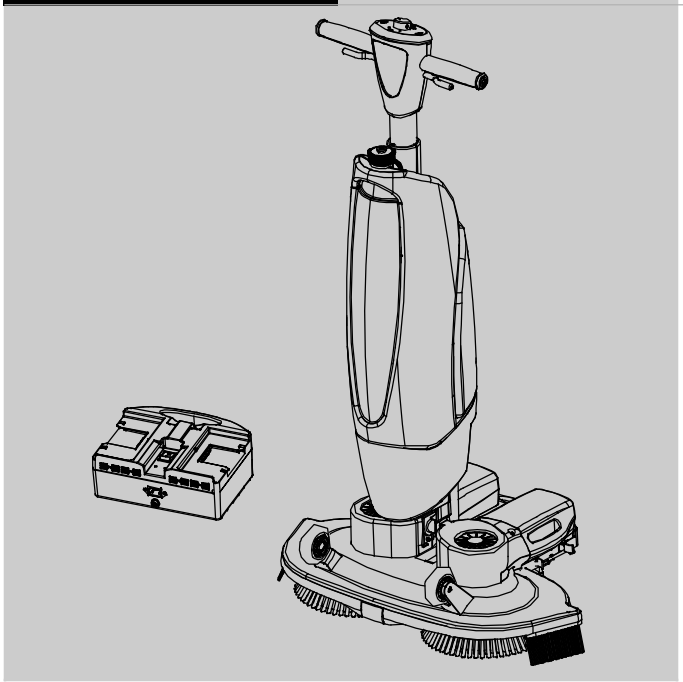

(S/N 640000-)

Model Part No.:
1264255 - i-mop XXL plus w/ charger & battery
9022387 - i-mop XXL plus w/ charger & extra battery
1264257 - i-charge 9 battery charger

North America

For the latest Parts manuals and other language Operator manuals, visit:

www.tennantco.com/manuals

9022732
Rev. 01 (08-2024)

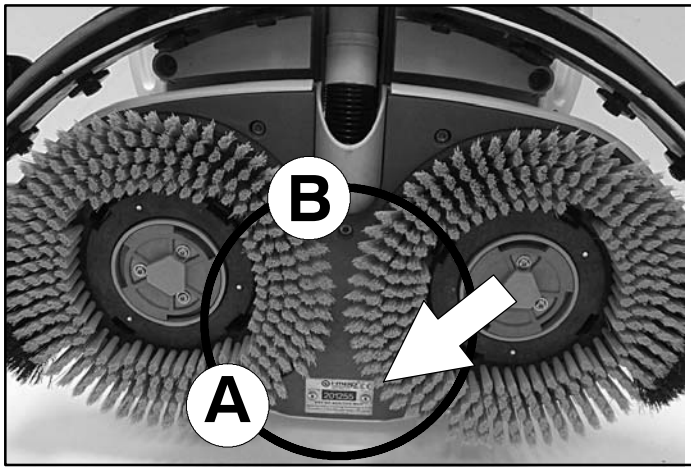

Note: A second serial number label is also located on the handle stem.

Ref	Part No.	Serial Number	Description	Qty.
1	82681	(000000-)	Bracket Wldt, Lpg Mount	1
▽ 2	63810	(000000-)	Latch Assy, Lpg Tank Mtg, W/Nut	4
▲ 3	51839	(000000-)	Nut Adjustable, Lpg Tank Mtg	2
4	49263	(000000-)	Tie, Cable	3
D	82556	(000000- 001039)	Bracket, Vaporizer	1
	54930	(000000-)	Vaporizer, LPG	1

C

HOW TO ORDER PARTS - See diagram above

Only use TENNANT Company supplied or equivalent parts. Parts and supplies may be ordered online, by phone, by fax or by mail.

Follow the steps below to ensure prompt delivery.

1. **(A)** Identify the machine model.
2. **(B)** Identify the machine serial number from the data label.
3. **(C)** Ensure the proper serial number is used from the parts list.
4. Identify the part number and quantity. Do not order by page or reference numbers.
5. Provide your name, company name, customer ID number, billing and shipping address, phone number and purchase order number.
6. Provide detail shipping instructions.

(D) ▽ - identifies an assembly
▲ - identifies parts included in assembly

Please fill out at time of installation for future reference.

Model No. - _____

Serial No. - _____

Machine Options - _____

Sales Rep. - _____

Sales Rep. phone no. - _____

Customer ID Number - _____

Installation Date - _____

Tennant Company
10400 Clean Street
Eden Prairie, MN 55344-2650 USA
Phone: (800) 553-8033
www.tennantco.com

Specifications and parts are subject to change without notice.

Copyright © 2024 TENNANT Company, Printed in U.S.A.

STANDARD PARTS

RECOMMENDED SPARE PARTS LIST 5
HANDLE ASSEMBLY 6
HANDLE ASSEMBLY - CONT'D 8
CONTROL CONSOLE ASSEMBLY 10
CLEAN WATER TANK ASSEMBLY 12
DIRTY WATER TANK ASSEMBLY 14
SCRUB HEAD ASSEMBLY 16
BRUSH MOTOR ASSEMBLY 18
BRUSH DRIVER ASSEMBLY 20
PAD DRIVER ASSEMBLY 22
SQUEEGEE ASSEMBLY 24
MAIN LEVER ASSEMBLY 26
BATTERY PACK ASSEMBLY 28
BATTERY CHARGER ASSEMBLY 30
I- BALANCE ASSEMBLY 32
WALL CHARGERS (OPTION) 33
ELECTRICAL DIAGRAM 34

GENERAL RECOMMENDED MAINTENANCE ITEMS

	Part No.	Serial Number	Description	Qty.
	1237713	(640000-)	Brush, Med, Blu, 11.8 [Xxl Qty 2] (Standard - Medium Duty Daily Scrubbing)	1
	1237714	(640000-)	Brush, Soft, Lt Blu, 11.8 [Xxl Qty 2] (Option - Soft Light Duty Cleaning)	1
	1237715	(640000-)	Brush, Hard, Red, 11.8 [Xxl Qty 2] (Option - Heavy Duty Deep Cleaning & Grout)	1
	1237716	(640000-)	Driver Assy, Pad, Blu, 11.7 [Xxl Qty 2]	1
	1237718	(640000-)	Pad, Red, 10.6 [Xxl Box Of 10] (Cleaning)	1
	1237717	(640000-)	Pad, White, 10.6 [Xxl Box Of 10] (Buffing)	1
	1237719	(640000-)	Pad, Green, 10.6 [Xxl Box Of 10] (Scrubbing)	1
	1237720	(640000-)	Pad, Blu, 10.6 [Xxl Box Of 10] (Scrubbing)	1
	1237721	(640000-)	Pad, Black, 10.6 [Xxl Box Of 10] (Light Stripping)	1
	1237725	(640000-)	Pad, Green, 10.6 [Xxl Twister Qty 2] (Diamond Polishing Pad - Daily Cleaning)	1
	1237722	(640000-)	Pad, Yellow, 10.6 [Xxl Twister Qty 2] (Diamond Polishing Pad - Periodic Cleaning)	1
	1237726	(640000-)	Pad, White, 10.6 [Xxl Twister Qty 2] (Diamond Polishing Pad - Deep Cleaning)	1
	1237727	(640000-)	Pad, Red, 10.6 [Xxl Twister Qty 2] (Diamond Polishing Pad - Deep Cleaning Aggressive)	1
	1237723	(640000-)	Pad, Orange, 10.6 [Xxl Twister Qty 2] (Diamond Polishing Pad - Ceramic Tiles)	1
	1237724	(640000-)	Pad, Blu, 10.6 [Xxl Twister Qty 2] (Diamond Polishing Pad - High Traffic Areas)	1
	1237729	(640000-)	Blade, Sqge, Front 27.3 [Xxl Lina] (Standard - Red Linatex)	1
	1237731	(640000-)	Blade, Sqge, Frnt, 27.3 [Xxl Ure] (Option)	1
	1237730	(640000-)	Blade, Sqge, Rear, 28.7 [Xxl Lina] (Standard - Red Linatex)	1
	1237732	(640000-)	Blade, Sqge, Rear, 28.7 [Xxl Ure] (Option)	1
	1237747	(640000-)	Motor, Brush, Rh [Xxl]	1
	1237746	(640000-)	Motor, Brush, Lh [Xxl]	1
	1266767	(640000-)	Circuitboard Kit, Contrl [Teal I- Mop]	1
	1252648	(640000-)	Valve Asm, Complete, w/ wire connector [Xl & Xxl]	1
	1266788	(640000-)	Caster, Glide, Squeegee (Includes Qty 1 Assy)	2
▽	1266786	(640000-)	Bracket, Caster, Static, Gray (Includes Qty 1 Assy)	1
▲	1267130	(640000-)	Caster Kit, Squeegee [I- Mop]	1
▽	1266791	(640000-)	Bracket, Caster, Swivel, Gray[Teal I- Mop	1
▲	1267130	(640000-)	Caster Kit, Squeegee [I- Mop]	2
▽	1255493	(640000-)	Fan Kit, Vac [Imop Xl & Xxl & Plus]	1
▲	1246375	(640000-)	Gasket Set, Motor, Vacuum [Xl & Xxl]	1
	1232675	(640000-)	Cover, Brush, Motor (Includes Qty 2 Cover Assemblies)	1
	1266713	(640000-)	Hinge Assy, Lever [Teal I- Mop]	1
	1266757	(640000-)	Transport Kit, Wheel, Rh [Teal I- Mop]	1
	1266756	(640000-)	Transport Kit, Wheel, Lh [Teal I- Mop]	1
	1232676	(640000-)	Clip, Retaining, Tank (Includes Qty 2 Clip Assemblies)	1
	1232519	(640000-)	Coupling, Water	1
	1267119	(640000-)	Connector, Hose, Stretch, Gray [I- Mop]	1
	1267121	(640000-)	Hose, Stretch, Complete [I- Mop]	1
	1251765	(640000-)	Float Asm, Ball [xl & xxl plus imop]	1
	1267125	(640000-)	Grip Kit, Handle [Xxl Teal I- Mop]	2
	1237733	(640000-)	Battery Kit, [Xxl I- Mop Left & Right]	1
	1264257	(640000-)	Charger, Batt [+Teal Xxl Model]	1

HANDLE ASSEMBLY

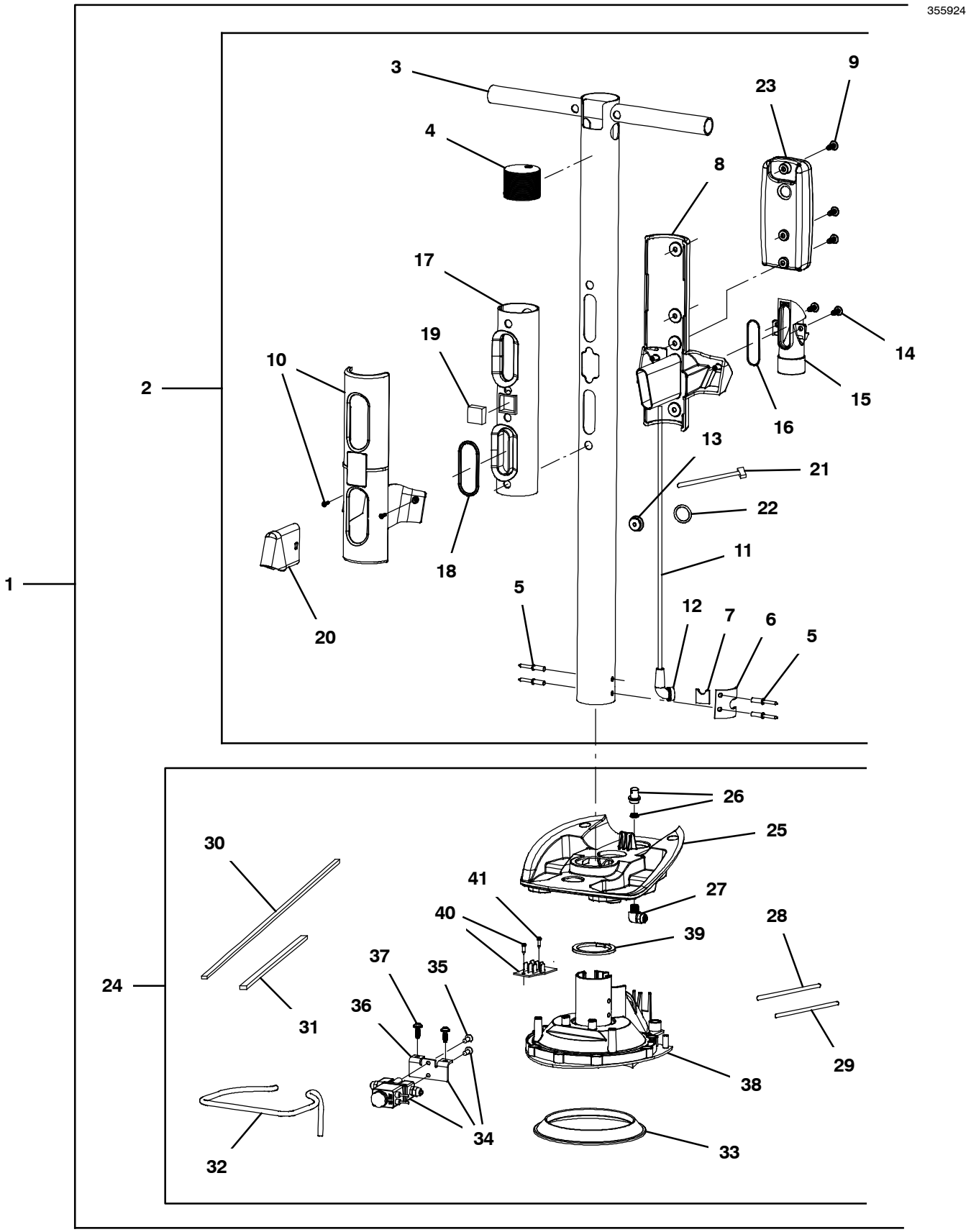

HANDLE ASSEMBLY

	Ref.	Part No.	Serial Number	Description	Qty.
	1	1266766	(640000-)	Tube Assy, Inlet [Teal Xxl I- Mop] (Includes Items #2- 41)	1
∇	2	1267131	(640000-)	Tube Weldment, Inlet [Xxl Teal I- Mop] (Includes Items #2- 22)	1
▲∇	3	1266765	(640000-)	Handle Wldt, Tube [Teal Xxl I- Mop]	1
▲▲	4	N/A	(640000-)	End Cap Inlet Tube	1
▲▲	5	N/A	(640000-)	Rivet With Dia. 5mm & Length 10mm	4
▲▲	6	N/A	(640000-)	Sealing Pressure Plate	1
▲▲	7	N/A	(640000-)	Sealing Rubber Sheet Al Tube	1
▲∇		1266762	(640000-)	Holder, Tank, Rear [Teal I- Mop]	1
▲▲	8	N/A	(640000-)	Holder, Tank, Rear [Teal I- Mop]	1
▲▲	9	N/A	(640000-)	Screw Wn 5451 5.0x18 Ejot Delta Pt	3
▲▲	10	1246366	(640000-)	Holder, Tank, Front [Xl & Xxl Imop] (Incld Screws Qty 2)	1
▲∇		1266703	(640000-)	Cable, Utp, 100cm L [Teal I- Mop Xxl]	1
▲▲	11	N/A	(640000-)	Cable, Utp, 100cm L	1
▲▲	12	N/A	(640000-)	Power Cable Guiding Rubber	1
▲▲	13	N/A	(640000-)	Sealing Ring Sigar Utp Connector	1
▲	14	N/A	(640000-)	Screw Wn 5451 25x10 Ejot Delta Pt	2
▲∇		1266740	(640000-)	Seal, Tank, Recvy [Teal I- Mop]	1
▲▲	15	1267119	(640000-)	Connector, Hose, Stretch, Gray [I- Mop]	1
▲▲	16	N/A	(640000-)	Gasket For Hose Connector	1
▲▲	17	N/A	(640000-)	Seal, Tank, Recvy	1
▲▲	18	N/A	(640000-)	O- ring Wire Dia. 3mm, Od 46mm	1
▲▲	19	N/A	(640000-)	Magnet Top Unit Small 20x20x10mm	1
▲	20	1234953	(640000-)	Deflector, Tank, Recvy [Imop]	1
▲	21	N/A	(640000-)	Cable 3P 20Awg I- link L=400	1
▲	22	N/A	(640000-)	Rubber Ring Seal I- link Wiring Cable	1
	23	1266784	(640000-)	Pcb Assy Kit, [Teal I- Link Iot I- Mop]	1
∇	24	1232710	(640000-)	Motor Kit, Top	1
▲∇	25	1246367	(640000-)	Motor Hsg, Unit, Top [Xl & Xxl] (With Coupling & Filter)	1
▲▲	16	1261821	(640000-)	Fitting Kit, Coupling, W/Washer [Imop]	1
▲	27	1246369	(640000-)	Connector, Metal, Angle [Xl & Xxl Imop]	1
▲∇		1246373	(640000-)	Wire, Terminal, Motor [Xl & Xxl Imop]	1
▲▲	28	N/A	(640000-)	187 Terminal + Wire 14awg Red, L=280mm 250 Terminal	1
▲▲	29	N/A	(640000-)	187 Terminal + Wire 14awg Blk, L=280mm 250 Terminal	1
▲∇		1246370	(640000-)	Gasket Set, Sealing, Motr [Xl & Xxl Imop	1
▲▲	30	N/A	(640000-)	Sealing Gasket Eva 3x1.5x593mm	1
▲▲	31	N/A	(640000-)	Sealing Gasket Eva 4x2.5x150mm	1
▲	32	N/A	(640000-)	Water Channel Dia. 6mm L:225mm	1
▲	33	N/A	(640000-)	Vacuum Motor Sealing Top	1
∇	34	1252648	(640000-)	Valve Asm, Complete, w/ wire connector [Xl & Xxl]	1
▲▲	35	1234975	(640000-)	Screw, Flt, Soc, M4 X 10 Ss [10x, Imop]	2
▲▲	36	N/A	(640000-)	Megnetic Ventil Fixation Plate Stainless Steel	1
▲∇		1246374	(640000-)	Connector Kit, Motor, Vacuum (Includes Items #37- 41)	1
▲▲	37	N/A	(640000-)	Screw M3x12 Crosshead Selftapping Bl- ni Sst	2
▲▲	38	N/A	(640000-)	Motor Unit Frame	1
▲▲	39	N/A	(640000-)	Motor Unit Frame Rubber	1
▲	40	1232486	(640000-)	Circuitboard, Valve (Not Included In Assy P/N 1232710 Item #24)	1
▲	41	N/A	(640000-)	Screw M3x12 Crosshead Selftapping Bl- ni Sst	2

∇ ASSEMBLY

▲ INCLUDED IN ASSEMBLY

N/A = NOT AVAILABLE SEPARATELY - MUST ORDER ASSEMBLY (∇)

HANDLE ASSEMBLY - CONT'D

355925

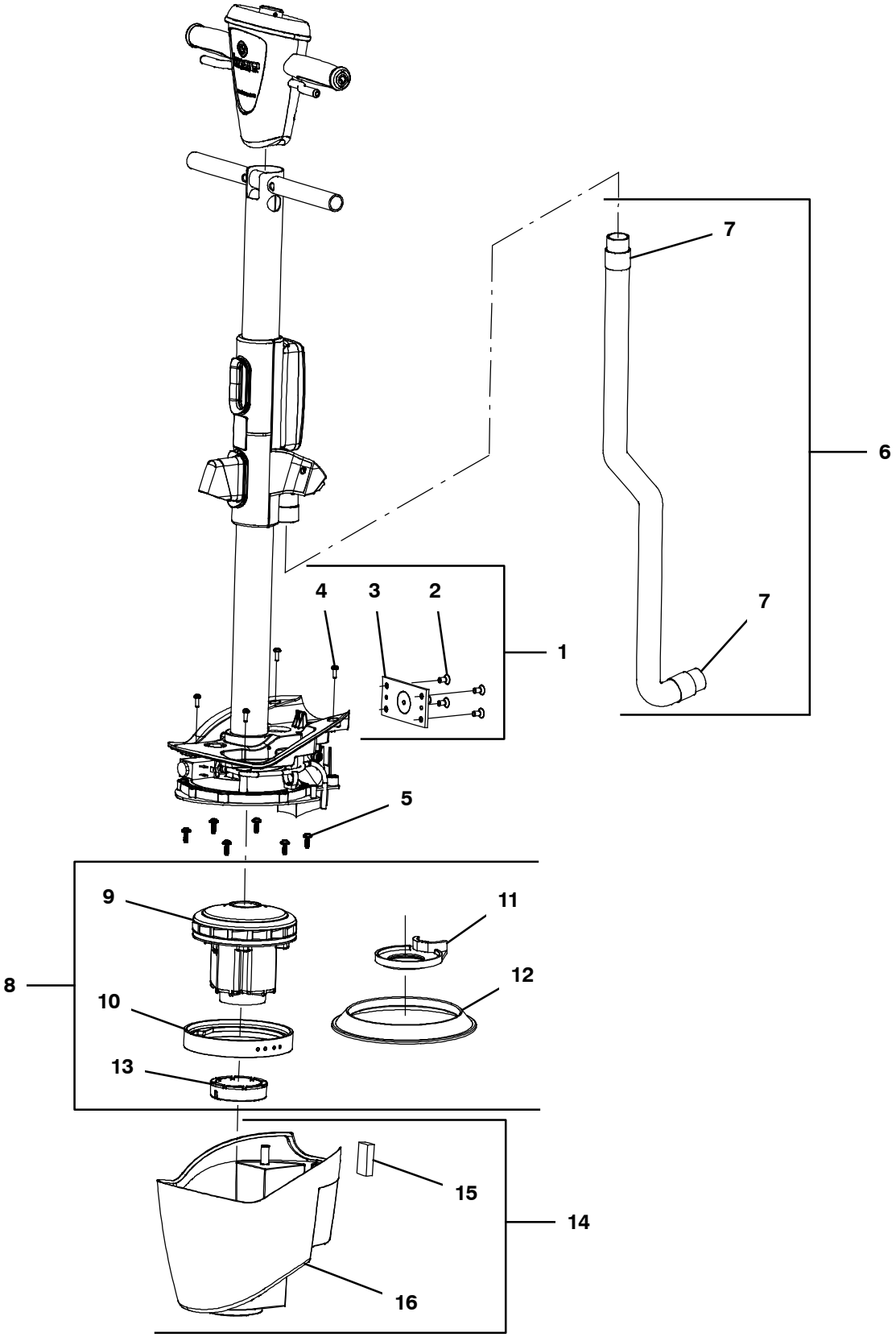

HANDLE ASSEMBLY - CONT'D

	Ref.	Part No.	Serial Number	Description	Qty.
∇	1	1232694	(640000-)	Hinge Kit, Lever	1
▲	2	N/A	(640000-)	Count Sunk Screw N3.5x13 Philips Head	2
▲	3	N/A	(640000-)	Hinge Welding Assy Top Unit	1
▲	4	1234974	(640000-)	Screw, Flt, Soc, M6 X 12 Nl [10x, Imop]	4
▲	5	N/A	(640000-)	Screw Wn 5451 5.0x14 Ejot Delta Pt	6
∇	6	1267121	(640000-)	Hose, Stretch, Complete [I- Mop]	1
▲	7	1267113	(640000-)	Cuff, Hose, W/Hook [I- Mop]	2
∇	8	1255493	(640000-)	Fan Kit, Vac [Imop Xl & Xxl & Plus]	1
▲∇	9	N/A	(640000-)	Domel Vacuum Cleaner Motor	1
▲▲		1246373	(640000-)	Wire, Terminal, Motor [Xl & Xxl Imop]	1
▲	10	N/A	(640000-)	Vac Motor Sealing Support	1
▲	11	N/A	(640000-)	Vac Motor Sealing Bottom	1
▲∇		1246375	(640000-)	Gasket Set, Motor, Vacuum [Xl & Xxl]	1
▲▲	12	N/A	(640000-)	Center Sealing Gasket Top Vacuum Motor	1
▲▲	13	N/A	(640000-)	Vacuum Motor Sealing Top	1
∇	14	1232711	(640000-)	Cover Kit, Fan	1
▲	15	N/A	(640000-)	Magnet Top Unit	1
▲	16	N/A	(640000-)	Motor Unit Cover	1

∇ ASSEMBLY

▲ INCLUDED IN ASSEMBLY

N/A = NOT AVAILABLE SEPARATELY - MUST ORDER ASSEMBLY (∇)

CONTROL CONSOLE ASSEMBLY

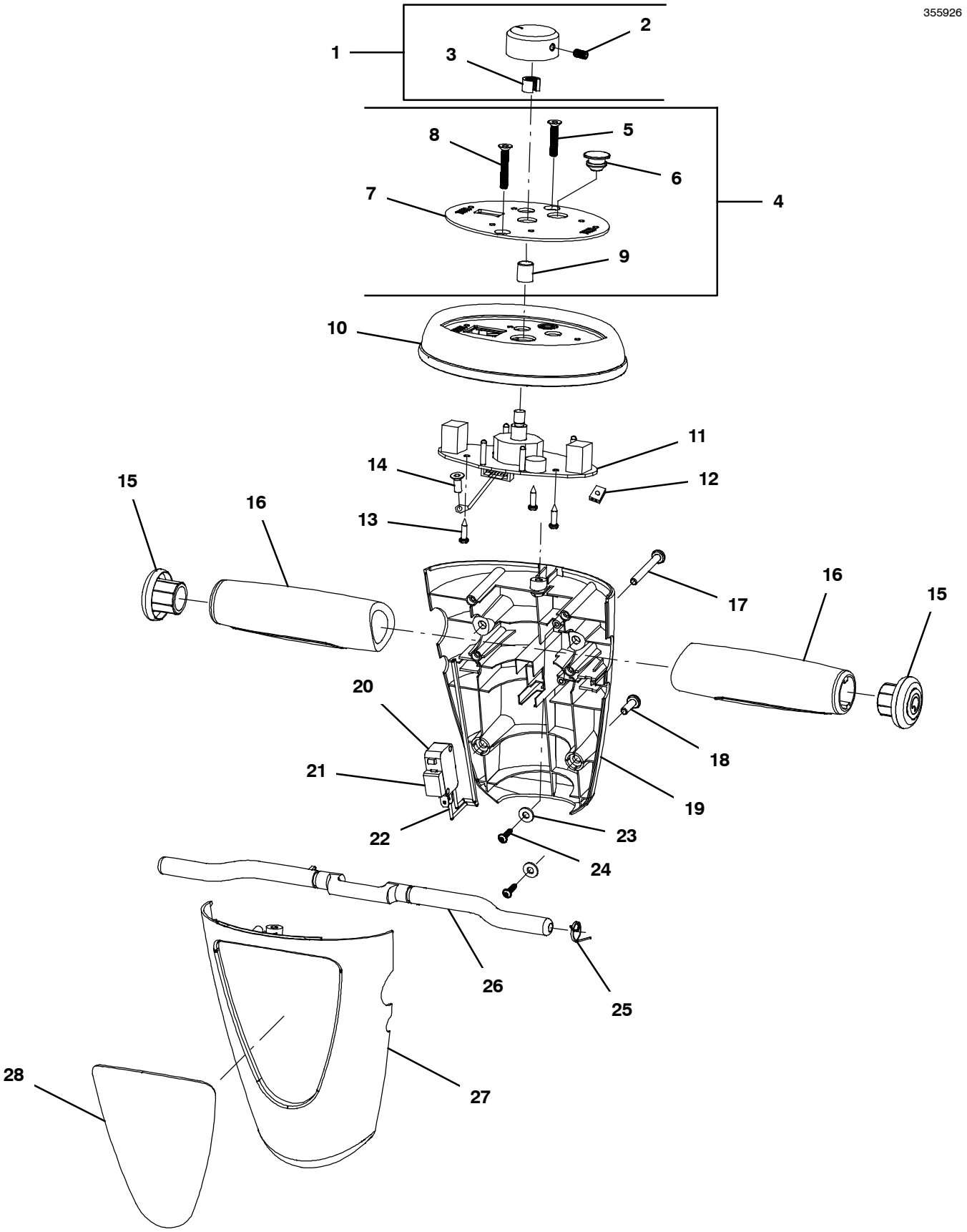

CONTROL CONSOLE ASSEMBLY

	Ref.	Part No.	Serial Number	Description	Qty.
∇		1267123	(640000-)	Control Unit Assembly [I- Mop]	1
▲∇	1	1232684	(640000-)	Knob Kit, Housing, Top [xl]	1
▲▲	2	N/A	(640000-)	Hexagon Socket Set Screw M4 x 8	1
▲▲	3	N/A	(640000-)	Fixation Insert Turning Button	1
▲∇	4	1267122	(640000-)	Label, Console [I- Mop]	1
▲▲	5	N/A	(640000-)	M4x25 Countersunk Screw Stainless Steel	1
▲▲	6	N/A	(640000-)	Rubber Block Water Save Adjustment Hole[A]	1
▲▲	7	N/A	(640000-)	Decal Kit, Instr, Dash [xl]	1
▲▲	8	N/A	(640000-)	M4x20 Countersunk Screw Stainless Steel	1
▲▲	9	N/A	(640000-)	Water Save Button	1
▲	10	1266705	(640000-)	Contrl Hsg, Top[Teal W/Bmpr Xl&Xxl I- Mop	1
▲∇		1266767	(640000-)	Circuitboard Kit, Contrl [Teal I- Mop] (Includes Decal #7 & Water Save Button #9)	1
▲▲	11	N/A	(640000-)	Circuitboard, Cntrl [XL&XXL Plus Imop]	1
▲▲	12	N/A	(640000-)	Switch Wire Clamp, Color: Black	1
▲▲	13	N/A	(640000-)	Screw M3x12 Crosshead Selftapping Bl- ni Sst	3
▲▲	14	N/A	(640000-)	Screw 4x10	1
▲∇		1267125	(640000-)	Grip Kit, Handle [Xxl Teal I- Mop]	2
▲▲	15	1267120	(640000-)	Cap, End [W/Logo I- Mop]	2
▲▲	16	1237759	(640000-)	Grip, Handle [Xxl I- Mop Set Of 2]	1
▲∇		1266706	(640000-)	Housing Kit, Rear, W/Hdwr [Teal Xl&Xxl	1
▲▲	17	N/A	(640000-)	Screw M4x35 Crosshead, Standard Thread Sst	2
▲▲	18	N/A	(640000-)	Screw M4x12 Crosshead, Standard Thread Sst	2
▲▲	19	N/A	(640000-)	Housing, Control, Rear [Teal I- Mop]	1
▲∇		1246344	(640000-)	Switch Kit, Power [Xl & Xxl Imop]	1
▲▲	20	N/A	(640000-)	Power Switch Control Unit Omoron	1
▲▲	21	N/A	(640000-)	Rubber Block 15x10x5mm Injected	1
▲▲	22	N/A	(640000-)	On/Off Switch Wires / L=250mm	1
▲▲	23	N/A	(640000-)	Plastic Washer 9x4x1mm	2
▲▲	24	N/A	(640000-)	Screw Wn 5451 25x10 Ejot Delta Pt	2
▲∇		1266704	(640000-)	Handle, Control [Teal, I- Mop]	1
▲▲	25	N/A	(640000-)	Spring Switch Lever Dia 0.8mm	1
▲▲	26	N/A	(640000-)	Handle, Control [Teal, Imop]	1
▲	27	1266708	(640000-)	Housing, Control, Front [Teal I- Mop]	1
▲	28	1266758	(640000-)	Plate, Label, Handle [Teal Xxl I- Mop]	1

∇ ASSEMBLY

▲ INCLUDED IN ASSEMBLY

N/A = NOT AVAILABLE SEPARATELY - MUST ORDER ASSEMBLY (∇)

CLEAN WATER TANK ASSEMBLY

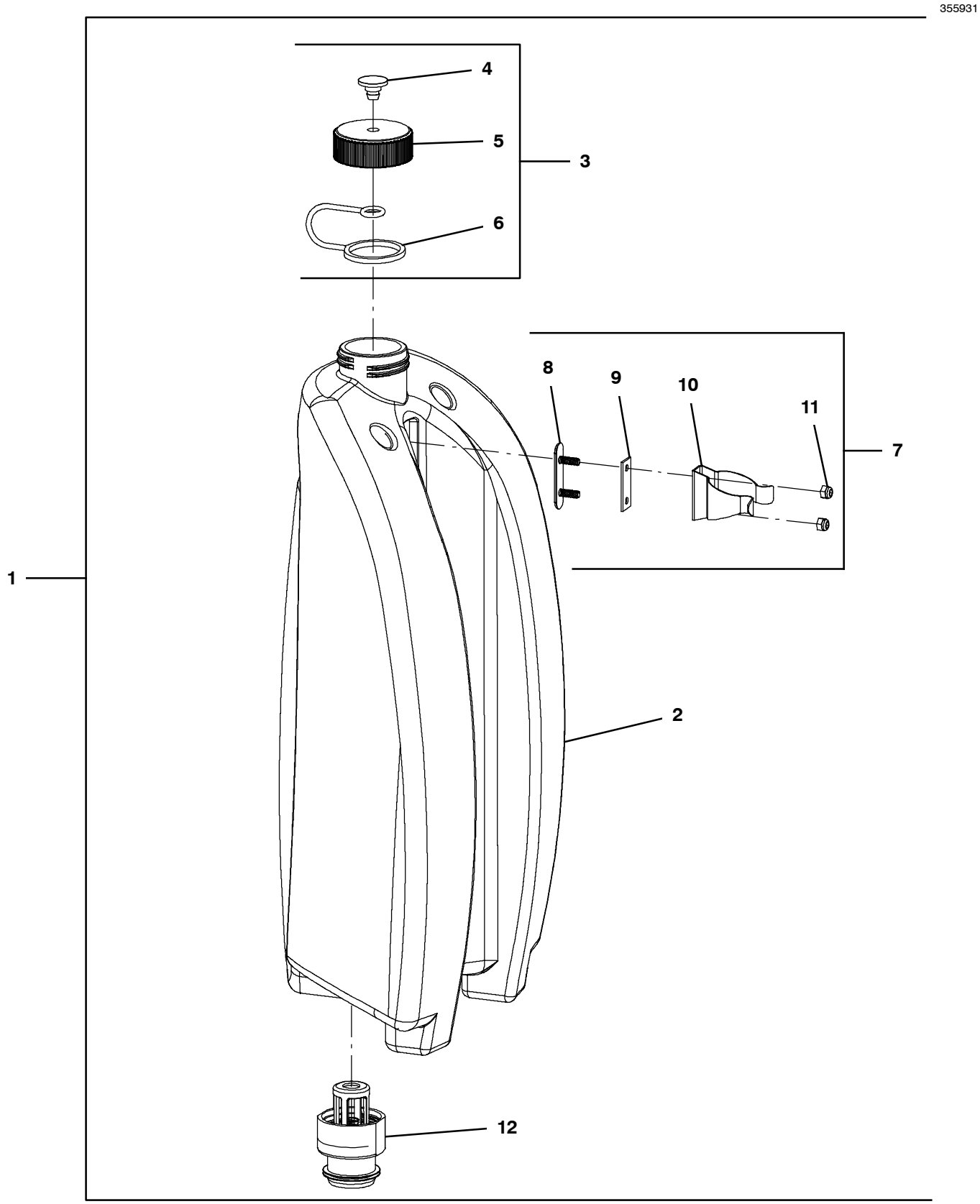

CLEAN WATER TANK ASSEMBLY

	Ref.	Part No.	Serial Number	Description	Qty.
∇	1	1265858	(640000-)	Tank Kit, Solution [Imop Xxl W/Blue Cap]	1
▲	2	N/A	(640000-)	Clean Water Compartment	1
▲∇	3	1232663	(640000-)	Cap Kit, Tank, Sol [Blue] (Standard)	1
▲∇	3	1232665	(640000-)	Cap Kit, Tank, Sol [Red] (Option)	1
▲∇	3	1232666	(640000-)	Cap Kit, Tank, Sol [Yellow] (Option)	1
▲∇	3	1232667	(640000-)	Cap Kit, Tank, Sol [Green] (Option)	1
▲▲	4	N/A	(640000-)	Sleeve Cap Holder Clean Tank	1
▲▲	5	N/A	(640000-)	Cap With Hole	1
▲▲	6	N/A	(640000-)	Cap Holder	1
▲∇	7	1232676	(640000-)	Clip, Retaining, Tank (Includes Qty 1 Clip Assembly)	1
▲▲	8	N/A	(640000-)	Holder Plate Clip Clean Tank	1
▲▲	9	N/A	(640000-)	Rubber Cushion For Metal Clip	1
▲▲	10	N/A	(640000-)	Clip, Retaining, Tank	1
▲▲	11	N/A	(640000-)	Nut M4 Nylon Stainless	2
▲	12	1232519	(640000-)	Coupling, Water	1

∇ ASSEMBLY

▲ INCLUDED IN ASSEMBLY

N/A = NOT AVAILABLE SEPARATELY - MUST ORDER ASSEMBLY (∇)

DIRTY WATER TANK ASSEMBLY

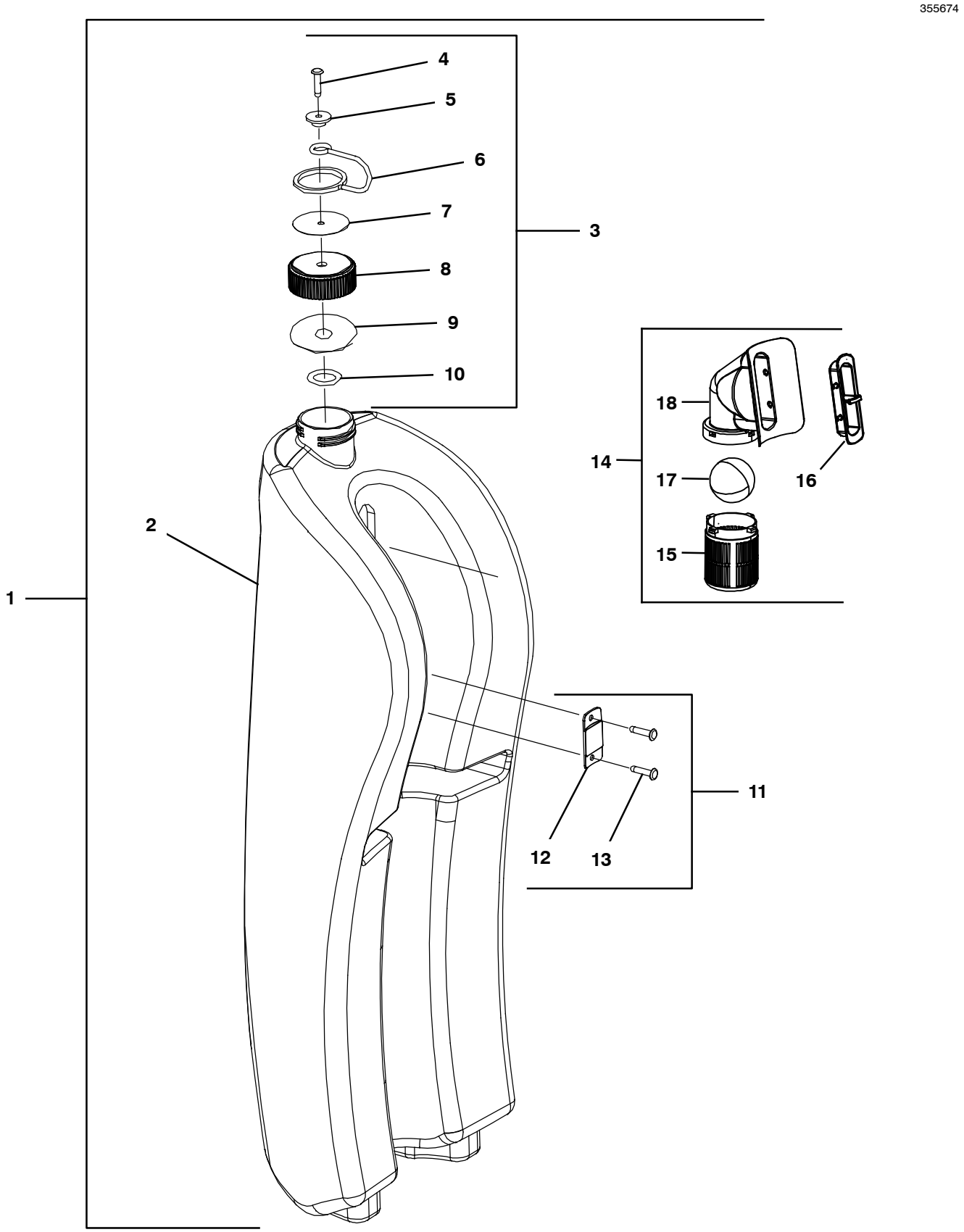

DIRTY WATER TANK ASSEMBLY

	Ref.	Part No.	Serial Number	Description	Qty.
∇	1	1265859	(640000-)	Tank Kit, Recovery, [I- Mop Xxl]	1
▲	2	N/A	(640000-)	Dirty Water Compartment	1
▲∇	3	1232661	(640000-)	Cap Kit, Tank, Rec	1
▲▲	4	N/A	(640000-)	Blind Rivet Nail 4 X 15 Mmg	1
▲▲	5	N/A	(640000-)	Sleeve Cap Holder	1
▲▲	6	N/A	(640000-)	Cap Holder	1
▲▲	7	N/A	(640000-)	Warning Plate On Dirty Tank Round Stainless 4.5mm	1
▲▲	8	N/A	(640000-)	Cap Without Hole	1
▲▲	9	N/A	(640000-)	Sealing Gasket Cap Dirty Tank	1
▲▲	10	N/A	(640000-)	Plastic Washer 9x4x1mm	1
▲∇	11	1232600	(640000-)	Plate, Mtg, Tank	1
▲▲	12	N/A	(640000-)	Fixation Plate Dirt Compartment	1
▲▲	13	N/A	(640000-)	Blind Rivet Nail 4 X 15 Mmg	2
▲∇	14	1251765	(640000-)	Float Asm, Ball [xl & xxl plus imop]	1
▲▲	15	1251766	(640000-)	Cage, Ball, Float [xl &xxl plus imop]	1
▲▲	16	1251767	(640000-)	Support, Housing [xl & xxl plus imop]	1
▲▲	17	1251768	(640000-)	Ball, Float [xl &xxl plus imop]	1
▲▲	18	1251769	(640000-)	Housing, Ball, Float [xl &xxl plus imop]	1

∇ ASSEMBLY

▲ INCLUDED IN ASSEMBLY

N/A = NOT AVAILABLE SEPARATELY - MUST ORDER ASSEMBLY (∇)

SCRUB HEAD ASSEMBLY

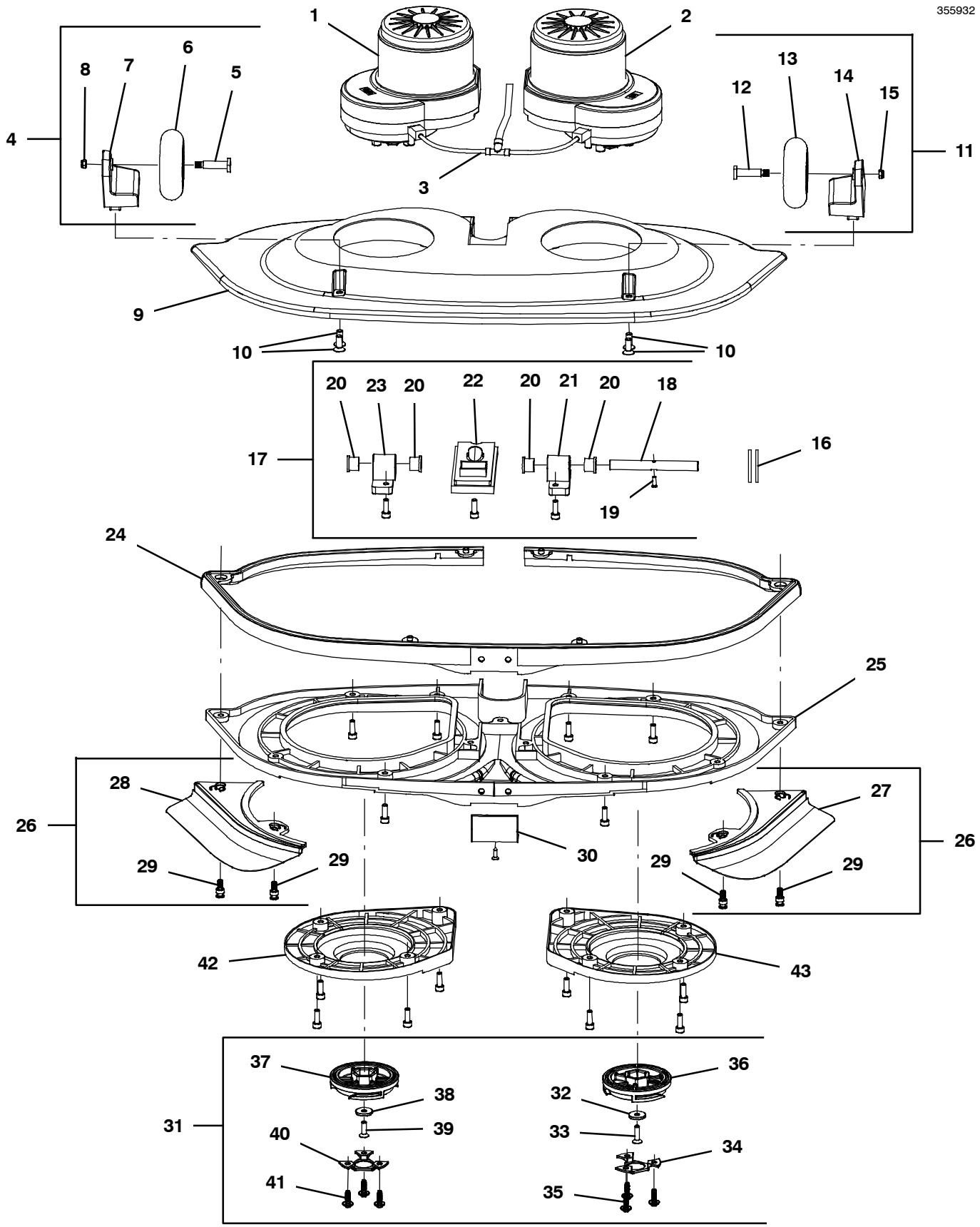

SCRUB HEAD ASSEMBLY

	Ref.	Part No.	Serial Number	Description	Qty.
	1	1237747	(640000-)	Motor, Brush, Rh [Xxl] (See Brush Motor Assembly)	1
	2	1237746	(640000-)	Motor, Brush, Lh [Xxl] (See Brush Motor Assembly)	1
	3	1232693	(640000-)	Fitting Assy, Water Channel [Imop]	1
∇	4	1266757	(640000-)	Transport Kit, Wheel, Rh [Teal I- Mop]	1
▲	5	N/A	(640000-)	Shaft Transport Caster	1
▲	6	N/A	(640000-)	Transport Caster	1
▲	7	N/A	(640000-)	Transport Wheel Pilar Right	1
▲	8	N/A	(640000-)	Nut M5 Nylon	1
	9	1266764	(640000-)	Cover, Motor [Teal Xxl I- Mop]	1
	10	1234969	(640000-)	Screw, Flt, Soc, M6 X 16 Nl [10x,Imop]	4
∇	11	1266756	(640000-)	Transport Kit, Wheel, Lh [Teal I- Mop]	1
▲	12	N/A	(640000-)	Shaft Transport Caster	1
▲	13	N/A	(640000-)	Transport Caster	1
▲	14	N/A	(640000-)	Transport Wheel Pilar Left	1
▲	15	N/A	(640000-)	Nut M5 Nylon	1
	16	N/A	(640000-)	Pedestal Shaft Pin	2
∇	17	1232714	(640000-)	Hinge Kit, Hd, Brush	1
▲	18	N/A	(640000-)	Chassis Hinge	1
▲	19	N/A	(640000-)	Nylok Screw Counter Sunk Bolt M4x12	1
▲	20	1246382	(640000-)	Bushing, Cover, Motor [Xxl Imop]	4
▲	21	N/A	(640000-)	Brush Unit Hinge Support Left	1
▲	22	N/A	(640000-)	Construction Cover Seal	1
▲	23	N/A	(640000-)	Brush Unit Hinge Support Right	1
	24	1237743	(640000-)	Bumper, Brush [Xxl]	1
	25	1237745	(640000-)	Cover, Brush, Bottom [Xxl]	1
∇	26	1265857	(640000-)	Splash Guard Kit, Lh & Rh [I- Mop Xxl]	1
▲	27	N/A	(640000-)	Splashing Guard Imop Left	1
▲	28	N/A	(640000-)	Splashing Guard Imop Right	1
▲	29	N/A	(640000-)	Bolt Splash Guard M5x19 Black	4
	30	1237736	(640000-)	Bumper, [Xxl]	1
∇	31	1232675	(640000-)	Cover, Brush, Motor (Includes Qty 2 Cover Assemblies)	1
▲∇		1246378	(640000-)	Drive, Brush, Left [Xl & Xxl Imop]	1
▲▲	32	N/A	(640000-)	Support Disk Driving Wheel Side Hole Dia 5mm	1
▲▲	33	1234973	(640000-)	Screw, Flt, Soc, M5 X 18.5 Lh Nl [Imop]	1
▲▲	34	N/A	(640000-)	Cover Brush Motor Screw Color: Blue	1
▲▲	35	N/A	(640000-)	Screw Wn 5451 50x14 Ejot Delta Pt	3
▲▲	36	N/A	(640000-)	Driving Wheel Bottom Left Color: Gray	1
▲∇		1246377	(640000-)	Drive, Brush, Right [Xl & Xxl]	1
▲▲	37	N/A	(640000-)	Driving Wheel Bottom Right Color: Gray	1
▲▲	38	N/A	(640000-)	Support Disk Driving Wheel Side Hole Dia 5mm	1
▲▲	39	1234972	(640000-)	Screw, Flt, Soc, M5 X 18.5 Nl [10x,Imop]	1
▲▲	40	N/A	(640000-)	Cover Brush Motor Screw Color: Blue	1
▲▲	41	N/A	(640000-)	Screw Wn 5451 50x14 Ejot Delta Pt	3
	42	1237738	(640000-)	Plate, Mount, Motor, Rh [Xxl]	1
	43	1237737	(640000-)	Plate, Mount, Motor, Lh [Xxl]	1

∇ ASSEMBLY

▲ INCLUDED IN ASSEMBLY

N/A = NOT AVAILABLE SEPARATELY - MUST ORDER ASSEMBLY (∇)

BRUSH MOTOR ASSEMBLY

355680

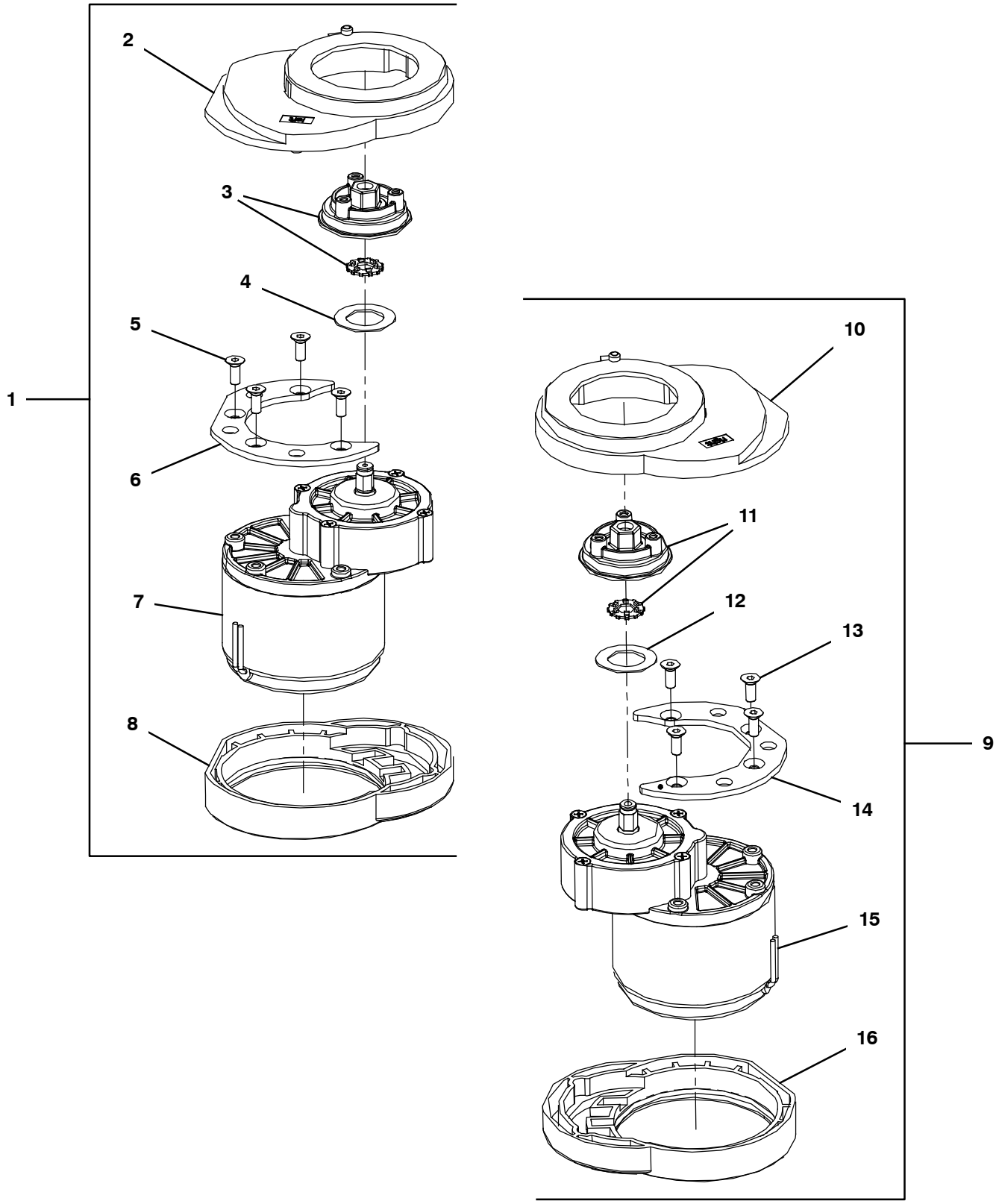

BRUSH MOTOR ASSEMBLY

	Ref.	Part No.	Serial Number	Description	Qty.
∇	1	1237746	(640000-)	Motor, Brush, Lh [Xxl]	1
▲	2	N/A	(640000-)	Brush Motor Support Rubber Left	1
▲	3	1237826	(640000-)	Wheel, Driving, W/Metal Insert [Xxl]	1
▲	4	N/A	(640000-)	Felt Brush Motor	1
▲	5	N/A	(640000-)	Nylock Screw Counter Sunk Bolt M6 x 16	4
▲	6	N/A	(640000-)	Brush Motor Construction Ring Left	1
▲	7	N/A	(640000-)	Brush Motor Helical Gears Left	1
▲	8	N/A	(640000-)	Brush Motor Fixation Conductive Rubber Left	1
∇	9	1237747	(640000-)	Motor, Brush, Rh [Xxl]	1
▲	10	N/A	(640000-)	Brush Motor Support Rubber Right	1
▲	11	1237826	(640000-)	Wheel, Driving, W/Metal Insert [Xxl]	1
▲	12	N/A	(640000-)	Felt Brush Motor	1
▲	13	N/A	(640000-)	Nylock Screw Counter Sunk Bolt M6 x 16	4
▲	14	N/A	(640000-)	Brush Motor Construction Ring Right	1
▲	15	N/A	(640000-)	Brush Motor Helical Gears Right	1
▲	16	N/A	(640000-)	Brush Motor Fixation Conductive Rubber Right	1

∇ ASSEMBLY

▲ INCLUDED IN ASSEMBLY

N/A = NOT AVAILABLE SEPARATELY - MUST ORDER ASSEMBLY (∇)

BRUSH DRIVER ASSEMBLY

355681

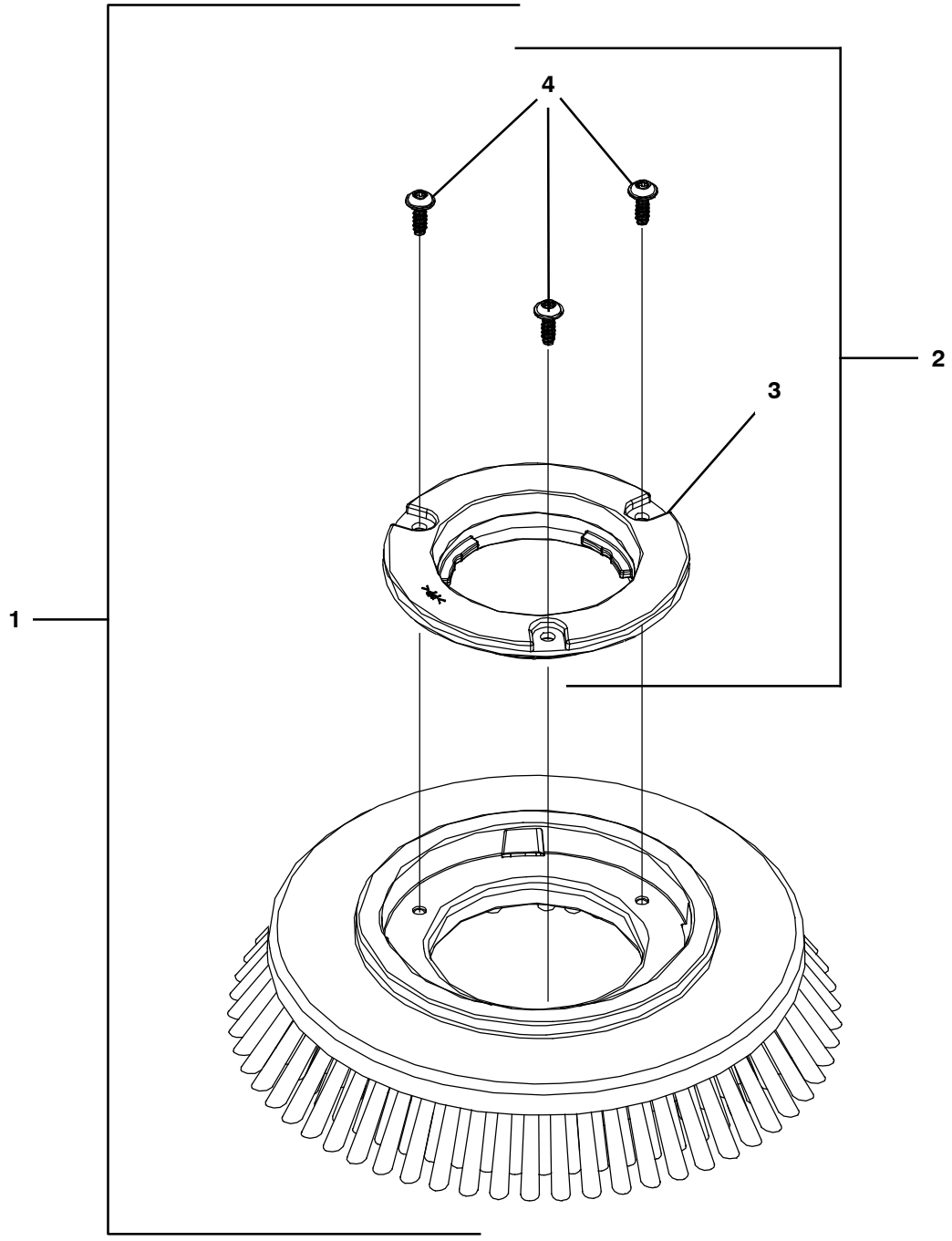

BRUSH DRIVER ASSEMBLY

	Ref.	Part No.	Serial Number	Description	Qty.
∇	1	1237713	(640000-)	Brush, Med, Blu, 11.8 [Xxl Qty 2] (Standard - Medium Duty Daily Scrubbing)	1
∇	1	1237714	(640000-)	Brush, Soft, Lt Blu, 11.8 [Xxl Qty 2] (Option - Soft Light Duty Cleaning)	1
∇	1	1237715	(640000-)	Brush, Hard, Red, 11.8 [Xxl Qty 2] (Option - Heavy Duty Deep Cleaning & Grout)	1
▲∇	2	1232620	(640000-)	Driver Kit, Brush [Blue] (Set of 2) (Standard)	1
▲∇	2	1232622	(640000-)	Driver Kit, Brush [Red] (Set of 2) (Option)	1
▲∇	2	1232624	(640000-)	Driver Kit, Brush [Yellow] (Set of 2) (Option)	1
▲∇	2	1232626	(640000-)	Driver Kit, Brush [Green] (Set of 2) (Option)	1
▲▲	3	N/A	(640000-)	Brush Locker [Blue] (Standard)	2
▲▲	3	N/A	(640000-)	Brush Locker [Red] (Option)	2
▲▲	3	N/A	(640000-)	Brush Locker [Yellow] (Option)	2
▲▲	3	N/A	(640000-)	Brush Locker [Green] (Option)	2
▲▲	4	N/A	(640000-)	Screw Wn 5451 50x14 Ejot Delta Pt	6

∇ ASSEMBLY

▲ INCLUDED IN ASSEMBLY

N/A = NOT AVAILABLE SEPARATELY - MUST ORDER ASSEMBLY (∇)

PAD DRIVER ASSEMBLY

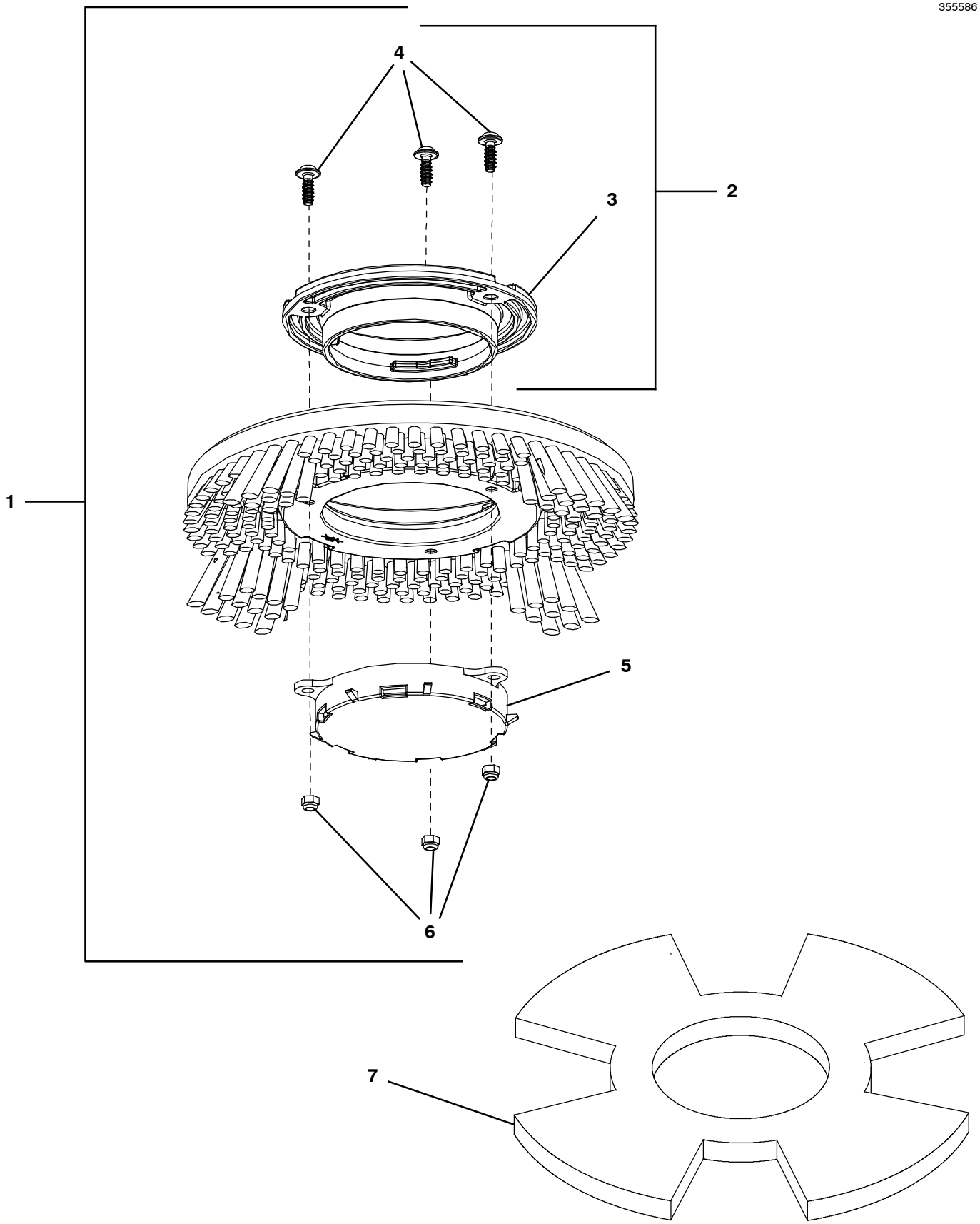

PAD DRIVER ASSEMBLY

	Ref.	Part No.	Serial Number	Description	Qty.
∇	1	1237716	(640000-)	Driver Assy, Pad, Blu, 11.7 [Xxl Qty 2]	1
▲∇	2	1232620	(640000-)	Driver Kit, Brush [Blue] (Standard)	2
▲∇	2	1232622	(640000-)	Driver Kit, Brush [Red] (Option)	2
▲∇	2	1232624	(640000-)	Driver Kit, Brush [Yellow] (Option)	2
▲∇	2	1232626	(640000-)	Driver Kit, Brush [Green] (Option)	2
▲▲	3	N/A	(640000-)	Brush Locker [Blue] (Standard)	2
▲▲	3	N/A	(640000-)	Brush Locker [Red] (Option)	2
▲▲	3	N/A	(640000-)	Brush Locker [Yellow] (Option)	2
▲▲	3	N/A	(640000-)	Brush Locker [Green] (Option)	2
▲▲	4	N/A	(640000-)	Screw Wn 5451 50x14 Ejot Delta Pt	6
▲	5	N/A	(640000-)	Assy Pad Holder Imop	2
▲	6	N/A	(640000-)	Nut M4 Nylon Stainless	6
	7	1237718	(640000-)	Pad, Red, 10.6 [Xxl Box Of 10] (Cleaning)	1
	7	1237717	(640000-)	Pad, White, 10.6 [Xxl Box Of 10] (Buffing)	1
	7	1237719	(640000-)	Pad, Green, 10.6 [Xxl Box Of 10] (Scrubbing)	1
	7	1237720	(640000-)	Pad, Blu, 10.6 [Xxl Box Of 10] (Scrubbing)	1
	7	1237721	(640000-)	Pad, Black, 10.6 [Xxl Box Of 10] (Light Stripping)	1
	7	1237725	(640000-)	Pad, Green, 10.6 [Xxl Twister Qty 2] (Diamond Polishing Pad - Daily Cleaning)	1
	7	1237722	(640000-)	Pad, Yellow, 10.6 [Xxl Twister Qty 2] (Diamond Polishing Pad - Periodic Cleaning)	1
	7	1237726	(640000-)	Pad, White, 10.6 [Xxl Twister Qty 2] (Diamond Polishing Pad - Deep Cleaning)	1
	7	1237727	(640000-)	Pad, Red, 10.6 [Xxl Twister Qty 2] (Diamond Polishing Pad - Deep Cleaning Aggressive)	1
	7	1237723	(640000-)	Pad, Orange, 10.6 [Xxl Twister Qty 2] (Diamond Polishing Pad - Ceramic Tiles)	1
	7	1237724	(640000-)	Pad, Blu, 10.6 [Xxl Twister Qty 2] (Diamond Polishing Pad - High Traffic Areas)	1

∇ ASSEMBLY

▲ INCLUDED IN ASSEMBLY

N/A = NOT AVAILABLE SEPARATELY - MUST ORDER ASSEMBLY (∇)

SQUEEGEE ASSEMBLY

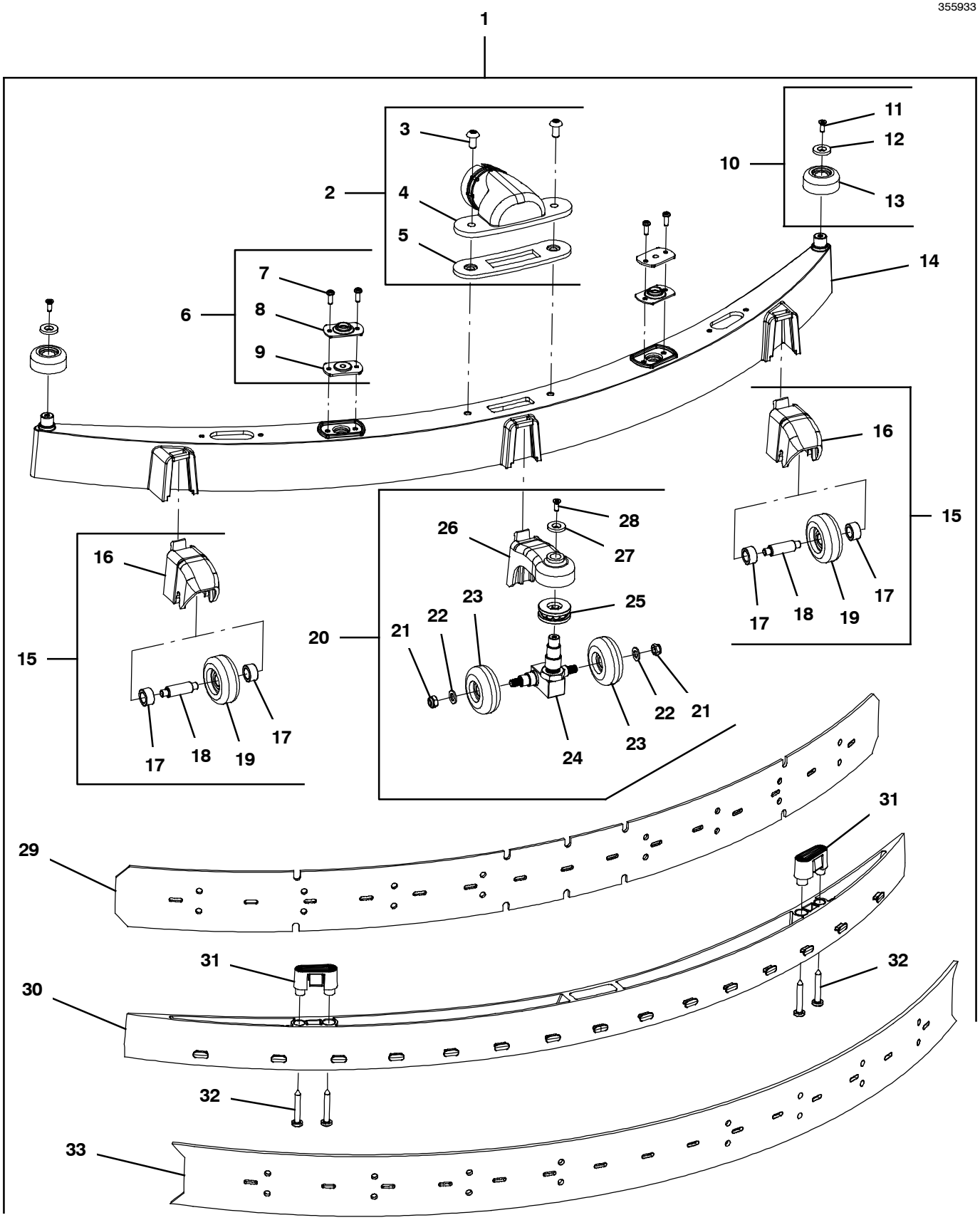

SQUEEGEE ASSEMBLY

	Ref.	Part No.	Serial Number	Description	Qty.
∇	1	1265856	(640000-)	Squeegee Assy, Scrbr, [I- Mop Xxl]	1
▲∇	2	1267118	(640000-)	Connector, Hose, Squeegee [I- Mop]	1
▲▲	3	N/A	(640000-)	Screw Countersunk Head Torx M3x8	2
▲▲	4	N/A	(640000-)	Squeegee Hose Connector- Up Yellow	1
▲▲	5	1234956	(640000-)	Gasket, Hose, Squeegee [Imop]	1
▲∇	6	N/A	(640000-)	Retaining Kit, Sqge	1
▲▲	7	N/A	(640000-)	Screw Cylinder Round Cap M3x8	4
▲▲	8	N/A	(640000-)	Plate, Mtg, Sqge [Imop] (Qty 1)	2
▲▲	9	1233871	(640000-)	Washer, Rbr, Sqge [Black, Imop] (Qty 1)	2
	9	1234948	(640000-)	Washer, Rbr, Sqge [Black, Imop, Qty 100]	1
▲∇	10	1266788	(640000-)	Caster, Glide, Squeegee [Teal I- Mop] (Includes Qty 1 Glide Castor Assembly)	2
▲▲	11	N/A	(640000-)	Screw Countersunk Head Torx M3x8	1
▲▲	12	N/A	(640000-)	Washer, Countersunk, [M3x13od Teal I- Mop	1
▲▲	13	N/A	(640000-)	Caster, Glide, Squeegee	1
▲	14	1266771	(640000-)	Frame, Main, Sqge [Teal Xxl I- Mop]	1
▲∇	15	1266786	(640000-)	Bracket, Caster, Static, Gray[Teal I- Mop (Includes Qty 1 Static Castor Assembly)	2
▲▲	16	N/A	(640000-)	Bracket, Caster, Static	1
▲▲	17	N/A	(640000-)	Caster, Spacer, Static [Teal I- Mop]	2
▲▲	18	N/A	(640000-)	Shaft, Caster [Teal I- Mop]	1
▲▲	19	1267130	(640000-)	Caster Kit, Squeegee [I- Mop]	1
▲∇	20	1266791	(640000-)	Bracket, Caster, Swivel, Gray[Teal I- Mop	1
▲▲	21	N/A	(640000-)	Nut Nylon M5 Stainless	2
▲▲	22	N/A	(640000-)	Washer M4 Stainless Steel 5x15x1mm	2
▲▲	23	1267130	(640000-)	Caster Kit, Squeegee [I- Mop]	2
▲▲	24	N/A	(640000-)	Shaft Assy Squeegee Dual Castor	1
▲▲	25	N/A	(640000-)	Ball Bearing Thrust	1
▲▲	26	N/A	(640000-)	Bracket, Caster, Swivel, Gray[Teal I- Mop	1
▲▲	27	N/A	(640000-)	Washer, Countersunk, [M3x13od Teal I- Mop	1
▲▲	28	N/A	(640000-)	Screw Countersunk Head Torx M3x8	1
▲	29	1237729	(640000-)	Blade, Sqge, Front 27.3 [Xxl Lina] (Standard - Red Linatex)	1
	29	1237731	(640000-)	Blade, Sqge, Frnt, 27.3 [Xxl Ure] (Option)	1
▲	30	1266773	(640000-)	Holder, Blade, Squeegee [Teal Xxl I- Mop]	1
▲∇		1266752	(640000-)	Holder, Button, Push, Sqg [Teal I- Mop	2
▲▲	31	N/A	(640000-)	Holder, Button, Push, Sqg	2
▲▲	32	N/A	(640000-)	Screw, Black, [St4x16 Ss Teal I- Mop]	4
▲	33	1237730	(640000-)	Blade, Sqge, Rear, 28.7 [Xxl Lina] (Standard - Red Linatex)	1
	33	1237732	(640000-)	Blade, Sqge, Rear, 28.7 [Xxl Ure] (Option)	1

∇ ASSEMBLY

▲ INCLUDED IN ASSEMBLY

N/A = NOT AVAILABLE SEPARATELY - MUST ORDER ASSEMBLY (∇)

MAIN LEVER ASSEMBLY

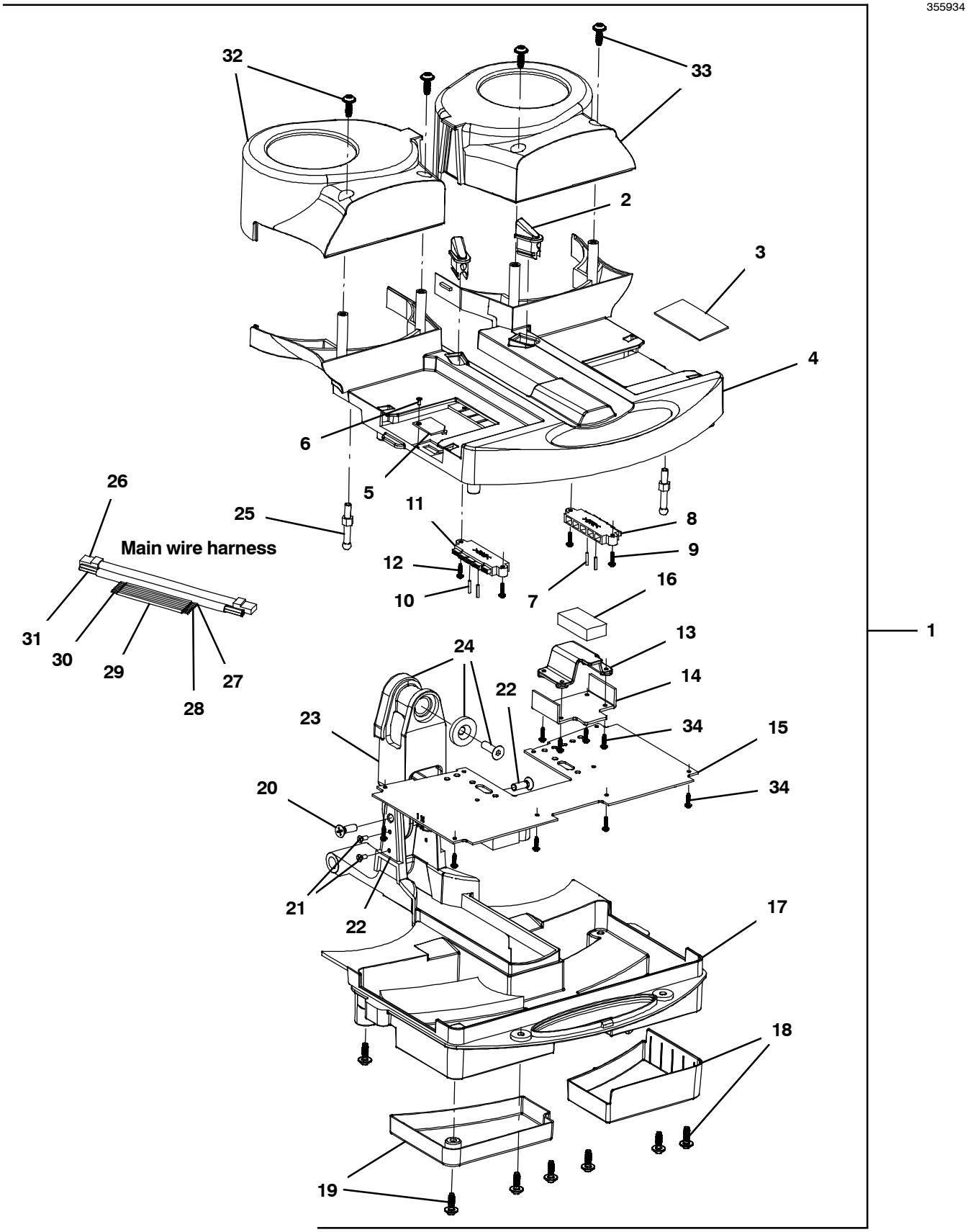

MAIN LEVER ASSEMBLY

	Ref.	Part No.	Serial Number	Description	Qty.
∇	1	1267126	(640000-)	Main Lever Assembly [Xxl Teal I- Mop]	1
▲∇		1267127	(640000-)	Cover Assy, Lever, Main [Xxl Teal I- Mop]	1
▲▲	2	N/A	(640000-)	Pcb Machine Seal	2
▲▲	3	N/A	(640000-)	Sticker Imop [Strong Magnets]	1
▲▲	4	1237754	(640000-)	Cover, Main, White [Xxl]	1
▲▲	5	1237798	(640000-)	Cover, Slot, Usb [Xxl]	1
▲▲	6	N/A	(640000-)	Screw Counter Sunk M1.7x6	1
▲∇		1246387	(640000-)	Connector, Battery, Rh [Xl & Xxl Imop]	1
▲▲	7	N/A	(640000-)	Alignment Pin Longer Version	2
▲▲	8	N/A	(640000-)	Battery Connector Male Right Color: Gray	1
▲▲	9	N/A	(640000-)	Screw Wn 5451 25x10 Ejot Delta Pt	2
▲∇		1246386	(640000-)	Connector, Battery, Lh [Xl & Xxl Imop]	1
▲▲	10	N/A	(640000-)	Alignment Pin Longer Version	2
▲▲	11	N/A	(640000-)	Battery Connector Male Left Color: Blue	1
▲▲	12	N/A	(640000-)	Screw Wn 5451 25x10 Ejot Delta Pt	2
▲	13	N/A	(640000-)	Magnet Top Unit Holder Color: Gray	1
▲	14	N/A	(640000-)	Steel Cover Isolation Magnet T=3mm	1
▲	15	1266781	(640000-)	Circuitboard, Main, Pcb [Teal Gyro I- Mop	1
▲	16	N/A	(640000-)	Magnet Top Unit 40x20x10mm	1
▲	17	1266714	(640000-)	Housing, Lever, Main [Teal I- Mop]	1
	18	1267116	(640000-)	Plate, Name, Bottom, White [I- Mop]	1
	19	1267117	(640000-)	Plate, Name, Bottom, White [I- Mop]	1
▲∇		1246389	(640000-)	Plate Asm, Hinge [Xl & Xxl Imop]	1
▲▲	20	1234955	(640000-)	Plate, Sppt, Lever (2pc) [Imop]	2
▲▲	21	1234971	(640000-)	Screw, Flt, Soc, M3 X 8 Ss Nl [10x,Imop]	4
▲▲	22	1234976	(640000-)	Screw, Flt, Soc, M5 X 16 Nl [10x, Imop]	2
∇	23	1266713	(640000-)	Hinge Assy, Lever [Teal I- Mop]	1
▲▲	24	1237828	(640000-)	Hardware Kit, Disk, Screw, Cover [Imop]	1
▲	25	1246385	(640000-)	Pin, Squeegee [Xl & Xxl Imop] (Includes Qty 2)	1
▲∇		1266702	(640000-)	Lever Asm, Main, Utp [Xl & Xxl Imop]	1
▲▲	26	N/A	(640000-)	Male Connector + Wires 14awg Red 150mm	2
▲▲	27	N/A	(640000-)	Male Connector + Connector Wires 14awg Black 150mm	2
▲▲	28	N/A	(640000-)	Wires For Brush Unit 14awg Black L=280mm	2
▲▲	29	N/A	(640000-)	Wires For Brush Unit 14awg Red L=280mm	2
▲▲	30	N/A	(640000-)	Power Cable 3 Wires [1.5mm 2 L=630mm]	1
▲▲	31	N/A	(640000-)	Lever Asm, Main, Utp [Teal Xl&Xxl Imop]	1
▲	32	1266761	(640000-)	Cover, Motor, Rh [Teal Xxl I- Mop] (Includes Screws)	1
▲	33	1266760	(640000-)	Cover, Motor, Rh [Teal Xxl I- Mop] (Includes Screws)	1
▲	34	N/A	(640000-)	Screw Wn 5451 25x10 Ejot Delta Pt	12

∇ ASSEMBLY

▲ INCLUDED IN ASSEMBLY

N/A = NOT AVAILABLE SEPARATELY - MUST ORDER ASSEMBLY (∇)

BATTERY PACK ASSEMBLY

355682

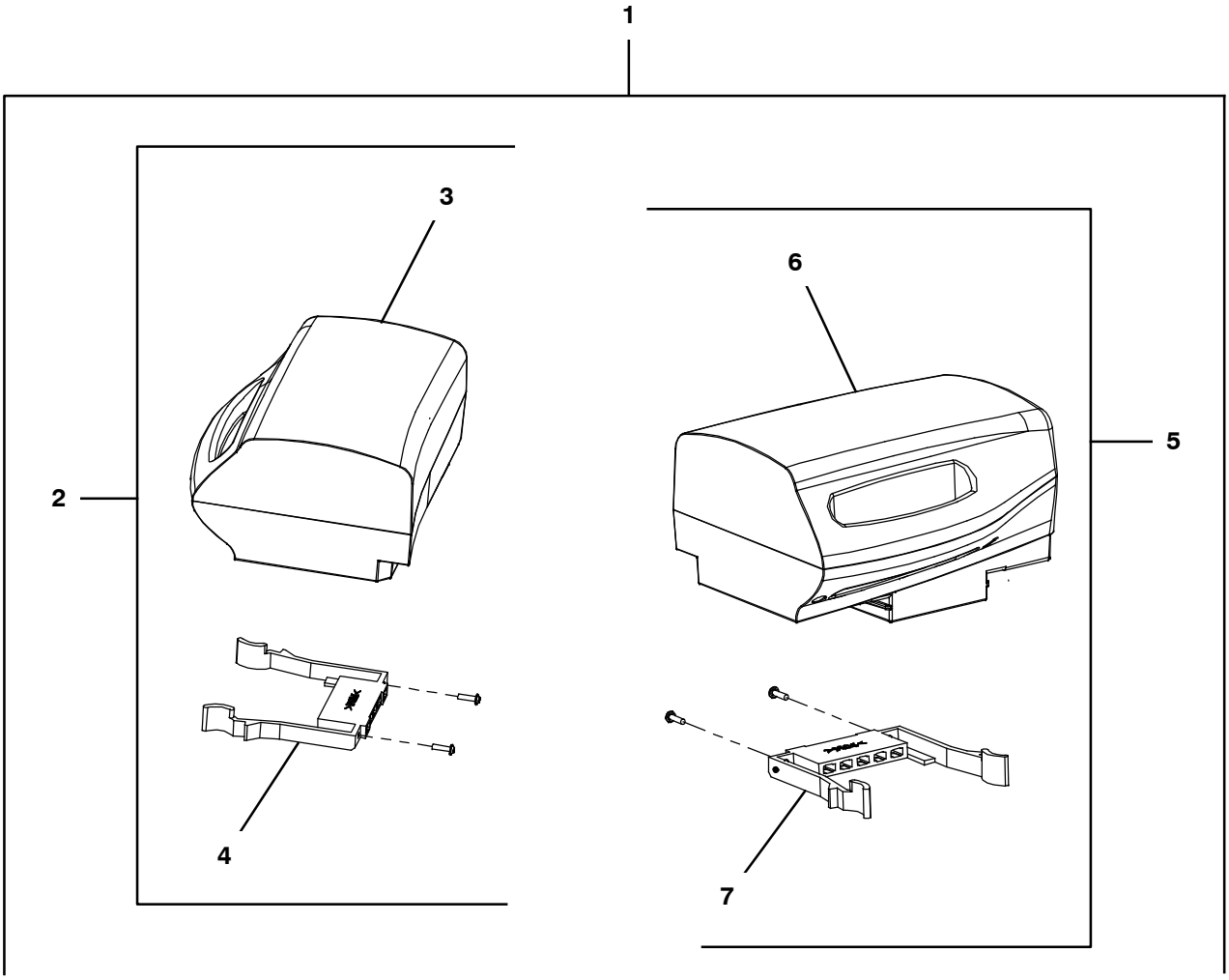

BATTERY PACK ASSEMBLY

	Ref.	Part No.	Serial Number	Description	Qty.
∇	1	1237733	(640000-)	Battery Kit, [Xxl I- Mop Left & Right]	1
▲∇	2	N/A	(640000-)	Battery, Pack, Rh [Xxl]	1
▲▲	3	N/A	(640000-)	Battery Pack Gray [Right]	1
▲▲	4	1232598	(640000-)	Connector, Bat, Fem, Rh (Color: Gray)	1
▲∇	5	N/A	(640000-)	Battery, Pack, Lh [Xxl]	1
▲▲	6	N/A	(640000-)	Battery Pack Blue [Left]	1
▲▲	7	1232545	(640000-)	Connector, Bat, Fem, Lh (Color: Blue)	1

∇ ASSEMBLY

▲ INCLUDED IN ASSEMBLY

N/A = NOT AVAILABLE SEPARATELY - MUST ORDER ASSEMBLY (∇)

BATTERY CHARGER ASSEMBLY

355935

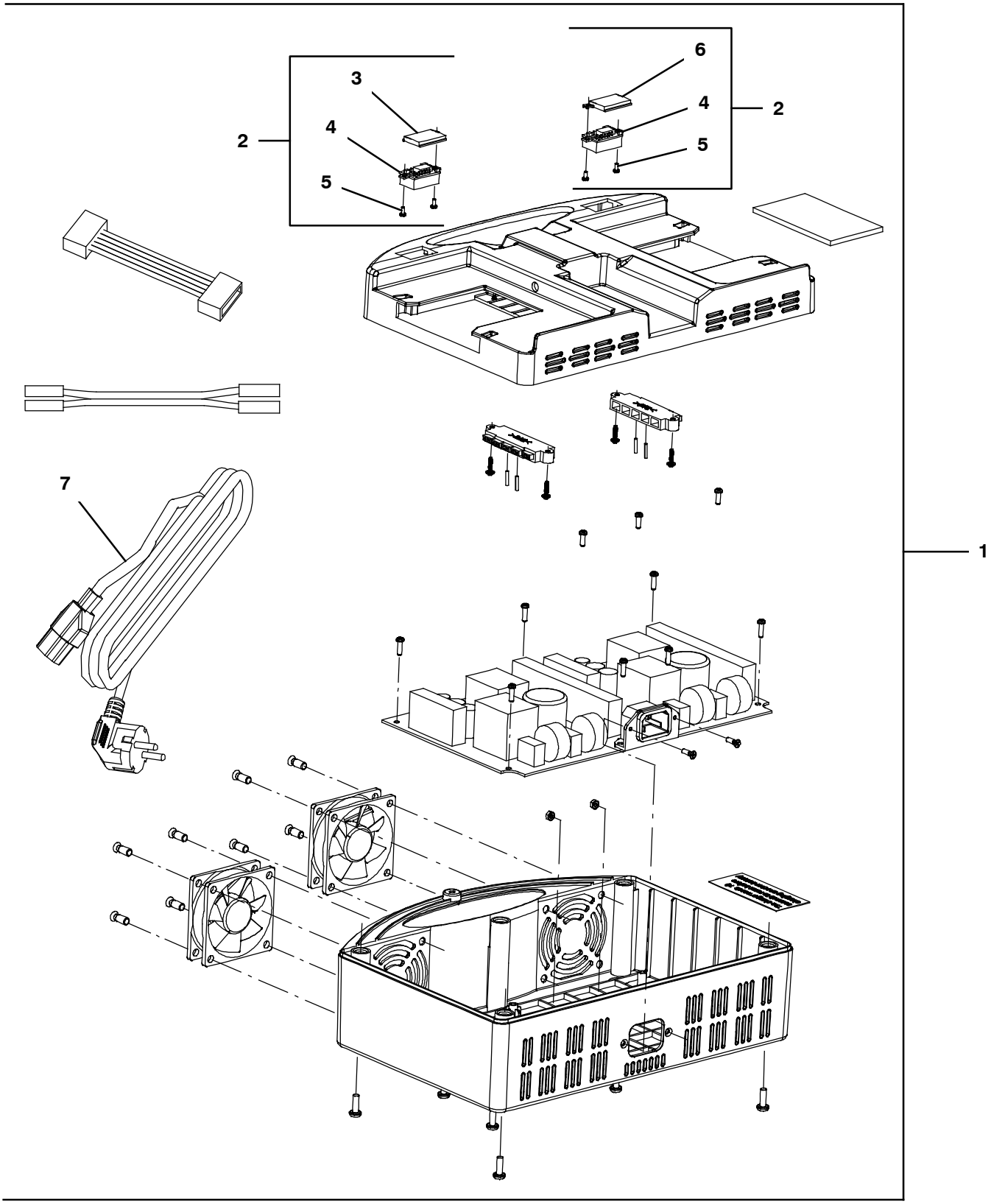

BATTERY CHARGER ASSEMBLY

	Ref.	Part No.	Serial Number	Description	Qty.
∇	1	1264257	(640000-)	Charger, Batt [+Teal Xxl Model]	1
▲∇	2	N/A	(640000-)	Light Assy, Voltage Display With Percent	1
▲▲	3	N/A	(640000-)	Transparent Cover Voltage Display Left	1
▲▲	4	N/A	(640000-)	Voltage Display Bar	2
▲▲	5	N/A	(640000-)	Screw M2x5 Cross Head Self Tapping	4
▲▲	6	N/A	(640000-)	Transparent Cover Voltage Display Right	1
▲	7	1232546	(640000-)	Cord, Power (Ul 3 Pin) (Standard)	1
	7	1233924	(640000-)	Cord, Power [Ul 3 Pin, 11 Meters Lg] (Optional)	1

∇ ASSEMBLY

▲ INCLUDED IN ASSEMBLY

N/A = NOT AVAILABLE SEPARATELY - MUST ORDER ASSEMBLY (∇)

I- BALANCE ASSEMBLY

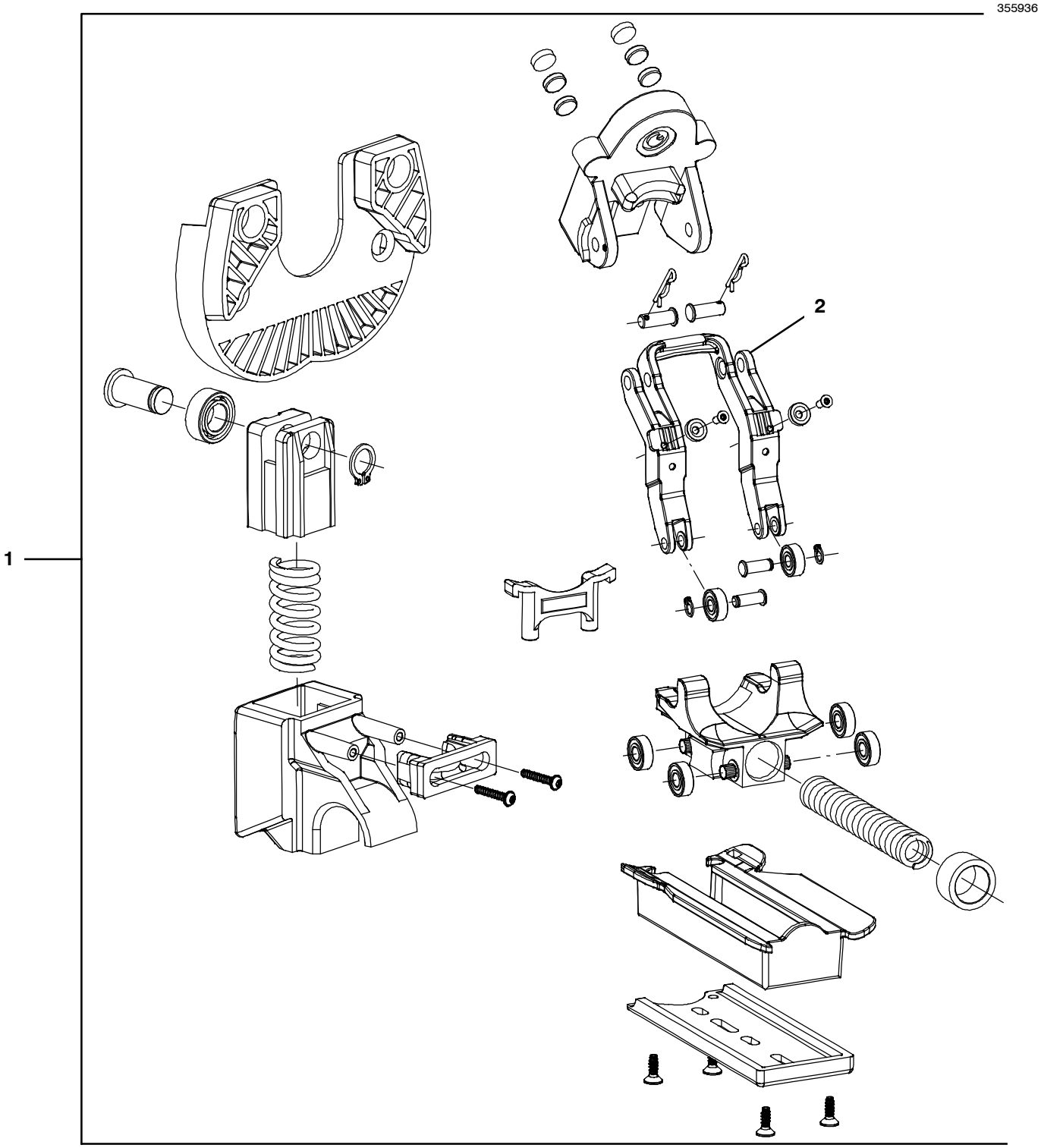

	Ref.	Part No.	Serial Number	Description	Qty.
∇	1	1266782	(640000-)	Bracket Kit [Teal I- Balance Assy I- Mop]	1
▲	2	1267112	(640000-)	Hinge, Fork, Support [I- Mop]	1

∇ ASSEMBLY

▲ INCLUDED IN ASSEMBLY

WALL CHARGERS (OPTION)

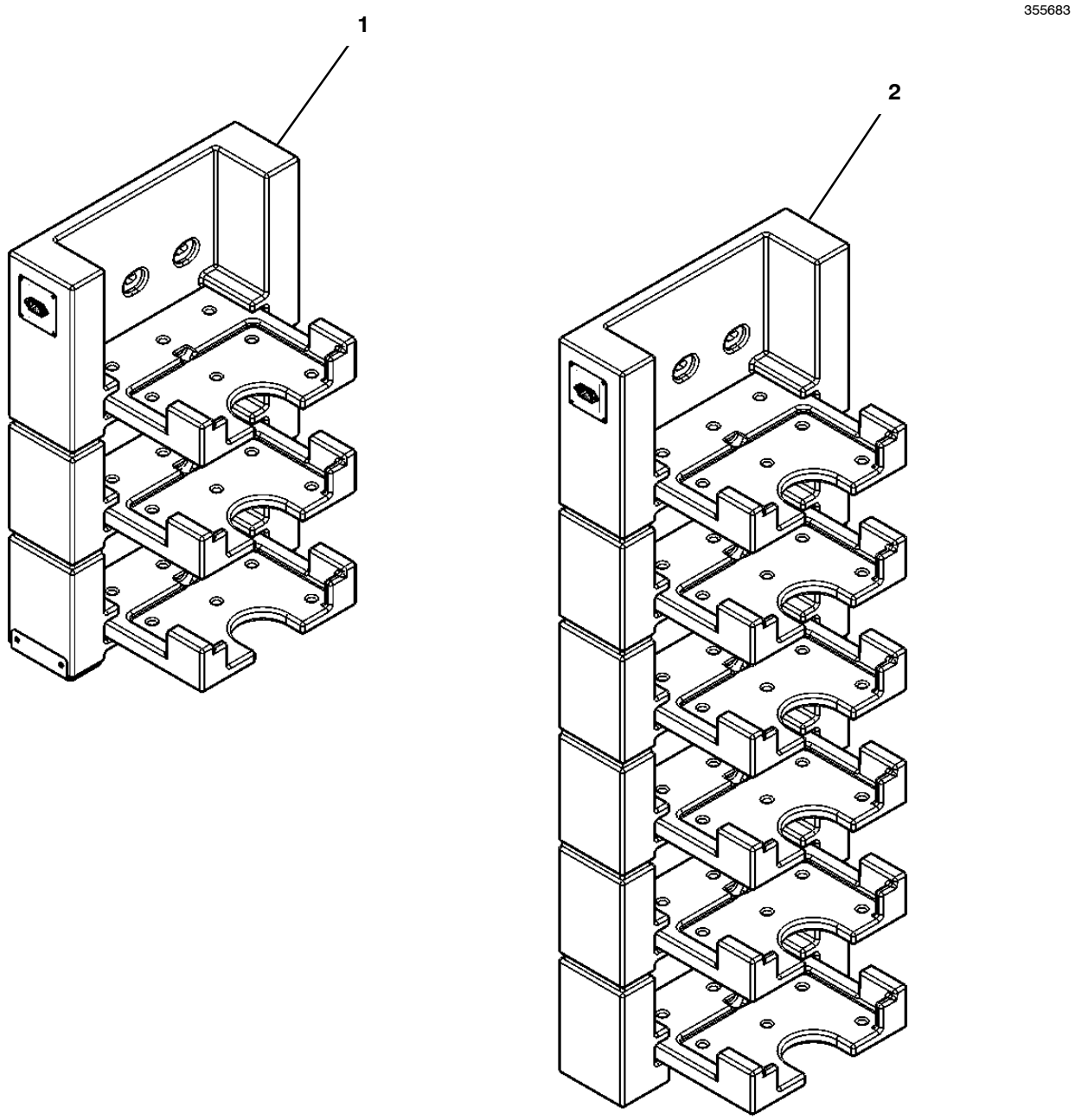

Ref.	Part No.	Serial Number	Description	Qty.
1	1232094	(640000-)	Charger, Wall [I- Mop 3 Layer]	1
2	1232058	(640000-)	Charger, Wall [I- Mop 6 Layer]	1
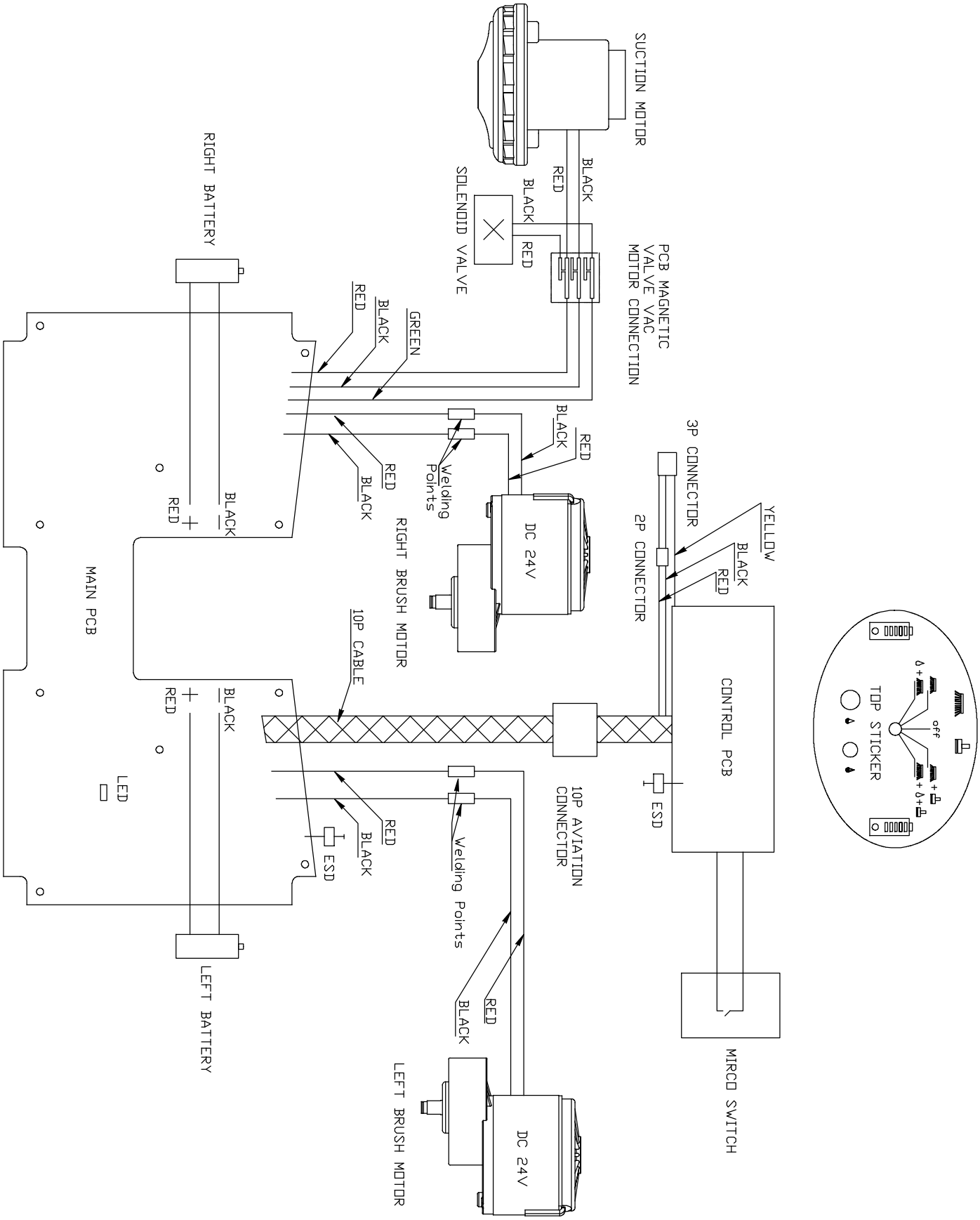
ELECTRICAL DIAGRAM