KÄRCHER

makes a difference

Translation of the Original Operating Manual
ID 130/22 Afc

Copyright

© Copyright by
Kärcher Industrial Vacuuming GmbH
Robert-Bosch-Straße 4-8
73550 Waldstetten
GERMANY

1 Safety Instructions 6
1.1 Terms 6
1.1.1 Operation 6
1.1.2 Maintenance 6
1.1.3 Qualified Staff 6
1.2 Symbols 6
1.3 General safety information 8
2 Delivery, internal transportation, unpacking 9
2.1 Delivery 9
2.2 Internal transport 9
2.2.1 Dimensions and weight 9
2.3 Unpacking 9
2.4 Packaging material 10
2.5 Storage conditions 10
2.5.1 Information for storage 10
3 Appliance description 11
3.1 Intended Use 11
3.1.1 Dust class "M" 11
3.2 Non-Intended Use 11
3.2.1 Dust class "M" 11
4 Layout and function 12
4.1 Main dimensions 12
4.2 Technical Data 12
5 Main components 13
5.1 Chart "Raw air/clean air flow" 13
6 Initiation 14
6.1 Initial commissioning 14
6.2 Connection to an extraction source (e.g. processing machine) 14
6.3 Assembly Instruction Pipes 15
6.4 Assembly Instructions Hose 15
6.5 Assembly Instruction Pipes 16
7 Operation 17
7.1 Minimum air volume flow control 17
7.2 Cleaning of the filter cartridge 17
7.3 Emptying the collection container 18
8 Troubleshooting and fault elimination 19
8.1 Safety instructions 19
8.2 Initial fault elimination measures 20
9 Maintenance/Repair 21
9.1 Maintenance regulations 21
9.2 Maintenance intervals table 21
9.3 Replacing the filter cartridge 22
9.4 Procedure when replacing the filter cartridge 22
9.5 Circuit diagram 23
10 Decommissioning, storage 24

11 Disposal 25
12 Spare Parts List 26
12.1 Components 26
12.1.1 Side view "intake socket closed" 26
12.1.2 Side view "intake socket cross-section" 27
12.1.3 Front view "filter housing, transport grip" and view "Motor, filter chamber cover" 28
12.1.4 Details of motor protection switch (main switch) 29
12.1.5 Detail differential pressure switch 29
12.1.6 Detail plug 16A (5-pin with phase inverter) 29
12.2 Illustrations Electrical filter cleaning 30
12.2.1 Parts List Electrical Filter Cleaning 32
13 EEC-Declaration of Conformity 33

1 Safety Instructions

1.1 Terms

1.1.1 Operation

includes installation, initiation (placing at disposal for usage), operation (handling, connection, disconnection, etc.)

1.1.2 Maintenance

includes control and attendance (inspections, revisions), maintenance and repair (detection of errors and their elimination).

1.1.3 Qualified Staff

are employees authorised by the person responsible for the security of the installation to carry out the operations required in each case and who are able to recognise and avoid possible dangers by reason of their training, experience and instructions as well as their knowledge of relevant norms, prescriptions, accident-prevention rules and working conditions.

1.2 Symbols

NOTICE

Denotes information that does not relate to personal injuries.
This information contains additional directions or general hints.

CAUTION

Dangerous situation, which could result in minor to moderate injury if it is not avoided.
This information must be regarded strictly to avoid damages to the installation or environment!

WARNING

Dangerous situation, which could result in serious injury or death if it is not avoided.

DANGER

Dangerous situation, which will definitely result in serious injury or death if it is not avoided.

Significance of the Operating Manual

This Operating Manual is part of the supplied product.

The Operating Manual remains valid throughout the product's lifetime, provided that no technical changes are made.

If the product is sold, the Operating Manual must be handed over to the next owner or user.

This information must be read before first commissioning.

WARNING - Read the instructions before using the machine

CE marking
The CE marking means "Communautés Européennes". It is the external symbol which states that a product fulfils the requirements imposed on the manufacturer by the European

	Community.
	Only use with safety shoes (acc. to EN ISO 20345)
	Only use with work gloves
	Respiratory protection (EN 149:2001)
	Use protective clothing (acc. to EN 13982-1)
	Use protective glasses (acc. to DIN EN 166 1349-BT)
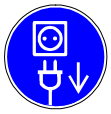	Before starting work *remove the plug from the wall socket!*
	Disconnect before starting work
	While operating electrical machines, certain parts of them are inevitable alive dangerously or under mechanical stress.
	Hand injury warning sign!
	Recycling symbol This information must be observed in order to preserve the environment!

1.3 General safety information

WARNING

While operating electrical machines, certain parts of them are inevitable alive dangerously or under mechanical stress.

- Due to their electrical and mechanical functional properties, machines can cause severe injuries and damage to property. This particularly applies in the event of incorrect use, operation or maintenance, or in the event of unauthorized interventions!
- All electrical work must be performed by a qualified electrician. All mechanical work must be carried out according to instructions (see Maintenance / Repair). The device may be operated only by qualified personnel who have read and understood the operating instructions.
- The operator must be provided with information, instructions and training on the materials to be absorbed, including a secure procedure for removal of the absorbed material, before use.
- All notes and data on the machines must be observed!
- Faultless and safe use of this machine includes correct transport and storage, as well as operation in accordance with regulations and careful maintenance!
- This device is not intended for being used by persons (including) with limited physical, sensory or mental skills or lack of experience and/or lack of knowledge except if they are supervised by a person responsible for their safety or were instructed in how to use the device by this person. Children should be supervised to ensure that they do not play with the device.
- Operation of the device is only permitted on underground sloping no more than 10° and with sufficient load-bearing capacity.

CAUTION

Only use with safety shoes (acc. to EN ISO 20345)

- Do not place any limbs between parts to be joined during assembly of the machine parts. When moving the parts, pull limbs from tightening spaces in time.
- Make sure that the power supply cord is not damaged by being run over, crushed, tugged etc.. Stop the industrial vacuum cleaner immediately if necessary!
- The power supply cord must be regularly inspected for signs of damage or ageing!
- Connectors of power supply cords must at least be splash-proof!
- Starting without a filter or with a damaged filter is not allowed
- The suction device must not be operated if wear is detected on fasteners or mounting brackets. Please arrange for a service immediately, or send the industrial vacuum cleaner for repair to:

Kärcher Industrial Vacuuming GmbH
Abt. Service
Robert-Bosch-Straße 4-8
73550 Waldstetten
Tel: +49(0)7171-94888-523

2 Delivery, internal transportation, unpacking

2.1 Delivery

Unload the scope of delivery on level ground with sufficiently sized industrial trucks.

2.2 Internal transport

Transport scope of supply to the site of setup secured against movement or tipping with a sufficiently sized industrial truck.

2.2.1 Dimensions and weight

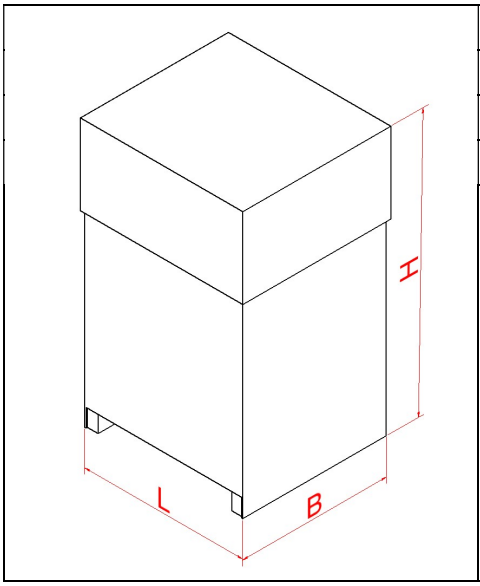

	Packing
L (mm)	1200
B (mm)	800
H (mm)	1700
Weight incl. packing (kg)	180

2.3 Unpacking

Make sure that no components are left in the packaging.
Scope of delivery: -Suction device
-Technical Manual

NOTICE

The suction unit of Kärcher Industrial Vacuuming GmbH is delivered installed on a pallet. If the device is to be lifted from the pallet with a forklift, however, the dust container must be taken away first to avoid damage to it.

2.4 Packaging material

The packaging materials must be disposed of in accordance with the valid legal requirements.

Correct disposal of this product (electrical waste) (applicable in the countries of the European Union and other European countries with a separate collection system)
The identification on the product and on the associated literature states that it must not be disposed of along with normal domestic waste at the end of its service life. Please dispose of this device separately from other waste, in order to prevent damage to the environment or to human health through uncontrolled waste disposal. Please recycle this device, in order to promote sustainable re-use of material resources. Private users should contact the dealer from whom they purchased the product or the competent authorities, in order to find out how they can recycle the device in an environmentally-
friendly manner. Commercial users should contact their supplier. This product must not be disposed of along with other commercial waste.

Recycling symbol
This information must be observed in order to preserve the environment!

2.5 Storage conditions

2.5.1 Information for storage

Should the industrial exhauster not be operated for a longer period of time, so it has to be stored in dry, dust and vibrationless rooms.
Temperature T: -10…+40°C
Humidity: max. 85%

3 Appliance description

3.1 Intended Use

NOTICE

- This device, which has been delivered ready for operation, is designed as a *dry vacuum cleaner* for commercial and industrial applications e.g. in hotels, schools, hospitals, factories, shops, offices and rent transactions. It is particularly suitable for vacuuming up *dust.*
- Dedusting units are suitable for connection to dust-generating machines.
- Caution! This device is only meant for dry application and must not be used or stored outdoors under wet conditions!
- The machine may only be operated when all filters installed correctly and undamaged.

WARNING

3.1.1 Dust class "M"

Observe warning sign on the device!

- Dust class **"M" contains** dust class **"L".**
- The device is suitable for dusts hazardous to health and not flammable with workplace limit **≥0.1mg/m³** according to **dust class M** (max. permeability <0.1%) according to DIN EN 60335-2-69 Annex AA:2010.

3.2 Non-Intended Use

NOTICE

- For all personal injuries and material damages, which are caused by a not -asdirected- use, the operator and not the manufacturer of the machine is responsible for !
- May not be used outdoors!

WARNING

- This device is **not suitable** for taking up and extracting **combustible dusts.**
- This device is **not suitable** for taking up and extracting **flammable liquids (flammable, highly flammable, highly flammable hazardous substances according to Directive 67/548/EEC)** (Flash Point under 55°C) as well as **mixtures of combustible dusts with flammable liquids.**
- The vacuum cleaner is *not* approved for operation in potentially explosive areas!

DANGER

- With improper use may cause explosion and fire!

3.2.1 Dust class "M"

Observe warning sign on the device!

- The device is **not suitable** for **dust class H**.
- The device is **not suitable** for **carcinogenic hazardous substances** purs. to **GefStoffV §10, TRGS 905 or TRGS 906.**
- The device is **not suitable** for **asbestos** pursuant to **TRGS 519**.

NOTICE

A device of build 22 is needed to extract flammable dust!

4 Layout and function

4.1 Main dimensions

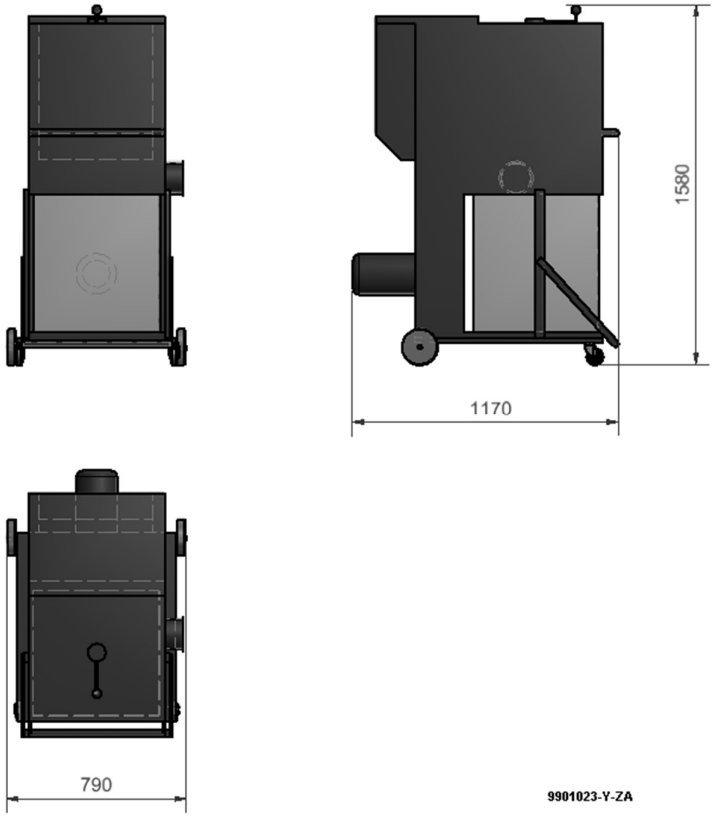

4.2 Technical Data

Technical Data	Unit	50 Hz	60 Hz
Voltage	[V]	Δ230 Y400	Δ265 Y460
Frequency	[kW]	2,2	2,55
Protection type		IP 55	
Power intake	[A]	Δ7,6 Y4,3	Y4,4
Air displacement volume	[m³/h]	1600	
Vacuum	[mbar]	35	
Noise level	[dB(A)]	72	74
Weight	[kg]	approx. 150	
Efficiency	IE3	86,1% cosφ0,85	86,5% cosφ0,85

5 Main components

5.1 Chart "Raw air/clean air flow"

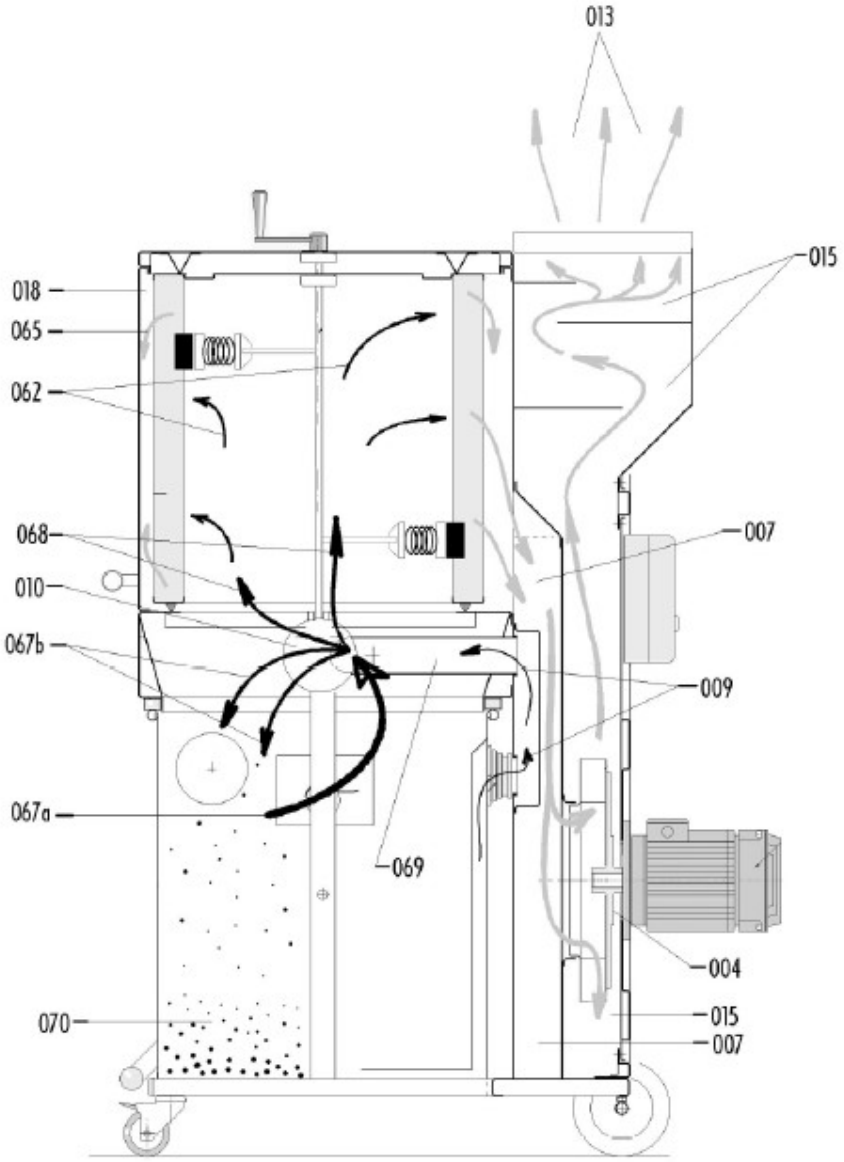

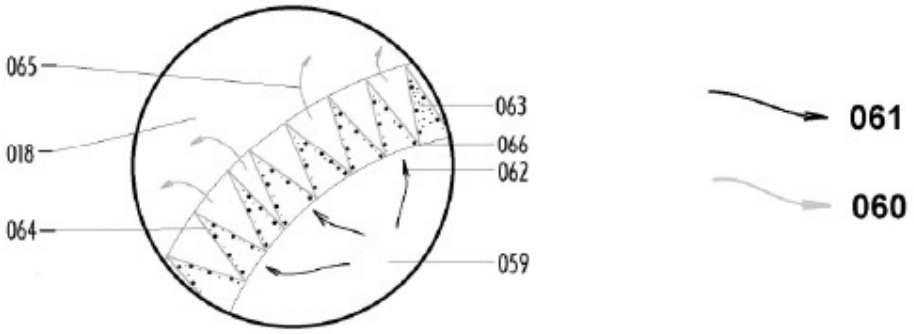

6 Initiation

CAUTION

6.1 Initial commissioning

Attention:

- Have electrical work performed by an electrician!
- Set up the device at a regular room temperature, in the dry, on a level area, not outdoors! Latch the two casters.
- Before commissioning, ensure that the device is assigned enough standing space with the corresponding safety distance for work and maintenance.
- Testing: The operating voltage of the device is equal to that of the grid. Only then plug in the mains plug.
- The main switch on the control box serves switching on and off. Red pushbutton pushed (switch position=0), then the deduster is off. Green pushbutton pushed (switch position=1), then the deduster is on.

Attention:

- **Check motor rotating direction before commissioning!** For direction indication, see ***red arrow*** (motor housing). If the rotating direction is incorrect, reverse polarity of the device in the mains plug with the included phase inverter. Turning the pins integrated in the insulation part of the plug with a screwdriver changes the rotating direction of the fan drive. The wrong rotating direction causes overheating, lower air volume flow and a lower extraction output.
  - Only plug plug No. 157b of the gear motor into socket No. 158 after checking the direction of rotation!!
    Incorrect direction of rotation will damage both the cleaning linkage with rubber wiper and the filter cartridge!!

WARNING

The machine must only be operated in TN grids with earthed neutral conductor!

6.2 Connection to an extraction source (e.g. processing machine)

- Before connecting the device to the processing machine, a function test must be performed according to the later monthly inspection.
- The device must be firmly connected to the extraction source with a hose/pipe system (processing machine).
- When connecting an extraction hose, ensure that only electrically conductive hoses are used and that the electrical connection between the hose and socket is impeccable. If a "spiral hose" is used, the metal spiral must be stripped and pushed against the wall of the extraction socket with a pipe clamp after pushing on the hose (earthing option).
- After connection of the extraction hose (and poss. the accessories) to the processing machine, the deduster is started up first → Push the green pushbutton at the main switch **(switch position 1)**, then switch on the processing machine.
- When switching off, observe the reverse order. First switch off the processing machine, then push the red pushbutton at the main switch of the deduster only **(switch position 0)** (switch off).
- Generally, additional hose length and accessories always mean additional pressure loss. The best working conditions are present when a dust/chip source is connected to the suction device directly by the shortest possible hose connection!
- During operation, the site of the machine must not be changed!

6.3 Assembly Instruction Pipes

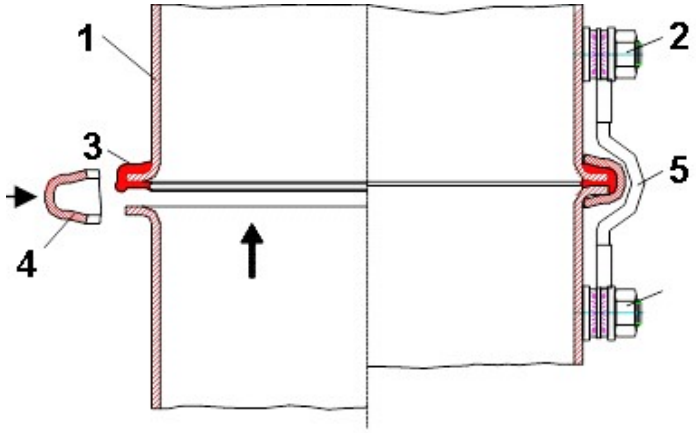

Item	Description
1	Pipes
2	Earthing point
3	Knurled sealing ring
4	Clamp ring
5	Earthing strand 6mm²

6.4 Assembly Instructions Hose

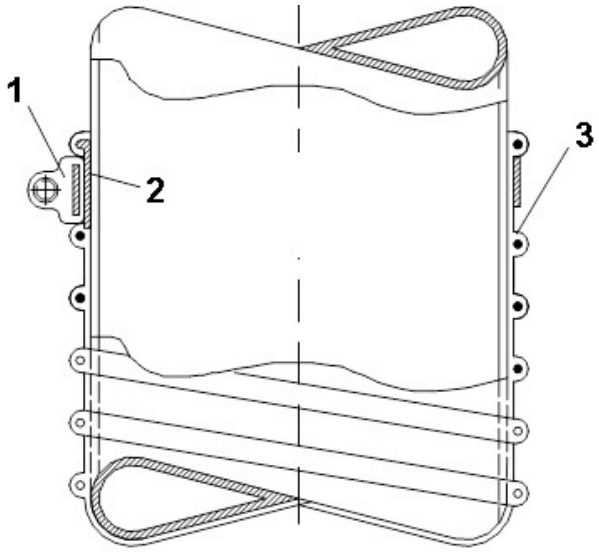

Item	Description
1	Hose clamp
2	Wire spiral, bent, contact with blank steel tube
3	Spiral hose, type "D"

NOTICE

6.5 Assembly Instruction Pipes

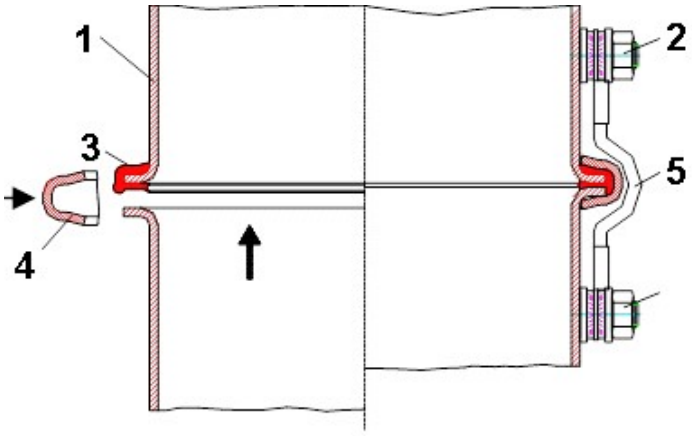

When using EPDM seals, it is sufficient if the paint is removed from both sides of the flange for each pipe. This ensures continuous grounding of the pipeline.

7 Operation

7.1 Minimum air volume flow control

Observe that the extracting air volume flow does not undercut a minimum value. The monitoring facility must be adjusted with the differential pressure switch to this respective minimum volume flow depending on the extraction socket cross-section of the processing machine.

The new setting/change of the differential pressure switch must only be performed by an instructed person.

The device is switched off first. On the transparent plastic cover of the differential pressure switch, you can select the desired vacuum from the outside with an adjustment tool (hexagon socket wrench, size 6). The desired value is to be assigned to the white triangular mark. The device is ready for operation again and adjusted to the new required minimum air volume flow.

The following table shows the values for the setting work to be performed:

Extraction socket cross-section q (cm^2)	Socket Ø (mm)	Minimum air volume flow V min. (m^3/h)	Setting value on the scale P (Pa)
< 50,3	**80**	362	3260
< 78,6	**100**	565	3110
< 113,0	**120**	813	2740
< 154,0	**140**	1100	2460

7.2 Cleaning of the filter cartridge

The more tightly the deposits on the cartridge surface become, the less air will flow through the cartridges and the air volume flow will reduce.
Practically, the minimum air volume flow was defined at 20 m/s. The minimum air volume flow is monitored via the differential pressure switch.

If the lower limit (minimum air volume flow) is reached, the *yellow warning lamp* will light up. The device *must be cleaned*.

The filter cartridges are always cleaned automatically when the PROFI is switched off with button 162 (fan stop).

The cleaning shaft with the two wipers is then turned clockwise 5 x 360°.

During operation, the filter cartridge can also be motorized by operating switch No. 165 (switch position to the right).

Attention!

Incorrect direction of rotation of the gear motor (counterclockwise) will damage both the cleaning linkage with rubber wiper and the filter cartridge !!

CAUTION

7.3 Emptying the collection container

The dust/chip bag in the container must be emptied when the maximum fill height is reached - see inspection through the sight window - and always after daily use of the deduster. Chip and dust deposits to the upper edge of the container's sight window mean: "Fill level for medium deposit" reached, best work operation no longer ensured.

It is recommended to replace the dust/chip bag with a new one at once:

- Fasten the two latchable running rollers of the deduster.
- The two running rollers must not point inwards when shunting the container; otherwise, the container cannot be moved properly.
- The device must be switched off and the mains plug must be removed.
- By pushing up the grip of the lifting and lowering device of the container (remains on top by the latching device), the container is disconnected from the filter chamber and moved down to the bottom with the lifting and lowering device.
- The dust/chip bag must be closed carefully.
- Removal of the dust/chip bag from the collection container may take place "on site" or at an internal disposal point. Disposal must take place professionally and according to the local provisions!
- When inserting a new dust/chip bag, ensure that it is smoothly applied to the walls of the container and throwing as few folds at the upper edge as possible.
- Push up the part of the dust/chip bag that protrudes over the container until the two container holders and the rubber sealing sleeve (connection between vacuum line of the container and the filter chamber/raw air side) are free.
- Push the container to the holding device and carefully push down the grip of the lifting and lowering device all the way.
- The rubber seal at the upper edge of the container must be pushed against the filter chamber air-tight.
- Then the RE 120 is ready again.

CAUTION

- Generally observe that the air volume flow is not interrupted at a newly inserted dust/chip bag or a dust/chip bag that has not collected any dust/chips yet, when switching on the deduster. This would be the case, e.g. if the hose was completely clogged or if all pushers were closed at a branch or a Y-piece. The consequence would be that the dust/chip bag would be sucked into the filter cartridge through the large vacuum (ΔPmax at air volume flow 0 m/s) at once after activation.
- If the empty filter bag is sucked into the filter cartridge (e.g. by the above situation), a new filter bag must be inserted since it cannot be excluded that the dust/chip bag was damaged.

8 Troubleshooting and fault elimination

8.1 Safety instructions

WARNING

- Before starting any work on the industrial vacuum cleaner, but particularly before opening covers of live or moving parts, the industrial vacuum cleaner or system must be correctly disconnected from the mains and the drive unit must have stopped
- The measures specified below may only be withdrawn when the industrial vacuum cleaner is completely reassembled and the maintenance is concluded.
- The usual **safety regulations** are, for example, in accordance with **VDE 0105**:
  - Disconnect from mains
  - Provide a safeguard to prevent unintentional restarting
  - Check that the equipment is not live
  - Cover or shield adjacent live parts.

8.2 Initial fault elimination measures

NOTICE

All the errors mentioned in the table below may be eliminated by yourself. In case of major problems or other failures please contact the customer service
of Kärcher Industrial Vacuuming GmbH immediately. Tel. +49(0)7171-94888-0
Perform maintenance tasks in accordance with the description in the Maintenance/Servicing chapter

Interference	Possible cause	Remedy
Motor is not running	Mains connection line is not plugged in.	Plug in plug.
	Motor protection switch tripped	Switch on motor protection switch.
	Pre-fuse defective	Replace 16 A slow-acting fuse
	Cable break	Replace mains connection line
Extraction output too low	Filter cake too large	clean
	Container overfilled	Replace dust/chip bag
	Vacuum line Container / raw air space clogged	Check permeability, if applicable, remove contamination
	Chip bag is sucked in	Check rubber seal of filter chamber / container and repair if required
	Rotary direction incorrect	Reverse plug polarity
	Filter cartridge clogged	Check cleaning process, replace cartridge if required
Dust penetration in the clean air area	Filter cartridge worn or damaged	Insert new filter cartridge at once!!!
	Tight fit of the filter cartridge no longer ensured	Tighten clamping screws
	Seal of cleaning shaft/filter cartridge defective	Replace seal
Increase of volume	Wrong rotating direction of the fan	Reverse polarity of CEE plug
	Component(s) have come loose	Check tight fit of all machine parts

9 Maintenance/Repair

Before starting work *remove the plug from the wall socket!*

9.1 Maintenance regulations

NOTICE

- Careful and periodical inspections and maintenance works are necessary to enable an early detection and elimination of possible errors before they cause bigger problems and damages.
- Kärcher Industrial Vacuuming GmbH assumes liability and guarantee only in case of proper use and compliance with the following maintenance instructions.

Suitable work gloves must *always* be worn when carrying out maintenance and service tasks, in order to prevent injuries and soiling with contaminated substances

WARNING

- These works may only be carried out by an electrician.
- When replacing or repairs the facility all earth conductors are connected again!

9.2 Maintenance intervals table

Interval (for 1-shift operation)	Check	Maintenance work
Daily	Device or parts of it for damage	visual inspection
	Cable connection for damage	visual inspection
	Is there a dust/chip bag in the container?	visual inspection
Monthly	Minimum volume control (yellow warning lamp)	Function test
	Can leaks be found at the filter (dust vanes)	Safety inspection
Annual	Filter cartridge	Replace filter cartridge on demand
	Bearing of the suction turbine	Replace bearing on demand
	Visual inspection whether there is any dust deposited in the fan room; remove dust if required.	

9.3 Replacing the filter cartridge

After an extended operating time, the filter cartridge must be replaced with a new one.The reason for this is the fact that the pores of the filter material will clog slowly over time and can no longer be cleaned. The filter cartridge must be replaced when the cleaning intervals are growing disproportionately short. The rated air volume flow for drive mode is no longer warranted.If the visual inspection in the clean air area of the device leads to dust penetration (dust vane), this means that the wear threshold of the filter cartridge has been reached and that replacement is also mandatory.

WARNING

- At the work it is absolutely necessary to wear personal protection equipment (single-way suits, protecting mask and protective goggles)!
- While carrying out this work, an endangering of other persons must be ruled out!

9.4 Procedure when replacing the filter cartridge

- Switch off the device and disconnect it from the mains!
- Fasten the two latchable casters of the deduster.
- Remove the manual cleaning crank.
- Turn out the 8 screws M6 of the filter chamber cover and remove the cover.
- Remove the earthing cable from the lid of the filter cartridge.
- The filter cartridge is fastened with 3 centring mandrels. Pull out the filter cartridge via the cleaning shaft by slight canting to overcome the resistance produced inside the filter cartridge with the 2 wipers.

The new filter cartridge is inserted in the reverse order.

Comments:

- Please observe that the felt seal attached to the crank is not damaged.
- First slightly loosen the 8 screws "crosswise", and then screw open all the way. When screwing shut, also screw on the screws "crosswise", then screw in opposing screws tightly!
- Removal of the old and installation of the new filter cartridge should only be performed by qualified and instructed staff.
- Visually inspect when replacing the filter chapter. In particular, observe possible dust vanes or other damage to the cleaning shaft, rubber wipers, etc.
- The support face for the filter cartridge rubber seal must be cleaned thoroughly especially before installation of the cartridge to prevent possible leaks.
- Dispose of the filter cartridge in a container that can be closed (e.g. plastic bag) under observation of the already-described safety provisions and according to the local rules. Observe that a particle filter mask P2 must be worn for the above work.

NOTICE

The vacuum line of the container to the filter chamber/raw air area of the device must be inspected for clogging at each replacement of the dust/chip bag. Clogging of the vacuum line will lead to the dust/chip bag being sucked into the inner area of the filter cartridge and thus to strong reduction of the volume flow or interruption of the extraction function.

9.5 Circuit diagram

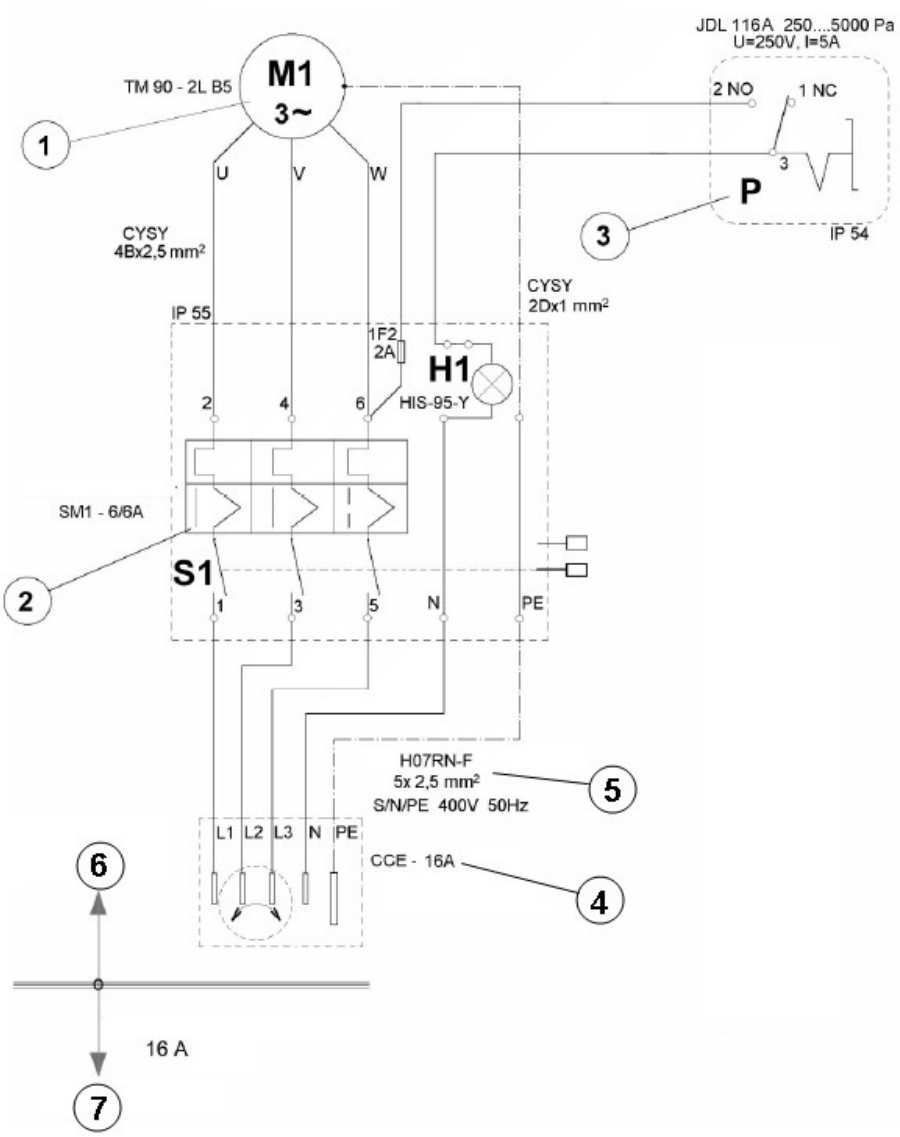

No.	Dwg.	Description	Manufacturer
1	M1	Asynchronous. Motor TM90–2L, B5.3~50Hz, 400V, 2.2kW, 2800 rpm, 4.6A, IP 54	EMP
2	S1	Motor protection switch and main switch SM1 – 6, 690V, 3~50Hz, 4-6A, IP 55	OEZ
3	P	Differential pressure switch JDL 116A, 250…5000 Pa, U=250V AC, I=5A, IP54	ALRE
4	H1	Yellow lamp, HIS-95-Y, 230V AC, IP 54	OEZ
5		Rubber cable H07RN-F, 5x 2.5mm², S/N/PE, 400V, 50Hz	
6		Dedusting system RE 120	
7		Customer, pre-fuse on site: 16 A slow-acting	

10 Decommissioning, storage

WARNING

- Switch the device off and remove the mains plug from the mains socket.
- Roll up the connection cable.
- Empty the collecting tank, in accordance with the instructions in the chapter "Operation, Control".
- Cleaning of the device as specified in the chapter “Maintenance, Repair".
- When vacuuming up aggressive substances, rinse out the tank with clean water.
- Store the device in a dry place and out of reach of unauthorized personnel.
- "ATTENTION" - This product should be kept indoors only!

11 Disposal

WARNING

- Note preceding chapter "Decommissioning, Storage"!
- The filter inserts must be disposed of separately in accordance with environmental standards, depending on the medium vacuumed up.

Dispose of the device in accordance with the valid legal regulations.

Correct disposal of this product (electrical waste) (applicable in the countries of the European Union and other European countries with a separate collection system)
The identification on the product and on the associated literature states that it must not be disposed of along with normal domestic waste at the end of its service life. Please dispose of this device separately from other waste, in order to prevent damage to the environment or to human health through uncontrolled waste disposal. This product must not be disposed of along with other commercial waste.

12 Spare Parts List

12.1 Components

12.1.1 Side view "intake socket closed"

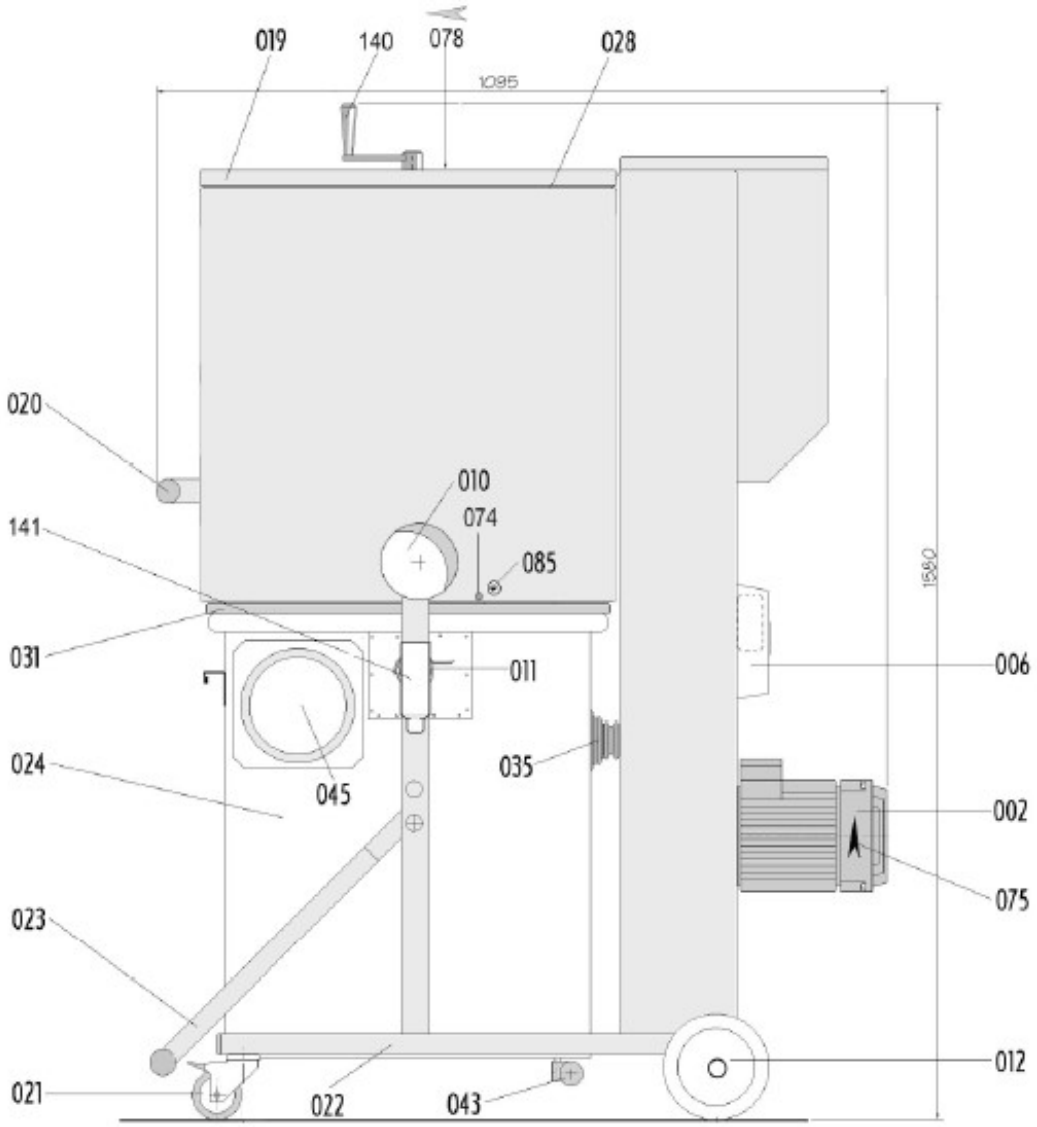

12.1.2 Side view "intake socket cross-section"

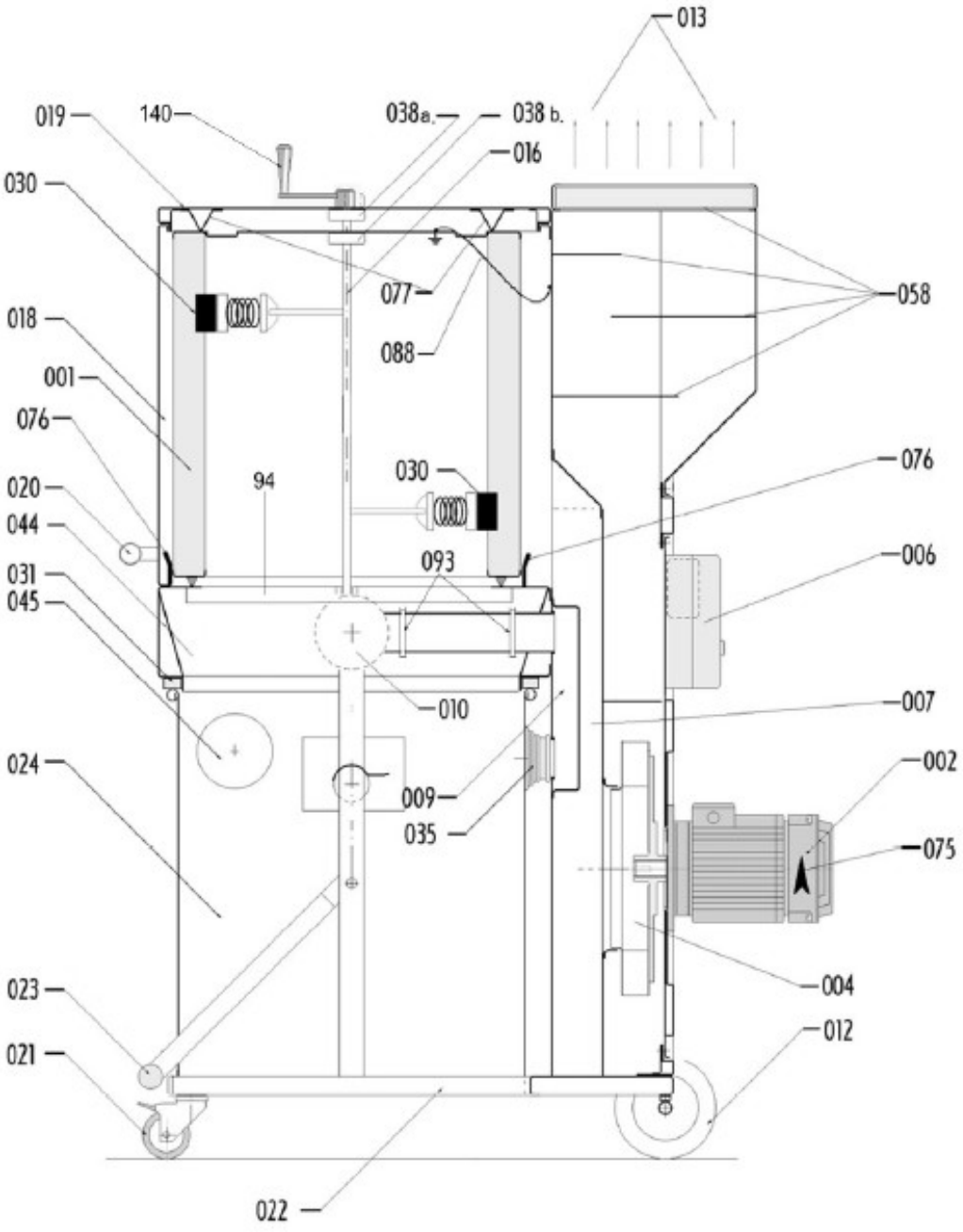

12.1.3 Front view "filter housing, transport grip" and view "Motor, filter chamber cover"

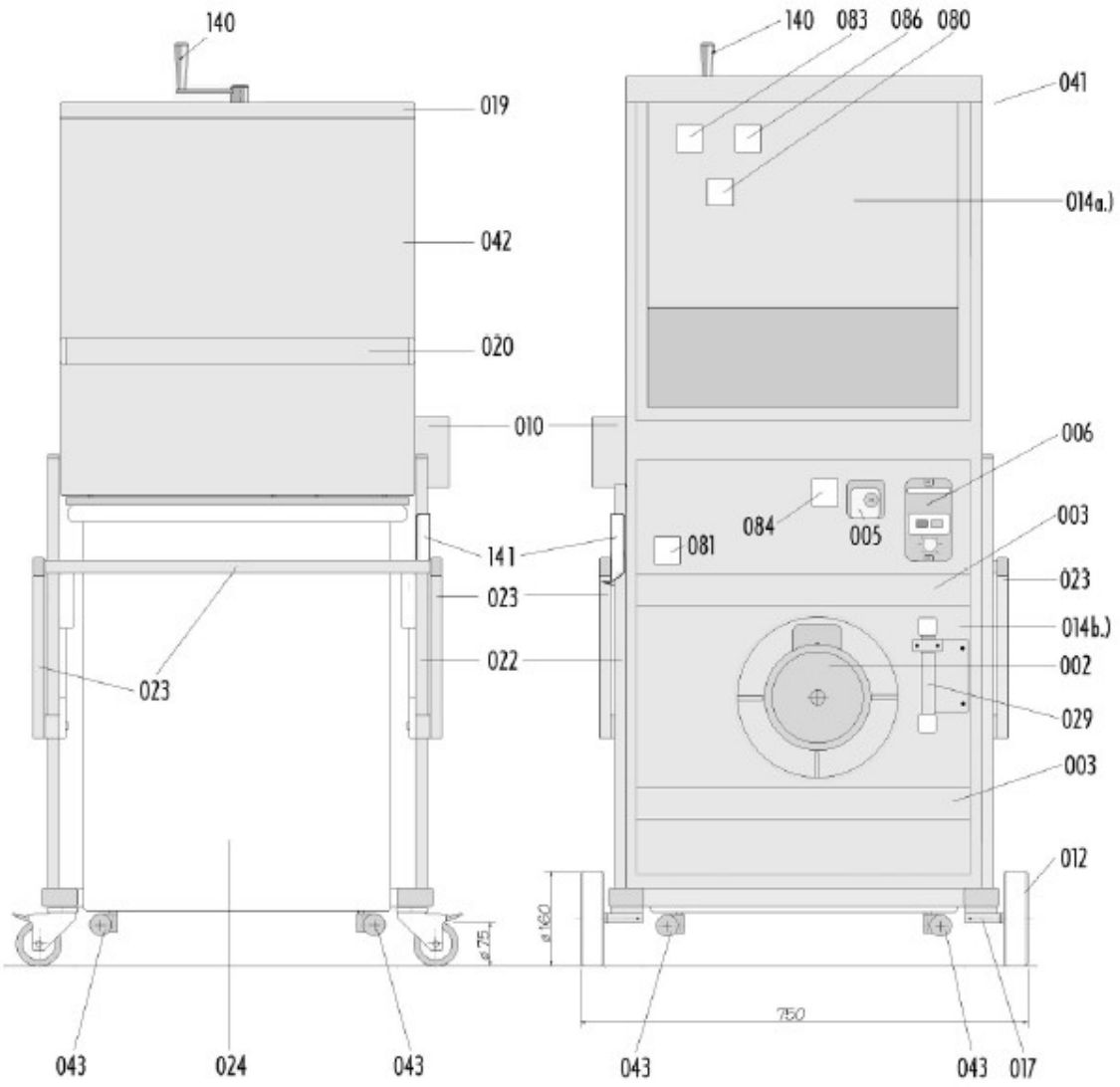

12.1.4 Details of motor protection switch (main switch)

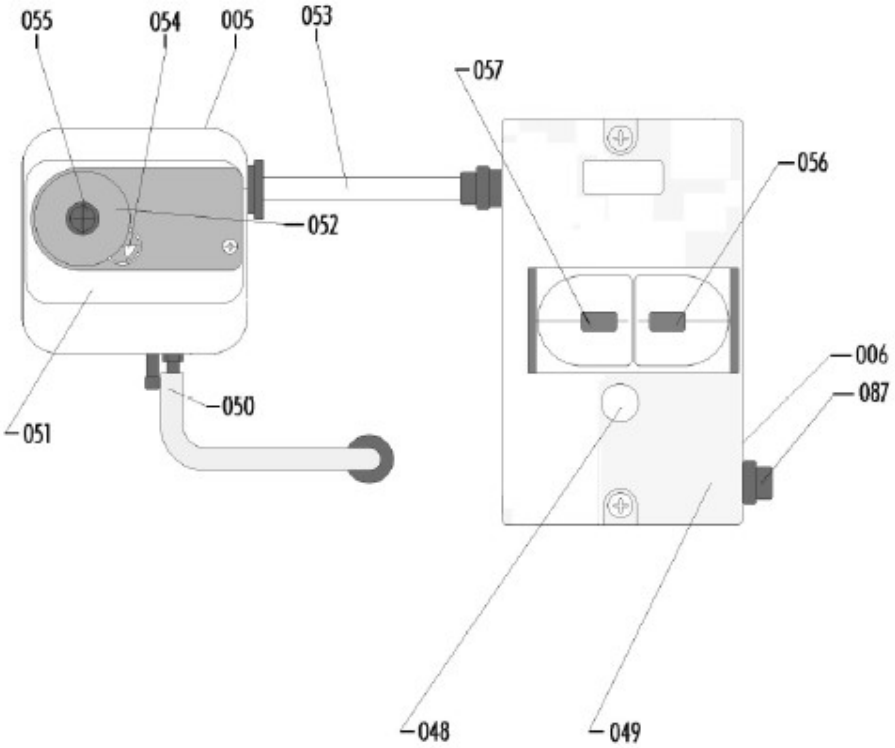

12.1.5 Detail differential pressure switch

12.1.6 Detail plug 16A (5-pin with phase inverter)

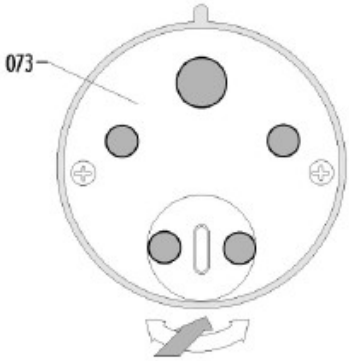

Item	Qty.	Unit	Component number	Version	DESIGNATION
001	1	Piece	0350308		Filter cartridge, M, 9m²
002	1	Piece	0400121		Electrical motor FDR 90-L 2.2 kW
005	1	Piece	0040583		Differential pressure switch DDS, JDL 116A ,
006	1	Piece	0040584		Motor protection switch SM1-6 6A,
012	1	Piece	0220101		Roller, D160
021	1	Piece	0220099		Guide roller, latching, D75B
024	1	Piece	1100401		Special container RE120
028	1	Piece	0501003		Rubber seal 20x3mm, 3m long
030	1	Piece	0450192		Rubber wiper for filter cleaning
031	1	Piece	0451031		Rubber sealing, 20x16 mm, 580x580, L=2,4 m
035	1	Piece	0450168		Rubber sealing sleeve
037	1	Piece	1040585		Mains connection line 5x2.5², 5m, with plug 16A (5-pin with phase inverter)
038	1	Piece	0090123		Simmerring 12x27x7 with aluminium holder
043	1	Piece	2220022		Container running roller, ø75
048	1	Piece	0040586		Signal lamp yellow
073	1	Piece	0040587		Plug 16A (5-pin with phase inverter)
087	1	Piece	0040588		Fuse 1F2 (2A) with insert
093	1	Piece	2600524		Hose clamp for pos.69
	10	Piece	0630253		PE disposable bag 1200x1000x0.1
	1	Piece	0050001		Hose clamp 50-70mm
	1		0451031		Rubber seal housing opening to container
	2		0450023 Yard goods		Seal, seat of filter cartridge at the bottom (is glued on with Pattex)
140	1		0501000		Hand cleaning crank for RE 115 / RE 120

12.2 Illustrations Electrical filter cleaning

156
165
162
2
167
37

157
171
161
159

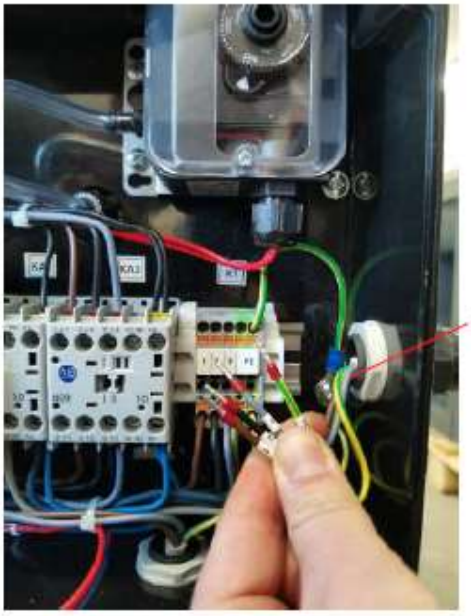
157

X1

CAUTION

First check the correct rotating direction of the fan electro motor, then plug cable (no. 157) from the gear motor into the terminal block X1.

Before commissioning, check the rotating direction of the fan motor!
- For direction indication, see red arrow on the motor housing!
- Swap polarity of the phases in the mains plug if the rotating direction is incorrect.

Make sure that the rotating direction of the fan motor is correct before plugging in the gear motor cable.
Connect the gear motor cable in the control cabinet to terminal block X1.
Position X1 – 1…..brown
Position X1 – 2…..black
Position X1 – 3…..grey
Position X1 – PE…..PE (earthing)

12.2.1 Parts List Electrical Filter Cleaning

Item	Qty.	Unit	Component number	Version	DESIGNATION
2	1	Piece	-		Electro motor TM 90-2L;B5 2.2 kW for fan
37	1	Piece			Mains connection line 5x2.5 mm², length 5 m with plug 16A (5-pin with phase inverter)
150	1	Piece			Gear motor for filter cartridge cleaning, type: 1LA 7063-4, 400 V, 180 W
151	1	Piece			Protective covering
152	1	Piece			Hub with U-profile
153	1	Piece			Attachment for the cleaning shaft
154	1	Piece			Bracket of gear motor attachment
155	1	Piece			Screw gear
156	1	Piece			Electronics box
157	1	Piece			a) Cables of gear motor no. 150 400 V
159	1	Piece			Warning note: First check the correct rotating direction no. 75 of the fan electro motor no. 2, then plug cable no. 157 from the gear motor into the terminal block X1
161	1	Piece			Warning lamp yellow: Filter condition
162	1	Piece			Switch: Fan off
165	1	Piece			Selection switch: Manual cleaning of the switch position to the right = cleaning in actuation
167	1	Piece			Main switch
169 170	6	Piece			Screw M6 x 16
171	1	Piece			H1 green lamp: Grid
174	1	Piece			Display rotating direction gear motor

13 EEC-Declaration of Conformity

EC Declaration of Conformity in accordance with the Machinery Directive 2006/42/EC Appendix II 1A

The product described below:

This declaration shall cease to be valid if the machine is modified without our prior approval.

Designation: Deduster
Type: ID 130/22 Afc
Serial number: 99854100
Year of build: 01.2024

produced by:	**Kärcher Industrial Vacuuming GmbH** **Robert-Bosch-Straße 4-8** **D 73550 Waldstetten**	**Person authorized for the compilation of technical documents**
	Tel: +49(0)7171-94888-0 Fax: +49(0)7171-94888-28 e-mail: info.iv@de.kaercher.com	Alexander Haag Dept.: Design/Construction Robert-Bosch-Straße 4-8 D 73550 Waldstetten

complies with the following EC directives:

EC Directive (2006/42/EC)
EMC Directive (2014/30/EG)
EC Directive (2011/65/EU, RoHs)

The following harmonized standards were applied:

EN ISO 12100:2010	Safety of machinery - General principles for design - Risk assessment and risk reduction
EN 60204-1	Safety of machinery; Electrical equipment of machines, part 1: General requirements

Waldstetten, 18.01.2024

M. Pfister
(Managing Director)