R14

Dual Technology Rider Carpet Cleaner

Operator Manual

More than clean, it's ReadySpace.®

Hygenic® Fully Cleanable Tanks

North America

1032047
Rev. 02 (03-2009)

www.tennantco.com

Home Find... Go To..

This manual is furnished with each new model. It provides necessary operation and maintenance instructions.

Read this manual completely and understand the machine before operating or servicing it.

A complete illustrated Parts Manual is also furnished with each new model. Use the Parts Manual to order replacement parts. To ensure prompt delivery, follow the “HOW TO ORDER PARTS” instructions printed in the Parts Manual.

This machine will provide excellent service. However, the best results will be obtained at minimum costs if:

- The machine is operated with reasonable care.
- The machine is maintained regularly - per the machine maintenance instructions provided.
- The machine is maintained with manufacturer supplied or equivalent parts.

PROTECT THE ENVIRONMENT

Please dispose of packaging materials, old machine components such as batteries, hazardous fluids such as anti-freeze and oil, in an environmentally safe way according to local waste disposal regulations.

Always remember to recycle.

MACHINE DATA

IMPORTANT: To ensure full warranty protection, fill out the attached MACHINE INSTALLATION / WARRANTY REPORT REPLY CARD and return to Tennant within 30 days of purchase.

Please fill out at time of installation for future reference.

Model No. – _____

Serial No. – _____

Machine Options – _____

Sales Rep. – _____

Sales Rep. Phone No. – _____

Customer Number – _____

Installation Date – _____

TENNANT Company
PO Box 1452
Minneapolis, MN 55440
Phone: (800) 553-8033 or (763) 513-2850

www.tennantco.com

Specifications and parts are subject to change without notice.

Copyright © 2006, 2009 TENNANT COMPANY, Printed in U.S.A.
All rights reserved.

TABLE OF CONTENTS

SAFETY PRECAUTIONS **4**

SAFETY LABELS **5**

MACHINE COMPONENTS **6**

CONTROL PANEL COMPONENTS **7**

MACHINE INSTALLATION **8**
- UNCRATING MACHINE 8

BATTERY INSTALLATION **8**

DUAL CLEANING TECHNOLOGY **9**
- HOW THE DUAL TECHNOLOGY WORKS . 9

MACHINE SETUP **10**
- PREPARING MACHINE FOR READYSPACE CLEANING 10
- PREPARING MACHINE FOR RESTORATIVE EXTRACTION CLEANING 10
- FILLING SOLUTION TANK 11

MACHINE OPERATION **11**
- PRE-OPERATION CHECKS 11
- OPERATING THE MACHINE 11
- EMERGENCY STOPPING 13
- WHILE OPERATING THE MACHINE 13
- SOLUTION TANK EMPTY INDICATOR 13
- RECOVERY TANK FULL INDICATOR 14
- BATTERY CHARGE LEVEL INDICATOR . . . 14
- FAULT INDICATOR 14
- HOUR METER 14
- FAULT INDICATOR LIGHT/BEEP CODES . . 15
- CIRCUIT BREAKERS / FUSES 16

ACCESSORY TOOL OPERATION **16**
- PREPARING MACHINE FOR ACCESSORY TOOL CLEANING 16
- OPERATING ACCESSORY TOOLS 17

DRAINING AND CLEANING TANKS **17**
- DRAINING AND CLEANING RECOVERY TANK 17
- DRAINING AND CLEANING SOLUTION TANK 18

CHARGING BATTERIES **18**
- BATTERY CHARGER SPECIFICATIONS . . . 18

MACHINE MAINTENANCE **19**
- AFTER EVERY USE 19
- AFTER EVERY 10 HOURS OF USE 20
- AFTER EVERY 80 HOURS OF USE 22
- MOTOR MAINTENANCE 23
- BATTERY MAINTENANCE 23
- PRIMING SOLUTION SYSTEM 24

MACHINE JACKING **24**

PUSHING, TOWING, AND TRANSPORTING MACHINE **24**
- PUSHING OR TOWING THE MACHINE 24
- TRANSPORTING THE MACHINE 25

STORING MACHINE **25**

RECOMMENDED STOCK ITEMS **25**

TROUBLESHOOTING **26**

MACHINE SPECIFICATIONS **28**

MACHINE DIMENSIONS **29**

SOLUTION FLOW DIAGRAM **30**

SAFETY PRECAUTIONS

This machine is intended for industrial and commercial use. It is designed exclusively to clean carpets and upholstery in an indoor environment and is not constructed for any other use. Only use recommended accessory tools and commercially available carpet cleaners intended for machine application

The following warning alert symbol and the "FOR SAFETY" heading are used throughout this manual as indicated in their description:

WARNING: To warn of hazards or unsafe practices which could result in severe personal injury or death.

FOR SAFETY: To identify actions which must be followed for safe operation of equipment.

The following safety precautions signal potentially dangerous conditions to the operator or equipment. All operators must read, understand and practice them.

WARNING: Fire Or Explosion Hazard

- **Do Not Use Flammable Liquids Or Operate Machine In Or Near Flammable Liquids, Vapors Or Combustible Dusts.**

This machine is not equipped with explosion proof motors. The electric motors will spark upon start up and during operation which could cause a flash fire or explosion if machine is used in an area where flammable vapors/liquids or combustible dusts are present.

- **Do Not Pick Up Flammable Materials Or Reactive Metals.**
- **Batteries Emit Hydrogen Gas. Keep Sparks And Open Flame Away. Keep Battery Compartment Open When Charging.**

WARNING: Electrical Hazard

- **Disconnect Battery Cables and Charger Plug Before Servicing Machine.**
- **Do Not Charge Batteries with Damaged Power Supply Cord. Do Not Modify Plug.**

If the charger supply cord is damaged or broken, it must be replaced by the manufacturer or its service agent or a similarly qualified person in order to avoid a hazard.

WARNING: Spinning Brush. Keep Hands Away. Turn Off Power Before Working On Machine.

FOR SAFETY:

1. **Do not operate machine:**
   - **Unless trained and authorized.**
   - **With brake disabled.**
   - **Unless operator manual is read and understood.**
   - **With flammable liquids or near flammable vapors as an explosion or flash fire may occur.**
   - **If not in proper operating condition.**
   - **In areas with possible falling objects.**
2. **Before starting machine:**
   - **Make sure all safety devices are in place and operate properly.**
   - **Check brakes and steering for proper operation.**
   - **Place "wet floor" signs as needed.**
3. **When using machine:**
   - **Go slowly on inclines and slippery surfaces.**
   - **Reduce speed when turning.**
   - **Use care when backing machine.**
   - **Report machine damage or faulty operation immediately.**
   - **Never allow children to play on or around.**
   - **Follow mixing and handling instructions on chemical containers.**
   - **Do not operate on inclines that exceed a 6° angle / 10.5% grade.**
4. **Before leaving or servicing machine:**
   - **Stop on level surface.**
   - **Turn off machine.**
   - **Remove key.**
5. **When servicing machine:**
   - **Do not push or tow the machine on inclines with the brake disabled.**
   - **Avoid moving parts. Do not wear loose jackets, shirts, or sleeves.**
   - **Disconnect battery cables and charger plug before working on machine.**
   - **Wear protective gloves and eye protection when handling batteries or battery cables.**
   - **Avoid contact with battery acid.**
   - **Do not power spray or hose off machine. Electrical malfunction may occur.**
   - **Jack machine up at designated locations only. Block machine up with jack stands.**
   - **Block machine tires before jacking machine up.**
   - **Use jack or hoist that will support machine weight.**
   - **Use manufacturer supplied or approved replacement parts.**

- All repairs must be performed by a qualified service person.
- Do not modify the machine from its original design.

6. When loading/unloading machine onto/off truck or trailer:
   - Drain tanks before loading.
   - Use a ramp that can support the machine weight and operator.
   - Do not operate the machine on a ramp incline that exceeds an 11° angle.
   - Lower scrub head after loading.
   - Turn machine off.
   - Place blocks behind wheels.
   - Use tie-down straps to secure machine.

SAFETY LABELS

The safety labels appear on the machine in the locations indicated. Replace labels if they are missing or become damaged or illegible.

BATTERY CHARGING LABEL -
Located on seat panel

FLAMMABLE SPILLS LABEL -
Located on seat panel

FOR SAFETY LABEL -
Located on seat panel

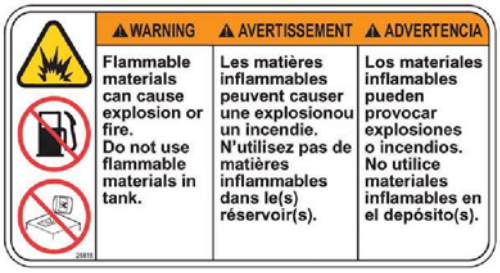

FLAMMABLE MATERIALS LABEL -
Located under the solution fill port and and next to foot pedals

ELECTRICAL COMPONENTS, USE GROUNDING STRAP BEFORE OPENING PANEL LABEL -
Located on electrical panel under seat

MACHINE COMPONENTS

1. Control Panel
2. Steering wheel
3. Operator seat
4. Propel pedal
5. Brake pedal
6. Propel wheel
7. Propel wheel guard
8. Scrub head
9. Extraction vacuum shoes
10. ReadySpace vacuum shoes
11. ReadySpace vacuum shoe flush lines
12. Solution tank
13. Solution tank fill cap
14. Solution tank access cover
15. Battery compartment
16. Battery charge receptacle
17. Recovery tank
18. Recovery tank cover
19. Recovery tank drain hose
20. Solution tank drain hose
21. Main vacuum hose
22. Recovery intake connector
23. ReadySpace cleaning vacuum hose
24. Extraction cleaning vacuum hose
25. Anti-static strap
26. Solution tank filter
27. Accessory tool solution hose coupler
28. ReadySpace rollers
29. Extraction cleaning brushes

CONTROL PANEL COMPONENTS

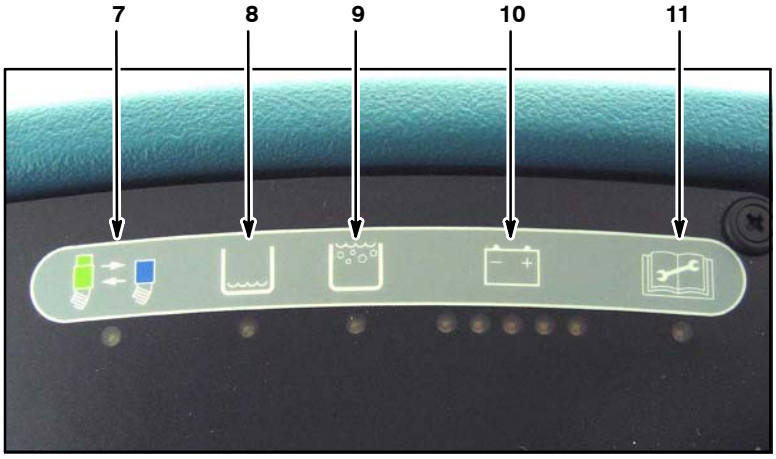

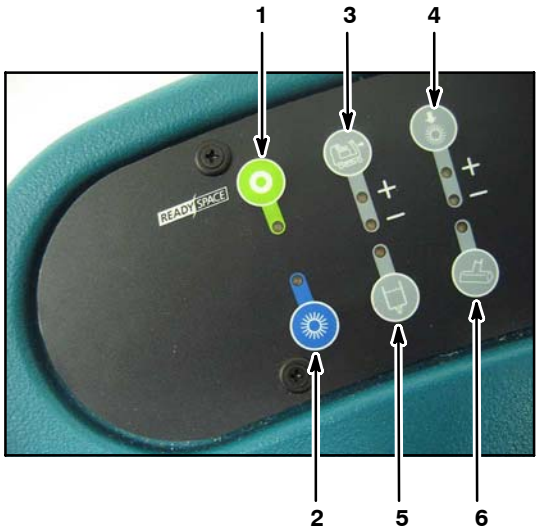

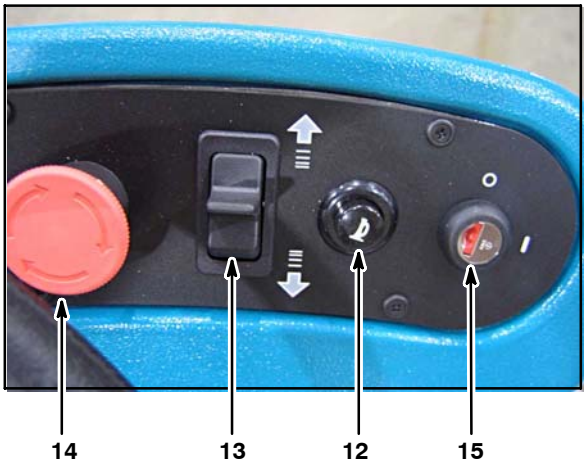

1. ReadySpace on/off button
2. Extraction cleaning on/off button
3. Speed selection button (–) standard (+) high productivity
4. Brush pressure button (–) standard (+) heavy
5. Solution on/off button (extraction cleaning)
6. Accessory tool on/off button
7. Vacuum hose connection indicator
8. Solution tank empty indicator
9. Recovery tank full indicator
10. Battery charge level indicator
11. Fault indicator
12. Horn button
13. Directional switch
14. Emergency stop button
15. Main power on/off key switch

MACHINE INSTALLATION

UNCRATING MACHINE

1. Carefully check machine for signs of damage. Report damages at once to carrier.
2. Check the contents list. Contact distributor for missing items.

   Contents:
   - 2 Extraction Brushes
   - 2 ReadySpace Rollers
   - Battery Charger (option)
   - 4 Batteries (pre-installed option)
   - 4 Battery Cables
   - 8 Battery Post Covers
   - 8 Battery Cable Rubber Boots
   - Battery Strap
   - Battery Tray
   - Operator Training CD #1026544
   - Parts Manual #1032125
3. To uncrate the machine, remove the shipping hardware that secures the machine to the pallet. Using the supplied ramp carefully back the machine off the pallet. Make sure the scrub head is in the raised position.

ATTENTION: Do not drive machine off pallet without using the ramp, machine damage may occur.

BATTERY INSTALLATION

WARNING: Fire Or Explosion Hazard. Batteries Emit Hydrogen Gas. Keep Sparks And Open Flame Away. Keep Battery Compartment Open When Charging.

FOR SAFETY: When installing batteries, wear protective gloves and eye protection. Avoid contact with battery acid.

Battery Specifications:
Four 6 volt, deep cycle, 335 AH batteries. Maximum battery dimensions: 190 mm (7.5 in) W x 324 mm (12.75 in) L x 381 mm (15.00 in) H.

1. Park the machine on a level surface and remove the key.
2. Lift the operator seat forward and disconnect the seat sensor wire harness (Figure 1).

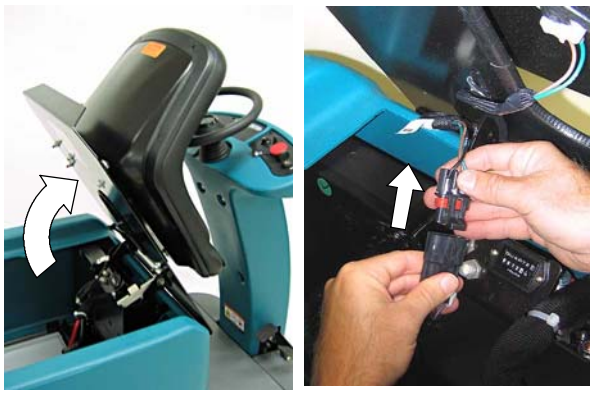

FIG. 1

3. Remove the seat from the machine by lifting it up and away (Figure 2).

FIG. 2

4. Remove the battery compartment shroud from the machine (Figure 3). A 13 mm socket wrench is required.

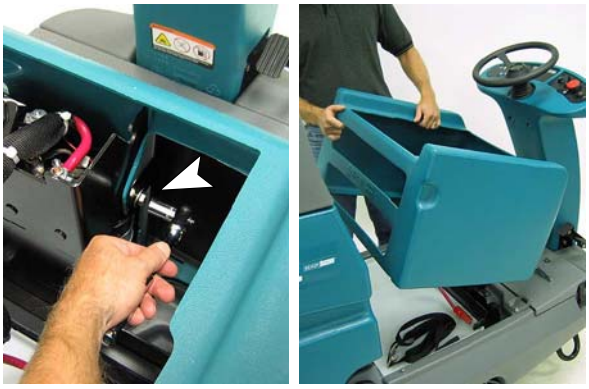

FIG. 3

5. Carefully install the batteries into the battery compartment tray and arrange the battery posts as shown (Figure 5) . Secure the batteries with strap provided (Figure 4).

FIG. 4

6. Connect the cables to the battery posts in as shown (Figure 5), RED TO POSITIVE (+) and BLACK TO NEGATIVE (-).

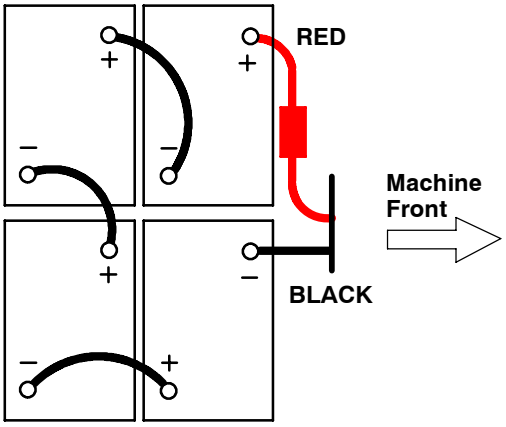

FIG. 5

7. Replace the battery compartment shroud and seat. Reconnect seat harness.

DUAL CLEANING TECHNOLOGY

The machine offers two cleaning technologies, Restorative Extraction and Soil Transfer Extraction, which is referred to as ReadySpace® cleaning. By using both technologies, you can easily develop a cleaning program to greatly extend the use-life of your carpet. With the simple exchange of two rollers or brushes, you can easily switch from one technology to the other.

Restorative Extraction Cleaning: Use this technology periodically to thoroughly clean to the base of the carpet. The amount and type of daily traffic are important factors to determine how often restorative extraction should be performed. This type of cleaning should be planned in advance to allow enough time for the extracted carpet to dry.

ReadySpace® Cleaning: Use this technology to clean visible soils on a daily basis or as needed to maintain a high level of carpet cleanliness. ReadySpace cleaning may be used during normal business hours because the carpet is dry in less than 30 minutes. Drying time may vary due to carpet type and climate conditions.

NOTE: *Before ReadySpace cleaning, first use restorative extraction cleaning if carpets are heavily soiled. Then begin your ReadySpace cleaning program.*

HOW THE DUAL TECHNOLOGY WORKS

Restorative Extraction Cleaning: Water is sprayed directly onto the carpet. As the machine moves forward, two counter-rotating chevron brushes agitate the solution deep into the carpet fibers. As the machine continues to move forward, the vacuum shoes recover the dirty solution out of the carpet.

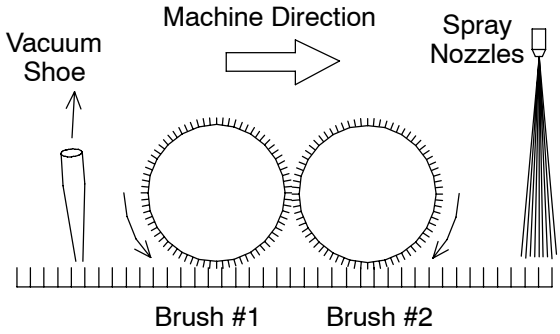

ReadySpace® Cleaning: Water is sprayed directly on two counter-rotating nylon fiber rollers, not the carpet. Then much of the water is removed from the rollers using two vacuum shoes, leaving the rollers damp. The damp rollers then agitate the carpet, working both sides of the carpet fiber, at the same time transferring the soil to the rollers. Again, hot rinse water is sprayed on the soiled rollers allowing the two vacuum shoes to easily extract the soil from the rollers.

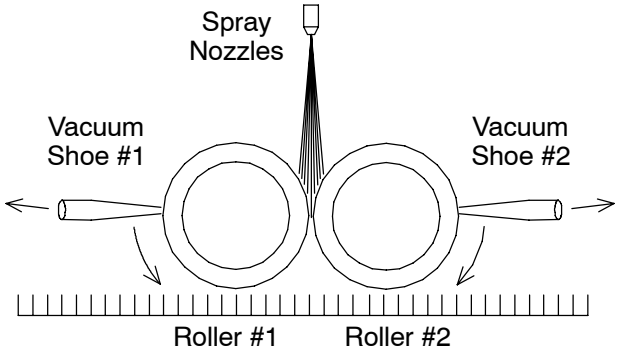

MACHINE SETUP

PREPARING MACHINE FOR READYSPACE CLEANING

1. Park the machine on a level surface and remove the key. Make sure the scrub head is in the raised position.
2. Remove the idler plates from the scrub head (Figure 6).

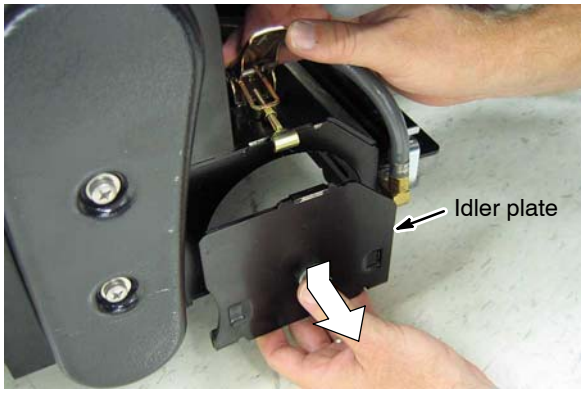

FIG. 6

3. Install the ReadySpace rollers and re-fasten the idler plates (Figure 7).

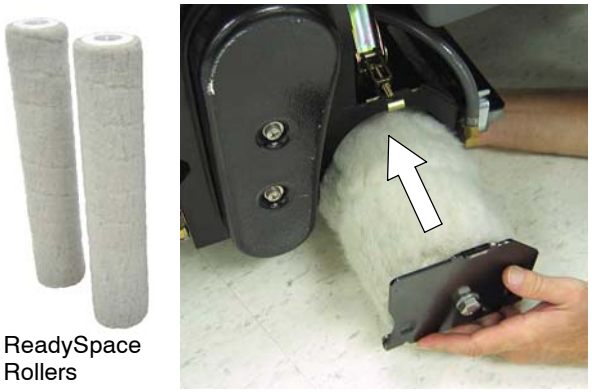

FIG. 7

4. Connect the green ReadySpace vacuum hose to the recovery intake connector (Figure 8).

FIG. 8

PREPARING MACHINE FOR RESTORATIVE EXTRACTION CLEANING

FIRST TIME USE: *See PRIMING SOLUTION SYSTEM on page 24.*

1. Park the machine on a level surface and remove the key. Make sure the scrub head is in the raised position.
2. Remove the idler plates from scrub head (Figure 9).

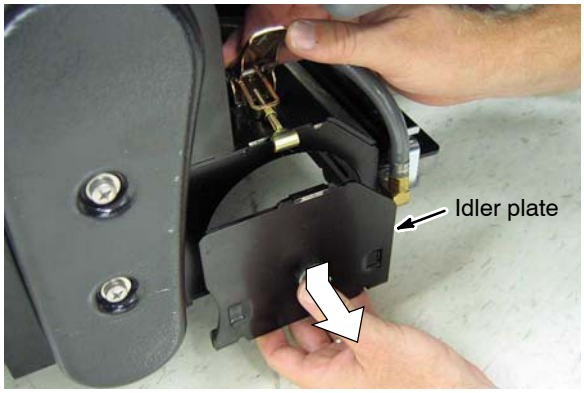

FIG. 9

3 Install the extraction brushes and re-fasten the idler plates (Figure 10). *NOTE: The brush end with the letter " I " indicates idler plate end. The "I" should face outward.*

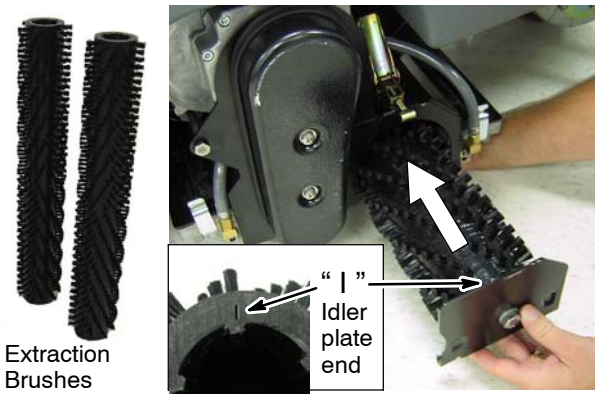

FIG. 10

4. Connect the blue extraction vacuum hose to the recovery intake connector (Figure 11).

FIG. 11

FILLING SOLUTION TANK

Fill the solution tank with hot water, 140°F / 60°C maximum (Figure 12). The solution tank capacity is 32 gal / 121 L.

For Restorative Extraction Cleaning and Accessory Tool Cleaning: For best cleaning results, it is recommended to pre-spray the carpet with a commercially available cleaning agent rather than adding the cleaning agent to the solution tank (Figure 13).

ATTENTION: Only use commercially available cleaning agents in solution tank. Machine damage due to improper agent usage will void the manufacturer's warranty.

For ReadySpace Cleaning: Do not add cleaning agents to solution tank. Cleaning agent MUST be pre-sprayed on the carpet (Figure 13).

WARNING: Fire or Explosion Hazard. Never Use Flammable Liquids.

FIG. 12

MACHINE OPERATION

FOR SAFETY: Do not operate machine unless operator manual is read and understood.

PRE-OPERATION

- ❑ **FIRST TIME USE:** When extraction cleaning the solution system must be primed. *See PRIMING SOLUTION SYSTEM on page 24.*
- ❑ Vacuum floor and remove any large debris.
- ❑ Check battery charge level indicator.
- ❑ Check condition of rollers or brushes.
- ❑ ReadySpace Cleaning: Make sure solution tank is filled with only water, no cleaning agents.
- ❑ Check vacuum hoses at rear of machine for proper connection.
- ❑ Check the brakes and steering for proper operation.

OPERATING THE MACHINE

Before operating the machine, pre-spray the carpet with a commercially available cleaning agent (Figure 13).

FIG. 13

FOR SAFETY: In the event of an emergency, strike the emergency stop button to shut off all power to the machine (Figure 23).

1. Adjust the seat to a comfortable operating position and turn the key to the on (I) position (Figure 14).

FIG. 14

2. Select the type of cleaning by pressing the ReadySpace cleaning button or the restorative extraction cleaning button (Figure 15).

   The hose connection indicator will blink if the machine is not set up according to your selection. *See MACHINE SETUP on page 10.*

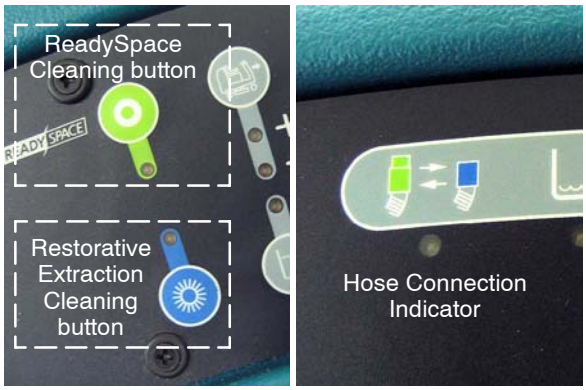

FIG. 15

3. Position the directional lever in the direction you want to move (Figure 16). The horn will beep repeatedly when moving backwards.

NOTE: During ReadySpace cleaning, the machine will continue to clean in reverse. This allows you to back track over heavily soiled areas. During extraction cleaning, the vacuum shoes will rise when in reverse.

FIG. 16

4. To begin cleaning, press the propel pedal (Figure 17). The speed is controlled by the amount of pressure applied to the pedal.

FIG. 17

5. For heavily soiled areas, press the brush pressure button to the (+) setting (Figure 18).

FIG. 18

6. For high productivity, press the speed selection button to the (+) setting. For best cleaning results, use the standard (–) default setting (Figure 19).

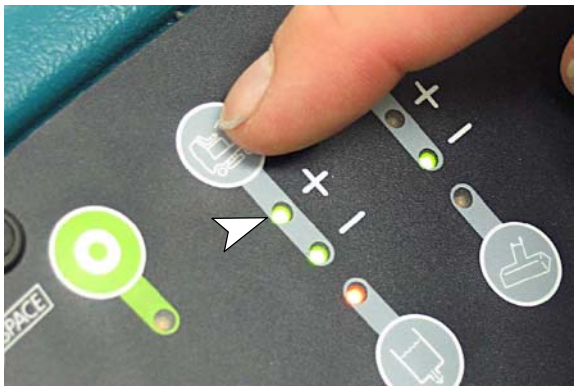

FIG. 19

7. During restorative extraction cleaning, the solution flow can be turned off as needed (Figure 20).

   This allows the operator to:
   - Recover the solution at the end of a path.
   - Turn 180° without leaving solution on the floor.
   - Double scrub areas without adding more solution.
   - Pick up water spills.

FOR SAFETY: When operating machine near hard floor surfaces, place “WET FLOOR” signs as needed.

FIG. 20

8. To stop the machine, position the machine on a level surface and release the propel pedal (Figure 21). The machine will automatically engage the parking brake.

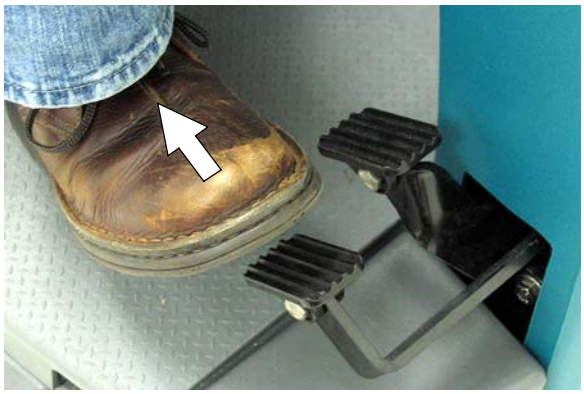

FIG. 21

9. Press the brake pedal if a quicker stop is needed or when operating on an incline (Figure 22). Do not operate on inclines exceeding a 6° angle / 10.5% grade.

FIG. 22

10. To transport the machine from one location to another, turn the cleaning function button off. The scrub head will rise and the machine speed will slightly increase when transporting.

EMERGENCY STOPPING

Strike the emergency stop button in the event of an emergency (Figure 23). This button shuts off all power to the machine. To regain power, turn the button clockwise and restart the key.

FIG. 23

WHILE OPERATING THE MACHINE

⚠ WARNING: Fire Or Explosion Hazard. Do Not Pick Up Flammable Materials Or Reactive Metals.

1. Drive the machine in a straight path where possible and overlap the cleaning path by a few inches.
2. Avoid turning the steering wheel too sharply and reduce speed when turning.
3. Keep machine moving to prevent carpet damage.
4. When cleaning dead end aisles, start at the closed end.
5. If the machine detects a fault, the fault indicator light will come on or the horn will begin to beep (Figure 24). *See FAULT INDICATOR LIGHT/BEEP CODES on page 15 to determine machine fault.*

FIG. 24

6. Observe the recovery tank for excessive foam. Use a recommended foam control solution to minimize foam buildup.
7. Do not operate machine on inclines that exceed a 6° angle / 10.5% grade when cleaning or an 11° angle / 19.25% grade when transporting.

FOR SAFETY: When operating machine, go slowly on inclines and slippery surfaces.

8. Observe the battery charge level indicator. *See BATTERY CHARGE LEVEL INDICATOR on page 14.*
9. Remove the key when leaving the machine unattended.
10. After restorative extraction cleaning, place air movers in the area to reduce the drying time.
11. Perform the machine maintenance procedures. *See MACHINE MAINTENANCE on page 19.*

SOLUTION TANK EMPTY INDICATOR

The solution tank empty indicator light will come on when the solution tank is empty (Figure 25). When the light comes on, the scrubbing function becomes disabled. Drain the recovery tank at this time and refill the solution tank.

FIG. 25

RECOVERY TANK FULL INDICATOR

The recovery tank full indicator light will come on when the recovery tank is full (Figure 26). When the light comes on, the operator will have one minute to continue scrubbing. After one minute, the scrubbing function becomes disabled. Drain the recovery tank at this time. *See DRAINING AND CLEANING TANKS on page 17.*

FIG. 26

BATTERY CHARGE LEVEL INDICATOR

The battery charge level indicator displays the charge level of the batteries. When the batteries are fully charged, all five indicator lights will glow (Figure 27). As the batteries discharge, the indicator lights will begin to go out from right to left.

When the discharge level reaches the red light, stop scrubbing and recharge the batteries. If the red light begins to blink, the cleaning function will automatically shut off to protect the batteries from total discharge. The machine will still propel when light is blinking. Drive machine to charging station and recharge batteries.

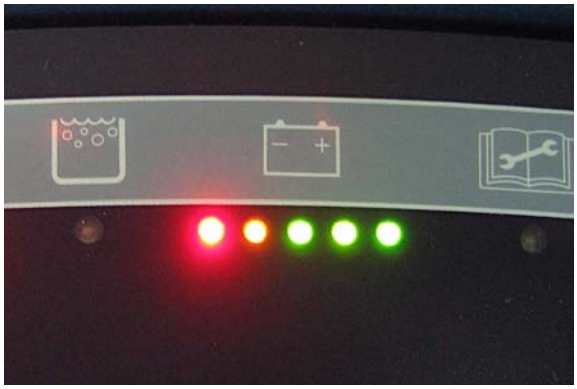

FIG. 27

FAULT INDICATOR

The fault indicator light will come on if the machine detects a fault (Figure 28). *Refer to the FAULT INDICATOR LIGHT/BEEP CODES on page 15 to determine the machine fault.*

FIG. 28

HOUR METER

The hour meter records the number of hours the machine has been powered on. This information is useful for servicing the machine. The meter is located under the seat (Figure 29).

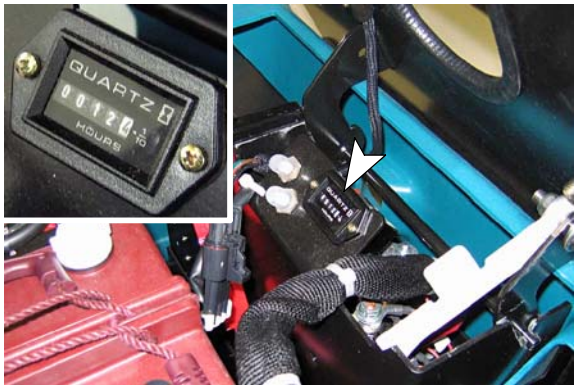

FIG. 29

FAULT INDICATOR LIGHT/BEEP CODES

The fault indicator light will come on or the horn will beep if the machine detects a fault. Use the following fault codes to determine cause of fault.

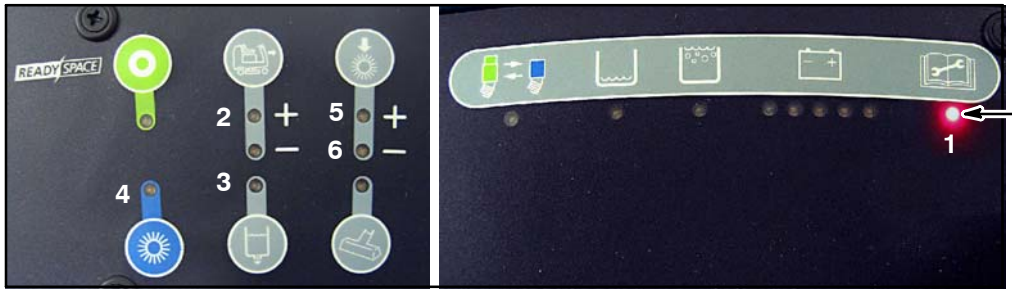

REF.	FAULT LIGHT CODE	FAULT	SOLUTION
1	Fault light blinks	Propel motor overload Exceeded maximum incline	Avoid steep inclines. Restart key to reset. Contact Service Center.
1 & 2	Fault light and Speed (+) light blink	Rear brush motor overload	Inspect brush for obstruction. Contact Service Center.
1 & 3	Fault light and Solution light blink	Front brush motor overload	Inspect brush for obstruction. Contact Service Center.
1 & 4	Fault light and Extract light blink	Vacuum motor overload	Contact Service Center.
1 & 5	Fault light and Brush pressure (+) light blink	Scrub head actuator overload	Contact Service Center.
1 & 6	Fault light and Brush pressure (–) light blink	Extractor shoe actuator overload	Contact Service Center.

FAULT BEEP CODE	FAULT	SOLUTION
Horn repeatedly beeps **two** times	Propel pedal depressed without operator in seat	Operator must be seated to operate machine
Horn repeatedly beeps **four** times	Key switch turned on with propel pedal depressed	Release propel pedal before turning key on
Horn repeatedly beeps **five** times	Throttle system failure	Contact Service Center
Horn repeatedly beeps **six** times	Brake system failure	Contact Service Center
Horn repeatedly beeps **seven** times	Parking brake system failure	Contact Service Center
Horn repeatedly beeps **eight** times	Emergency stop button activated	Turn button clockwise and restart key to reset
Horn repeatedly beeps **nine** times	Key switch turned on with battery charger plugged into machine	Unplug battery charger before start-ing machine

CIRCUIT BREAKERS / FUSES

The machine is equipped with two resettable circuit breakers and two fuses to protect the machine from damage. If a breaker should trip, determine the cause, allow the motor to cool then reset the circuit breaker button.

The circuit breakers and the fuses are located inside the battery compartment near the hour meter (Figure 30). When replacing a blown fuse never substitute a higher amp rated fuse than specified.

CIRCUIT BREAKERS:

5 A – controller key switch input
15 A – solution pump/solution solenoid/ brake/horn/ hour meter *(See page 30 for solution solenoid reference)*

FUSES:

100 A – main (part no. 86379)
7.5 A – solution pump (part no. 1016039)

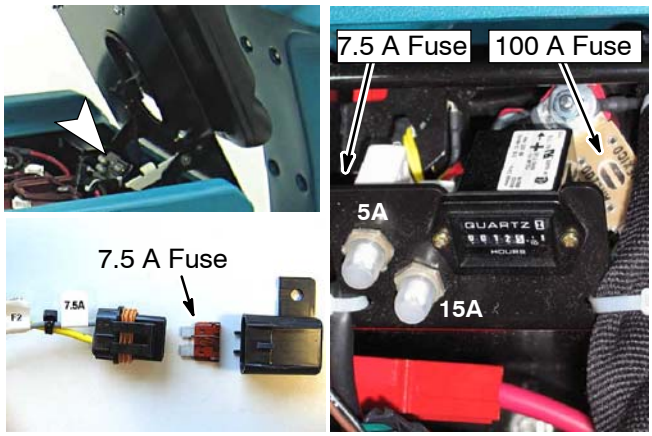

FIG. 30

FOR SAFETY: When servicing machine, all repairs must be performed by a qualified service person.

ACCESSORY TOOL OPERATION

Optional cleaning tool accessories are required for accessory tool operation. The use of accessory cleaning tools allow you to clean areas where the machine is unable to reach, such as alcoves, stairs and small rooms. Upholstery tool attachments are also available.

For a complete list of available cleaning tool accessories refer to the supplied PARTS LIST manual.

PREPARING MACHINE FOR ACCESSORY TOOL CLEANING

1. Fill the solution tank. *See FILLING SOLUTION TANK on page 11.*
2. Park the machine on a level surface and turn the key to the off position.
3. Connect the accessory solution hose to the solution coupler (Figure 31).

FIG. 31

4. Connect the accessory vacuum hose to the recovery intake connector (Figure 32).

FIG. 32

5. Attach the accessory tool to the hoses.

OPERATING ACCESSORY TOOLS

1. Turn the key switch to the on (I) position.
2. Press the accessory tool button (Figure 33).

NOTE: The propel system is disabled when the accessory tool cleaning system is activated.

FIG. 33

3. Place the accessory tool on the surface to be cleaned. Squeeze the spray trigger and slowly pull the tool backwards while applying downward pressure (Figure 34). Release the trigger 15 cm / 6 inches from end of stroke.

   When returning to the next stroke, push the tool forward over the same path with trigger released. Continue this pull and push method with a 5 cm / 2 inch overlap.

NOTE: *When cleaning upholstery, follow the cleaning instructions sewn in the furniture by the manufacturer.*

WARNING: Fire Or Explosion Hazard. Do Not Pick Up Flammable Materials Or Reactive Metals.

FIG. 34

4. After cleaning, relieve the water pressure from the accessory tool before disconnecting the solution hose. Squeeze trigger for five seconds after turning the key off.

DRAINING AND CLEANING TANKS

The tanks should be drained and cleaned after each use. Floor sinks work best for draining machine.

DRAINING AND CLEANING RECOVERY TANK

1. Drive the machine to the disposal area and turn the key switch to the off position.
2. Hold the recovery tank hose upward, remove the cap and slowly lower hose to drain (Figure 35).

FIG. 35

3. Open the recovery tank cover and rinse out the inside of the recovery tank with clean water (Figure 36).

FIG. 36

DRAINING AND CLEANING SOLUTION TANK

1. Hold the solution tank hose upward, remove the cap and slowly lower hose to drain (Figure 37).

FIG. 37

2. Tilt the recovery tank back and remove the solution tank cover to access the solution tank. Clean the solution tank (Figure 38). Make sure the recovery tank is empty before tilting.

FIG. 38

CHARGING BATTERIES

ATTENTION: To prolong the life of the batteries only recharge the batteries if the machine was used for a total of 30 minutes or more. Do not leave batteries discharged for lengthy periods.

⚠ WARNING: Fire Or Explosion Hazard. Batteries Emit Hydrogen Gas. Keep Sparks And Open Flame Away. Keep Battery Compartment Open When Charging.

FOR SAFETY: When servicing batteries, wear protective gloves and eye protection when handling batteries and battery cables. Avoid contact with battery acid.

BATTERY CHARGER SPECIFICATIONS

- CHARGER TYPE:
  – FOR WET (Lead acid) BATTERIES
- OUTPUT VOLTAGE - 24 VOLTS
- OUTPUT CURRENT - 30 AMPS
- AUTOMATIC SHUTOFF CIRCUIT
- FOR DEEP CYCLE BATTERY CHARGING

1. Park the machine on a flat, dry surface and turn the key off. Make sure the area is well ventilated.
2. Tilt the seat forward for ventilation (Figure 39). Use the seat stand to hold the seat up.

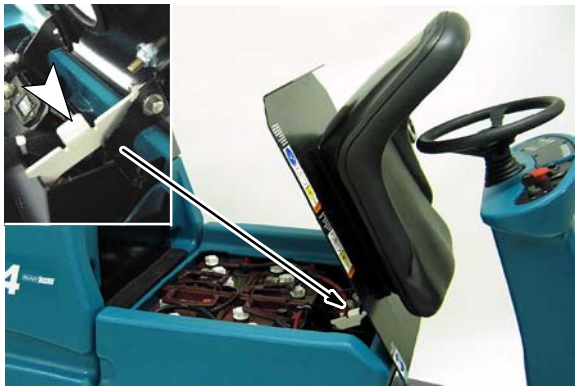

FIG. 39

3. Check the battery fluid level before charging (Figure 40). The fluid level should slightly cover the battery plates. Add distilled water if low. DO NOT OVERFILL. The fluid will expand and may overflow when charging.

FOR SAFETY: When servicing batteries, wear protective gloves and eye protection when handling batteries and battery cables. Avoid contact with battery acid.

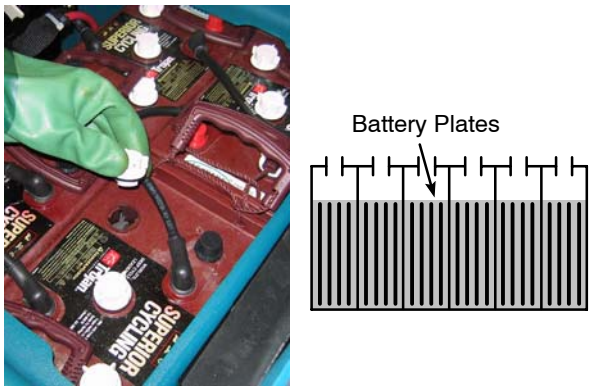

FIG. 40

4. Connect the charger's AC power supply cord into a properly grounded wall outlet.

5. Connect the charger's DC cord into the machine's battery charge receptacle (Figure 41).

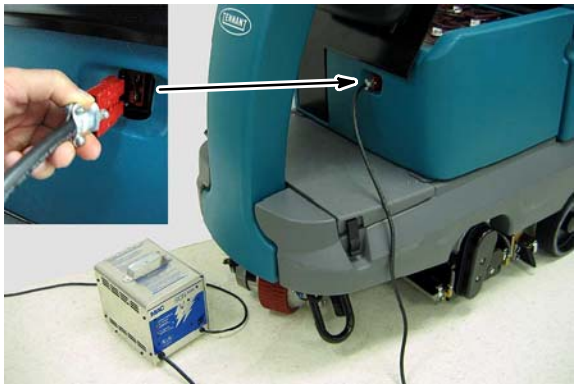

FIG. 41

6. The supplied charger will automatically begin charging and shut off when fully charged.

NOTE: *The machine will not operate when charging.*

ATTENTION: Do not disconnect the charger's DC cord from the machine's receptacle when the charger is operating. Arcing may result. If the charger must be interrupted during charging, disconnect the AC power supply cord first.

MACHINE MAINTENANCE

To keep the machine in good working condition, perform the following maintenance procedures.

FOR SAFETY: Before leaving or servicing machine, stop on a level surface and turn off machine.

⚠ WARNING: Electrical Hazard. Disconnect Battery Cables Before Servicing Machine.

ATTENTION: Contact an authorized service center for machine repairs. Machine repairs performed by other than an authorized person will void your warranty.

AFTER EVERY USE

1. Drain and rinse out the recovery tank (Figure 42).

FIG. 42

2. Rinse off the recovery tank float sensor (Figure 43).

FIG. 43

3. Clean the vacuum fan filter with low water pressure (Figure 44). Allow the filter to completely dry before reinstalling.

FIG. 44

4. Drain the solution tank (Figure 45).

FIG. 45

5. Clean the front and back half of the solution tank. Clean the solution tank sensor and filter (Figure 46).

FIG. 46

6. Clean the outside surface of the machine with an all purpose cleaner and damp cloth (Figure 47).

FOR SAFETY: When cleaning machine, do not power spray or hose off machine. Electrical malfunction may occur.

FIG. 47

7. Recharge the batteries if the machine was used for at total of 30 minutes or more (Figure 48).

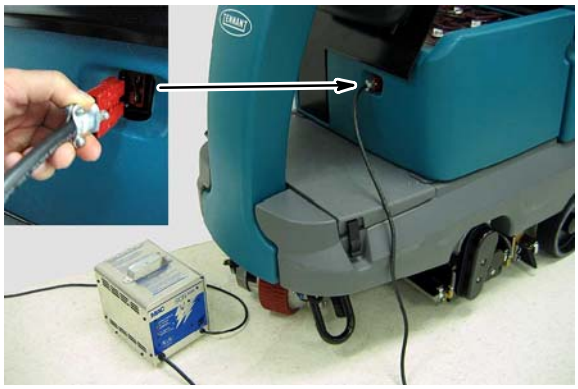

FIG. 48

AFTER EVERY 10 HOURS OF USE

1. Flip the ReadySpace rollers end-for-end every 10 hours (Figure 49). Replace the rollers if an air gap is visible between the two rollers. The roller life is rated at 100 hours of use under normal cleaning conditions. Always replace rollers as a set.

FIG. 49

2. Remove any entangled carpet fibers and debris from the extractor brushes (Figure 50). Replace the brushes if damaged or worn.

FIG. 50

3. Clean the underside of the scrub head and the idler plate (Figure 51).

FIG. 51

4. Remove the covers from the ReadySpace vacuum shoes and wipe out the debris build up (Figure 52). Remove the ReadySpace rollers and use a pointed object to clean vacuum shoe intake slot.

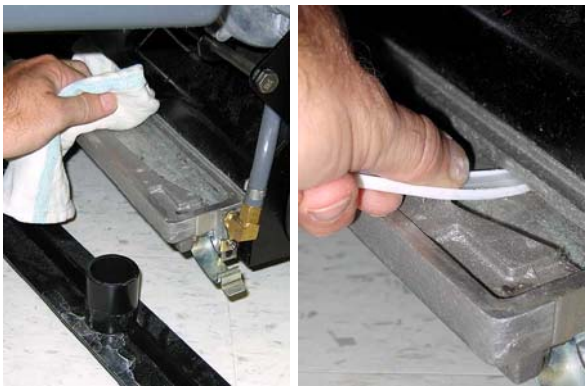

FIG. 52

5. Remove the extraction vacuum shoes and rinse out the debris buildup (Figure 53). Use a pointed object to clean the vacuum shoe intake slot. (*See Figure 54 for Extraction Vacuum Shoe Removal.)*

FIG. 53

Extraction Vacuum Shoe Removal (Figure 54):

a. With the scrub head in the up position, remove the two down pressure springs. Lower the scrub head after removing springs.

b. Disconnect the vacuum hose.

c. Pull the two mounting pins

d. Remove shoe from scrub head.

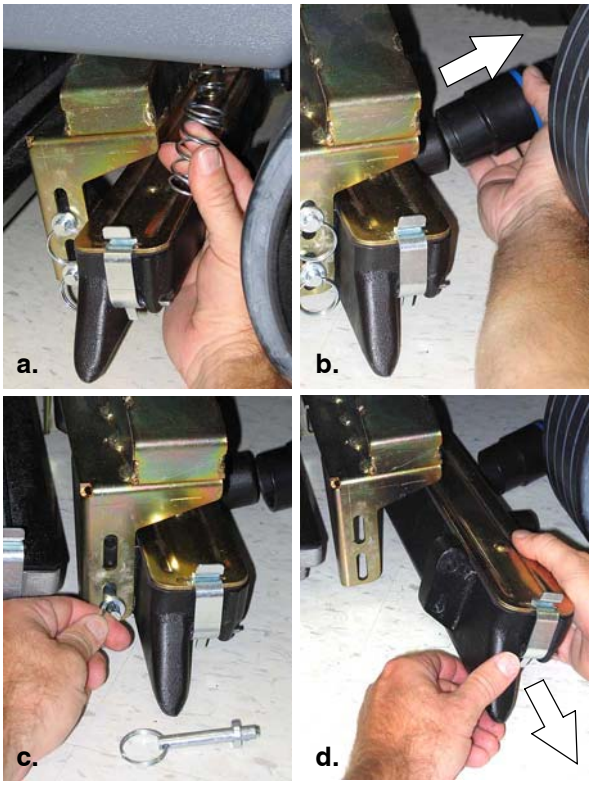

FIG. 54

AFTER EVERY 80 HOURS OF USE

1. Empty the solution tank and remove the solution tank filter from under the machine and rinse out the screen (Figure 55).

FIG. 55

2. Remove the two Restorative Extraction spray nozzles and soak the tips and screens in an acetic acid solution (Figure 56). Use a plastic bristle brush to clean clogged spray tips. Do not use a pointed object to clean tips, damage will occur.

FIG. 56

When replacing the extraction spray nozzles, turn the cap until it clicks into position. The position of the spray nozzles is set at a 3° angle (Figure 57).

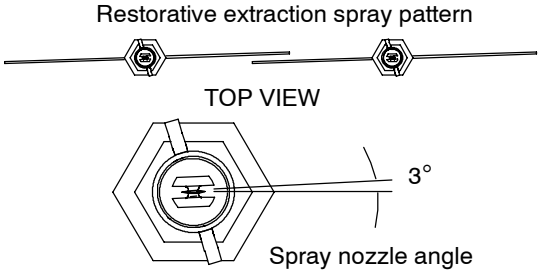

FIG. 57

3. Remove the two ReadySpace spray nozzles and soak the tips in an acetic acid solution (Figure 58). Use a plastic bristle brush to clean clogged spray tips. Do not use pointed objects to clean tips, damage will occur.

ReadySpace Spray Nozzle
GREEN CAP / TIP #11002 p/n 575283000

FIG. 58

When replacing the ReadySpace spray nozzles, turn the cap until it clicks into position. The position of the spray nozzles is set to spray directly between the two rollers (Figure 59).

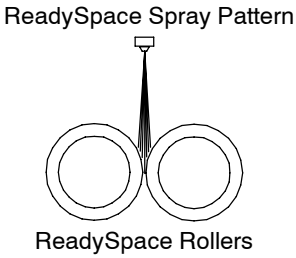

FIG. 59

4. Remove the two ReadySpace vacuum shoe flush lines and soak them in an acetic acid solution (Figure 60). Do not remove the tips from the flush lines.

NOTE: *During ReadySpace operation the flush line spray tips will spray every 2 1/2 minutes for 3 seconds.*

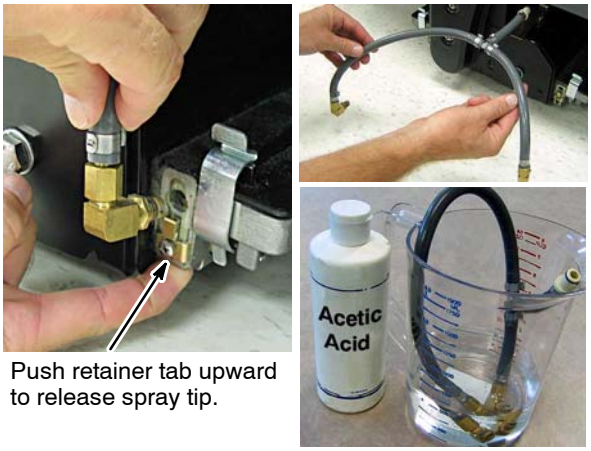

Push retainer tab upward to release spray tip.

FIG. 60

5. Flush the plumbing system with an acetic acid solution to dissolve normal alkaline buildup. This procedure requires the machine to sit overnight.
   a. Remove rollers/brushes from the scrub head.
   b. Pour 3 gal / 11 L of hot water into the solution tank. Do not exceed 140°F / 60°C.
   c. Add the acetic acid solution according to the mixing directions on the bottle.

FOR SAFETY: When using chemicals follow mixing and handling instructions on chemical containers.

   d. Place the machine in an area with a floor drain.
   e. Operate both cleaning technologies for one minute each.
   f. Turn the key off and let the machine sit overnight to allow the acetic acid solution to breakdown the alkaline buildup.
   g. Next day, disperse the remaining acetic acid solution and rinse the solution system with 11 liters (3 gal) of clean water.
6. Check the belt tension on the two brush motors. Tighten the belt if able to twist it more than 90° at midpoint (Figure 61).

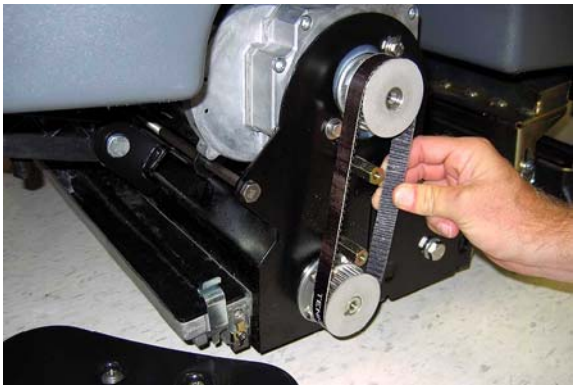

FIG. 61

FOR SAFETY: When servicing machine, disconnect the battery connections.

7. Clean the batteries and check the fluid levels (See BATTERY MAINTENANCE).
8. Check for loose or worn battery cables. Replace if worn.
9. Lubricate all pivot points with a water resistant grease.
10. Check the machine for water leaks.
11. Check the machine for loose nuts and bolts.

MOTOR MAINTENANCE

Contact an Authorized Tennant Service Center for carbon brush replacement.

Replace the carbon brushes as directed.

Carbon Brush Replacement	Hours
Propel Motor	750
Vacuum Motors	
Brush Motors	1000

⚠ WARNING: Electrical Hazard. Disconnect Battery Cables Before Servicing Machine.

BATTERY MAINTENANCE

⚠ WARNING: Fire Or Explosion Hazard. Batteries Emit Hydrogen Gas. Keep Sparks And Open Flame Away. Keep Battery Compartment Open When Charging.

FOR SAFETY: When servicing batteries, wear protective gloves and eye protection. Avoid contact with battery acid.

To prolong the life of the batteries only recharge the batteries if the machine is used for a total of 30 minutes or more. Never leave batteries discharged for lengthy periods.

1. Check battery fluid levels before and after charging. The fluid should be at the level shown (Figure 62). Add distilled water if low. DO NOT OVERFILL. The fluid will expand and may overflow when charging.

CORRECT BATTERY FLUID LEVEL:

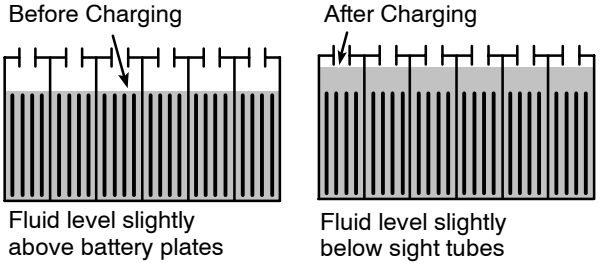

FIG. 62

2. Clean the batteries and terminals to prevent battery corrosion. Use a scrub brush with a mixture of baking soda and water (Figure 63).

ATTENTION: Do not allow the baking soda solution to enter the batteries.

FIG. 63

3. Check for loose or worn battery cables. Replace if worn.

PRIMING SOLUTION SYSTEM

To prime the machine's solution system, operate the ReadySpace technology for approximately one minute (Figure 64). Once primed, the machine can be used for restorative extraction cleaning.

If the solution system is completely dry or if you notice center streaking when restorative extraction cleaning, the solution system must be primed.

FIG. 64

MACHINE JACKING

Use the designated jacking locations for jacking up the machine (Figure 65). Empty the recovery and solution tanks before jacking. Use a jack capable of supporting the weight of the machine. Position the machine on a flat, level surface and block the tires before jacking.

FOR SAFETY: When servicing machine, jack machine up at designated locations only. Use jack or hoist that will support machine weight. Block machine up with jack stands.

FIG. 65

PUSHING, TOWING, AND TRANSPORTING MACHINE

PUSHING OR TOWING THE MACHINE

Before attempting to push or tow the machine, the brake must be disengaged. To disengage the brake, insert a small standard screwdriver between the electronic brake lever and the hub (Figure 66).

FOR SAFETY: When brake is disengaged, do not push or tow the machine on inclines.

FOR SAFETY: When brake is disengaged, do not operate machine.

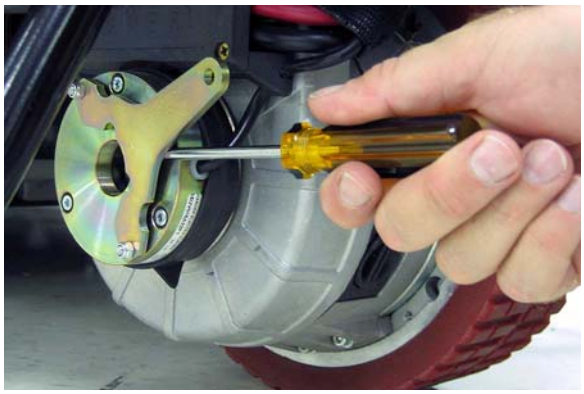

FIG. 66

Only push or tow the machine on a level surface. Do not exceed 2 mph / 3.2 kph. When towing machine, only tow it from the front by the stabilizer arms (U-shape bars).

Immediately after pushing or towing the machine, enable the brake. Never operate the machine with the brake disabled.

TRANSPORTING THE MACHINE

When transporting the machine by use of trailer or truck, carefully follow the loading and tie-down procedures:

FOR SAFETY: When transporting machine, go slowly on inclines and slippery surfaces.

1. Empty the solution tank and recovery tank.
2. Raise the scrub head to the up position.
3. Load the machine using a ramp that can support the machine weight and operator. Do not operate the machine on a ramp incline that exceeds an 11° angle (Figure 67). A winch must be used when ramp incline exceeds an 11° angle.

FOR SAFETY: When transporting machine, use a ramp that can support the machine weight and operator. Do not operate the machine on a ramp incline that exceeds an 11° angle. Use tie-down straps to secure machine to truck or trailer.

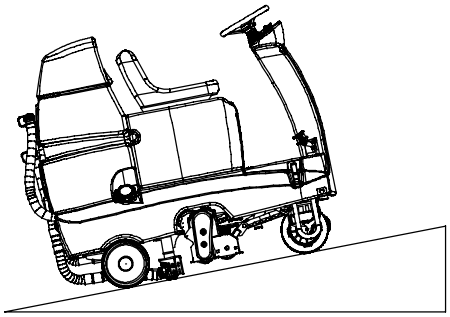

11° maximum ramp angle

FIG. 67

4. Once loaded, position the front of the machine up against the front of the trailer or truck. Lower the scrub head and turn the key off (Figure 68).
5. Place a block behind each wheel (Figure 68).
6. Secure the front and rear of the machine with tie-down straps (Figure 68). Route the front strap through the stabilizer arms (U-shape bars). Route the rear strap above the rear axle at center. It may be necessary to install tie-down brackets to the floor of your trailer or truck.

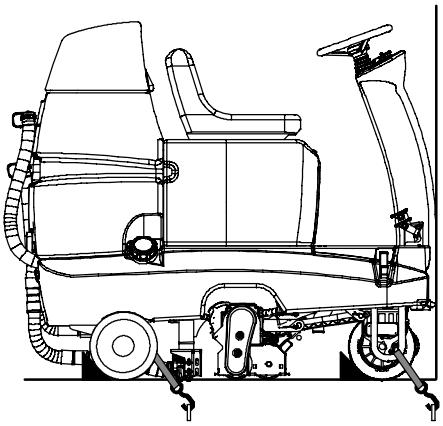

FIG. 68

NOTE: *When transporting machine in freezing temperatures see STORING MACHINE, step 5.*

STORING MACHINE

1. Charge the batteries before storing. Never store machine with discharged batteries.
2. Drain and rinse the tanks thoroughly.
3. Park the machine in a dry area with the scrub head in the raised position.
4. Open the recovery tank cover to promote air circulation.
5. If storing machine in freezing temperatures be certain to drain tanks, purge pump and remove the solution tank filter located under the machine at rear.

ATTENTION: Do not expose machine to rain, store indoors.

RECOMMENDED STOCK ITEMS

Refer to the Parts List Manual for recommended stock items. Stock Items are clearly identified with a bullet preceding the parts description. See example below:

26	1017380	(00000000-	)●	Hose, Drain, Assy, 1.5d X 29.5l, Blk,Flx
27	1008639	(00000000-	)●	Drain Assy
28	1019563	(00000000-	)●	Strap, Drain Cap
29	1008637	(00000000-	)●	O Ring, 1.48" Id, 1.76" Od

TROUBLESHOOTING

PROBLEM	CAUSE	SOLUTION
No power	Key turned off	Turn key on
	Batteries discharged	Recharge batteries
	Loose or disconnected battery cable	Secure battery cable connections
	Circuit breaker tripped	Reset 5 A circuit breaker
	Main fuse blown	Replace 100 A main fuse
Fault indicator light is on or machine is beeping	Machine fault has been detected	See FAULT INDICTOR LIGHT/BEEP CODES
Machine does not propel	Operator not seated	Operator must be seated to operate machine
	Seat sensor wire harness plug is disconnected	Connect seat sensor wire harness plug
	Faulty control board	Contact Service Center
	Faulty drive motor or wiring	Contact Service Center
	Worn carbon brushes in motor	Contact Service Center
Brush motor(s) do not operate	Low voltage interrupt activated	Recharge batteries
	Loose or broken belt	Contact Service Center
	Faulty brush motor or wiring	Contact Service Center
	Worn carbon brushes in motor	Contact Service Center
Vacuum motor(s) do not operate	Low voltage interrupt activated	Recharge batteries
	Faulty vacuum motor or wiring	Contact Service Center
	Worn carbon brushes in motor	Contact Service Center
Scrub head will not lower.	Cleaning button not pressed	Press cleaning button
	Low voltage interrupter activated	Recharge batteries
	Full recovery tank	Empty recovery tank
No solution spray or solution spray is uneven (streaking occurs)	Solution system needs priming	Prime solution system (See PRIMING SOLUTION SYSTEM)
	Scrub head not lowered	Press cleaning button to lower head
	Solution switch is turned off (Extraction Cleaning)	Turn solution switch on
	Solution tank is empty	Refill solution tank
	Clogged spray tips	Clean spray tips
	Plugged solution tank filter	Clean solution tank filter
	Clogged solution line filter	Clean solution line filter
	Faulty pump or solution solenoid	Contact Service Center
	Clogged solution line	Flush plumbing system
	Spray nozzle out of alignment	Realign spray nozzle

TROUBLESHOOTING - Continued

PROBLEM	CAUSE	SOLUTION
Poor water pickup.	Worn ReadySpace rollers	Replace rollers
	Clogged vacuum shoes	Clean vacuum shoes
	Vacuum shoe springs missing (Extraction cleaning)	Replace vacuum shoe springs
	Loose recovery tank drain hose cap	Tighten cap
	Loose or disconnected vacuum hose	Connect hose cuffs securely
	Clogged vacuum hose	Remove clogged debris
	Defective vacuum hose	Replace vacuum hose
	Recovery tank cover not down	Close cover
	Worn tank cover gasket	Replace gasket
Excessive foam/cream appears on the floor during ReadySpace cleaning	Cleaning detergents were added to solution tank	Drain and rinse out solution tank and refill with water only. Do not add cleaning detergents
	Unapproved pre-treatment detergent used	Use approved pre-treatment detergent
Short run time	Low battery charge	Charge batteries
	Batteries need maintenance	See BATTERY MAINTENANCE.
	Faulty charger	Repair or replace battery charger
Spray nozzles drip when not in use	Clogged spray tip filter/check valve (Restorative Extraction spray tips)	Clean or replace spray tip filter
(See SOLUTION FLOW DIAGRAM for reference)	Clogged or faulty solution solenoid.	Clean or replace solution solenoid

MACHINE SPECIFICATIONS

MODEL	R-14
Length	61.5 in / 1,560 mm
Width	32 in / 813 mm
Height	52 in / 1,325 mm
Minimum Aisle Turn	64 in / 1,630 mm
Weight - less batteries	835 lb / 380 kg
Weight - with batteries	1,225 lb / 560 kg
Solution tank capacity	32 gal / 121 L
Recovery tank capacity	28 gal / 106 L
Cleaning path width	27.5 in / 700 mm
Productivity rate (max)	ReadySpace cleaning-theoretical: 13,000 ft^2/hr / 1,208 m^2/hr
	ReadySpace cleaning-estimated actual: 10,000 ft^2/hr / 929 m^2/hr
	Restorative extraction cleaning-theoretical: 7,500 ft^2/hr / 697 m^2/hr
	Restorative extraction cleaning-estimated actual: 5,000 ft^2/hr / 465 m^2/hr
Travel speed	Transport forward: 290 ft/min / 88 m/min
	Transport reverse: 175 ft/min / 53 m/min
	ReadySpace cleaning - standard: 100 ft/min / 30 m/min
	ReadySpace cleaning - maximum: 150 ft/min / 46 m/min
	Restorative extraction cleaning - standard: 50 ft/min / 15 m/min
	Restorative extraction cleaning - maximum: 75 ft/min / 23 m/min
Maximum rated climb	Transporting (empty tanks): 11° angle / 19.25% grade
	Cleaning: 6° angle / 10.5% grade
Propel motor	Transaxle, 24 V, 62 A, 1.57 hp / 1153 kW
Brush motor	Two 24 V, 20 A, .54 hp / 0.40 kW
Brush/roller speed	270 rpm
Solution pump	24 V, 5 A, 1.3 gpm / 4.9 L/min, 250 psi / 17.25 bar
Solution pressure/spray rate	ReadySpace Cleaning: 30 psi / 2 bar at spray tips, 0.33 gal/min / 1.25 L/min
	Restorative extraction cleaning: 52 psi / 3.6 bar at spray tips, 1.24 gal/min / 4.69 L/min
Vacuum motor	Two 24 V, 23 A, .86 hp / 0.64 kW
Water lift-air flow	ReadySpace cleaning: 23.4 in / 594.4 mm - 55 cfm / 26 L/sec
	Restorative extraction cleaning: 59.4 in / 1,509 mm - 6.5 cfm 3.1 L/sec
Voltage DC	24 VDC
Total power consumption	ReadySpace cleaning: 60 A nominal
	Restorative extraction cleaning: 65 A nominal
Battery capacity	Four 6 V, 335 Ah/20 hr rate
Maximum run time	2.5 hours*
Battery charger	120 VAC, 60 Hz, 24 VDC, 30 A output
Decibel rating at operator ear, indoors	73 dBA**

* Run times are based on Continuous Scrubbing Run Times.

** Sound pressure (ISO 11201) as recommended by the American Association of Cleaning Equipment Manufacturers (AACEM) and OSHA.

Specifications are subject to change without notice.

MACHINE DIMENSIONS

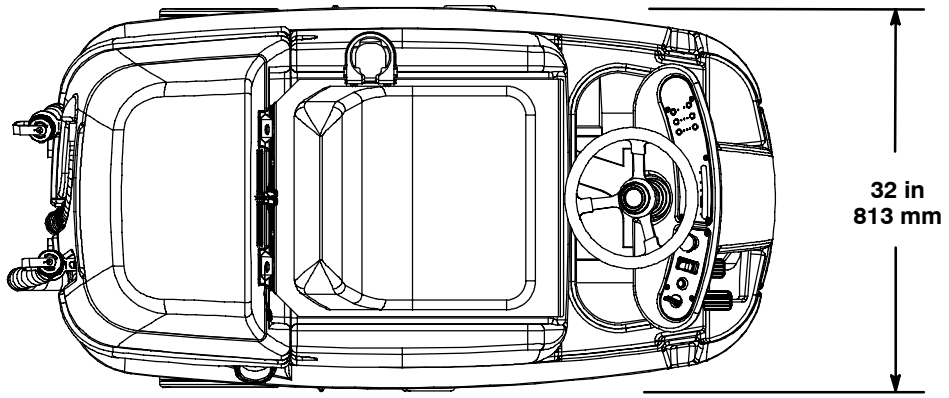

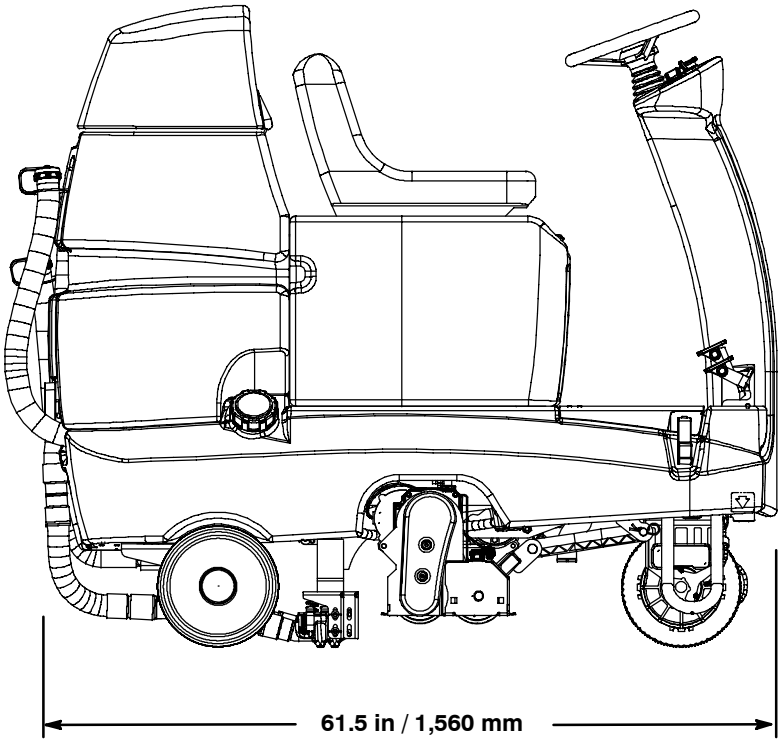

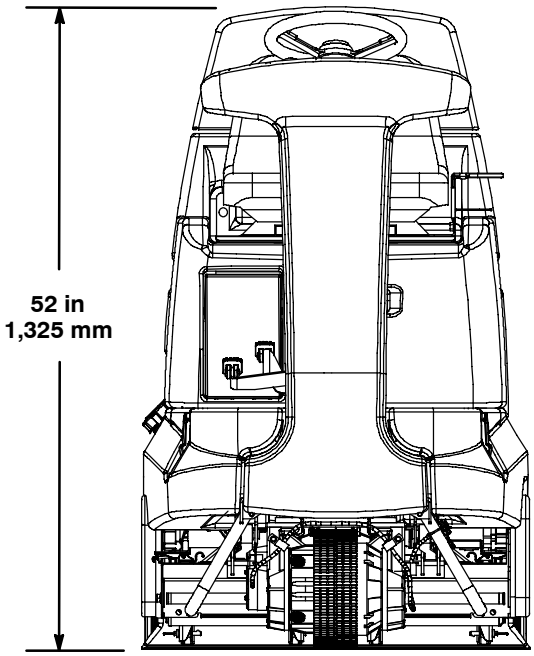
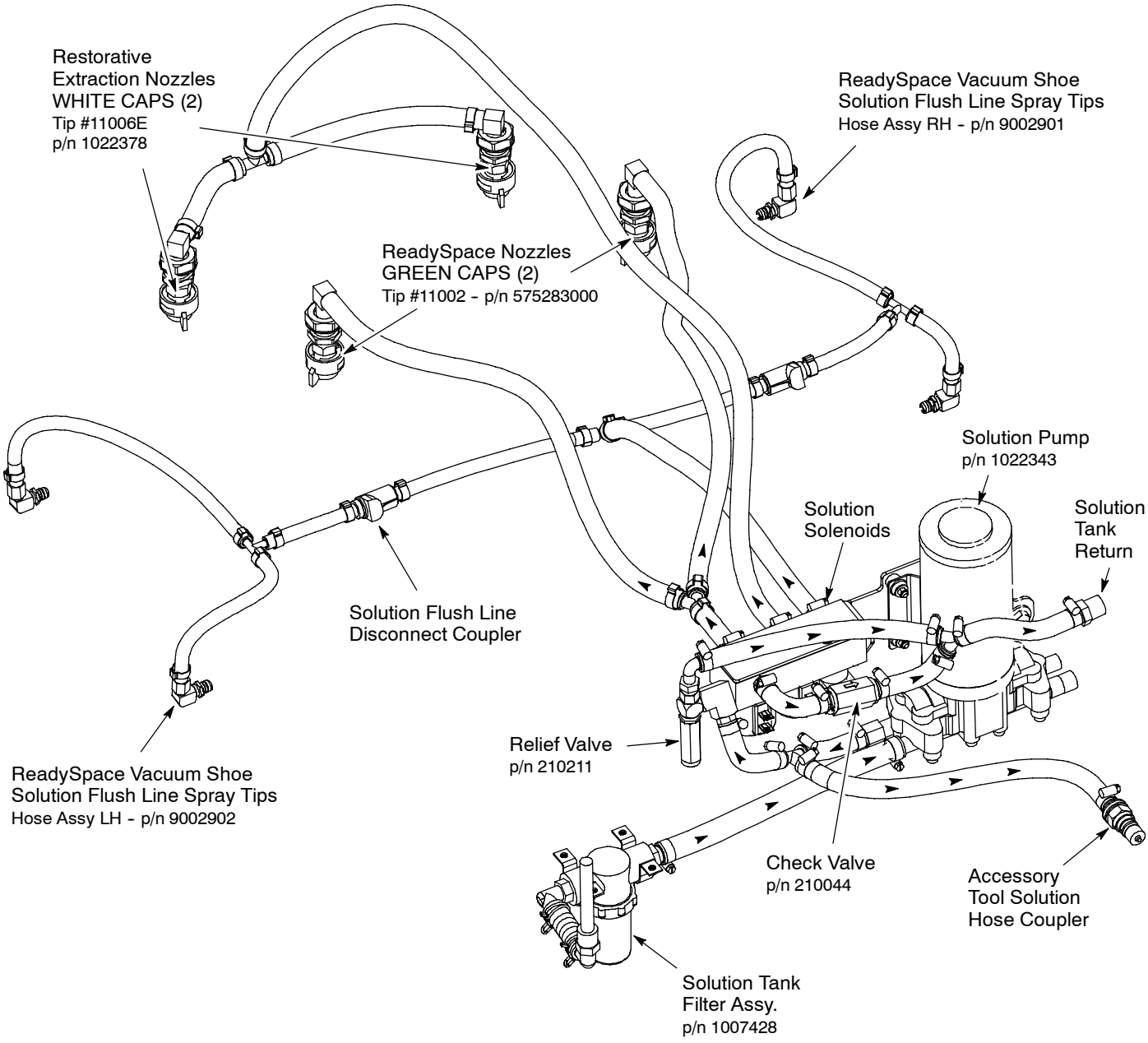
SOLUTION FLOW DIAGRAM