6100
(Battery)

Rider Sweeper Parts Manual

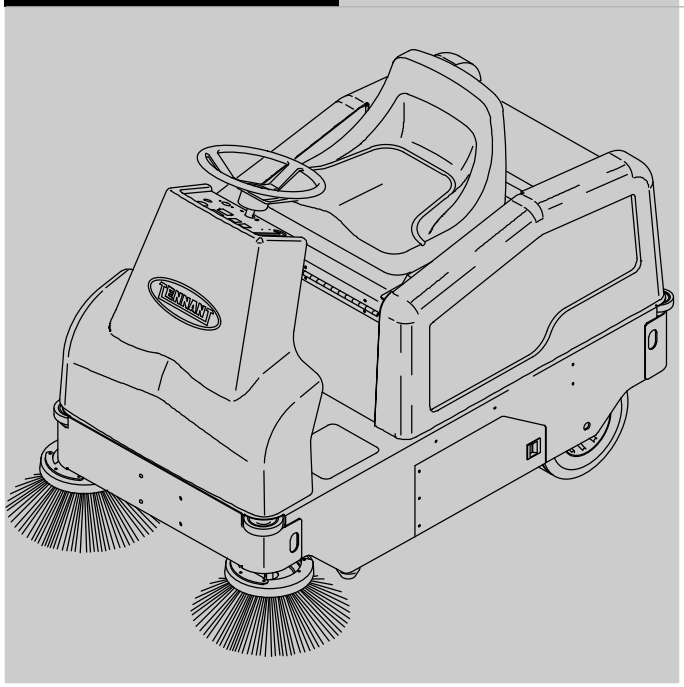

VCS® Filter Shaker
Tennant*True®* *Parts*
***IRIS®* a Tennant Technology**

North America / International

For the latest Parts manuals and other language Operator manuals, visit:

www.tennantco.com/manuals

9014885
Rev. 02 (5-2021)

When ordering replacement parts, use the illustrated parts list section in this manual. Before ordering parts or supplies, be sure to have your machine model number and serial number available. Only use TENNANT Company supplied or equivalent parts. Parts and supplies may be ordered online, by phone, or mail from any authorized parts and service center, distributor or from any of the manufacturer's subsidiaries.

This machine will provide excellent service. However, the best results will be obtained at minimum costs if:

- The machine is operated with reasonable care.
- The machine is maintained regularly - per the machine maintenance instructions provided.
- The machine is maintained with manufacturer supplied or equivalent parts.

MACHINE DATA

Please fill out at time of installation for future reference.

Model No. – _____

Serial No. – _____

Machine Options – _____

Sales Rep. – _____

Sales Rep. phone no. – _____

Customer Number – _____

Installation Date – _____

Tennant Company
10400 Clean Street
Eden Prairie, MN 55344–2650
Phone: (800) 553–8033 or (763) 513–2850
www.tennantco.com

InstantAccess, Quick Mop, and VCS are trademarks of Tennant Company.

Hydrolink is a registered trademark of Trojan® Battery Company.

Specifications and parts are subject to change without notice.

Copyright © 2016, 2018, 2021 TENNANT Company, Printed in U.S.A.

HOW TO USE THIS MANUAL

This section on *HOW TO USE THIS MANUAL* will tell you how to:

- Find important machine information for ordering correct repair parts.
- Find TENNANT part numbers.
- Order TENNANT parts and supplies.

IMPORTANT INFORMATION

When placing an order for parts, the machine model and machine serial number are important. Refer to the *MACHINE DATA* box which is filled out during the installation of your machine. The *MACHINE DATA* box is located on the inside of the front cover of this manual.

MACHINE DATA

Please fill out at time of installation for future reference.

Machine Model Number –7200

Machine Serial Number – _____

Machine Options – _____

TENNANT Representative/phone no. – _____

Customer ID Number – _____

Date of Installation – _____

Manual Number –330040

Revision: 00

Published: 05–97

The model number of your machine is on the side of the machine.

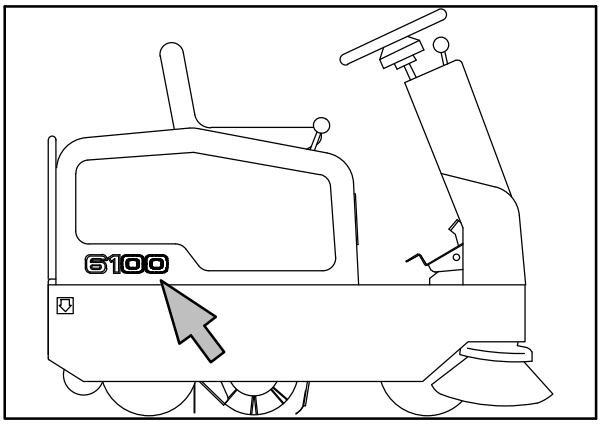

The serial number of your machine is printed on the machine data plate located as shown.

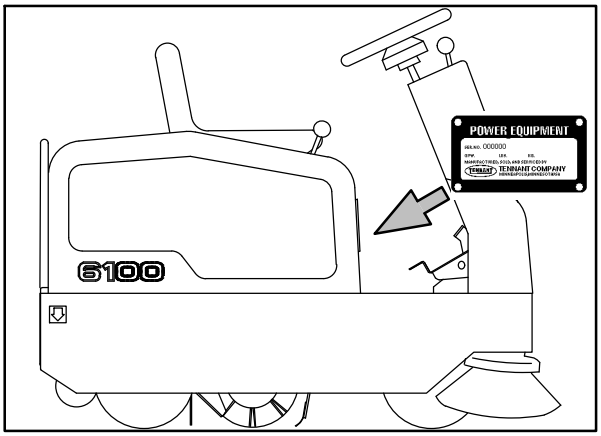

FINDING A TENNANT PART NUMBER

This manual contains the following sections:

- HOW TO USE THIS MANUAL
- STANDARD PARTS
- OPTIONS
- BREAKDOWNS
- CROSS REFERENCE

The STANDARD PARTS section lists repair parts for standard machines. They are grouped in this general order:

- General wear parts.
- Machine frame and related parts.
- Machine propelling system.
- Sweeping components.
- Electrical parts.

The OPTION section lists repair parts of options.

The BREAKDOWN section lists available repair parts of major components.

All sections in this manual consist of parts illustrations and corresponding parts lists.

The parts illustrations are numbered with ***Ref*** numbers which refer to corresponding parts lists.

The parts lists include a number of columns of information:

- ***Ref*** – column refers to the reference number on the parts illustration.
  ▽ – indicates the part is an assembly.
  ▲ – indicates the part is included in the assembly listed just before it.

- ***Part No.*** – column lists the TENNANT part number for the part.

- ***Serial Number*** – column indicates the set of machines the part number is applicable to. Serial numbers change when the machine design has been modified. The most current design of the machine is shown in the main illustration, older designs are boxed in a corner of the illustration.

- ***Description*** – column is a brief description of the part.

- ***Qty.*** – column lists the quantity of that part used in that area of the machine.

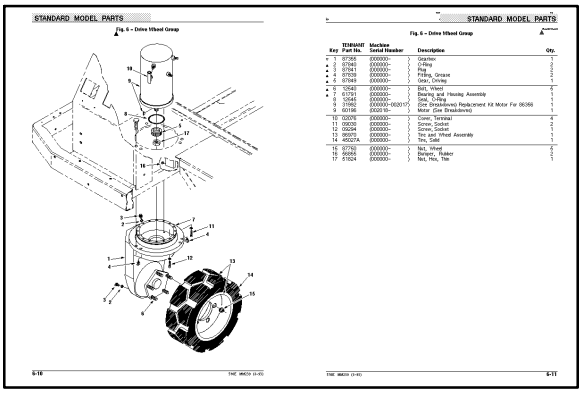

	Key	TENNANT Part No.	Machine Serial Number	Description	Qty.
▽	1	87355	(000000–)	Gearbox	1
▲	2	87840	(000000–)	O-Ring	2
▲	3	87841	(000000–)	Plug	2
▲	4	87839	(000000–)	Fitting, Grease	2
▲	5	87849	(000000–)	Gear, Driving	1
▲	6	12540	(000000–)	Bolt, Wheel	5
▲	7	61791	(000000–)	Bearing and Housing Assembly	1
	8	12545	(000000–)	Seal, O-Ring	1
	9	31992	(000000–002017)	(See Breakdowns) Replacement Kit Motor For 86356	1
	9	60196	(002018–)	Motor (See Breakdowns)	1
	10	02076	(000000–)	Cover, Terminal	4
	11	09030	(000000–)	Screw, Socket	2
	12	09294	(000000–)	Screw, Socket	1
	13	86970	(000000–)	Tire and Wheel Assembly	1
	14	45027A	(000000–)	Tire, Solid	1
	15	87750	(000000–)	Nut, Wheel	5
	16	56855	(000000–)	Bumper, Rubber	2
	17	51824	(000000–)	Nut, Hex, Thin	1

	Key	TENNANT Part No.	Machine Serial Number	Description	Qty.
▽	1	87355	(000000–)	Gearbox	1
▲	2	87840	(000000–)	O-Ring	2
▲	3	87841	(000000–)	Plug	2
▲	4	87839	(000000–)	Fitting, Grease	2
▲	5	87849	(000000–)	Gear, Driving	1
▲	6	12540	(000000–)	Bolt, Wheel	5
▲	7	61791	(000000–)	Bearing and Housing Assembly	1
	8	12545	(000000–)	Seal, O-Ring	1
	9	31992	(000000–002017)	(See Breakdowns) Replacement Kit Motor For 86356	1
	9	60196	(002018–)	Motor (See Breakdowns)	1
	10	02076	(000000–)	Cover, Terminal	4
	11	09030	(000000–)	Screw, Socket	2
	12	09294	(000000–)	Screw, Socket	1
	13	86970	(000000–)	Tire and Wheel Assembly	1
	14	45027A	(000000–)	Tire, Solid	1
	15	87750	(000000–)	Nut, Wheel	5
	16	56855	(000000–)	Bumper, Rubber	2
	17	51824	(000000–)	Nut, Hex, Thin	1

NOTE: If a service kit is installed on your machine, be sure to keep the INSTRUCTION BULLETIN which came with the kit. It contains repair parts numbers needed for ordering future parts.

NOTE: Fasteners used in this machine may be metric or non-metric. Take care when replacing hardware to replace with same thread size.

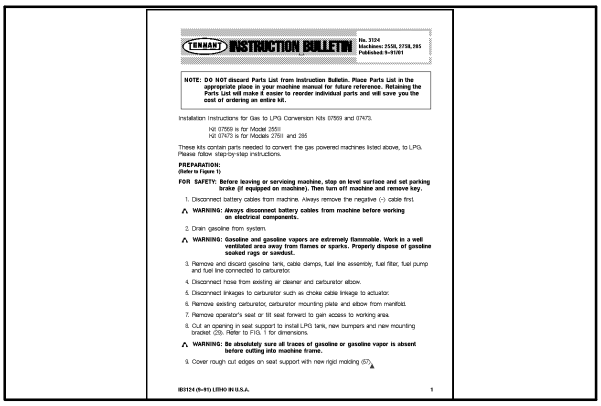

TENNANT INSTRUCTION BULLETIN

No. 3124
Machines: 255B, 275B, 285
Published: 9-01/01

NOTE: DO NOT discard Parts List from Instruction Bulletin. Place Parts List in the appropriate place in your machine manual for future reference. Retaining the Parts List will make it easier to reorder individual parts and will save you the cost of ordering an entire kit.

Installation Instructions for Gas to LPG Conversion Kits 07569 and 07473.

Kit 07569 is for Model 255B
Kit 07473 is for Models 275B and 285

These kits contain parts needed to convert the gas powered machines listed above, to LPG. Please follow step-by-step instructions.

PREPARATION:
(Refer to Figure 1)

FOR SAFETY: Before leaving or servicing machine, stop on level surface and set parking brake (if equipped on machine). Then turn off machine and remove key.

1. Disconnect battery cables from machine. Always remove the negative (-) cable first.

WARNING: Always disconnect battery cables from machine before working on electrical components.

2. Drain gasoline from system.

WARNING: Gasoline and gasoline vapors are extremely flammable. Work in a well ventilated area away from flames or sparks. Properly dispose of gasoline soaked rags or sawdust.

3. Remove and discard gasoline tank, cable clamps, fuel line assembly, fuel filter, fuel pump and fuel line connected to carburetor.
4. Disconnect hose from existing air cleaner and carburetor elbow.
5. Disconnect linkages to carburetor such as choke cable linkage to actuator.
6. Remove existing carburetor, carburetor mounting plate and elbow from manifold.
7. Remove operator's seat or tilt seat forward to gain access to working area.
8. Cut an opening in seat support to install LPG tank, new bumpers and new mounting bracket (23). Refer to FIG. 1 for dimensions.

WARNING: Be absolutely sure all traces of gasoline or gasoline vapor is absent before cutting into machine frame.

9. Cover rough cut edges on seat support with new rigid molding (57).

IB3124 (9-01) LIBHO IN U.S.A. 1

PLACING AN ORDER

Orders may be placed by phone, fax, or by mail. Phone orders may need written confirmation. Follow the steps below to insure prompt delivery:

1. Identify the model number of your machine.
2. Identify the serial number of your machine.
3. Find the part number of the part you need. Do not order by page number or reference number. If you are not able to find the part number, call your TENNANT representative for help or send the old part as a sample.
4. Determine the quantity of the part you need.
5. Provide the following company information:
   - Company name
   - Customer ID Number
   - Shipping address
   - Billing address
   - First and last name of person ordering parts
   - Telephone number
   - Purchase order number
6. Provide definitive shipping instructions.

8–1998Any claim for loss or damage to a shipment in transit should be filed promptly with the transportation company making the delivery. Shipments will be complete unless the packing list or order acknowledgement indicates items back ordered.

If parts received are suspected to be incorrect or defective, please contact the TENNANT representative from whom you ordered the part. They will give authorization for return and/or handle replacement shipments when required.

SECTION 2

Contents **Page**

Fig. 1 – General Recommended Maintenance Items 2-3
Fig. 2 – Replacement Brushes 2-5
Fig. 3 – Main Frame Group 2-6
Fig. 4 – Seat and Shroud Group 2-8
Fig. 5 – Steering Group 2-10
Fig. 6 – Instrument Panel Group 2-12
Fig. 7 – Electrical Panel Group 2-14
Fig. 8 – Electrical Panel Group (007119–) 2–16
Fig. 9 – Front Wheel Pivot Group (000000–002362) 2–18
Fig. 10 – Front Drive Wheel Group (000000–002362) 2–20
Fig. 11 – Front Drive Wheel Group (002363–) 2–22
Fig. 12 – Front Brake Linkage Group (000000–002362) 2–24
Fig. 13 – Front Brake Linkage Group (002363–002651) 2–26
Fig. 14 – Front Brake Linkage Group (002652–) 2–28
Fig. 15 – Directional Pedal Group 2–30
Fig. 16 – Rear Wheel Group 2–32
Fig. 17 – Brake Pedal Group 2–34
Fig. 18 – Main Brush Skirts Group 2–36
Fig. 19 – Main Brush Front Flap Group 2–38
Fig. 20 – Main Brush Idler Group 2–40
Fig. 21 – Main Brush Drive Group 2–42
Fig. 22 – Side Brush Lift Group 2–44
Fig. 23 – Side Brush Lift Group (Japan Only) . . 2–46
Fig. 24 – Side Brush Motor Group 2–48
Fig. 25 – Side Brush Motor Group (Japan Only) 2–50
Fig. 26 – Vacuum Fan Group 2–52
Fig. 27 – Vacuum Fan Box Group 2–54
Fig. 28 – Hopper Group 2–56
Fig. 29 – Filter Shaker Group 2–58
Fig. 30 – Battery Group 2–60
Fig. 31 – Electrical Schematic (000000–002014) 2–62
Fig. 32 – Electrical Schematic (002015–005103) 2–64
Fig. 33 – Electrical Schematic (005104–) 2–66
Fig. 34 – Wire Harnesses Group 2–68
Fig. 35 – Label Group 2–78

E

Fig. 1 – General Recommended Maintenance Items

	Ref.	Part No.	Serial Number	Description	Qty.
		83189	(000000–)	Knob Assy	1
▽		83119	(000000–)	Skirt Kit, Replmt [6100]	1
▲		81748	(000000–)	Skirt, Side, Left Hand	1
▲		81715	(000000–)	Skirt, Side, Right Hand	1
▲		81727	(000000–)	Skirt, Recirculation	1
▲		83117	(000000–)	Skirt, Side	2
▲		81740	(000000–)	Skirt, Front	1
▲		81726	(000000–)	Skirt, Recirculation	1
▽		83039	(000000–)	Seal Kit, Hopper, 6100	1
▲		81965	(000000–)	Seal, Bulb .50 X .50 X 9.19Lg	2
▲		83115	(000000–)	Seal, Foam, Extrusion 23.5	1
▲		81966	(000000–)	Seal, Bulb .38 X .75 X 22.62Lg	1
▽		83038	(000000–)	Kit, Replmt, Bearing, Vacuum Fan, [6100]	1
▲		81838	(000000–)	Housing, Bearing	1
▲		81830	(000000–)	Bearing, Ball	2
▲		1039403	(000000–)	Shaft, Drive, Vacfan, .66d 03.4l	1
▲		23524–1	(000000–)	Ring, Retaining, Ext, 0.38d, [Selflock]	1
		384432	(000000–)	Belt, V 3L520	1
		81899	(000000–)	Belt, 3V	1
		83420	(000000–)	Brake Kit, Disc	1
		1067452	(000000–)	Bag, Vacuum, Paper [1pick=1pkg of 10bag]	1
		83289	(000000–)	Hose, Flex	1
		1037209AM	(000000–)	Filter, Panl, Dust, 4.2 X 13.3 X 21.0	1
▽		383718	(000000–)	Kit, Perf, Sweeper, [6100e]	1
▲		83189	(000000–)	Kit, Replmt, Knob Assy, [6100]	2
▲▽		83038	(000000–)	Kit, Replmt, Bearing, Vacuum Fan, [6100]	1
▲▲		81838	(000000–)	Housing, Brg, Vacfan	1
▲▲		81830	(000000–)	Bearing, Ball, 0.47b 1.26d 0.39w	2
▲▲		1039403	(000000–)	Shaft, Drive, Vacfan, .66d 03.4l	1
▲▲		23524–1	(000000–)	Ring, Retaining, Ext, 0.38d, [Selflock]	1
▲		83420	(000000–)	Kit, Replmt, Stator Assy, Brake, Disc	1
▲		81899	(000000–)	Belt, V, [3v] 32.9l	1
▲		384432	(000000–)	Belt, V, 3l 52.0l	1
▲		83050	(000000–)	Belt, Synchronous, 25mm 05p 500l [Gt]	1
▲		83053	(000000–)	Chain, Roller, #40, 056 Pitches, O–Ring	1
▲		1037209AM	(000000–)	Filter, Panl, Dust, 4.2 X 13.3 X 21.0	1
▲		81748	(000000–)	Skirt, Side, Lh	1
▲		08712	(000000–)	Nut, Hex, Lock, M06 X 1.0, Nl, Ss	15
▲		81715	(000000–)	Skirt, Side, Rh	1
▲		81727	(000000–)	Skirt, Recirculation, Rear	1
▲		361339	(000000–)	Screw, Hex, M06 X 1.0 X 16, Fmg	14
▲		222159	(000000–)	Screw, Hex, M06 X 1.0 X 25, Fmg	1
▲		81725	(000000–)	Skirt, Recirculation	1
▲		360821	(000000–)	Screw, Flt, M08 X 1.25 X 16, 10.9	4
▲		81726	(000000–)	Skirt, Recirculation, Front	1
▲		81740	(000000–)	Skirt, Front	1
▲		83117	(000000–)	Skirt, Side	2

E

Fig. 1 – General Recommended Maintenance Items

	Ref.	Part No.	Serial Number	Description	Qty.
▲		30013	(000000–)	Washer, Flat, .31 Fender	4
▲		223470	(000000–)	Screw, Btn, M08 X 1.25 X 25, Ss	2
▲		08713	(000000–)	Nut, Hex, Lock, M08 X 1.25,Nl, Ss	2
▲		81965	(000000–)	Seal, Bulb, .50th, .50w X 09.19l	2
▲		83115	(000000–)	Seal, Bulb, Str, 0.76h .93w 23.5l Adh	1
▲		81966	(000000–)	Seal, Bulb, Str, .38th, 0.75w X 22.6l	1
▽		398329	(000000–)	Kit, Maint, 800hr [6100 E]	1
▲		83189	(000000–)	Kit, Replmt, Knob Assy, [6100]	1
▲		83119	(000000–)	Skirt Kit, Replmt [6100]	1
▲		83039	(000000–)	Kit, Seal, Hppr [6100]	1
▲▽		83038	(000000–)	Kit, Replmt, Bearing, Vacuum Fan, [6100]	1
▲▲		81838	(000000–)	Housing, Brg, Vacfan	1
▲▲		81830	(000000–)	Bearing, Ball, 0.47b 1.26d 0.39w	2
▲▲		1039403	(000000–)	Shaft, Drive, Vacfan, .66d 03.4l	1
▲▲		23524–1	(000000–)	Ring, Retaining, Ext, 0.38d, [Selflock]	1
▲		83420	(000000–)	Kit, Replmt, Stator Assy, Brake, Disc	1
▲		384102	(000000–)	Belt, V, [3l] 50.0l	1
▲		383861	(000000–)	Belt, V, [3l] 33.9l	1
▲		1037209AM	(000000–)	Filter, Panl, Dust, 4.2 X 13.3 X 21.0	1
		16411	(000000–)	Paint, Airdry, Off–white, 12oz	1
		16412	(000000–)	Paint, Airdry, Teal, 12oz, Solid	1
		377540	(000000–)	Paint, Airdry, Blk, 12oz	1
		377538	(000000–)	Paint, Airdry, Gray, 12oz [Enamel]	1
		377537	(000000–)	Paint, Airdry, Iron Gray,12oz[Pwdr Coat]	1

Fig. 2 – Replacement Brushes

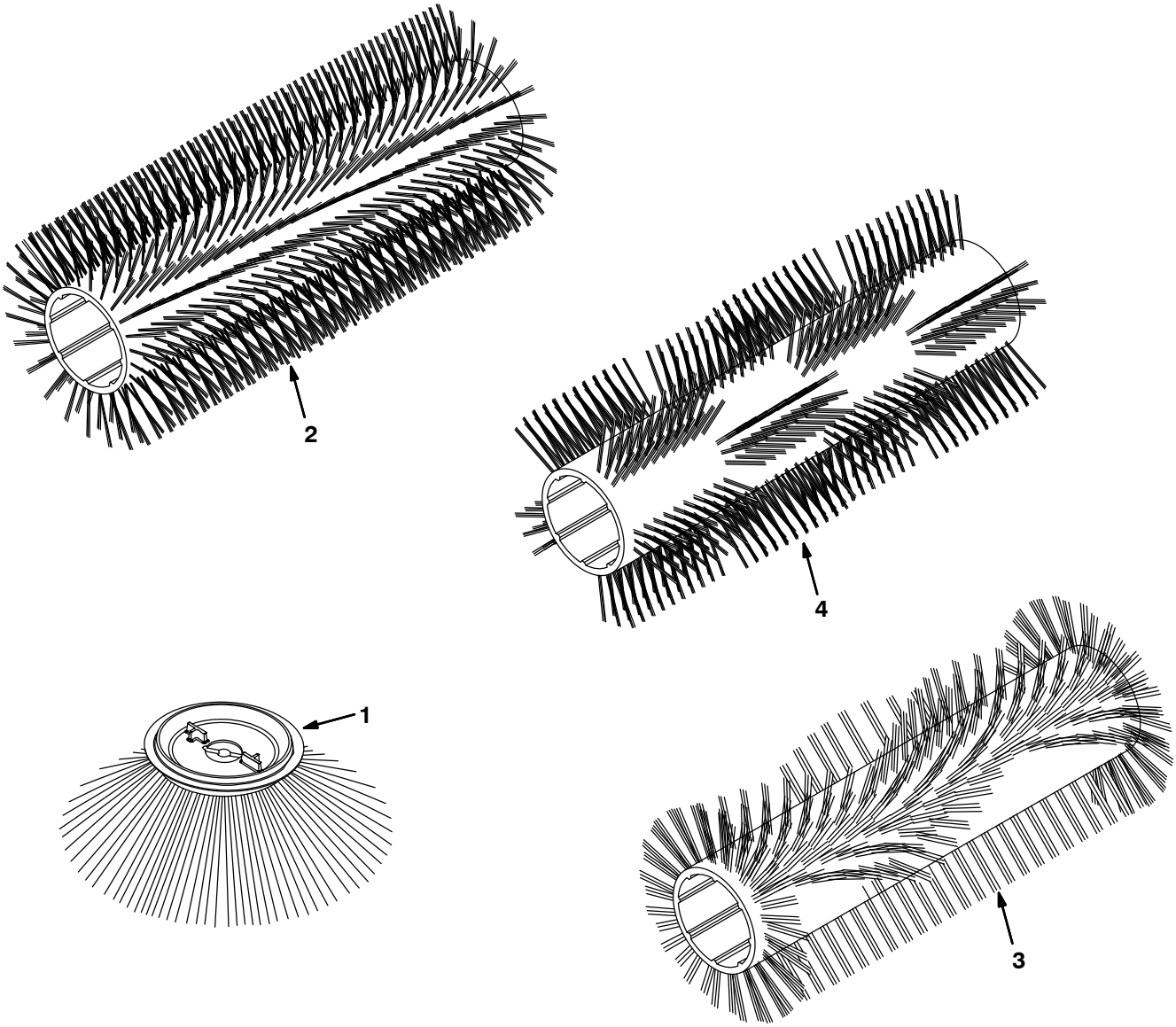

353517–ALL

Ref.	Part No.	Serial Number	Description	Qty.
1	80042	(000000–)	Brush, Disk, Swp, Polypropylene	1
1	384473	(000000–)	Brush, Disk, Swp, Polypropylene	1
1	378804	(000000–)	Brush, Disk, Swp, Heavy Duty, Polypropylene	1
2	81888	(000000–)	Brush, Swp, Polypropylene, Spiral	1
2	83031	(000000–)	Brush, Swp, Natural Fiber, Spiral	1
3	83030	(000000–)	Brush, Swp, Wedge, Polypropylene, Spiral	1
4	370048	(000000–)	Brush, Swp, Window, Polypropylene, Spiral	1

Fig. 3 – Main Frame Group

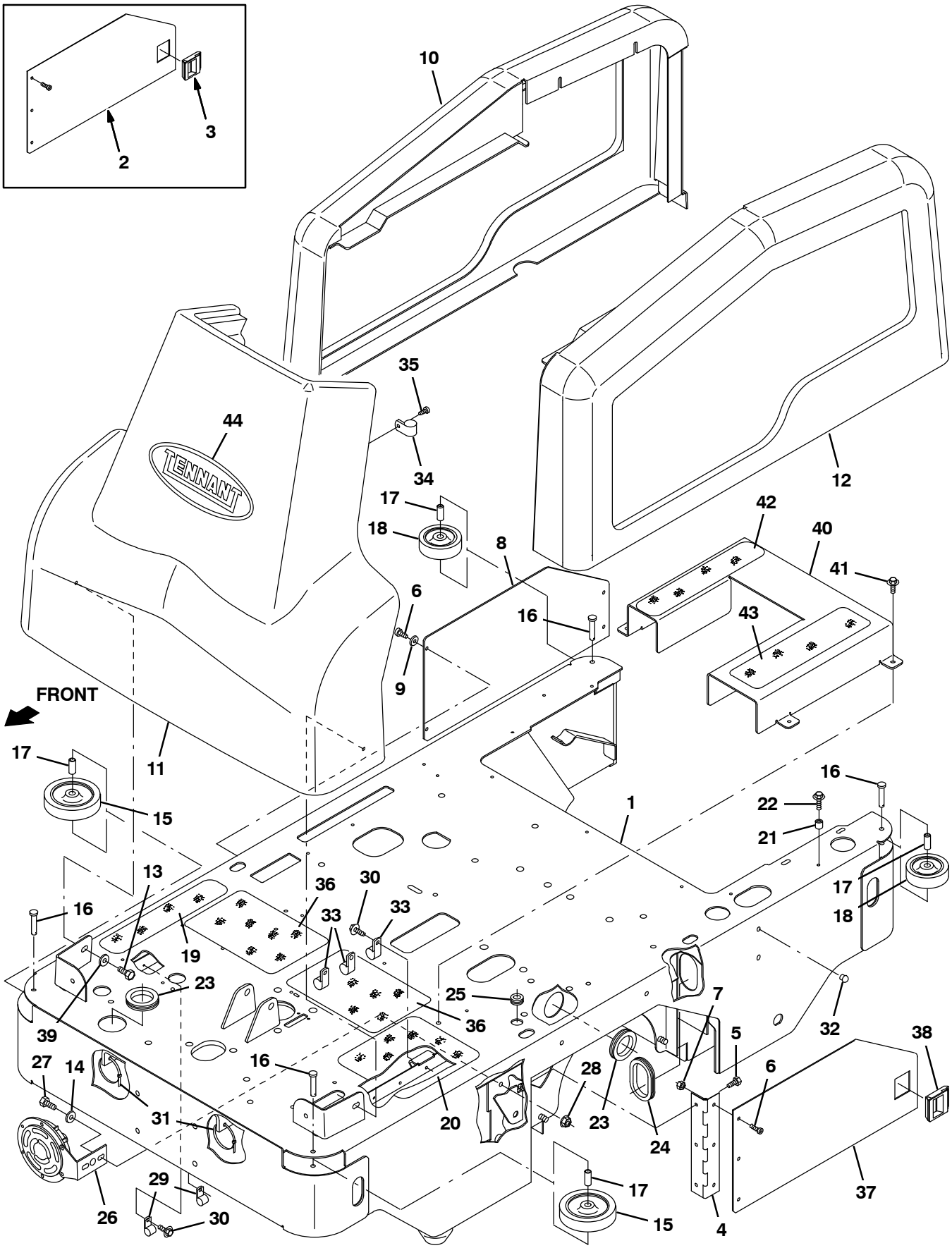

353193 – E

Fig. 3 – Main Frame Group

Ref.	Part No.	Serial Number	Description	Qty.
1	81601	(000000–008000)	Frame, Wldt, Main, Swpr	1
1	1076981	(008001–)	Frame, Wldt, Main [Gray]	1
2	384426	(000000–001469)	Kit, Door, Brush	1
3	81855	(000000–001469)	Latch	1
4	81721	(000000–)	Hinge	1
5	87308	(000000–)	Screw, Hex, M06–1.0 X 12, 8.8	3
6	363503	(000000–)	Screw, Pan, M06–1.0 X 12, Ss	7
7	08712	(000000–)	Nut, Hex, Lock, M06–1.0, Nl,Ss	6
8	81779	(000000–008000)	Plate, Door, Brush	1
8	1076983	(008001–)	Plate, Door, Brush, Rh [Gray]	1
9	32483	(000000–)	Washer, Flat, .25 Sae	4
10	83155	(000000–008000)	Shroud, R.H.	1
10	1076992	(008001–)	Cover, Side, Rh [Teal]	1
11	83157	(000000–008000)	Shroud, Front, 6100	1
11	1076993	(008001–)	Cover, Front [Teal]	1
12	83154	(000000–008000)	Shroud, L.H.	1
12	1076991	(008001–)	Cover, Side, Lh [Teal]	1
13	16735	(000000–)	Screw, Hex, M08–1.25 X 16, 8.8	4
14	32491	(000000–)	Washer, Flat, .31 Hard	3
15	81580	(000000–)	Wheel, Bumper, 4 In Dia	2
16	81581	(000000–)	Pin, Clevis, .31 Dia X 1.75 Lg	4
17	383910	(000000–)	Sleeve, P/M, 0.437d 0.318b 1.06l 430ss	4
18	81582	(000000–)	Wheel, Bumper 3.0 Od	2
19	82839	(000000–)	Tread, Non–Skid, 02.2w 11.5l	1
20	16368	(000000–)	Tread, Non–Skid, 07.0w 08.0l	1
21	222460	(000000–)	Sleeve	1
22	222159	(000000–)	Screw, Hex, Fmg, M06–1.0 X 25	1
23	54345	(000000–)	Grommet, Rubber	2
24	62595–16	(000000–)	Molding, Trim 11–14Ga 8.50	1
25	10632–9	(000000–)	Grommet, Rubber	1
26	369702	(000000–)	Horn	1
27	16931	(000000–)	Screw, Hex, M08–1.25 X 20, 8.8	1
28	07791	(000000–)	Nut, Hex, Flange, M08–1.25	1
29	26395–1	(000000–)	Clamp, Cable	2
30	361339	(000000–)	Screw, Hex 6X 1.0 16 Pltd	5
31	49266	(000000–)	Tie, Cable 1.75D Max 7.50Lg	2
32	01314	(000000–)	Button, Plug	6
33	40678–1	(000000–)	Clamp, Cable	3
34	56094	(000000–)	Clamp, Strap	2
35	360973	(000000–)	Scr–Pan 12 X .50 F/Plst Pl	2
36	32646	(000000–)	Tread, Floor, Non–Skid, 06.0w X 09.0l (NA Only)	2
37	384416	(001470–008000)	Plate, Door, Brush	1
37	1076982	(008001–)	Plate, Door, Brush, Lh [Gray]	1
38	384423	(001470–)	Latch	1
39	1017218	(000000–)	Washer, Flat, 0.321b 1.00d .12, Ss	2
40	81696	(000000–008000)	Channel, Step (Japan Only)	1
40	1077027	(008001–)	Channel, Step, TJ [Gray] (Japan Only)	1
41	74455	(000000–)	Screw, Hex, Fmg, M06–1.0 X 12 (Japan Only)	4
42	82839	(000000–)	Tread, Non–Skid, 02.2w 11.5l (Japan Only)	1
43	58819	(000000–)	Tread, Non–Skid, 03.0w 11.6l (Japan Only)	1
44	1047741	(008001–)	Label, Logo, 10.5l White / Tl [Tennant]	1

Fig. 4 – Seat and Shroud Group

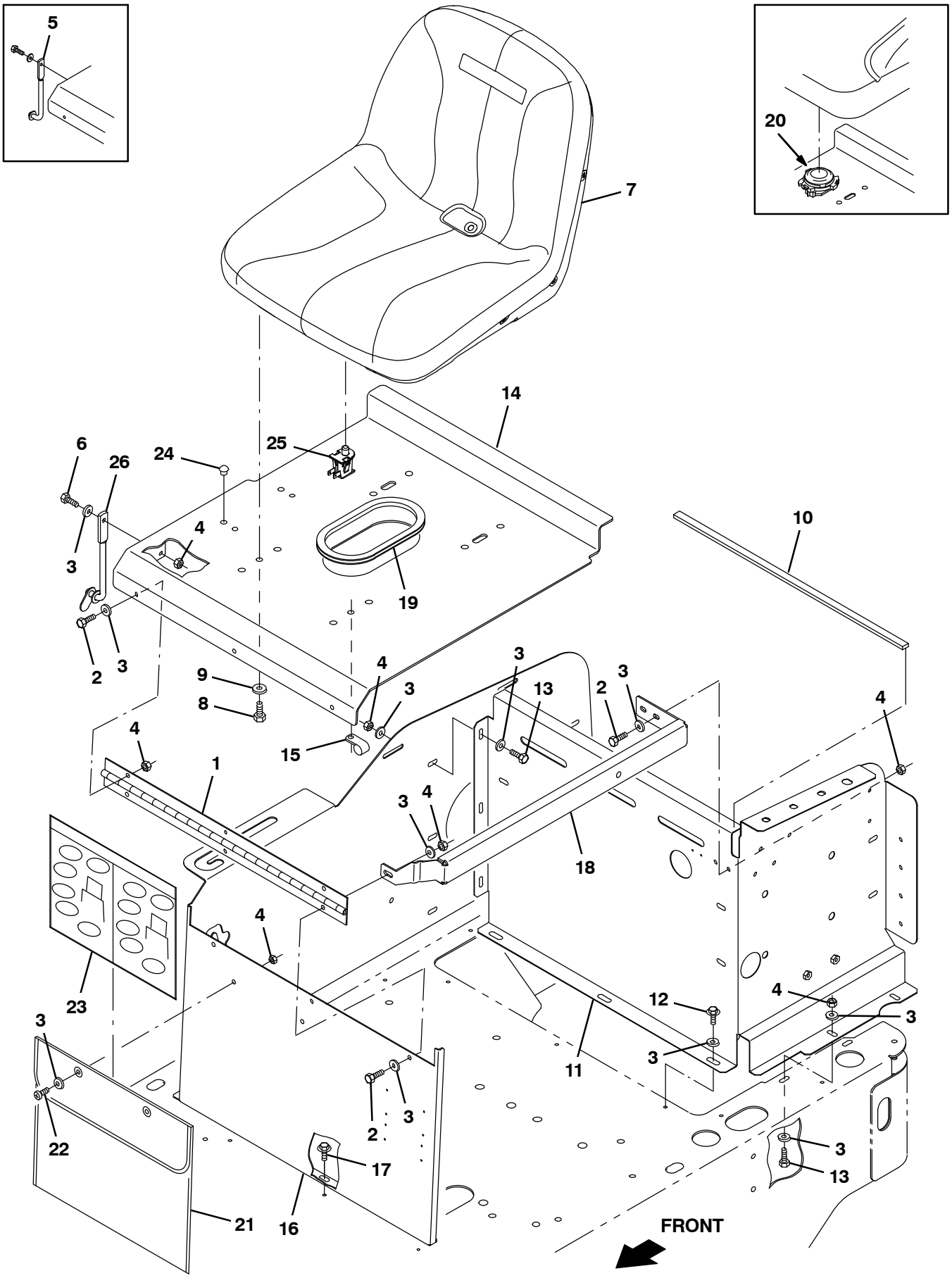

352103 - E

Fig. 4 - Seat and Shroud Group

Ref.	Part No.	Serial Number	Description	Qty.
1	81902	(000000-)	Hinge, Seat Support	1
2	06942	(000000-)	Screw, Hex, M06- 1.0 X 16, 8.8	8
3	32490	(000000-)	Washer, Flat, .25 Hard	26
4	08708	(000000-)	Nut, Hex, Lock, M06- 1.0, Nl	17
5	223080	(000000- 006789)	Arm Wldt, Safety, Sppt, Seat, .38d 06.5d	1
6	06943	(000000-)	Screw, Hex, M06- 1.0 X 20, 8.8	1
7	9005082	(000000- 005308)	Seat Kit, Std, Replmt	1
7	1201894	(005309-)	Seat, Std [Milsco]	1
8	54396	(000000- 004016)	Screw, Hex, .31- 18 X 0.75, G5	4
8	76955	(004017-)	Screw, Hex, .31- 18 X 1.00, G5	4
9	32491	(000000-)	Washer, Flat, .31 Hard	4
10	1063907	(000000-)	Seal, Afmkt, Rbr, Clsd, Adh, 03ft	1
11	81874	(000000- 003717)	Lintel Wldt, Rear	1
11	1036665	(003718- 008000)	Lintel Wldt, Rear	1
11	1076990	(008001-)	Lintel Wldt, Rear [Gray]	1
12	222158	(000000-)	Screw, Hex, Fmg, M06- 1.0 X 10	3
13	06943	(000000-)	Screw, Hex, M06- 1.0 X 20, 8.8	5
14	83124	(000000- 008000)	Plate Assy, Seat W/Label	1
14	9021367	(008001-)	Seat Plate Assy W/Label [Gray]	1
14	384434	(000000- 008000)	Plate Assy, Seat W/Label (Japan Only)	1
14	9021366	(008001-)	Seat Plate Assy W/Label, Tj [Gray] (Japan Only)	1
15	67767	(000000-)	Clamp, Cable	1
16	81910	(000000- 008000)	Panel, Seat Support	1
16	1076985	(008001-)	Support, Seat [Gray]	1
17	74455	(000000-)	Screw, Hex, Fmg, M06- 1.0 X 12	8
18	83364	(000000-)	Brace, Seat Support	1
19	81995	(000000-)	Molding, Trim 11- 14Ga 19.0	1
20	223078	(000000- 004016)	Switch, Seat	1
21	68275	(000000-)	Pouch	1
22	09145	(000000-)	Scr Pan M6 X 1.0 16	2
23	83122	(000000-)	Instr, Mach, Use And Care [6100]	1
24	33806	(000000-)	Button, Plug	4
25	1048955	(004017-)	Switch, Seat, No [Delta 6440- 04]	1
26	1076378	(006790-)	Arm Wldt, Safety, Sppt, Seat, .38d 06.5d	1

Fig. 5 – Steering Group

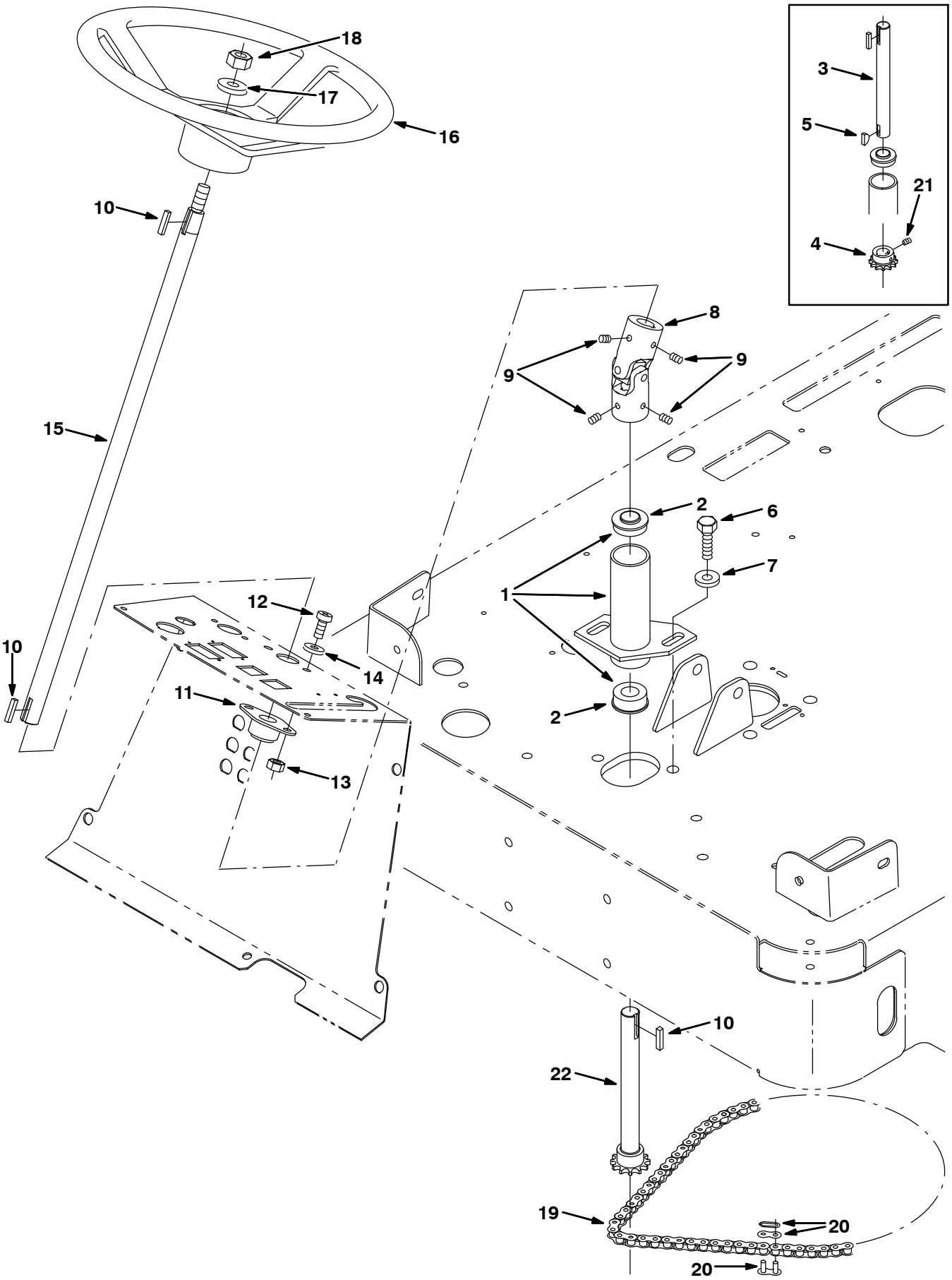

352105 – E

Fig. 5 – Steering Group

	Ref.	Part No.	Serial Number	Description	Qty.
▽	1	83112	(000000–)	Housing Assy, Bearing	1
▲	2	223073	(000000–)	Bearing, Flange	2
	3	223068	(000000–002339)	Shaft, Steering (Replaced by 391401)	1
	4	223070	(000000–002339)	Sprocket, Steering	1
	5	00500–10	(000000–002339)	Key, Woodruff	1
	6	03192	(000000–)	Screw, Hex, M10–1.5 X 30, 8.8	2
	7	41187	(000000–)	Washer, Belleville, .38	2
	8	1040295	(000000–)	Joint, U, 0.75id	1
	9	46820	(000000–)	Screw, Set, .31–18 X 0.38, Nl	4
	10	00912	(000000–)	Key, Square	3
	11	223065	(000000–)	Bearing, Flange	1
	12	09737	(000000–)	Screw, Pan, M08–1.25X 20, 4.8	2
	13	08709	(000000–)	Nut, Hex, Lock, M08–1.25,Nl	2
	14	39349	(000000–)	Washer, Flat, .31 Sae	2
	15	223061	(000000–)	Shaft, Steering	1
	16	223075	(000000–)	Wheel, Steering	1
	17	32493	(000000–)	Washer, Flat, .50 Hard	1
	18	08711	(000000–)	Nut, Hex, Lock, M12–1.75,Nl	1
	19	83113	(000000–)	Chain, Roller #35, .375 Pitch	1
	20	14799	(000000–)	Link, Chain	1
	21	39326	(000000–002339)	Screw, Set, .25 –20 X .25	2
	22	391401	(002340–)	Shaft, W/ Sprocket, Steering	1

Fig. 6 – Instrument Panel Group

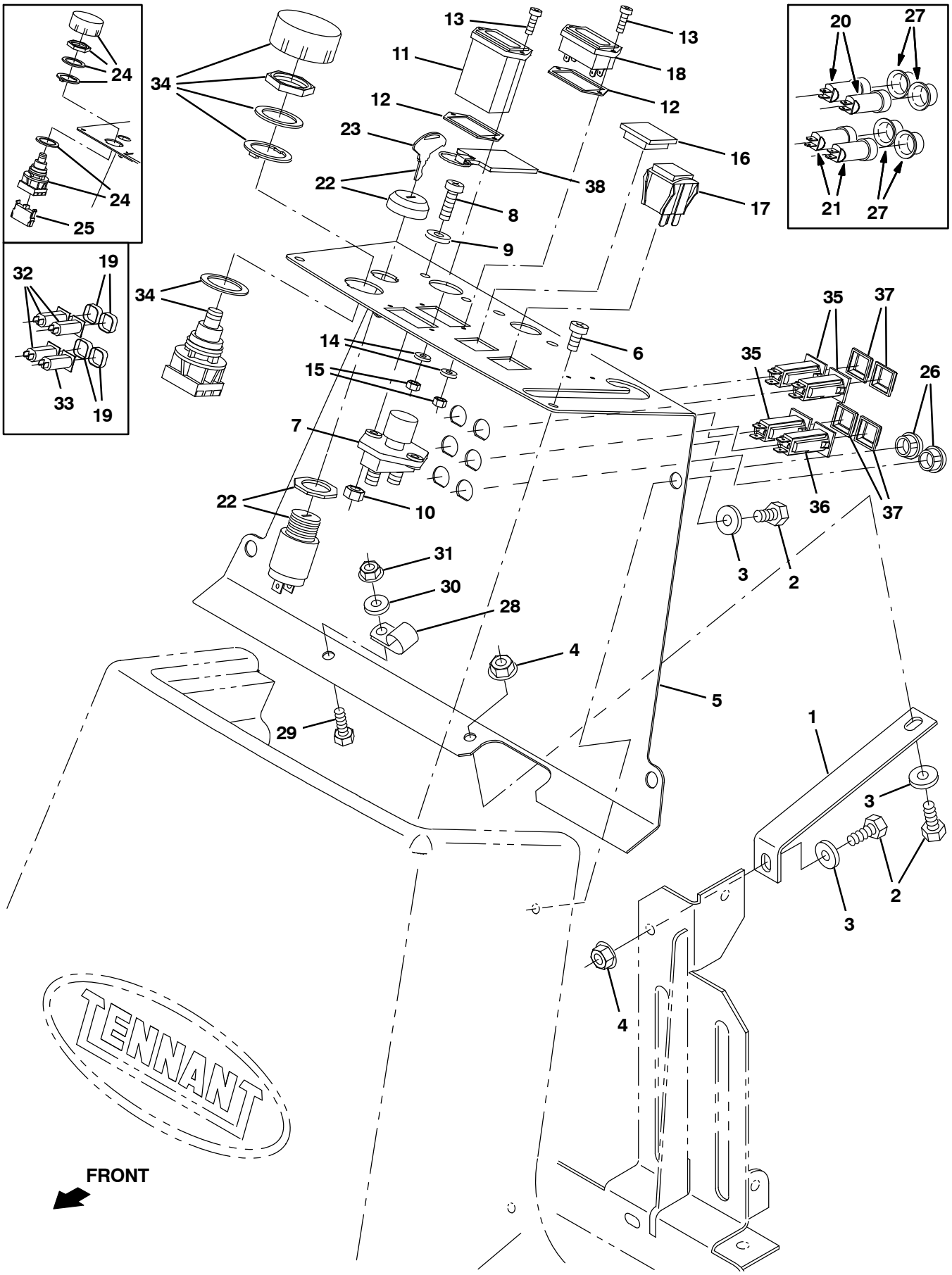

352107 – E

Fig. 6 – Instrument Panel Group

	Ref.	Part No.	Serial Number	Description	Qty.
	1	83528	(000000–)	Angle, Brace	1
	2	16735	(000000–)	Screw, Hex, M08–1.25 X 16, 8.8	6
	3	32491	(000000–)	Washer, Flat, .31 Hard	6
	4	07791	(000000–)	Nut, Hex, Flange, M08–1.25	2
	5	83172	(000000–008000)	Console, Instrument, Ev	1
	5	1076988	(008001–)	Panel, Instmt, Ele [Gray]	1
	6	360973	(000000–)	Screw, Pan, #12– X 0.50	2
	7	44078	(000000–)	Switch, Pushmom, Spst100A 12V	1
	8	09164	(000000–)	Screw, Pan, M06–1.0 X 20, 4.8	2
	9	19066	(000000–)	Washer, Flat, #10	2
	10	08708	(000000–)	Nut, Hex, Lock, M06–1.0, Nl	2
	11	377324	(000000–003438)	Gauge Kit, Hourmeter, F/31988 [10k]	1
	11	1068904	(003439–)	Gauge, Hourmeter, 05–277Vdc/Vac, 2–Hole	1
	12	222683	(000000–)	Gasket	2
	13	09146	(000000–)	Screw, Pan, M03–0.5 X 12, 4.8	4
	14	39658	(000000–)	Washer, Lock, Int, #04	4
	15	01754	(000000–)	Nut, Hex, Std, M03–0.5	4
	16	222534	(000000–)	Plug	1
	17	383831	(000000–)	Switch, Rocker, Spdt,3 Position	1
	18	1038957	(000000–)	Gauge, Discharge, Battery, 36vdc, Led	1
	19	1046173	(003985–004787)	Boot, Circuitbreaker	4
	20	27920	(000000–003984)	Circuitbreaker, 5A	2
	21	57164	(000000–003984)	Circuitbreaker, 10A	2
▽	22	361076	(000000–)	Switch, Ignition	1
▲	23	361144	(000000–)	Key, Ignition Switch	1
	24	78553	(000000–004307)	Switch, Pushbutton	1
	25	65665	(000000–004307)	Contact, Switch	1
	26	57167	(000000–)	Button, Plug	2
	27	57751	(000000–003984)	Boot	4
	28	33584	(000000–)	Clamp, Cable	1
	29	06943	(000000–)	Screw, Hex, M06 1.0 X 20	1
	30	32483	(000000–)	Washer, Flat, 1/4 Sae	1
	31	07790	(000000–)	Nut, Hex, Flange, M06–1.0	1
	32	1046152	(003985–004787)	Circuitbreaker, 2.5a, Resetable	3
	33	1046151	(003985–004787)	Circuitbreaker, 10a, Resetable	1
	34	1053842	(004308–)	Switch, Safety, Shutoff	1
	35	1064184	(004788–)	Circuitbreaker, 2.5a, Resetable	3
	36	1064187	(004788–)	Circuitbreaker, 10a, Resetable	1
	37	1064191	(004788–)	Boot, Circuitbreaker	4
	37	1075003	(000000–)	Keychain, Rectangle, Parts & Service	1

Fig. 7 – Electrical Panel Group (000000 – 007118)

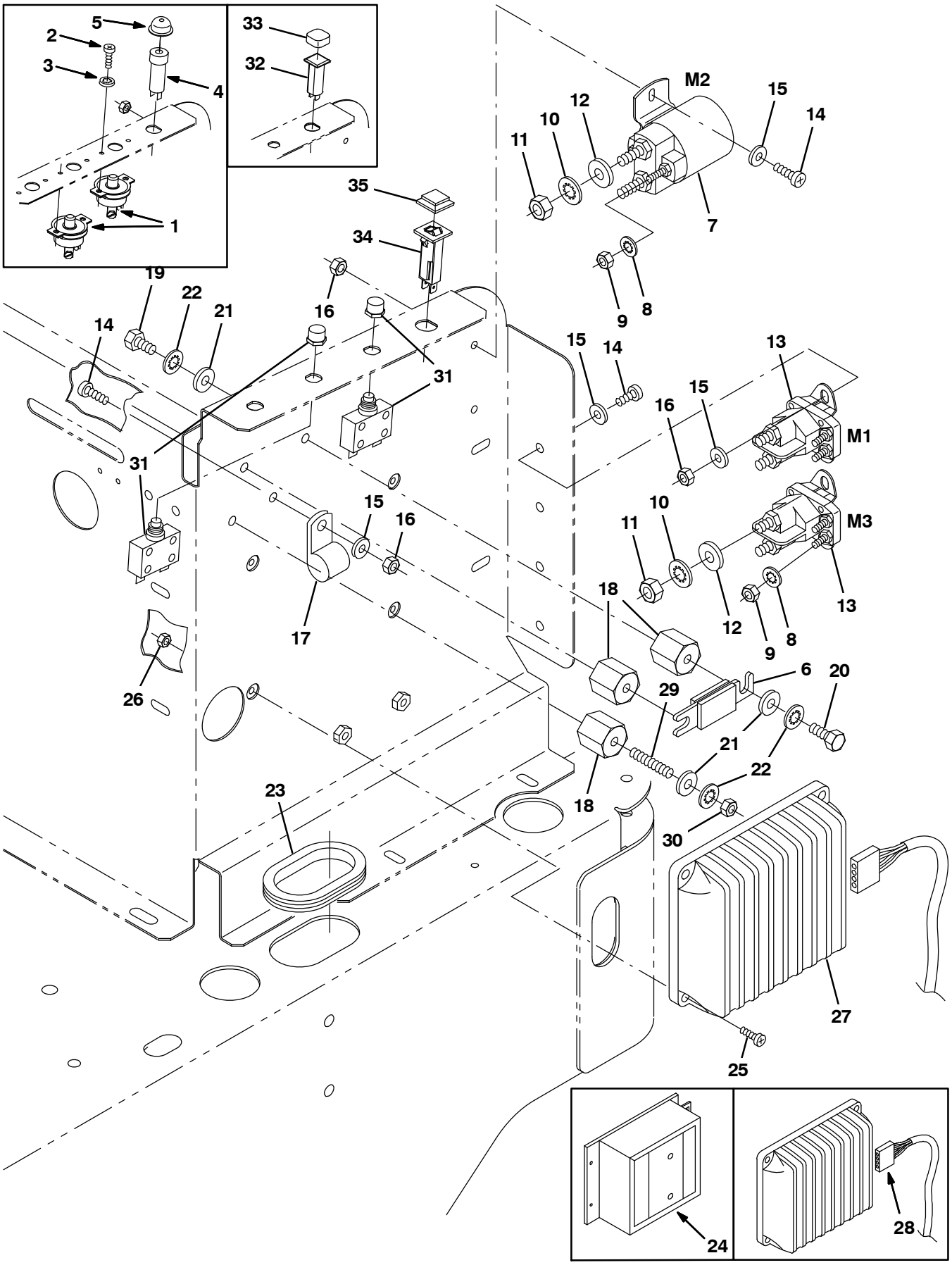

352109 – E

Fig. 7 – Electrical Panel Group (000000 – 007118)

Ref.	Part No.	Serial Number	Description	Qty.
1	9003354	(000000–003717)	Circuitbreaker Kit, 25a, Replmt, Ci	2
2	32516	(000000–003717)	Screw, Pan, #08–32 X 0.50, G1	4
3	32978	(000000–003717)	Washer, Lock, Int, #08	4
4	57164	(000000–003984)	Circuitbreaker, 10A	1
5	57751	(000000–003984)	Boot	1
6	87319	(000000–007118)	Fuse	1
7	45405	(000000–007118)	Contactor	1
8	32980	(000000–007118)	Washer, Lock, Int, #10	6
9	01713	(000000–007118)	Nut, Hex, Std, #10–32, G2	6
10	32984	(000000–007118)	Washer, Lock, Int, .31	6
11	01715	(000000–007118)	Nut, Hex, Std, .31–24	6
12	39349	(000000–007118)	Washer, Flat, .31 Sae	6
13	386810	(000000–007118)	Relay, 36vdc, 100a, Sp N/O	2
14	06933	(000000–007118)	Screw, Pan, M05–0.8 X 16, 4.8	6
15	19066	(000000–007118)	Washer, Flat, #10	9
16	06549	(000000–007118)	Nut, Hex, Lock, M05–0.8, Nl	6
17	40678–1	(000000–007118)	Clamp, Cable	1
18	76062	(000000–007118)	Insulator, Panel & Switchboard	3
19	19314	(000000–007118)	Screw, Hex, .25–20 X 0.38, G5	3
20	19315	(000000–007118)	Screw, Hex, .25–20 X 0.50, G5	2
21	32483	(000000–007118)	Washer, Flat, .25 Sae	6
22	32982	(000000–007118)	Washer, Lock, Int, .25	6
23	62595–16	(000000–007118)	Molding, Trim 11–14Ga 8.50	1
24	222220	(000000–002014)	Controller, Motor, 36vdc 60a [Curt 1203]	1
25	06927	(000000–007118)	Screw, Pan, M04–0.7 X 16, 4.8	4
26	02850	(000000–007118)	Nut, Hex, Lock, M04–0.7, Nl	4
27	384462	(002015–007118)	Controller, Motor, 36vdc 90a [Curt 1235]	1
28	81932	(000000–002014)	Harness, Wire, Controller	1
29	41702	(000000–007118)	Rod, Threaded	1
30	19312	(000000–007118)	Nut, Hex, Std, .25–20	1
31	383724	(003718–007118)	Circuitbreaker, 25.0a, Resetable	2
32	1046151	(003985–004787)	Circuitbreaker, 10a, Resetable	1
33	1046173	(003985–004787)	Boot, Circuitbreaker	1
34	1064187	(004788–007118)	Circuitbreaker, 10a, Resetable	1
35	1064191	(004788–007118)	Boot, Circuitbreaker	1

Fig. 8 – Electrical Panel Group (007119–)

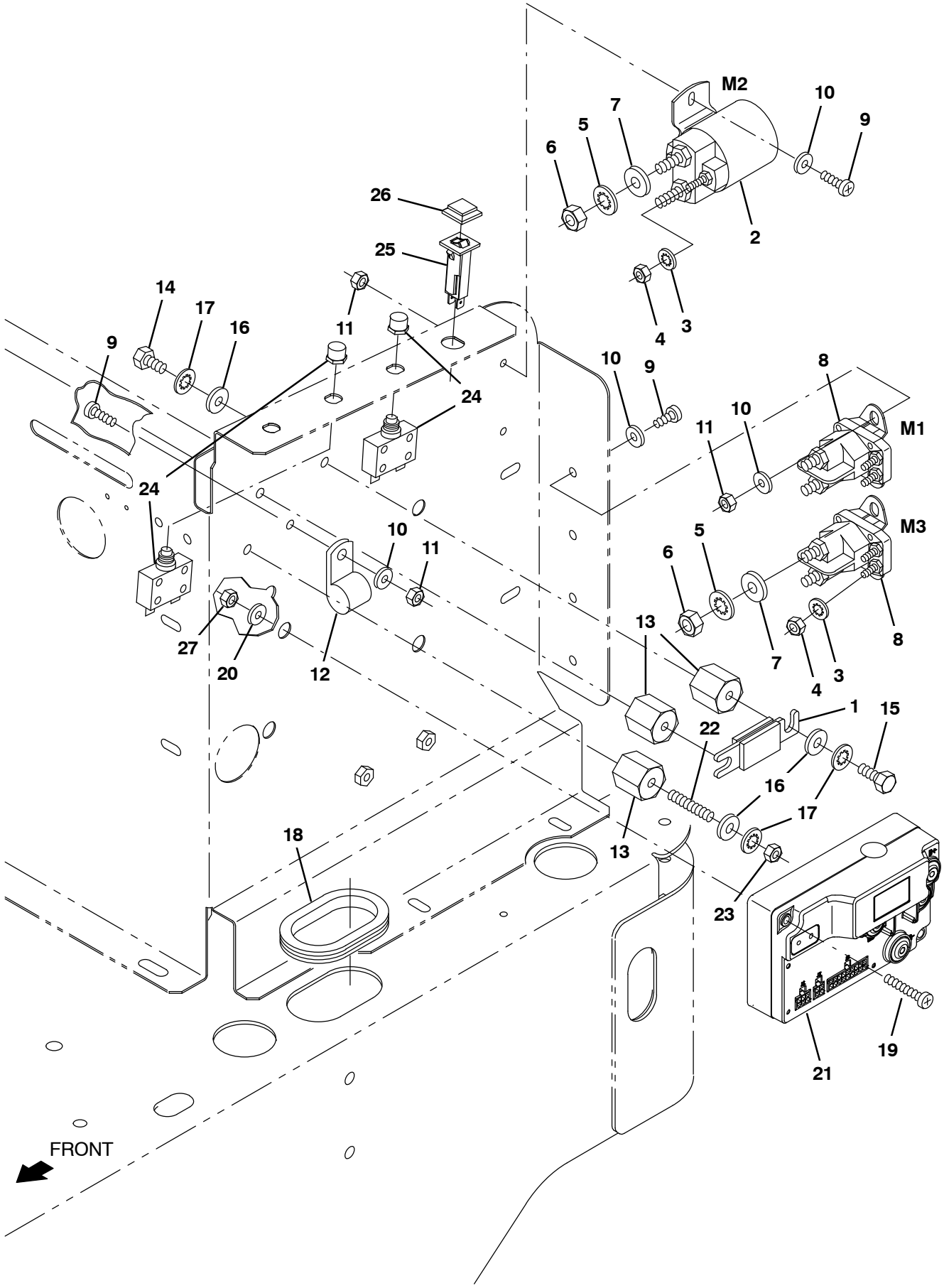

352109 - E

Fig. 7 - Electrical Panel Group (007119-)

Ref.	Part No.	Serial Number	Description	Qty.
1	87319	(007119-)	Fuse	1
2	45405	(007119-)	Contactor	1
3	32980	(007119-)	Washer, Lock, Int, #10	6
4	01713	(007119-)	Nut, Hex, Std, #10- 32, G2	6
5	32984	(007119-)	Washer, Lock, Int, .31	6
6	01715	(007119-)	Nut, Hex, Std, .31- 24	6
7	39349	(007119-)	Washer, Flat, .31 Sae	6
8	386810	(007119-)	Relay, 36vdc, 100a, Sp N/O	2
9	06933	(007119-)	Screw, Pan, M05- 0.8 X 16, 4.8	6
10	19066	(007119-)	Washer, Flat, #10	9
11	06549	(007119-)	Nut, Hex, Lock, M05- 0.8, Nl	6
12	40678- 1	(007119-)	Clamp, Cable	1
13	76062	(007119-)	Insulator, Panel & Switchboard	3
14	19314	(007119-)	Screw, Hex, .25- 20 X 0.38, G5	3
15	19315	(007119-)	Screw, Hex, .25- 20 X 0.50, G5	2
16	32483	(007119-)	Washer, Flat, .25 Sae	6
17	32982	(007119-)	Washer, Lock, Int, .25	6
18	62595- 16	(007119-)	Molding, Trim 11- 14Ga 8.50	1
19	06927	(007119-)	Screw, Pan, M04- 0.7 X 16, 4.8	4
20	02850	(007119-)	Nut, Hex, Lock, M04- 0.7, Nl	4
21	1252048	(007119-)	Controller, Motor, 36vdc 90a [Curt 1226]	1
22	41702	(007119-)	Rod, Threaded	1
23	19312	(007119-)	Nut, Hex, Std, .25- 20	1
24	383724	(007119-)	Circuitbreaker, 25.0a, Resetable	2
25	1064187	(007119-)	Circuitbreaker, 10a, Resetable	1
26	1064191	(007119-)	Boot, Circuitbreaker	1

Fig. 9 – Front Wheel Pivot Group (000000–002362)

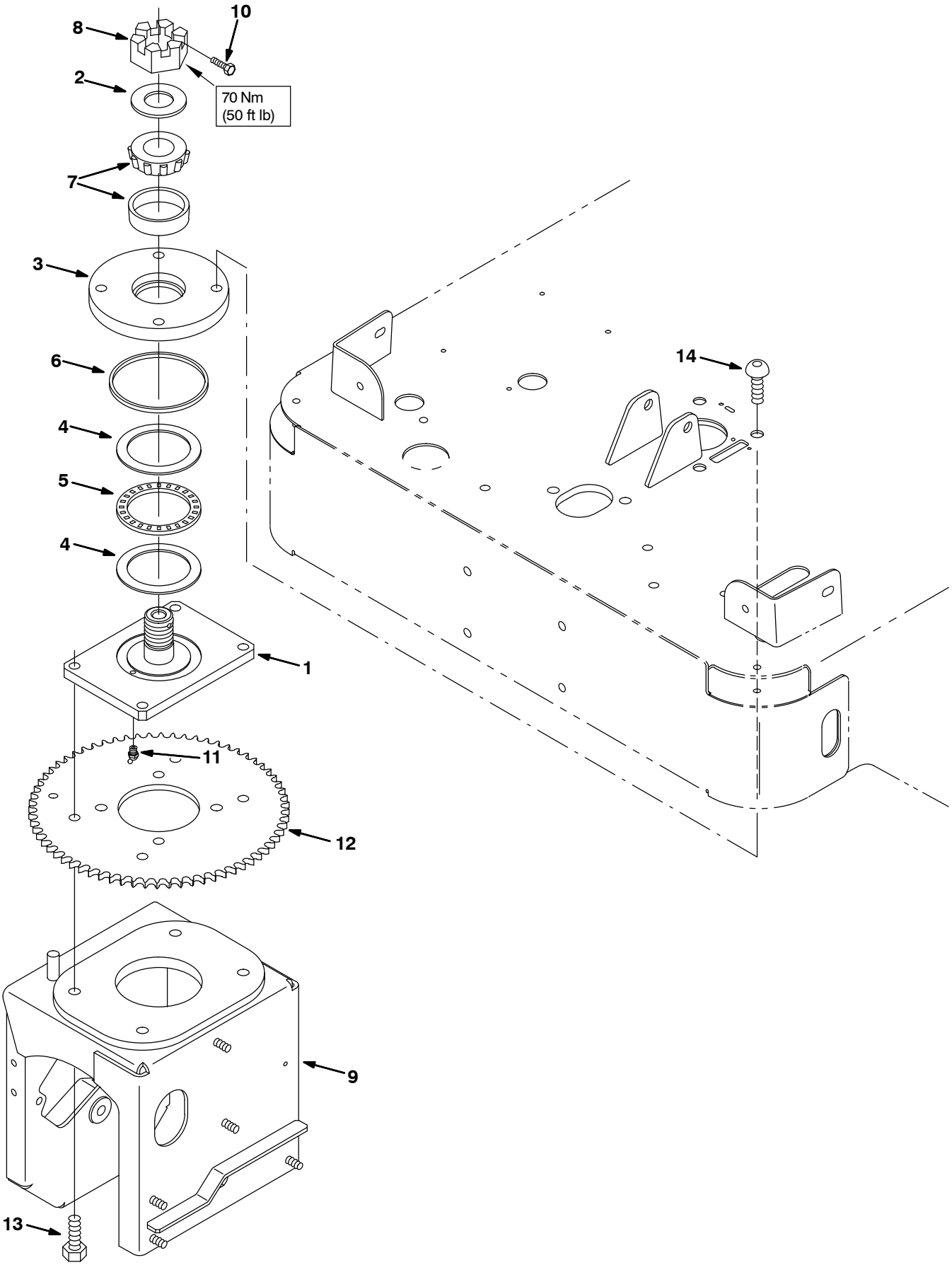

352111 – E

Fig. 9 – Front Wheel Pivot Group (000000–002362)

	Ref.	Part No.	Serial Number	Description	Qty.
	1	83044	(000000–002362)	Plate Wldt, Swivel	1
	2	223153	(000000–002362)	Washer	1
	3	223157	(000000–002362)	Plate, Swivel	1
▽		374299	(000000–002362)	Bearing Kit, Ci, Front Drive Wheel	1
▲	4	223161	(000000–002362)	Washer, Thrust	2
▲	5	223154	(000000–002362)	Bearing, Needle	1
▲	6	223160	(000000–002362)	Seal, Ring	1
▲	7	49225	(000000–002362)	Bearing Assy, 2.33d 1.25b Cup/Cone	1
	8	223159	(000000–002362)	Nut, Hexslot 1.25–12	1
	9	83070	(000000–002362)	Housing Wldt, Wheel, Front	1
	10	361339	(000000–002362)	Screw, Hex 6X 1.0 16 Pltd	1
	11	08407	(000000–002362)	Fitting, Grease	1
	12	385650	(000000–002362)	Sprocket, Steering, Drive	1
	13	41346	(000000–002362)	Screw, Hex, M12–1.75 X 30, 8.8	4
	14	83097	(000000–002362)	Scr–Butn M12X1.75 25 Nylonlo	4

Fig. 10 – Front Drive Wheel Group (000000–002362)

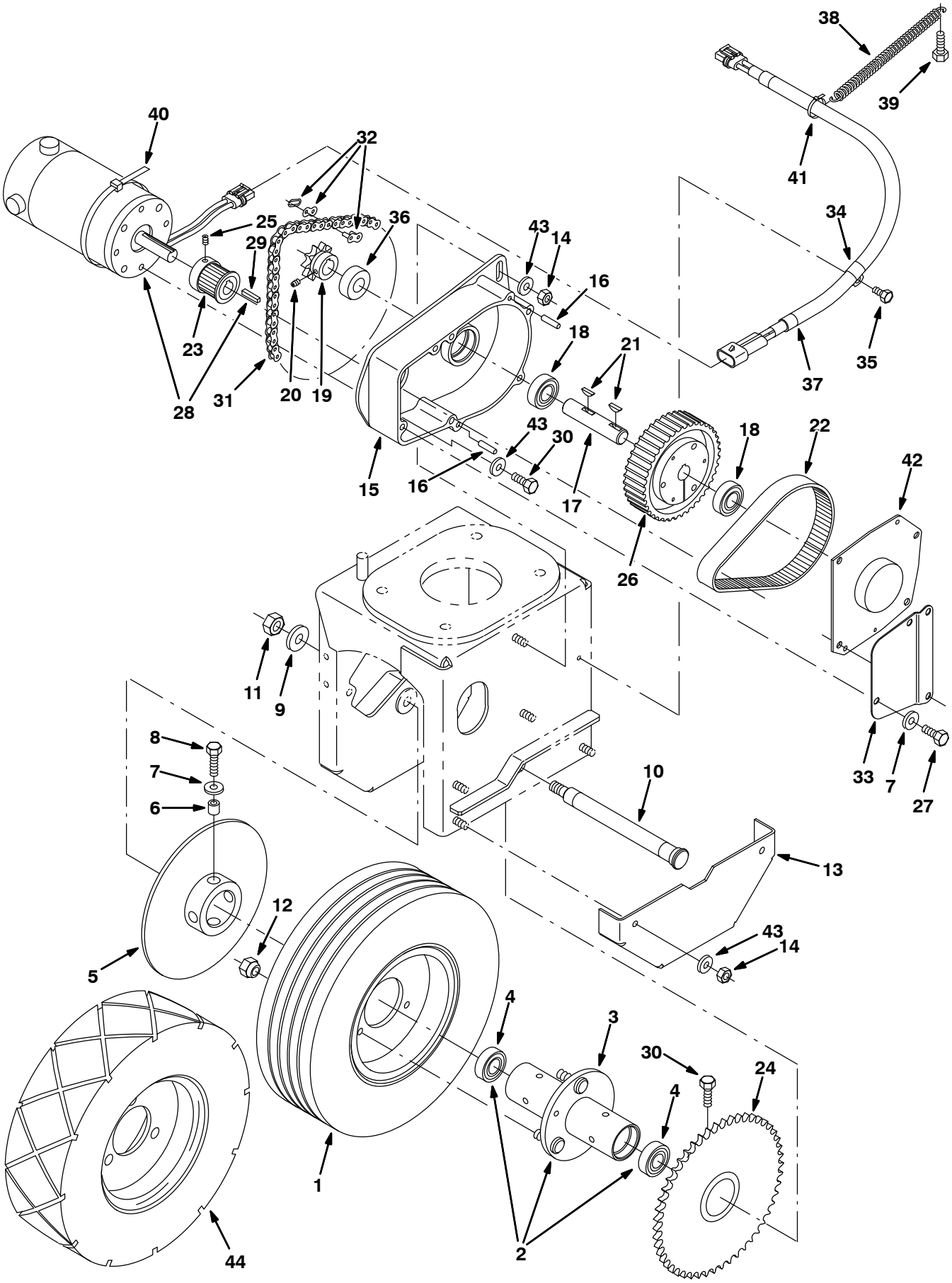

352113 – E

Fig. 10 – Front Drive Wheel Group (000000–002362)

	Ref.	Part No.	Serial Number	Description	Qty.
	1	369345	(000000–002362)	Tire & Rim Assy	1
▽	2	83036	(000000–002362)	Bearing Assy, Front Wheel	1
▲	3	83442	(000000–002362)	Housing Wldt, Bearing, Wheel	1
▲	4	369319	(000000–002362)	Bearing, Ball	2
	5	83059	(000000–002362)	Disc Wldt, Brake 8.0 Dia X .18	1
	6	222460	(000000–002362)	Sleeve	4
	7	39349	(000000–002362)	Washer, Flat, .31 Sae	9
	8	39277	(000000–002362)	Screw, Hex, M08–1.25 X 25, 8.8	4
	9	32486	(000000–002362)	Washer, Flat, .50 Sae	1
	10	83069	(000000–002362)	Axle, Wheel, Front	1
	11	08711	(000000–002362)	Nut, Hex, Lock, M12–1.75,Nl	1
	12	11109	(000000–002362)	Nut, Wheel, .44–20 X 60 Angle	3
	13	83081	(000000–002362)	Guard, Chain	1
	14	08709	(000000–002362)	Nut, Hex, Lock, M08–1.25,Nl	5
	15	83251	(000000–002362)	Housing, Belt, Front, Machinin	1
	16	83043	(000000–002362)	Pin, Dowel .250 X 1.000	2
	17	83095	(000000–002362)	Shaft, Intermediate	1
	18	369319	(000000–002362)	Bearing, Ball	2
▽	19	83399	(000000–002362)	Sprocket, #40, 10T	1
▲	20	39327	(000000–002362)	Screw, Set, .25–20 X 0.31, Soc	2
	21	00500–10	(000000–002362)	Key, Woodruff, 0.19 0.75 [Asa0606]	2
	22	83050	(000000–002362)	Belt, Timing, 5Mm X 25Mm X 100	1
	23	83052	(000000–002362)	Sprocket, Timing, 23T X 25Mm	1
	24	83446	(000000–002362)	Sprocket Wldt, Ev	1
	25	39327	(000000–002362)	Screw, Set, .25–20 X 0.31, Soc	2
▽	26	83051	(000000–002362)	Sprocket, Timing, 80T X 25Mm	1
▲		25047	(000000–002362)	Screw, Hex, .25–20 X 1.25, 5	3
	27	16735	(000000–002362)	Screw, Hex, M08–1.25 X 16, 8.8	6
	28	81941	(000000–002362)	Motor, .75 Hp, 36V, 2500Rpm (See Breakdowns) (Replaced by 374268)	1
▽	28	374268	(000000–002362)	Motor, Ele, 36vdc 0.75hp 2500rpm (See Breakdowns)	1
▲	29	00916	(000000–002362)	Key, Square	1
	30	16931	(000000–002362)	Screw, Hex, M08–1.25 X 20, 8.8	6
▽	31	83053	(000000–002362)	Chain, O–Ring, Rlr, #40 X 56 P	1
▲	32	83099	(000000–002362)	Link, Chain	1
	33	83094	(000000–002362)	Plate, Cover, Belt	1
	34	26395–1	(000000–002362)	Clamp, Cable	1
	35	74455	(000000–002362)	Screw, Hex, Fmg, M06–1.0 X 12	1
	36	375018	(000000–002362)	Washer, .750B 1.5Od .53Foam	1
	37	81930	(000000–002362)	Cord Assy, Motor	1
	38	22298	(000000–002362)	Spring, Tension	1
	39	12333	(000000–002362)	Screw, Hex, M08–1.25 X 25, Ss	1
	40	44961	(000000–002362)	Tie, Cable 4.00 Max 14.50Lg	1
	41	49266	(000000–002362)	Tie, Cable 1.75D Max 7.50Lg	1
	42	83091	(000000–002362)	Plate Wldt, Cover	1
	43	41186	(000000–002362)	Washer, Belleville .31 Pltd	5
	44	385766	(000000–002362)	Tire & Rim Assy (Japan Only)	1

Fig. 11 – Front Drive Wheel Group (002363–)

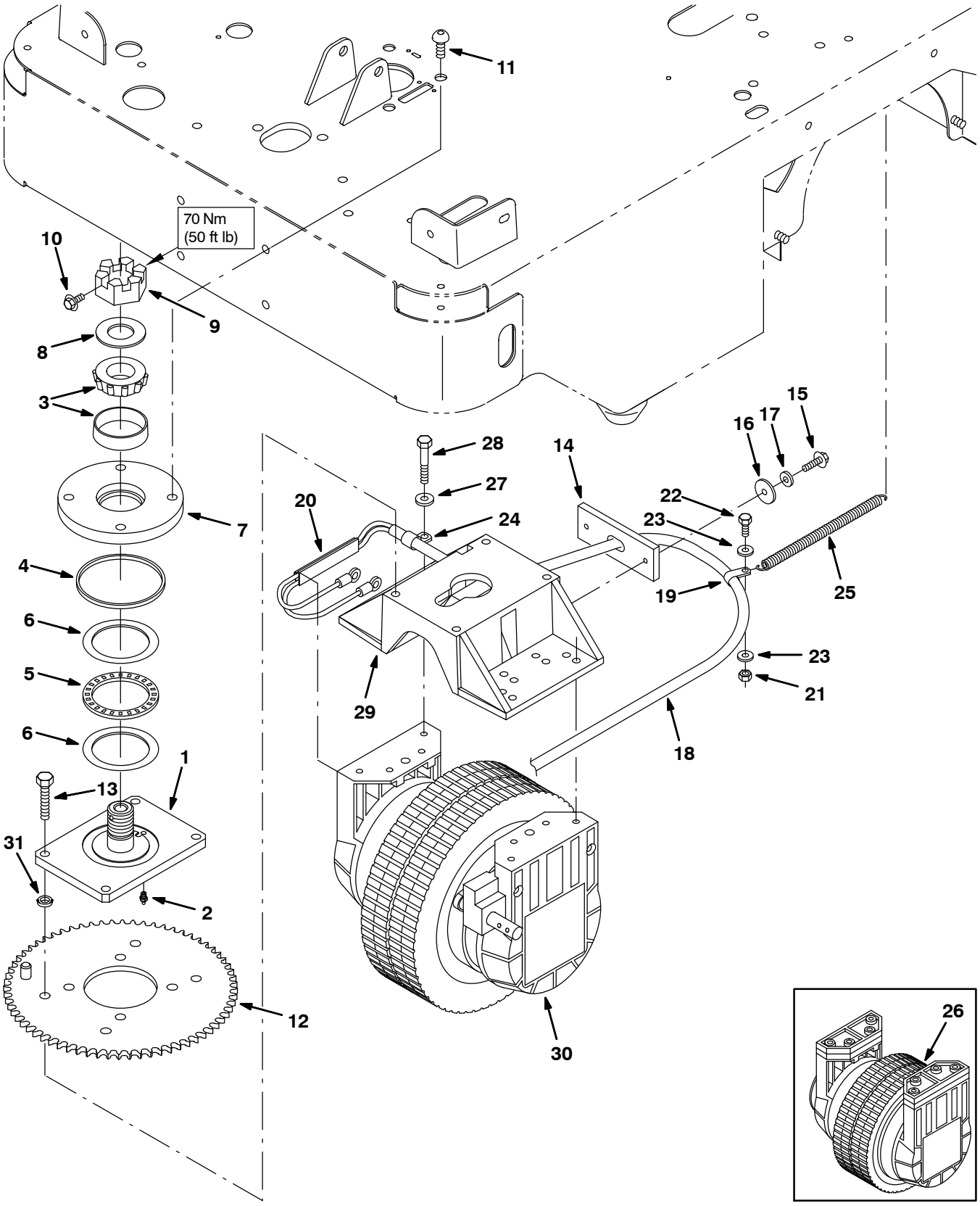

353834 – E

Fig. 10 – Front Drive Wheel Group (002363–)

	Ref.	Part No.	Serial Number	Description	Qty.
	1	390855	(002363–)	Plate Wldt, Swivel	1
	2	07259	(002363–)	Fitting, Grease, Str Pm04 .47l	1
▽		374299	(002363–)	Bearing Kit, Ci, Front Drive Wheel	1
▲	3	49225	(002363–)	Bearing Assy, 2.33d 1.25b Cup/Cone	1
▲	4	223160	(002363–)	Seal, Ring	1
▲	5	223154	(002363–)	Bearing, Needle	1
▲	6	223161	(002363–)	Washer, Thrust	2
	7	223157	(002363–)	Plate, Swivel, Bottom	1
	8	223153	(002363–)	Washer	1
	9	223159	(002363–)	Nut, Hex, Sltd, 1.25–12	1
	10	361339	(002363–)	Screw, Hex, M06 X 1.0 X 16, Fmg	1
	11	83097	(002363–)	Screw, Btn, M12 X 1.75 X 25, 10.9 Nl	4
	12	374163	(002363–)	Sprocket Wldt, Steering, Drive	1
	13	06962	(002363–)	Screw, Hex, M10 X 1.5 X 45, 8.8	4
	14	1001959	(002363–)	Flap, Strainrelief	1
	15	222159	(002363–)	Screw, Hex, M06 X 1.0 X 25, Fmg	2
	16	32490	(002363–)	Washer, Flat, .25 Std	2
	17	41178	(002363–)	Washer, Flat, 0.25 Fender	2
	18	9018722	(002363–006394)	Propel Cable, Repair, Afmkt [6100]	1
	18	1036873	(006395–)	Harness, Main [6100]	1
	19	26395–1	(002363–)	Clamp, Cable, Stl, 0.56d X 0.38w, 1h	1
	20	391300	(002363–)	Duct, Pvc, 0.40 X 0.75 0.40l	1
	21	08712	(002363–)	Nut, Hex, Lock, M06 X 1.0, Nl, Ss	1
	22	15678	(002363–)	Screw, Hex, M06 X 1.0 X 16, Ss	1
	23	32483	(002363–)	Washer, Flt, .25 Sae	2
	24	67767	(002363–)	Clamp, Cable, Stl, 0.69d X 0.62w, 1h	1
	25	22298	(002363–)	Spring, Extn, 0.50od X 0.05wir, 8.0l	1
	26	390851	(002363–002651)	Gearbox, Wheel, Front, 250mm (See Breakdowns) (Replaced by 391462)	1
	27	01685	(002363–)	Washer, Flt, .31 Ss	6
	28	222504	(002363–)	Screw, Hex, M08 X 1.25 X 55, Ss	6
	29	390848	(002363–)	Plate, Adapter, Wheel	1
	30	374346	(002652–)	Gearbox, Wheel, 250mm, 36vdc Band Brake (See Breakdowns)	1
	31	1071856	(005316–)	Spacer, 0.39B, 0.50D, 0.12L	4

Fig. 12 – Front Brake Linkage Group (000000–002362)

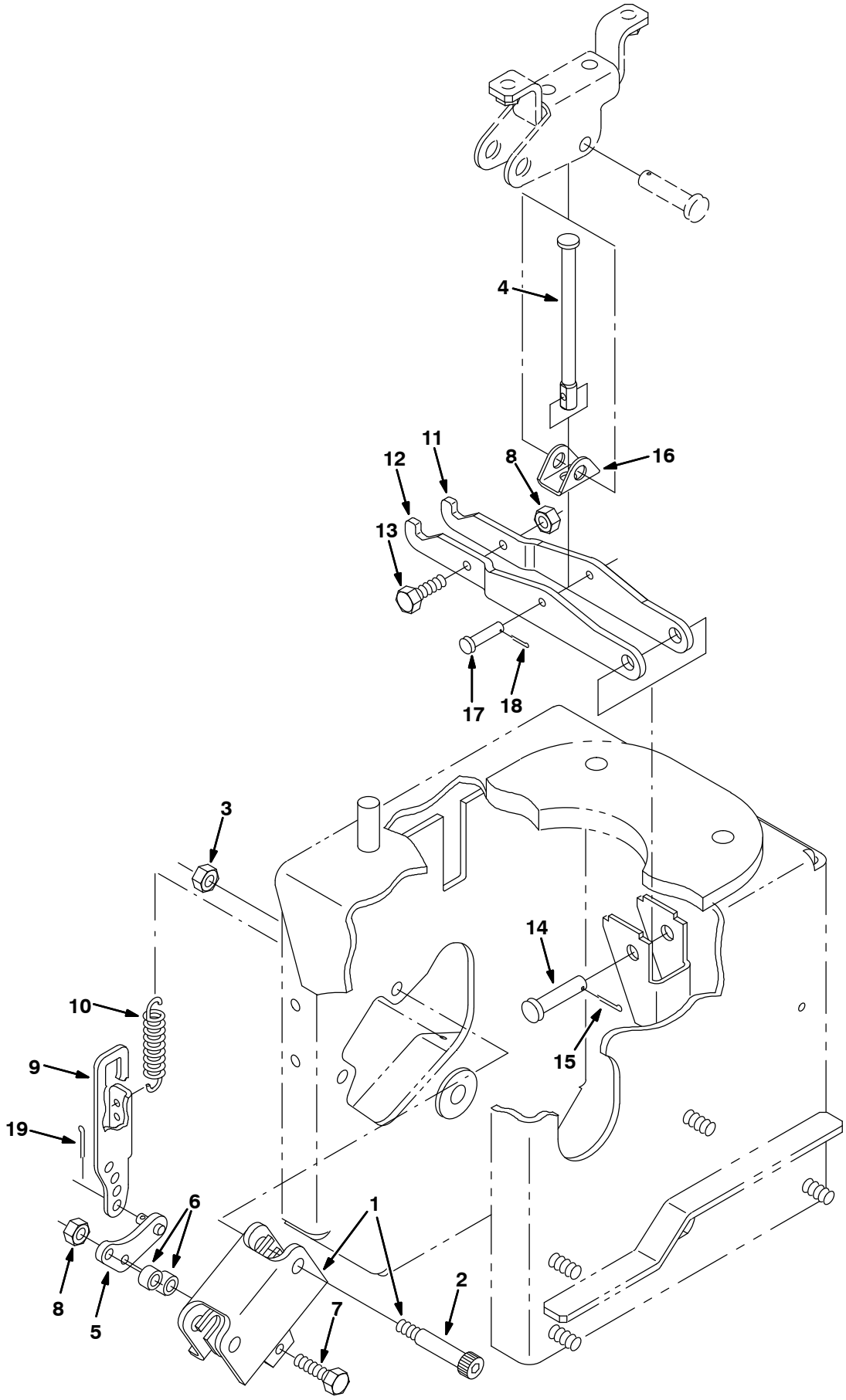

352115 – E

Fig. 12 – Front Brake Linkage Group (000000–002362)

	Ref.	Part No.	Serial Number	Description	Qty.
▽	1	83134	(000000–002362)	Caliper, Brake 6.5 – 8.0 Dia	1
▲		83420	(000000–002362)	Brake Kit, Disc	1
▲	2	83041	(000000–002362)	Scr–Shld .375 X 1.50L .31–18	2
	3	01760	(000000–002362)	Nut, Hex, Lock, .31–18, Nl	2
	4	81685	(000000–002362)	Link, Brake, Upper (Replaced by 377411)	1
	5	83137	(000000–002362)	Arm Wldt, Brake Ext	1
	6	360801	(000000–002362)	Sleeve	2
	7	06944	(000000–002362)	Screw, Hex, M06–1.0 X 25, 8.8	2
	8	08708	(000000–002362)	Nut, Hex, Lock, M06–1.0, Nl	3
	9	83136	(000000–002362)	Link, Brake	1
	10	75575	(000000–002362)	Spring, Tension	1
	11	83138	(000000–002362)	Arm, Brake, Lift, Rh	1
	12	83139	(000000–002362)	Arm, Brake, Lift, Lh	1
	13	06943	(000000–002362)	Screw, Hex, M06–1.0 X 20, 8.8	1
	14	29558	(000000–002362)	Pin, Clevis	1
	15	39005	(000000–002362)	Pin, Cotter	1
	16	390868	(000000–002362)	Channel, Brake, Link, Upper (Replaced by 377411)	1
	17	36191	(000000–002362)	Pin, Clevis	1
	18	08170	(000000–002362)	Pin, Cotter	1
	19	39005	(000000–002362)	Pin, Cotter	1

Fig. 13 – Front Brake Linkage Group (002363–002651)

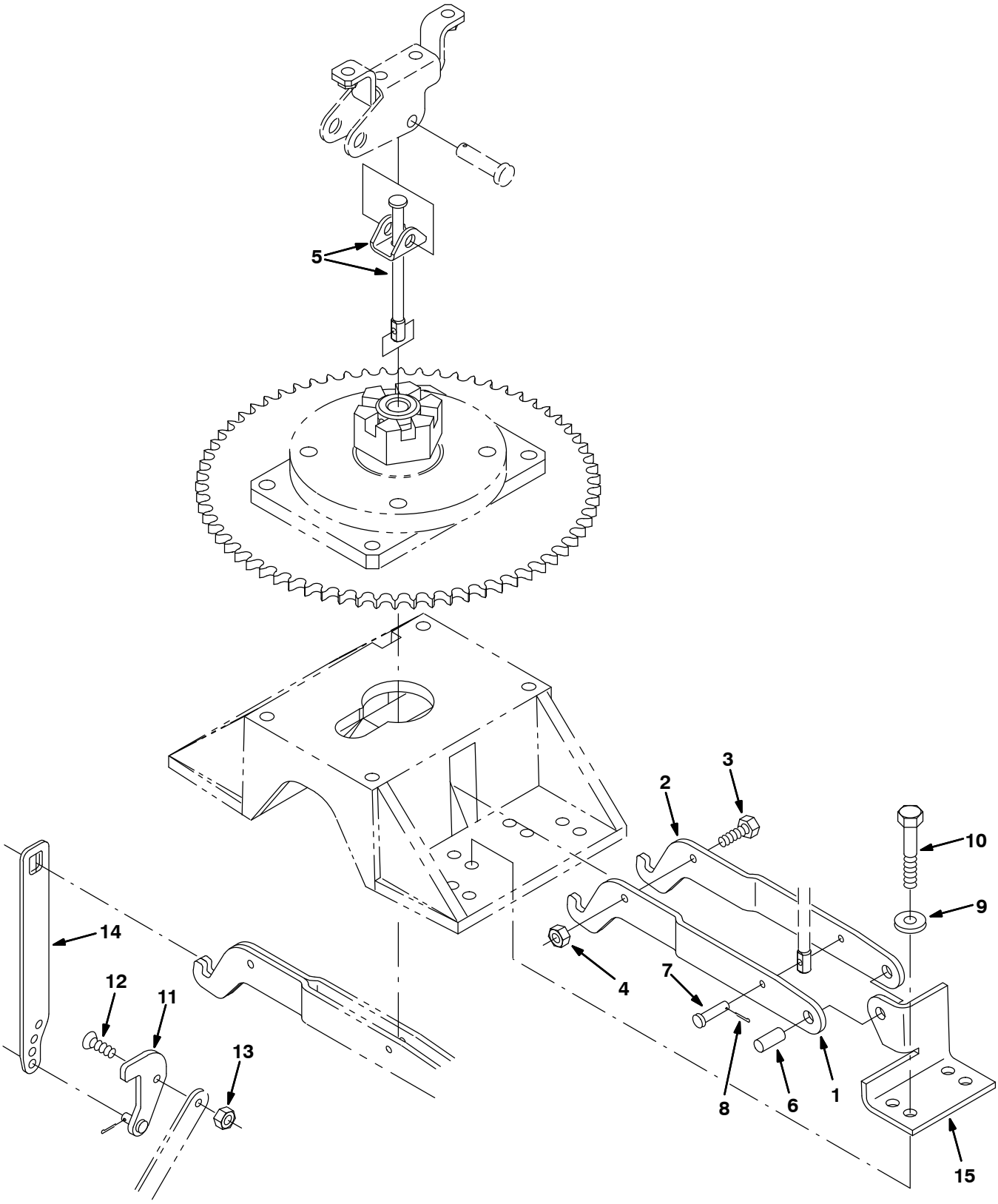

353513 – E

Fig. 13 – Front Brake Linkage Group (002363–002651)

Ref.	Part No.	Serial Number	Description	Qty.
1	390892	(002363–002651)	Arm, Link, Brake, Lh	1
2	390893	(002363–002651)	Arm, Link, Brake, Rh	1
3	08716	(002363–002651)	Screw, Hex, M06 X 1.0 X 20, Ss	1
4	08712	(002363–002651)	Nut, Hex, Lock, M06 X 1.0, Nl, Ss	1
5	377411	(002363–002651)	Linkage Kit, Brake, Replmt	1
6	390857	(002363–002651)	Pin, Brake	1
7	36191	(002363–002651)	Pin, Clevis, 0.19 D X 1.00l	1
8	08170	(002363–002651)	Pin, Cotter, .062 X 0.50	2
9	01685	(002363–002651)	Washer, Flt, .31 Ss	2
10	06957	(002363–002651)	Screw, Hex, M08 X 1.25 X 60, Ss	2
11	390895	(002363–002651)	Arm Wldt, Brake	1
12	09062	(002363–002651)	Screw, Flat, M06 X 1.0 X 16, 10.9	1
13	08708	(002363–002651)	Nut, Hex, Lock, M06 X 1.0, Nl	1
14	391389	(002363–002651)	Link, Brake, Flt Rep.by392968	1
15	390856	(002363–002651)	Bracket, Brake, Pivot	1

Fig. 14 – Front Brake Linkage Group (002652–)

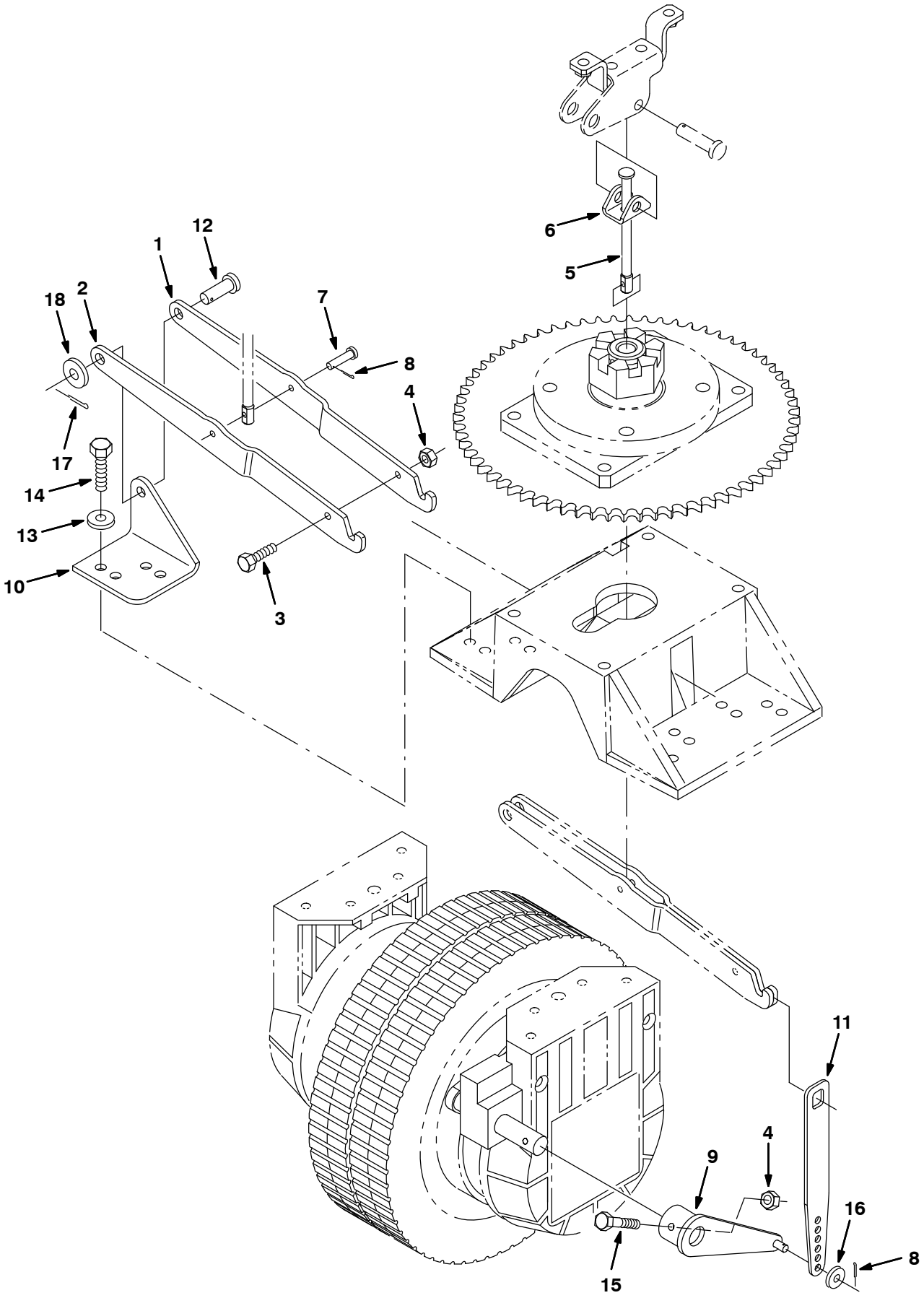

354264 – E

Fig. 14 – Front Brake Linkage Group (002652–)

Ref.	Part No.	Serial Number	Description	Qty.
1	1017440	(002652–)	Arm, Link, Brake, Lh	1
2	1017439	(002652–)	Arm, Link, Brake, Rh	1
3	08716	(002652–)	Screw, Hex, M06 X 1.0 X 20, Ss	1
4	08712	(002652–)	Nut, Hex, Lock, M06 X 1.0, Nl, Ss	2
5	1026028	(002652–)	Link, Brake, Upper	1
6	1026017	(002652–)	Channel, Brake [6100]	1
7	36191	(002652–)	Pin, Clevis, 0.19 D X 1.00l	1
8	08170	(002652–)	Pin, Cotter, .062 X 0.50	2
9	1002522	(002652–)	Arm Wldt, Brake	1
10	1002536	(002652–)	Bracket, Brake, Pivot	1
11	1002537	(002652–)	Link, Brake	1
12	86240	(002652–)	Pin, Clevis, 0.38 D X 1.13l	1
13	01685	(002652–)	Washer, Flat, 0.31 Ss	2
14	06957	(002652–)	Screw, Hex, M8 X 1.25 X 60, 8.8	2
15	33930	(002652–)	Screw, Hex, M6 X 1.0 X 40, Ss	1
16	32483	(002652–)	Washer, Flat, 0.25 Sae	1
17	08182	(002652–)	Pin, Cotter, .125 X 1.00	1
18	32492	(002652–)	Washer, Flat, 0.38 Std	1

Fig. 15 – Directional Pedal Group

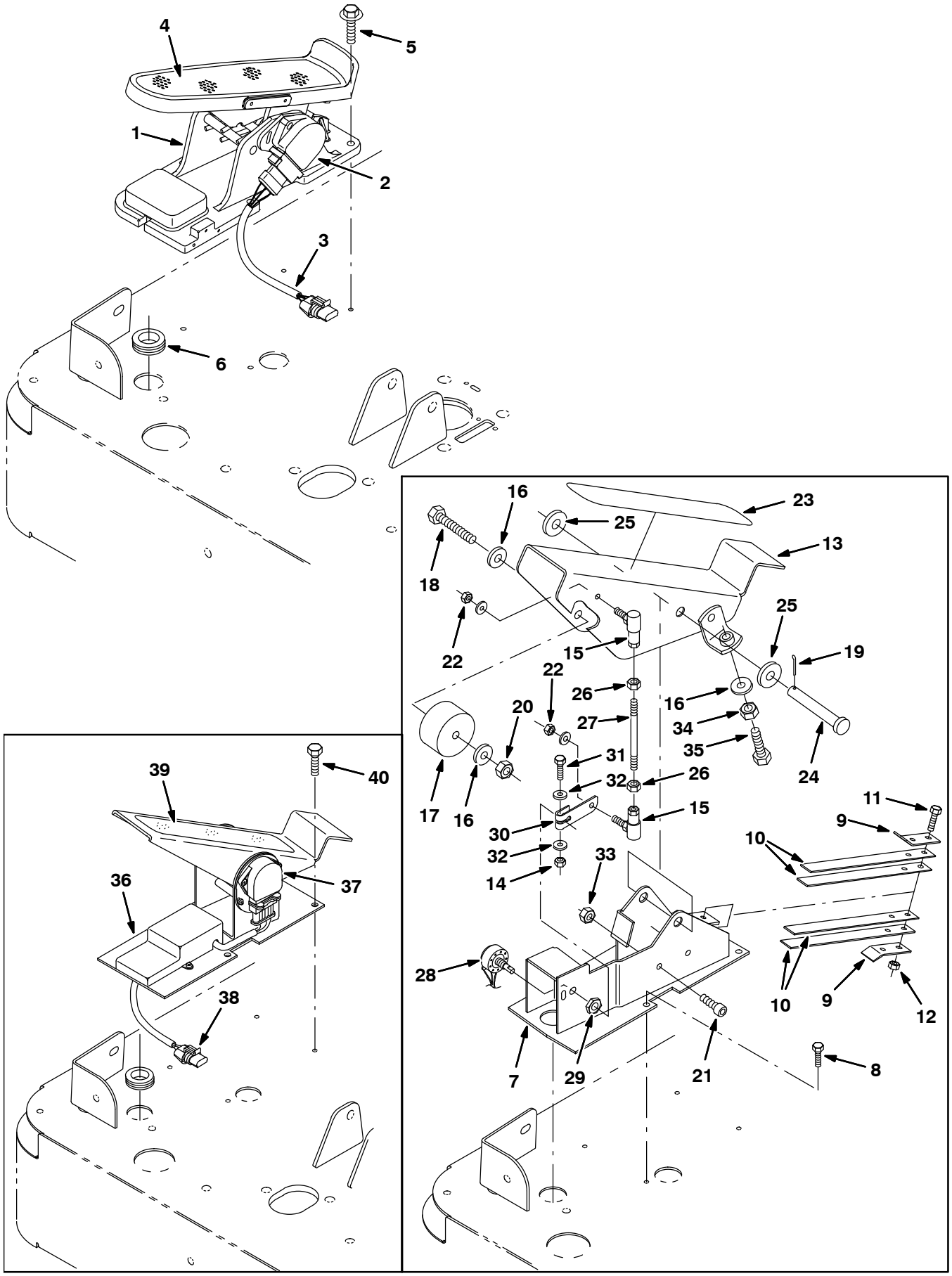

354265, 352117 – NA, JP

Fig. 15 – Directional Pedal Group

	Ref.	Part No.	Serial Number	Description	Qty.
▽	1	1034890	(003867–)	Pedal Assy, Propel, 12vdc	1
▲	2	385728	(003867–)	Sensor, Pedal Position	1
▲	3	385729	(003867–)	Harness, Pedal	1
▲	4	1042514	(003867–)	Tread, Non–Skid, 02.2w 11.5l	1
	5	222159	(003867–)	Screw, Hex, M6 X 1.00 X 25, Fmg	4
	6	10632	(002938–)	Grommet, Rbr, 0.89id, F/ 1.2h, .14matl	1
	7	81569	(000000–002937)	Plate Wldt, Directional Control	1
	8	74455	(000000–002937)	Screw, Hex, Fmg, M06–1.0 X 12	4
	9	223601	(000000–002937)	Retainer, Spring	2
	10	223600	(000000–002937)	Strip, Control Spring	4
	11	06944	(000000–002937)	Screw, Hex, M06–1.0 X 25, 8.8	2
	12	08708	(000000–002937)	Nut, Hex, Lock, M06–1.0, Nl	2
	13	223320	(000000–002937)	Pedal, Accelerator	1
	14	32981	(000000–002937)	Nut, Hex, Lock, .25–20, Nl	1
	15	14601	(000000–002937)	Balljoint	2
	16	32485	(000000–002937)	Washer, Flat, .38 Sae	3
	17	87725	(000000–002937)	Spacer	1
	18	06963	(000000–002937)	Screw, Hex, M10–1.5 X 60, 8.8	1
	19	08182	(000000–002937)	Pin, Cotter	1
	20	41430	(000000–002937)	Nut, Hex, Lock, M10–1.5, Nl	1
	21	49609	(000000–002937)	Screw, Soc, M08 X 1.25 X 16, 12.9	2
	22	13513	(000000–002937)	Nut, Hex, Lock, .25–28, Nl	1
	23	82839	(000000–002937)	Tread, Non–Skid, 02.2w 11.5l	1
	24	06474A	(000000–002937)	Pin, Clevis	1
	25	32486	(000000–002937)	Washer, Flat, .50 Sae	2
	26	01714	(000000–002937)	Nut, Hex, Std, .25–28	2
	27	384414	(000000–002937)	Rod, Thread	1
	28	81942	(000000–002937)	Potentiometer Assy, Electronic	1
	29	222607	(000000–002937)	Nut, Hex, Thin, .38–32	1
	30	81989	(000000–002937)	Lever, Accelerator	1
	31	25047	(000000–002937)	Screw, Hex, .25–20 X 1.25, G5	1
	32	32483	(000000–002937)	Washer, Flat, .25 Sae	2
	33	08709	(000000–002937)	Nut, Hex, Lock, M08 X 1.25,Nl	2
	34	39312	(000000–002937)	Nut, Hex, Std, M10 X 1.5	1
	35	39284	(000000–002937)	Screw, Hex, M10 X 1.5 X 35, 8.8	1
	36	1042523	(002938–003866)	Pedal Kit, Propel, 12vdc	1
	37	385728	(002938–003866)	Sensor, Pedal Position	1
	38	385729	(002938–003866)	Harness, Pedal	1
	39	82839	(002938–003866)	Tread, Non–Skid, 02.2w 11.5l	1
	40	74455	(002938–003866)	Screw, Hex, M06 X 1.0 X 12, Fmg	4

Fig. 16 – Rear Wheel Group

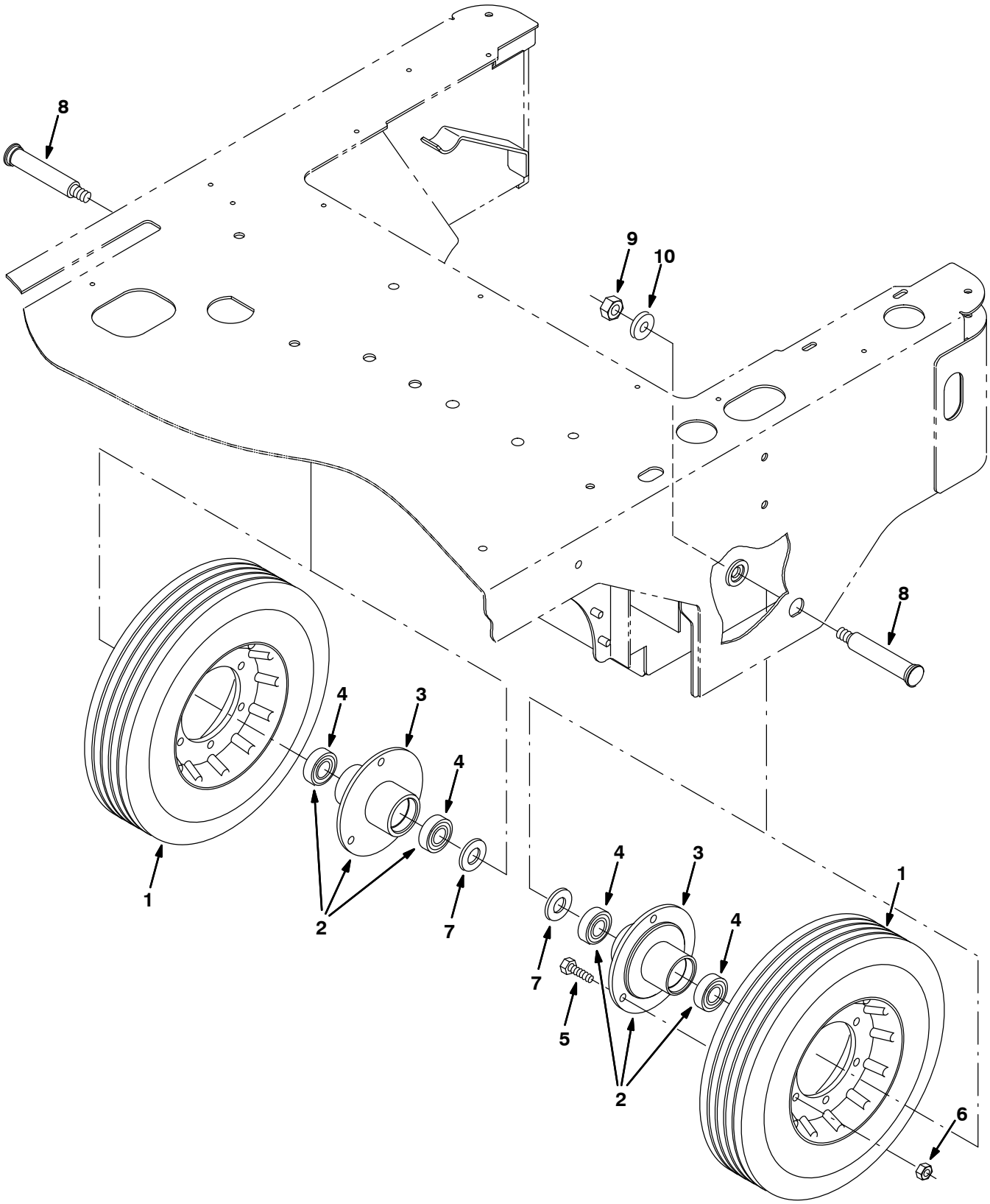

352119 – ALL

Fig. 16 – Rear Wheel Group

	Ref.	Part No.	Serial Number	Description	Qty.
	1	81681	(000000–)	Wheel Assy, Rear, Solid	2
	1	1055894	(000000–)	Tire Assy, Solid, 12.0 X 3.0 4.3bc 6bolt (Japan Only)	2
▽	2	83033	(000000–)	Bearing Assy, Rear Wheel	2
▲	3	384451	(000000–)	Housing Wldt, Wheel, Rear	1
▲	4	369319	(000000–)	Bearing, Ball	2
	5	39277	(000000–)	Screw, Hex, M08–1.25 X 25, 8.8	6
	6	08709	(000000–)	Nut, Hex, Lock, M08–1.25,Nl	6
	7	49145	(000000–)	Washer	2
	8	81682	(000000–)	Pin, Axle, Rear	2
	9	08711	(000000–)	Nut, Hex, Lock, M12–1.75,Nl	2
	10	32486	(000000–)	Washer, Flat, .50 Sae	2

Fig. 17 – Brake Pedal Group

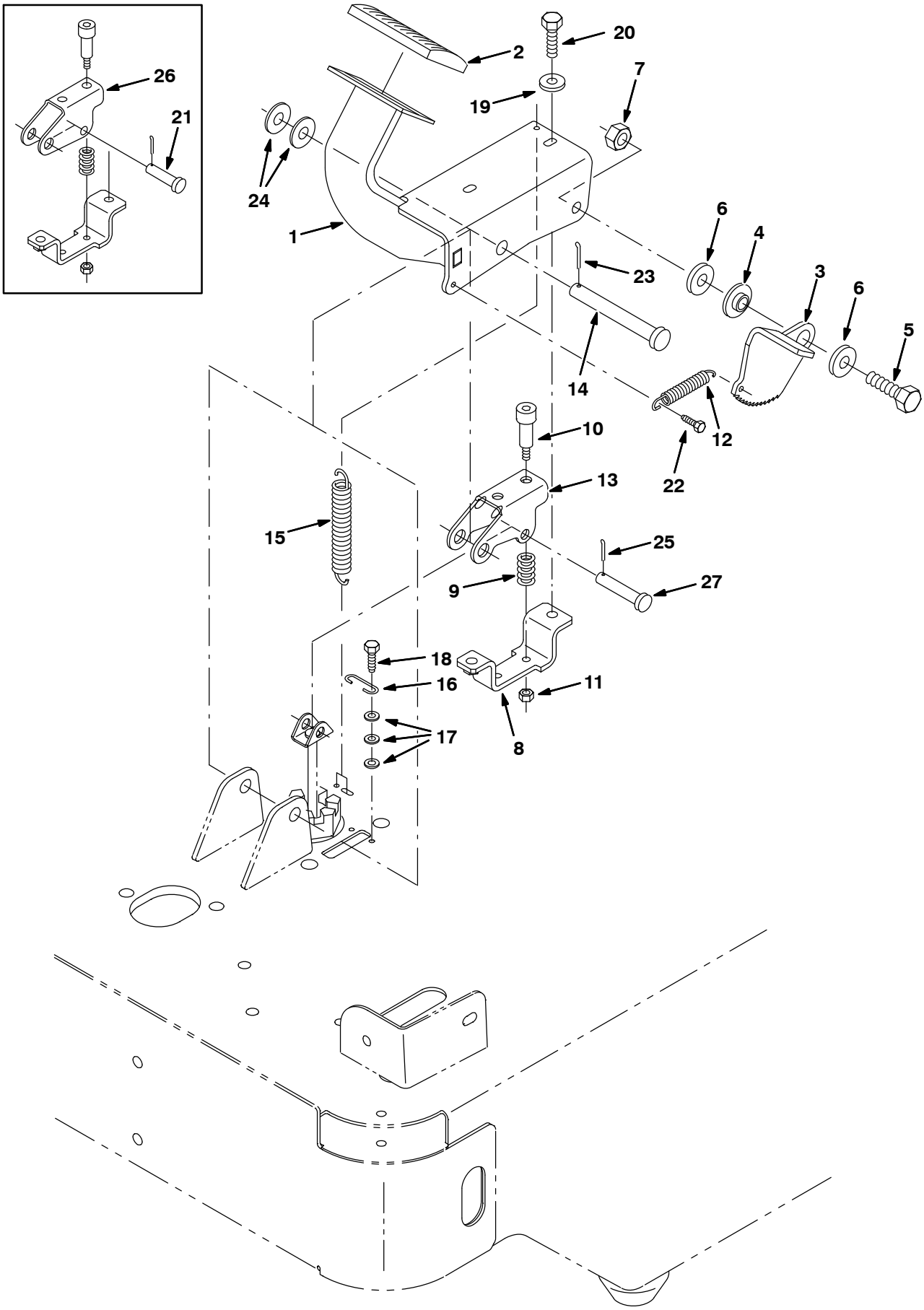

352121 – ALL

Fig. 17 – Brake Pedal Group

	Ref.	Part No.	Serial Number	Description	Qty.
▽		378901	(000000–)	Brake Assy, Parking [6100]	1
▲	1	1006723	(000000–)	Pedal Wldt, Brake	1
▲	2	51109	(000000–)	Pad, Pedal, Brake, 3.9 2.4 0.75t	1
▲	3	83149	(000000–)	Pedal, Brake, Lock	1
▲	4	363087	(000000–)	Bushing, Flng, 0.44b 1.25d 0.25l	1
▲	5	03192	(000000–)	Screw, Hex, M10 X 1.5 X 30, 8.8	1
▲	6	32492	(000000–)	Washer, Flat, 0.38 Std	2
▲	7	41430	(000000–)	Nut, Hex, Lock, M10 X 1.5, Nl	1
▲	8	392966	(000000–)	Channel Wldt, Mtg, Spring	1
▲	9	81672	(000000–)	Spring, Cmpr, .37id X Flat Wir 1.0l	2
▲	10	16213	(000000–)	Bolt, Shld, .31d X 1.00, .25–20	2
▲	11	75934	(000000–)	Nut, Hex, Lock, .25–20, Nl	2
▲	12	54745	(000000–)	Spring, Extn, 0.38od X 0.04wir, 2.3l	1
▲	13	1019764	(003086–)	Bracket, Channel, Mtg, Brake	1
▲	14	374225	(000000–)	Pin, Clevis, 0.50 D X 3.75l	1
	15	363981	(000000–)	Spring, Extn, 0.50od X 0.04wir, 3.0l	1
	16	97031	(000000–)	Spring, Wir, 0.08d, Brake, Parking	1
	17	19066	(000000–)	Washer, Flat, #10	6
	18	223198	(000000–)	Screw, Hex, M5 X 0.8 X 10, Fmg	2
	19	32483	(000000–)	Washer, Flat, 0.25 Sae	2
	20	12274	(000000–)	Screw, Hex, M6 X 1.0 X 20, 8.8, Nl	2
	21	29558	(000000–003085)	Pin, Clevis, 0.37 D X 1.50l	1
	22	55845	(000000–)	Screw, Hex, M5 X 0.8 X 16, Fmg	1
	23	08182	(000000–)	Pin, Cotter, .125 X 1.00	1
	24	32486	(000000–)	Washer, Flat, 0.50 Sae	2
	25	39005	(000000–)	Pin, Cotter, .094 X 0.75	1
	26	377411	(000000–003085)	Linkage Kit, Brake, Replmt	1
	27	29584	(003086–)	Pin, Clevis, 0.37d X 2.00l	1

Fig. 18 – Main Brush Skirts Group

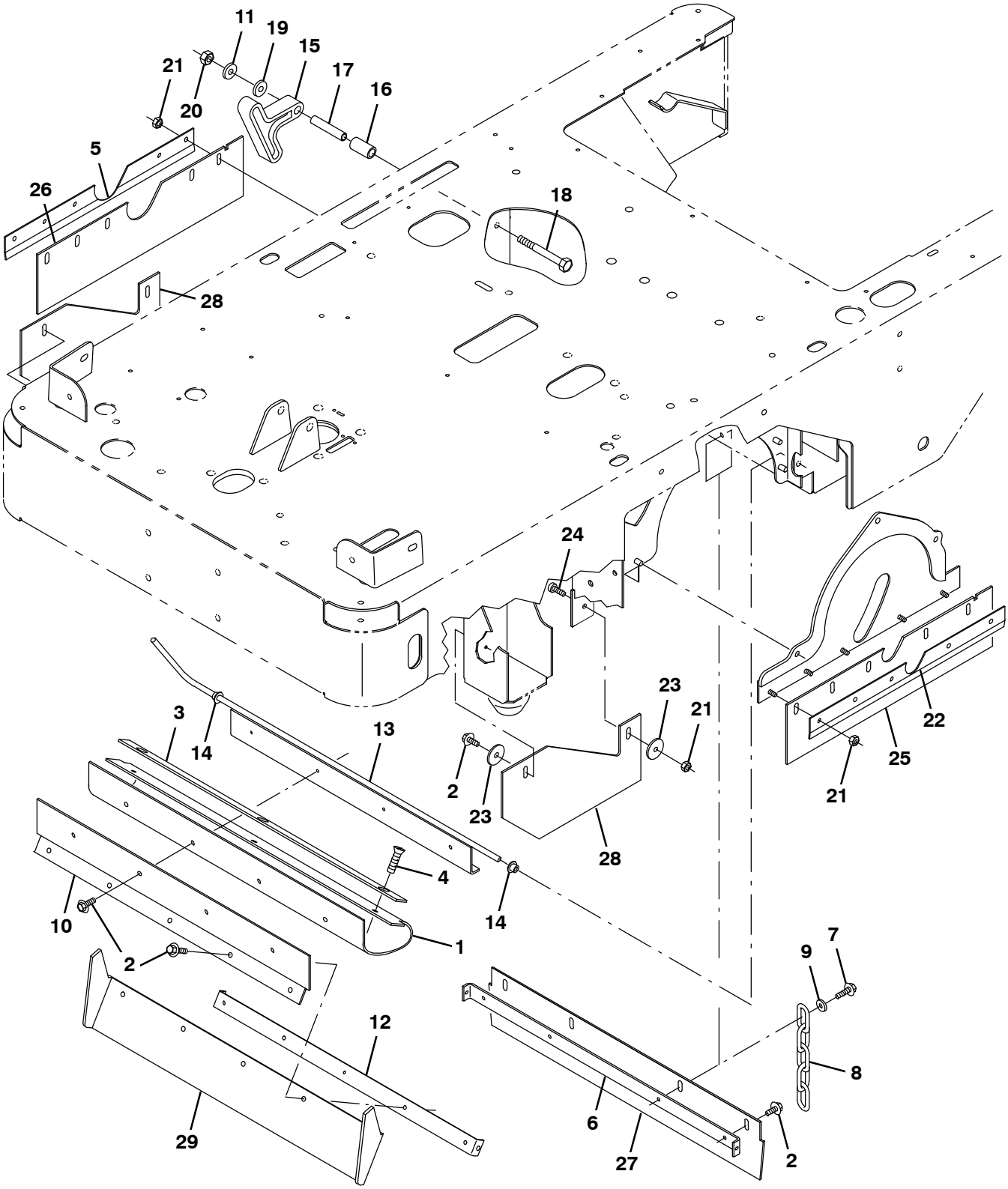

352123 – ALL

Fig. 18 – Main Brush Skirts Group

	Ref.	Part No.	Serial Number	Description	Qty.
	1	81725	(000000–)	Skirt, Recirculation	1
	2	361339	(000000–)	Screw, Hex, M6 X 1.00 X 16, Fmg	14
	3	81728	(000000–)	Retainer, Flap	1
	4	07810	(000000–)	Screw, Flt, Soc, M8 X 1.25 X 25, 10.9	3
	5	81716	(000000–)	Retainer, Recirculation Flap	1
	6	81717	(000000–)	Retainer, Recirculation Flap	1
	7	222159	(000000–)	Screw, Hex, Fmg, M06–1.0 X 25	1
	8	40758	(000000–)	Chain, Link	1
	9	32490	(000000–)	Washer, Flat, .25 Hard	1
	10	81723	(000000–)	Bracket, Support, Recirc	1
	11	59633	(000000–)	Bearing, Thrust, 0.53B 1.00D 0.03W	1
	12	81722	(000000–)	Strip, Retainer	1
	13	81791	(000000–)	Support Wldt, Recirculation	1
	14	11747	(000000–)	Bearing	2
	15	81797	(000000–)	Lever, Recirc Adj	1
	16	81918	(000000–)	Spacer	1
	17	81719	(000000–)	Sleeve, .375B .50D 2.54	1
	18	06958	(000000–)	Screw, Hex, M08–1.25 X 80, 8.8	1
	19	32491	(000000–)	Washer, Flat, .31 Hard	1
	20	08709	(000000–)	Nut, Hex, Lock, M08–1.25,Nl	1
	21	08712	(000000–)	Nut, Hex, Lock, M06–1.0, Nl,Ss	12
	22	81747	(000000–)	Retainer, Recirc, Flap	1
	23	30013	(000000–)	Washer, Flat, .31 Fender	4
	24	09164	(000000–)	Screw, Pan, Phl, M6 X 1.00 X 20, 4.8	2
▽		83119	(000000–)	Skirt Kit, 6100	1
▲	25	81748	(000000–)	Skirt, Side, Left Hand	1
▲	26	81715	(000000–)	Skirt, Side, Right Hand	1
▲	27	81727	(000000–)	Skirt, Recirculation	1
▲	28	83117	(000000–)	Skirt, Side	2
▲	29	81726	(000000–)	Skirt, Recirculation	1

Fig. 19 – Main Brush Front Flap Group

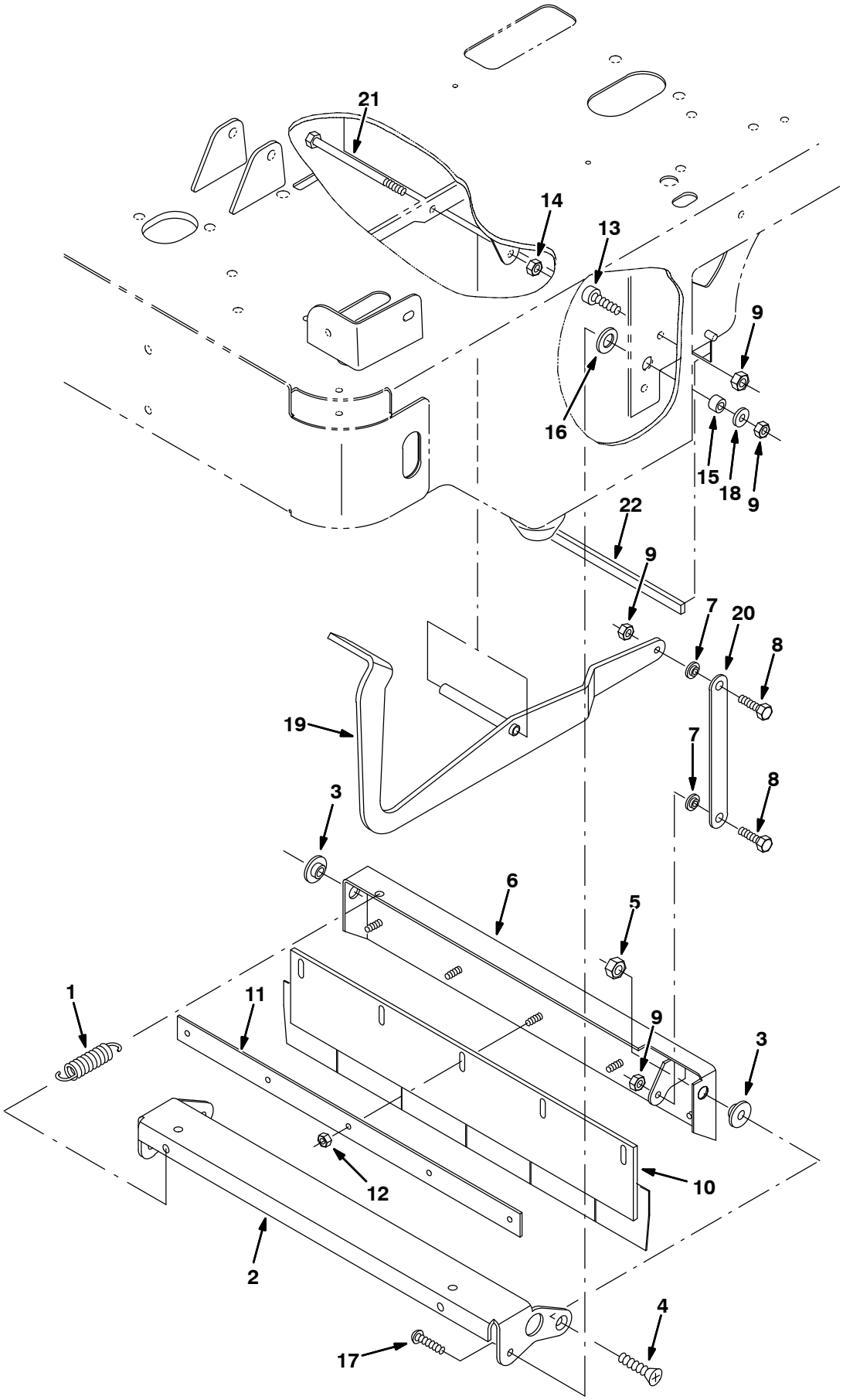

352125 – E

Fig. 19 – Main Brush Front Flap Group

Ref.	Part No.	Serial Number	Description	Qty.
1	75575	(000000–)	Spring, Tension	1
2	81794	(000000–)	Bracket, Skirt, Front	1
3	363087	(000000–)	Spacer, Flanged	2
4	06535	(000000–)	Screw, Flat, M10–1.5 X 35,10.9	2
5	41430	(000000–)	Nut, Hex, Lock, M10–1.5, Nl	2
6	81736	(000000–)	Bracket Wldt, Flap, Front	1
7	01047	(000000–)	Retainer	2
8	16931	(000000–)	Screw, Hex, M08–1.25 X 20, 8.8	2
9	08709	(000000–)	Nut, Hex, Lock, M08–1.25,Nl	6
10	81740	(000000–)	Skirt, Front	1
11	81734	(000000–)	Retainer	1
12	08712	(000000–)	Nut, Hex, Lock, M06–1.0, Nl,Ss	5
13	49609	(000000–)	Screw, Soc, M08–1.25 X 16, Al	2
14	08713	(000000–)	Nut, Hex, Lock, M08–1.25,Nl,Ss	1
15	222556	(000000–)	Sleeve	2
16	20536–1	(000000–)	Washer	2
17	17288	(000000–)	Screw, Btn, M8 X 1.25 X 35, Ss	2
18	32491	(000000–)	Washer, Flat, .31 Hard	2
19	81913	(000000–)	Pedal Wldt	1
20	81759	(000000–)	Plate, Link, Flap	1
21	16946	(000000–)	Screw, Hex, M08–1.25 X150, 8.8	1
22	83425	(000000–)	Seal, Foam Rbr, .25 X .50 X 22.63	1

Fig. 20 – Main Brush Idler Group

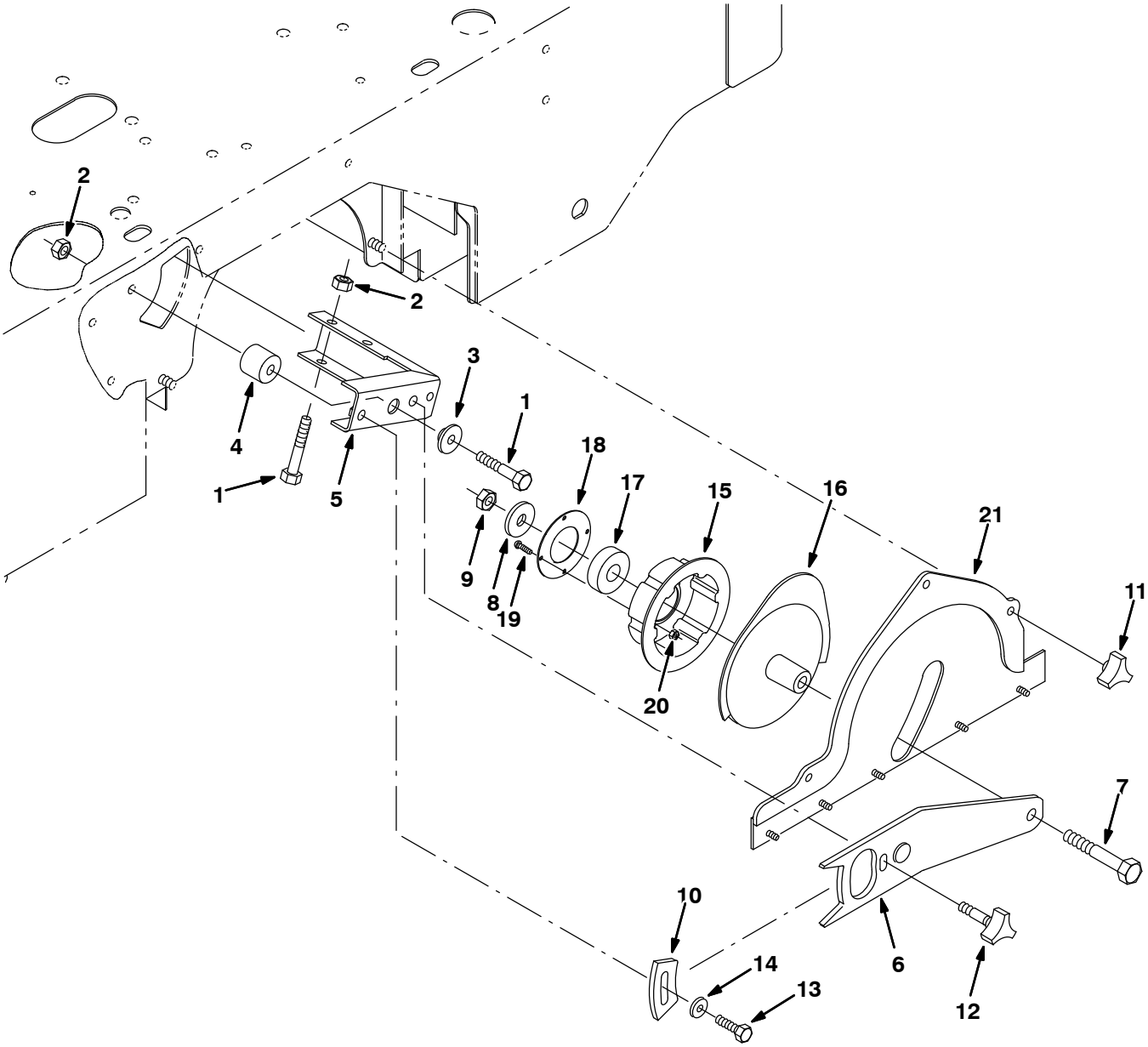

352127 - ALL

Fig. 20 - Main Brush Idler Group

Ref.	Part No.	Serial Number	Description	Qty.
1	06963	(000000-)	Screw, Hex, M10- 1.5 X 60, 8.8	3
2	41430	(000000-)	Nut, Hex, Lock, M10- 1.5, Nl	3
3	363087	(000000-)	Spacer, Flanged	1
4	81729	(000000-)	Spacer	1
5	81731	(000000-)	Bracket, Brush Arm	1
6	81739	(000000-)	Plate, Brush Lift	1
7	12138	(000000-)	Screw, Hex, M12- 1.75 X120, 8.8	1
8	36328	(000000-)	Washer, Bellville .50 Pltd	1
9	09741	(000000-)	Nut, Hex, Lock, M12- 1.75,Nl,Ss	1
10	81884	(000000-)	Plate, Arm Adj	1
10	1077028	(000000-)	Plate, Arm Adj [Gray]	1
11	222470	(000000-)	Knob, M8X1.25 Insert	3
12	83189	(000000-)	Knob Assy	1
13	39277	(000000-)	Screw, Hex, M08- 1.25 X 25, 8.8	1
14	32491	(000000-)	Washer, Flat, .31 Hard	1
15	81818	(000000-)	Plug, Brush, Drive	1
16	81735	(000000-)	Plug Wldt	1
17	46390	(000000-)	Bearing, Ball, 0.79b 1.85d 0.55w	1
18	35836	(000000-)	Retainer	1
19	12312	(000000-)	Screw, Hex, M05- 0.8 X 12, 8.8	4
20	06549	(000000-)	Nut, Hex, Lock, M05- 0.8, Nl	4
21	81775	(000000-)	Brush Door Wldt	1

Fig. 21 – Main Brush Drive Group

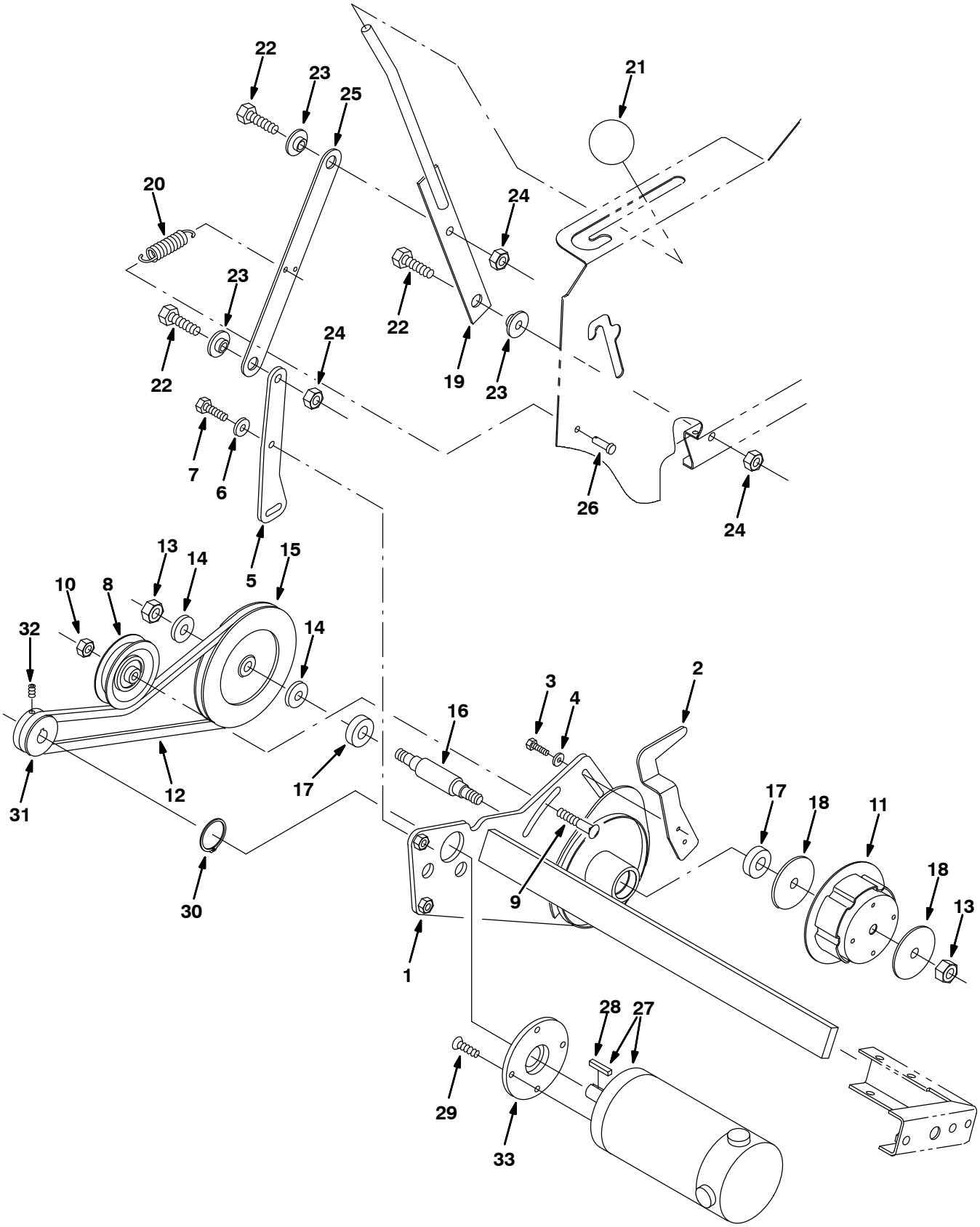

352129 – E

Fig. 21 – Main Brush Drive Group

	Ref.	Part No.	Serial Number	Description	Qty.
	1	81780	(000000–)	Brush Arm Wldt	1
	2	81776	(000000–)	Plate, Door, Brush	1
	3	06943	(000000–)	Screw, Hex, M06–1.0 X 20, 8.8	2
	4	32490	(000000–)	Washer, Flat, .25 Hard	4
	5	81894	(000000–)	Link, Brush Arm	1
	6	32491	(000000–)	Washer, Flat, .31 Hard	2
	7	16931	(000000–)	Screw, Hex, M08–1.25 X 20, 8.8	2
	8	81710	(000000–)	Sheave	1
	9	10820	(000000–)	Bolt, Carriage, .38–16 X 1.25	1
	10	36643	(000000–)	Nut, Hex, Lock, .38–16, Nl	1
	11	81819	(000000–)	Plug, Brush Drive, Splined	1
	12	81899	(000000–)	Belt, 3V	1
	13	35846	(000000–)	Nut, Hex, Std, .50–13, Lh	2
	14	32486	(000000–)	Washer, Flat, .50 Sae	2
	15	81713	(000000–)	Pulley	1
	16	81711	(000000–)	Shaft, Brush Drive	1
	17	28010	(000000–)	Bearing, Ball	2
	18	02384	(000000–)	Washer	2
	19	81769	(000000–)	Handle Wldt	1
	20	25737	(000000–)	Spring, Tension	1
	21	81796	(000000–)	Knob, Round, Press On .50	1
	22	03192	(000000–)	Screw, Hex, M10–1.5 X 30, 8.8	3
	23	363087	(000000–)	Retainer	3
	24	41430	(000000–)	Nut, Hex, Lock, M10–1.5, Nl	2
	25	81733	(000000–)	Strip, Link, Brush Lift	1
	26	46800	(000000–)	Pin, Clevis	1
	27	81940	(000000–002818)	Motor, .6 Hp, 36V, 1800 Rpm (See Breakdowns) (Replaced by 374266)	1
	27	374266	(002819–004222)	Motor, Ele, 36vdc 0.60hp 1800rpm (See Breakdowns) (Replaced by 1055614)	1
▽	27	1055614	(004223–)	Motor, Ele, 36vdc 1800rpm 0.60hp	1
▲	28	00916	(000000–)	Key, Square	1
	29	222692	(000000–)	Screw, Flat, M08–1.25X 25, Ss	4
	30	81798	(000000–)	Ring, Retaining, 32Mm	1
	31	81896	(000000–)	Sheave, 3L	1
	32	09162	(000000–)	Screw, Set, M06–1.0 X 8, Nl	2
	33	81705	(000000–)	Pivot, Motor	1

Fig. 22 – Side Brush Lift Group

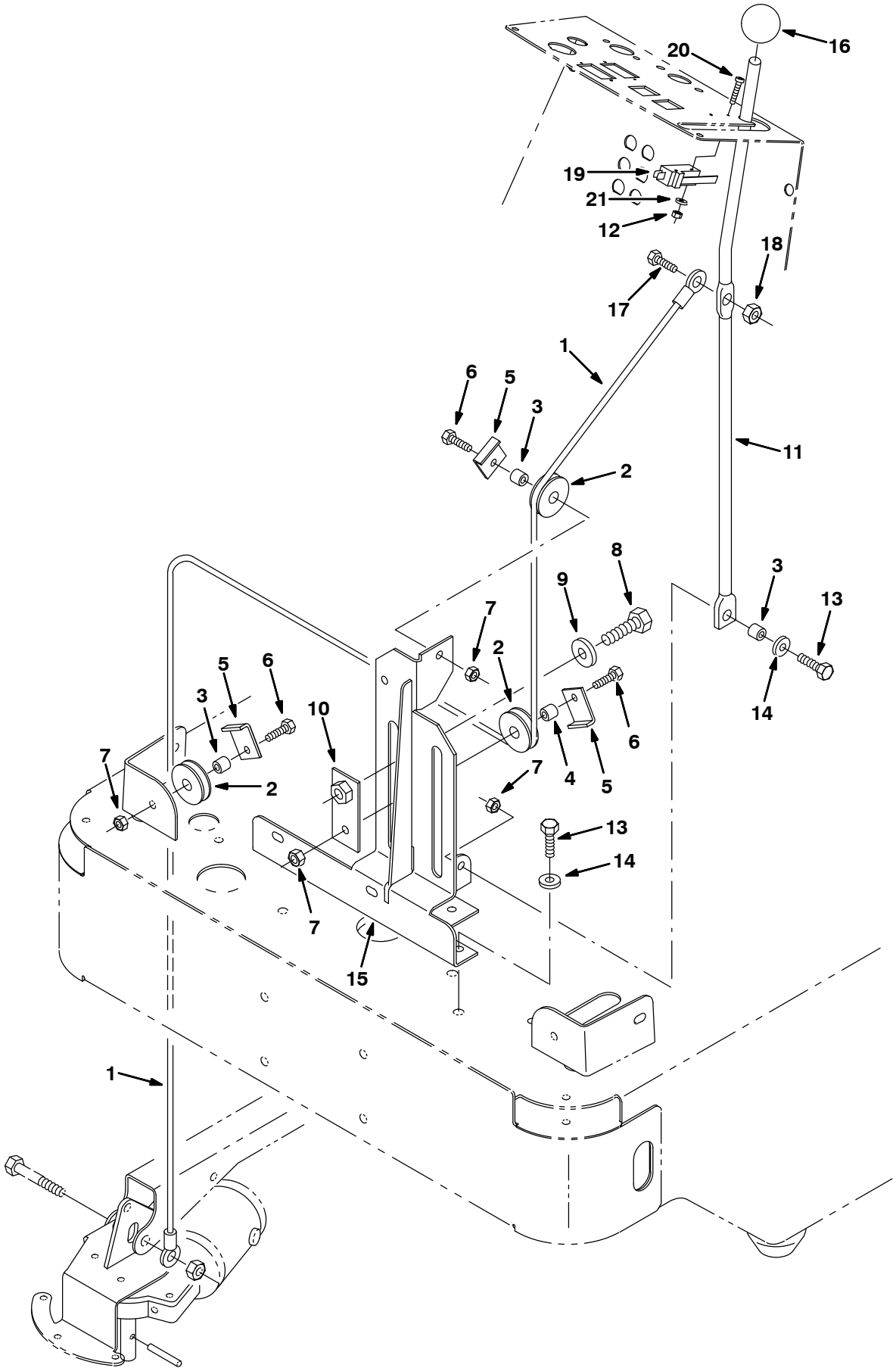

352131 – ALL

Fig. 22 – Side Brush Lift Group

Ref.	Part No.	Serial Number	Description	Qty.
1	81795	(000000–)	Cable, Sidebrush Lift Rh	1
2	369781	(000000–)	Pulley, Cable, 1.5d, Nyl	3
3	222460	(000000–)	Sleeve	3
4	80395	(000000–)	Sleeve	1
5	54400	(000000–)	Angle	3
6	76570	(000000–)	Screw, Hex, M08–1.25 X 30, 8.8	3
7	08709	(000000–)	Nut, Hex, Lock, M08–1.25,Nl	4
8	06967	(000000–)	Scr Hex M12X1.75 20	1
9	32493	(000000–)	Washer, Flat, .50 Hard	1
10	81955	(000000–)	Plate, Sidebrush Lift	1
11	81956	(000000–)	Handle	1
12	01754	(000000–)	Nut, Hex, Std, M03–0.5	2
13	39277	(000000–)	Screw, Hex, M08–1.25 X 25, 8.8	4
14	32491	(000000–)	Washer, Flat, .31 Hard	4
15	81959	(000000–)	Support Wldt, Side Brush	1
16	81796	(000000–)	Knob, Round, Press On .50	1
17	06944	(000000–)	Screw, Hex, M06–1.0 X 25, 8.8	1
18	08708	(000000–)	Nut, Hex, Lock, M06–1.0, Nl	1
19	1008142	(000000–)	Switch, Snap Actn, 250vdc 25a Spdt	1
20	06923	(000000–)	Screw, Pan, M03–0.5 X 25, 4.8	2
21	39658	(000000–)	Washer, Lock, Int, #04	2

Fig. 23 – Side Brush Lift Group (Japan Only)

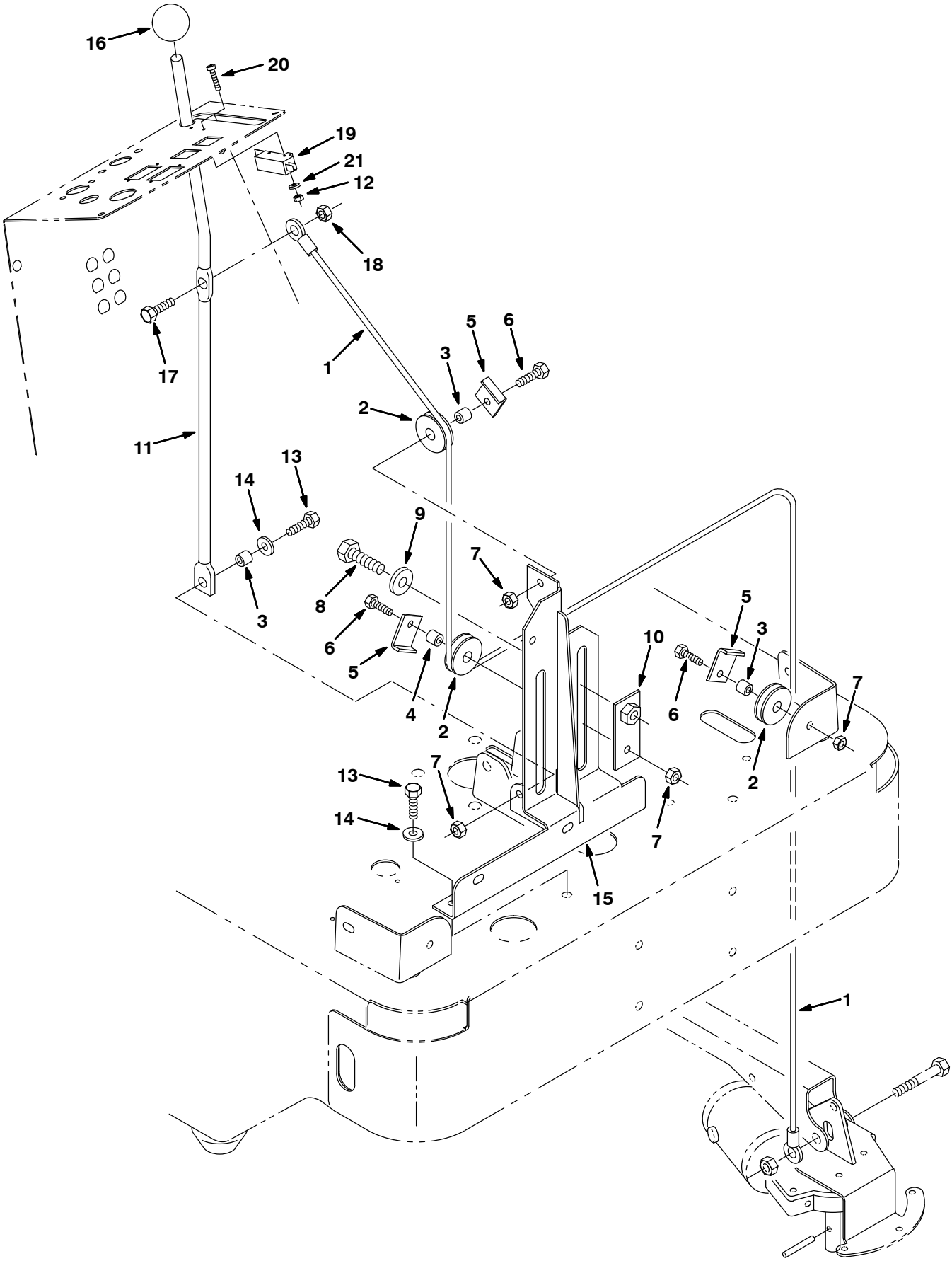

353196 – E

Fig. 23 – Side Brush Lift Group (Japan Only)

Ref.	Part No.	Serial Number	Description	Qty.
1	81785	(000000–)	Cable, Glv .13d 031.3l .25eye /.50eye	1
2	369781	(000000–)	Pulley, Cable, 1.5d, Nyl	3
3	222460	(000000–)	Sleeve	3
4	80395	(000000–)	Sleeve	1
5	54400	(000000–)	Angle	3
6	76570	(000000–)	Screw, Hex, M08–1.25 X 30, 8.8	3
7	08709	(000000–)	Nut, Hex, Lock, M08–1.25,Nl	4
8	06967	(000000–)	Scr Hex M12X1.75 20	1
9	32493	(000000–)	Washer, Flat, .50 Hard	1
10	81955	(000000–)	Plate, Sidebrush Lift	1
11	81956	(000000–)	Handle	1
12	01754	(000000–)	Nut, Hex, Std, M03–0.5	2
13	39277	(000000–)	Screw, Hex, M08–1.25 X 25, 8.8	4
14	32491	(000000–)	Washer, Flat, .31 Hard	4
15	81959	(000000–)	Support Wldt, Side Brush	1
16	81796	(000000–)	Knob, Round, Press On .50	1
17	06944	(000000–)	Screw, Hex, M06–1.0 X 25, 8.8	1
18	08708	(000000–)	Nut, Hex, Lock, M06–1.0, Nl	1
19	1008142	(000000–)	Switch, Snap Actn, 250vdc 25a Spdt	1
20	06923	(000000–)	Screw, Pan, M03–0.5 X 25, 4.8	2
21	39658	(000000–)	Washer, Lock, Int, #04	2

Fig. 24 – Side Brush Motor Group

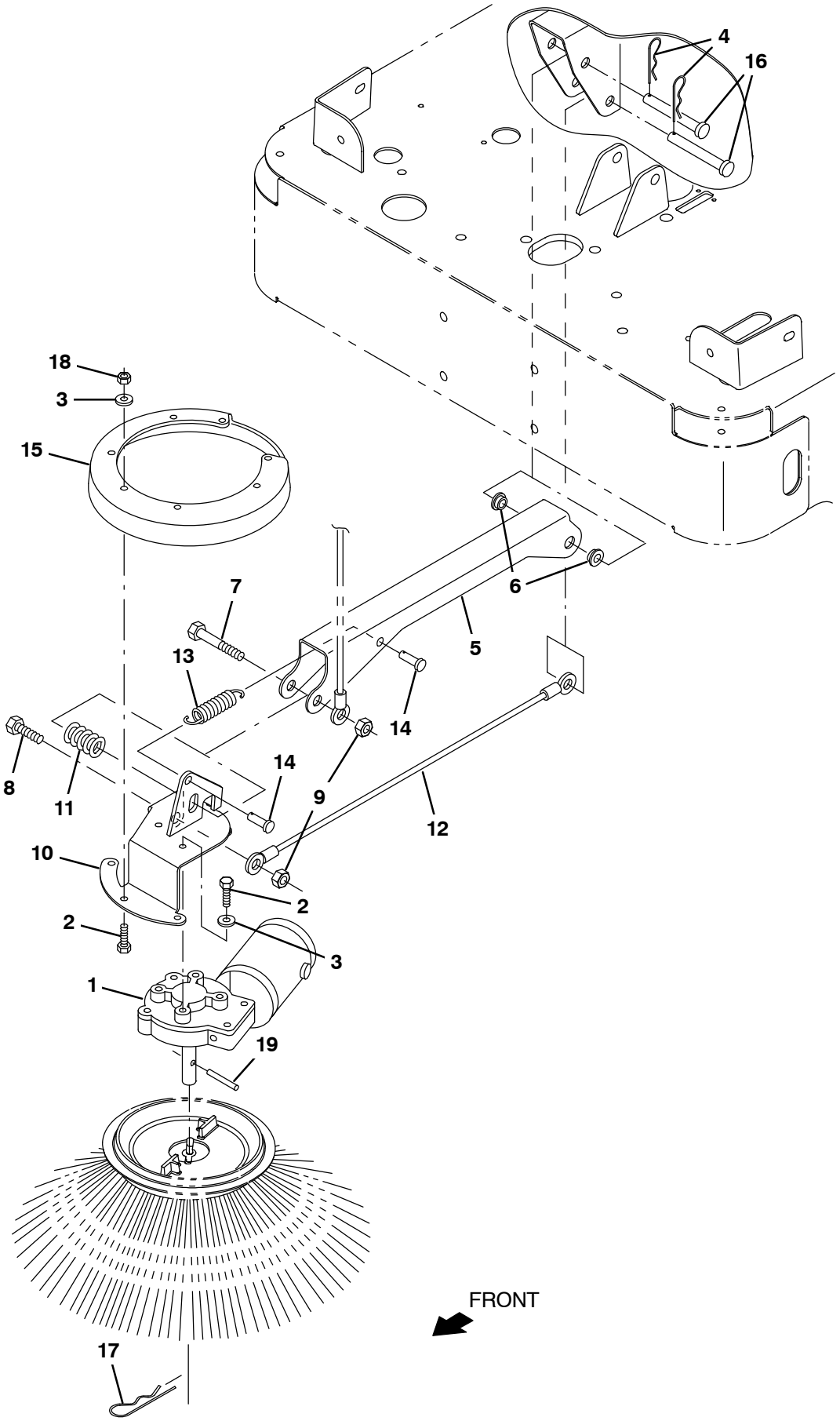

352133 – E

Fig. 24 – Side Brush Motor Group

	Ref.	Part No.	Serial Number	Description	Qty.
▽	1	1008274	(000000–)	Motor, Ele, 36vdc 0.08hp 0068rpm 04.5a	1
▲		81919	(000000–)	Brush&Spring Assy Se	2
▲		80127	(000000–)	Cap, Brush	2
▲		369795	(000000–)	Brushholder	2
▲		369796	(000000–)	Clip	2
	2	15678	(000000–)	Screw, Hex, M06–1.0 X 16, Ss	9
	3	01684	(000000–)	Washer, Flat, .25 Ss	9
	4	44906	(000000–)	Pin, Cotter, Hair, 0.38d .093 Wir	2
	5	81783	(000000–)	Channel, Mtg, Sidebrush	1
	6	15648	(000000–)	Bearing, Flange	2
	7	06972	(000000–)	Screw, Hex, M12–1.75 X 60, 8.8	1
	8	41345	(000000–)	Screw, Hex, M12–1.75 X 25, 8.8	1
	9	08711	(000000–)	Nut, Hex, Lock, M12–1.75,Nl	2
	10	81786	(000000–)	Bracket Wldt, Sidebrush	1
	11	87242	(000000–)	Spring, Die .50 Id 1.00 Od 1.25	1
	12	81784	(000000–)	Cable, Sidebrush	1
	13	15047	(000000–)	Spring, Extension	1
	14	39019	(000000–)	Pin, Clevis	2
	15	81822	(000000–)	Guard,Sidebrush	1
	16	06279	(000000–)	Pin, Clevis	2
	17	02942	(000000–)	Pin, Hair, Cotter, 0.62d .120 Wir	1
	18	08712	(000000–)	Nut, Hex, Lock, M06–1.0, Nl,Ss	5
	19	11516	(000000–)	Pin	1

Fig. 25 – Side Brush Motor Group (Japan Only)

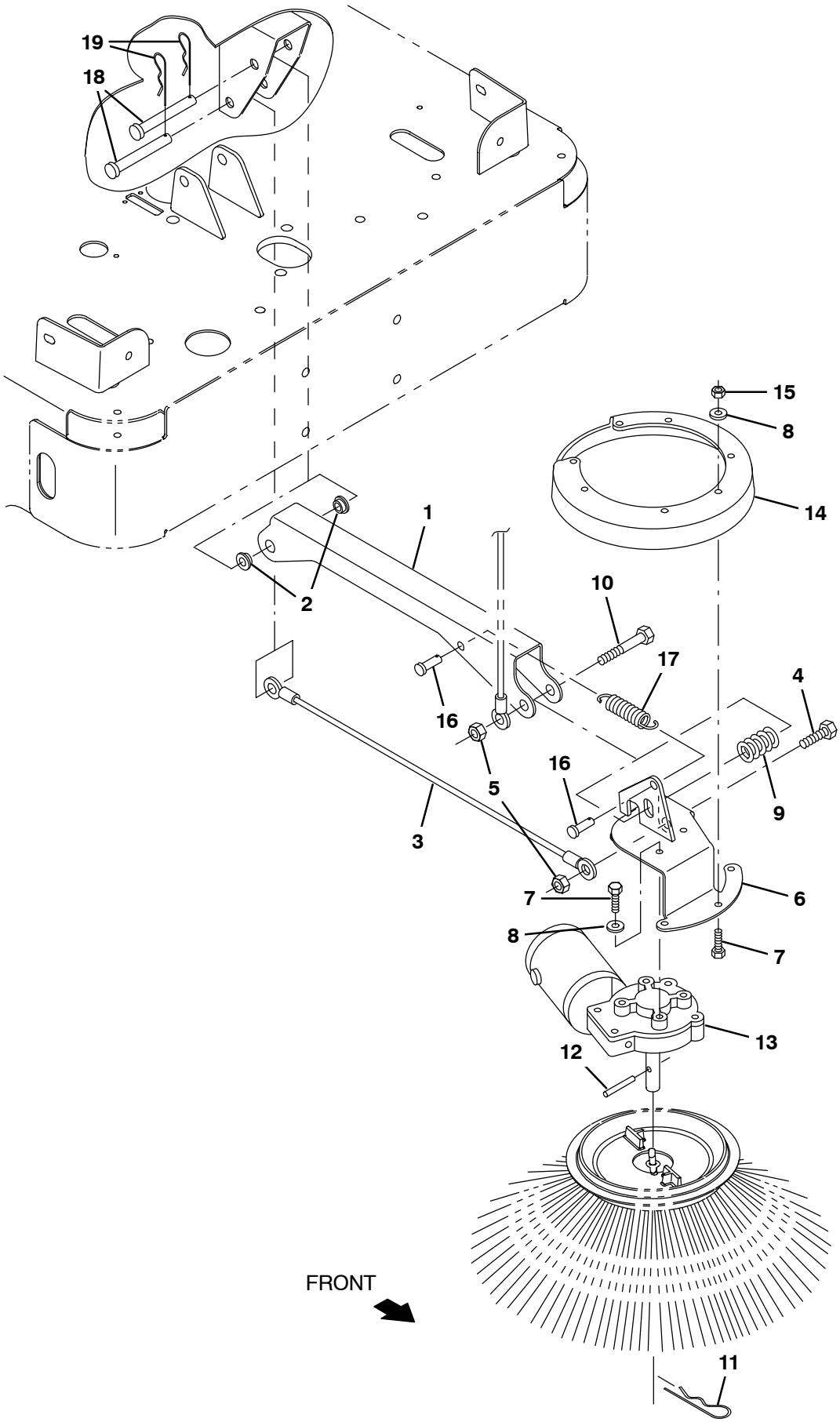

356583 – E

Fig. 25 – Side Brush Motor Group (Japan Only)

	Ref.	Part No.	Serial Number	Description	Qty.
	1	81783	(000000–)	Channel, Mtg, Sidebrush	1
	2	15648	(000000–)	Bearing, Flange	2
	3	81784	(000000–)	Cable, Sidebrush	1
	4	41345	(000000–)	Screw, Hex, M12–1.75 X 25, 8.8	1
	5	08711	(000000–)	Nut, Hex, Lock, M12–1.75,Nl	2
	6	81750	(000000–)	Bracket Wldt, Sidebrush	1
	7	15678	(000000–)	Screw, Hex, M06–1.0 X 16, Ss	9
	8	01684	(000000–)	Washer, Flat, .25 Ss	9
	9	87242	(000000–)	Spring,Die .50 Id 1.00 Od 1.25	1
	10	06972	(000000–)	Screw, Hex, M12–1.75 X 60, 8.8	1
	11	02942	(000000–)	Pin, Hair Cotter	1
	12	11516	(000000–)	Pin	1
▽	13	1008275	(000000–)	Motor, Ele, 36vdc 0.08hp 0068rpm 04.5a	1
▲		81919	(000000–)	Brush&Spring Assy Se	2
▲		80127	(000000–)	Cap, Brush	2
▲		369795	(000000–)	Brushholder	2
▲		369796	(000000–)	Clip	2
	14	81822	(000000–)	Guard,Sidebrush	1
	15	08712	(000000–)	Nut, Hex, Lock, M06–1.0, Nl,Ss	5
	16	39019	(000000–)	Pin, Clevis	2
	17	15047	(000000–)	Spring, Extension	1
	18	06279	(000000–)	Pin, Clevis	2
	19	44906	(000000–)	Pin, Hair Cotter	2

Fig. 26 – Vacuum Fan Group

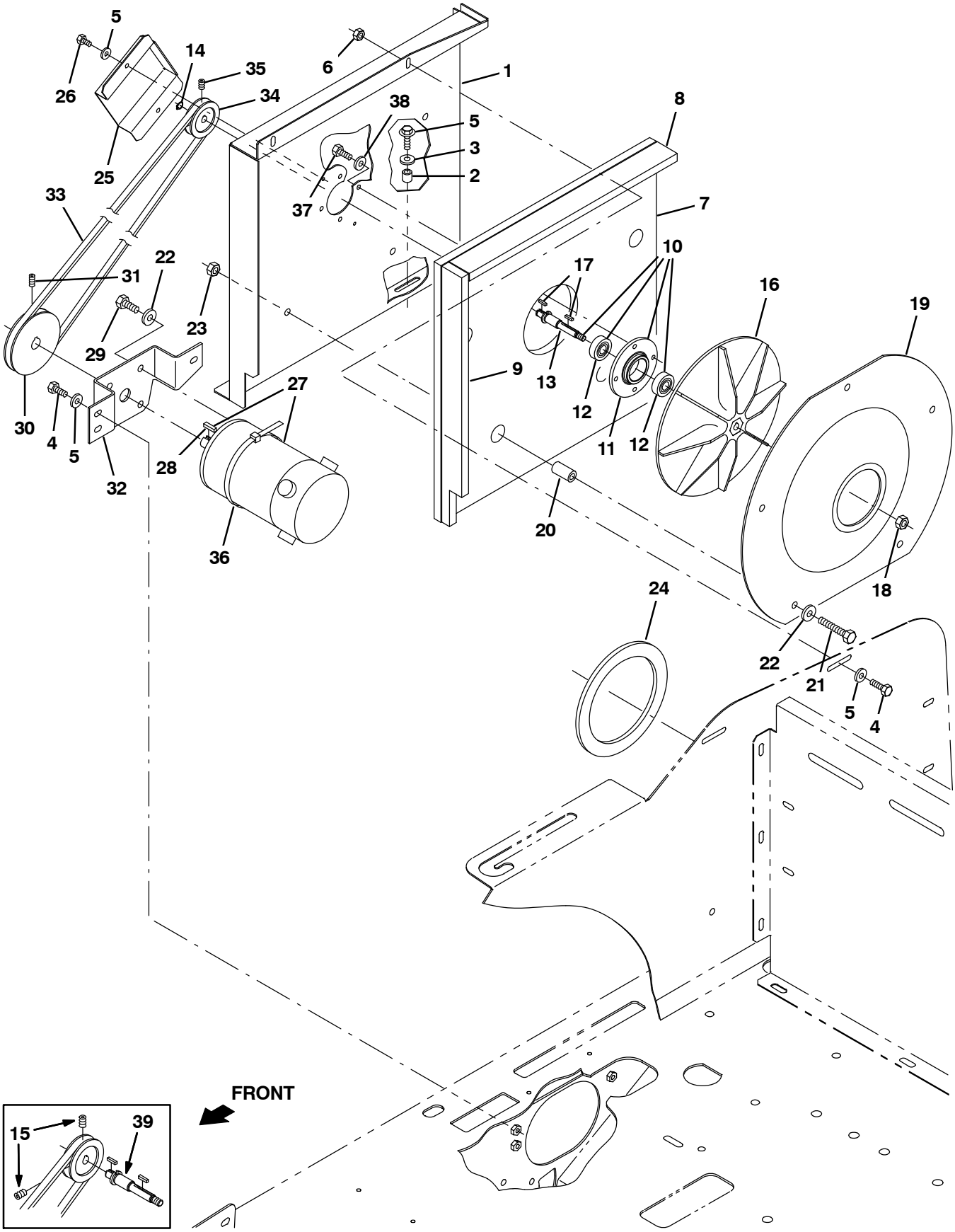

352135 – E

Fig. 26 – Vacuum Fan Group

	Ref.	Part No.	Serial Number	Description	Qty.
	1	81848	(000000–)	Plate, Housing, Bearing	1
	2	222460	(000000–)	Sleeve	2
	3	222159	(000000–)	Screw, Hex, Fmg, M06–1.0 X 25	2
	4	06942	(000000–)	Screw, Hex, M06–1.0 X 16, 8.8	5
	5	32490	(000000–)	Washer, Flat, .25 Hard	9
	6	08708	(000000–)	Nut, Hex, Lock, M06–1.0, Nl	2
	7	81843	(000000–)	Insulation, Acoustic	1
	8	81844	(000000–)	Insulation, Acoustic	1
	9	81845	(000000–)	Insulation, Acoustic	1
▽	10	83038	(000000–)	Bearing Assy, Vac Fan	1
▲	11	81838	(000000–)	Housing, Bearing	1
▲	12	81830	(000000–)	Bearing, Ball	2
▲	13	1039403	(003771–)	Shaft, Drive, Vacfan, .66d 03.4l	1
▲	14	23524–1	(003771–)	Ring, Retaining, Ext, 0.38d, [Selflock]	1
	15	09162	(000000–003770)	Screw, Set, M06–1.0 X 8, Nl	2
	16	81890	(000000–)	Impeller, 9.06 D X 0.375 B	1
	17	00960	(000000–)	Key, Square	2
	18	87299	(000000–)	Nut, Hex, Flexlock, .31–24	1
	19	81842	(000000–)	Plate, Inlet, Fan (Painted)	1
	20	363301	(000000–)	Sleeve	5
	21	39278	(000000–)	Screw, Hex, M08–1.25 X 50, 8.8	5
	22	32491	(000000–)	Washer, Flat, .31 Hard	9
	23	08709	(000000–)	Nut, Hex, Lock, M08–1.25,Nl	5
	24	81891	(000000–)	Seal, Vac Fan	1
	25	81917	(000000–)	Guard, Fan Sheave	1
	26	87308	(000000–)	Screw, Hex, M06–1.0 X 12	2
	27	222409	(000000–002818)	Motor, .75Hp, 36V, 2500Rpm (See Breakdowns) (Replaced by 374201)	1
▽	27	374201	(002819–004212)	Motor, Ele, 36vdc 0.75hp 2500rpm (See Breakdowns) (Replaced by 1053284)	1
▲	28	00912	(002819–004212)	Key, Square	1
▽	27	1053284	(004213–)	Motor, Ele, 36vdc 2500rpm 0.75hp (See Breakdowns)	1
▲	28	00912	(004213–)	Key, Square	1
	29	16932	(000000–)	Screw, Hex, M08–1.25 X 20, 8.8	4
	30	81875	(000000–)	Sheave, 3L,1G,3.519Pd,0.625Id	1
	31	01750	(000000–)	Screw, Set, M06–1.0 X 16, 45H	2
	32	81876	(000000–)	Bracket, Mounting, Motor	1
	33	384432	(000000–)	Belt, V 3L520	1
	34	81835	(000000–)	Sheave, 3L,1G,2.011Pd,0.375Id	1
	35	09162	(003771–)	Screw, Set, M06–1.0 X 8, Nl	1
	36	44961	(000000–)	Tie, Cable 4.00 Max 14.50Lg	1
	37	11635	(000000–)	Screw, Hex, M06–1.0 X 12, Ss	4
	38	41185	(000000–)	Washer, Belleville, .25	4
	39	81828	(000000–003770)	Shaft, Drive, Vacfan (Replaced by1039403)	1

Fig. 27 – Vacuum Fan Box Group

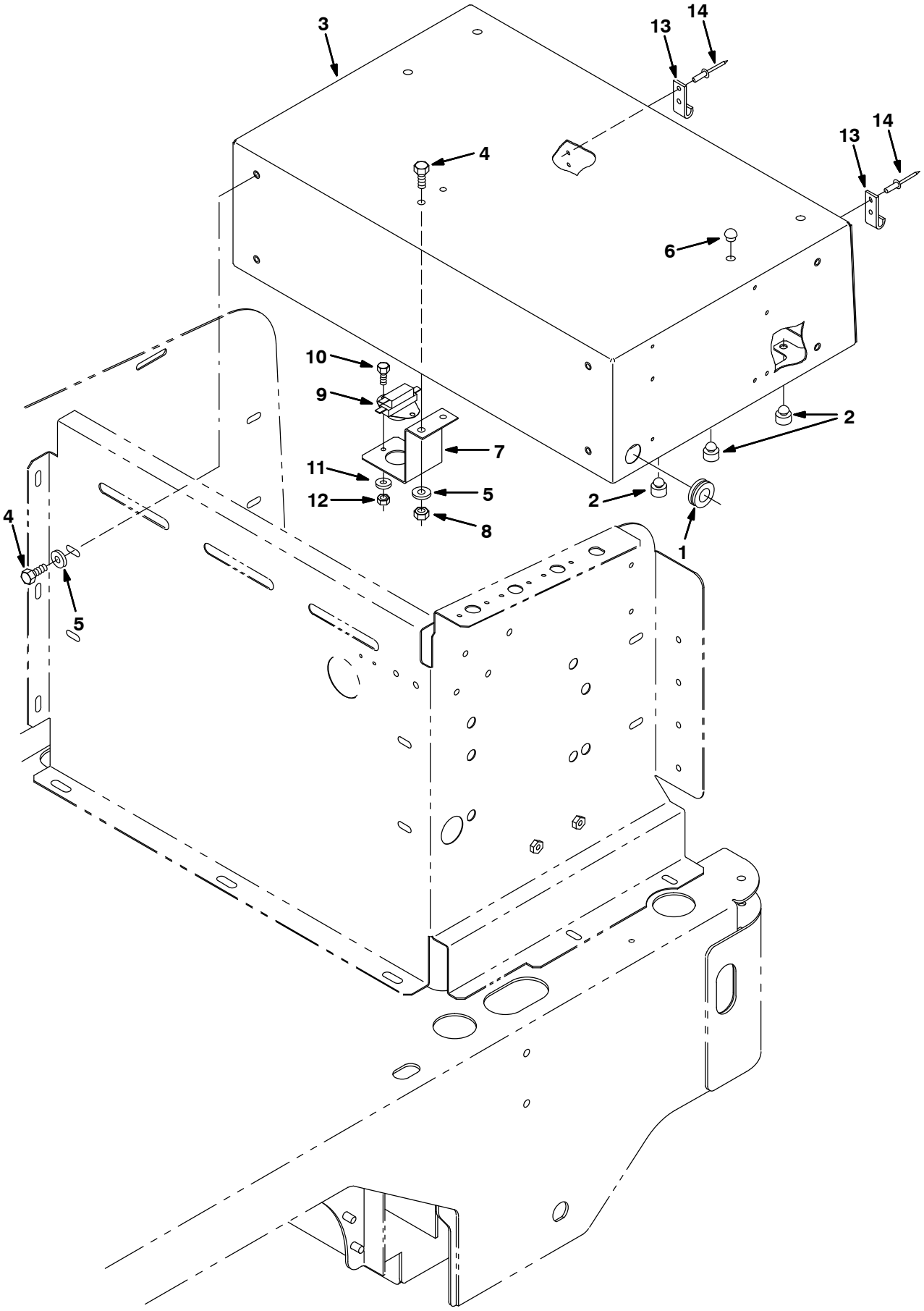

352137 – E

Fig. 27 – Vacuum Fan Box Group

Ref.	Part No.	Serial Number	Description	Qty.
1	81697	(000000–)	Grommet, Rubber	1
2	83165	(000000–)	Bumper, Rubber	3
3	83123	(000000–008000)	Box Assy, Vacuum W/Label	1
3	9021365	(008001–)	Filterbox Assy W/ Label [Gray]	1
3	384435	(000000–008000)	Box Assy, Vacuum W/Label (Japan Only)	1
3	9021364	(008001–)	Filterbox Assy W/ Label, Tj [Gray] (Japan Only)	1
4	06942	(000000–)	Screw, Hex, M06–1.0 X 16, 8.8	10
5	32490	(000000–)	Washer, Flat, .25 Hard	10
6	33806	(000000–)	Button, Plug	4
7	81963	(000000–)	Bracket, Thermal Sensor	1
8	08708	(000000–)	Nut, Hex, Lock, M06–1.0, Nl	2
9	367679	(000000–)	Thermostat, Spdt Switch	1
10	09206	(000000–)	Screw, Hex, M04–0.7 X 12, 8.8	2
11	19065	(000000–)	Washer, Flat, #08	2
12	02850	(000000–)	Nut, Hex, Lock, M04–0.7, Nl	2
13	81816	(000000–)	Bracket, Latch	2
14	06524	(000000–)	Rivet, Pop	4

Fig. 28 – Hopper Group

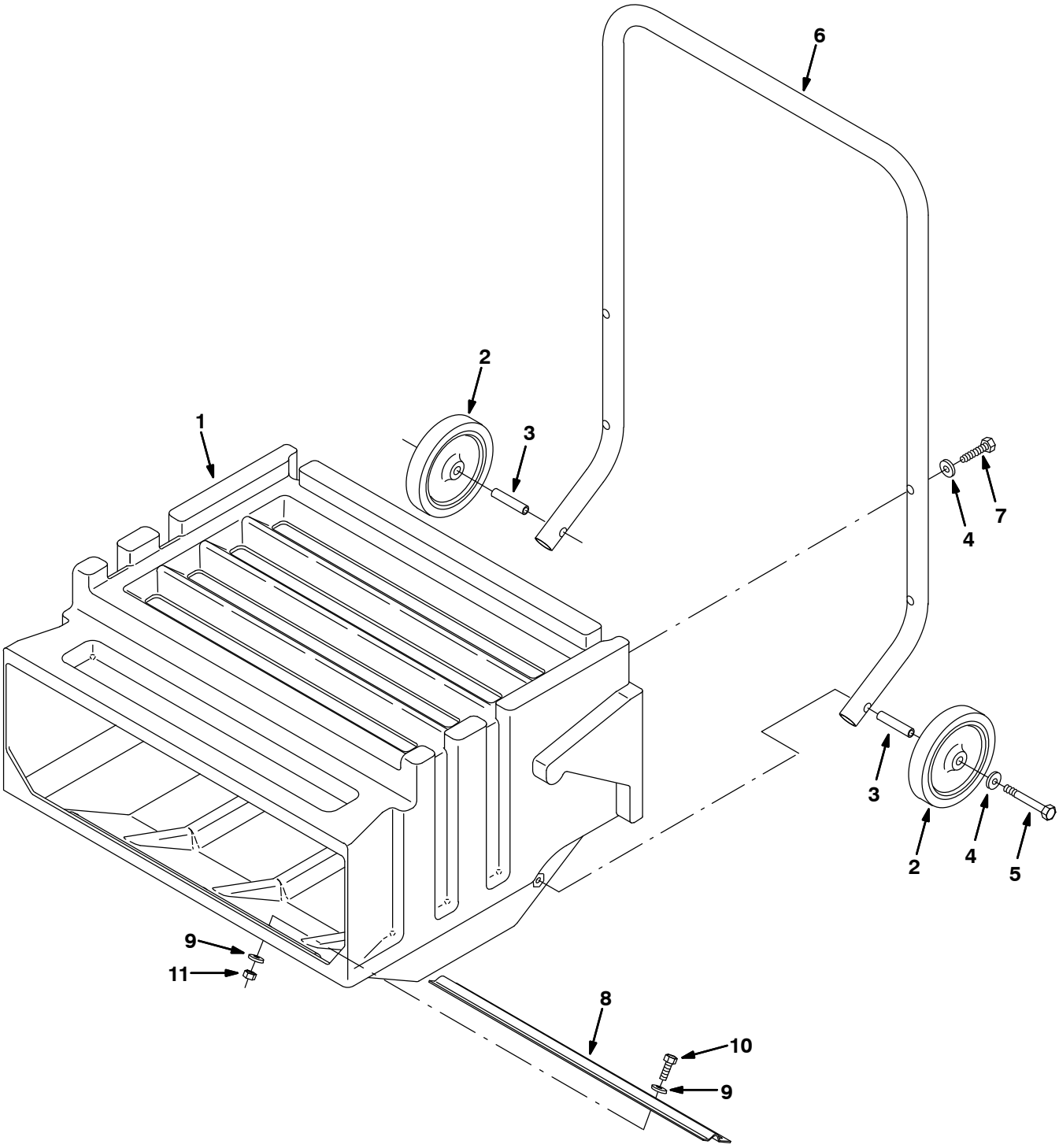

352139 – ALL

Fig. 28 – Hopper Group

Ref.	Part No.	Serial Number	Description	Qty.
1	83447	(000000–)	Hopper, Rear	1
2	81860	(000000–)	Wheel, Hopper	2
3	81870	(000000–)	Tube, Axle	2
4	32491	(000000–)	Washer, Flat, .31 Hard	6
5	39279	(000000–)	Screw, Hex, M08–1.25 X 70, 8.8	2
6	81911	(000000–008000)	Handle, Hopper, (Painted)	1
6	1076987	(008001–)	Handle, Hppr [Gray]	1
7	41342	(000000–)	Screw, Hex, M08–1.25 X 40, 8.8	4
8	384413	(000000–)	Bracket, Lip, Hopper	1
9	32490	(000000–)	Washer, Flat, .25 Hard	10
10	08716	(000000–)	Screw, Hex, M06–1.0 X 20, Ss	5
11	08708	(000000–)	Nut, Hex, Lock, M06–1.0, Nl	5

Fig. 29 – Filter Shaker Group

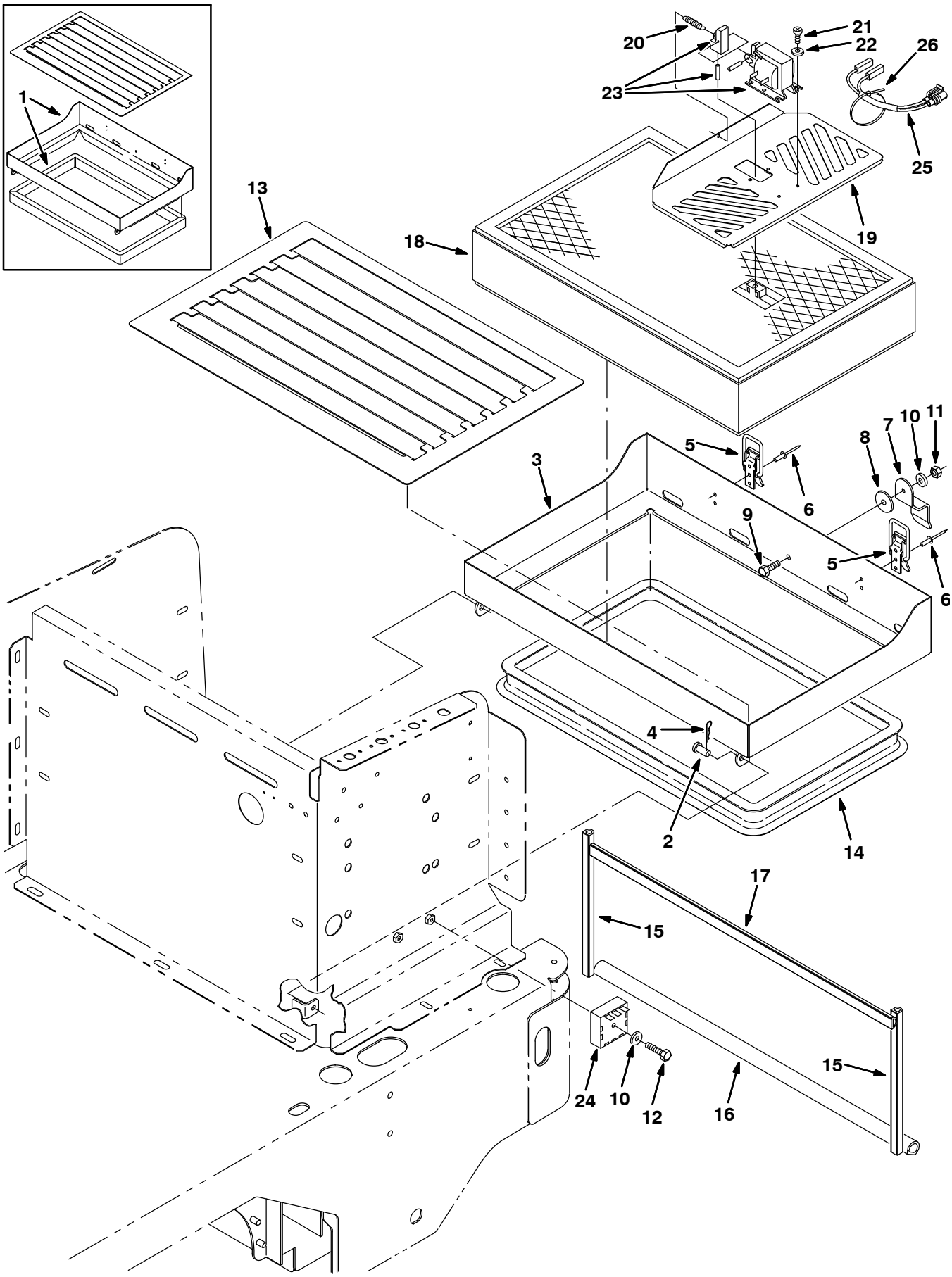

352141 – E

Fig. 29 – Filter Shaker Group

	Ref.	Part No.	Serial Number	Description	Qty.
	1	83542	(000000–001215)	Panel Assy, Filter	1
	2	46800	(000000–)	Pin, Clevis	2
	3	83439	(001216–008000)	Panel Weldt, Filter	1
	3	1076986	(008001–)	Panel Wldt, Fltr [Gray]	1
	4	08085	(000000–)	Pin, Haircotter .31D .058Wire	2
	5	23709	(000000–)	Catch, Draw Pull	2
	6	41732	(000000–)	Rivet, Pop	4
	7	81889	(000000–)	Bracket, Latch, Hopper	1
	8	33518	(000000–)	Washer	1
	9	06943	(000000–)	Screw, Hex, M06–1.0 X 20, 8.8	1
	10	32490	(000000–)	Washer, Flat, .25 Hard	2
	11	08708	(000000–)	Nut, Hex, Lock, M06–1.0, Nl	1
	12	06945	(000000–)	Screw, Hex, M06–1.0 X 30, 8.8	1
	13	83427	(001216–008000)	Panel, Perma–Filter	1
	13	1076989	(008001–)	Panel, Perma–Filter [Gray]	1
	14	83426	(001216–)	Gasket, Filter Panel	1
▽		83039	(000000–)	Seal Kit, Hopper	1
▲	15	81965	(000000–)	Seal, Bulb .50 X .50 X 9.19Lg	2
▲	16	83115	(000000–)	Seal, Foam, Extrusion 23.5	1
▲	17	81966	(000000–)	Seal, Bulb .38 X .75 X 22.62Lg	1
	18	1037209AM	(000000–)	Filter, Panl, Dust, 4.2 X 13.3 X 21.0	1
	19	81803	(000000–)	Panel Wldt, Shaker	1
	20	1045426	(000000–)	Spring, Extn, 0.43od 0.05wir 01.4l	1
	21	49697	(000000–)	Screw, Pan, M04–0.7 X 10, Ss	4
	22	19065	(000000–)	Washer, Flat, #08	4
	23	379891	(000000–)	Solenoid Assy, Filter Shaker,	1
	24	81922	(000000–)	Timer, 36vdc, [25hz Pwm, 70 Per Duty]	1
	25	83384	(001286–)	Harness, Shaker	1
	26	49266	(001286–)	Tie, Cable 1.75D Max 7.50Lg	1

Fig. 30 – Battery Group

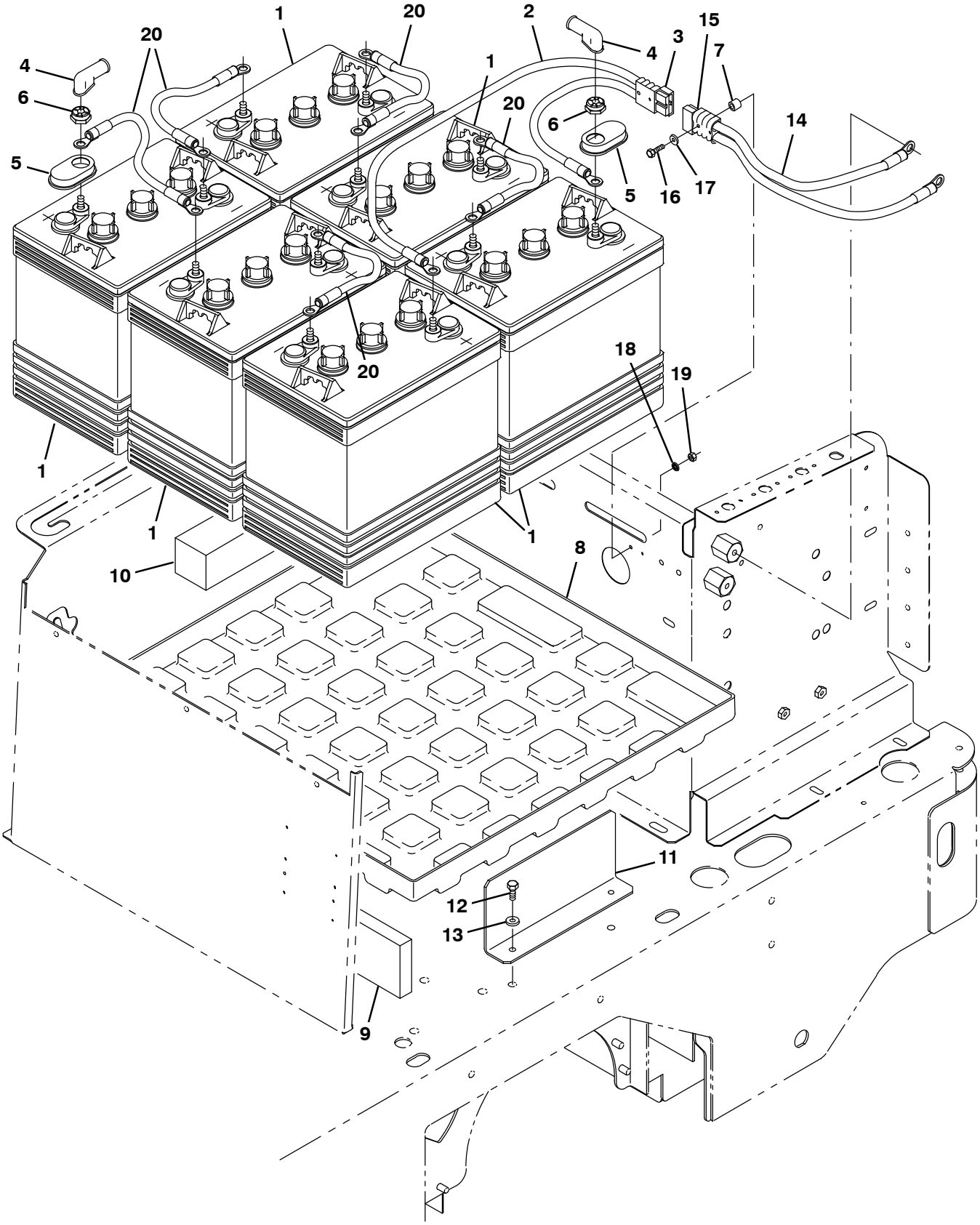

352144 – E

Fig. 30 – Battery Group

	Ref.	Part No.	Serial Number	Description	Qty.
	1	10155	(000000–)	Battery, 6V, Wet	6
▽	2	222217	(000000–)	Harness, Cable, Battery	1
▲	3	130155	(000000–)	Connector, Battery, 6ga 50a, Gray[2cont]	1
	4	02076	(000000–)	Boot	12
	5	1041030	(000000–)	Cap, Battery	12
	6	87435	(000000–)	Nut, Hex, Flexlock, .31–18	12
	7	65742	(000000–)	Tube, 0.38D 0.17B 0.4L	2
	8	83414	(000000–)	Tray, Battery	1
	9	222473	(000000–)	Spacer	1
	10	83415	(000000–)	Spacer, Battery 2.0 X 2.0 X 11	1
	11	83417	(000000–)	Bracket, Battery Brace	1
	12	06942	(000000–)	Screw, Hex, M06–1.0 X 16, 8.8	2
	13	32483	(000000–)	Washer, Flat, .25 Sae	2
▽	14	83411	(000000–)	Harness, Cable, Battery, Main	1
▲	15	130155	(000000–)	Connector, Battery, 6ga 50a, Gray[2cont]	1
	16	06924	(000000–)	Screw, Pan, M03–0.5 X 30, 4.8	2
	17	19064	(000000–)	Washer, Flat, #06	2
	18	32975	(000000–)	Washer, Lock, Int, #06	2
	19	01754	(000000–)	Nut Hex, Std, M03–0.5	2
	20	63740	(000000–)	Cable, Battery	5

Fig. 31 – Electrical Schematic (000000–002014)

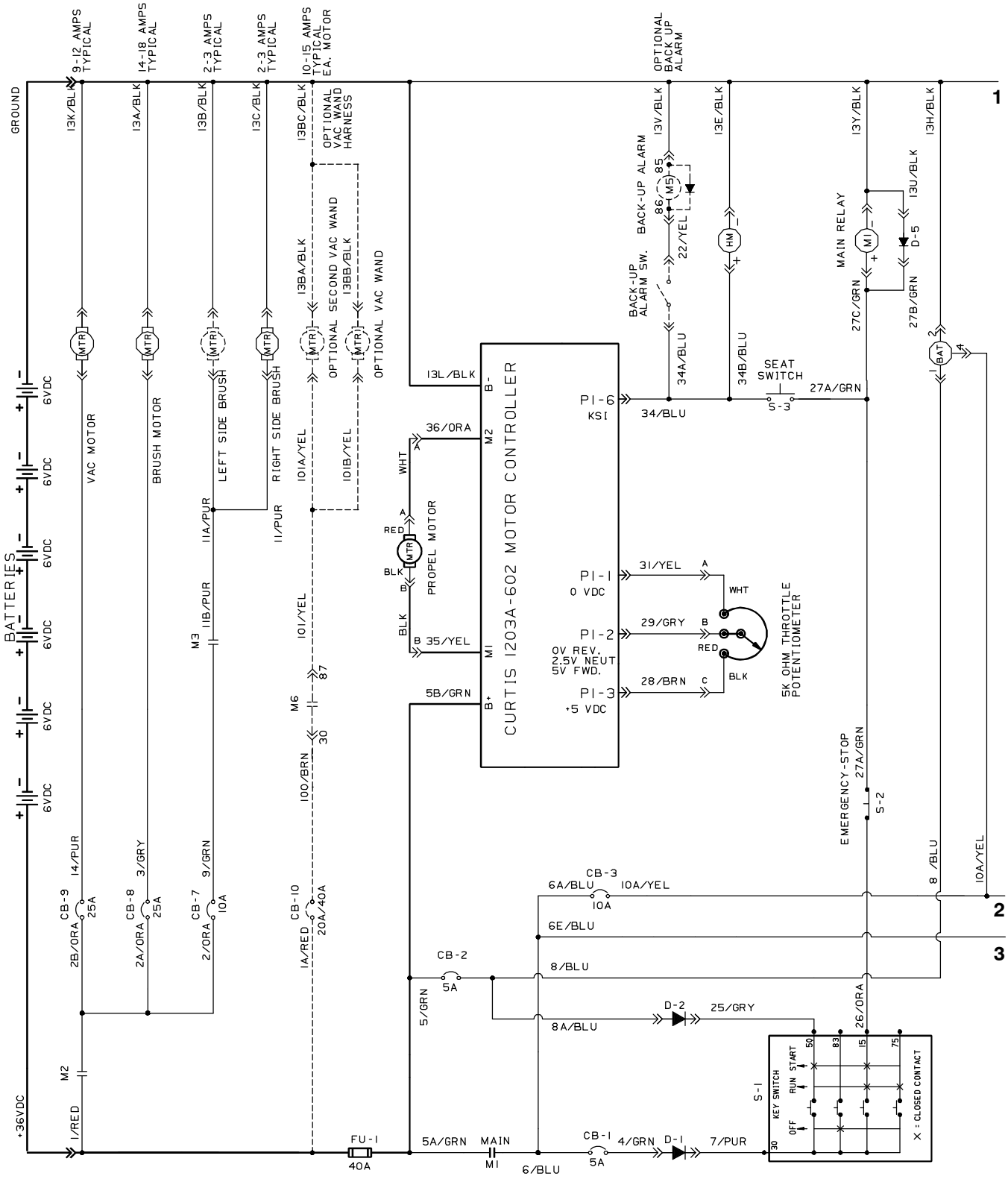

Fig. 31 – Electrical Schematic (000000–002014)

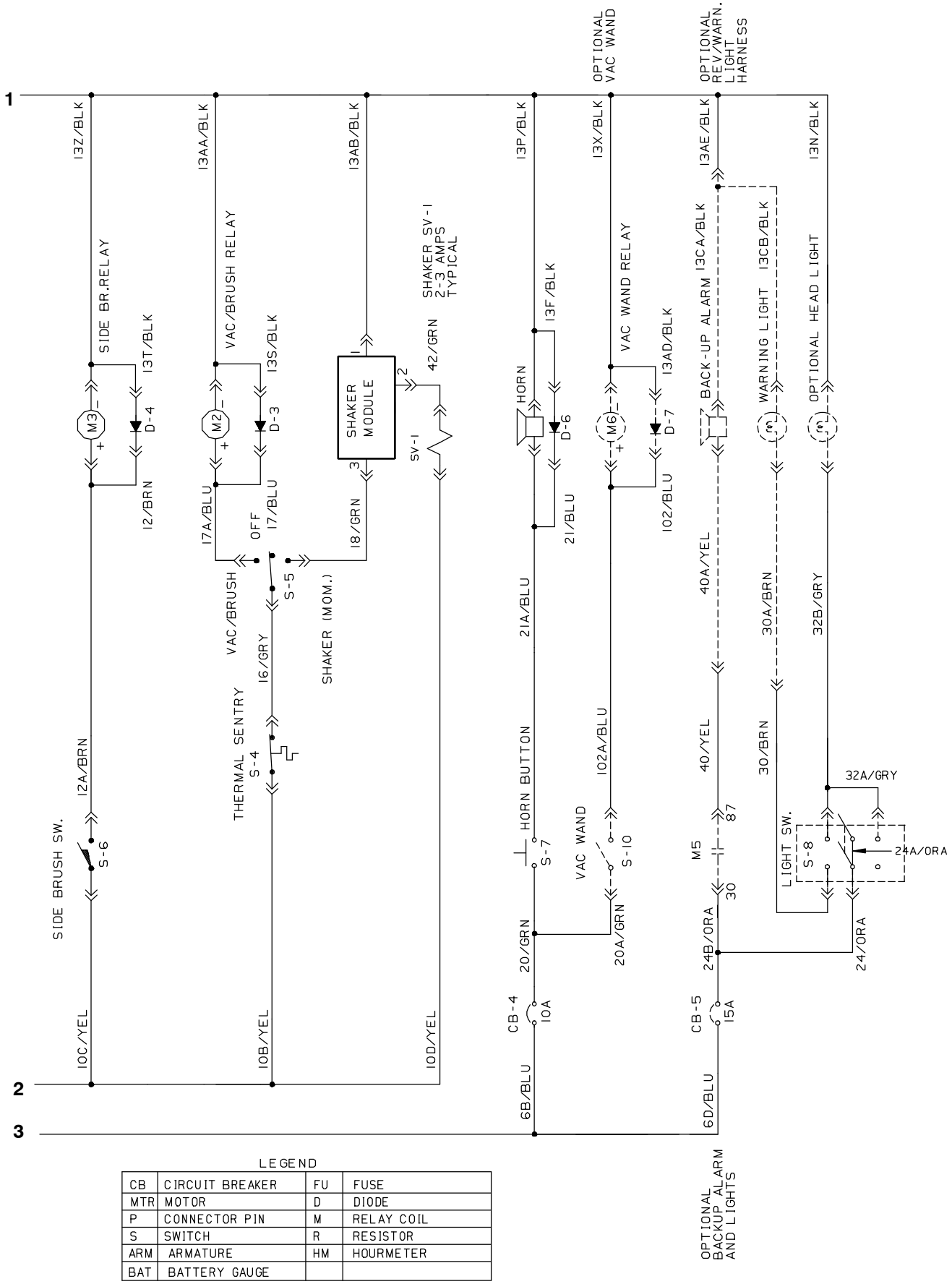

LEGEND

CB	CIRCUIT BREAKER	FU	FUSE
MTR	MOTOR	D	DIODE
P	CONNECTOR PIN	M	RELAY COIL
S	SWITCH	R	RESISTOR
ARM	ARMATURE	HM	HOURMETER
BAT	BATTERY GAUGE		

81921

Fig. 32 – Electrical Schematic (002015–005103)

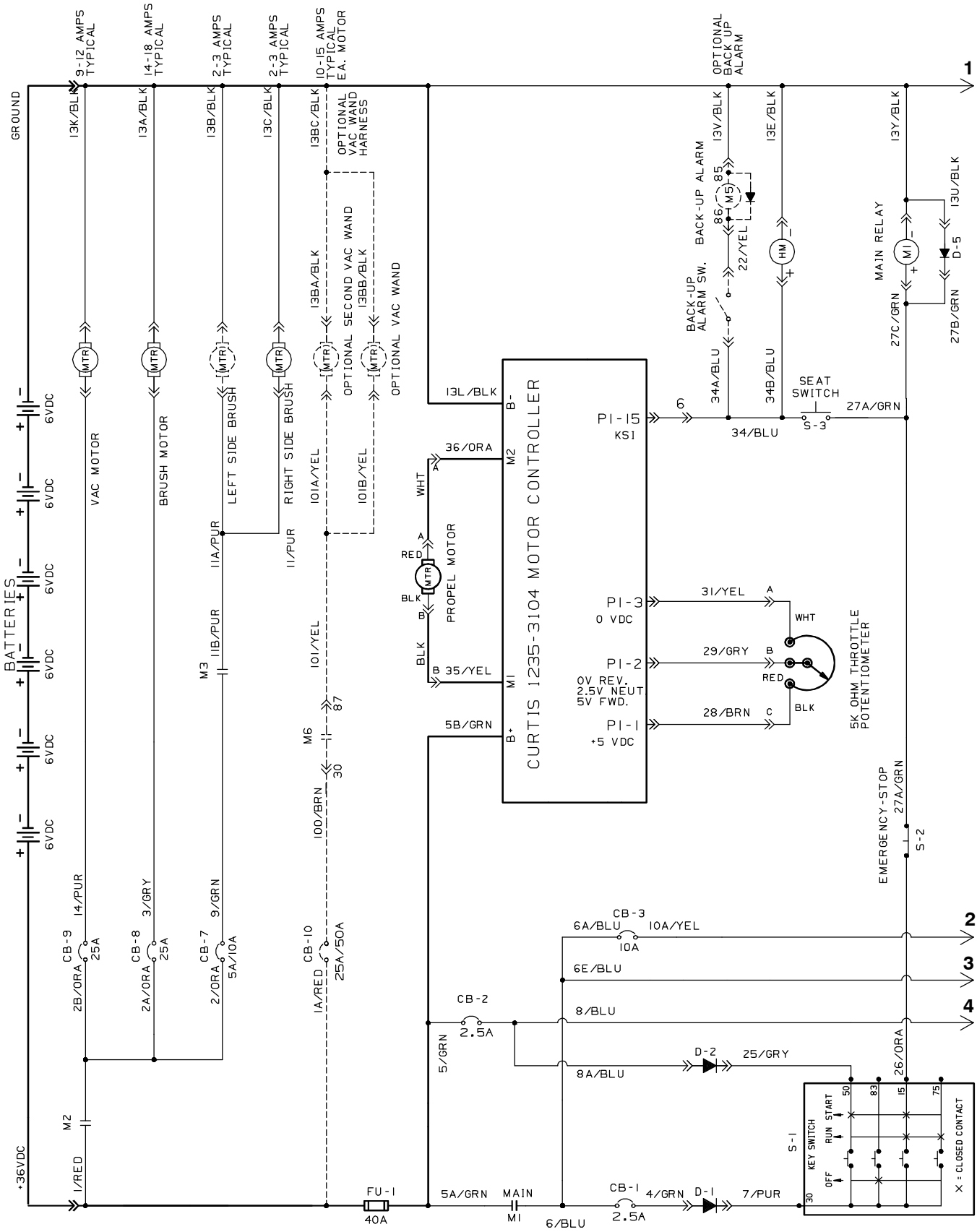

83025, 354368

Fig. 32 – Electrical Schematic (002015–005103)

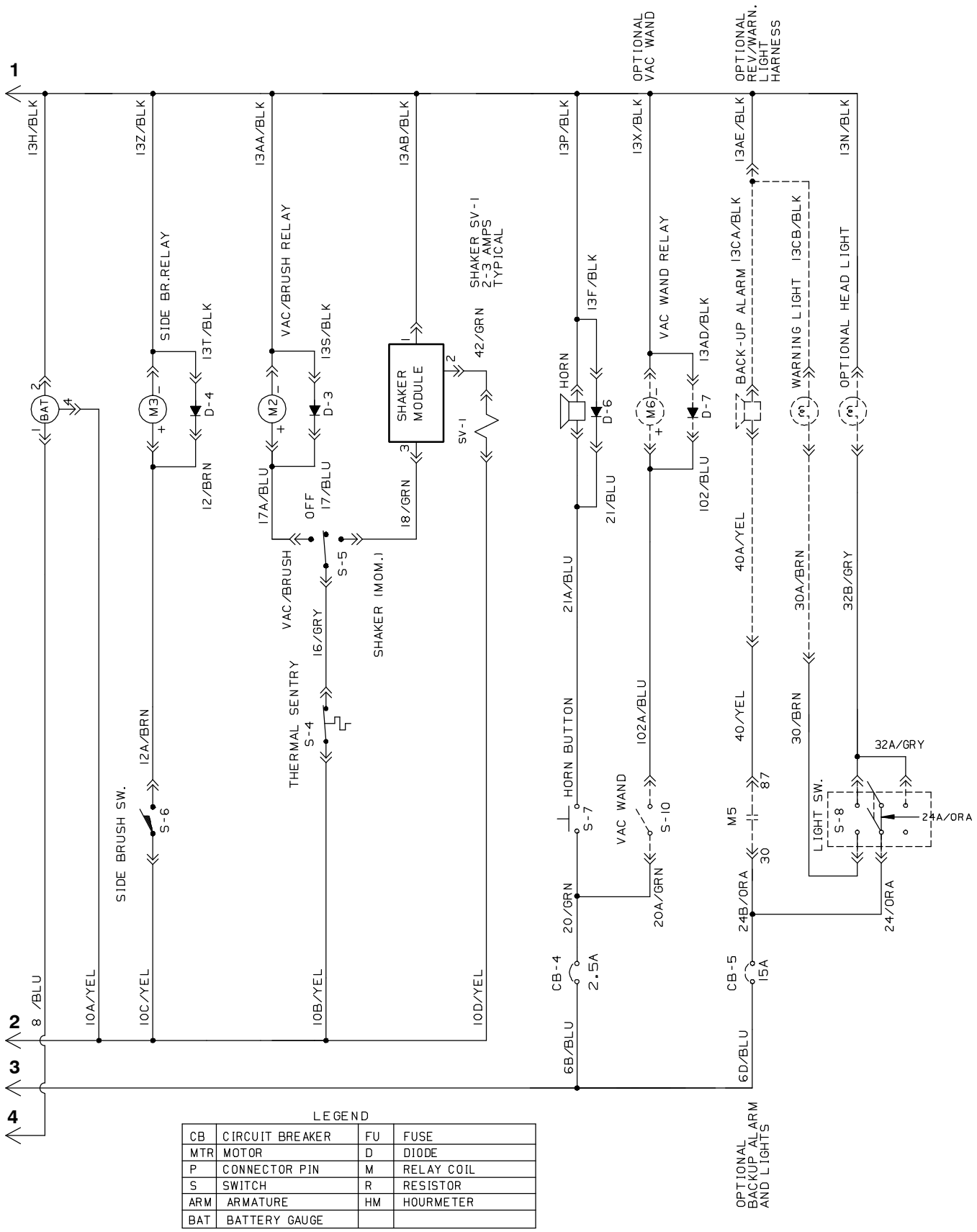

LEGEND

CB	CIRCUIT BREAKER	FU	FUSE
MTR	MOTOR	D	DIODE
P	CONNECTOR PIN	M	RELAY COIL
S	SWITCH	R	RESISTOR
ARM	ARMATURE	HM	HOURMETER
BAT	BATTERY GAUGE		

83025, 354368

Fig. 33 – Electrical Schematic (005104–)

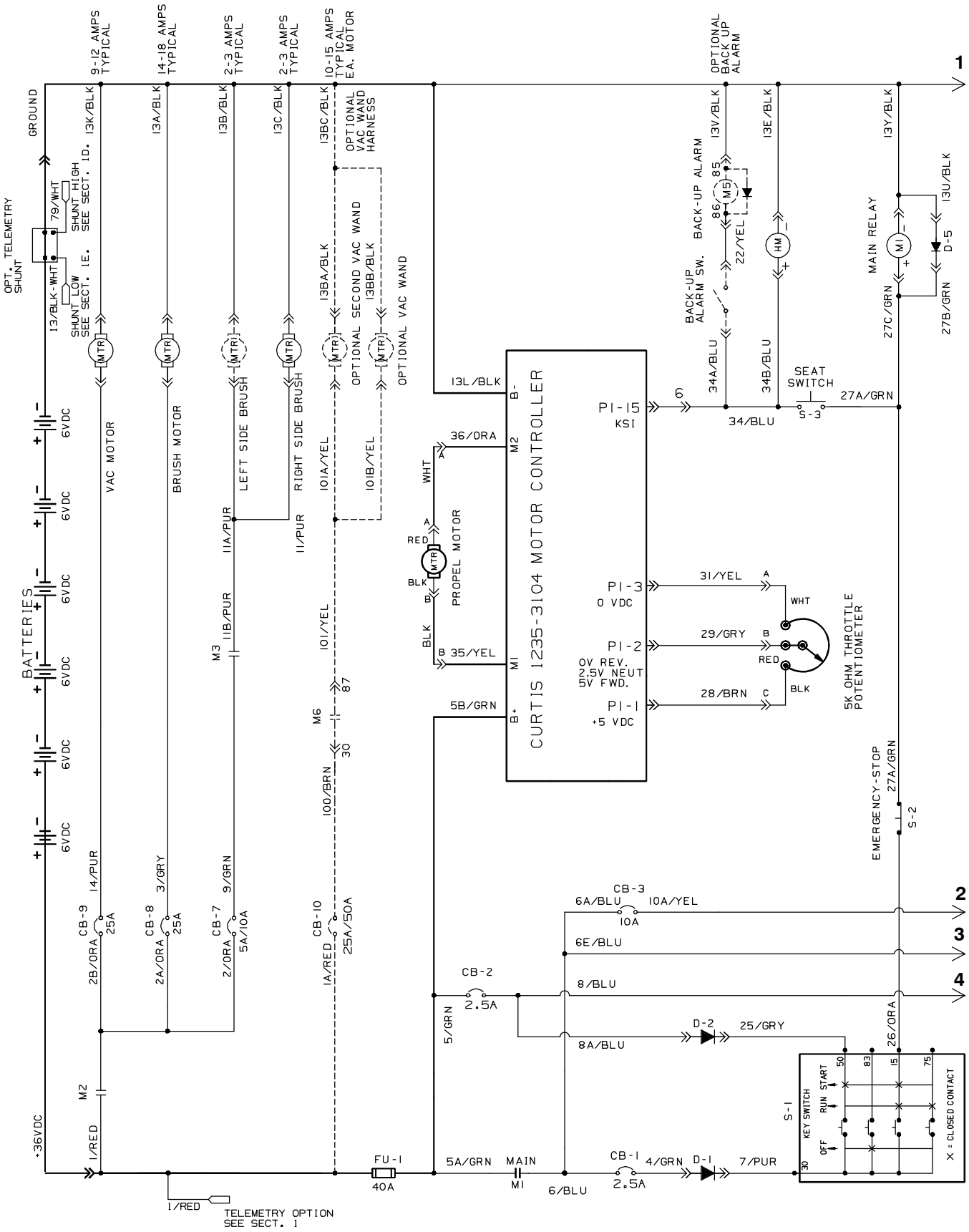

83025, 354368

Fig. 33 – Electrical Schematic (005104–)

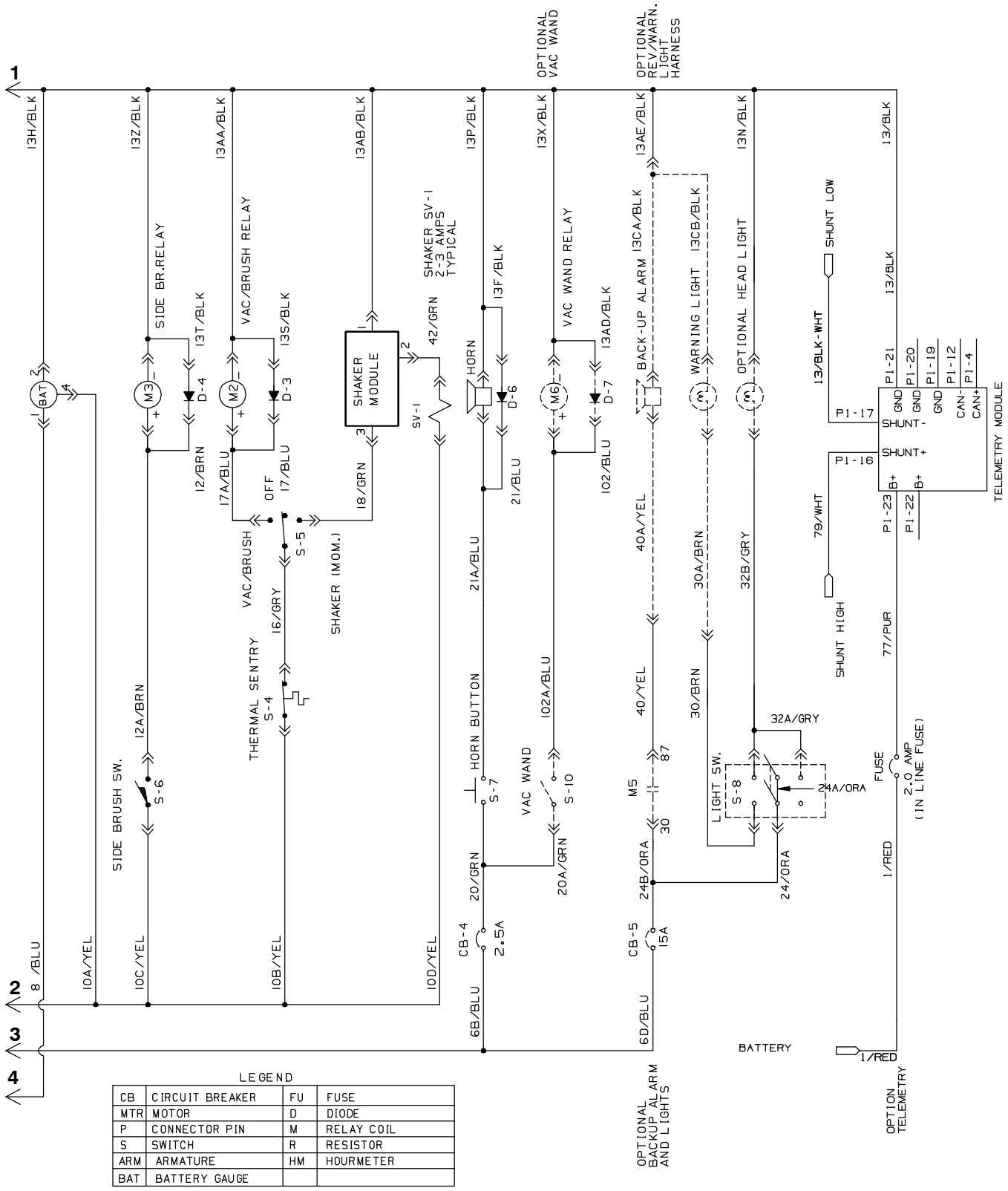

83025, 354368

Fig. 34 – Wire Harnesses Group

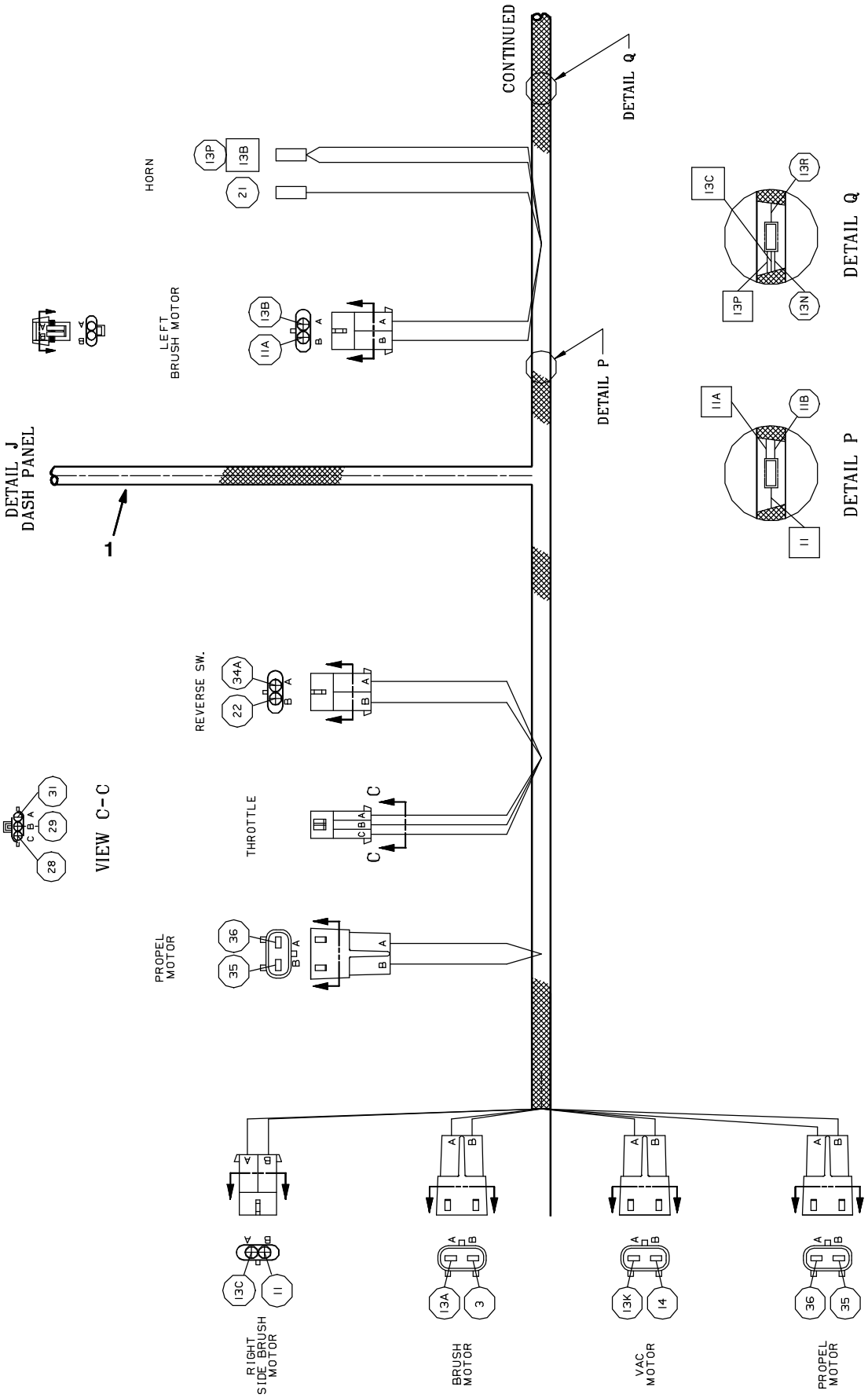

Fig. 34 – Wire Harnesses Group

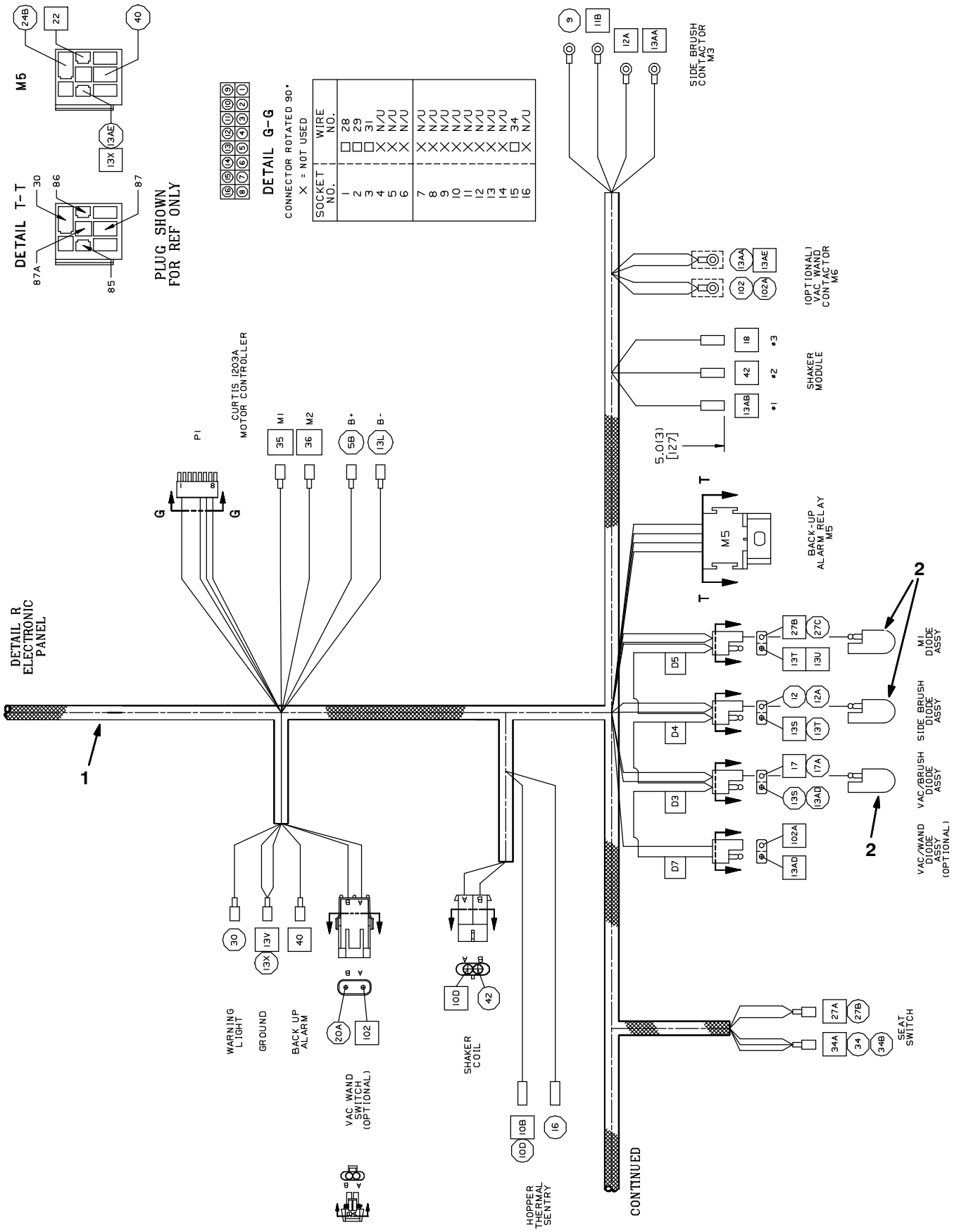

Fig. 34 – Wire Harnesses Group

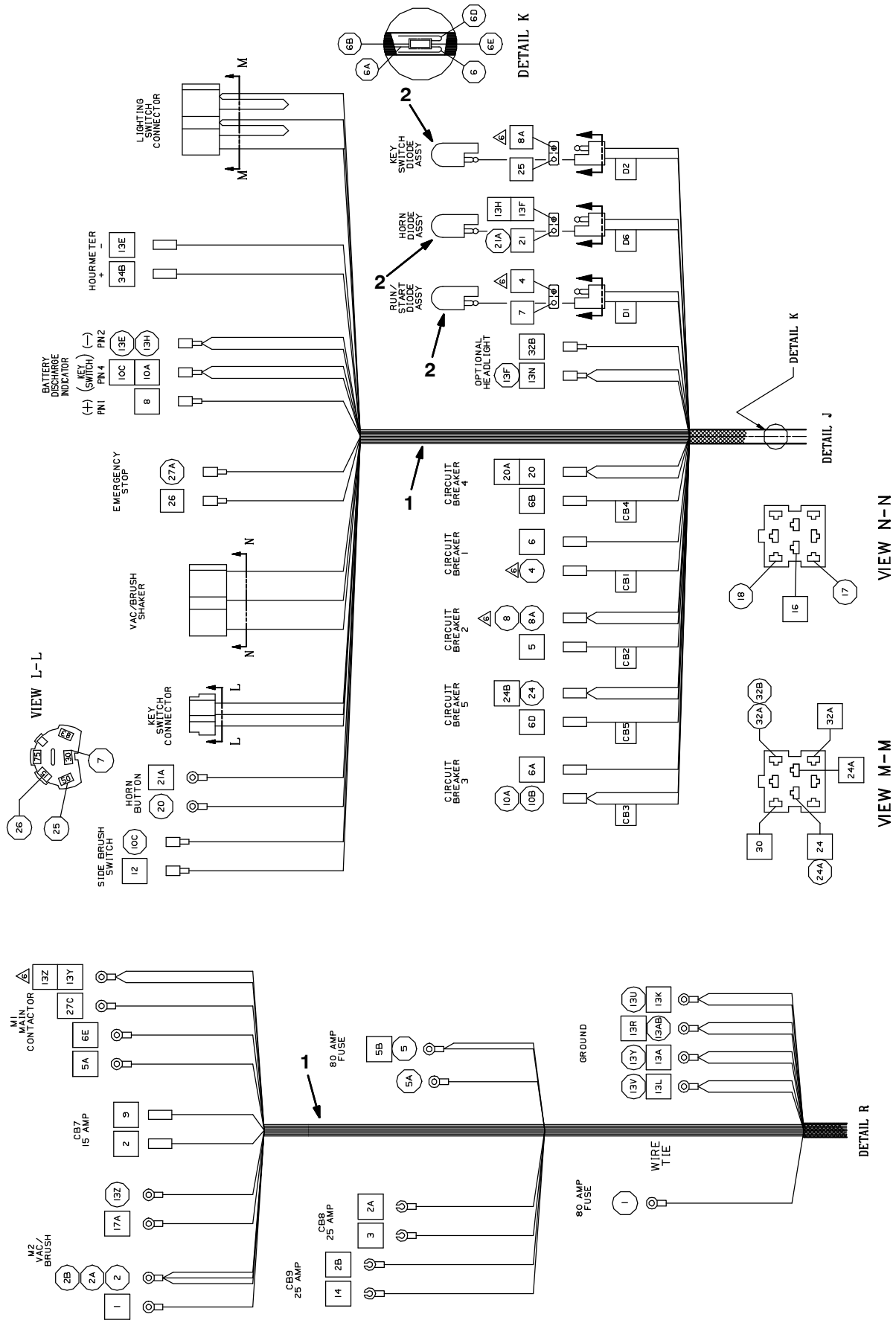

Fig. 34 – Wire Harnesses Group

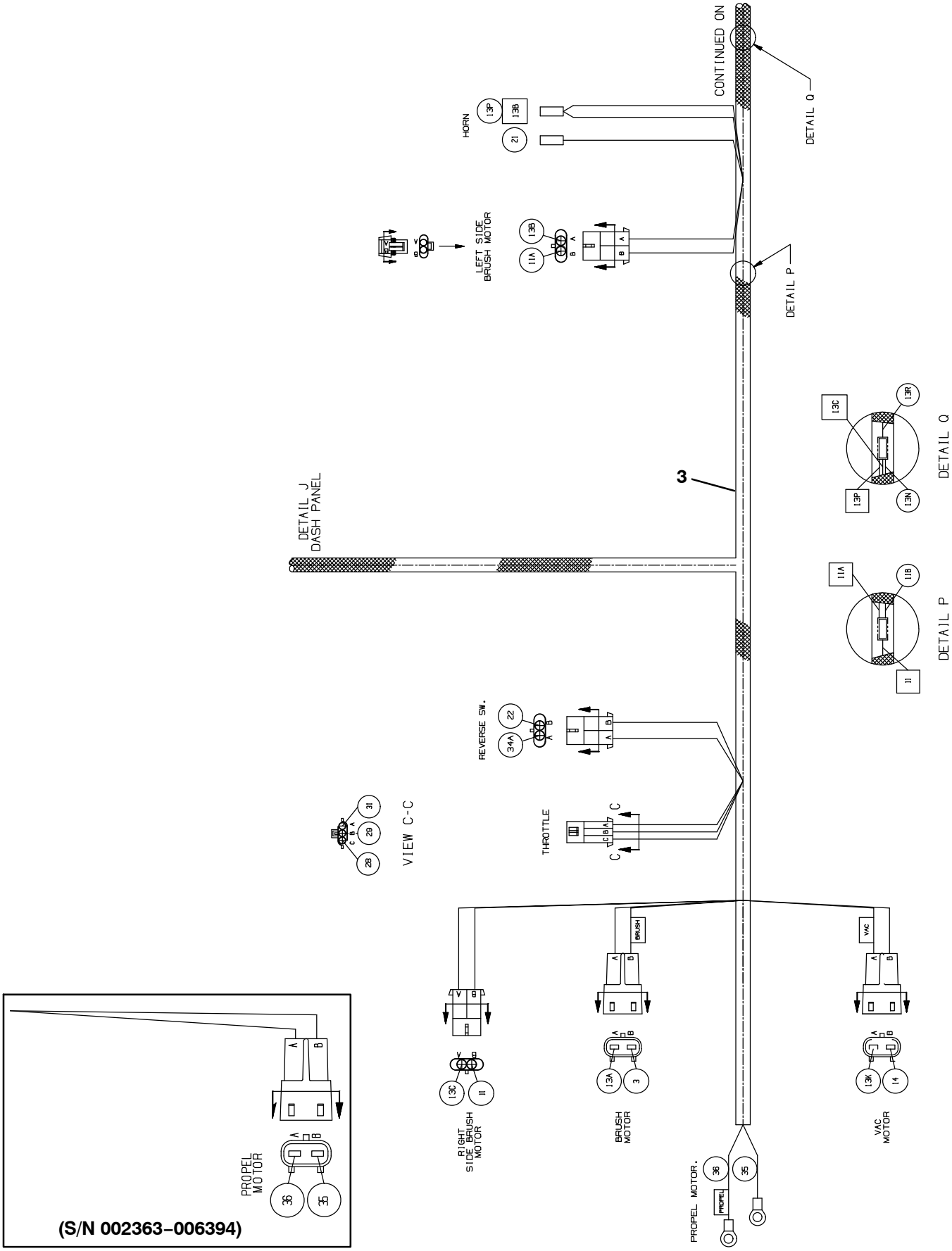

Fig. 34 – Wire Harnesses Group

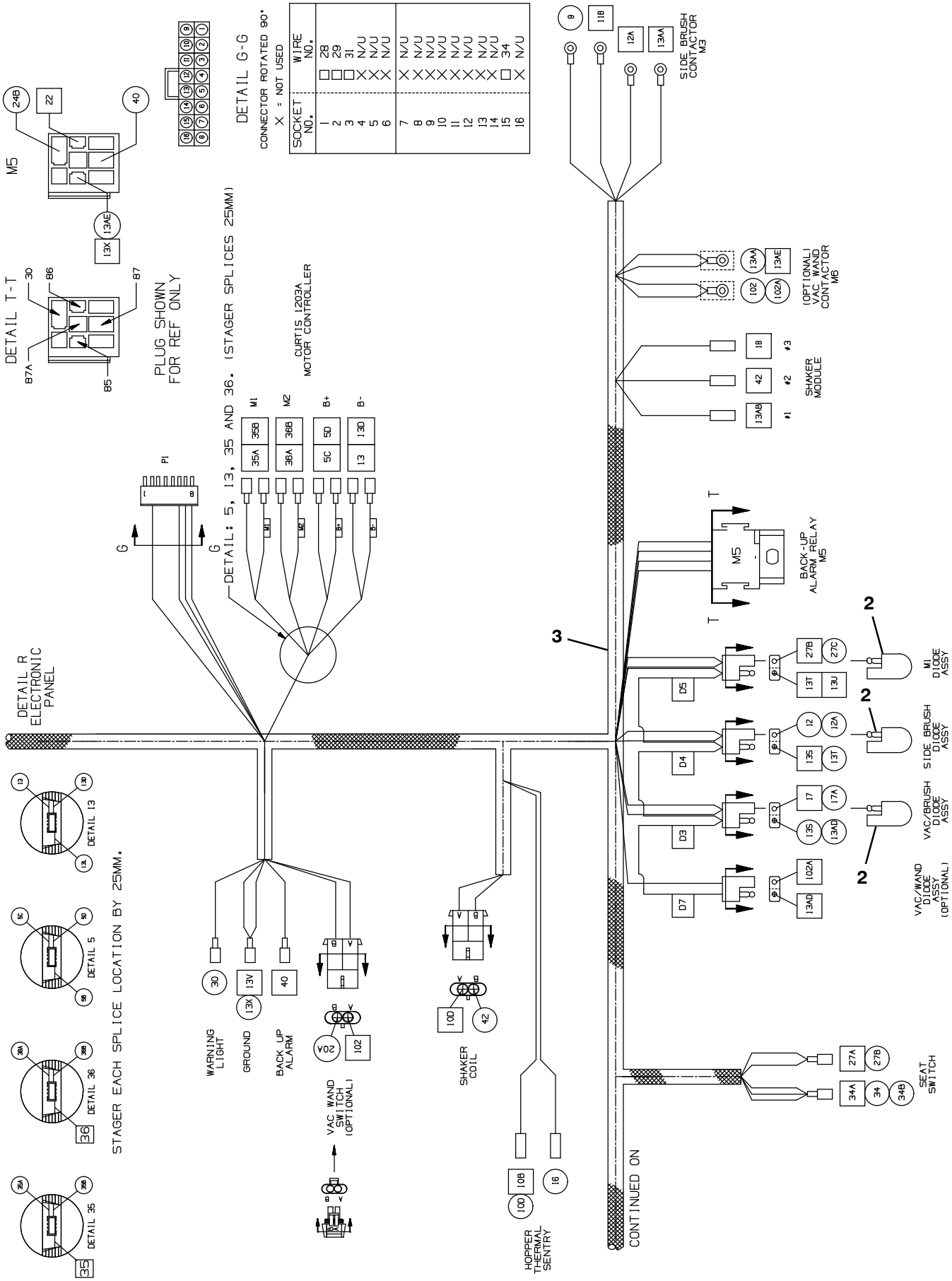

Fig. 34 – Wire Harnesses Group

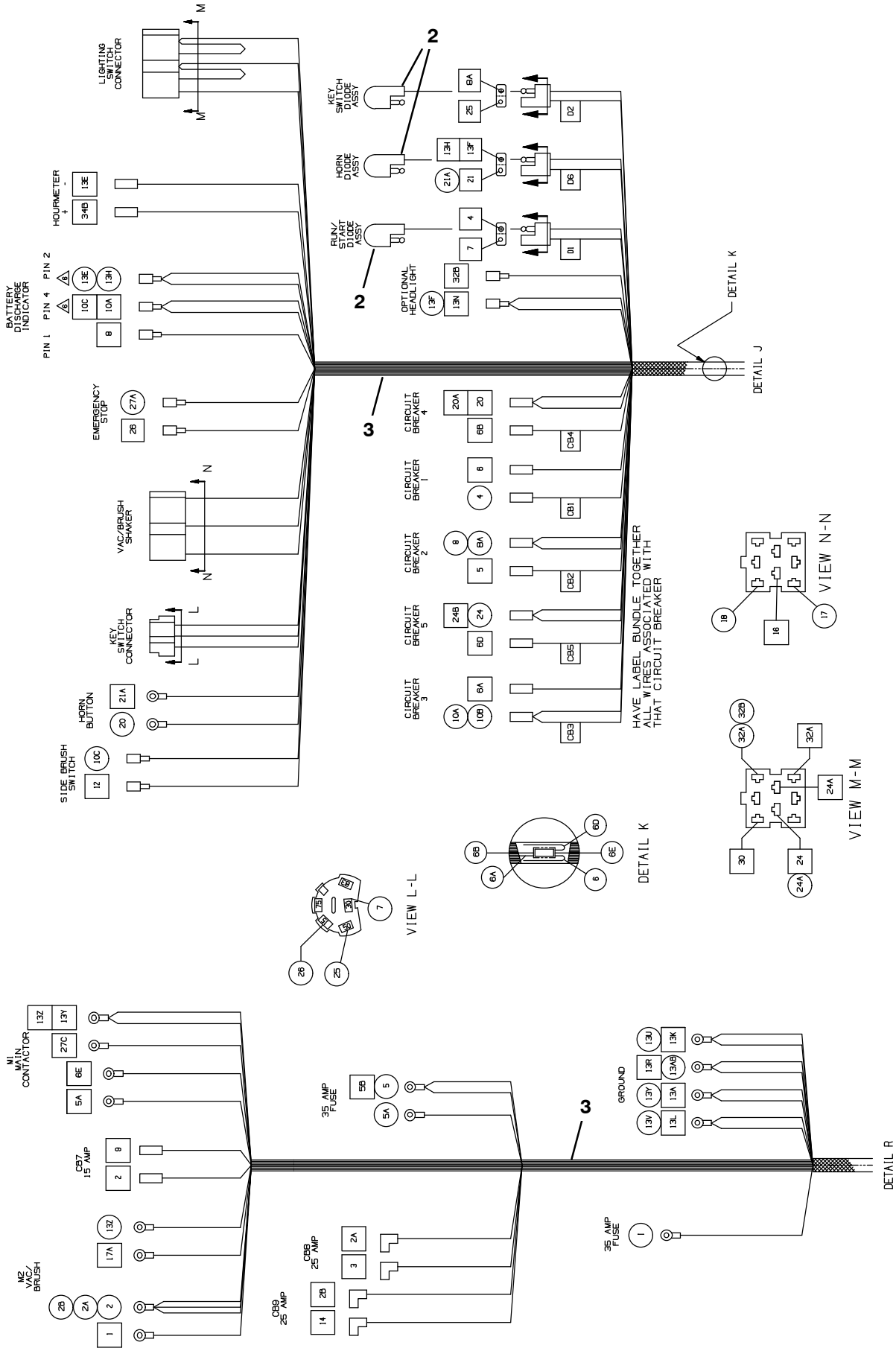

Fig. 34 – Wire Harnesses Group

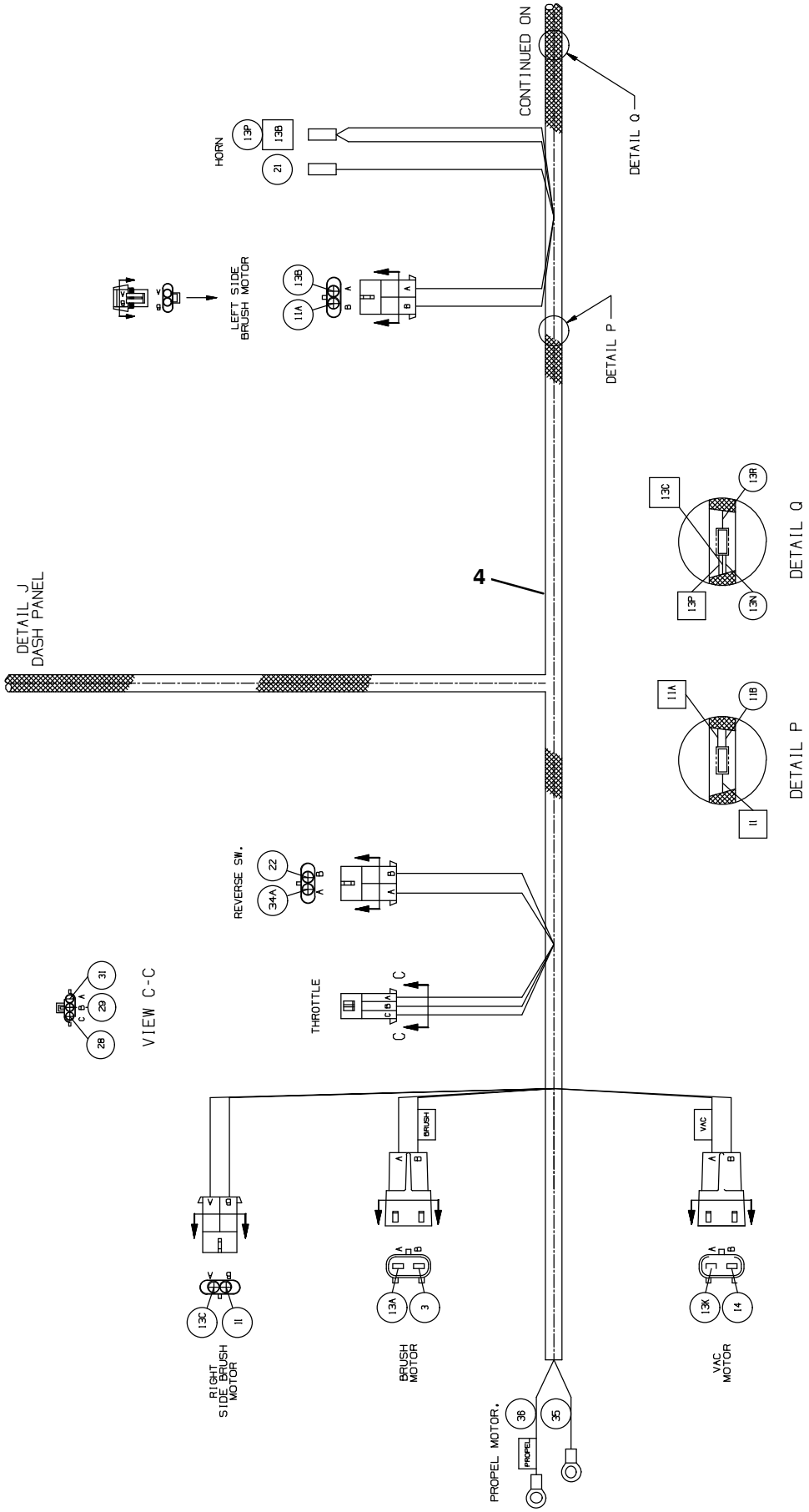

Fig. 34 – Wire Harnesses Group

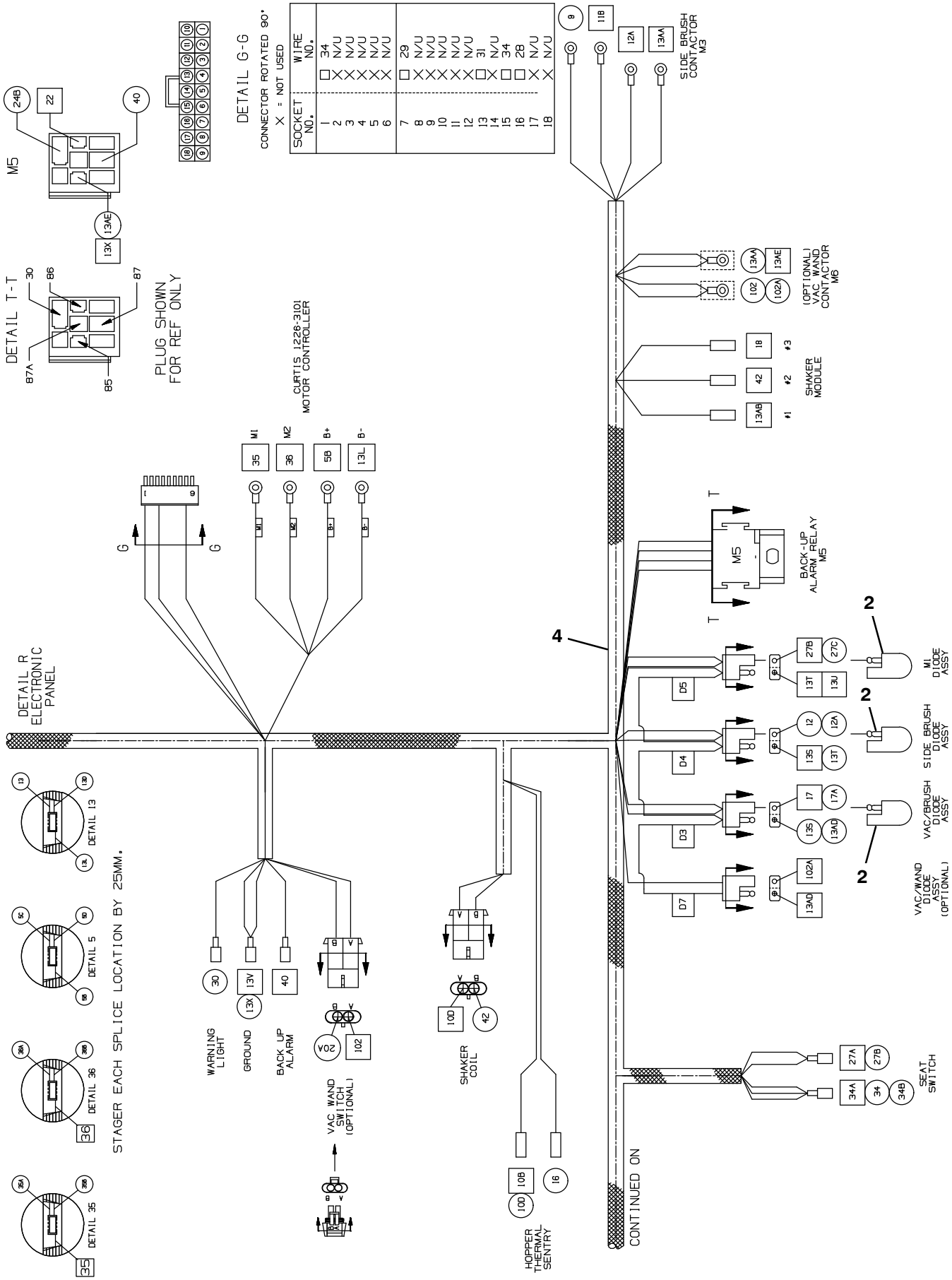

Fig. 34 – Wire Harnesses Group

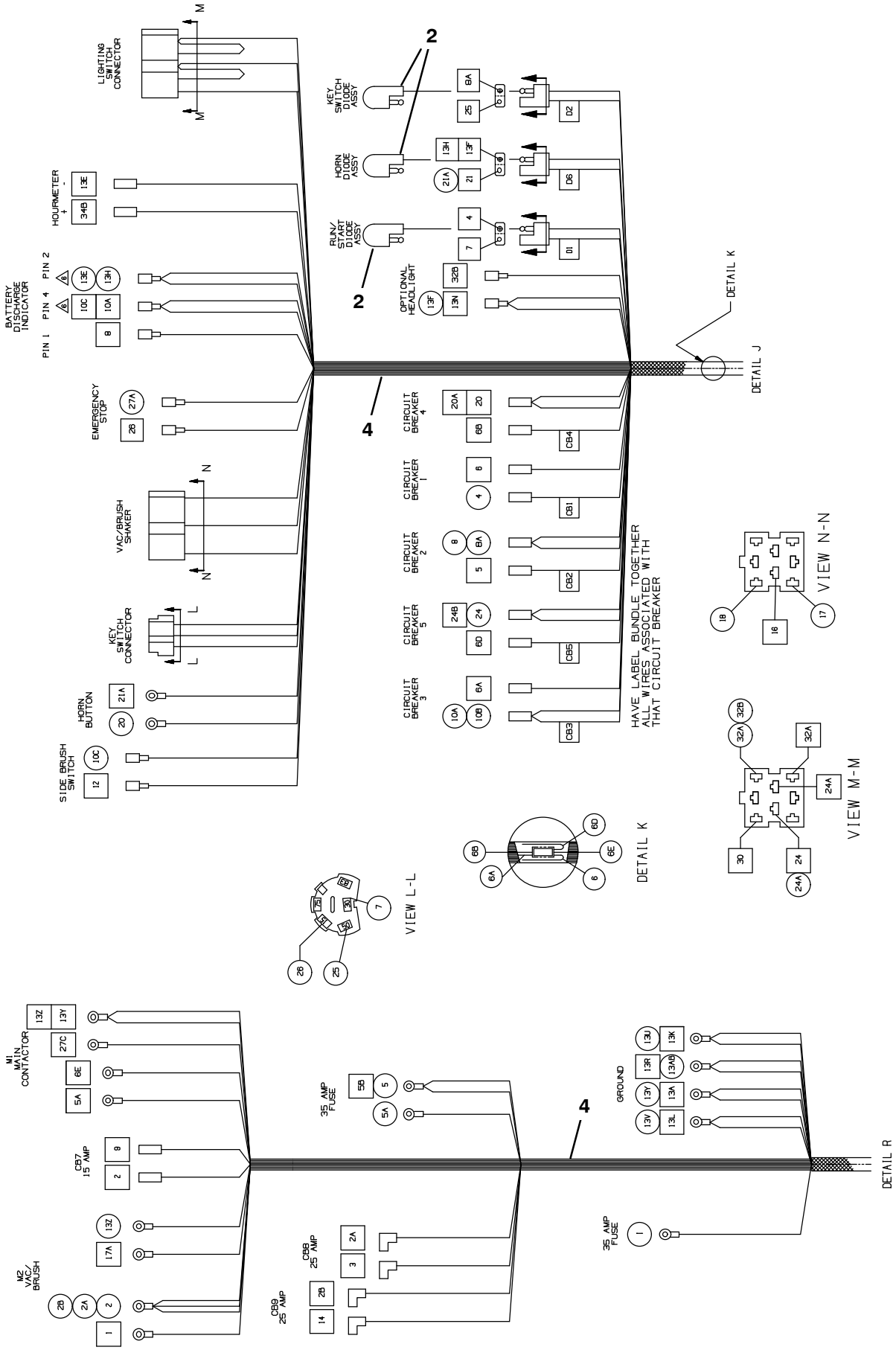

352161, 354598 – E

Fig. 34 – Wire Harnesses Group

Ref.	Part No.	Serial Number	Description	Qty.
1	81924	(000000–003717)	Harness, Wire, Main 6100 Std	1
2	222290	(000000–)	Diode, Electric Plug	6
3	1036873	(003718–007118)	Harness, Main [6100]	1
4	1076785	(007119–)	Harness, Main [6100]	1

Fig. 35 – Label Group

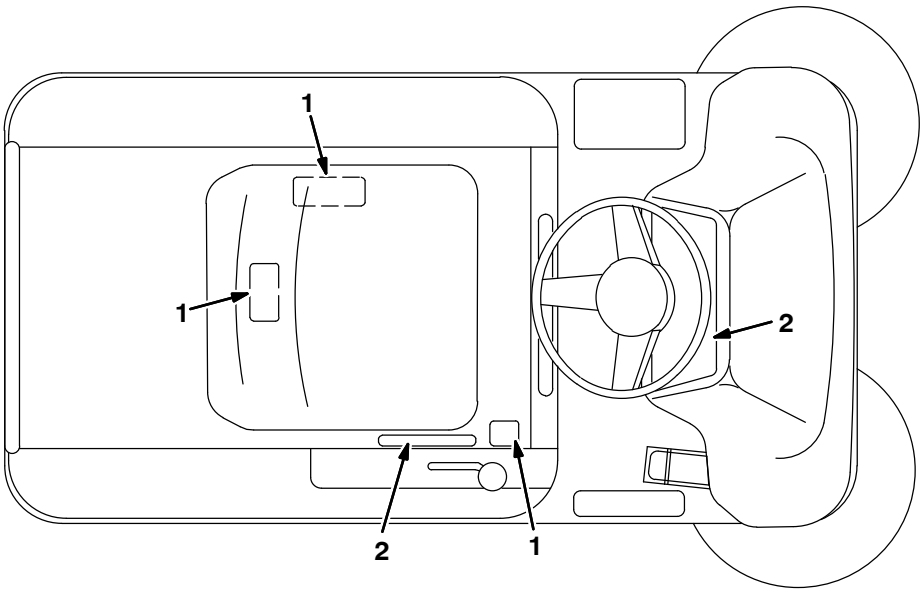

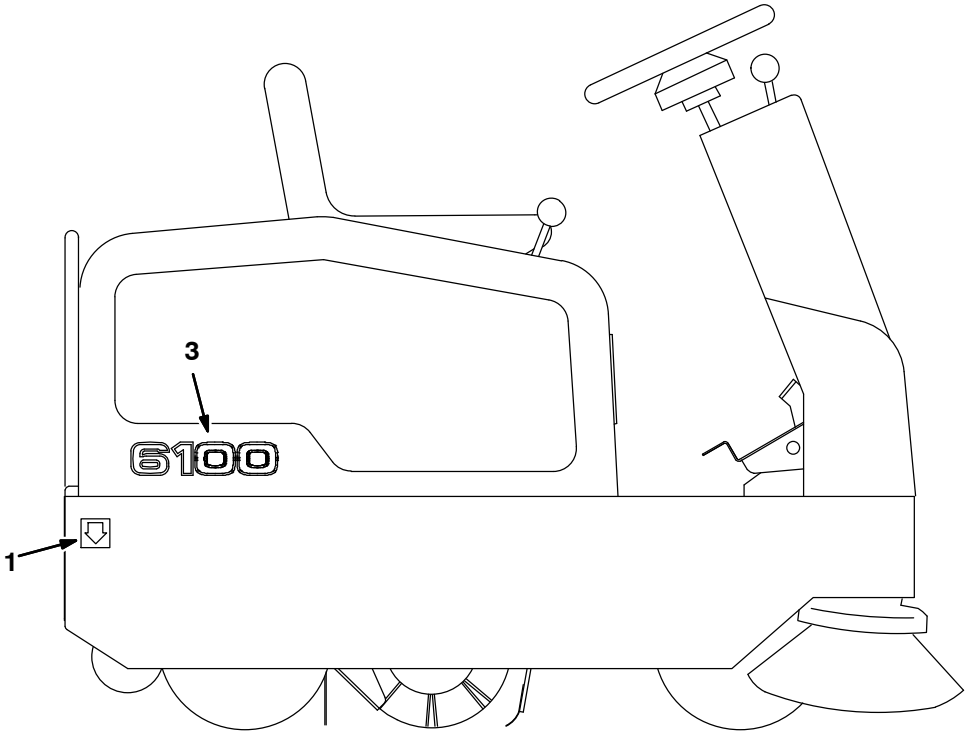

352201 – E

Ref.	Part No.	Serial Number	Description	Qty.
1	83520	(000000–)	Label Set,Info&Hzd 6100	1
1	384285	(000000–)	Label Set, Info/Hzrd, Tj [6200] (Japan Only)	1
2	83518	(000000–)	Label Set, Oper. 6100 Ev	1
3	1255208	(008001–)	Label, Logo [6100, Teal]	2
	374000	(000000–)	Label, Battery, Japan (Mounted on Battery)	6

SECTION 3

Contents **Page**

Fig. 1 – Quick Mop Kit (000000–008000) 3–2
Fig. 2 – Vacuum Wand Group 3–4
Fig. 3 – Vacuum Wand Box Group, Single Fan . 3–6
Fig. 4 – Vacuum Wand Electrical Group, Single Fan 3–8
Fig. 5 – Vacuum Wand Box Group, Dual Fan . 3–10
Fig. 6 – Vacuum Wand Electrical Group, Dual Fan 3–12
Fig. 7 – Side Brush Lift Group, Left Hand 3–14
Fig. 8 – Side Brush Lift Group, Right Hand (Japan Only) 3–16
Fig. 9 – Side Brush Motor Group, Left Hand . . 3–18
Fig. 10 – Side Brush Motor Group, Right Hand (Japan Only) 3–20
Fig. 11 – Rollout Battery Case Kit (000000–008000) 3–22
Fig. 12 – Rollout Battery Pack Kit (000000–008000) 3–24
Fig. 13 – Rollout Battery Cart Kit (000000–008000) 3–26
Fig. 14 – Flashing Light Kit 3–28
Fig. 15 – Backup Alarm Kit 3–30
Fig. 16 – Backup Alarm and Flashing Light Kit . 3–32
Fig. 17 – Battery Kit, Wet, 36Vdc 220AH 3–34
Fig. 18 – Hydrolink® Battery Watering System Kit 3–36
Fig. 19 – Seat Belt Kit 3–37
Fig. 20 – Seat Slide Kit 3–38
Fig. 21 – Battery Charger Group 3–39
Fig. 22 – Battery Charger Group (Japan Only) . 3–40
Fig. 23 – Side Molding Kit 3–41
Fig. 24 – Worklight Kit 3–42
Fig. 25 – Non–Marking Tire Kit (000000–002362)3–43
Fig. 26 – Non–Marking Tire Kit (002363–) 3–44
Fig. 27 – Fire Extinguisher Kit 3–45
Fig. 28 – Telemetry Group (005104–) . . . 3–46
Fig. 29 – Heavy Duty Controller Kit (000000–002014) 3–48
Fig. 30 – Electrical Schematic, Heavy Duty Controller 3–49
Fig. 31 – Documentation Group (Online Only) . 3–51

Fig. 1 – Quick Mop Kit (000000–008000)

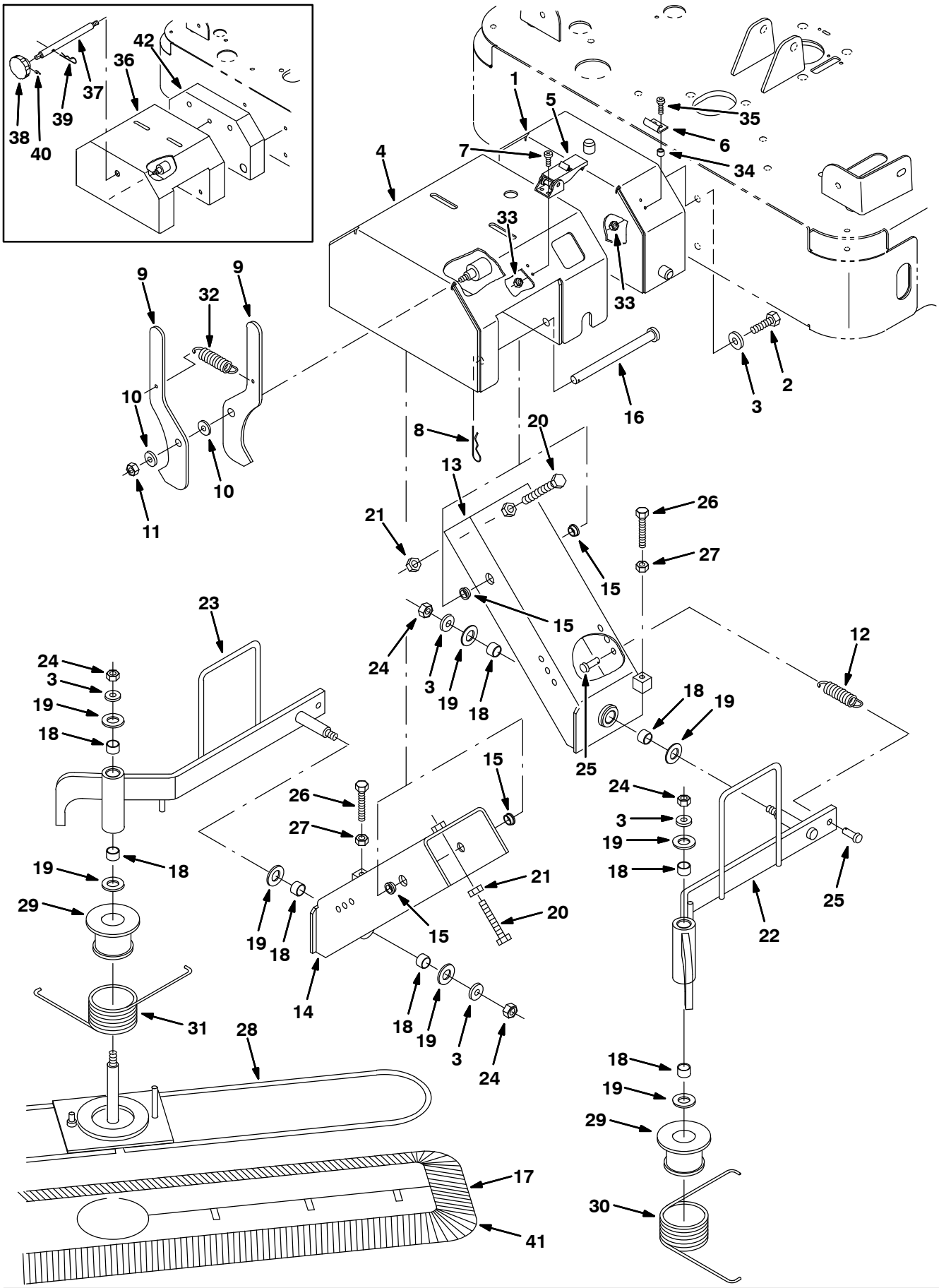

352180 – ALL

Fig. 1 – Quick Mop Kit (000000–008000)

	Ref.	Part No.	Serial Number	Description	Qty.
▽		83199	(000000–008000)	Quick Mop Kit, 6100	1
▲	1	384246	(xxxxxx–008000)	Bumper Wldt, V–Mop	1
▲	2	39283	(000000–008000)	Screw, Hex, M10–1.5 X 25, 8.8	4
▲	3	32492	(000000–008000)	Washer, Flat, .38 Hard	8
▲	4	384247	(xxxxxx–008000)	Housing Wldt, V–Mop	1
▲	5	384418	(xxxxxx–008000)	Latch, Door	2
▲	6	384419	(xxxxxx–008000)	Bracket, Keeper	2
▲	7	49697	(xxxxxx–008000)	Screw, Pan, M04–0.7 X 10, Ss	4
▲	8	02942	(000000–008000)	Pin, Hair Cotter	2
▲	9	83338	(000000–008000)	Plate, Latch	2
▲	10	86860	(000000–008000)	Bearing, Thrust 0.50B 0.87D 0.06W	2
▲	11	08709	(000000–008000)	Nut, Hex, Lock, M08–1.25,Nl	1
▲	12	15047	(000000–008000)	Spring, Extension	2
▲	13	83313	(000000–008000)	Channel Wldt, Lift Lh	1
▲	14	83315	(000000–008000)	Channel Wldt, Lift Rh	1
▲	15	15648	(000000–008000)	Bearing, Flange	4
▲	16	51225–1	(000000–008000)	Pin, Clevis	2
▲	17	83347	(000000–008000)	Mop, Dust	2
▲	18	07449	(000000–008000)	Bearing, Fiberglide	8
▲	19	64425	(000000–008000)	Washer	8
▲	20	76438	(000000–008000)	Screw, Hex, M10–1.5 X 90, Fl	2
▲	21	39312	(000000–008000)	Nut, Hex, Std, M10–1.5	2
▲	22	83318	(000000–008000)	Arm Wldt, Lift Lh	1
▲	23	83324	(000000–008000)	Arm Wldt, Lift Rh	1
▲	24	41430	(000000–008000)	Nut, Hex, Lock, M10–1.5, Nl	4
▲	25	39019	(000000–008000)	Pin, Clevis	4
▲	26	363976	(000000–008000)	Scr–Hex M 8X1.25 60 Full Thd	2
▲	27	39311	(000000–008000)	Nut, Hex, Std, M08–1.25	2
▲	28	83325	(000000–008000)	Frame Wldt, V–Mop	2
▲	29	83332	(000000–008000)	Spacer, Spring	2
▲	30	80317	(000000–008000)	Spring, Torsion	1
▲	31	80318	(000000–008000)	Spring, Torsion	1
▲	32	87816	(000000–008000)	Spring, Extension	1
▲	33	02850	(xxxxxx–008000)	Nut, Hex, Lock, M04–0.7, Nl	8
▲	34	65441	(xxxxxx–008000)	Spacer	4
▲	35	12323	(xxxxxx–008000)	Screw, Pan, M04 X 0.7 X 20, Ss	4
	36	83335	(000000– xxxxxx)	Housing Wldt, V–Mop	1
	37	83341	(000000– xxxxxx)	Rod, Threaded (Obsolete, Replaced by None)	1
	38	06506	(000000– xxxxxx)	Knob	1
	39	02942	(000000– xxxxxx)	Pin, Hair Cotter	1
	40	39323	(000000– xxxxxx)	Screw, Set, #10–32 X 0.38,	1
	41	83348	(000000–008000)	Mop, Dust, Industrial	1
	42	83342	(000000– xxxxxx)	Bumper Wldt, V–Mop	1

Fig. 2 – Vacuum Wand Group

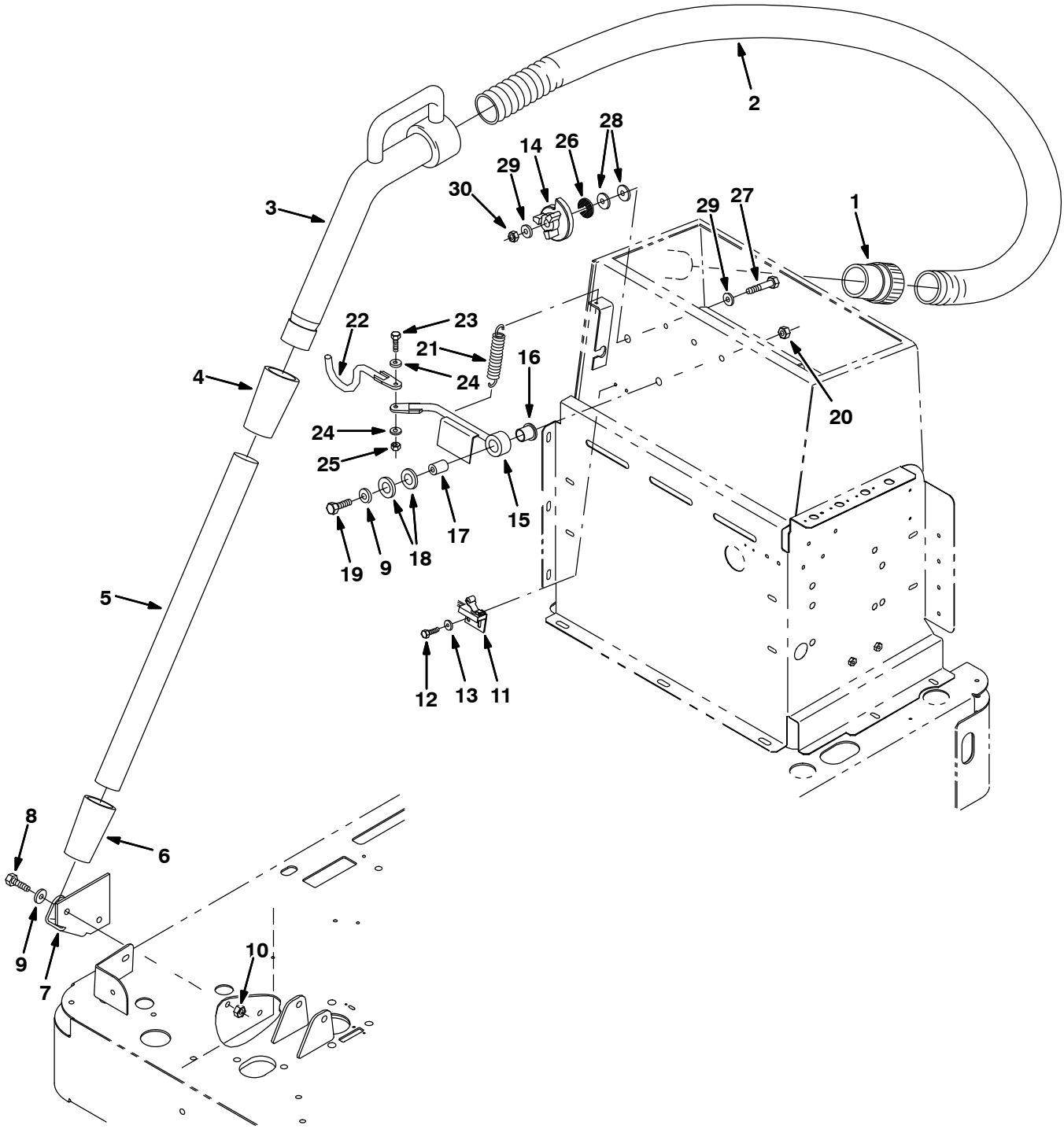

352167 – E

Fig. 2 – Vacuum Wand Group

NOTE: Single Vacuum Fan Kit, Tennant Part Number 83231, includes Fig. 2, Fig. 3, and Fig. 4.
NOTE: Dual Vacuum Fan Kit, Tennant Part Number 83437, includes Fig. 2, Fig. 5, and Fig. 6.

Ref.	Part No.	Serial Number	Description	Qty.
1	83285	(000000–)	Cuff, Hose	1
2	83289	(000000–)	Hose, Flex	1
3	83286	(000000–)	Nozzle, Vac Wand	1
4	83287	(000000–)	Coupling, Vac Wand	1
5	83288	(000000–)	Tube, Vac Wand	1
6	80299	(000000–)	Coupling, Vac–Wand	1
7	83296	(000000–)	Brkt, Frame	1
8	39283	(000000–)	Screw, Hex, M10–1.5 X 25, 8.8	2
9	32492	(000000–)	Washer, Flat, .38 Hard	3
10	07792	(000000–)	Nut, Hex, Flange, M10–1.5	2
11	59962	(000000–)	Switch, Roller	1
12	09244	(000000–)	Screw, Hex, M05–0.8 X 16, 8.8	2
13	19066	(000000–)	Washer, Flat, #10	2
14	222244	(000000–)	Cam, Squeegee	1
15	83298	(000000–008000)	Rod Wldt, Vac Wand	1
15	1077024	(008001–)	Rod, Handle [Gray]	1
16	72763	(000000–)	Bearing, Flange	1
17	73370	(000000–)	Sleeve	1
18	04846	(000000–)	Washer, Thrust	2
19	06962	(000000–)	Screw, Hex, M10–1.5 X 45, 8.8	1
20	41430	(000000–)	Nut, Hex, Lock, M10–1.5, Nl	1
21	25737	(000000–)	Spring, Tension	1
22	83309	(000000–008000)	Rod Wldt, Vac Wand	1
22	1077025	(008001–)	Rod Wldt, Vac Wand [Gray]	1
23	06943	(000000–)	Screw, Hex, M06–1.0 X 20, 8.8	1
24	32490	(000000–)	Washer, Flat, .25 Hard	2
25	08708	(000000–)	Nut, Hex, Lock, M06–1.0, Nl	1
26	222268	(000000–)	Washer, Neoprene	1
27	39278	(000000–)	Screw, Hex, M08–1.25 X 50, 8.8	1
28	64153	(000000–)	Washer	2
29	32491	(000000–)	Washer, Flat, .31 Hard	2
30	08709	(000000–)	Nut, Hex, Lock, M08–1.25,Nl	1

Fig. 3 – Vacuum Wand Box Group, Single Fan

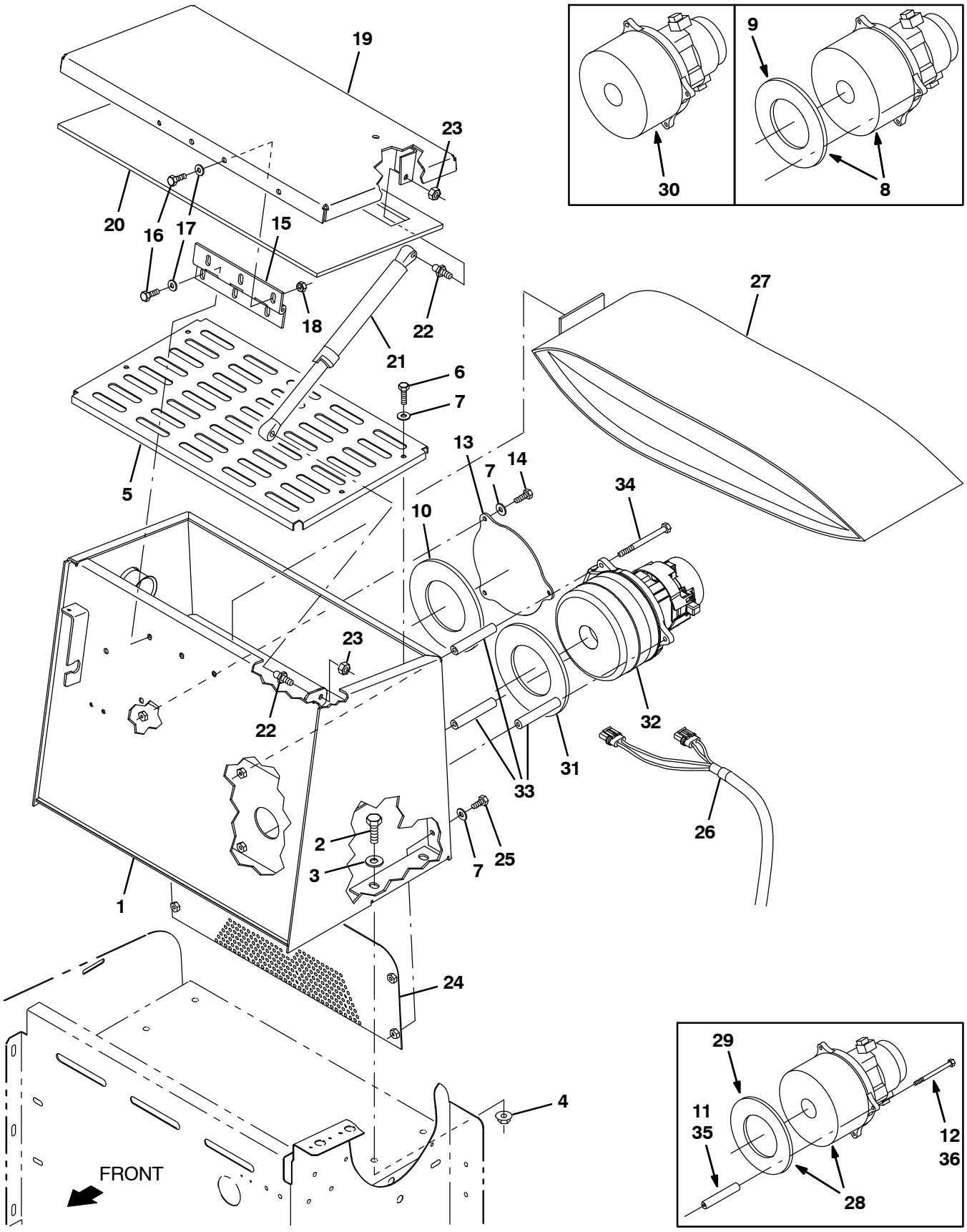

352165 – E

Fig. 3 – Vacuum Wand Box Group, Single Fan

NOTE: Single Vacuum Fan Kit, Tennant Part Number 83231, includes Fig. 2, Fig. 3, and Fig. 4.

	Ref.	Part No.	Serial Number	Description	Qty.
	1	83268	(000000–008000)	Box Assy, Vac Wand	1
	1	9021614	(008001–)	Box Assy, Vac Wand [Gray]	1
	2	39283	(000000–)	Screw, Hex, M10–1.5 X 25, 8.8	4
	3	32492	(000000–)	Washer, Flat, .38 Hard	4
	4	07791	(000000–)	Nut, Hex, Flange, M08–1.25	4
	5	83273	(000000–008000)	Screen, Vac Wand	1
	5	1077021	(008001–)	Panel, Screen, Vac Wand [Gray	1
	6	06945	(000000–)	Screw, Hex, M06–1.0 X 30, 8.8	4
	7	32490	(000000–)	Washer, Flat, .25 Hard	11
▽	8	17363	(000000– xxxxxx)	Fan Assy, Vacuum (See Breakdowns)	1
▲	9	223264	(000000– xxxxxx)	Seal, Vac Fan	1
	10	223264	(000000–003902)	Seal, Vac Fan	1
	10	10912	(003903–)	Seal, Rbr, Clsd, 0.375, 5.0d 2.5h	1
	11	18811	(000000–003902)	Tube, Steel .26X.50X3.16L	3
	12	09773	(000000–003902)	Screw, Hex, M06–1.0 X 100, Ss	3
	13	83277	(000000–008000)	Plate, Cover	1
	13	1077022	(008001–)	Plate, Cover, Hole, Vacfan [Gray]	1
	14	06943	(000000–)	Screw, Hex, M06–1.0 X 20, 8.8	3
	15	86430	(000000–)	Hinge	1
	16	87308	(000000–)	Screw, Hex, M06–1.00 X 12	6
	17	32483	(000000–)	Washer, Flat, .25 Hard	6
	18	07790	(000000–)	Nut, Hex, Flange M06–1.00	3
	19	83279	(000000–008000)	Door Wldt, Vac Wand	1
	19	1077023	(008001–)	Door Wldt, Box, Vac Wand [Gray]	1
	20	83282	(000000–)	Gasket, Door	1
	21	83278	(000000–)	Spring, Gas	1
	22	58494	(000000–)	Stud, Ball, Gas Spring	2
	23	87435	(000000–)	Nut, Hex, Flexlock, .31–18	2
	24	385663	(000000–008000)	Screen, Vac Wand	1
	24	1077029	(008001–)	Screen Wldt, Vac Wand [Gray]	1
	25	06942	(000000–)	Screw, Hex, M06–1.0 X 16, 8.8	4
	26	1036252	(000000–)	Harness, Wire, Vac Wand	1
	27	1067452	(000000–)	Bag, Vacuum, Paper [1pick=1pkg of 10bag]	1
▽	28	398520	(xxxxxx–003902)	Fan Assy, Vacuum (See Breakdowns) (Replaced by 9004054)	1
▲	29	223264	(xxxxxx–003902)	Seal, Vac Fan	1
▽	30	1039617	(003903–004361)	Fan, Vacuum, 5.7d, 036vdc, 3 Stage	1
▲		1041772	(003903–004361)	Brush Kit, Motor	1
▲		1041766	(003903–004361)	Cover, Cooling Fan	1
	31	10912	(003903–)	Seal, Rbr, Clsd, 0.375, 5.0d 2.5h	1
	32	9017657	(004362–006624)	Kit, Fan, Vac Fan Offset	1
	32	1076096	(006625–)	Fan, Vacuum, 5.7d, 036vdc, 3 Stage [Pkrd]	1
	33	1076122	(006625–)	Tube, 0.25id 0.52od 03.2l, Stl	3
	34	09773	(006625–)	Screw, Hex, M6 X 1.00 X 100mm, Ss	3
	35	1042580	(003903–006624)	Tube, 0.25id 0.52od 03.4l, Stl	3
	36	1043003	(003903–006624)	Screw, Hex, M6 X 1.00 X 110mm, Ss	3

Fig. 4 – Vacuum Wand Electrical Group, Single Fan

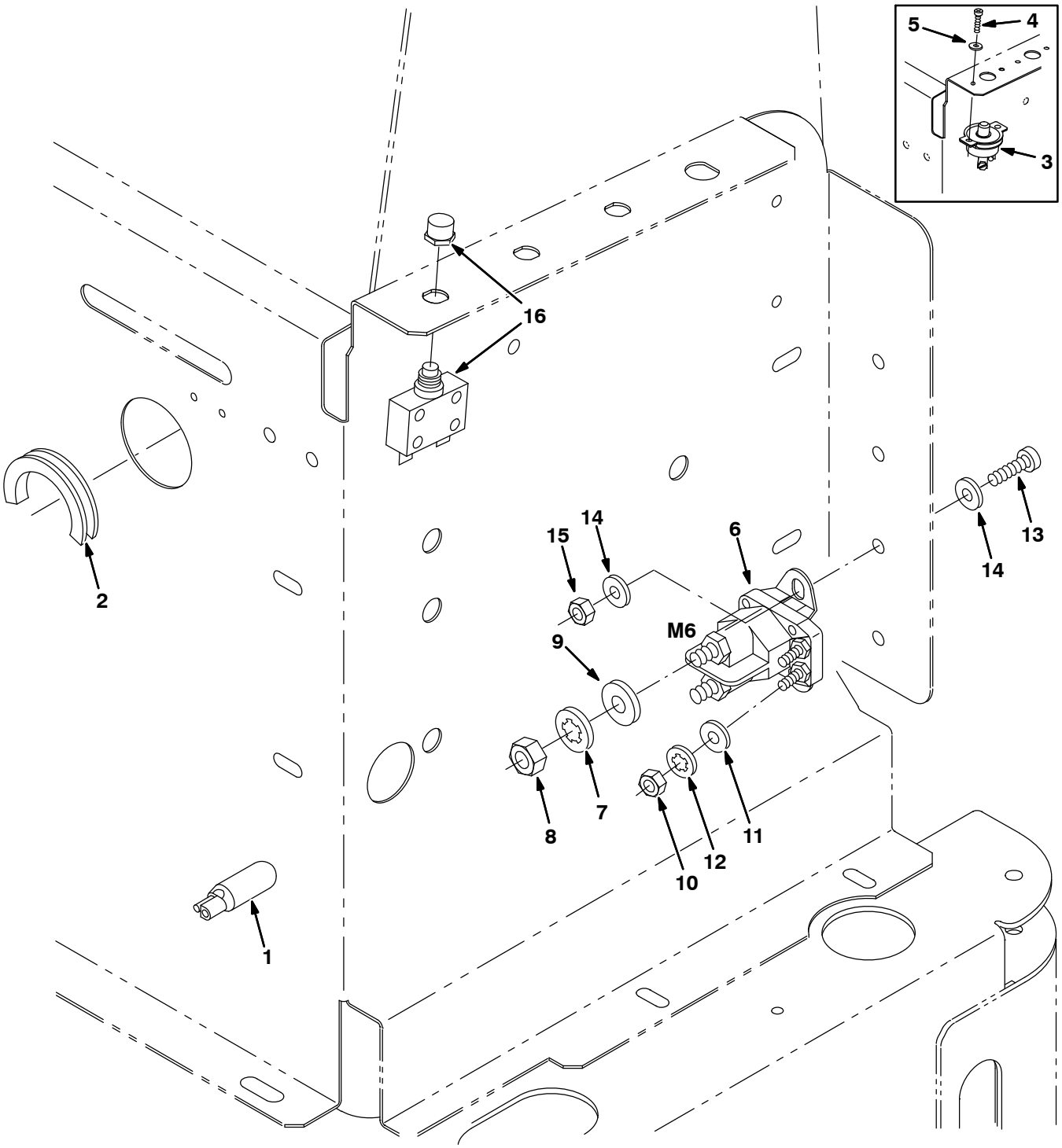

352171 – E

Fig. 4 – Vacuum Wand Electrical Group, Single Fan

NOTE: Single Vacuum Fan Kit, Tennant Part Number 83231, includes Fig. 2, Fig. 3, and Fig. 4.

Ref.	Part No.	Serial Number	Description	Qty.
1	222290	(000000–)	Diode, Electric Plug	1
2	47080	(000000–)	Grommet, Rubber	1
3	9003353	(000000–003717)	Circuitbreaker Kit, 20a, Replmt, Ci	1
4	25006	(000000–003717)	Screw, Pan, #08–32 X 0.88, G1	2
5	19065	(000000–003717)	Washer, Flat, #08	2
6	386810	(000000–)	Contactor, 36vdc, 100a, Sp N/O	1
7	32984	(000000–)	Washer, Lock, Int, .31	2
8	20170	(000000–)	Nut, Hex, Jam, .31–24	2
9	39349	(000000–)	Washer, Flat, .31 Sae	2
10	01713	(000000–)	Nut, Hex, Std, #10–32, G2	2
11	19324	(000000–)	Washer, Flat, #10 Sae	2
12	32980	(000000–)	Washer, Lock, Int, #10	2
13	06933	(000000–)	Screw, Pan, M05–0.8 X 16, 4.8	1
14	19066	(000000–)	Washer, Flat, #10	2
15	06549	(000000–)	Nut, Hex, Lock, M05–0.8, Nl	1
16	383723	(003718–003902)	Circuitbreaker, 20.0a, Resetable	1
16	383724	(003903–)	Circuitbreaker, 25.0a, Resetable	1

Fig. 5 – Vacuum Wand Box Group, Dual Fan

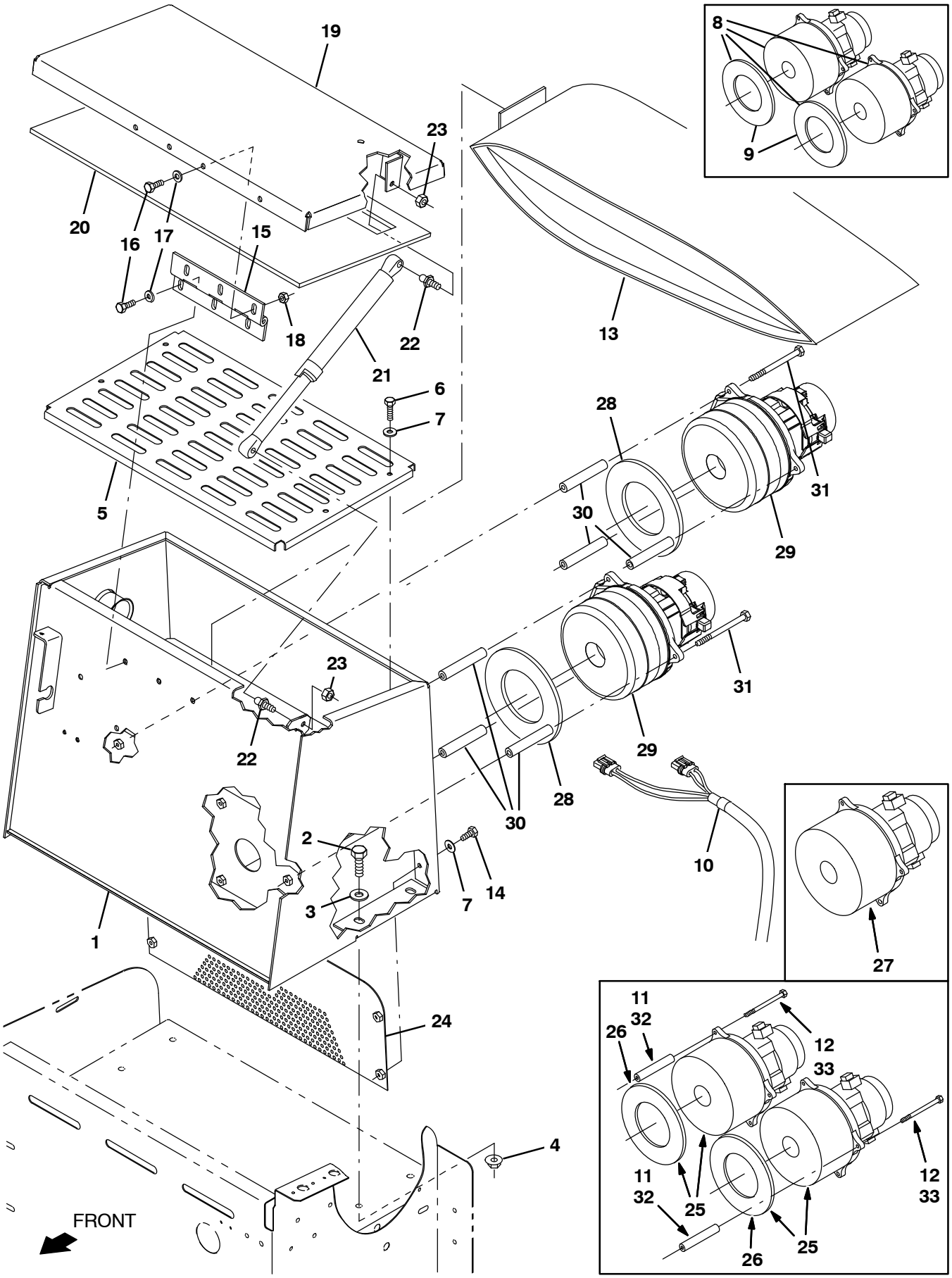

352169 – E

Fig. 5 – Vacuum Wand Box Group, Dual Fan

NOTE: Dual Vacuum Fan Kit, Tennant Part Number 83437, includes Fig. 2, Fig. 5, and Fig. 6.

	Ref.	Part No.	Serial Number	Description	Qty.
	1	83268	(000000–008000)	Box Assy, Vac Wand	1
	1	9021614	(008001–)	Box Assy, Vac Wand [Gray]	1
	2	39283	(000000–)	Screw, Hex, M10–1.5 X 25, 8.8	4
	3	32492	(000000–)	Washer, Flat, .38 Hard	4
	4	07791	(000000–)	Nut, Hex, Flange, M08–1.25	4
	5	83273	(000000–008000)	Screen, Vac Wand	1
	5	1077021	(008001–)	Panel, Screen, Vac Wand [Gray	1
	6	06945	(000000–)	Screw, Hex, M06–1.0 X 30, 8.8	4
	7	32490	(000000–)	Washer, Flat, .25 Hard	8
▽	8	17363	(000000– xxxxxx)	Fan Assy, Vacuum (See Breakdowns)	2
▲	9	223264	(000000– xxxxxx)	Seal, Vac Fan	1
	10	81929	(000000–)	Harness, Wire, Vac Wand	1
	11	18811	(000000–003902)	Tube, Steel .26X.50X3.16L	6
	12	09773	(000000–003902)	Screw, Hex, M06–1.0 X 100, Ss	6
	13	1067452	(000000–)	Bag, Vacuum, Paper [1pick=1pkg of 10bag]	1
	14	06942	(000000–)	Screw, Hex, M06–1.0 X 16, 8.8	4
	15	86430	(000000–)	Hinge	1
	16	87308	(000000–)	Screw, Hex, M06–1.00 X 12	6
	17	32483	(000000–)	Washer, Flat, .25 Hard	6
	18	07790	(000000–)	Nut, Hex, Flange, M06–1.00	3
	19	83279	(000000–008000)	Door Wldt, Vac Wand	1
	19	1077023	(008001–)	Door Wldt, Box, Vac Wand [Gray]	1
	20	83282	(000000–)	Gasket, Door	1
	21	83278	(000000–)	Spring, Gas	1
	22	58494	(000000–)	Stud, Ball, Gas Spring	2
	23	87435	(000000–)	Nut, Hex, Flexlock, .31–18	2
	24	385663	(000000–008000)	Screen, Vac Wand	1
	24	1077029	(008001–)	Screen Wldt, Vac Wand [Gray]	1
▽	25	398520	(xxxxxx–003902)	Fan Assy, Vacuum (See Breakdowns) (Replaced by 9004054)	2
▲	26	223264	(xxxxxx–003902)	Seal, Vac Fan	1
▽	27	1039617	(003903–004361)	Fan, Vacuum, 5.7d, 036vdc, 3 Stage	1
▲		1041772	(003903–004361)	Brush Kit, Motor	2
▲		1041766	(003903–004361)	Cover, Cooling Fan	1
	28	10912	(003903–)	Seal, Rbr, Clsd, 0.375, 5.0d 2.5h	2
	29	9017657	(004362–006624)	Kit, Fan, Vac Fan Offset	1
	29	1076096	(006625–)	Fan, Vacuum, 5.7d, 036vdc, 3 Stage [Pkrd]	1
	30	1076122	(006625–)	Tube, 0.25id 0.52od 03.2l, Stl	3
	31	09773	(006625–)	Screw, Hex, M6 X 1.00 X 100mm, Ss	3
	32	1042580	(003903–006624)	Tube, 0.25id 0.52od 03.4l, Stl	3
	33	1043003	(003903–006624)	Screw, Hex, M6 X 1.00 X 110mm, Ss	3

Fig. 6 – Vacuum Wand Electrical Group, Dual Fan

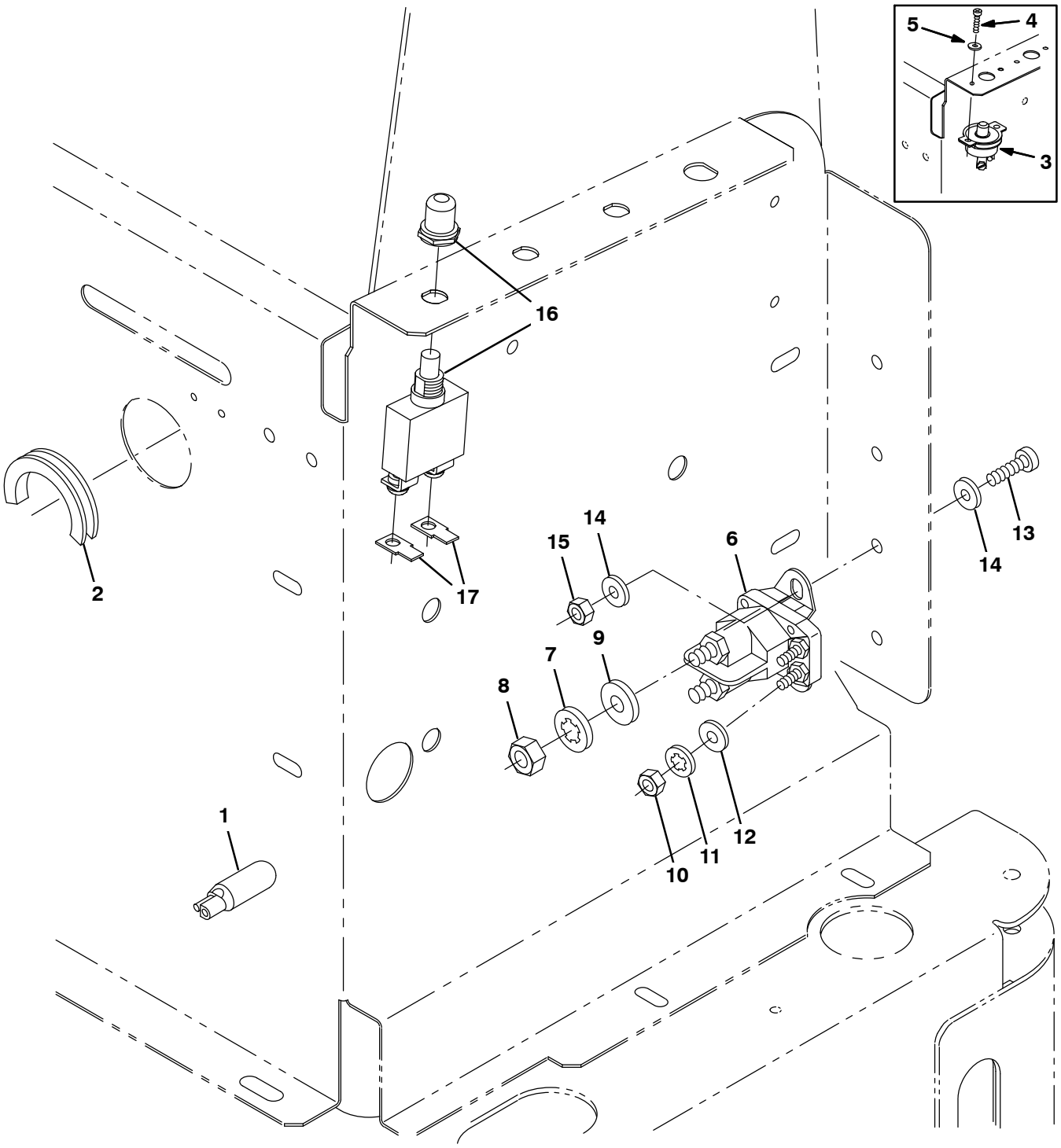

356244 – E

Fig. 6 – Vacuum Wand Electrical Group, Dual Fan

NOTE: Dual Vacuum Fan Kit, Tennant Part Number 83437, includes Fig. 2, Fig. 5, and Fig. 6.

Ref.	Part No.	Serial Number	Description	Qty.
1	222290	(000000–)	Diode, Electric Plug	1
2	47080	(000000–)	Grommet, Rubber	1
3	9003357	(000000–003717)	Circuitbreaker Kit, 40a, Replmt, Ci	1
4	25006	(000000–003717)	Screw, Pan, #08–32 X 0.88, G1	2
5	19065	(000000–003717)	Washer, Flat, #08	2
6	386810	(000000–)	Contactor, 36vdc, 100a, Sp N/O	1
7	32984	(000000–)	Washer, Lock, Int, .31	2
8	20170	(000000–)	Nut, Hex, Jam, .31–24	2
9	39349	(000000–)	Washer, Flat, .31 Sae	2
10	01713	(000000–)	Nut, Hex, Std, #10–32, G2	2
11	19324	(000000–)	Washer, Flat, #10 Sae	2
12	32980	(000000–)	Washer, Lock, Int, #10	2
13	06933	(000000–)	Screw, Pan, M05–0.8 X 16, 4.8	1
14	19066	(000000–)	Washer, Flat, #10	2
15	06549	(000000–)	Nut, Hex, Lock, M05–0.8, Nl	1
16	383727	(003718–003902)	Circuitbreaker, 40.0a, Resetable	1
16	383728	(003903–)	Circuitbreaker, 50.0a	1
17	68106	(003903–)	Terminal, Tab, .25 .19h .84l	2

Fig. 7 – Side Brush Lift Group, Left Hand

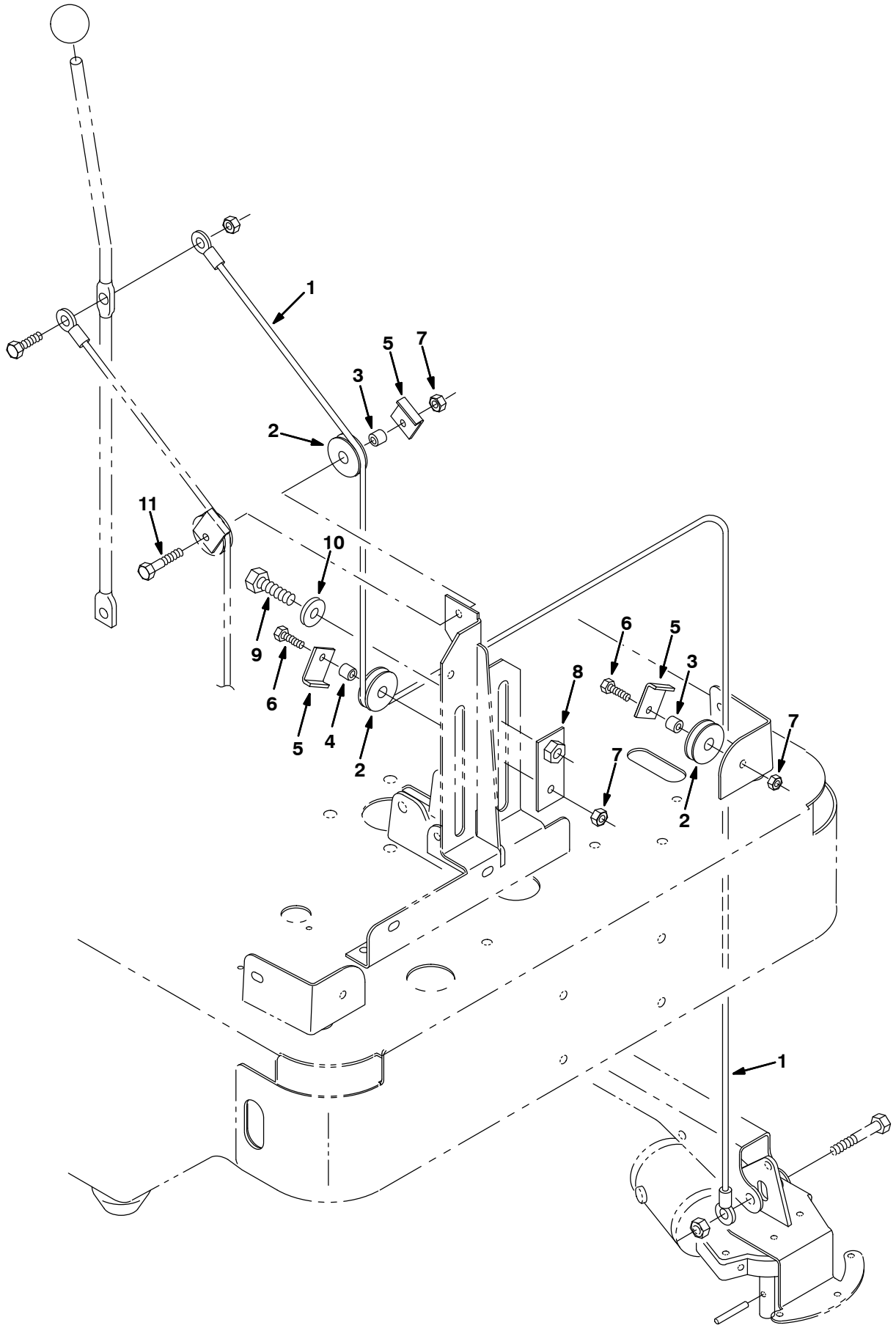

352174 – ALL

Fig. 7 – Side Brush Lift Group, Left Hand

NOTE: Side Brush Kit, Left Hand, Tennant Part Number 83229, includes Fig. 7 and Fig. 9.

Ref.	Part No.	Serial Number	Description	Qty.
1	81785	(000000–)	Cable, Sidebrush Lift Lh	1
2	369781	(000000–)	Pulley, Cable, 1.5d, Nyl	3
3	222460	(000000–)	Sleeve	2
4	80395	(000000–)	Sleeve	1
5	54400	(000000–)	Angle	3
6	76570	(000000–)	Screw, Hex, M08–1.25 X 30, 8.8	2
7	08709	(000000–)	Nut, Hex, Lock, M08–1.25,Nl	3
8	81955	(000000–)	Plate, Sidebrush Lift	1
9	06967	(000000–)	Scr Hex M12X1.75 20	1
10	32493	(000000–)	Washer, Flat, .50 Hard	1
11	06956	(000000–)	Screw, Hex, M08–1.25 X 45, 8.8	1

Fig. 8 – Side Brush Lift Group, Right Hand (Japan Only)

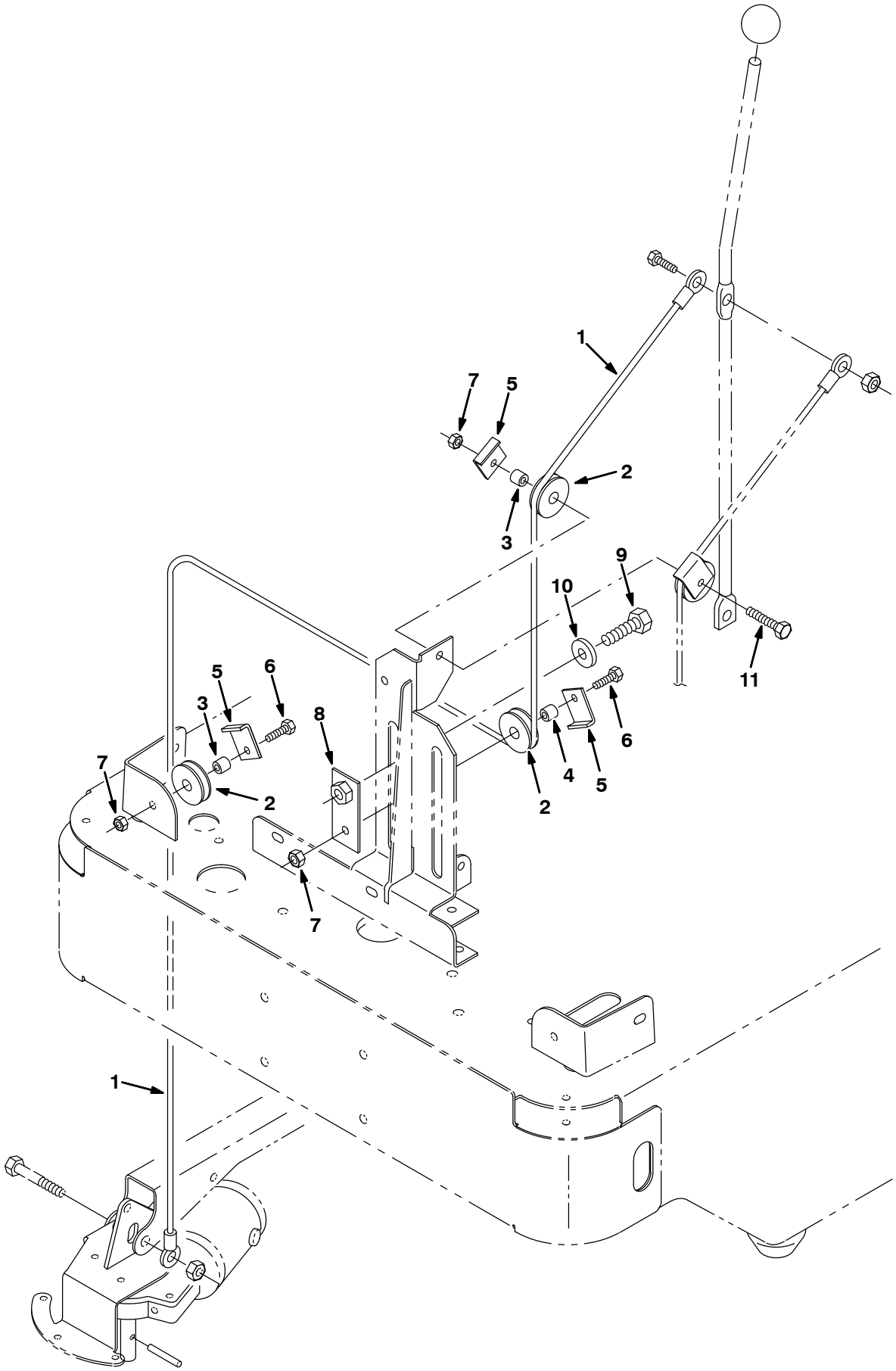

353197 – JP

Fig. 8 – Side Brush Lift Group, Right Hand (Japan Only)

NOTE: Side Brush Kit, Left Hand, Tennant Part Number 384436, includes Fig. 7 and Fig. 9.

Ref.	Part No.	Serial Number	Description	Qty.
1	81795	(000000–)	Cable, Glv .13d 037.8l .25eye /.50eye	1
2	369781	(000000–)	Pulley, Cable, 1.5d, Nyl	3
3	222460	(000000–)	Sleeve	2
4	80395	(000000–)	Sleeve	1
5	54400	(000000–)	Angle	3
6	76570	(000000–)	Screw, Hex, M08–1.25 X 30, 8.8	2
7	08709	(000000–)	Nut, Hex, Lock, M08–1.25,Nl	3
8	81955	(000000–)	Plate, Sidebrush Lift	1
9	06967	(000000–)	Scr Hex M12X1.75 20	1
10	32493	(000000–)	Washer, Flat, .50 Hard	1
11	06956	(000000–)	Screw, Hex, M08–1.25 X 45, 8.8	1

Fig. 9 – Side Brush Motor Group, Left Hand

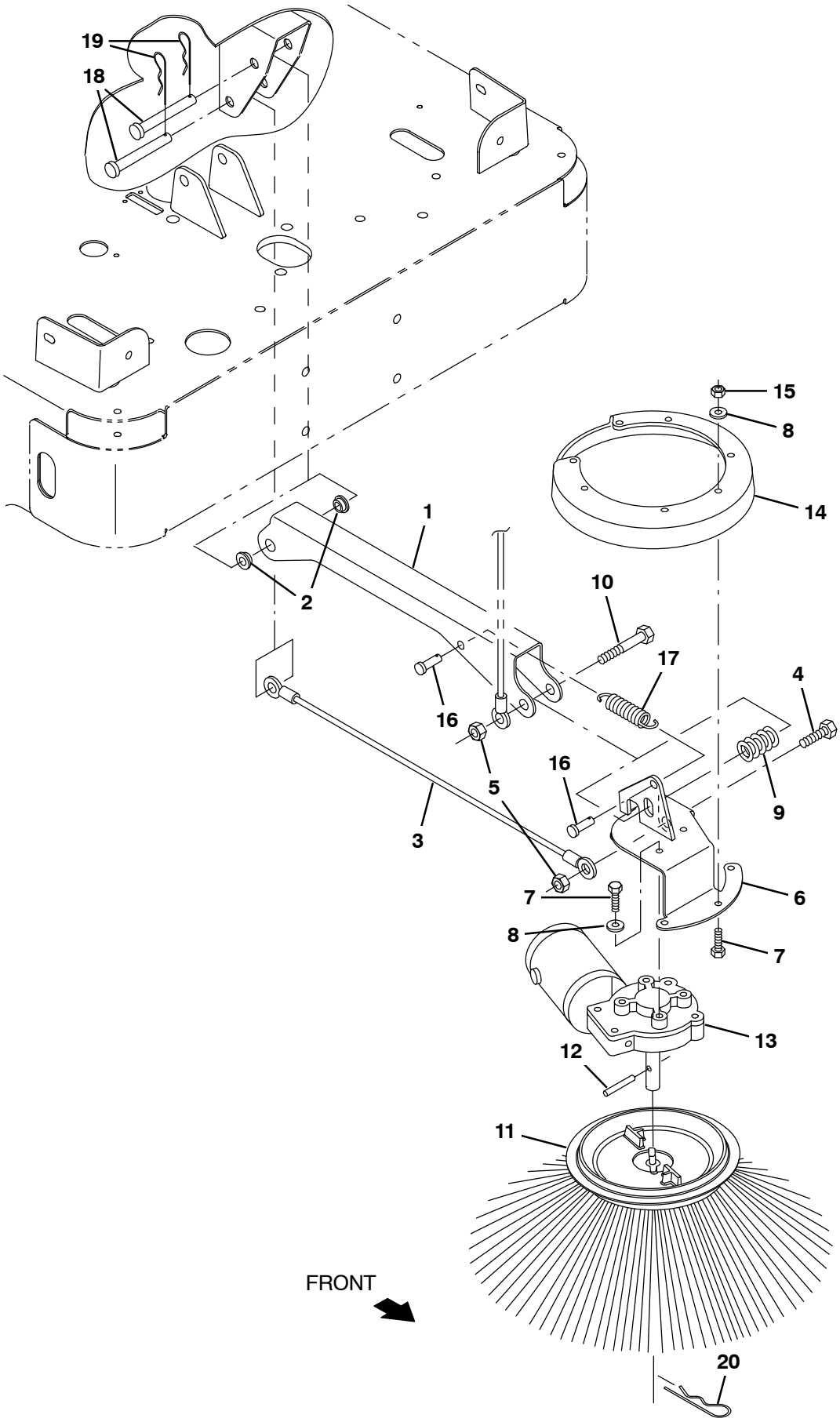

352176 – E

Fig. 9 – Side Brush Motor Group, Left Hand

NOTE: Side Brush Kit, Left Hand, Tennant Part Number 83229, includes Fig. 7 and Fig. 9.

	Ref.	Part No.	Serial Number	Description	Qty.
	1	81783	(000000–)	Channel, Mtg, Sidebrush	1
	2	15648	(000000–)	Bearing, Flange	2
	3	81784	(000000–)	Cable, Sidebrush	1
	4	41345	(000000–)	Screw, Hex, M12–1.75 X 25, 8.8	1
	5	08711	(000000–)	Nut, Hex, Lock, M12–1.75,Nl	2
	6	81750	(000000–)	Bracket Wldt, Sidebrush	1
	7	15678	(000000–)	Screw, Hex, M06–1.0 X 16, Ss	9
	8	01684	(000000–)	Washer, Flat, .25 Ss	9
	9	87242	(000000–)	Spring,Die .50 Id 1.00 Od 1.25	1
	10	06972	(000000–)	Screw, Hex, M12–1.75 X 60, 8.8	1
	11	80042	(000000–)	Brush, Side	1
	12	11516	(000000–)	Pin	1
▽	13	1008275	(000000–)	Motor, Ele, 36vdc 0.08hp 0068rpm 04.5a	1
▲		81919	(000000–)	Brush&Spring Assy Se	2
▲		80127	(000000–)	Cap, Brush	2
▲		369795	(000000–)	Brushholder	2
▲		369796	(000000–)	Clip	2
	14	81822	(000000–)	Guard,Sidebrush	1
	15	08712	(000000–)	Nut, Hex, Lock, M06–1.0, Nl,Ss	5
	16	39019	(000000–)	Pin, Clevis	2
	17	15047	(000000–)	Spring, Extension	1
	18	06279	(000000–)	Pin, Clevis	2
	19	44906	(000000–)	Pin, Cotter, Hair, 0.38d .093 Wir	2
	20	02942	(000000–)	Pin, Hair, Cotter, 0.62d .120 Wir	1

Fig. 10 – Side Brush Motor Group, Right Hand (Japan Only)

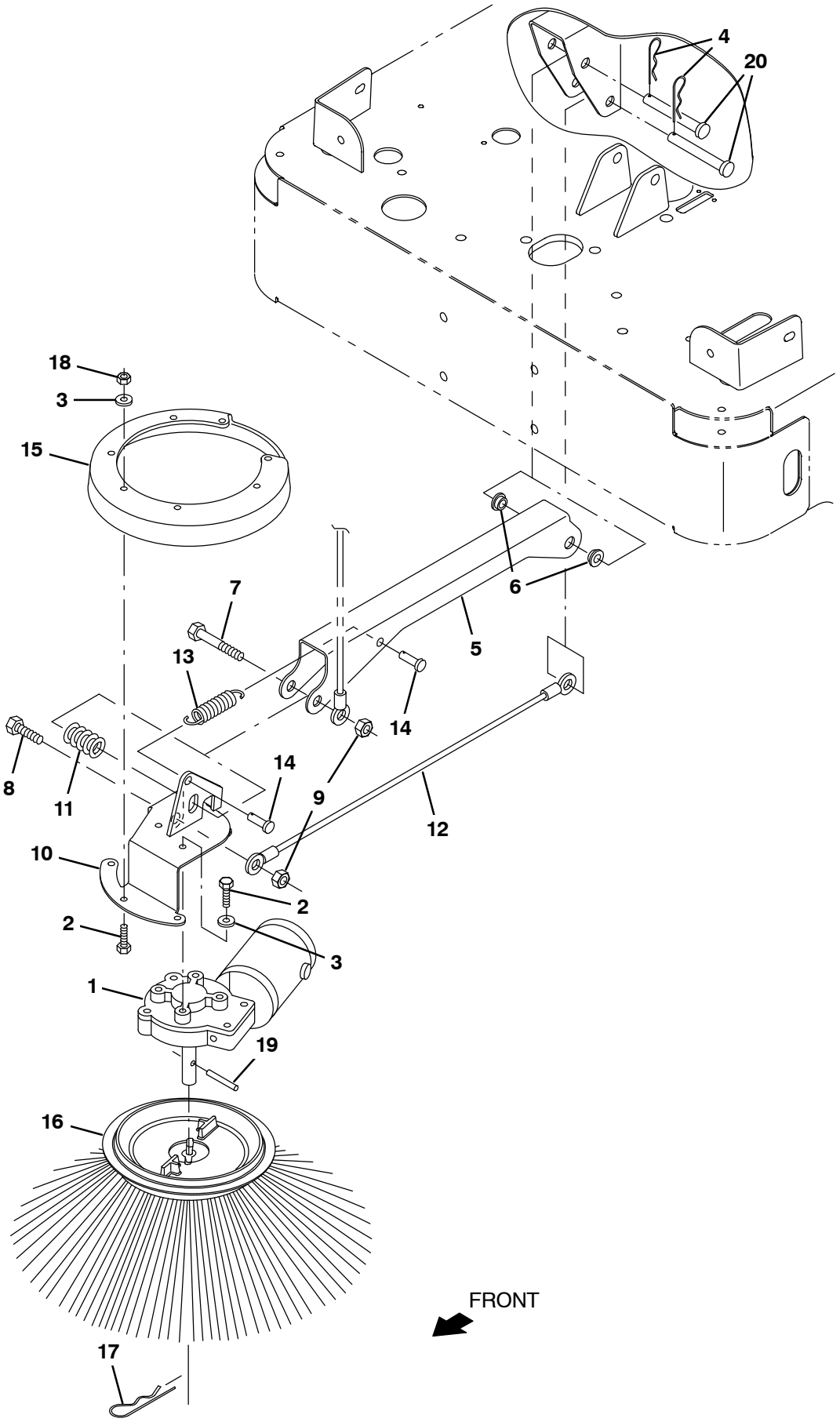

352133 – JP

Fig. 10 – Side Brush Motor Group, Left Hand (Japan Only)

NOTE: Side Brush Kit, Left Hand, Tennant Part Number 384436, includes Fig. 7 and Fig. 9.

	Ref.	Part No.	Serial Number	Description	Qty.
▽	1	1008274	(000000–)	Motor, Ele, 36vdc 0.08hp 0068rpm 04.5a	1
▲		81919	(000000–)	Brush&Spring Assy Se	2
▲		80127	(000000–)	Cap, Brush	2
▲		369795	(000000–)	Brushholder	2
▲		369796	(000000–)	Clip	2
	2	15678	(000000–)	Screw, Hex, M06–1.0 X 16, Ss	9
	3	01684	(000000–)	Washer, Flat, .25 Ss	9
	4	44906	(000000–)	Pin, Hair Cotter	2
	5	81783	(000000–)	Channel, Mtg, Sidebrush	1
	6	15648	(000000–)	Bearing, Flange	2
	7	06972	(000000–)	Screw, Hex, M12–1.75 X 60, 8.8	1
	8	41345	(000000–)	Screw, Hex, M12–1.75 X 25, 8.8	1
	9	08711	(000000–)	Nut, Hex, Lock, M12–1.75,Nl	2
	10	81786	(000000–)	Bracket Wldt, Sidebrush	1
	11	87242	(000000–)	Spring, Die .50 Id 1.00 Od 1.25	1
	12	81784	(000000–)	Cable, Sidebrush	1
	13	15047	(000000–)	Spring, Extension	1
	14	39019	(000000–)	Pin, Clevis	2
	15	81822	(000000–)	Guard,Sidebrush	1
	16	80042	(000000–)	Brush, Side	1
	17	02942	(000000–)	Pin, Hair Cotter	1
	18	08712	(000000–)	Nut, Hex, Lock, M06–1.0, Nl,Ss	5
	19	11516	(000000–)	Pin	1
	20	06279	(000000–)	Pin, Clevis	2

Fig. 11 – Rollout Battery Case Kit (000000–008000)

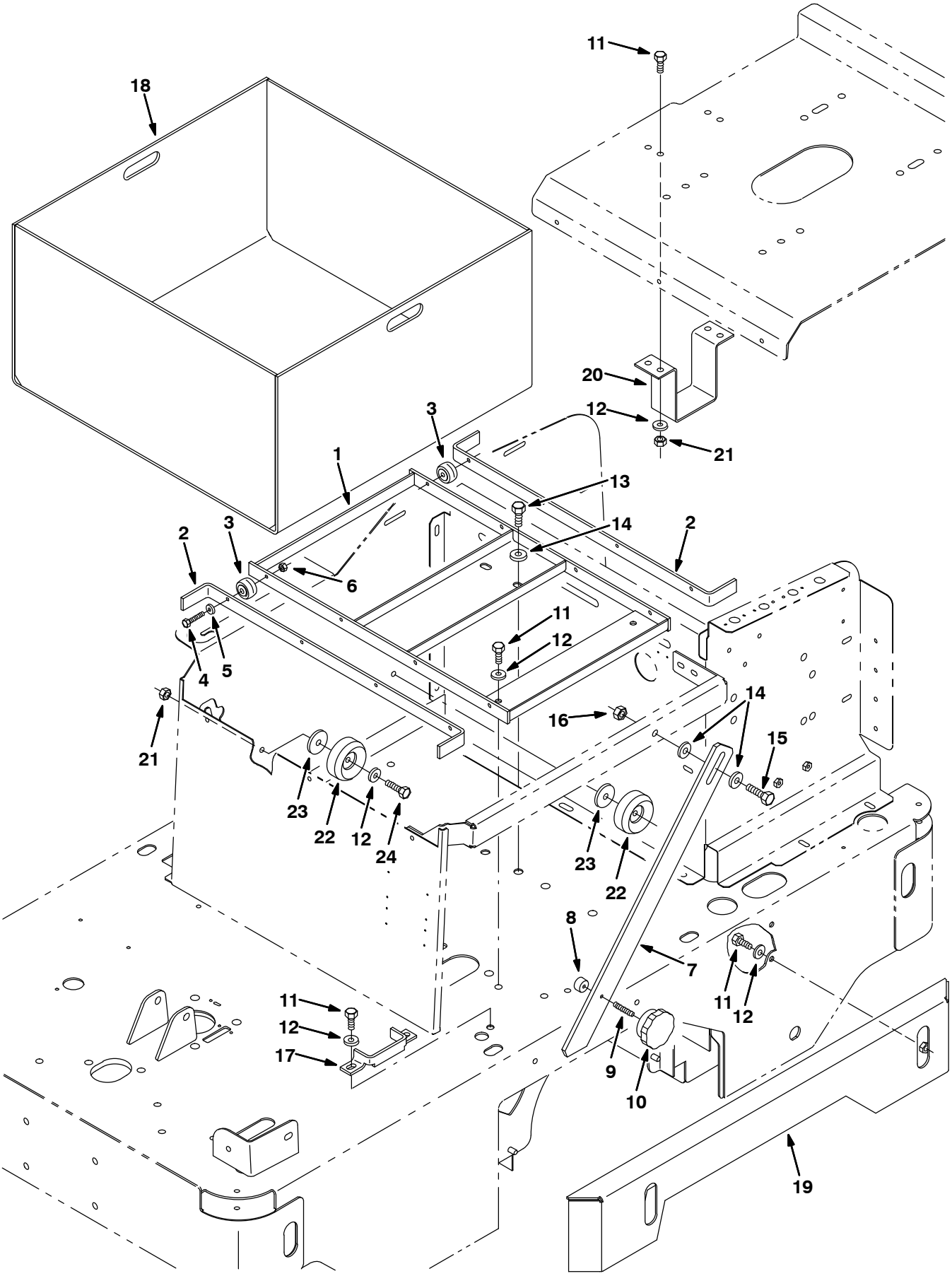

352186 – E

Fig. 11 – Rollout Battery Case Kit (000000–008000)

	Ref.	Part No.	Serial Number	Description	Qty.
▽		83376	(000000–)	Battery Kit, Rollout, 6100	1
▲	1	83371	(000000–)	Bracket Wldt, Roller, Battery	1
▲	2	83370	(000000–)	Channel, Roller, Battery Case	2
▲	3	369415	(000000–)	Bearing, Cam Follower	8
▲	4	25047	(000000–)	Screw, Hex, .25–20 X 1.25, G5	8
▲	5	32490	(000000–)	Washer, Flat, .25 Hard	8
▲	6	32981	(000000–)	Nut, Hex, Lock, .25–20, Nl	8
▲	7	83362	(000000–)	Brace, Battery Case	1
▲	8	83377	(000000–)	Bumper, Rubber	1
▲	9	83381	(000000–)	Rod, Threaded, M6 X 1.50 Lg	1
▲	10	83361	(000000–)	Knob, 2.38D .88H M6 Insert	1
▲	11	16931	(000000–)	Screw, Hex, M08–1.25 X 20, 8.8	14
▲	12	32491	(000000–)	Washer, Flat, .31 Hard	14
▲	13	06961	(000000–)	Screw, Hex, M10–1.5 X 20, 8.8	2
▲	14	32492	(000000–)	Washer, Flat, .38 Hard	4
▲	15	39284	(000000–)	Screw, Hex, M10–1.5 X 35, 8.8	1
▲	16	41430	(000000–)	Nut, Hex, Lock, M10–1.5, Nl	1
▲	17	83363	(000000–)	Bracket, Support, Brace	1
▲	18	83365	(000000–)	Case Wldt, Battery, Roll–Out	1
▲	19	83375	(000000–)	Channel Wldt, Bumper	1
▲	20	83382	(000000–)	Bracket, Stop, Battery Case	1
▲	21	08709	(000000–)	Nut, Hex, Lock, M08–1.25,Nl	6
▲	22	369481	(000000–)	Bumper, Rubr. 2.50Diax 1.00	2
▲	23	36996	(000000–)	Washer	2
▲	24	76570	(000000–)	Screw, Hex, M08–1.25 X 30, 8.8	2

Fig. 12 – Rollout Battery Pack Kit (000000–008000)

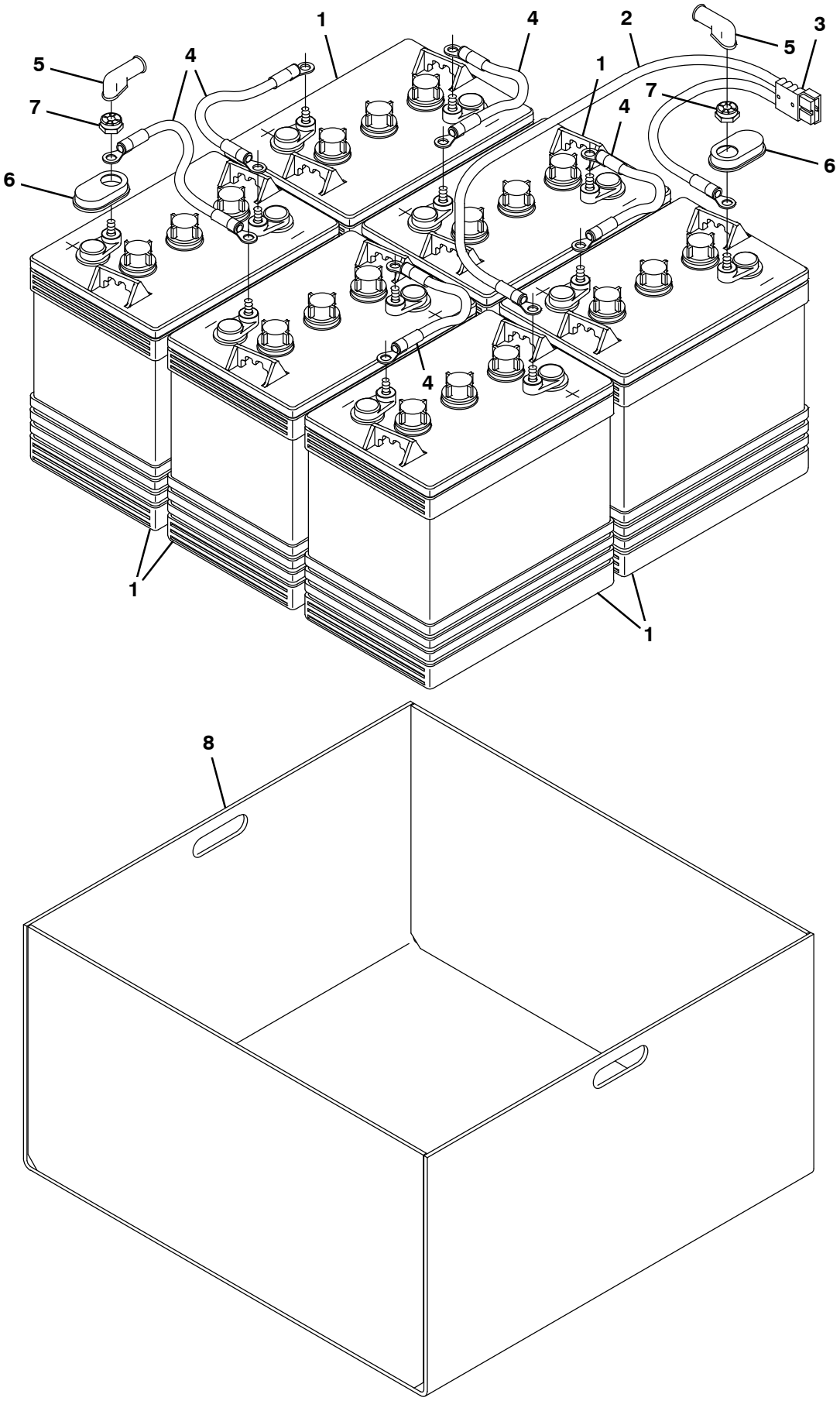

352178 – E

Fig. 12 – Rollout Battery Pack Kit (000000–008000)

	Ref.	Part No.	Serial Number	Description	Qty.
▽		83358	(000000–)	Battery Pack Kit, Rollout, 6100	1
▲	1	10155	(000000–)	Battery, 6V, Wet	6
▲▽	2	222217	(000000–)	Harness, Cable, Battery	1
▲▲	3	130155	(000000–)	Connector, Battery, 6ga 50a, Gray[2cont]	1
▲	4	63740	(000000–)	Cable, Battery	5
▲	5	02076	(000000–)	Boot	12
▲	6	1041030	(000000–)	Cap, Battery	12
▲	7	87435	(000000–)	Nut, Hex, Flexlock, .31–18	12
▲	8	83365	(000000–)	Case Wldt, Battery, Roll–Out	1

Fig. 13 – Rollout Battery Cart Kit (000000–008000)

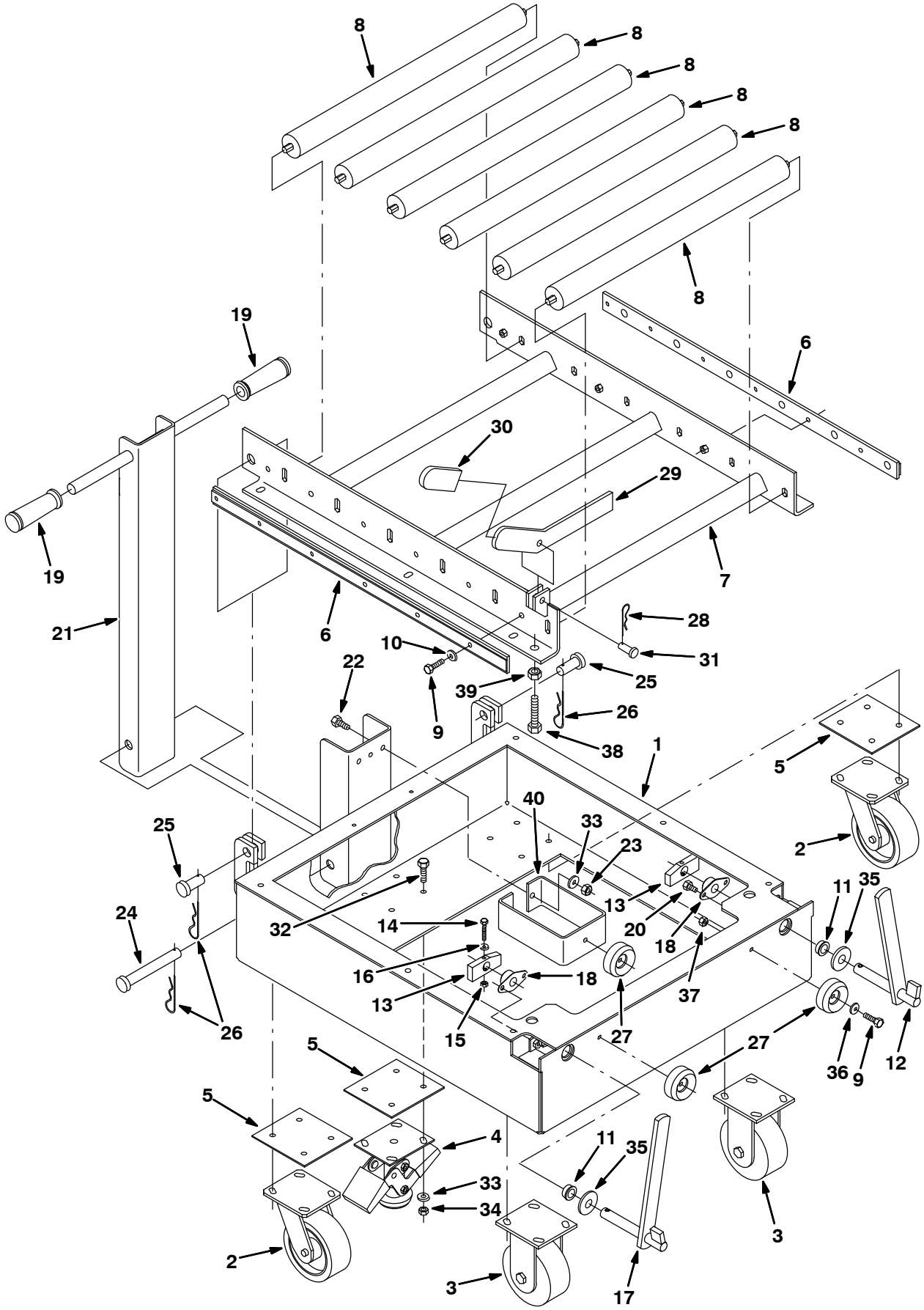

351342 – E

Fig. 13 – Rollout Battery Cart Kit (000000–008000)

	Ref.	Part No.	Serial Number	Description	Qty.
▽		369362	(000000–)	Dolly, Battery Kit	1
▲	1	369435	(000000–)	Frame, Batt Cart, 7200	1
▲	2	1049046	(000000–)	Caster, Swivel, 5.0d 2.0w, 4hole, Gray	2
▲	3	1049021	(000000–)	Caster, Rigid, 5.0d X 2.0w, 4hole	2
▲	4	377328	(000000–)	Lock, Floor	1
▲	5	369372	(000000–)	Plate, Spacer, Caster	3
▲	6	369466	(000000–)	Cap Wldt, Roller Shaft	2
▲	7	369462	(000000–)	Frame Wldt, Mtg, Roller	1
▲	8	369371	(000000–)	Roller Assy, 24 In, Batt Cart	6
▲	9	09010	(000000–)	Screw, Hex, M08–1.25 X 25, Ss	12
▲	10	01685	(000000–)	Washer, Flat, .31 Ss	12
▲	11	369487	(000000–)	Grommet,Nylon, .75Id,1.00Dmtg	2
▲	12	369473	(000000–)	Lock Wldt, Lh, Batt Cart	1
▲	13	369478	(000000–)	Block, Stop, Batt Cart Lock	2
▲	14	06947	(000000–)	Screw, Hex, M06–1.0 X 40, 8.8	2
▲	15	08708	(000000–)	Nut, Hex, Lock, M06–1.0, Nl	2
▲	16	01684	(000000–)	Washer, Flat, .25 Ss	2
▲	17	369474	(000000–)	Lock Wldt, Rh, Batt Cart	1
▲	18	223065	(000000–)	Bearing, Flange	2
▲	19	1066506	(000000–)	Grip, Handle, Round	2
▲	20	15675	(000000–)	Screw, Hex, M08–1.25 X 16, Ss	4
▲	21	369470	(000000–)	Handel Wldt, Batt Cart	1
▲	22	39283	(000000–)	Screw, Hex, M10–1.5 X 25, 8.8	2
▲	23	66185	(000000–)	Nut–Hx Std M10X1.25	2
▲	24	54660	(000000–)	Pin, Clevis	1
▲	25	02141	(000000–)	Pin, Clevis	2
▲	26	55094	(000000–)	Pin, Hair Cotter	3
▲	27	369481	(000000–)	Bumper, Rubr. 2.50Diax 1.00	3
▲	28	21120	(000000–)	Pin, Haircotter	1
▲	29	369496	(000000–)	Bar, Batt.Stop	1
▲	30	385612	(000000–)	Grip, Handle	1
▲	31	58078	(000000–)	Pin, Clevis	1
▲	32	03192	(000000–)	Screw, Hex, M10–1.5 X 30, 8.8	20
▲	33	32492	(000000–)	Washer, Flat, .38 Hard	22
▲	34	41430	(000000–)	Nut, Hex, Lock, M10–1.5, Nl	20
▲	35	39350	(000000–)	Washer, Flat, .75 Sae	2
▲	36	32491	(000000–)	Washer, Flat, .31 Hard	3
▲	37	08709	(000000–)	Nut, Hex, Lock, M08–1.25,Nl	3
▲	38	06416	(000000–)	Screw, Hex, M12–1.75 X 50, Fl	2
▲	39	39313	(000000–)	Nut, Hex, Std, M12–1.75	2
▲	40	83380	(000000–)	Bracket, Stop, Battery Case	1

Fig. 14 – Flashing Light Kit

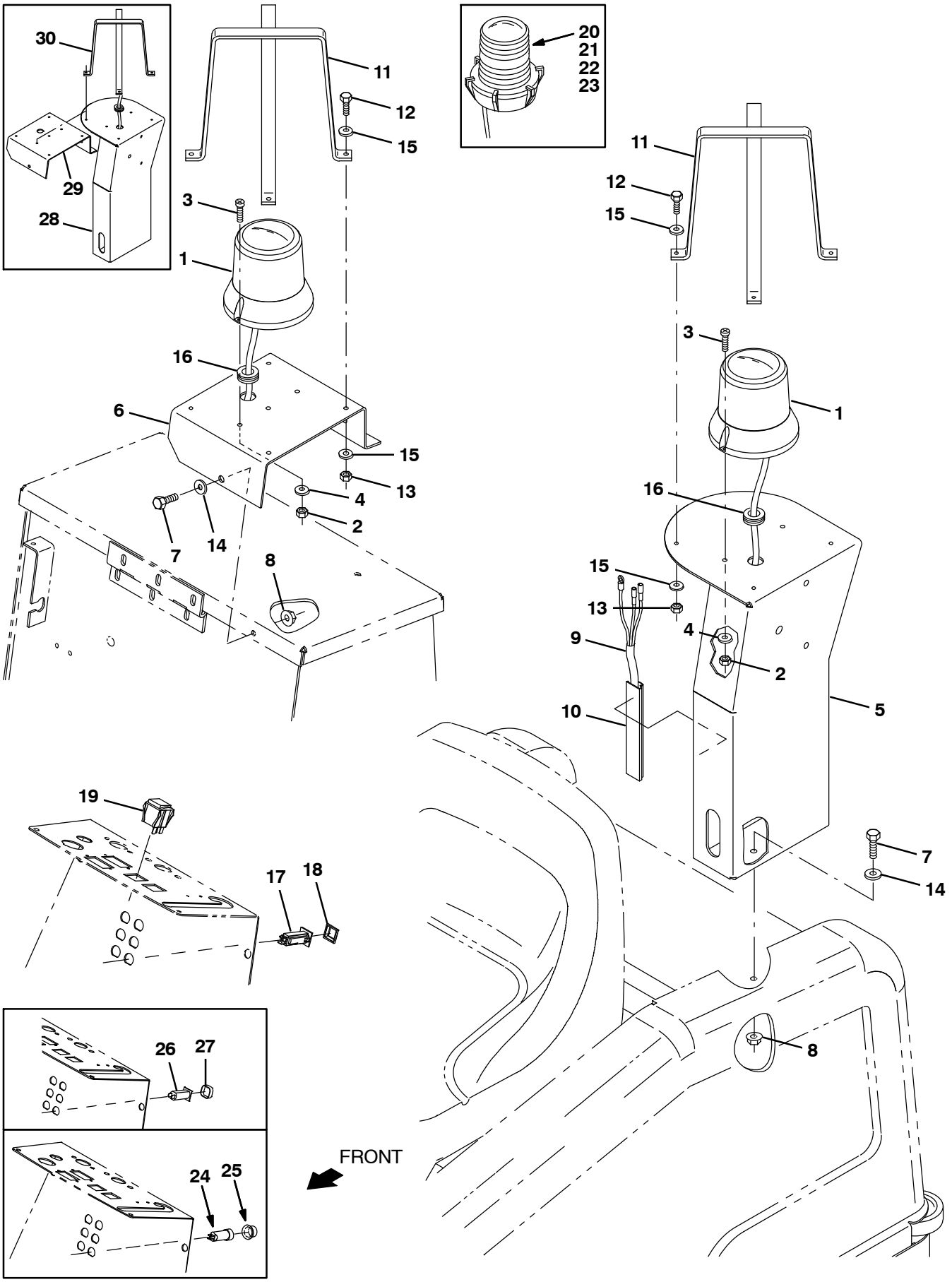

352207 – E, NA, JP

Fig. 14 – Flashing Light Kit

	Ref.	Part No.	Serial Number	Description	Qty.
▽		83209	(000000–)	Light Kit, Flsh Lrc 36V	1
▲	1	1075296	(000000–)	Light, Flsh, 12vdc, Amb, Rwk	1
▲	2	06549	(003105–)	Nut, Hex, Lock, M5 X 0.8, Nl	2
▲	3	06934	(003105–)	Screw, Pan, M5 X 0.8 X 20, 4.8	2
▲	4	19066	(003105–)	Washer, Flat, #10	2
▲	5	1077030	(008001–)	Pedestal, Light/Alarm [Gray]	1
▲	6	1077031	(008001–)	Bracket, Light/Alarm [Gray]	1
▲	7	16735	(000000–)	Screw, Hex, M08–1.25 X 16, 8.8	2
▲	8	07791	(000000–)	Nut, Hex, Flange, M08–1.25	2
▲	9	81946	(000000–)	Harness, Wire, Warning/Backup	1
▲	10	72114	(000000–)	Duct, Vinyl	1
▲	11	1077032	(008001–)	Guard Wldt, Light W/ Alarm [Gray]	1
▲	12	09252	(000000–)	Screw, Hex, M05–0.8 X 20	4
▲	13	06549	(000000–)	Nut, Hex, Lock, M05–0.8,Nl	4
▲	14	39349	(000000–)	Washer, Flat, .31 Sae	2
▲	15	19066	(000000–)	Washer, Flat, 10	8
▲	16	10632–2	(000000–)	Grommet, Rubber	1
▲	17	1064188	(004788–)	Circuitbreaker, 15a, Resetable	1
▲	18	1064191	(004788–)	Boot, Circuitbreaker	1
▲	19	360520	(000000–)	Switch, Rocker, Spdt, 3Pos	1
	20	45283	(000000–003104)	Bulb	1
	21	58520	(000000–003104)	Lens,Flashing Lite Fr207 Amber	1
	22	58518	(000000–003104)	Lens,Flashing Lite Fr207 Red	1
	23	58519	(000000–003104)	Lens,Flashing Lite Fr207 Blue	1
	24	57803	(000000–003984)	Circuitbreaker, 15A	1
	25	57751	(000000–003984)	Boot	1
	26	1045858	(003985–004787)	Circuitbreaker, 15a, Resetable	1
	27	1046173	(003985–004787)	Boot, Circuitbreaker	1
	28	83530	(000000–008000)	Pedestal	1
	29	83531	(000000–008000)	Bracket, Fl Light & B/U Alarm	1
	30	1070125	(000000–008000)	Guard Wldt, Light, Revl/Flsh	1

Fig. 15 – Backup Alarm Kit

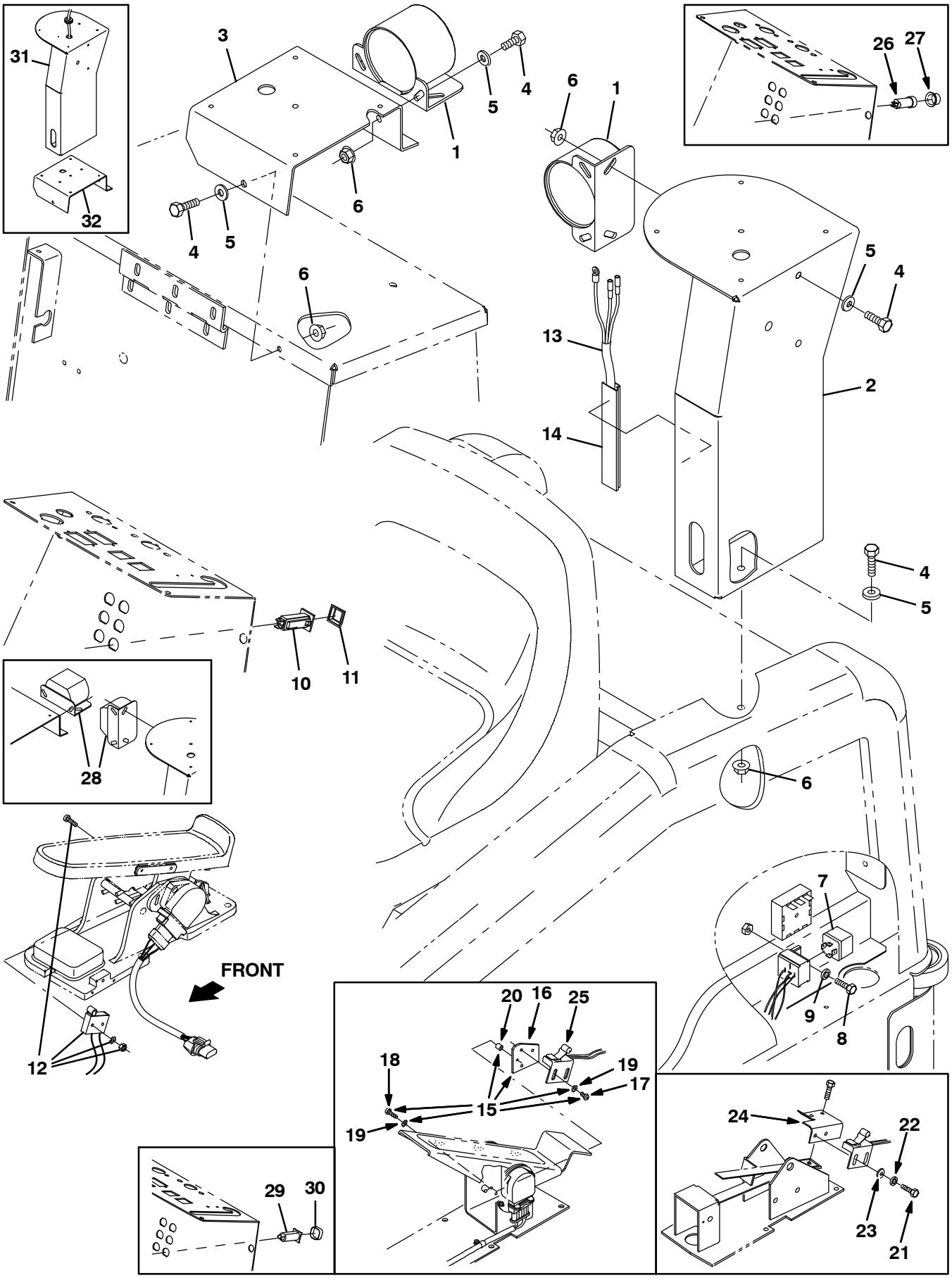

352209 – E, NA, JP

Fig. 15 – Backup Alarm Kit

	Ref.	Part No.	Serial Number	Description	Qty.
▽		83253	(000000–)	Alarm Kit, Backup, 36V, 6100	1
▲	1	9007131	(004480–)	Alarm Assy, Backup, 12/48vdc	1
▲	2	1077030	(008001–)	Pedestal, Light/Alarm [Gray]	1
▲	3	1077031	(008001–)	Bracket, Light/Alarm [Gray]	1
▲	4	16735	(000000–)	Screw, Hex, M08–1.25 X 16, 8.8	4
▲	5	39349	(000000–)	Washer, Flat, .31 Sae	4
▲	6	07791	(000000–)	Nut, Hex, Flange, M08–1.25	4
▲	7	398526	(000000–)	Relay, 36Vdc, 9A, Spdt	1
▲	8	12312	(000000–)	Screw, Hex, M05–0.8 X 12, 8.8	1
▲	9	32980	(000000–)	Washer, Lock, Int, #10	1
▲	10	1064188	(004788–)	Circuitbreaker, 15a, Resetable	1
▲	11	1064191	(004788–)	Boot, Circuitbreaker	1
▲	12	1042525	(003867–)	Switch Kit, Alarm, Backup [6100]	1
▲	13	81946	(000000–)	Harness, Wire, Warning/Backup	1
▲	14	72114	(000000–)	Duct, Vinyl	1
▽	15	81509	(002938–003866)	Bracket Kit, Alarm, Backup	1
▲	16	1020304	(002938–003866)	Bracket, Adapter, Switch	1
▲	17	06931	(002938–003866)	Screw, Pan, M5 X 0.8 X 6, 4.8	2
▲	18	06934	(002938–003866)	Screw, Pan, M5 X 0.8 X 20, 4.8	2
▲	19	07514	(002938–003866)	Washer, Lock, Int, #10, Ss	4
▲	20	1021184	(002938–003866)	Spacer, Plstc, 0.19b 0.38d 0.38l, Nyl	2
	21	12312	(000000–002937)	Screw, Hex, M05–0.8 X 12, 8.8	2
	22	32980	(000000–002937)	Washer, Lock, Int, #10	2
	23	19066	(000000–002937)	Washer, Flat, #10	2
	24	83265	(000000–002937)	Bracket, Mtg, Switch	1
	25	59965	(000000–003866)	Switch, Roller	1
	26	57803	(000000–003984)	Circuitbreaker, 15A	1
	27	57751	(000000–003984)	Boot	1
	28	83254	(000000–004479)	Alarm Assy, Backup, 12–48vdc 82–102dba	1
	29	1045858	(003985–004787)	Circuitbreaker, 15a, Resetable	1
	30	1046173	(003985–004787)	Boot, Circuitbreaker	1
	31	83530	(000000–008000)	Pedestal	1
	32	83531	(000000–008000)	Bracket, Fl Light & B/U Alarm	1

Fig. 16 – Backup Alarm and Flashing Light Kit

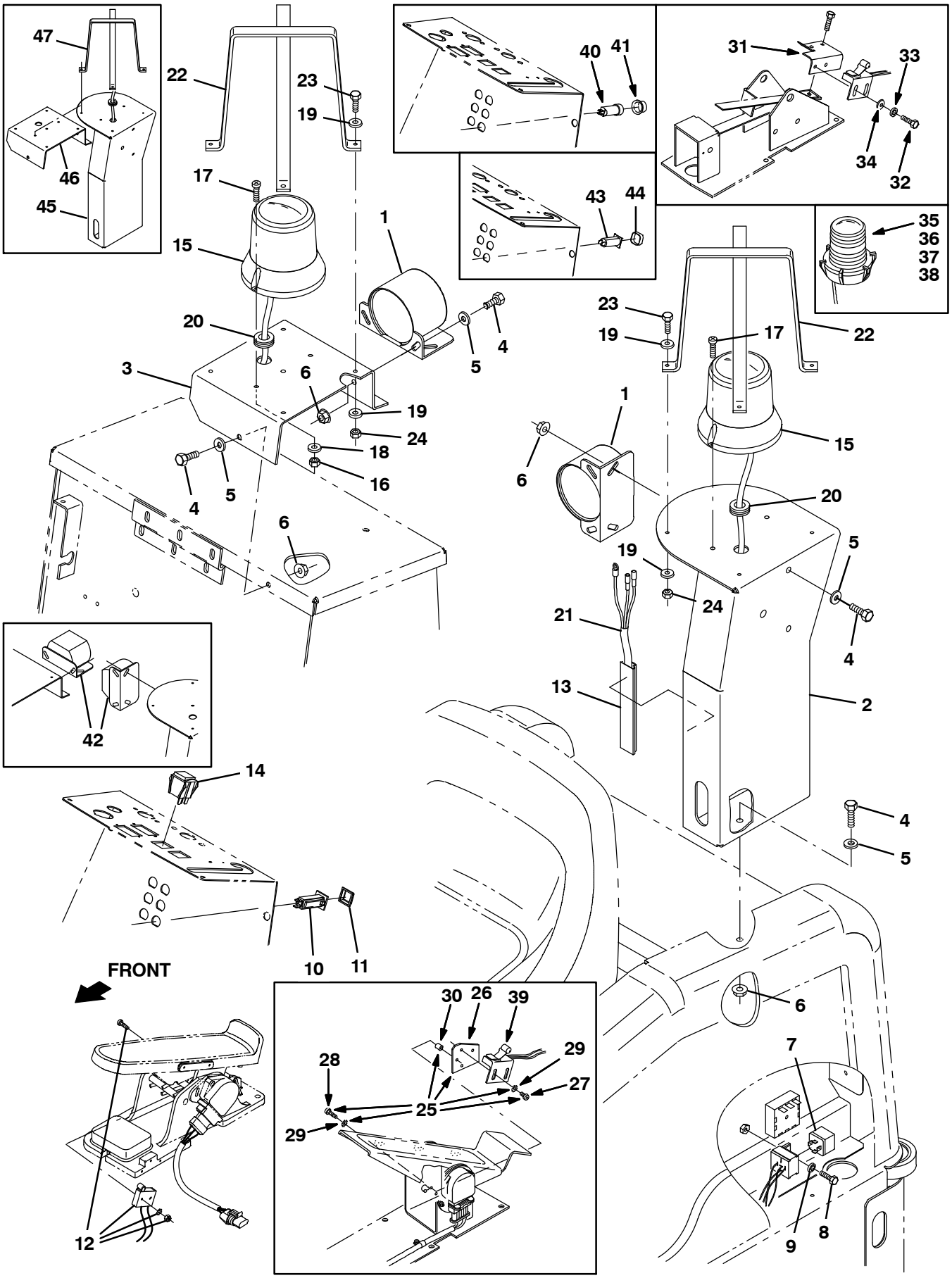

352337 – E, NA, JP

Fig. 16 – Backup Alarm and Flashing Light Kit

	Ref.	Part No.	Serial Number	Description	Qty.
▽		83389	(000000–)	Alarm Kit, Backup / A/V, Ci [6100]	1
▲	1	9007131	(004480–)	Alarm Assy, Backup, 12/48vdc	1
▲	2	1077030	(008001–)	Pedestal, Light/Alarm [Gray]	1
▲	3	1077031	(008001–)	Bracket, Light/Alarm [Gray]	1
▲	4	16735	(000000–)	Screw, Hex, M08–1.25 X 16, 8.8	4
▲	5	39349	(000000–)	Washer, Flat, .31 Sae	4
▲	6	07791	(000000–)	Nut, Hex, Flange, M08–1.25	4
▲	7	398526	(000000–)	Relay, 36Vdc, 9A, Spdt	1
▲	8	12312	(000000–)	Screw, Hex, M05–0.8 X 12, 8.8	1
▲	9	32980	(000000–)	Washer, Lock, Int, #10	1
▲	10	1064188	(004788–)	Circuitbreaker, 15a, Resetable	1
▲	11	1064191	(004788–)	Boot, Circuitbreaker	1
▲	12	1042525	(003867–)	Switch Kit, Alarm, Backup [6100]	1
▲	13	72114	(000000–)	Duct, Vinyl	1
▲	14	360520	(000000–)	Switch, Rocker, Spdt, 3Pos	1
▲	15	1075296	(000000–)	Light, Flsh, 12vdc, Amb, Rwk	1
▲	16	06549	(003105–)	Nut, Hex, Lock, M5 X 0.8, Nl	2
▲	17	06934	(003105–)	Screw, Pan, M5 X 0.8 X 20, 4.8	2
▲	18	19066	(003105–)	Washer, Flat, #10	2
▲	19	19066	(000000–)	Washer, Flat, 10	8
▲	20	10632–2	(000000–)	Grommet, Rubber	1
▲	21	81946	(000000–)	Harness, Wire, Warning/Backup	1
▲	22	1070125	(000000–)	Guard Wldt, Light, Revl/Flsh	1
▲	23	09252	(000000–)	Screw, Hex, M05–0.8 X 20	4
▲	24	06549	(000000–)	Nut, Hex, Lock, M05–0.8,Nl	4
▽	25	81509	(002938–003866)	Bracket Kit, Alarm, Backup	1
▲	26	1020304	(002938–003866)	Bracket, Adapter, Switch	1
▲	27	06931	(002938–003866)	Screw, Pan, M5 X 0.8 X 6, 4.8	2
▲	28	06934	(002938–003866)	Screw, Pan, M5 X 0.8 X 20, 4.8	2
▲	29	07514	(002938–003866)	Washer, Lock, Int, #10, Ss	4
▲	30	1021184	(002938–003866)	Spacer, Plstc, 0.19b 0.38d 0.38l, Nyl	2
	31	83265	(000000–002937)	Bracket, Mtg, Switch	1
	32	12312	(000000–002937)	Screw, Hex, M05–0.8 X 12, 8.8	2
	33	32980	(000000–002937)	Washer, Lock, Int, #10	2
	34	19066	(000000–002937)	Washer, Flat, #10	2
	35	45283	(000000–003104)	Bulb	1
	36	58520	(000000–003104)	Lens,Flashing Lite Fr207 Amber	1
	37	58518	(000000–003104)	Lens,Flashing Lite Fr207 Red	1
	38	58519	(000000–003104)	Lens,Flashing Lite Fr207 Blue	1
	39	59965	(000000–003866)	Switch, Roller	1
	40	57803	(000000–003984)	Circuitbreaker, 15A	1
	41	57751	(000000–003984)	Boot	1
	42	83254	(000000–004479)	Alarm Assy, Backup, 12–48vdc 82–102dba	1
	43	1045858	(003985–004787)	Circuitbreaker, 15a, Resetable	1
	44	1046173	(003985–004787)	Boot, Circuitbreaker	1
	45	83530	(000000–008000)	Pedestal	1
	46	83531	(000000–008000)	Bracket, Fl Light & B/U Alarm	1
	47	1070125	(000000–008000)	Guard Wldt, Light, Revl/Flsh	1

Fig. 17 – Battery Kit, Wet, 36Vdc 220AH

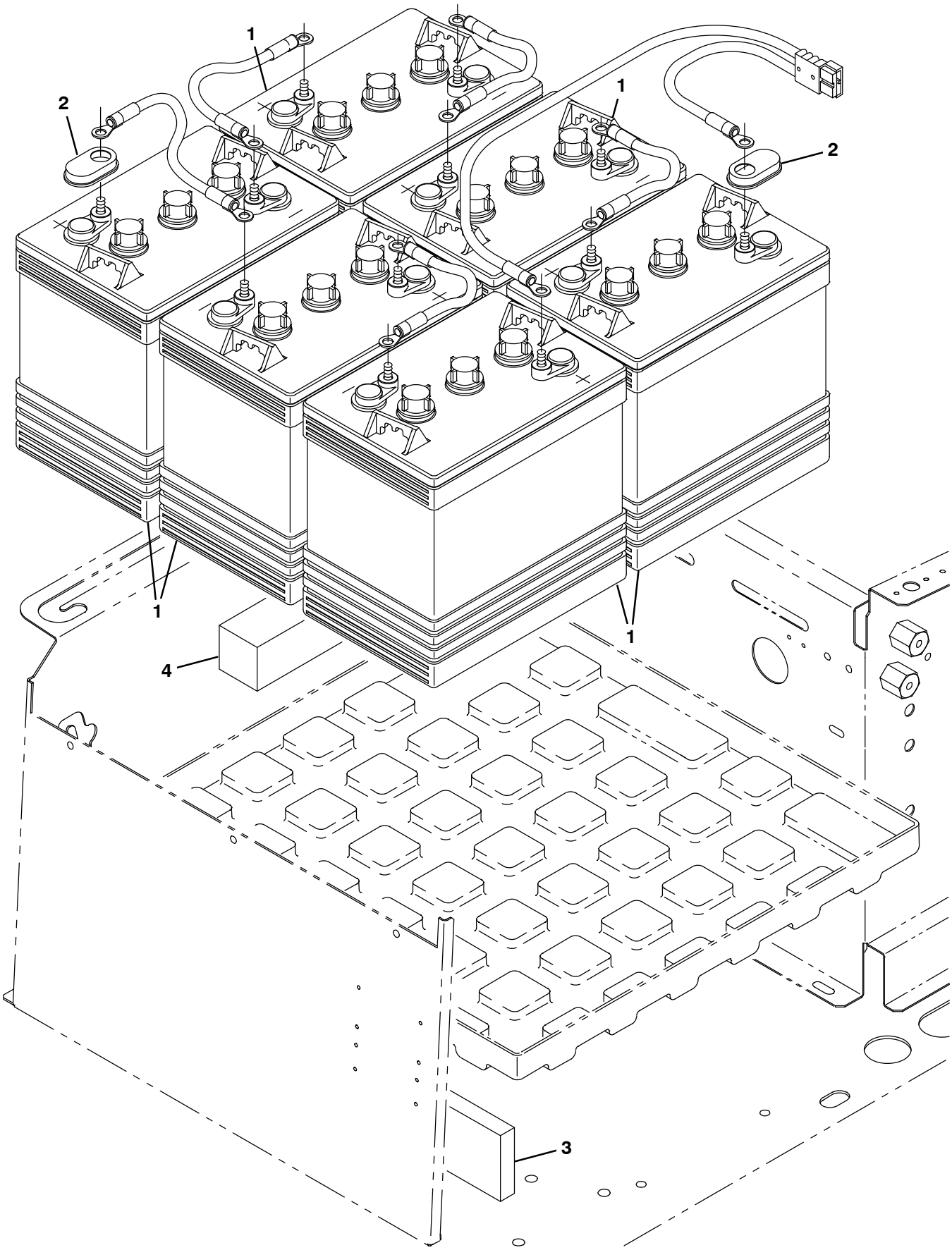

352193 – E, NA, JP

Fig. 17 – Battery Kit, Wet, 36Vdc 220AH

	Ref.	Part No.	Serial Number	Description	Qty.
▽		83255	(000000–)	Battery Kit, 36V 220Ah Dry	1
▲	1	10155	(000000–)	Battery, 6V, Moist/Dry	6
▲	2	1041030	(000000–)	Cap, Battery	12
▲	3	222473	(000000–)	Spacer	1
▲	4	83415	(000000–)	Spacer, Battery 2.0 X 2.0 X 11	1

Fig. 18 – Hydrolink® Battery Watering System Kit

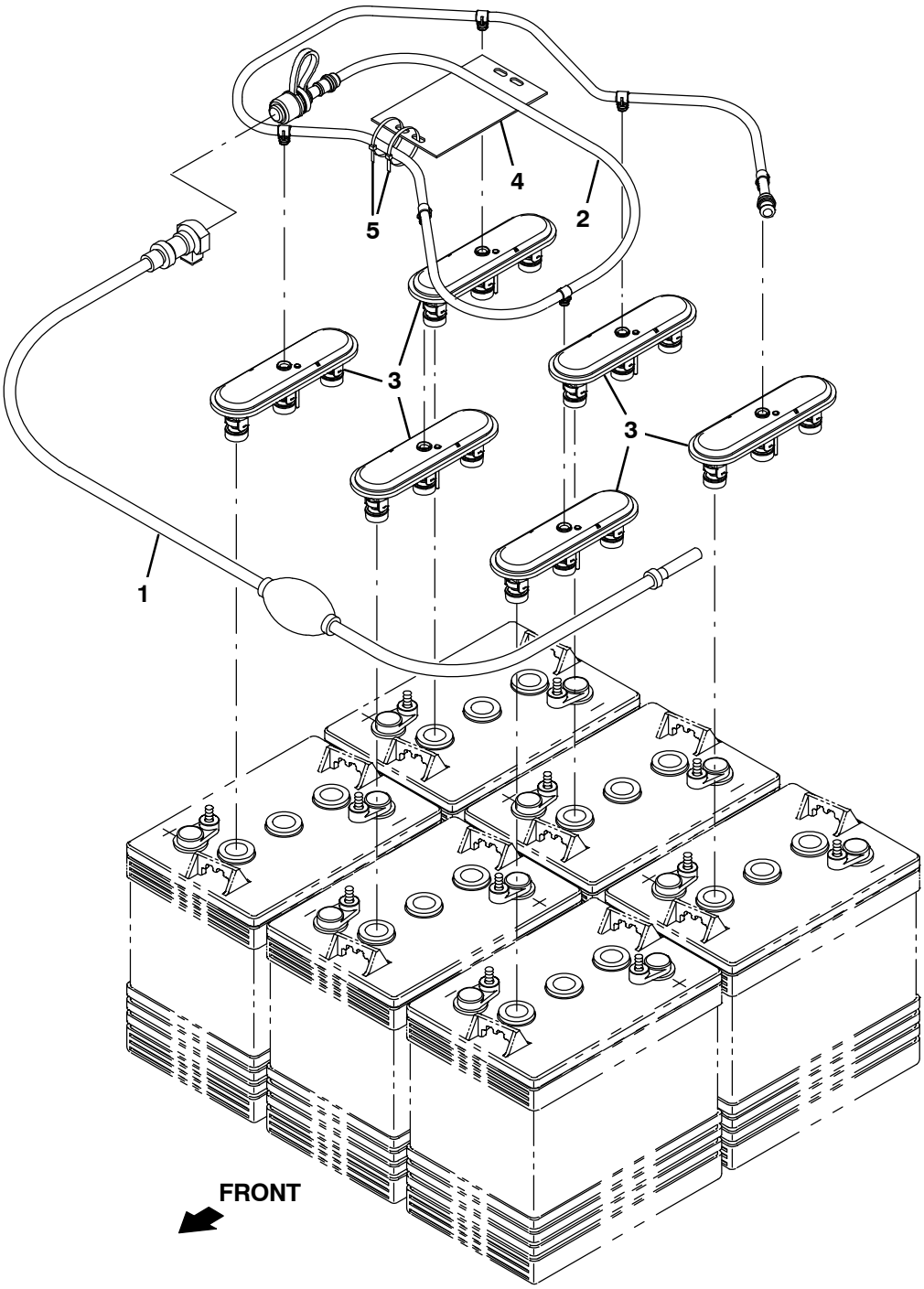

356582

	Ref.	Part No.	Serial Number	Description	Qty.
∇		9010301*	(000000–)	Pump Kit, Fill, Battery,36vdc,Ci[Trojan]	1
▲	1	1058939	(000000–)	Pump Kit, Fill, Battery	1
▲	2	1201997	(000000–)	Tube, Water, Battery, 36vdc [Trojan]	1
▲	3	1204142	(000000–)	Cap, Fill, Battery [Trojan]	6
▲	4	1071084	(000000–)	Label, Tag, Battery [Hydrolink Watering]	1
▲	5	130773	(000000–)	Tie, Cable, Nyl, 11.0l, .14w, 3.0 Max. D	2

*This kit is intended for use with Trojan® Lead Acid Batteries Only.

Hydrolink® is a registered trademark of Trojan® Battery Company.

Fig. 19 – Seat Belt Kit

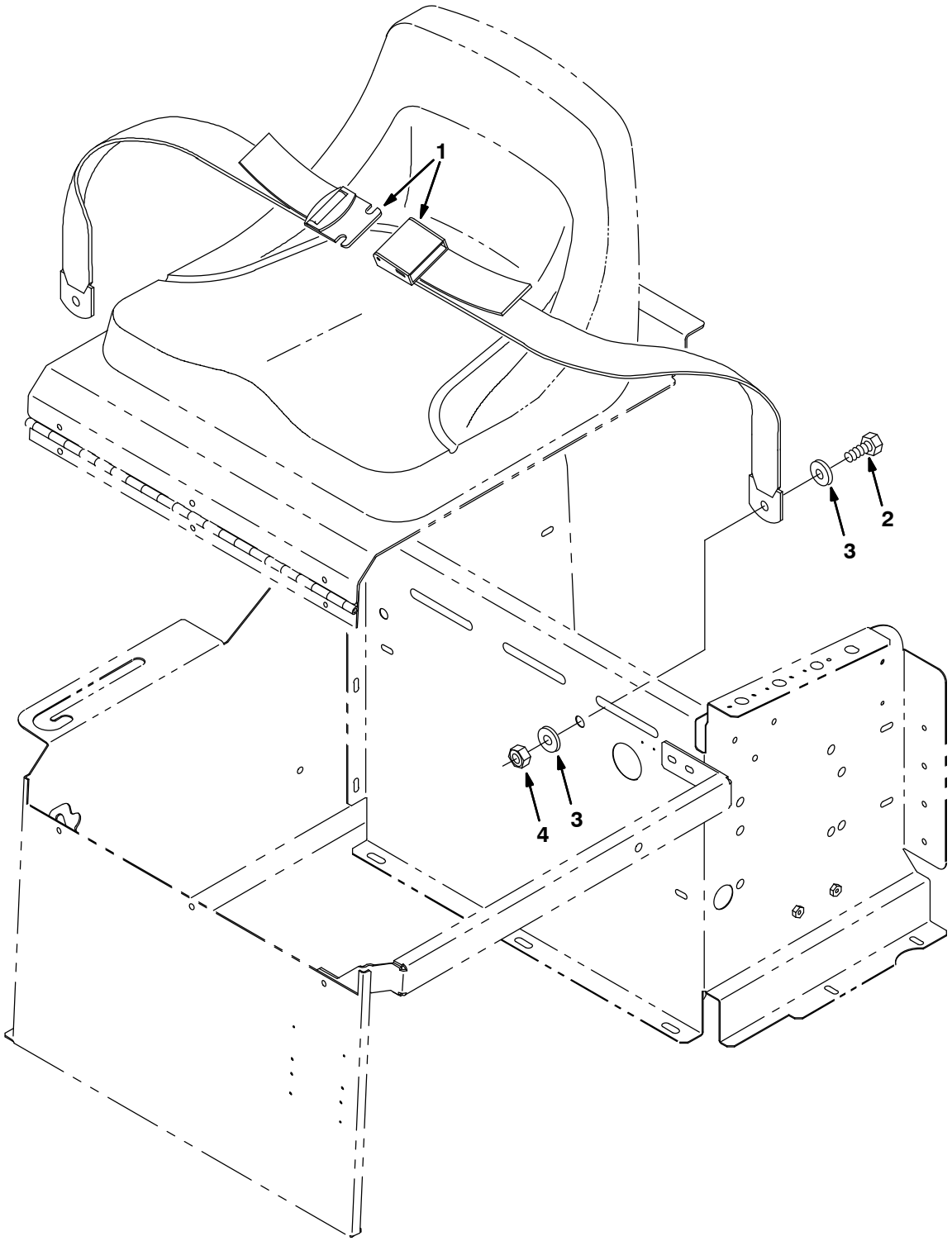

352188 – ALL

	Ref.	Part No.	Serial Number	Description	Qty.
▽		83267	(000000–)	Seatbelt Kit 6100	1
▲	1	30533	(000000–)	Belt, Seat	1
▲	2	41345	(000000–)	Screw, Hex, M12–1.75 X 25, 8.8	2
▲	3	32486	(000000–)	Washer, Flat, .50 Sae	4
▲	4	08711	(000000–)	Nut, Hex, Lock, M12–1.75,NI	2

Fig. 20 - Seat Slide Kit

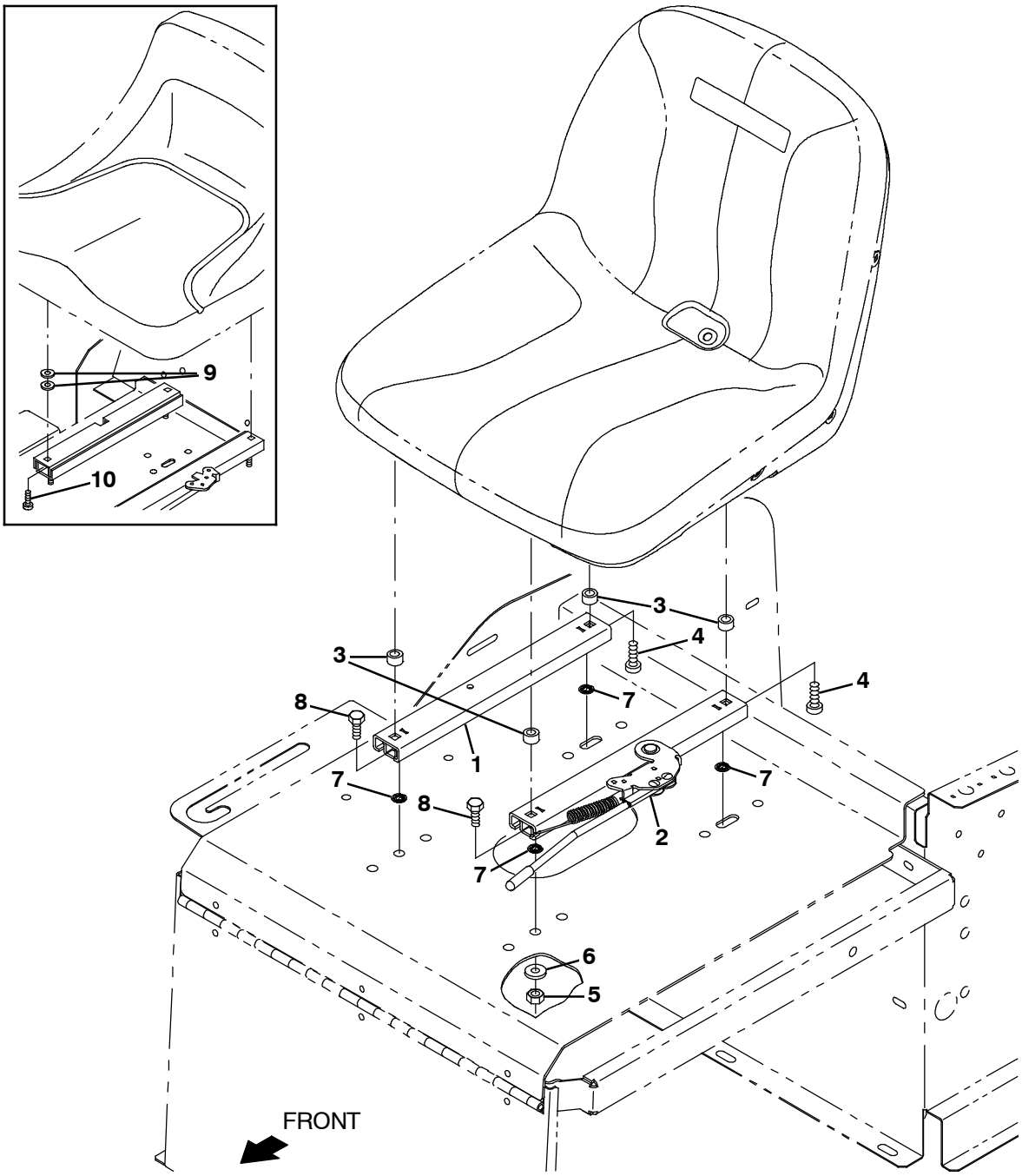

352190 - NA

	Ref.	Part No.	Serial Number	Description	Qty.
▽		83194	(000000-)	Seat Kit, Slides	1
▲	1	1077067	(000000-)	Track, N- Lkg, Seat, 12.5l, No Stud	1
▲	2	1077071	(000000-)	Track, Locking, 12.5l, No Stud W/Handle	1
▲	3	1051052	(004017-)	Spacer, Rnd, .38b .88d .38l	4
▲	4	1073048	(005308-)	Screw, Pan, Phl, .31- 18 x 1.50, G2	4
▲	5	32983	(000000-)	Nut, Hex, Lock, .31- 18, Nl	4
▲	6	32491	(000000-)	Washer, Flat, .31 Hard	4
	7	1077073	(000000-	Nut, Push, Bolt Retention, Stl,5/16 Thrd	4
	8	76955	(000000-	Screw, Hex, .31- 18 X 1.00, G5	4
	9	69461	(000000- 004016)	Washer	8
	10	49177	(000000- 005307)	Screw, Pan, Phl, .31- 18 X 1.00, G2	4

Fig. 21 – Battery Charger Group

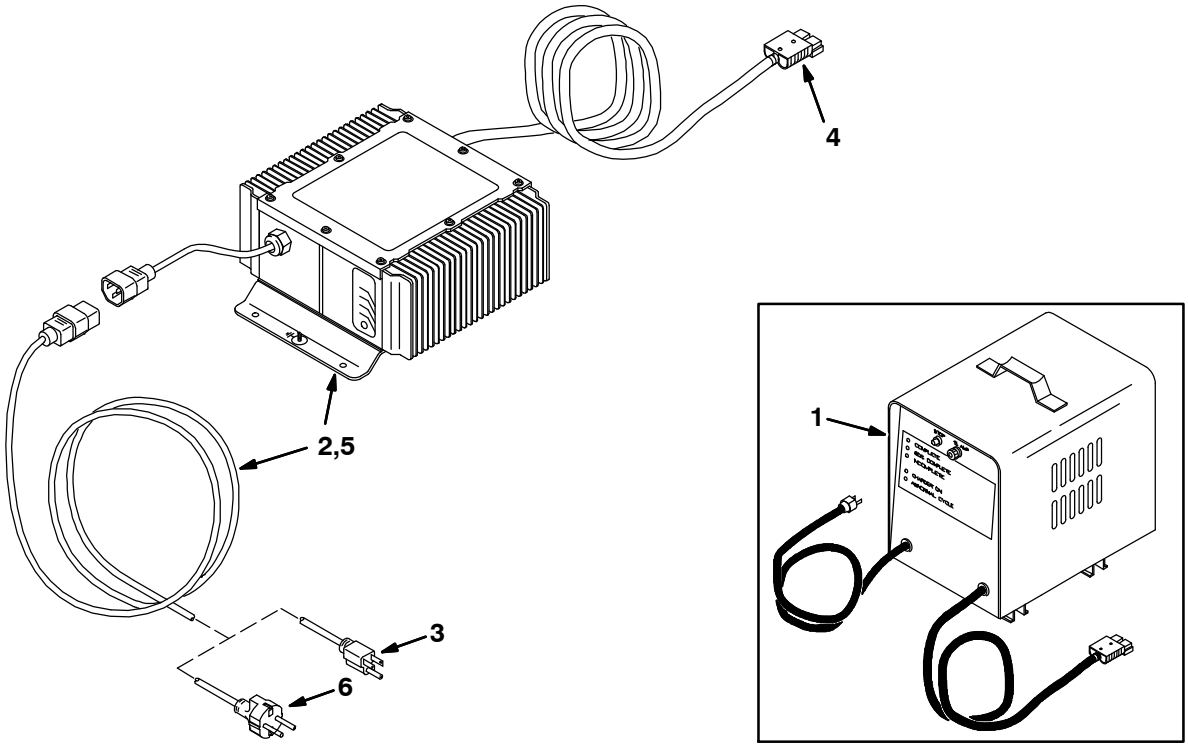

354318, 08080 – E, NA

	Ref.	Part No.	Serial Number	Description	Qty.
	1	374014	(000000– xxxxxx)	Charger, 36V/20A/60Hz/1Ph/115V (See Breakdowns)	1
	1	374015	(000000– xxxxxx)	Charger, 36V/30A/60Hz/1Ph/115V (See Breakdowns)	1
▽		9001055	(xxxxxx–)	Charger Kit, 36vdc 021a, 1ph,Domestic,Ci	1
▲	2	1019180	(xxxxxx–)	Charger, 36vdc 21a 85–265vac 1ph 45/65hz	1
▲	3	1017079	(xxxxxx–)	Cord, Ele, Chrgr [Onboard]	1
▲	4	130155	(xxxxxx–)	Connector, Battery, 6ga 50a, Gray[2cont]	1

International Only

	Ref.	Part No.	Serial Number	Description	Qty.
	1	65540	(000000– xxxxxx)	Charger, 36V, 20A, 50Hz/1Ph/230V (See Breakdowns)	1
	1	65740	(000000– xxxxxx)	Charger, 36V, 20A, 50Hz/1Ph/245V (See Breakdowns)	1
	1	222595	(000000– xxxxxx)	Charger, 36V, 30A, 50Hz/1Ph/230V (See Breakdowns)	1
	1	222691	(000000– xxxxxx)	Charger, 36V, 30A, 50Hz/1Ph/245V (See Breakdowns)	1
▽		9001054	(xxxxxx–)	Charger Kit, 36vdc, Ci[Export/Euro/Asia]	1
▲	4	130155	(xxxxxx–)	Connector, Battery, 6ga 50a, Gray[2cont]	1
▲	5	1019180	(xxxxxx–)	Charger, 36vdc 21a 85–265vac 1ph 45/65h	1
▲	6	1019242	(xxxxxx–)	Cord, Ele, Chrgr [European]	1

Fig. 22 – Battery Charger Group (Japan Only)

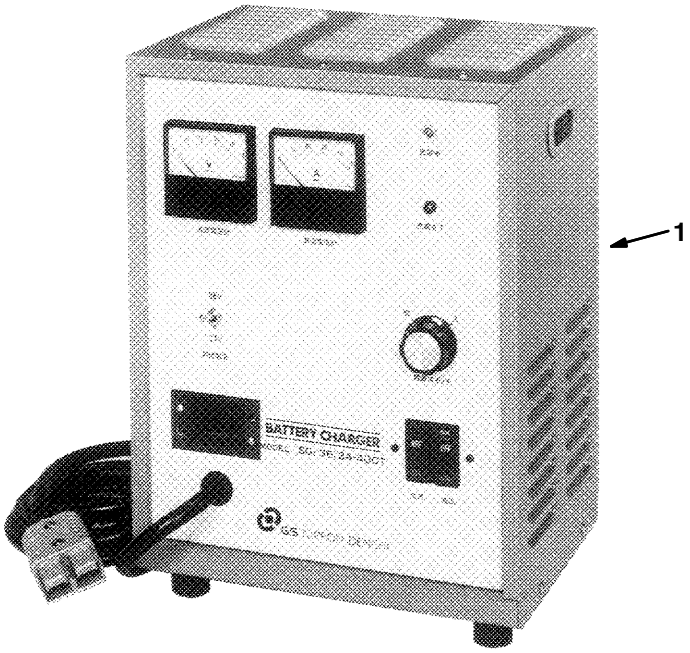

350771 – E, JP

Ref.	Part No.	Serial Number	Description	Qty.
1	989954	(000000–)	Charger, DC36V–25A, AC100V, 50/60Hz	1
2	989959	(000000–)	Charger, DC36V–40A, AC200V, 50/60Hz	1

Fig. 23 – Side Molding Kit

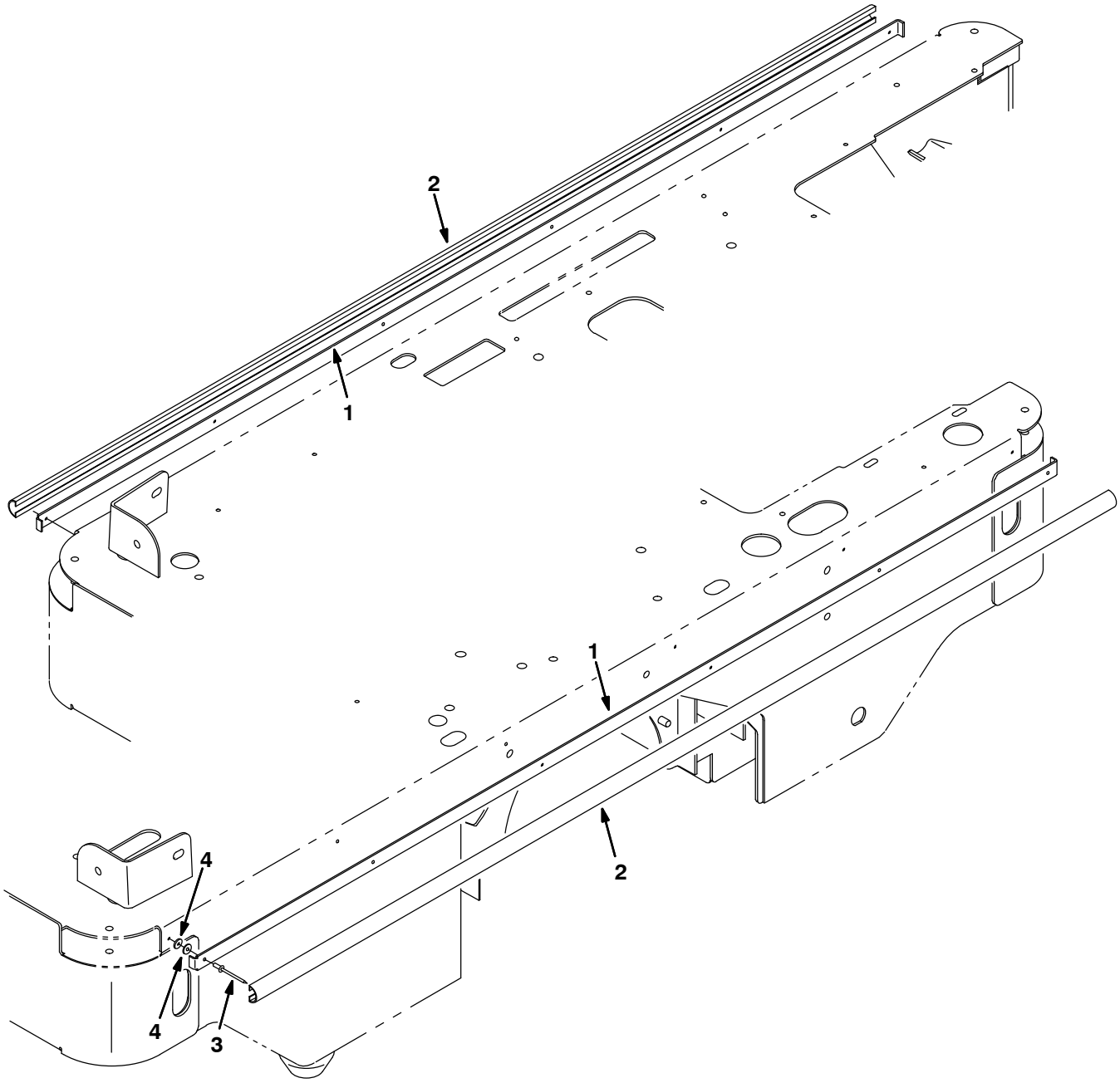

352196 – ALL

	Ref.	Part No.	Serial Number	Description	Qty.
▽		83435	(000000–)	Molding Kit, Side	1
▲	1	83116	(000000–)	Strip, Retainer, Bumper	2
▲	2	81997	(000000–)	Strip, Bumper	2
▲	3	56799	(000000–)	Rivet, Pop	12
▲	4	02892	(000000–)	Washer	24

Fig. 24 – Worklight Kit

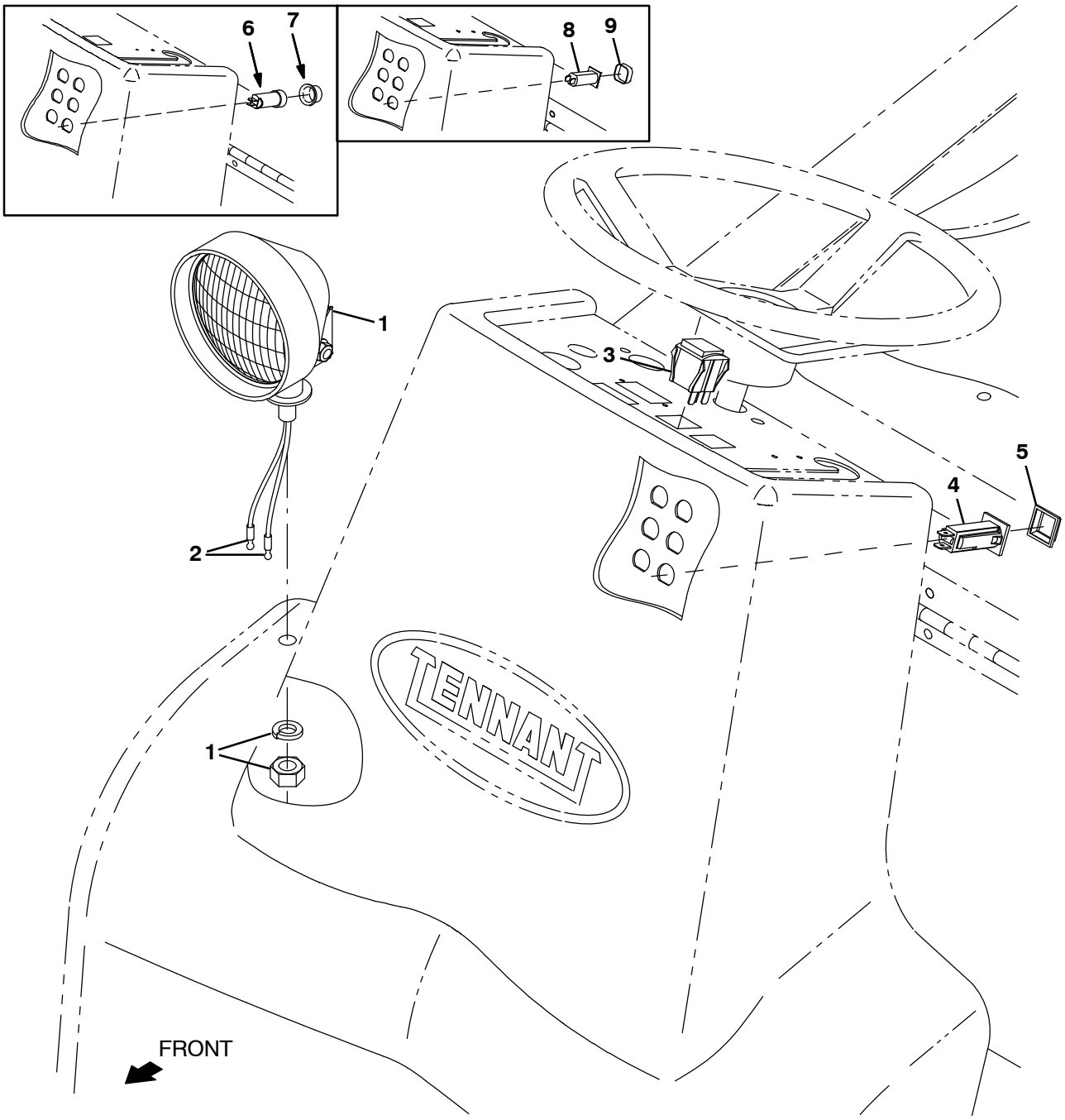

352205 – E, NA, JP

	Ref.	Part No.	Serial Number	Description	Qty.
▽		83203	(000000–)	Worklight Kit, 36V, 6100	1
▲	1	1072011	(000000–)	Light, Led, 36vdc, 4.8d [Sealed Beam]	1
▲	2	55272	(000000–)	Terminal, Bullet, Mal, .157d, 12ga	2
▲	3	360520	(000000–)	Switch, Rocker	1
▲	4	1064858	(004788–)	Circuitbreaker, 15a, Resetable	1
▲	5	1064191	(004788–)	Boot, Circuitbreaker	1
	6	57803	(000000–003984)	Circuitbreaker, 15.0a, Resetable	1
	7	57751	(000000–003984)	Boot, Circuitbreaker	1
	8	1045858	(003985–004787)	Circuitbreaker, 15a, Resetable	1
	9	1046173	(003985–004787)	Boot, Circuitbreaker	1

Fig. 25 – Non–Marking Tire Kit (000000–002362)

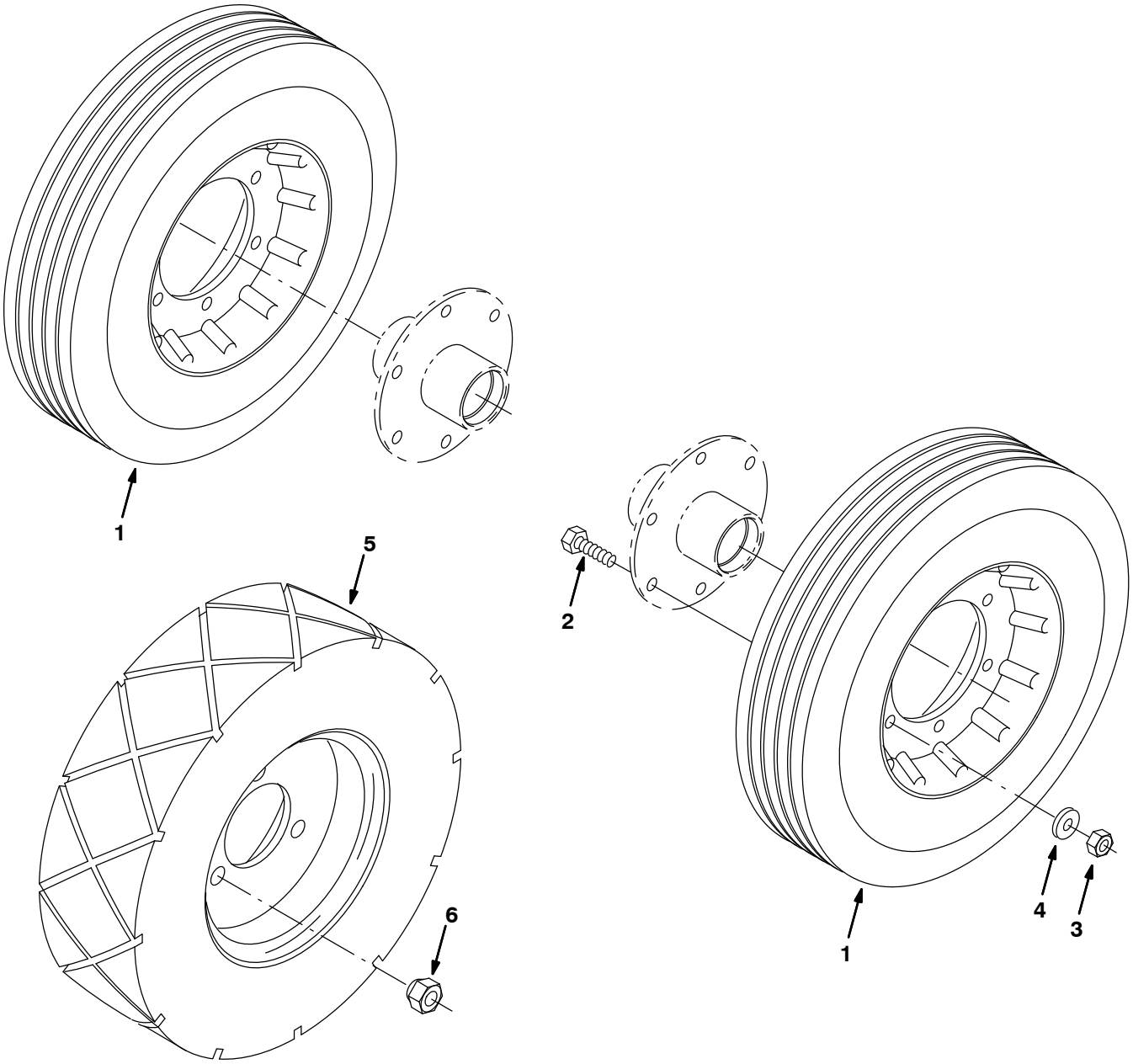

352212 – ALL

	Ref.	Part No.	Serial Number	Description	Qty.
▽		83433	(000000–002362)	Kit, Tire, Non Marking	1
▲	1	1055894	(000000–002362)	Tire Assy, Solid, 12.0 X 3.0 4.3bc 6bolt	2
▲	2	39277	(000000–002362)	Screw, Hex, M08–1.25 X 25, 8.8	6
▲	3	08709	(000000–002362)	Nut, Hex, Lock, M08–1.25,Nl	6
▲	4	39349	(000000–002362)	Washer, Flat, .31 Sae	6
▲	5	385766	(000000–002362)	Tire, Solid, Non Mark 12X3	1
▲	6	11109	(000000–002362)	Nut, Wheel, .44–20 X 60 Angle	3

Fig. 26 – Non–Marking Tire Kit (002363–)

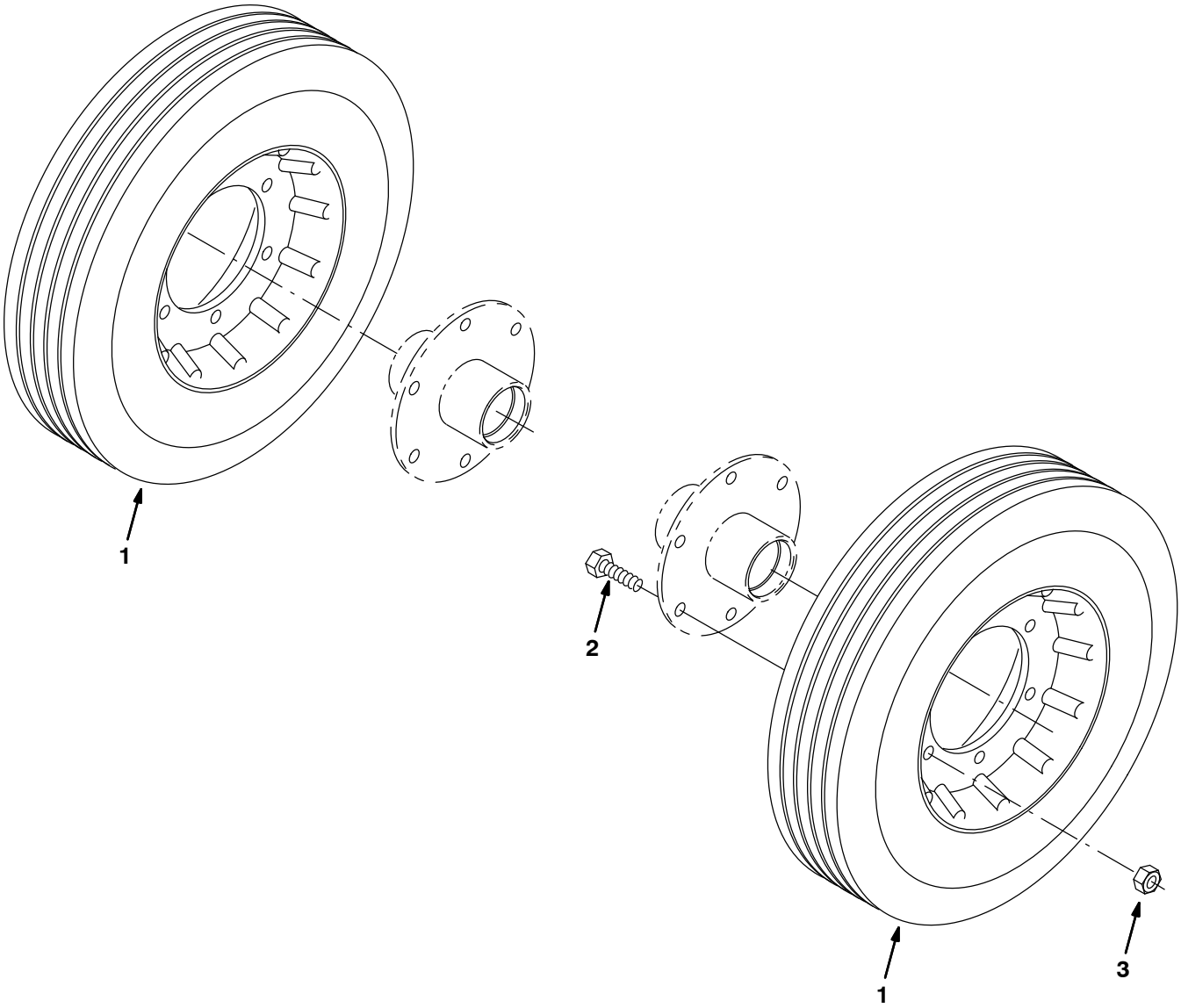

352212 – ALL

	Ref.	Part No.	Serial Number	Description	Qty.
▽		374179	(002363–)	Kit, Ci, Tire, Non Marking	1
▲	1	1055894	(0002363–)	Tire Assy, Solid, 12.0 X 3.0 4.3bc 6bolt	2
▲	2	39277	(002363–)	Screw, Hex, M08–1.25 X 25, 8.8	6
▲	3	08709	(002363–)	Nut, Hex, Lock, M08–1.25,NI	6

Fig. 27 – Fire Extinguisher Kit

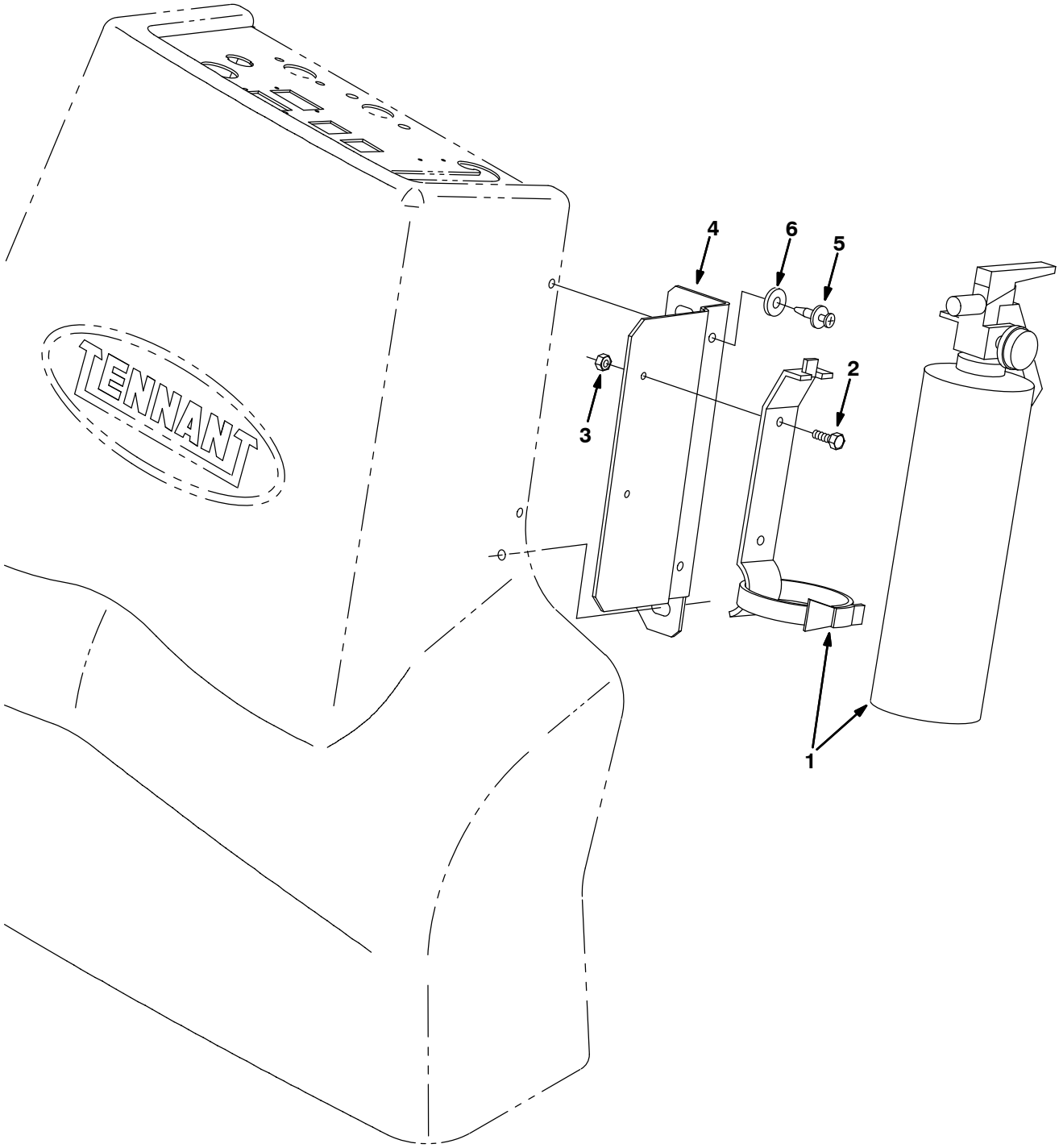

352214 – E, NA, NOB

	Ref.	Part No.	Serial Number	Description	Qty.
▽		83221	(000000–)	Extinguisher Kit, 6100	1
▲	1	25312	(000000–)	Extinguisher, Fire	1
▲	2	12312	(000000–)	Screw, Hex, M05–0.8 X 12, 8.8	2
▲	3	06549	(000000–)	Nut, Hex, Lock, M05–0.8, Nl	2
▲	4	83395	(000000–)	Bracket, Mtg, Fire Extinguishe	1
▲	5	72970	(000000–)	Rivet, Plstc	2
▲	6	32491	(000000–)	Washer, Flat, .31 Hard	2

Fig. 28 – Telemetry Group (005104–)

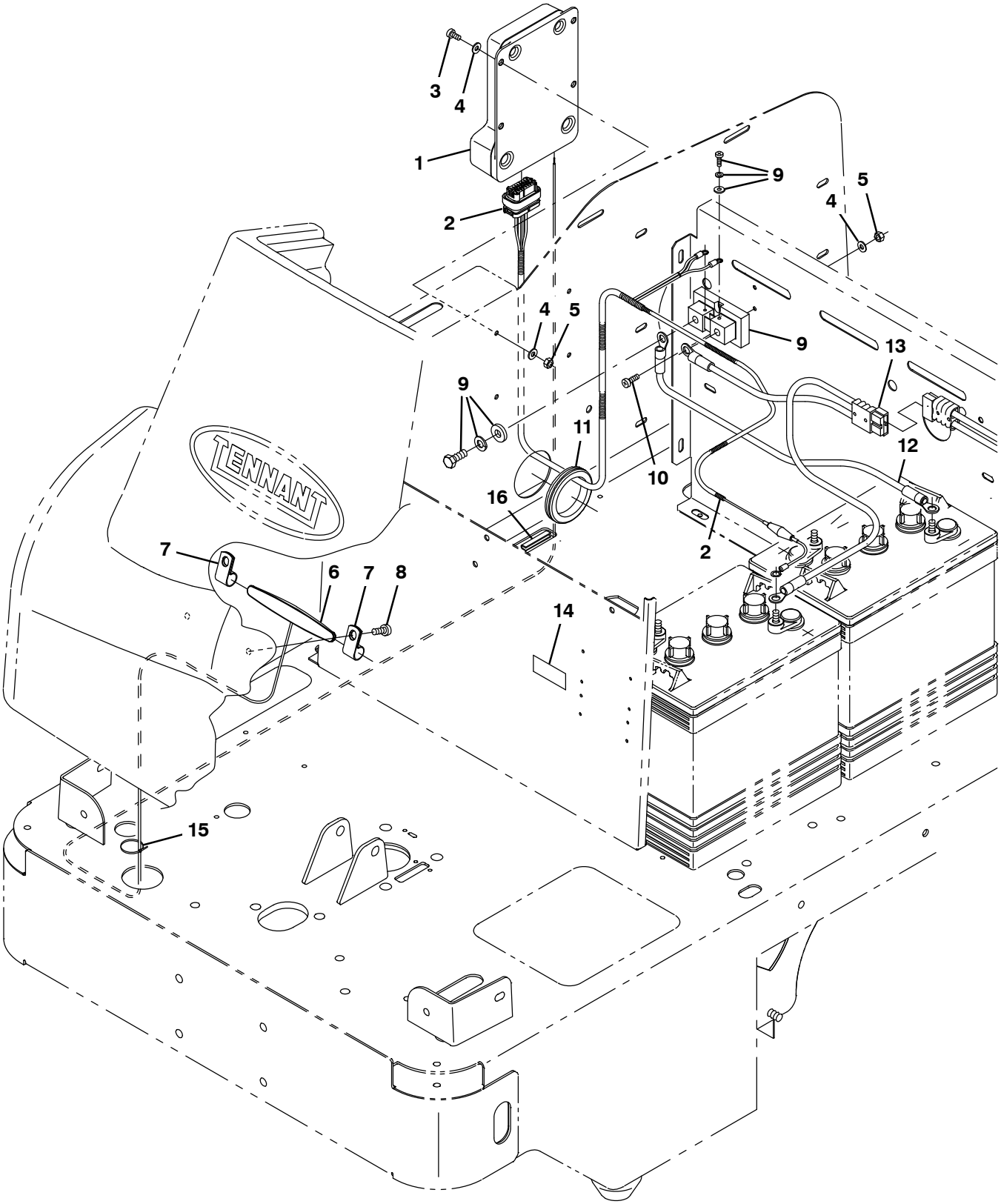

356259 – E, NA

Fig. 28 – Telemetry Group (005104–)

	Ref.	Part No.	Serial Number	Description	Qty.
	1	9010085	(005104–)	Control Box Assy Kit, Replmt, Telem[USA]	1
	1	9010086	(005104–)	Control Box Assy Kit, Replmt, Telem[INTL]	1
▽	2	1070506	(005104–)	Harness, Ele [Telemetry, 6100e]	1
▲		9009990	(005104–)	Fuse, 002A, 250Vdc, Cartridge	1
	3	06933	(005104–)	Screw, Pan, Phl, M5 X 0.80 X 16, 4.8	4
	4	01683	(005104–)	Washer, Flat, 10, Ss	10
	5	06549	(005104–)	Nut, Hex, Lock, M5 X 0.80, Nl	6
	6	1070658	(005104–)	Antenna, Telem, 180 In [Gprs]	1
	7	140916	(005104–)	Clamp, Cable, Nyl, 0.62d, Nat	2
	8	360973	(005104–)	Screw, Pan, 12–16 X 0.50, F/ Plstc	2
	9	1070384	(005104–)	Shunt, 050mv 250a	1
	10	06934	(005104–)	Screw, Pan, Phl, M5 X 0.80 X 20, 4.8	2
	11	10632–19	(005104–)	Grommet, Rbr, 2.13id, F/2.5h, .12 Matl	1
	12	1070509	(005104–)	Cable, 6ga, Blk [6100e, Telemetry]	1
	13	1070508	(005104–)	Cable Assy, 6ga [6100e – Telemetry]	1
	14	1069580	(005104–)	Label, Opertnl, Telem [Fcc/Ic]	1
	15	49266	(005104–)	Tie, Cable, Nyl, 07.3l .19w 1.8 Max D	3
	16	1020168	(005104–)	Molding, Afmkt, Trim, Pvc, .08 .11, 01ft	1

Fig. 29 – Heavy Duty Controller Kit (000000–002014)

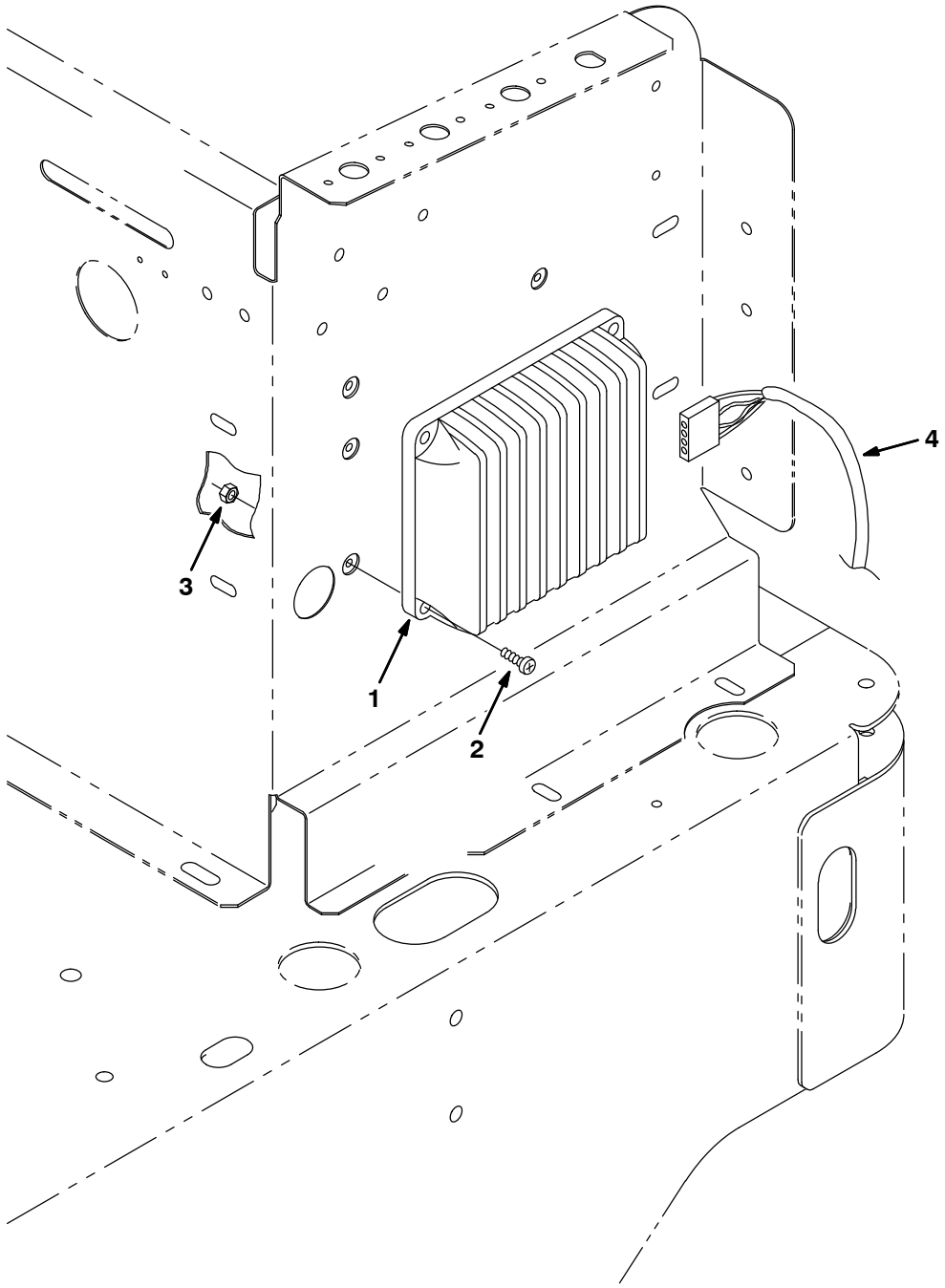

352203 – E, NA

	Ref.	Part No.	Serial Number	Description	Qty.
▽		83188	(000000–002014)	Controller Kit, Heavy Duty	1
▲	1	384462	(000000–002014)	Controller, Propel, 36Vdc, 90 Amp	1
▲	2	06927	(000000–002014)	Screw, Pan, M04–0.7 X 16, 4.8	4
▲	3	02850	(000000–002014)	Nut, Hex, Lock, M04–0.7, NI	4
▲	4	81932	(000000–002014)	Harness, Wire, Controller	1

Fig. 30 – Electrical Schematic, Heavy Duty Controller

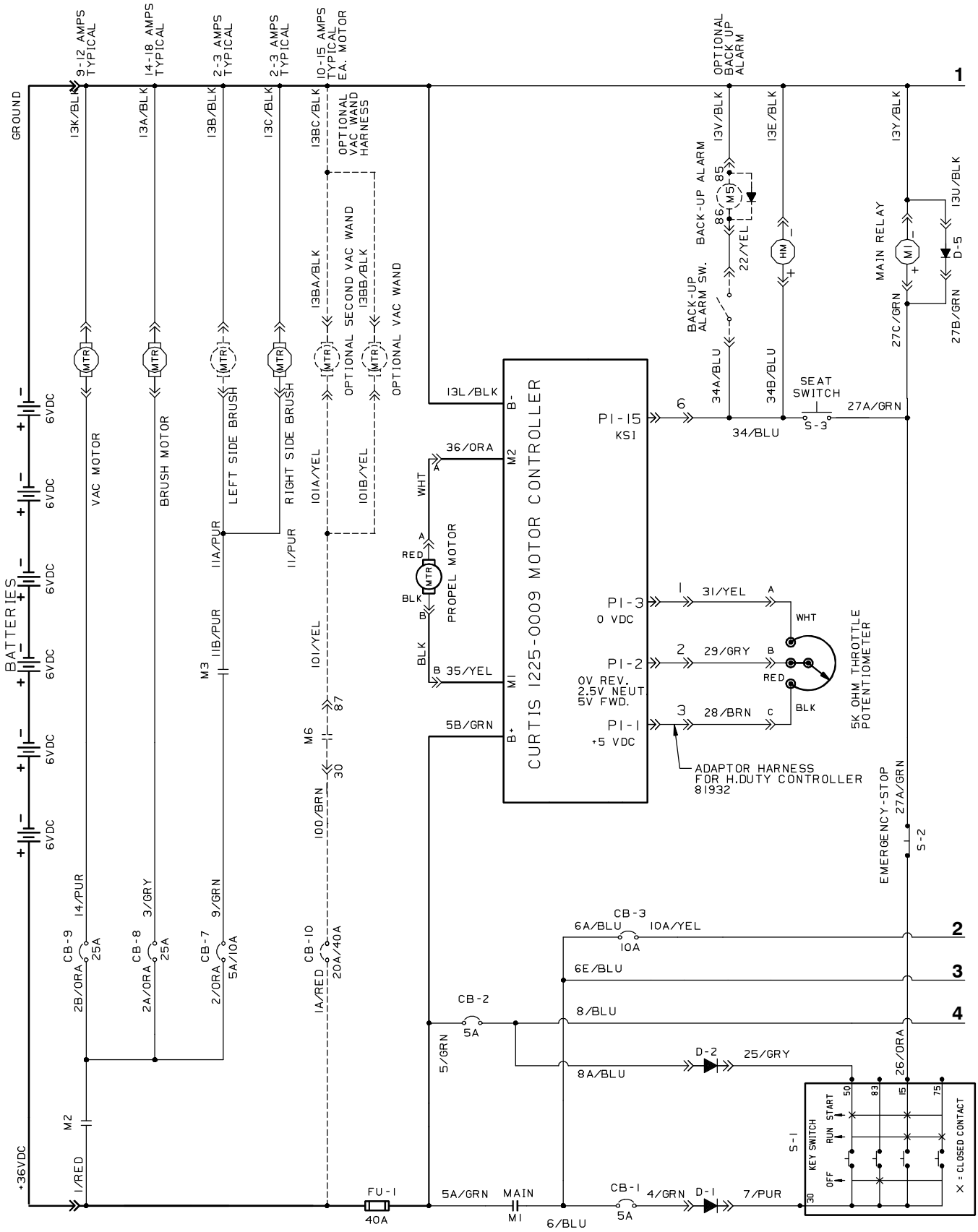

Fig. 30 – Electrical Schematic, Heavy Duty Controller

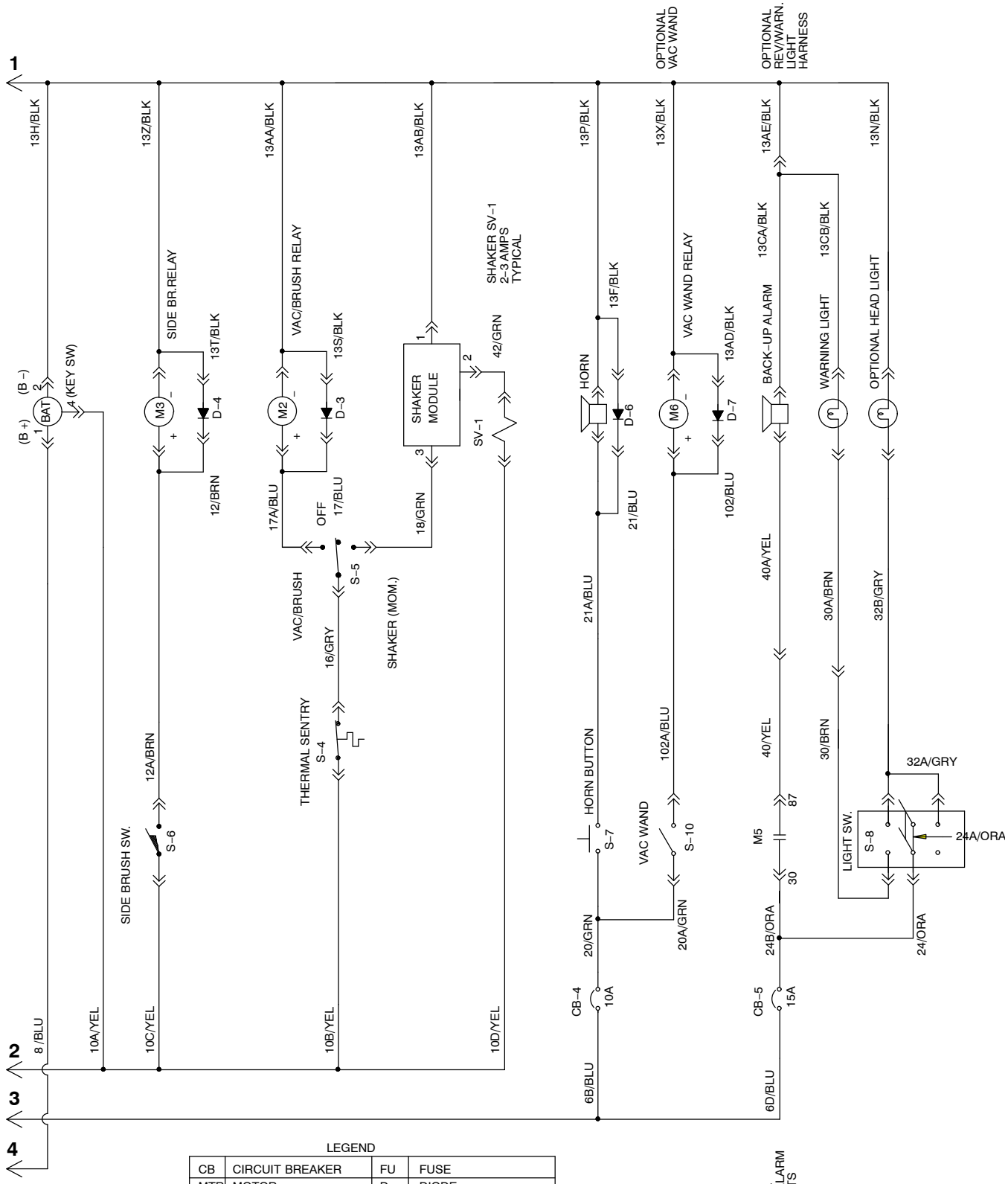

LEGEND

CB	CIRCUIT BREAKER	FU	FUSE
MTR	MOTOR	D	DIODE
P	CONNECTOR PIN	M	RELAY COIL
S	SWITCH	R	RESISTOR
ARM	ARMATURE	HM	HOURMETER
BAT	BATTERY GAUGE		

83025, 354368

Fig. 31 – Documentation Group (Online Only)

07501 – E, NA

Ref.	Part No.	Serial Number	Description	Qty.
	9014885	(000000–)	Manual, Parts [6100 Na/Intl]	1
	330250	(000000–)	Manual, Operator [6100 Ele, Na]	1
	330254	(000000–)	Manual, Operator [6100 Ele, Jp]	1
	613787	(000000–)	Instr, Mach, Wall Chart [6100]	1
	330255	(000000–)	Manual, Service, 6100E	1
	330252	(000000–)	Manual, Oprtr, 6100E Es Na	1
	330253	(000000–)	Manual, Oprtr, 6100E Fr Na	1
	83122	(000000–)	Instr, Mach, Use And Care [6100]	1

To view, print, or download the latest Parts manual, other language Operator manuals, and Use and Care Guides (wall charts), visit:

www.tennantco.com/manual

SECTION 4

Contents **Page**

Fig. 1 – Electric Motor Breakdown, 17363 4-2
Fig. 2 – Electric Motor Breakdown, 398520 4-4
Fig. 3 – Electric Motor Breakdown, 222409 4-6
Fig. 4 – Electric Motor Breakdown, 374201 4-7
Fig. 5 – Electric Motor Breakdown, 81940 4-8
Fig. 6 – Electric Motor Breakdown, 374266 4-9
Fig. 7 – Electric Motor Breakdown, 81941 4-10
Fig. 8 – Electric Motor Breakdown, 374268 4-11
Fig. 9 – Battery Charger Breakdown, 60 Hz, 115V, 374014 4-12
Fig. 10 – Battery Charger Breakdown, 60 Hz, 115V, 374015 4-13
Fig. 11 – Battery Charger Breakdown, 50 Hz, 230V, 65540 4-14
Fig. 12 – Battery Charger Breakdown, 50 Hz, 245V, 65740 4-15
Fig. 13 – Battery Charger Breakdown, 50 Hz,230V, 222595 4-16
Fig. 14 – Battery Charger Breakdown, 50 Hz, 245V, 222691 4-17
Fig. 15 – Front Wheel Gearbox Breakdown, 390851 4-18
Fig. 16 – Front Wheel Gearbox Breakdown, 374346 4-19
Fig. 17 – Electric Motor Breakdown, 1053284 . 4–20
Fig. 18 – Electric Motor Breakdown, 1055614 . 4–21

Fig. 1 – Electric Motor Breakdown, 17363

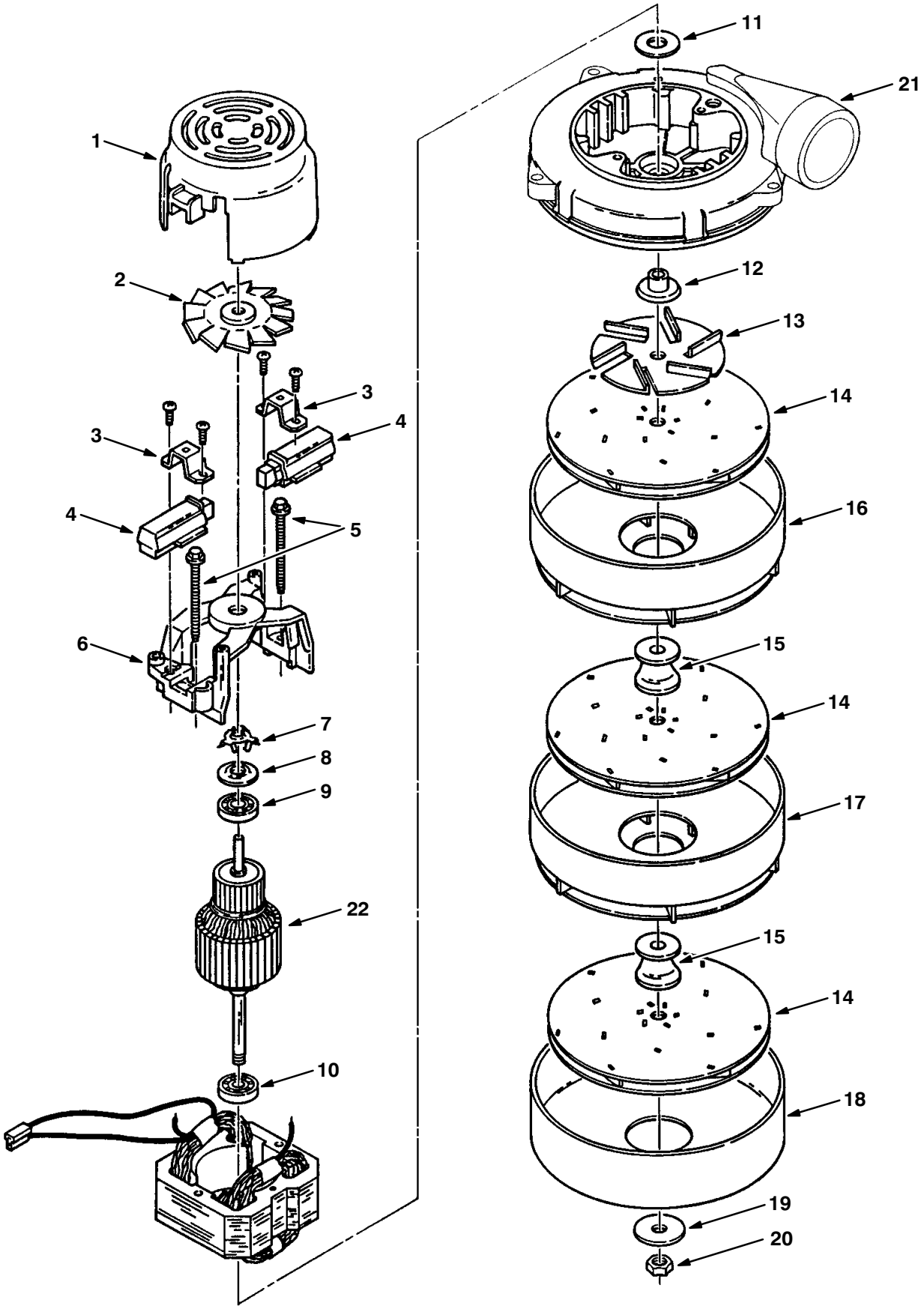

06867–E

Fig. 1 – Electric Motor Breakdown, 17363

	Ref.	Part No.	Serial Number	Description	Qty.
▽		17363	(000000–)	Fan, Vacuum	1
▲	1	37926	(000000–)	Housing	1
▲	2	61298	(000000–)	Fan	1
▲	3	01982	(000000–)	Clamp	2
▲	4	11756	(000000–)	Brush Mechanism	2
▲	5	01969	(000000–)	Screw	2
▲	6	01983	(000000–)	Comm. Bracket	1
▲	7	01856	(000000–)	Spring	1
▲	8	37909	(000000–)	Disc	1
▲	9	01842	(000000–)	Bearing	1
▲	10	01837	(000000–)	Bearing	1
▲	11	37912	(000000–)	Washer, Neo.	1
▲	12	18627	(000000–)	Spacer	1
▲	13	01971	(000000–)	Fan	1
▲	14	18628	(000000–)	Vacuum Fan	3
▲	15	18630	(000000–)	Spacer	2
▲	16	61300	(000000–)	Stationary Fan	1
▲	17	61297	(000000–)	Stationary Fan	1
▲	18	18631	(000000–)	Shell	1
▲	19	378983	(000000–)	Washer	1
▲	20	37929	(000000–)	Nut	1
▲	21	60386	(000000–)	Bracket, Fan End	1
▲	22	21765	(000000–)	Armature	1
▲		223264	(000000–)	Seal, Fan	1
▲		10925	(000000–)	Connector, 2 Conductor	1
▲		10926	(000000–)	Terminal, Female	2

Fig. 2 – Electric Motor Breakdown, 398520

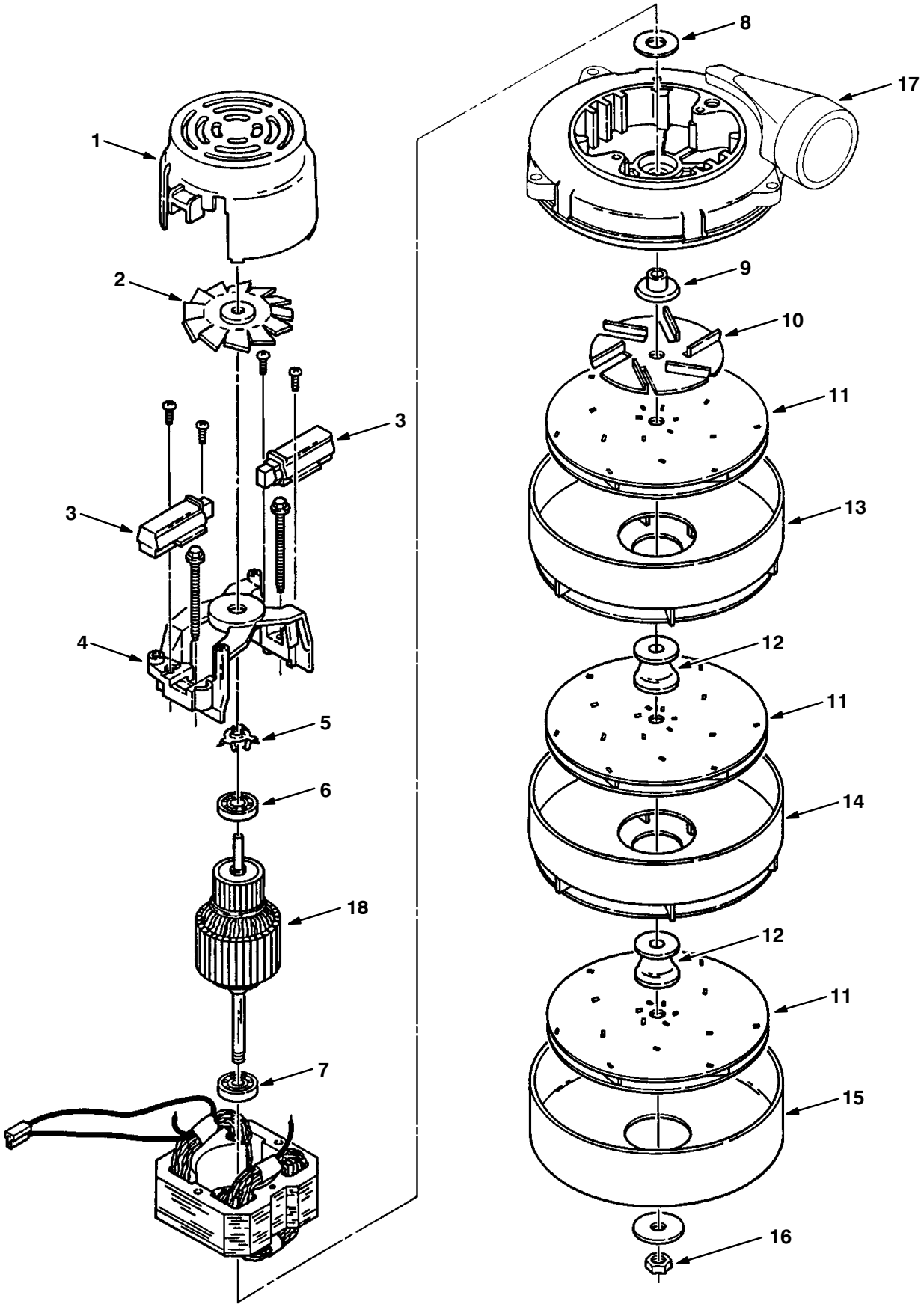

06867 – E

Fig. 2 – Electric Motor Breakdown, 398520

	Ref.	Part No.	Serial Number	Description	Qty.
▽		398520	(000000–)	Fan, Vacuum	1
▲	1	398511	(000000–)	Housing	1
▲	2	398512	(000000–)	Fan	1
▲	3	398513	(000000–)	Brush Mechanism	2
▲	4	398514	(000000–)	Comm. Bracket	1
▲	5	01856	(000000–)	Spring	1
▲	6	398515	(000000–)	Bearing	1
▲	7	01837	(000000–)	Bearing	1
▲	8	37912	(000000–)	Washer, Neo.	1
▲	9	398516	(000000–)	Spacer	1
▲	10	01971	(000000–)	Fan	1
▲	11	18628	(000000–)	Vacuum Fan	3
▲	12	398517	(000000–)	Spacer	2
▲	13	61300	(000000–)	Stationary Fan	1
▲	14	61297	(000000–)	Stationary Fan	1
▲	15	398518	(000000–)	Shell	1
▲	16	37929	(000000–)	Nut	1
▲	17	60386	(000000–)	Bracket, Fan End	1
▲	18	398519	(000000–)	Armature	1
▲		223264	(000000–)	Seal, Fan	1
▲		10925	(000000–)	Connector, 2 Conductor	1
▲		10926	(000000–)	Terminal, Female	2

Fig. 3 – Electric Motor Breakdown, 222409

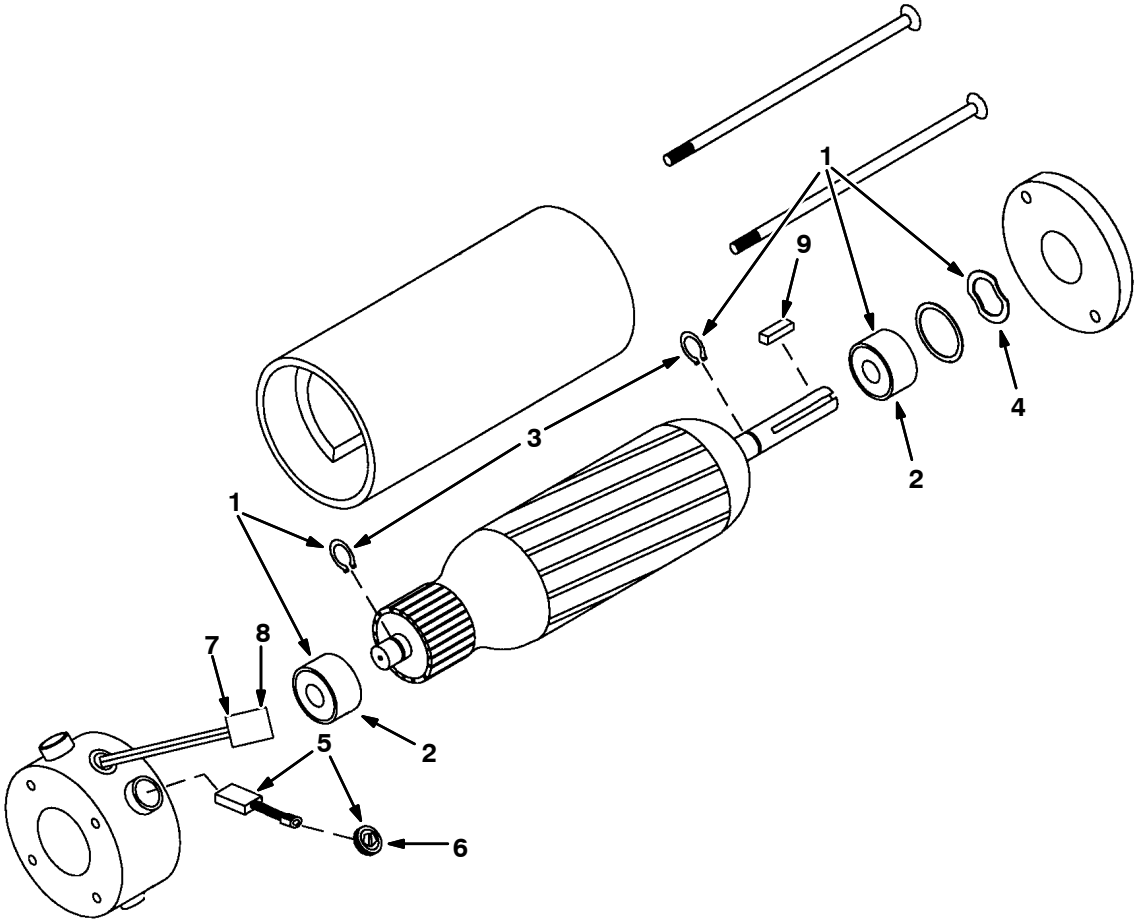

10426–E

	Ref.	Part No.	Serial Number	Description	Qty.
▽		222409	(000000–)	Motor, Ele, 36vdc, Rep By 374201	1
▲▽	1	222623	(000000–)	Kit, Bearing, Motor, Ele [Magnetek]	1
▲▲	2	222635	(000000–)	Bearing, Motor, Ele [Magnetek]	2
▲▲	3	222637	(000000–)	Ring, Snap, Motor, Ele [Magnetek]	2
▲▲	4	222638	(000000–)	Washer, Wavy, Motor, Ele [Magnetek]	1
▲▽	5	222625	(000000–)	Kit, Brush, Motor, Ele [Magnetek]	1
▲▲	6	222629	(000000–)	Cap, Brush Holder, Motor, Ele[Magnetek]	4
▲	7	10925	(000000–)	Connector, Fem, 2cav [Mp630 Sealed]	1
▲	8	24537	(000000–)	Terminal, Fem, 10/12ga [Mp630 P2s]	2
▲	9	00912	(000000–)	Key, Sq, 0.19 X 0.19, 1.00l	1

Fig. 4 – Electric Motor Breakdown, 374201

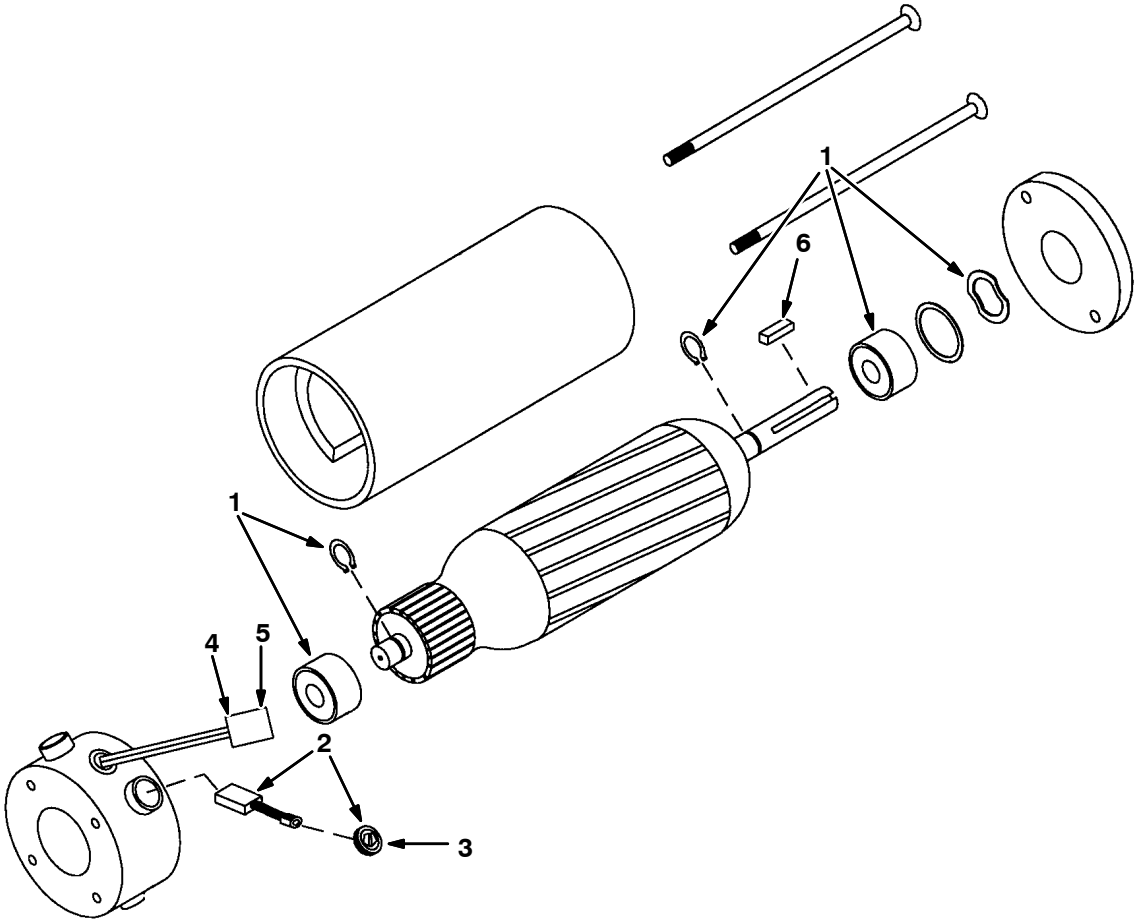

10426–E

	Ref.	Part No.	Serial Number	Description	Qty.
▽		374201	(000000–)	Motor, Ele, 36vdc 0.75hp 2500rpm . A	1
▲	1	375176	(000000–)	Kit, Bearing, Motor, Ele, Hd [F/375175]	1
▲▽	2	222625	(000000–)	Kit, Brush, Motor, Ele [Magnetek]	1
▲▲	3	222629	(000000–)	Cap, Brush Holder, Motor, Ele[Magnetek]	4
▲	4	10925	(000000–)	Connector, Fem, 2cav [Mp630 Sealed]	1
▲	5	24537	(000000–)	Terminal, Fem, 10/12ga [Mp630 P2s]	2
▲	6	00912	(000000–)	Key, Sq, 0.19 X 0.19, 1.00l	1

Fig. 5 – Electric Motor Breakdown, 81940

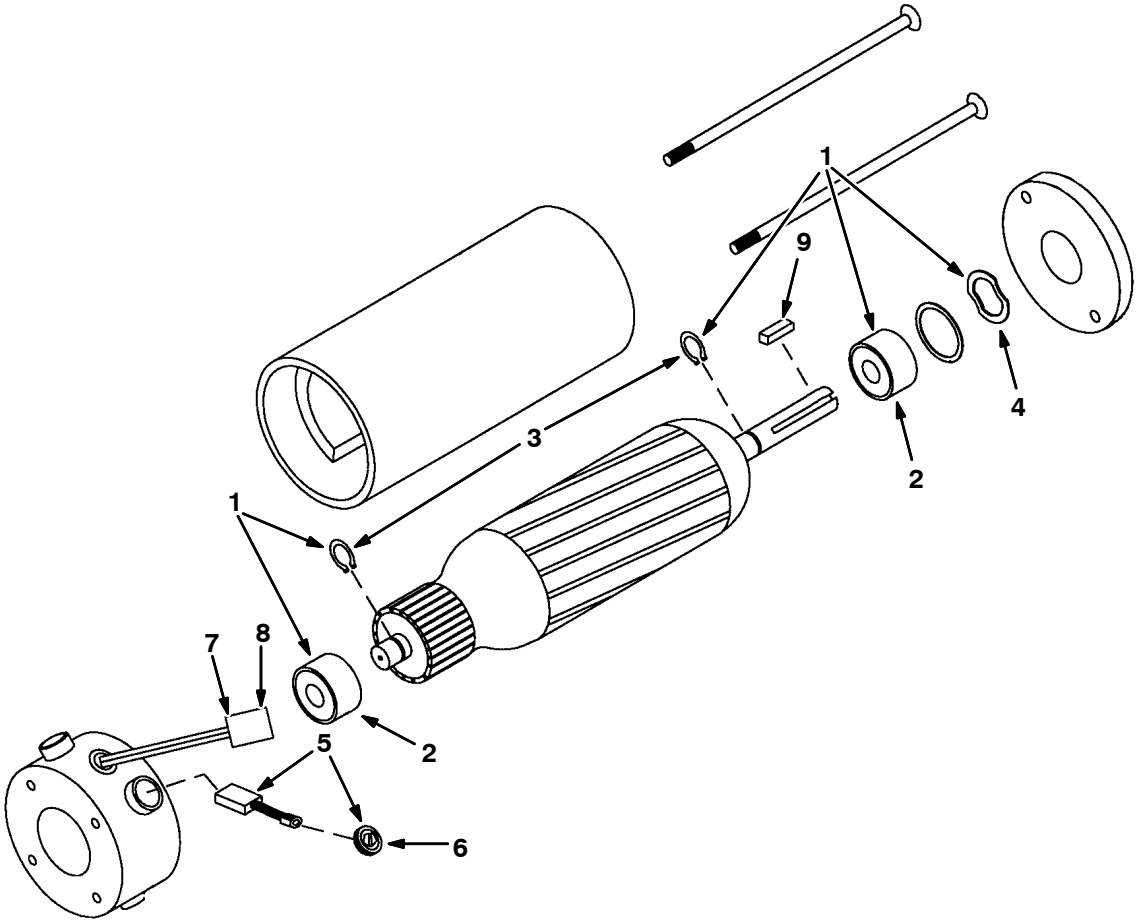

10426–E

	Ref.	Part No.	Serial Number	Description	Qty.
▽		81940	(000000–)	Motor, Ele, 36vdc 0.60hp 1800rpm . A	1
▲▽	1	222623	(000000–)	Kit, Bearing, Motor, Ele [Magnetek]	1
▲▲	2	222635	(000000–)	Bearing, Motor, Ele [Magnetek]	2
▲▲	3	222637	(000000–)	Ring, Snap, Motor, Ele [Magnetek]	2
▲▲	4	222638	(000000–)	Washer, Wavy, Motor, Ele [Magnetek]	1
▲▽	5	222625	(000000–)	Kit, Brush, Motor, Ele [Magnetek]	1
▲▲	6	222629	(000000–)	Cap, Brush Holder, Motor, Ele[Magnetek]	4
▲	7	10925	(000000–)	Connector, Fem, 2cav [Mp630 Sealed]	1
▲	8	24537	(000000–)	Terminal, Fem, 10/12ga [Mp630 P2s]	2
▲	9	00916	(000000–)	Key, Sq, 0.19 X 0.19, 1.50l	1

Fig. 6 – Electric Motor Breakdown, 374266

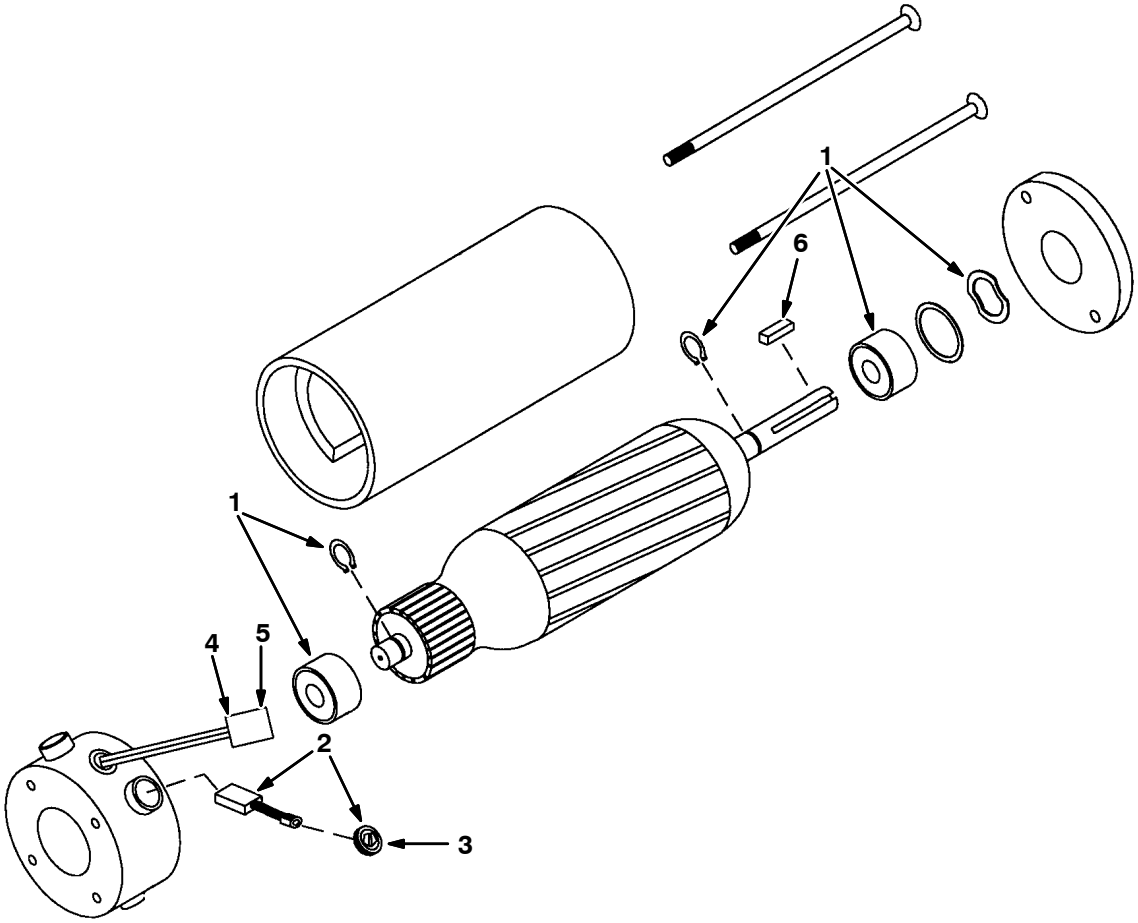

10426–E

	Ref.	Part No.	Serial Number	Description	Qty.
▽		374266	(000000–)	Motor, Ele, 36vdc 0.60hp 1800rpm	1
▲	1	374273	(000000–)	Bearing Kit, Motor, Ele	1
▲▽	2	222625	(000000–)	Kit, Brush, Motor, Ele [Magnetek]	1
▲▲	3	222629	(000000–)	Cap, Brush Holder, Motor, Ele[Magnetek]	4
▲	4	10925	(000000–)	Connector, Fem, 2cav [Mp630 Sealed]	1
▲	5	24537	(000000–)	Terminal, Fem, 10/12ga [Mp630 P2s]	2
▲	6	00916	(000000–)	Key, Sq, 0.19 X 0.19, 1.50l	1

Fig. 7 – Electric Motor Breakdown, 81941

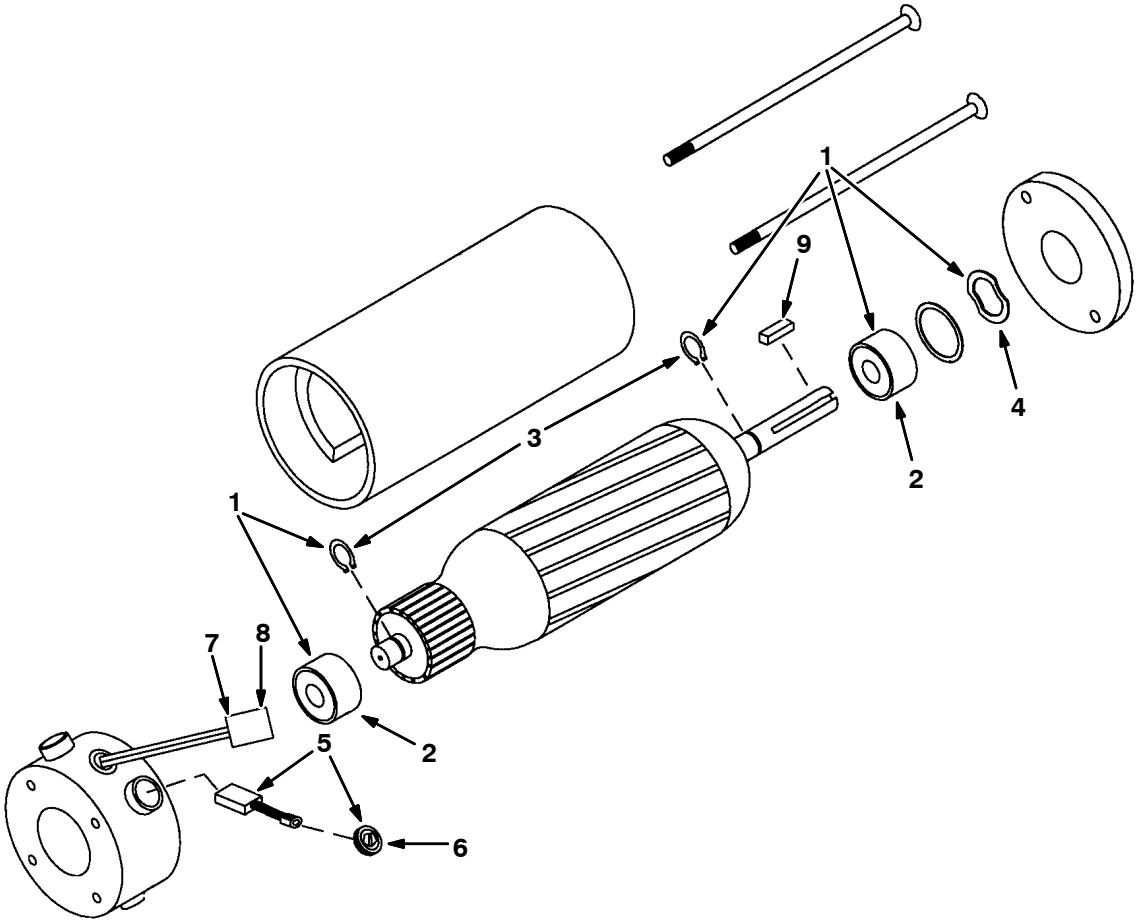

10426–E

	Ref.	Part No.	Serial Number	Description	Qty.
▽		81941	(000000–)	Motor, Ele, 36vdc 0.75hp 2500rpm . A	1
▲▽	1	222623	(000000–)	Kit, Bearing, Motor, Ele [Magnetek]	1
▲▲	2	222635	(000000–)	Bearing, Motor, Ele [Magnetek]	2
▲▲	3	222637	(000000–)	Ring, Snap, Motor, Ele [Magnetek]	2
▲▲	4	222638	(000000–)	Washer, Wavy, Motor, Ele [Magnetek]	1
▲▽	5	222625	(000000–)	Kit, Brush, Motor, Ele [Magnetek]	1
▲▲	6	222629	(000000–)	Cap, Brush Holder, Motor, Ele[Magnetek]	4
▲	7	10925	(000000–)	Connector, Fem, 2cav [Mp630 Sealed]	1
▲	8	24537	(000000–)	Terminal, Fem, 10/12ga [Mp630 P2s]	2
▲	9	00916	(000000–)	Key, Sq, 0.19 X 0.19, 1.50l	1

Fig. 8 – Electric Motor Breakdown, 374268

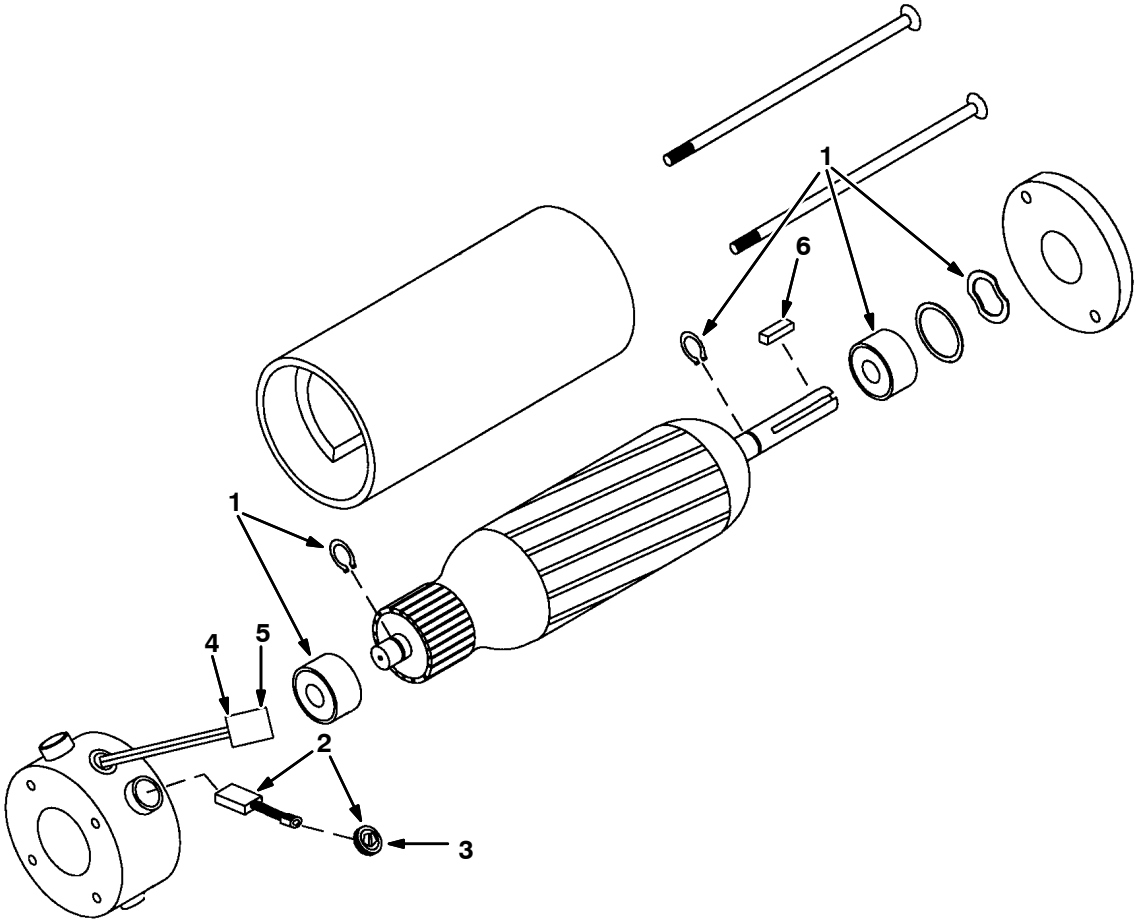

10426–E

	Ref.	Part No.	Serial Number	Description	Qty.
▽		374268	(000000–)	Motor, Ele, 36vdc 0.75hp 2500rpm	1
▲	1	374273	(000000–)	Bearing Kit, Motor, Ele	1
▲▽	2	222625	(000000–)	Kit, Brush, Motor, Ele [Magnetek]	1
▲▲	3	222629	(000000–)	Cap, Brush Holder, Motor, Ele[Magnetek]	4
▲	4	10925	(000000–)	Connector, Fem, 2cav [Mp630 Sealed]	1
▲	5	24537	(000000–)	Terminal, Fem, 10/12ga [Mp630 P2s]	2
▲	6	00916	(000000–)	Key, Sq, 0.19 X 0.19, 1.50l	1

Fig. 9 – Battery Charger Breakdown, 60 Hz, 115V, 374014

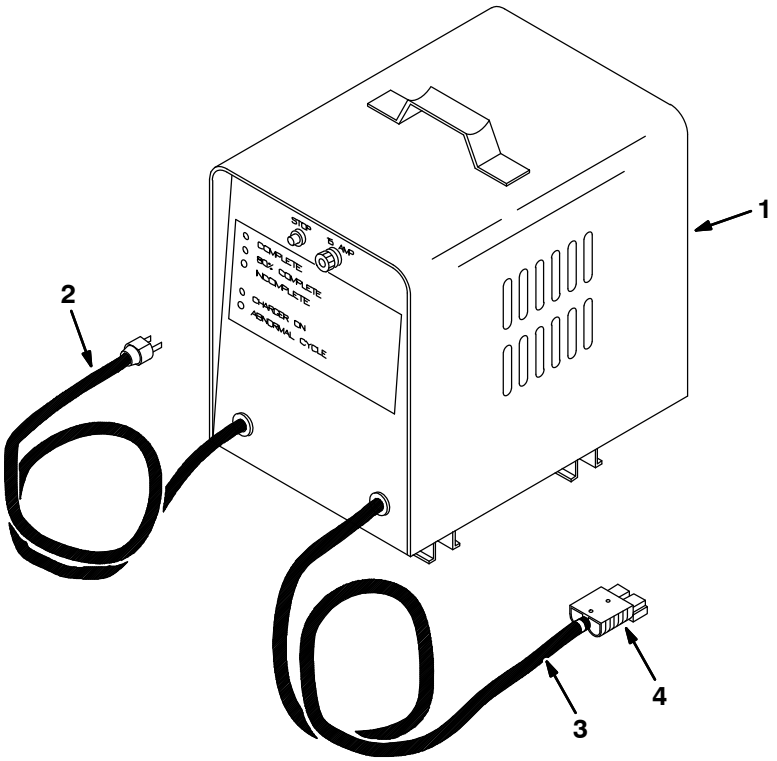

08080–E, NA

	Ref.	Part No.	Serial Number	Description	Qty.
▽	1	374014	(000000–)	Charger 36V/20A/60Hz/1Ph/115V	1
▲	2	374020	(000000–)	Cord Assy A.C.	1
▲	3	374019	(000000–)	Cord Assy D.C.	1
▲	4	130155	(000000–)	Connector, Battery, 6ga 50a, Gray[2cont]	1
▲		374017	(000000–)	Circuit Breaker 15A	1
▲		65954	(000000–)	Circuit Breaker	1
▲		374018	(000000–)	Control Circuit	1
▲		374021	(000000–)	Rectifier Assy	2
▲		374022	(000000–)	Rectifier Scr 20A	2
▲		21776	(000000–)	D.C.Strain Relief	1
▲		21775	(000000–)	A.C.Strain Relief (Obsolete, Replaced by None)	1
▲		374023	(000000–)	Switch, Red Stop	1
▲		65630	(000000–)	Varistor	1

Fig. 10 – Battery Charger Breakdown, 60 Hz, 115V, 374015

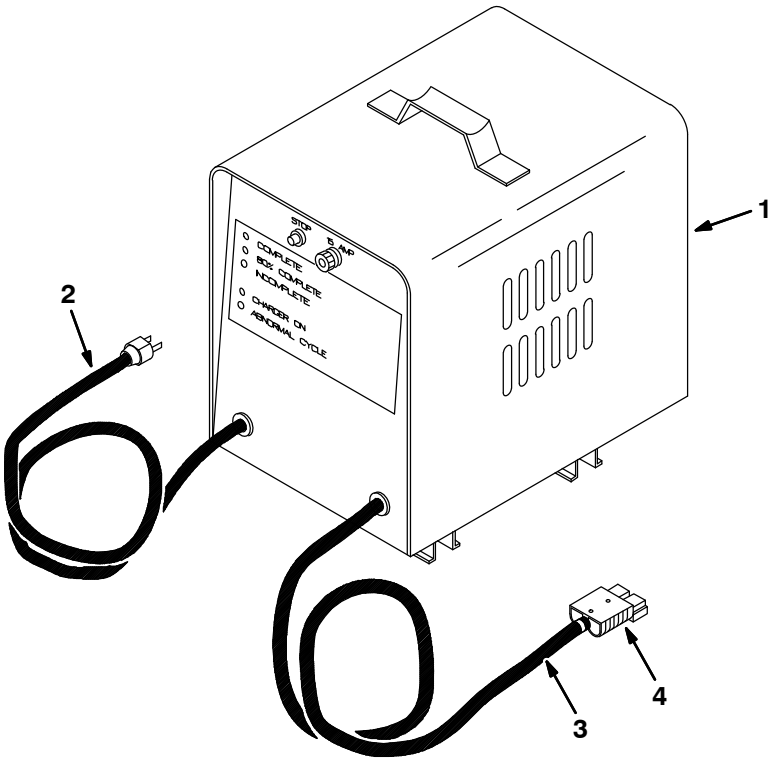

08080–E, NA

	Ref.	Part No.	Serial Number	Description	Qty.
▽	1	374015	(000000–)	Charger 36V/30A/60Hz/1Ph/115V	1
▲	2	374028	(000000–)	Cord Assy A.C.	1
▲	3	388539	(000000–)	Cord Assy D.C.	1
▲	4	130155	(000000–)	Connector, Battery, 6ga 50a, Gray[2cont]	1
▲		374025	(000000–)	Circuit Breaker 20A/AC	1
▲		374026	(000000–)	Fuse, D.C. 80Amp	1
▲		374027	(000000–)	Control Circuit 36V/30A	1
▲		374029	(000000–)	Rectifier Assy	2
▲		21776	(000000–)	D.C.Strain Relief	1
▲		21775	(000000–)	A.C.Strain Relief (Obsolete, Replaced by None)	1
▲		374023	(000000–)	Switch, Red Stop	1
▲		65630	(000000–)	Varistor	1

Fig. 11 – Battery Charger Breakdown, 50 Hz, 230V, 65540

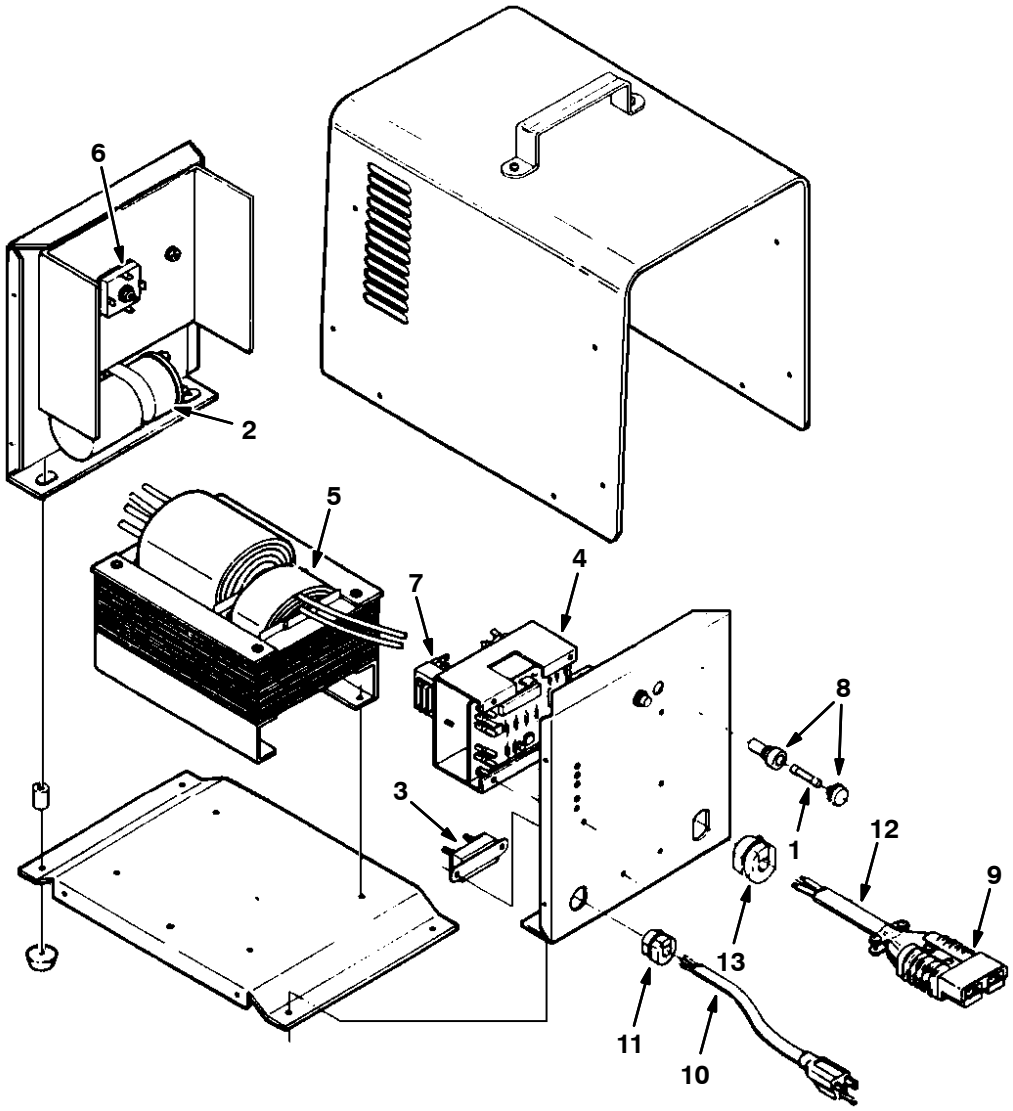

10262–E, NA

	Ref.	Part No.	Serial Number	Description	Qty.
▽		65540	(000000–)	Charger, 36V/20A 50H/ Ph 230V	1
▲	1	65632	(000000–)	Fuse, A.C. 10 Amp	1
▲	2	65958	(000000–)	Condenser	1
▲	3	65954	(000000–)	Circuit Breaker	1
▲	4	65620	(000000–)	Control Assy	1
▲	5	65634	(000000–)	Transformer, Power	1
▲	6	61837	(000000–)	Bridge Rectifier Kit	1
▲	7	65959	(000000–)	Control Transformer	1
▲	8	30058	(000000–)	Holder, Fuse Ac	1
▲	9	130155	(000000–)	Connector, Battery, 6ga 50a, Gray[2cont]	1
▲	10	21770	(000000–)	A.C.Cord Set W/Plug	1
▲	11	21775	(000000–)	A.C.Strain Relief (Obsolete, Replaced by None)	1
▲	12	21772	(000000–)	D.C.Cord Set Wo/Plug	1
▲	13	21776	(000000–)	D.C.Strain Relief	1

Fig. 12 – Battery Charger Breakdown, 50 Hz, 245V, 65740

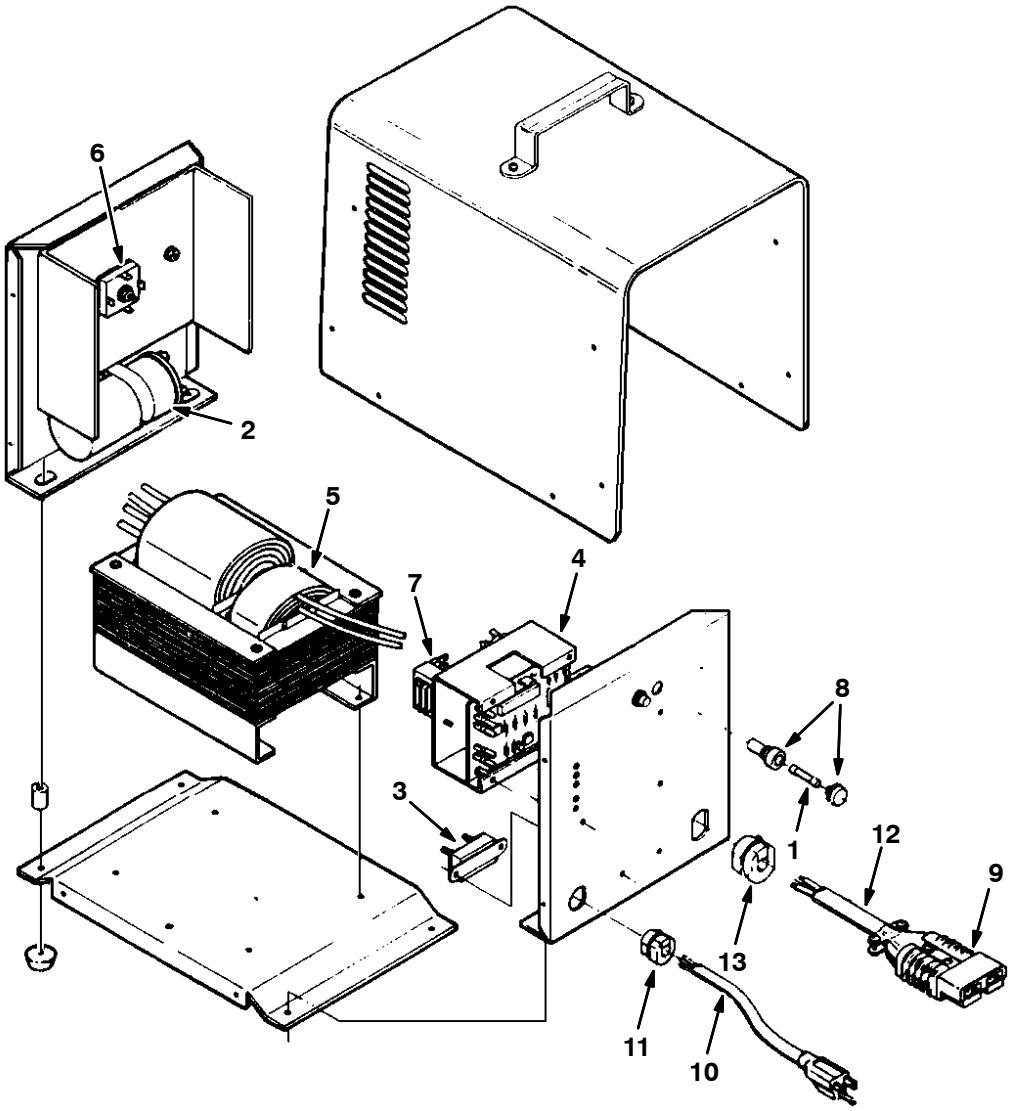

10262–E, NA

	Ref.	Part No.	Serial Number	Description	Qty.
▽		65740	(000000–)	Charger, 36V/20A 50H/1Ph 245V	1
▲	1	65632	(000000–)	Fuse, A.C. 10 Amp	1
▲	2	65958	(000000–)	Condenser	1
▲	3	65954	(000000–)	Circuit Breaker	1
▲	4	65620	(000000–)	Control Assy	1
▲	5	65724	(000000–)	Power Tran	1
▲	6	61837	(000000–)	Bridge Rectifier Kit	1
▲	7	65959	(000000–)	Control Transformer	1
▲	8	30058	(000000–)	Holder, Fuse Ac	1
▲	9	130155	(000000–)	Connector, Battery, 6ga 50a, Gray[2cont]	1
▲	10	21770	(000000–)	A.C.Cord Set W/Plug	1
▲	11	21775	(000000–)	A.C.Strain Relief (Obsolete, Replaced by None)	1
▲	12	21772	(000000–)	D.C.Cord Set Wo/Plug	1
▲	13	21776	(000000–)	D.C.Strain Relief	1

Fig. 13 – Battery Charger Breakdown, 50 Hz,230V, 222595

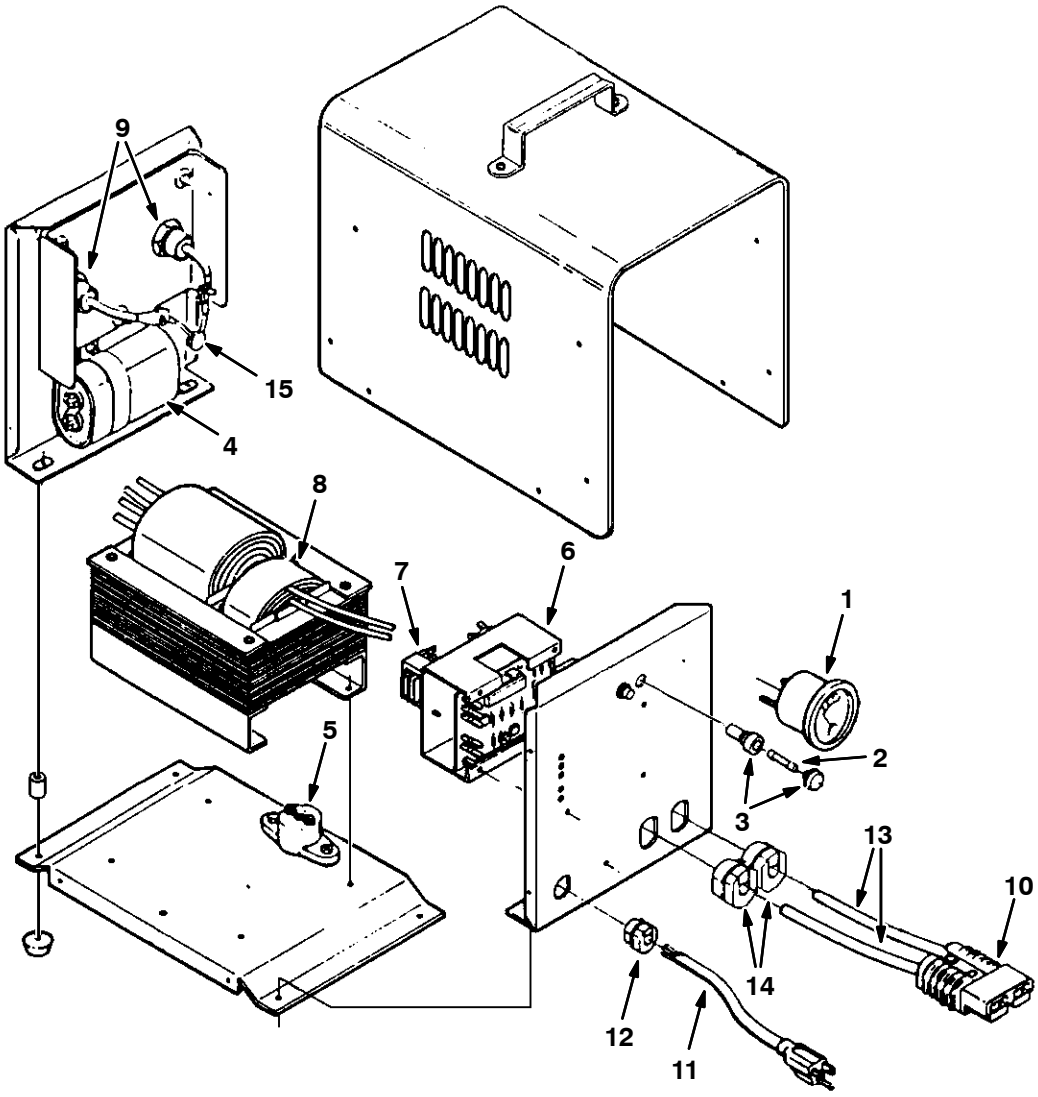

10263–E, NA

	Ref.	Part No.	Serial Number	Description	Qty.
▽		222595	(000000–)	Charger, 36V/30A 50H/1Ph 230V	1
▲	1	38889	(000000–)	Ammeter (Obsolete, Replaced by None)	1
▲	2	65614	(000000–)	Fuse, A.C. 15 Amp (Obsolete, Replaced by None)	1
▲	3	30058	(000000–)	Holder, Fuse Ac	1
▲	4	65613	(000000–)	Condensor 12.5Mfd (Obsolete, Replaced by None)	1
▲	5	65619	(000000–)	Circuit Breaker	1
▲	6	65620	(000000–)	Control Assy	1
▲	7	65959	(000000–)	Control Transformer	1
▲	8	65618	(000000–)	Power Transformer (Obsolete, Replaced by None)	1
▲	9	65616	(000000–)	Diode (Obsolete, Replaced by None)	2
▲	10	130155	(000000–)	Connector, Battery, 6ga 50a, Gray[2cont]	1
▲	11	21770	(000000–)	A.C.Cordset W/Plug	1
▲	12	21775	(000000–)	A.C.Strain Relief (Obsolete, Replaced by None)	1
▲	13	21773	(000000–)	D.C.Cordset W/Plug	1
▲	14	21776	(000000–)	D.C.Strain Relief	2
▲	15	65630	(000000–)	Varistor	1

Fig. 14 – Battery Charger Breakdown, 50 Hz, 245V, 222691

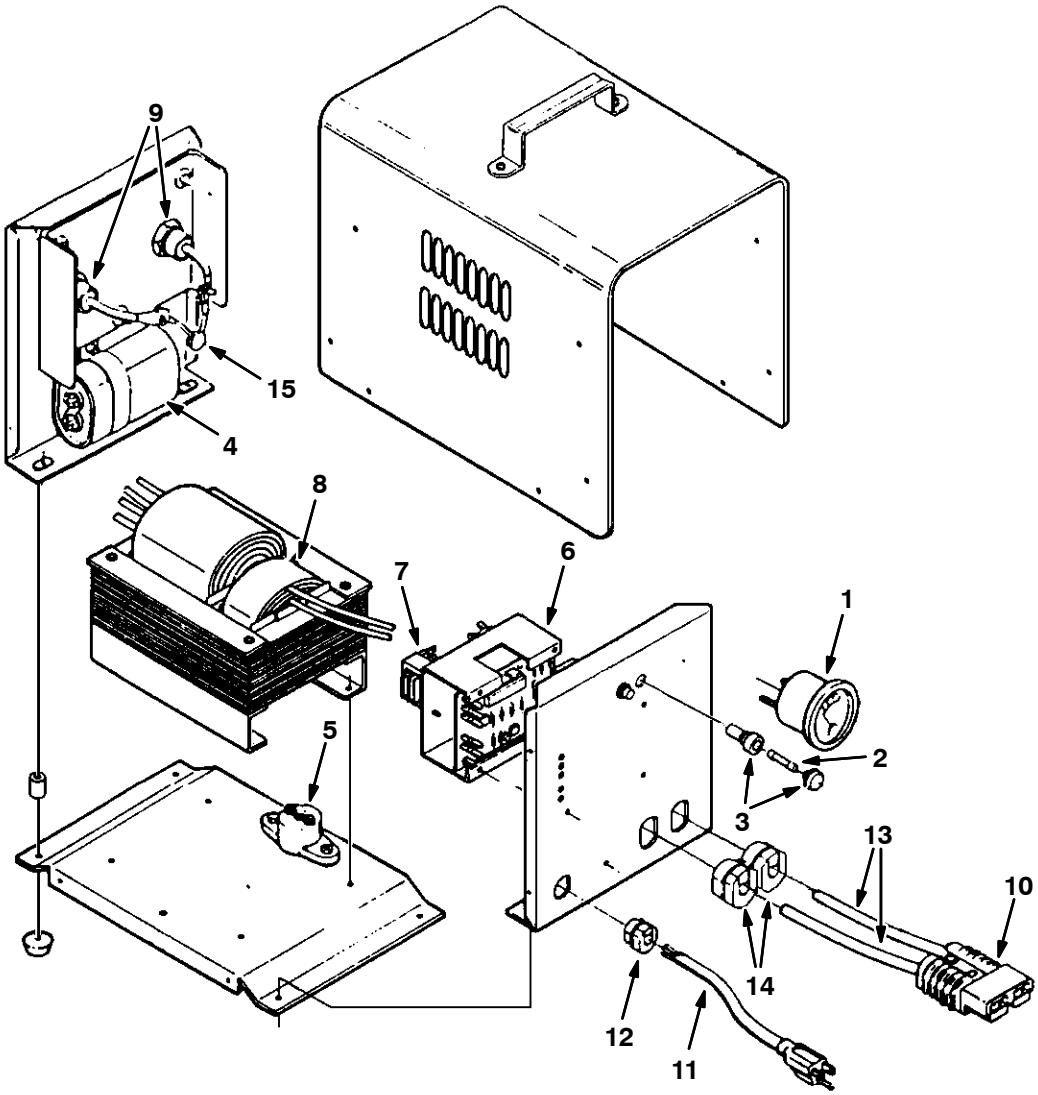

10263–E, NA

	Ref.	Part No.	Serial Number	Description	Qty.
▽		222691	(000000–)	Charger, 36V/30A 50H/1Ph 245V	1
▲	1	38889	(000000–)	Ammeter (Obsolete, Replaced by None)	1
▲	2	65614	(000000–)	Fuse, A.C. 15 Amp (Obsolete, Replaced by None)	1
▲	3	30058	(000000–)	Holder, Fuse Ac	1
▲	4	65726	(000000–)	Capasitor 15Mfd	1
▲	5	65619	(000000–)	Circuit Breaker (Obsolete, Replaced by None)	1
▲	6	65620	(000000–)	Control Assy	1
▲	7	65959	(000000–)	Control Transformer	1
▲	8	65727	(000000–)	Power Transformer	1
▲	9	65616	(000000–)	Diode (Obsolete, Replaced by None)	2
▲	10	130155	(000000–)	Connector, Battery, 6ga 50a, Gray[2cont]	1
▲	11	21770	(000000–)	A.C.Cordset W/Plug	1
▲	12	21775	(000000–)	A.C.Strain Relief (Obsolete, Replaced by None)	1
▲	13	21773	(000000–)	D.C.Cordset W/Plug	1
▲	14	21776	(000000–)	D.C.Strain Relief	2
▲	15	65630	(000000–)	Varistor	1

Fig. 15 – Front Wheel Gearbox Breakdown, 390851

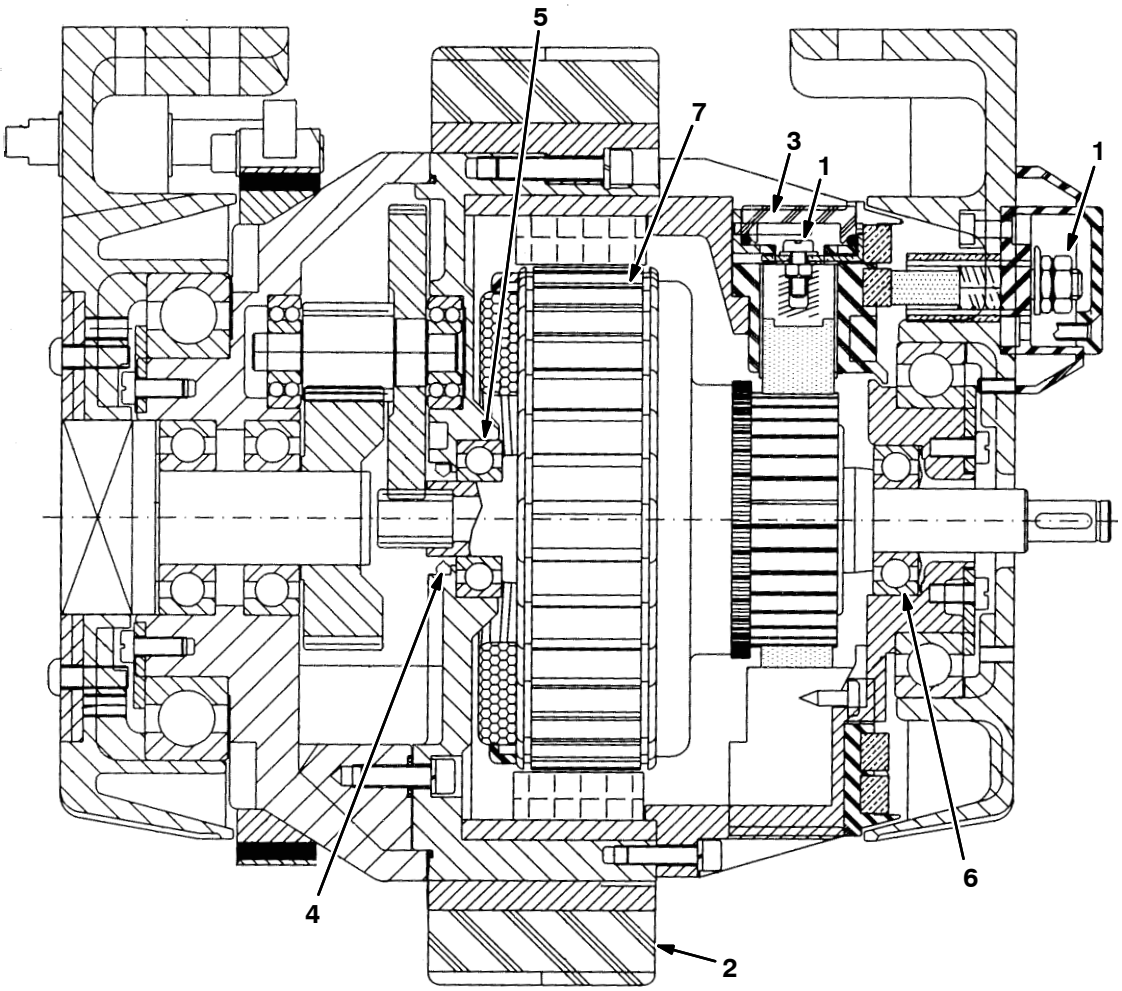

	Ref.	Part No.	Serial Number	Description	Qty.
▽		390851	(000000–)	Gearbox, Wheel, Front, 250mm	1
▲	1	391261	(000000–)	Kit, Brush, Motor	1
▲	2	391259	(000000–)	Tire, Pyu, 250mm	1
▲	3	391262	(000000–)	Kit, Brush, Cover	1
▲	4	391263	(000000–)	Seal, Ring	1
▲	5	391264	(000000–)	Bearing, Gearbox Side	1
▲	6	391265	(000000–)	Bearing, Motor Side	1
▲	7	391266	(000000–)	Armature, Assy, 250mm	1
▲		391271	(000000–)	Caliper, Brake	1
▲		391274	(000000–)	Rotor, Brake, 14mm (Obsolete, Replaced by None)	1

Fig. 16 – Front Wheel Gearbox Breakdown, 374346

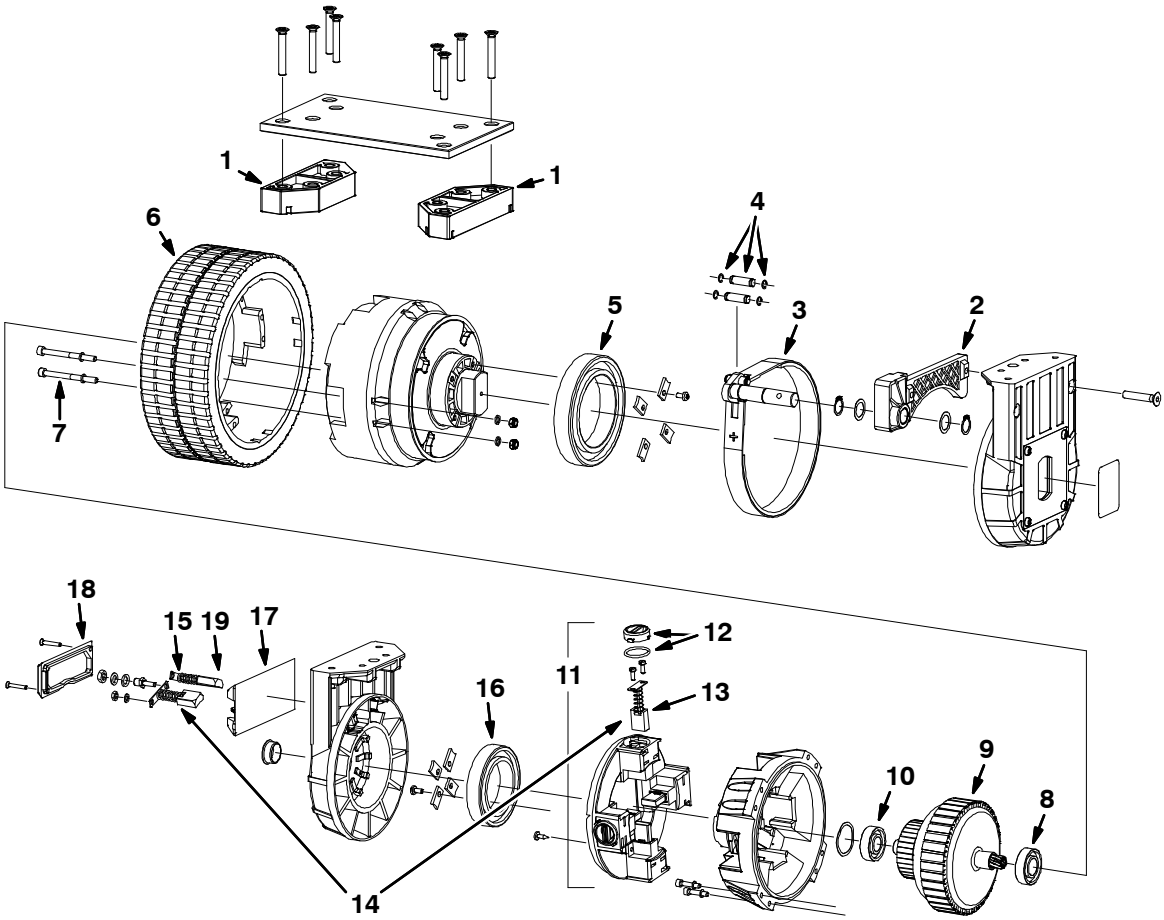

	Ref.	Part No.	Serial Number	Description	Qty.
∇		374346	(000000–)	Gearbox, Wheel, 250mm, 36vdc Band Brake	1
▲	1	1029223	(000000–)	Spacer, Aluminum	2
▲	2	1029220	(000000–)	Bracket, Brake, Complete	1
▲	3	391465	(000000–)	Brake, Band [Amer]	1
▲	4	1030477	(000000–)	Pin Kit, Retainer, Snap Rings	1
▲	5	372874	(000000–)	Bearing, Steering	1
▲	6	391259	(000000–)	Tire, Solid, 250mmx90mm Red	1
▲	7	1029218	(000000–)	Screw, Wheel Mount	8
▲	8	391264	(000000–)	Bearing, Gearbox Side [Amer]	1
▲	9	1029217	(000000–)	Armature, Motor, 250mm	1
▲	10	391265	(000000–)	Bearing, Motor Side	1
▲∇	11	1029228	(000000–)	Ring, Brush Holder	1
▲▲	12	391262	(000000–)	Brush Kit, Cover [Amer}	4
▲▲	13	1029225	(000000–)	Brush Kit, Carbon [4 pcs]	1
▲▲	13	1029224	(000000–)	Brush, Carbon [1 pc]	4
▲∇	14	391261	(000000–)	Brush Kit, Motor [Amer, 1pick=1kit]	1
▲▲	13	1029225	(000000–)	Brush Kit, Carbon [4 pcs]	1
▲▲	13	1029224	(000000–)	Brush, Carbon [1 pc]	4
▲▲	15	1029226	(000000–)	Brush Kit, Carbon [2 pcs]	1
▲▲	15	398492	(000000–)	Brush, Carbon, Motor, Ele [Amer 1 Pc]	2
▲	16	1029227	(000000–)	Bearing, Ball, Brush Side	1
▲	17	391467	(000000–)	Box, Elec, Connection	1
▲	18	391468	(000000–)	Cover, Elec, Connection	1
▲	19	372877	(000000–)	Guide, Brushholder, Slip Ring [Amer]	1

Fig. 17 – Electric Motor Breakdown, 1053284

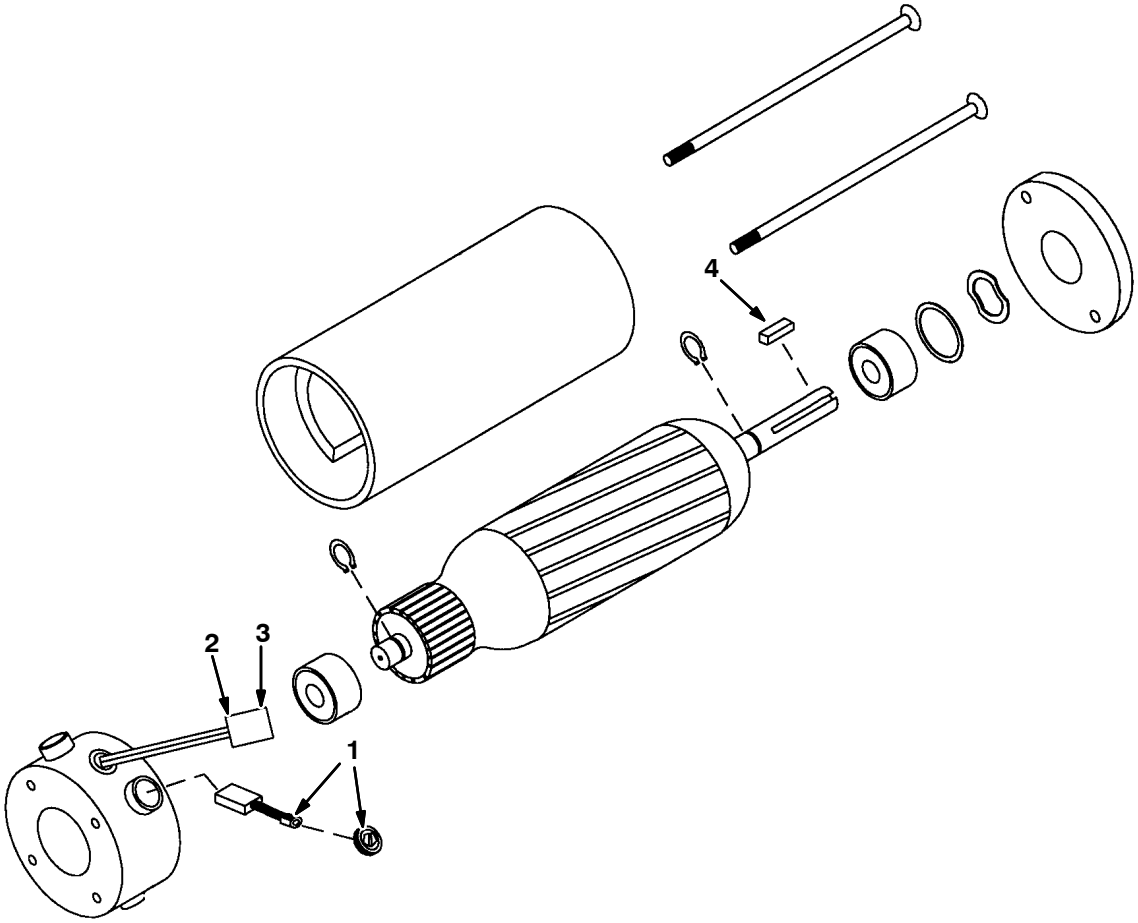

10426–E

	Ref.	Part No.	Serial Number	Description	Qty.
▽		1053284	(000000–)	Motor, Ele, 36vdc 2500rpm 0.75hp	1
▲	1	1039817	(000000–)	Brush Kit, Motor, Ele	1
▲	2	10925	(000000–)	Connector, Fem, 2cav [Mp630 Sealed]	1
▲	3	24537	(000000–)	Terminal, Fem, 10/12ga [Mp630 P2s]	2
▲	4	00912	(000000–)	Key, Sq, 0.19 X 0.19, 1.00l	1

Fig. 18 – Electric Motor Breakdown, 1055614

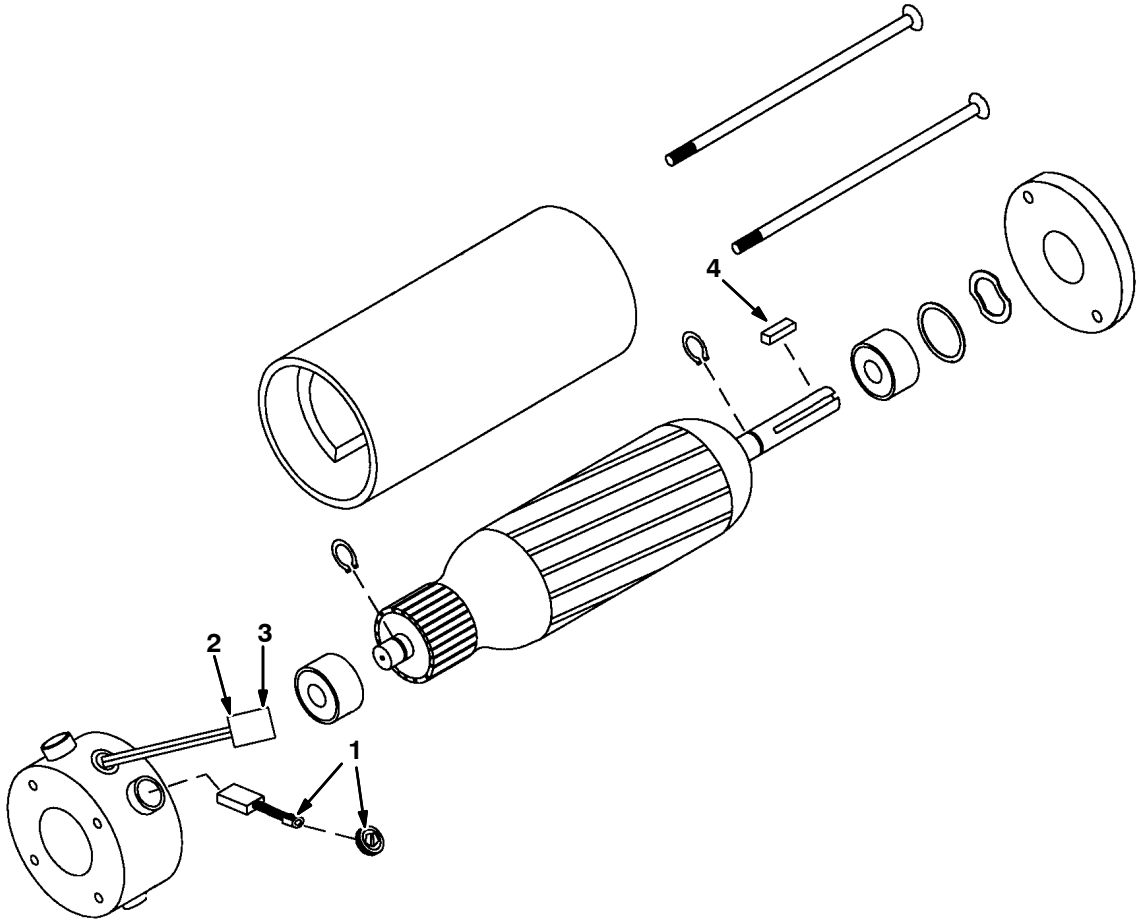

10426–E

	Ref.	Part No.	Serial Number	Description	Qty.
▽		1055614	(000000–)	Motor, Ele, 36vdc 1800rpm 0.60hp	1
▲	1	1039817	(000000–)	Brush Kit, Motor, Ele	1
▲	2	10925	(000000–)	Connector, Fem, 2cav [Mp630 Sealed]	1
▲	3	24537	(000000–)	Terminal, Fem, 10/12ga [Mp630 P2s]	2
▲	4	00912	(000000–)	Key, Sq, 0.19 X 0.19, 1.00l	1

SECTION 5

CONTENTS **PAGE**

PART NUMBER TO PAGE NUMBER CROSS REFERENCE LIST 5-2
PART DESCRIPTION TO PAGE NUMBER CROSS REFERENCE LIST 5-8

PART NUMBER TO PAGE NUMBER CROSS REFERENCE LIST

Part Number	Page Number
00500-10	2-11, 2-21
00912	2-11, 2-53, 4-6, 4-7, 4-20, 4-21
00916	2-21, 2-43, 4-8, 4-9, 4-10, 4-11
00960	2-53
01047	2-39
01314	2-7
01683	3-47
01684	2-49, 2-51, 3-19, 3-21, 3-27
01685	2-23, 2-27, 2-29, 3-27
01713	2-15, 2-17, 3-9, 3-13
01714	2-31
01715	2-15, 2-17
01750	2-53
01754	2-13, 2-45, 2-47, 2-61
01760	2-25
01837	4-3, 4-5
01842	4-3
01856	4-3, 4-5
01969	4-3
01971	4-3, 4-5
01982	4-3
01983	4-3
02076	2-61, 3-25
02141	3-27
02384	2-43
02850	2-15, 2-17, 2-55, 3-3, 3-48
02892	3-41
02942	2-49, 2-51, 3-3, 3-19, 3-21
03192	2-11, 2-35, 2-43, 3-27
04846	3-5
06279	2-49, 2-51, 3-19, 3-21
06416	3-27
06474A	2-31
06506	3-3
06524	2-55
06535	2-39
06549	2-15, 2-17, 2-41, 3-9, 3-13, 3-29, 3-33, 3-45, 3-47
06923	2-45, 2-47
06924	2-61
06927	2-15, 2-17, 3-48
06931	3-31, 3-33
06933	2-15, 2-17, 3-9, 3-13, 3-47
06934	3-29, 3-31, 3-33, 3-47
06942	2-9, 2-53, 2-55, 2-61, 3-7, 3-11
06943	2-9, 2-13, 2-25, 2-43, 2-59, 3-5, 3-7
06944	2-25, 2-31, 2-45, 2-47
06945	2-59, 3-7, 3-11
06947	3-27
06956	3-15, 3-17
06957	2-27, 2-29
06958	2-37
06961	3-23
06962	2-23, 3-5
06963	2-31, 2-41
06967	2-45, 2-47, 3-15, 3-17
06972	2-49, 2-51, 3-19, 3-21
07259	2-23
07449	3-3
07514	3-31, 3-33
07790	2-13, 3-7, 3-11
07791	2-7, 2-13, 3-7, 3-11, 3-29, 3-31, 3-33
07792	3-5
07810	2-37
08085	2-59
08170	2-25, 2-27, 2-29
08182	2-29, 2-31, 2-35
08407	2-19
08708	2-9, 2-13, 2-25, 2-27, 2-31, 2-45, 2-47, 2-53, 2-55, 2-57, 2-59, 3-5, 3-27
08709	2-11, 2-21, 2-31, 2-33, 2-37, 2-39, 2-45, 2-47, 2-53, 3-3, 3-5, 3-15, 3-17, 3-23, 3-27, 3-43, 3-44
08711	2-11, 2-21, 2-33, 2-49, 2-51, 3-19, 3-21, 3-37
08712	2-3, 2-7, 2-23, 2-27, 2-29, 2-37, 2-39, 2-49, 2-51, 3-19, 3-21
08713	2-4, 2-39
08716	2-27, 2-29, 2-57
09010	3-27
09062	2-27
09145	2-9
09146	2-13
09162	2-43, 2-53
09164	2-13, 2-37
09206	2-55
09244	3-5
09252	3-29, 3-33
09737	2-11
09741	2-41
09773	3-7, 3-11
1001959	2-23
1002522	2-29
1002536	2-29
1002537	2-29
1006723	2-35
1008142	2-45, 2-47
1008274	2-49, 3-21
1008275	2-51, 3-19
10155	2-61, 3-25, 3-35
1017079	3-39
1017218	2-7
1017439	2-29
1017440	2-29
1019180	3-39
1019242	3-39
1019764	2-35
1020168	3-47
1020304	3-31, 3-33
1021184	3-31, 3-33
1026017	2-29
1026028	2-29
1029217	4-19
1029218	4-19
1029220	4-19
1029223	4-19
1029224	4-19
1029225	4-19
1029226	4-19
1029227	4-19
1029228	4-19
1030477	4-19
1034890	2-31
1036252	3-7
1036665	2-9
1036873	2-23, 2-77
1037209AM	2-3, 2-4, 2-59
1038957	2-13
1039403	2-3, 2-4, 2-53
1039617	3-7, 3-11
1039817	4-20, 4-21
1040295	2-11
1041030	2-61, 3-25, 3-35
1041766	3-7, 3-11
1041772	3-7, 3-11
1042514	2-31
1042523	2-31
1042525	3-31, 3-33
1042580	3-7, 3-11
1043003	3-7, 3-11
1045426	2-59
1045858	3-29, 3-31, 3-33, 3-42
1046151	2-13, 2-15
1046152	2-13
1046173	2-13, 2-15, 3-29, 3-31, 3-33, 3-42
1047741	2-7
1048955	2-9
1049021	3-27
1049046	3-27

Part Number	Page Number
1051052	3-38
1053284	2-53, 4-20
1053842	2-13
1055614	2-43, 4-21
1055894	2-33, 3-43, 3-44
1058939	3-36
10632	2-31
10632-19	3-47
10632-2	3-29, 3-33
10632-9	2-7
1063907	2-9
1064184	2-13
1064187	2-13, 2-15, 2-17
1064188	3-29, 3-31, 3-33
1064191	2-13, 2-15, 2-17, 3-29, 3-31, 3-33, 3-42
1064858	3-42
1066506	3-27
1067452	2-3, 3-7, 3-11
1068904	2-13
1069580	3-47
1070125	3-29, 3-33
1070384	3-47
1070506	3-47
1070508	3-47
1070509	3-47
1070658	3-47
1071084	3-36
1071856	2-23
1072011	3-42
1073048	3-38
1075003	2-13
1075296	3-29, 3-33
1076096	3-7, 3-11
1076122	3-7, 3-11
1076378	2-9
1076785	2-77
1076981	2-7
1076982	2-7
1076983	2-7
1076985	2-9
1076986	2-59
1076987	2-57
1076988	2-13
1076989	2-59
1076990	2-9
1076991	2-7
1076992	2-7
1076993	2-7
1077021	3-7, 3-11
1077022	3-7
1077023	3-7, 3-11
1077024	3-5
1077025	3-5
1077027	2-7
1077029	3-7, 3-11
1077030	3-29, 3-31, 3-33
1077031	3-29, 3-31, 3-33
1077032	3-29
10820	2-43
10912	3-7, 3-11
10925	4-3, 4-5, 4-6, 4-7, 4-8, 4-9, 4-10, 4-11, 4-20, 4-21
10926	4-3, 4-5
11109	2-21, 3-43
11516	2-49, 2-51, 3-19, 3-21
11635	2-53
11747	2-37
11756	4-3
1201894	2-9
1201997	3-36
1204142	3-36
12138	2-41
12274	2-35
12312	2-41, 3-31, 3-33, 3-45
12323	3-3
12333	2-21
1255208	2-78
130155	2-61, 3-25, 3-39, 4-12, 4-13, 4-14, 4-15, 4-16, 4-17
130773	3-36
13513	2-31
140916	3-47
14601	2-31
14799	2-11
15047	2-49, 2-51, 3-3, 3-19, 3-21
15648	2-49, 2-51, 3-3, 3-19, 3-21
15675	3-27
15678	2-23, 2-49, 2-51, 3-19, 3-21
16213	2-35
16368	2-7
16411	2-4
16412	2-4
16735	2-7, 2-13, 2-21, 3-29, 3-31, 3-33
16931	2-7, 2-21, 2-39, 2-43, 3-23
16932	2-53
16946	2-39
17288	2-39
17363	3-7, 3-11, 4-3
18627	4-3
18628	4-3, 4-5
18630	4-3
18631	4-3
18811	3-7, 3-11
19064	2-61
19065	2-55, 2-59, 3-9, 3-13
19066	2-13, 2-15, 2-17, 2-35, 3-5, 3-9, 3-13, 3-29, 3-31, 3-33
19312	2-15, 2-17
19314	2-15, 2-17
19315	2-15, 2-17
19324	3-9, 3-13
20170	3-9, 3-13
20536-1	2-39
21120	3-27
21765	4-3
21770	4-14, 4-15, 4-16, 4-17
21772	4-14, 4-15
21773	4-16, 4-17
21775	4-12, 4-13, 4-14, 4-15, 4-16, 4-17
21776	4-12, 4-13, 4-14, 4-15, 4-16, 4-17
222158	2-9
222159	2-3, 2-7, 2-23, 2-31, 2-37, 2-53
222217	2-61, 3-25
222220	2-15
222244	3-5
222268	3-5
222290	2-77, 3-9, 3-13
222409	2-53, 4-6
222460	2-7, 2-21, 2-45, 2-47, 2-53, 3-15, 3-17
222470	2-41
222473	2-61, 3-35
222504	2-23
222534	2-13
222556	2-39
222595	3-39, 4-16
222607	2-31
222623	4-6, 4-8, 4-10
222625	4-6, 4-7, 4-8, 4-9, 4-10, 4-11
222629	4-6, 4-7, 4-8, 4-9, 4-10, 4-11
222635	4-6, 4-8, 4-10
222637	4-6, 4-8, 4-10
222638	4-6, 4-8, 4-10
222683	2-13
222691	3-39, 4-17
222692	2-43
22298	2-21, 2-23
223061	2-11
223065	2-11, 3-27
223068	2-11
223070	2-11
223073	2-11
223075	2-11
223078	2-9
223080	2-9
223153	2-19, 2-23
223154	2-19, 2-23
223157	2-19, 2-23
223159	2-19, 2-23
223160	2-19, 2-23
223161	2-19, 2-23
223198	2-35
223264	3-7, 3-11, 4-3, 4-5
223320	2-31

Part Number	Page Number
223470	2-4
223600	2-31
223601	2-31
23524-1	2-3, 2-4, 2-53
23709	2-59
24537	4-6, 4-7, 4-8, 4-9, 4-10, 4-11, 4-20, 4-21
25006	3-9, 3-13
25047	2-21, 2-31, 3-23
25312	3-45
25737	2-43, 3-5
26395-1	2-7, 2-21, 2-23
27920	2-13
28010	2-43
29558	2-25, 2-35
29584	2-35
30013	2-4, 2-37
30058	4-14, 4-15, 4-16, 4-17
30533	3-37
32483	2-7, 2-13, 2-15, 2-17, 2-23, 2-29, 2-31, 2-35, 2-61, 3-7, 3-11
32485	2-31
32486	2-21, 2-31, 2-33, 2-35, 2-43, 3-37
32490	2-9, 2-23, 2-37, 2-43, 2-53, 2-55, 2-57, 2-59, 3-5, 3-7, 3-11, 3-23
32491	2-7, 2-9, 2-13, 2-37, 2-39, 2-41, 2-43, 2-45, 2-47, 2-53, 2-57, 3-5, 3-23, 3-27, 3-38, 3-45
32492	2-29, 2-35, 3-3, 3-5, 3-7, 3-11, 3-23, 3-27
32493	2-11, 2-45, 2-47, 3-15, 3-17
32516	2-15
32646	2-7
32975	2-61
32978	2-15
32980	2-15, 2-17, 3-9, 3-13, 3-31, 3-33
32981	2-31, 3-23
32982	2-15, 2-17
32983	3-38
32984	2-15, 2-17, 3-9, 3-13
330250	3-51
330252	3-51
330253	3-51
330254	3-51
330255	3-51
33518	2-59
33584	2-13
33806	2-9, 2-55
33930	2-29
35836	2-41
35846	2-43
360369	3-38
360370	3-38
360520	3-29, 3-33, 3-42
360801	2-25
360821	2-3
360973	2-7, 2-13, 3-47
361076	2-13
361144	2-13
361339	2-3, 2-7, 2-19, 2-23, 2-37
36191	2-25, 2-27, 2-29
363087	2-35, 2-39, 2-41, 2-43
36328	2-41
363301	2-53
363503	2-7
363976	3-3
363981	2-35
36643	2-43
367679	2-55
369319	2-21, 2-33
369345	2-21
369362	3-27
369371	3-27
369372	3-27
369415	3-23
369435	3-27
369462	3-27
369466	3-27
369470	3-27
369473	3-27
369474	3-27
369478	3-27
369481	3-23, 3-27
369487	3-27
369496	3-27
369702	2-7
369781	2-45, 2-47, 3-15, 3-17
369795	2-49, 2-51, 3-19, 3-21
369796	2-49, 2-51, 3-19, 3-21
36996	3-23
370048	2-5
372874	4-19
372877	4-19
374000	2-78
374014	3-39, 4-12
374015	3-39, 4-13
374017	4-12
374018	4-12
374019	4-12
374020	4-12
374021	4-12
374022	4-12
374023	4-12, 4-13
374025	4-13
374026	4-13
374027	4-13
374028	4-13
374029	4-13
374163	2-23
374179	3-44
374201	2-53, 4-7
374225	2-35
374266	2-43, 4-9
374268	2-21, 4-11
374273	4-9, 4-11
374299	2-19, 2-23
374346	2-23, 4-19
375018	2-21
375176	4-7
377324	2-13
377328	3-27
377411	2-27, 2-35
377537	2-4
377538	2-4
377540	2-4
378804	2-5
378901	2-35
378983	4-3
37909	4-3
37912	4-3, 4-5
37926	4-3
37929	4-3, 4-5
379891	2-59
383718	2-3
383723	3-9
383724	2-15, 2-17, 3-9
383727	3-13
383728	3-13
383831	2-13
383861	2-4
383910	2-7
384102	2-4
384246	3-3
384247	3-3
384285	2-78
384413	2-57
384414	2-31
384416	2-7
384418	3-3
384419	3-3
384423	2-7
384426	2-7
384432	2-3, 2-53
384434	2-9
384435	2-55
384451	2-33
384462	2-15, 2-17, 3-48
384473	2-5
385612	3-27
385650	2-19
385663	3-7, 3-11
385728	2-31
385729	2-31
385766	2-21, 3-43
386810	2-15, 2-17, 3-9, 3-13
388539	4-13
38889	4-16, 4-17

Part Number	Page Number
39005	2-25, 2-35
39019	2-49, 2-51, 3-3, 3-19, 3-21
390848	2-23
390851	2-23, 4-18
390855	2-23
390856	2-27
390857	2-27
390868	2-25
390892	2-27
390893	2-27
390895	2-27
391259	4-18, 4-19
391261	4-18, 4-19
391262	4-18, 4-19
391263	4-18
391264	4-18, 4-19
391265	4-18, 4-19
391266	4-18
391271	4-18
391274	4-18
391300	2-23
391389	2-27
391401	2-11
391465	4-19
391467	4-19
391468	4-19
39277	2-21, 2-33, 2-41, 2-45, 2-47, 3-43, 3-44
39278	2-53, 3-5
39279	2-57
39283	3-3, 3-5, 3-7, 3-11, 3-27
39284	2-31, 3-23
392966	2-35
39311	3-3
39312	2-31, 3-3
39313	3-27
39323	3-3
39326	2-11
39327	2-21
39349	2-11, 2-15, 2-17, 2-21, 3-9, 3-13, 3-29, 3-31, 3-33, 3-43
39350	3-27
39658	2-13, 2-45, 2-47
398329	2-4
398492	4-19
398511	4-5
398512	4-5
398513	4-5
398514	4-5
398515	4-5
398516	4-5
398517	4-5
398518	4-5
398519	4-5
398520	3-7, 3-11, 4-5
398526	3-31, 3-33
40678-1	2-7, 2-15, 2-17
40758	2-37
41178	2-23
41185	2-53
41186	2-21
41187	2-11
41342	2-57
41345	2-49, 2-51, 3-19, 3-21, 3-37
41346	2-19
41430	2-31, 2-35, 2-39, 2-41, 2-43, 3-3, 3-5, 3-23, 3-27
41702	2-15, 2-17
41732	2-59
44078	2-13
44906	2-49, 2-51, 3-19, 3-21
44961	2-21, 2-53
45283	3-29, 3-33
45405	2-15, 2-17
46390	2-41
46800	2-43, 2-59
46820	2-11
47080	3-9, 3-13
49145	2-33
49177	3-38
49225	2-19, 2-23
49266	2-7, 2-21, 2-59, 3-47
49609	2-31, 2-39
49697	2-59, 3-3
51109	2-35
51225-1	3-3
54345	2-7
54396	2-9
54400	2-45, 2-47, 3-15, 3-17
54660	3-27
54745	2-35
55094	3-27
55272	3-42
55845	2-35
56094	2-7
56799	3-41
57164	2-13, 2-15
57167	2-13
57751	2-13, 2-15, 3-29, 3-31, 3-33, 3-42
57803	3-29, 3-31, 3-33, 3-42
58078	3-27
58494	3-7, 3-11
58518	3-29, 3-33
58519	3-29, 3-33
58520	3-29, 3-33
58819	2-7
59633	2-37
59962	3-5
59965	3-31, 3-33
60386	4-3, 4-5
61297	4-3, 4-5
61298	4-3
61300	4-3, 4-5
613787	3-51
61837	4-14, 4-15
62595-16	2-7, 2-15, 2-17
63740	2-61, 3-25
64153	3-5
64425	3-3
65441	3-3
65540	3-39, 4-14
65613	4-16
65614	4-16, 4-17
65616	4-16, 4-17
65618	4-16
65619	4-16, 4-17
65620	4-14, 4-15, 4-16, 4-17
65630	4-12, 4-13, 4-16, 4-17
65632	4-14, 4-15
65634	4-14
65665	2-13
65724	4-15
65726	4-17
65727	4-17
65740	3-39, 4-15
65742	2-61
65954	4-12, 4-14, 4-15
65958	4-14, 4-15
65959	4-14, 4-15, 4-16, 4-17
66185	3-27
67767	2-9, 2-23
68106	3-13
68275	2-9
69461	3-38
72114	3-29, 3-31, 3-33
72763	3-5
72970	3-45
73370	3-5
74455	2-7, 2-9, 2-21, 2-31
75575	2-25, 2-39
75934	2-35
76062	2-15, 2-17
76438	3-3
76570	2-45, 2-47, 3-15, 3-17, 3-23
76955	2-9
78553	2-13
80042	2-5, 3-19, 3-21
80127	2-49, 2-51, 3-19, 3-21
80299	3-5
80317	3-3
80318	3-3
80395	2-45, 2-47, 3-15, 3-17
81509	3-31, 3-33
81569	2-31
81580	2-7
81581	2-7
81582	2-7

Part Number	Page Number
81601	2-7
81672	2-35
81681	2-33
81682	2-33
81685	2-25
81696	2-7
81697	2-55
81705	2-43
81710	2-43
81711	2-43
81713	2-43
81715	2-3, 2-37
81716	2-37
81717	2-37
81719	2-37
81721	2-7
81722	2-37
81723	2-37
81725	2-3, 2-37
81726	2-3, 2-37
81727	2-3, 2-37
81728	2-37
81729	2-41
81731	2-41
81733	2-43
81734	2-39
81735	2-41
81736	2-39
81739	2-41
81740	2-3, 2-39
81747	2-37
81748	2-3, 2-37
81750	2-51, 3-19
81759	2-39
81769	2-43
81775	2-41
81776	2-43
81779	2-7
81780	2-43
81783	2-49, 2-51, 3-19, 3-21
81784	2-49, 2-51, 3-19, 3-21
81785	2-47, 3-15
81786	2-49, 3-21
81791	2-37
81794	2-39
81795	2-45, 3-17
81796	2-43, 2-45, 2-47
81797	2-37
81798	2-43
81803	2-59
81816	2-55
81818	2-41
81819	2-43
81822	2-49, 2-51, 3-19, 3-21
81828	2-53
81830	2-3, 2-4, 2-53
81835	2-53
81838	2-3, 2-4, 2-53
81842	2-53
81843	2-53
81844	2-53
81845	2-53
81848	2-53
81855	2-7
81860	2-57
81870	2-57
81874	2-9
81875	2-53
81876	2-53
81884	2-41
81888	2-5
81889	2-59
81890	2-53
81891	2-53
81894	2-43
81896	2-43
81899	2-3, 2-43
81902	2-9
81910	2-9
81911	2-57
81913	2-39
81917	2-53
81918	2-37
81919	2-49, 2-51, 3-19, 3-21
81922	2-59
81924	2-77
81929	3-11
81930	2-21
81932	2-15, 3-48
81940	2-43, 4-8
81941	2-21, 4-10
81942	2-31
81946	3-29, 3-31, 3-33
81955	2-45, 2-47, 3-15, 3-17
81956	2-45, 2-47
81959	2-45, 2-47
81963	2-55
81965	2-3, 2-4, 2-59
81966	2-3, 2-4, 2-59
81989	2-31
81995	2-9
81997	3-41
82839	2-7, 2-31
83030	2-5
83031	2-5
83033	2-33
83036	2-21
83038	2-3, 2-4, 2-53
83039	2-3, 2-4, 2-59
83041	2-25
83043	2-21
83044	2-19
83050	2-3, 2-21
83051	2-21
83052	2-21
83053	2-3, 2-21
83059	2-21
83069	2-21
83070	2-19
83081	2-21
83091	2-21
83094	2-21
83095	2-21
83097	2-19, 2-23
83099	2-21
83112	2-11
83113	2-11
83115	2-3, 2-4, 2-59
83116	3-41
83117	2-3, 2-37
83119	2-3, 2-4, 2-37
83122	2-9, 3-51
83123	2-55
83124	2-9
83134	2-25
83136	2-25
83137	2-25
83138	2-25
83139	2-25
83149	2-35
83154	2-7
83155	2-7
83157	2-7
83165	2-55
83172	2-13
83188	3-48
83189	2-3, 2-4, 2-41
83194	3-38
83199	3-3
83203	3-42
83209	3-29
83221	3-45
83251	2-21
83253	3-31
83254	3-31, 3-33
83255	3-35
83265	3-31, 3-33
83267	3-37
83268	3-7, 3-11
83273	3-7, 3-11
83277	3-7
83278	3-7, 3-11
83279	3-7, 3-11
83282	3-7, 3-11
83285	3-5
83286	3-5
83287	3-5
83288	3-5
83289	2-3, 3-5
83296	3-5
83298	3-5
83309	3-5
83313	3-3
83315	3-3
83318	3-3
83324	3-3
83325	3-3
83332	3-3

Part Number	Page Number
83335	3-3
83338	3-3
83341	3-3
83342	3-3
83347	3-3
83348	3-3
83358	3-25
83361	3-23
83362	3-23
83363	3-23
83364	2-9
83365	3-23, 3-25
83370	3-23
83371	3-23
83375	3-23
83376	3-23
83377	3-23
83380	3-27
83381	3-23
83382	3-23
83384	2-59
83389	3-33
83395	3-45
83399	2-21
83411	2-61
83414	2-61
83415	2-61, 3-35
83417	2-61
83420	2-3, 2-4, 2-25
83425	2-39
83426	2-59
83427	2-59
83433	3-43
83435	3-41
83439	2-59
83442	2-21
83446	2-21
83447	2-57
83518	2-78
83520	2-78
83528	2-13
83530	3-29, 3-31, 3-33
83531	3-29, 3-31, 3-33
83542	2-59
86240	2-29
86430	3-7, 3-11
86860	3-3
87242	2-49, 2-51, 3-19, 3-21
87299	2-53
87308	2-7, 2-53, 3-7, 3-11
87319	2-15, 2-17
87435	2-61, 3-7, 3-11, 3-25
87725	2-31
87816	3-3
9001054	3-39
9001055	3-39
9003353	3-9
9003354	2-15
9003357	3-13
9005082	2-9
9007131	3-31, 3-33
9009990	3-47
9010085	3-47
9010086	3-47
9010301*	3-36
9014885	3-51
9017657	3-7, 3-11
9018722	2-23
9021364	2-55
9021365	2-55
9021366	2-9
9021367	2-9
9021614	3-7, 3-11
97031	2-35
989954	3-40
989959	3-40

PART DESCRIPTION TO PAGE NUMBER CROSS REFERENCE LIST

A

A.C.Cord Set W/Plug, 4-14, 4-15
A.C.Cordset W/Plug, 4-16, 4-17
A.C.Strain Relief (Obsolete, Replaced by None), 4-12, 4-13, 4-14, 4-15, 4-16, 4-17
Alarm Assy, Backup, 12-48vdc 82-102dba, 3-31, 3-33
Alarm Assy, Backup, 12/48vdc, 3-31, 3-33
Alarm Kit, Backup / A/V, Ci [6100], 3-33
Alarm Kit, Backup, 36V, 6100, 3-31
Ammeter (Obsolete, Replaced by None), 4-16, 4-17
Angle, 2-45, 2-47, 3-15, 3-17
Angle, Brace, 2-13
Antenna, Telem, 180 In [Gprs], 3-47
Arm Wldt, Brake, 2-27, 2-29
Arm Wldt, Brake Ext, 2-25
Arm Wldt, Lift Lh, 3-3
Arm Wldt, Lift Rh, 3-3
Arm Wldt, Saety, Sppt, Seat, .38d 06.5d, 2-9
Arm, Brake, Lift, Lh, 2-25
Arm, Brake, Lift, Rh, 2-25
Arm, Link, Brake, Lh, 2-27, 2-29
Arm, Link, Brake, Rh, 2-27, 2-29
Armature, 4-3, 4-5
Armature, Assy, 250mm, 4-18
Armature, Motor, 250mm, 4-19
Axle, Wheel, Front, 2-21

B

Bag, Vacuum, Paper [1pick=1pkg of 10bag], 2-3, 3-7, 3-11
Balljoint, 2-31
Bar, Batt.Stop, 3-27
Battery Kit, 36V 220Ah Dry, 3-35
Battery Kit, Rollout, 6100, 3-23
Battery Pack Kit, Rollout, 6100, 3-25
Battery, 6V, Moist/Dry, 3-35
Battery, 6V, Wet, 3-25
Battery, 6V, Wet, 2-61
Bearing, 2-37, 4-3, 4-5
Bearing Assy, 2.33d 1.25b Cup/Cone, 2-19, 2-23
Bearing Assy, Front Wheel, 2-21
Bearing Assy, Rear Wheel, 2-33
Bearing Assy, Vac Fan, 2-53
Bearing Kit, Ci, Front Drive Wheel, 2-19, 2-23
Bearing Kit, Motor, Ele, 4-9, 4-11
Bearing, Ball, 2-3, 2-21, 2-33, 2-43, 2-53
Bearing, Ball, 0.47b 1.26d 0.39w, 2-3, 2-4
Bearing, Ball, 0.79b 1.85d 0.55w, 2-41
Bearing, Ball, Brush Side, 4-19
Bearing, Cam Follower, 3-23
Bearing, Fiberglide, 3-3
Bearing, Flange, 2-11, 2-49, 2-51, 3-3, 3-5, 3-19, 3-21, 3-27
Bearing, Gearbox Side, 4-18
Bearing, Gearbox Side [Amer], 4-19
Bearing, Motor Side, 4-18, 4-19
Bearing, Motor, Ele [Magnetek], 4-6, 4-8, 4-10
Bearing, Needle, 2-19, 2-23
Bearing, Steering, 4-19
Bearing, Thrust 0.50B 0.87D 0.06W, 3-3
Bearing, Thrust, 0.53B 1.00D 0.03W, 2-37
Belt, 3V, 2-3, 2-43
Belt, Seat, 3-37
Belt, Synchronous, 25mm 05p 500l [Gt], 2-3
Belt, Timing, 5Mm X 25Mm X 100, 2-21
Belt, V 3L520, 2-3, 2-53
Belt, V, [3l] 33.9l, 2-4
Belt, V, [3l] 50.0l, 2-4
Belt, V, [3v] 32.9l, 2-3
Belt, V, 3l 52.0l, 2-3
Block, Stop, Batt Cart Lock, 3-27
Bolt, Carriage, .38-16 X 1.25, 2-43
Bolt, Shld, .31d X 1.00, .25-20, 2-35
Boot, 2-13, 2-15, 2-61, 3-25, 3-29, 3-31, 3-33
Boot, Circuitbreaker, 2-13, 2-15, 2-17, 3-29, 3-31, 3-33, 3-42
Box Assy, Vac Wand, 3-7, 3-11
Box Assy, Vac Wand [Gray], 3-7, 3-11
Box Assy, Vacuum W/Label, 2-55
Box Assy, Vacuum W/Label (Japan Only), 2-55
Box, Elec, Connection, 4-19
Brace, Battery Case, 3-23
Brace, Seat Support, 2-9
Bracket Kit, Alarm, Backup, 3-31, 3-33
Bracket Wldt, Flap, Front, 2-39
Bracket Wldt, Roller, Battery, 3-23
Bracket Wldt, Sidebrush, 2-49, 2-51, 3-19, 3-21
Bracket, Adapter, Switch, 3-31, 3-33
Bracket, Battery Brace, 2-61
Bracket, Brake, Complete, 4-19
Bracket, Brake, Pivot, 2-27, 2-29
Bracket, Brush Arm, 2-41
Bracket, Channel, Mtg, Brake, 2-35
Bracket, Fan End, 4-3, 4-5
Bracket, Fl Light & B/U Alarm, 3-29, 3-31, 3-33
Bracket, Keeper, 3-3
Bracket, Latch, 2-55
Bracket, Latch, Hopper, 2-59
Bracket, Light/Alarm [Gray], 3-29, 3-31, 3-33
Bracket, Lip, Hopper, 2-57
Bracket, Mounting, Motor, 2-53
Bracket, Mtg, Fire Extinguishe, 3-45
Bracket, Mtg, Switch, 3-31, 3-33
Bracket, Skirt, Front, 2-39
Bracket, Stop, Battery Case, 3-23, 3-27
Bracket, Support, Brace, 3-23
Bracket, Support, Recirc, 2-37
Bracket, Thermal Sensor, 2-55
Brake Assy, Parking [6100], 2-35
Brake Kit, Disc, 2-3, 2-25
Brake, Band [Amer], 4-19
Bridge Rectifier Kit, 4-14, 4-15
Brkt, Frame, 3-5
Brush Arm Wldt, 2-43
Brush Door Wldt, 2-41
Brush Kit, Carbon [2 pcs], 4-19
Brush Kit, Carbon [4 pcs], 4-19
Brush Kit, Cover [Amer}, 4-19
Brush Kit, Motor, 3-7, 3-11
Brush Kit, Motor [Amer, 1pick=1kit], 4-19
Brush Kit, Motor, Ele, 4-20, 4-21
Brush Mechanism, 4-3, 4-5
Brush, Carbon [1 pc], 4-19
Brush, Carbon, Motor, Ele [Amer 1 Pc], 4-19
Brush, Disk, Swp, Heavy Duty, Polypropylene, 2-5
Brush, Disk, Swp, Polypropylene, 2-5
Brush, Side, 3-19, 3-21
Brush, Swp, Natural Fiber, Spiral, 2-5
Brush, Swp, Polypropylene, Spiral, 2-5
Brush, Swp, Wedge, Polypropylene, Spiral, 2-5
Brush, Swp, Window, Polypropylene, Spiral, 2-5
Brush&Spring Assy Se, 2-49, 2-51, 3-19, 3-21
Brushholder, 2-49, 2-51, 3-19, 3-21
Bulb, 3-29, 3-33
Bumper Wldt, V-Mop, 3-3
Bumper, Rubber, 2-55, 3-23
Bumper, Rubr. 2.50Diax 1.00, 3-23, 3-27
Bushing, Flng, 0.44b 1.25d 0.25l, 2-35
Button, Plug, 2-7, 2-9, 2-13, 2-55

C

Cable Assy, 6ga [6100e - Telemetry], 3-47
Cable, 6ga, Blk [6100e, Telemetry], 3-47
Cable, Battery, 2-61, 3-25
Cable, Glv .13d 031.3l .25eye /.50eye, 2-47
Cable, Glv .13d 037.8l .25eye /.50eye, 3-17
Cable, Sidebrush, 2-49, 2-51, 3-19, 3-21
Cable, Sidebrush Lift Lh, 3-15
Cable, Sidebrush Lift Rh, 2-45
Caliper, Brake, 4-18
Caliper, Brake 6.5 - 8.0 Dia, 2-25
Cam, Squeegee, 3-5
Cap Wldt, Roller Shaft, 3-27
Cap, Battery, 2-61, 3-25, 3-35
Cap, Brush, 2-49, 2-51, 3-19, 3-21
Cap, Brush Holder, Motor, Ele[Magnetek], 4-6, 4-7, 4-8, 4-9, 4-10, 4-11
Cap, Fill, Battery [Trojan], 3-36
Capasitor 15Mfd, 4-17
Case Wldt, Battery, Roll-Out, 3-23, 3-25

Caster, Rigid, 5.0d X 2.0w, 4hole, 3-27
Caster, Swivel, 5.0d 2.0w, 4hole, Gray, 3-27
Catch, Draw Pull, 2-59
Chain, Link, 2-37
Chain, O-Ring, Rlr, #40 X 56 P, 2-21
Chain, Roller #35, .375 Pitch, 2-11
Chain, Roller, #40, 056 Pitches, O-Ring, 2-3
Channel Wldt, Bumper, 3-23
Channel Wldt, Lift Lh, 3-3
Channel Wldt, Lift Rh, 3-3
Channel Wldt, Mtg, Spring, 2-35
Channel, Brake [6100], 2-29
Channel, Brake, Link, Upper (Replaced by 377411), 2-25
Channel, Mtg, Sidebrush, 2-49, 2-51, 3-19, 3-21
Channel, Roller, Battery Case, 3-23
Channel, Step (Japan Only), 2-7
Channel, Step, TJ [Gray] (Japan Only), 2-7
Charger 36V/20A/60Hz/1Ph/115V, 4-12
Charger 36V/30A/60Hz/1Ph/115V, 4-13
Charger Kit, 36vdc 021a, 1ph,Domestic,Ci, 3-39
Charger Kit, 36vdc, Ci[Export/Euro/Asia], 3-39
Charger, DC36V-25A, AC100V, 50/60Hz, 3-40
Charger, DC36V-40A, AC200V, 50/60Hz, 3-40
Charger, 36V, 20A, 50Hz/1Ph/230V (See Breakdowns), 3-39
Charger, 36V, 20A, 50Hz/1Ph/245V (See Breakdowns), 3-39
Charger, 36V, 30A, 50Hz/1Ph/230V (See Breakdowns), 3-39
Charger, 36V, 30A, 50Hz/1Ph/245V (See Breakdowns), 3-39
Charger, 36V/20A 50H/ Ph 230V, 4-14
Charger, 36V/20A 50H/1Ph 245V, 4-15
Charger, 36V/20A/60Hz/1Ph/115V (See Breakdowns), 3-39
Charger, 36V/30A 50H/1Ph 230V, 4-16
Charger, 36V/30A 50H/1Ph 245V, 4-17
Charger, 36V/30A/60Hz/1Ph/115V (See Breakdowns), 3-39
Charger, 36vdc 21a 85-265vac 1ph 45/65h, 3-39
Charger, 36vdc 21a 85-265vac 1ph 45/65hz, 3-39
Circuit Breaker, 4-12, 4-14, 4-15, 4-16
Circuit Breaker (Obsolete, Replaced by None), 4-17
Circuit Breaker 15A, 4-12
Circuit Breaker 20A/AC, 4-13
Circuitbreaker Kit, 20a, Replmt, Ci, 3-9
Circuitbreaker Kit, 25a, Replmt, Ci, 2-15
Circuitbreaker Kit, 40a, Replmt, Ci, 3-13
Circuitbreaker, 15.0a, Resetable, 3-42
Circuitbreaker, 10A, 2-13, 2-15
Circuitbreaker, 10a, Resetable, 2-13, 2-15, 2-17
Circuitbreaker, 15A, 3-29, 3-31, 3-33
Circuitbreaker, 15a, Resetable, 3-29, 3-31, 3-33, 3-42
Circuitbreaker, 2.5a, Resetable, 2-13
Circuitbreaker, 20.0a, Resetable, 3-9
Circuitbreaker, 25.0a, Resetable, 2-15, 2-17, 3-9
Circuitbreaker, 40.0a, Resetable, 3-13
Circuitbreaker, 50.0a, 3-13
Circuitbreaker, 5A, 2-13
Clamp, 4-3
Clamp, Cable, 2-7, 2-9, 2-13, 2-15, 2-17, 2-21
Clamp, Cable, Nyl, 0.62d, Nat, 3-47
Clamp, Cable, Stl, 0.56d X 0.38w, 1h, 2-23
Clamp, Cable, Stl, 0.69d X 0.62w, 1h, 2-23
Clamp, Strap, 2-7
Clip, 2-49, 2-51, 3-19, 3-21
Comm. Bracket, 4-3, 4-5
Condenser, 4-14, 4-15
Condensor 12.5Mfd (Obsolete, Replaced by None), 4-16
Connector, 2 Conductor, 4-3, 4-5
Connector, Battery, 6ga 50a, Gray[2cont], 2-61, 3-25, 3-39, 4-12, 4-13, 4-14, 4-15, 4-16, 4-17
Connector, Fem, 2cav [Mp630 Sealed], 4-6, 4-7, 4-8, 4-9, 4-10, 4-11, 4-20, 4-21
Console, Instrument, Ev, 2-13
Contact, Switch, 2-13
Contactor, 2-15, 2-17
Contactor, 36vdc, 100a, Sp N/O, 3-9, 3-13
Control Assy, 4-14, 4-15, 4-16, 4-17
Control Box Assy Kit, Replmt, Telem[INTL], 3-47
Control Box Assy Kit, Replmt, Telem[USA], 3-47
Control Circuit, 4-12
Control Circuit 36V/30A, 4-13
Control Transformer, 4-14, 4-15, 4-16, 4-17
Controller Kit, Heavy Duty, 3-48
Controller, Motor, 36vdc 60a [Curt 1203], 2-15
Controller, Motor, 36vdc 90a [Curt 1235], 2-15, 2-17
Controller, Propel, 36Vdc, 90 Amp, 3-48
Cord Assy A.C., 4-12, 4-13
Cord Assy D.C., 4-12, 4-13
Cord Assy, Motor, 2-21
Cord, Ele, Chrgr [European], 3-39
Cord, Ele, Chrgr [Onboard], 3-39
Coupling, Vac Wand, 3-5
Coupling, Vac-Wand, 3-5
Cover, Cooling Fan, 3-7, 3-11
Cover, Elec, Connection, 4-19
Cover, Front [Teal], 2-7
Cover, Side, Lh [Teal], 2-7
Cover, Side, Rh [Teal], 2-7
Cuff, Hose, 3-5

D

D.C.Cord Set Wo/Plug, 4-14, 4-15
D.C.Cordset W/Plug, 4-16, 4-17
D.C.Strain Relief, 4-12, 4-13, 4-14, 4-15, 4-16, 4-17
Diode (Obsolete, Replaced by None), 4-16, 4-17
Diode, Electric Plug, 2-77, 3-9, 3-13
Disc, 4-3
Disc Wldt, Brake 8.0 Dia X .18, 2-21
Dolly, Battery Kit, 3-27
Door Wldt, Box, Vac Wand [Gray], 3-7, 3-11
Door Wldt, Vac Wand, 3-7, 3-11
Duct, Pvc, 0.40 X 0.75 0.40l, 2-23
Duct, Vinyl, 3-29, 3-31, 3-33

E

Extinguisher Kit, 6100, 3-45
Extinguisher, Fire, 3-45

F

Fan, 4-3, 4-5
Fan Assy, Vacuum (See Breakdowns), 3-7, 3-11
Fan Assy, Vacuum (See Breakdowns) (Replaced by 9004054), 3-7, 3-11
Fan, Vacuum, 4-3, 4-5
Fan, Vacuum, 5.7d, 036vdc, 3 Stage, 3-7, 3-11
Fan, Vacuum, 5.7d, 036vdc, 3 Stage [Pkrd], 3-7, 3-11
Filter, Panl, Dust, 4.2 X 13.3 X 21.0, 2-3, 2-4, 2-59
Filterbox Assy W/ Label [Gray], 2-55
Filterbox Assy W/ Label, Tj [Gray] (Japan Only), 2-55
Fitting, Grease, 2-19
Fitting, Grease, Str Pm04 .47l, 2-23
Flap, Strainrelief, 2-23
Frame Wldt, Mtg, Roller, 3-27
Frame Wldt, V-Mop, 3-3
Frame, Batt Cart, 7200, 3-27
Frame, Wldt, Main [Gray], 2-7
Frame, Wldt, Main, Swpr, 2-7
Fuse, 2-15, 2-17
Fuse, 002A, 250Vdc, Cartridge, 3-47
Fuse, A.C. 10 Amp, 4-14, 4-15
Fuse, A.C. 15 Amp (Obsolete, Replaced by None), 4-16, 4-17
Fuse, D.C. 80Amp, 4-13

G

Gasket, 2-13
Gasket, Door, 3-7, 3-11
Gasket, Filter Panel, 2-59
Gauge Kit, Hourmeter, F/31988 [10k], 2-13
Gauge, Discharge, Battery, 36vdc, Led, 2-13
Gauge, Hourmeter, 05-277Vdc/Vac, 2-Hole, 2-13
Gearbox, Wheel, 250mm, 36vdc Band Brake, 4-19
Gearbox, Wheel, 250mm, 36vdc Band Brake (See Breakdowns), 2-23
Gearbox, Wheel, Front, 250mm, 4-18
Gearbox, Wheel, Front, 250mm (See Breakdowns) (Replaced by 391462), 2-23
Grip, Handle, 3-27
Grip, Handle, Round, 3-27
Grommet, Rbr, 0.89id, F/ 1.2h, .14matl, 2-31
Grommet, Rbr, 2.13id, F/2.5h, .12 Matl, 3-47
Grommet, Rubber, 2-7, 2-55, 3-9, 3-13, 3-29, 3-33
Grommet,Nylon, .75Id,1.00Dmtg, 3-27
Guard Wldt, Light W/ Alarm [Gray], 3-29
Guard Wldt, Light, Revl/Flsh, 3-29, 3-33
Guard, Chain, 2-21
Guard, Fan Sheave, 2-53
Guard,Sidebrush, 2-49, 2-51, 3-19, 3-21
Guide, Brushholder, Slip Ring [Amer], 4-19

H

Handel Wldt, Batt Cart, 3-27
Handle, 2-45, 2-47
Handle Wldt, 2-43
Handle, Hopper, (Painted), 2-57
Handle, Hppr [Gray], 2-57
Harness, Cable, Battery, 2-61, 3-25
Harness, Cable, Battery, Main, 2-61
Harness, Ele [Telemetry, 6100e], 3-47
Harness, Main [6100], 2-23, 2-77
Harness, Pedal, 2-31
Harness, Shaker, 2-59
Harness, Wire, Controller, 2-15, 3-48
Harness, Wire, Main 6100 Std, 2-77
Harness, Wire, Vac Wand, 3-7, 3-11
Harness, Wire, Warning/Backup, 3-29, 3-31, 3-33
Hinge, 2-7, 3-7, 3-11
Hinge, Seat Support, 2-9
Holder, Fuse Ac, 4-14, 4-15, 4-16, 4-17
Hopper, Rear, 2-57
Horn, 2-7
Hose, Flex, 2-3, 3-5
Housing, 4-3, 4-5
Housing Assy, Bearing, 2-11
Housing Wldt, Bearing, Wheel, 2-21
Housing Wldt, V-Mop, 3-3
Housing Wldt, Wheel, Front, 2-19
Housing Wldt, Wheel, Rear, 2-33
Housing, Bearing, 2-3, 2-53
Housing, Belt, Front, Machinin, 2-21
Housing, Brg, Vacfan, 2-3, 2-4

I

Impeller, 9.06 D X 0.375 B, 2-53
Instr, Mach, Use And Care [6100], 2-9, 3-51
Instr, Mach, Wall Chart [6100], 3-51
Insulation, Acoustic, 2-53
Insulator, Panel & Switchboard, 2-15, 2-17

J

Joint, U, 0.75id, 2-11

K

Key, Ignition Switch, 2-13
Key, Sq, 0.19 X 0.19, 1.00l, 4-6, 4-7, 4-20, 4-21
Key, Sq, 0.19 X 0.19, 1.50l, 4-8, 4-9, 4-10, 4-11
Key, Square, 2-11, 2-21, 2-43, 2-53
Key, Woodruff, 2-11
Key, Woodruff, 0.19 0.75 [Asa0606], 2-21
Keychain, Rectangle, Parts & Service, 2-13
Kit, Bearing, Motor, Ele [Magnetek], 4-6, 4-8, 4-10
Kit, Bearing, Motor, Ele, Hd [F/375175], 4-7
Kit, Brush, Cover, 4-18
Kit, Brush, Motor, 4-18
Kit, Brush, Motor, Ele [Magnetek], 4-6, 4-7, 4-8, 4-9, 4-10, 4-11
Kit, Ci, Tire, Non Marking, 3-44
Kit, Door, Brush, 2-7
Kit, Fan, Vac Fan Offset, 3-7, 3-11
Kit, Maint, 800hr [6100 E], 2-4
Kit, Perf, Sweeper, [6100e], 2-3
Kit, Replmt, Bearing, Vacuum Fan, [6100], 2-3, 2-4
Kit, Replmt, Knob Assy, [6100], 2-3, 2-4
Kit, Replmt, Stator Assy, Brake, Disc, 2-3, 2-4
Kit, Seal, Hppr [6100], 2-4
Kit, Tire, Non Marking, 3-43
Knob, 3-3
Knob Assy, 2-3, 2-41
Knob, 2.38D .88H M6 Insert, 3-23
Knob, M8X1.25 Insert, 2-41
Knob, Round, Press On .50, 2-43, 2-45, 2-47

L

Label Set, Info/Hzrd, Tj [6200] (Japan Only), 2-78
Label Set, Oper. 6100 Ev, 2-78
Label Set,Info&Hzd 6100, 2-78
Label, Battery, Japan (Mounted on Battery), 2-78
Label, Logo [6100, Teal], 2-78
Label, Logo, 10.5l White / Tl [Tennant], 2-7
Label, Opertnl, Telem [Fcc/Ic], 3-47
Label, Tag, Battery [Hydrolink Watering], 3-36
Latch, 2-7
Latch, Door, 3-3
Lens,Flashing Lite Fr207 Amber, 3-29, 3-33
Lens,Flashing Lite Fr207 Blue, 3-29, 3-33
Lens,Flashing Lite Fr207 Red, 3-29, 3-33
Lever, Accelerator, 2-31
Lever, Recirc Adj, 2-37
Light Kit, Flsh Lrc 36V, 3-29
Light, Flsh, 12vdc, Amb, Rwk, 3-29, 3-33
Light, Led, 36vdc, 4.8d [Sealed Beam], 3-42
Link, Brake, 2-25, 2-29
Link, Brake, Flt Rep.by392968, 2-27
Link, Brake, Upper, 2-29
Link, Brake, Upper (Replaced by 377411), 2-25
Link, Brush Arm, 2-43
Link, Chain, 2-11, 2-21
Linkage Kit, Brake, Replmt, 2-27, 2-35
Lintel Wldt, Rear, 2-9
Lintel Wldt, Rear [Gray], 2-9
Lock Wldt, Lh, Batt Cart, 3-27
Lock Wldt, Rh, Batt Cart, 3-27
Lock, Floor, 3-27

M

Manual, Operator [6100 Ele, Jp], 3-51
Manual, Operator [6100 Ele, Na], 3-51
Manual, Oprtr, 6100E Es Na, 3-51
Manual, Oprtr, 6100E Fr Na, 3-51
Manual, Parts [6100 Na/Intl], 3-51
Manual, Service, 6100E, 3-51
Molding Kit, Side, 3-41
Molding, Afmkt, Trim, Pvc, .08 .11, 01ft, 3-47
Molding, Trim 11-14Ga 8.50, 2-7
Molding, Trim 11-14Ga 19.0, 2-9
Molding, Trim 11-14Ga 8.50, 2-15, 2-17
Mop, Dust, 3-3
Mop, Dust, Industrial, 3-3
Motor, .6 Hp, 36V, 1800 Rpm (See Breakdowns) (Replaced by 374266), 2-43
Motor, .75 Hp, 36V, 2500Rpm (See Breakdowns) (Replaced by 374268), 2-21

Motor, .75Hp, 36V, 2500Rpm (See Breakdowns) (Replaced by 374201), 2-53
Motor, Ele, 36vdc 0.08hp 0068rpm 04.5a, 2-49, 2-51, 3-19, 3-21
Motor, Ele, 36vdc 0.60hp 1800rpm, 4-9
Motor, Ele, 36vdc 0.60hp 1800rpm . A, 4-8
Motor, Ele, 36vdc 0.60hp 1800rpm (See Breakdowns) (Replaced by 1055614), 2-43
Motor, Ele, 36vdc 0.75hp 2500rpm, 4-11
Motor, Ele, 36vdc 0.75hp 2500rpm . A, 4-7, 4-10
Motor, Ele, 36vdc 0.75hp 2500rpm (See Breakdowns), 2-21
Motor, Ele, 36vdc 0.75hp 2500rpm (See Breakdowns) (Replaced by 1053284), 2-53
Motor, Ele, 36vdc 1800rpm 0.60hp, 2-43, 4-21
Motor, Ele, 36vdc 2500rpm 0.75hp, 4-20
Motor, Ele, 36vdc 2500rpm 0.75hp (See Breakdowns), 2-53
Motor, Ele, 36vdc, Rep By 374201, 4-6

N

Nozzle, Vac Wand, 3-5
Nut, 4-3, 4-5
Nut Hex, Std, M03-0.5, 2-61
Nut-Hx Std M10X1.25, 3-27
Nut, Hex, Flange M06-1.00, 3-7
Nut, Hex, Flange, M06-1.0, 2-13
Nut, Hex, Flange, M06-1.00, 3-11
Nut, Hex, Flange, M08-1.25, 2-7, 2-13, 3-7, 3-11, 3-29, 3-31, 3-33
Nut, Hex, Flange, M10-1.5, 3-5
Nut, Hex, Flexlock, .31-18, 2-61, 3-7, 3-11, 3-25
Nut, Hex, Flexlock, .31-24, 2-53
Nut, Hex, Jam, .31-24, 3-9, 3-13
Nut, Hex, Lock, .25-20, Nl, 2-31, 2-35, 3-23
Nut, Hex, Lock, .25-28, Nl, 2-31
Nut, Hex, Lock, .31-18, Nl, 2-25, 3-38
Nut, Hex, Lock, .38-16, Nl, 2-43
Nut, Hex, Lock, M04-0.7, Nl, 2-15, 2-17, 2-55, 3-3, 3-48
Nut, Hex, Lock, M05-0.8, Nl, 2-15, 2-17, 2-41, 3-9, 3-13, 3-45
Nut, Hex, Lock, M05-0.8,Nl, 3-29, 3-33
Nut, Hex, Lock, M06 X 1.0, Nl, 2-27
Nut, Hex, Lock, M06 X 1.0, Nl, Ss, 2-3, 2-23, 2-27, 2-29
Nut, Hex, Lock, M06-1.0, Nl, 2-9, 2-13, 2-25, 2-31, 2-45, 2-47, 2-53, 2-55, 2-57, 2-59, 3-5, 3-27
Nut, Hex, Lock, M06-1.0, Nl,Ss, 2-7, 2-37, 2-39, 2-49, 2-51, 3-19, 3-21
Nut, Hex, Lock, M08 X 1.25,Nl, 2-31
Nut, Hex, Lock, M08 X 1.25,Nl, Ss, 2-4
Nut, Hex, Lock, M08-1.25,Nl, 2-11, 2-21, 2-33, 2-37, 2-39, 2-45, 2-47, 2-53, 3-3, 3-5, 3-15, 3-17, 3-23, 3-27, 3-43, 3-44
Nut, Hex, Lock, M08-1.25,Nl,Ss, 2-39
Nut, Hex, Lock, M10 X 1.5, Nl, 2-35
Nut, Hex, Lock, M10-1.5, Nl, 2-31, 2-39, 2-41, 2-43, 3-3, 3-5, 3-23, 3-27
Nut, Hex, Lock, M12-1.75,Nl, 2-11, 2-21, 2-33, 2-49, 2-51, 3-19, 3-21, 3-37
Nut, Hex, Lock, M12-1.75,Nl,Ss, 2-41
Nut, Hex, Lock, M5 X 0.8, Nl, 3-29, 3-33
Nut, Hex, Lock, M5 X 0.80, Nl, 3-47
Nut, Hex, Sltd, 1.25-12, 2-23
Nut, Hex, Std, .25-20, 2-15, 2-17
Nut, Hex, Std, .25-28, 2-31
Nut, Hex, Std, .31-24, 2-15, 2-17
Nut, Hex, Std, .50-13, Lh, 2-43
Nut, Hex, Std, #10-32, G2, 2-15, 2-17, 3-9, 3-13
Nut, Hex, Std, M03-0.5, 2-13, 2-45, 2-47
Nut, Hex, Std, M08-1.25, 3-3
Nut, Hex, Std, M10 X 1.5, 2-31
Nut, Hex, Std, M10-1.5, 3-3
Nut, Hex, Std, M12-1.75, 3-27
Nut, Hex, Thin, .38-32, 2-31
Nut, Hexslot 1.25-12, 2-19
Nut, Wheel, .44-20 X 60 Angle, 2-21, 3-43

P

Pad, Pedal, Brake, 3.9 2.4 0.75t, 2-35
Paint, Airdry, Blk, 12oz, 2-4
Paint, Airdry, Gray, 12oz [Enamel], 2-4
Paint, Airdry, Iron Gray,12oz[Pwdr Coat], 2-4
Paint, Airdry, Off-white, 12oz, 2-4
Paint, Airdry, Teal, 12oz, Solid, 2-4
Panel Assy, Filter, 2-59
Panel Weldt, Filter, 2-59
Panel Wldt, Fltr [Gray], 2-59
Panel Wldt, Shaker, 2-59
Panel, Instmt, Ele [Gray], 2-13
Panel, Perma-Filter, 2-59
Panel, Perma-Filter [Gray], 2-59
Panel, Screen, Vac Wand [Gray, 3-7, 3-11
Panel, Seat Support, 2-9
Pedal Assy, Propel, 12vdc, 2-31
Pedal Kit, Propel, 12vdc, 2-31
Pedal Wldt, 2-39
Pedal Wldt, Brake, 2-35
Pedal, Accelerator, 2-31
Pedal, Brake, Lock, 2-35
Pedestal, 3-29, 3-31, 3-33
Pedestal, Light/Alarm [Gray], 3-29, 3-31, 3-33
Pin, 2-49, 2-51, 3-19, 3-21
Pin Kit, Retainer, Snap Rings, 4-19
Pin, Axle, Rear, 2-33
Pin, Brake, 2-27
Pin, Clevis, 2-25, 2-31, 2-43, 2-49, 2-51, 2-59, 3-3, 3-19, 3-21, 3-27
Pin, Clevis, .31 Dia X 1.75 Lg, 2-7
Pin, Clevis, 0.19 D X 1.00l, 2-27, 2-29
Pin, Clevis, 0.37 D X 1.50l, 2-35
Pin, Clevis, 0.37d X 2.00l, 2-35
Pin, Clevis, 0.38 D X 1.13l, 2-29
Pin, Clevis, 0.50 D X 3.75l, 2-35
Pin, Cotter, 2-25, 2-31
Pin, Cotter, .062 X 0.50, 2-27, 2-29
Pin, Cotter, .094 X 0.75, 2-35
Pin, Cotter, .125 X 1.00, 2-29, 2-35
Pin, Cotter, Hair, 0.38d .093 Wir, 2-49, 3-19
Pin, Dowel .250 X 1.000, 2-21
Pin, Hair Cotter, 2-51, 3-3, 3-21, 3-27
Pin, Hair, Cotter, 0.62d .120 Wir, 2-49, 3-19
Pin, Haircotter, 3-27
Pin, Haircotter .31D .058Wire, 2-59
Pivot, Motor, 2-43
Plate Assy, Seat W/Label, 2-9
Plate Assy, Seat W/Label (Japan Only), 2-9
Plate Wldt, Cover, 2-21
Plate Wldt, Directional Control, 2-31
Plate Wldt, Swivel, 2-19, 2-23
Plate, Adapter, Wheel, 2-23
Plate, Arm Adj, 2-41
Plate, Brush Lift, 2-41
Plate, Cover, 3-7
Plate, Cover, Belt, 2-21
Plate, Cover, Hole, Vacfan [Gray], 3-7
Plate, Door, Brush, 2-7, 2-43
Plate, Door, Brush, Lh [Gray], 2-7
Plate, Door, Brush, Rh [Gray], 2-7
Plate, Housing, Bearing, 2-53
Plate, Inlet, Fan (Painted), 2-53
Plate, Latch, 3-3
Plate, Link, Flap, 2-39
Plate, Sidebrush Lift, 2-45, 2-47, 3-15, 3-17
Plate, Spacer, Caster, 3-27
Plate, Swivel, 2-19
Plate, Swivel, Bottom, 2-23
Plug, 2-13
Plug Wldt, 2-41
Plug, Brush Drive, Splined, 2-43
Plug, Brush, Drive, 2-41
Potentiometer Assy, Electronic, 2-31
Pouch, 2-9
Power Tran, 4-15
Power Transformer, 4-17
Power Transformer (Obsolete, Replaced by None), 4-16
Propel Cable, Repair, Afmkt [6100], 2-23
Pulley, 2-43
Pulley, Cable, 1.5d, Nyl, 2-45, 2-47, 3-15
Pulley, Cable, 1.5d, Nyl, 3-17
Pump Kit, Fill, Battery, 3-36
Pump Kit, Fill, Battery,36vdc,Ci[Trojan], 3-36

Q

Quick Mop Kit, 6100, 3-3

R

Rail, 3-38
Rectifier Assy, 4-12, 4-13
Rectifier Scr 20A, 4-12
Relay, 36vdc, 100a, Sp N/O, 2-15, 2-17
Relay, 36Vdc, 9A, Spdt, 3-31, 3-33
Retainer, 2-39, 2-41, 2-43
Retainer, Flap, 2-37
Retainer, Recirc, Flap, 2-37
Retainer, Recirculation Flap, 2-37
Retainer, Spring, 2-31
Ring, Brush Holder, 4-19
Ring, Retaining, 32Mm, 2-43
Ring, Retaining, Ext, 0.38d, [Selflock], 2-3, 2-4, 2-53
Ring, Snap, Motor, Ele [Magnetek], 4-6, 4-8, 4-10
Rivet, Plstc, 3-45
Rivet, Pop, 2-55, 2-59, 3-41
Rod Wldt, Vac Wand, 3-5
Rod Wldt, Vac Wand [Gray], 3-5
Rod, Handle [Gray], 3-5
Rod, Propelling, 2-9
Rod, Thread, 2-31
Rod, Threaded, 2-15, 2-17
Rod, Threaded (Obsolete, Replaced by None), 3-3
Rod, Threaded, M6 X 1.50 Lg, 3-23
Roller Assy, 24 In, Batt Cart, 3-27
Rotor, Brake, 14mm (Obsolete, Replaced by None), 4-18

S

Scr Hex M12X1.75 20, 2-45, 2-47, 3-15, 3-17
Scr Pan M6 X 1.0 16, 2-9
Scr-Butn M12X1.75 25 Nylonlo, 2-19
Scr-Hex M 8X1.25 60 Full Thd, 3-3
Scr-Pan 12 X .50 F/Plst Pl, 2-7
Scr-Shld .375 X 1.50L .31-18, 2-25
Screen Wldt, Vac Wand [Gray], 3-7, 3-11
Screen, Vac Wand, 3-7, 3-11
Screw, 4-3
Screw, Set, .25 -20 X .25, 2-11
Screw, Btn, M08 X 1.25 X 25, Ss, 2-4
Screw, Btn, M12 X 1.75 X 25, 10.9 Nl, 2-23
Screw, Btn, M8 X 1.25 X 35, Ss, 2-39
Screw, Flat, M06 X 1.0 X 16, 10.9, 2-27
Screw, Flat, M08-1.25X 25, Ss, 2-43
Screw, Flat, M10-1.5 X 35,10.9, 2-39
Screw, Flt, M08 X 1.25 X 16, 10.9, 2-3
Screw, Flt, Soc, M8 X 1.25 X 25, 10.9, 2-37
Screw, Hex 6X 1.0 16 Pltd, 2-7, 2-19
Screw, Hex, .25-20 X 0.38, G5, 2-15, 2-17
Screw, Hex, .25-20 X 0.50, G5, 2-15, 2-17
Screw, Hex, .25-20 X 1.25, 5, 2-21
Screw, Hex, .25-20 X 1.25, G5, 2-31, 3-23
Screw, Hex, .31-18 X 0.75, G5, 2-9
Screw, Hex, .31-18 X 1.00, G5, 2-9
Screw, Hex, Fmg, M06-1.0 X 10, 2-9
Screw, Hex, Fmg, M06-1.0 X 12, 2-9, 2-21, 2-31
Screw, Hex, Fmg, M06-1.0 X 12 (Japan Only), 2-7
Screw, Hex, Fmg, M06-1.0 X 25, 2-7, 2-37, 2-53
Screw, Hex, M04-0.7 X 12, 8.8, 2-55
Screw, Hex, M05-0.8 X 12, 8.8, 3-31, 3-33, 3-45
Screw, Hex, M05-0.8 X 16, 8.8, 3-5
Screw, Hex, M05-0.8 X 12, 8.8, 2-41
Screw, Hex, M05-0.8 X 20, 3-29, 3-33
Screw, Hex, M06 1.0 X 20, 2-13
Screw, Hex, M06 X 1.0 X 12, Fmg, 2-31
Screw, Hex, M06 X 1.0 X 16, Fmg, 2-3, 2-23
Screw, Hex, M06 X 1.0 X 16, Ss, 2-23
Screw, Hex, M06 X 1.0 X 20, Ss, 2-27, 2-29
Screw, Hex, M06 X 1.0 X 25, Fmg, 2-3, 2-23
Screw, Hex, M06-1.0 X 12, 8.8, 2-7
Screw, Hex, M06-1.0 X 12, Ss, 2-53
Screw, Hex, M06-1.0 X 16, 8.8, 2-9, 2-55, 3-7
Screw, Hex, M06-1.0 X 16, Ss, 2-51, 3-19
Screw, Hex, M06-1.0 X 20, 8.8, 2-9, 3-5
Screw, Hex, M06-1.0 X 20, Ss, 2-57
Screw, Hex, M06-1.0 X 25, 8.8, 2-45, 2-47
Screw, Hex, M06-1.0 X 30, 8.8, 3-7, 3-11
Screw, Hex, M06-1.0 X 40, 8.8, 3-27
Screw, Hex, M06-1.0 X 100, Ss, 3-7, 3-11
Screw, Hex, M06-1.0 X 12, 2-53
Screw, Hex, M06-1.0 X 16, 8.8, 2-53, 2-61, 3-11
Screw, Hex, M06-1.0 X 16, Ss, 2-49, 3-21
Screw, Hex, M06-1.0 X 20, 8.8, 2-25, 2-43, 2-59, 3-7
Screw, Hex, M06-1.0 X 25, 8.8, 2-25, 2-31
Screw, Hex, M06-1.0 X 30, 8.8, 2-59
Screw, Hex, M06-1.00 X 12, 3-7, 3-11
Screw, Hex, M08 X 1.25 X 55, Ss, 2-23
Screw, Hex, M08 X 1.25 X 60, Ss, 2-27
Screw, Hex, M08-1.25 X 16, 8.8, 2-7, 2-13, 2-21, 3-29, 3-31, 3-33
Screw, Hex, M08-1.25 X 16, Ss, 3-27
Screw, Hex, M08-1.25 X 20, 8.8, 2-7, 2-21, 2-39, 2-43, 2-53, 3-23
Screw, Hex, M08-1.25 X 25, 8.8, 2-21, 2-33, 2-41, 2-45, 2-47, 3-43, 3-44
Screw, Hex, M08-1.25 X 25, Ss, 2-21, 3-27
Screw, Hex, M08-1.25 X 30, 8.8, 2-45, 2-47, 3-15, 3-17, 3-23
Screw, Hex, M08-1.25 X 40, 8.8, 2-57
Screw, Hex, M08-1.25 X 45, 8.8, 3-15, 3-17
Screw, Hex, M08-1.25 X 50, 8.8, 2-53, 3-5
Screw, Hex, M08-1.25 X 70, 8.8, 2-57
Screw, Hex, M08-1.25 X 80, 8.8, 2-37
Screw, Hex, M08-1.25 X150, 8.8, 2-39
Screw, Hex, M10 X 1.5 X 35, 8.8, 2-31
Screw, Hex, M10 X 1.5 X 45, 8.8, 2-23
Screw, Hex, M10 X 1.5 X 30, 8.8, 2-35
Screw, Hex, M10-1.5 X 20, 8.8, 3-23
Screw, Hex, M10-1.5 X 25, 8.8, 3-3, 3-5, 3-7, 3-11, 3-27
Screw, Hex, M10-1.5 X 30, 8.8, 3-27
Screw, Hex, M10-1.5 X 35, 8.8, 3-23
Screw, Hex, M10-1.5 X 45, 8.8, 3-5
Screw, Hex, M10-1.5 X 90, Fl, 3-3
Screw, Hex, M10-1.5 X 30, 8.8, 2-11, 2-43
Screw, Hex, M10-1.5 X 60, 8.8, 2-31, 2-41
Screw, Hex, M12-1.75 X 25, 8.8, 2-49, 2-51, 3-19, 3-21, 3-37
Screw, Hex, M12-1.75 X 30, 8.8, 2-19
Screw, Hex, M12-1.75 X 50, Fl, 3-27
Screw, Hex, M12-1.75 X 60, 8.8, 2-49, 2-51, 3-19, 3-21
Screw, Hex, M12-1.75 X120, 8.8, 2-41
Screw, Hex, M5 X 0.8 X 10, Fmg, 2-35
Screw, Hex, M5 X 0.8 X 16, Fmg, 2-35
Screw, Hex, M6 X 1.0 X 20, 8.8, Nl, 2-35
Screw, Hex, M6 X 1.0 X 40, Ss, 2-29
Screw, Hex, M6 X 1.00 X 100mm, Ss, 3-7, 3-11
Screw, Hex, M6 X 1.00 X 110mm, Ss, 3-7, 3-11
Screw, Hex, M6 X 1.00 X 16, Fmg, 2-37
Screw, Hex, M6 X 1.00 X 25, Fmg, 2-31
Screw, Hex, M8 X 1.25 X 60, 8.8, 2-29
Screw, Pan, #08-32 X 0.50, G1, 2-15
Screw, Pan, #08-32 X 0.88, G1, 3-9, 3-13
Screw, Pan, #12- X 0.50, 2-13
Screw, Pan, 12-16 X 0.50, F/ Plstc, 3-47
Screw, Pan, M03-0.5 X 12, 4.8, 2-13
Screw, Pan, M03-0.5 X 25, 4.8, 2-45, 2-47
Screw, Pan, M03-0.5 X 30, 4.8, 2-61
Screw, Pan, M04 X 0.7 X 20, Ss, 3-3
Screw, Pan, M04-0.7 X 16, 4.8, 3-48
Screw, Pan, M04-0.7 X 10, Ss, 2-59, 3-3
Screw, Pan, M04-0.7 X 16, 4.8, 2-15, 2-17
Screw, Pan, M05-0.8 X 16, 4.8, 3-9, 3-13
Screw, Pan, M05-0.8 X 16, 4.8, 2-15, 2-17
Screw, Pan, M06-1.0 X 20, 4.8, 2-13
Screw, Pan, M06-1.0 X 12, Ss, 2-7
Screw, Pan, M08-1.25X 20, 4.8, 2-11

Screw, Pan, M5 X 0.8 X 6, 4.8, 3-31, 3-33
Screw, Pan, M5 X 0.8 X 20, 4.8, 3-29, 3-31, 3-33
Screw, Pan, Phl, .31-18 X 1.00, G2, 3-38
Screw, Pan, Phl, .31-18 x 1.50, G2, 3-38
Screw, Pan, Phl, M5 X 0.80 X 16, 4.8, 3-47
Screw, Pan, Phl, M5 X 0.80 X 20, 4.8, 3-47
Screw, Pan, Phl, M6 X 1.00 X 20, 4.8, 2-37
Screw, Set, .25-20 X 0.31, Soc, 2-21
Screw, Set, .25-20 X 0.31, Soc, 2-21
Screw, Set, .31-18 X 0.38, Nl, 2-11
Screw, Set, #10-32 X 0.38,, 3-3
Screw, Set, M06-1.0 X 8, Nl, 2-53
Screw, Set, M06-1.0 X 16, 45H, 2-53
Screw, Set, M06-1.0 X 8, Nl, 2-43
Screw, Soc, M08 X 1.25 X 16, 12.9, 2-31
Screw, Soc, M08-1.25 X 16, Al, 2-39
Screw, Wheel Mount, 4-19
Seal Kit, Hopper, 2-59
Seal Kit, Hopper, 6100, 2-3
Seal, Afmkt, Rbr, Clsd, Adh, 03ft, 2-9
Seal, Bulb .38 X .75 X 22.62Lg, 2-3, 2-59
Seal, Bulb .50 X .50 X 9.19Lg, 2-3, 2-59
Seal, Bulb, .50th, .50w X 09.19l, 2-4
Seal, Bulb, Str, .38th, 0.75w X 22.6l, 2-4
Seal, Bulb, Str, 0.76h .93w 23.5l Adh, 2-4
Seal, Fan, 4-3, 4-5
Seal, Foam Rbr, .25 X .50 X 22.63, 2-39
Seal, Foam, Extrusion 23.5, 2-3
Seal, Foam, Extrusion 23.5, 2-59
Seal, Rbr, Clsd, 0.375, 5.0d 2.5h, 3-7, 3-11
Seal, Ring, 2-19, 2-23, 4-18
Seal, Vac Fan, 2-53, 3-7, 3-11
Seat Kit, Slides, 3-38
Seat Kit, Std, Replmt, 2-9
Seat Plate Assy W/Label [Gray], 2-9
Seat Plate Assy W/Label, Tj [Gray] (Japan Only), 2-9
Seat, Std [Milsco], 2-9
Seatbelt Kit 6100, 3-37
Sensor, Pedal Position, 2-31
Shaft, Brush Drive, 2-43
Shaft, Drive, Vacfan (Replaced by1039403), 2-53
Shaft, Drive, Vacfan, .66d 03.4l, 2-3, 2-4, 2-53
Shaft, Intermediate, 2-21
Shaft, Steering, 2-11
Shaft, Steering (Replaced by 391401), 2-11
Shaft, W/ Sprocket, Steering, 2-11
Sheave, 2-43
Sheave, 3L, 2-43
Sheave, 3L,1G,2.011Pd,0.375Id, 2-53
Sheave, 3L,1G,3.519Pd,0.625Id, 2-53
Shell, 4-3, 4-5
Shroud, Front, 6100, 2-7
Shroud, L.H., 2-7
Shroud, R.H., 2-7
Shunt, 050mv 250a, 3-47
Skirt Kit, 6100, 2-37
Skirt Kit, Replmt [6100], 2-3, 2-4
Skirt, Front, 2-3, 2-39
Skirt, Recirculation, 2-3, 2-37
Skirt, Recirculation, Front, 2-3
Skirt, Recirculation, Rear, 2-3
Skirt, Side, 2-3, 2-37
Skirt, Side, Left Hand, 2-3, 2-37
Skirt, Side, Lh, 2-3
Skirt, Side, Rh, 2-3
Skirt, Side, Right Hand, 2-3, 2-37
Sleeve, 2-7, 2-21, 2-25, 2-39, 2-45, 2-47, 2-53, 3-5, 3-15, 3-17
Sleeve, .375B .50D 2.54, 2-37
Sleeve, P/M, 0.437d 0.318b 1.06l 430ss, 2-7
Solenoid Assy, Filter Shaker,, 2-59
Spacer, 2-31, 2-37, 2-41, 2-61, 3-3, 3-35, 4-3, 4-5
Spacer, 0.39B, 0.50D, 0.12L, 2-23
Spacer, Aluminum, 4-19
Spacer, Battery 2.0 X 2.0 X 11, 2-61, 3-35
Spacer, Flanged, 2-39, 2-41
Spacer, Plstc, 0.19b 0.38d 0.38l, Nyl, 3-31, 3-33
Spacer, Rnd, .38b .88d .38l, 3-38
Spacer, Spring, 3-3
Spring, 4-3, 4-5
Spring, Cmpr, .37id X Flat Wir 1.0l, 2-35
Spring, Die .50 Id 1.00 Od 1.25, 2-49, 3-21
Spring, Extension, 2-49, 2-51, 3-3, 3-19, 3-21
Spring, Extn, 0.38od X 0.04wir, 2.3l, 2-35
Spring, Extn, 0.50od X 0.04wir, 3.0l, 2-35
Spring, Extn, 0.50od X 0.05wir, 8.0l, 2-23
Spring, Extn, 0.43od 0.05wir 01.4l, 2-59
Spring, Gas, 3-7, 3-11
Spring, Tension, 2-21, 2-25, 2-39, 2-43, 3-5
Spring, Torsion, 3-3
Spring, Wir, 0.08d, Brake, Parking, 2-35
Spring,Die .50 Id 1.00 Od 1.25, 2-51, 3-19
Sprocket Wldt, Ev, 2-21
Sprocket Wldt, Steering, Drive, 2-23
Sprocket, #40, 10T, 2-21
Sprocket, Steering, 2-11
Sprocket, Steering, Drive, 2-19
Sprocket, Timing, 23T X 25Mm, 2-21
Sprocket, Timing, 80T X 25Mm, 2-21
Stationary Fan, 4-3, 4-5
Strip, Bumper, 3-41
Strip, Control Spring, 2-31
Strip, Link, Brush Lift, 2-43
Strip, Retainer, 2-37
Strip, Retainer, Bumper, 3-41
Stud, Ball, Gas Spring, 3-7, 3-11
Support Wldt, Recirculation, 2-37
Support Wldt, Side Brush, 2-45, 2-47
Support, Seat [Gray], 2-9
Switch Kit, Alarm, Backup [6100], 3-31, 3-33
Switch, Ignition, 2-13
Switch, Pushbutton, 2-13
Switch, Pushmom, Spst100A 12V, 2-13
Switch, Red Stop, 4-12, 4-13
Switch, Rocker, 3-42
Switch, Rocker, Spdt, 3Pos, 3-29, 3-33
Switch, Rocker, Spdt,3 Position, 2-13
Switch, Roller, 3-5, 3-31, 3-33
Switch, Safety, Shutoff, 2-13
Switch, Seat, 2-9
Switch, Seat, No [Delta 6440-04], 2-9
Switch, Snap Actn, 250vdc 25a Spdt, 2-45, 2-47

T

Terminal, Bullet, Mal, .157d, 12ga, 3-42
Terminal, Fem, 10/12ga [Mp630 P2s], 4-6, 4-7, 4-8, 4-9, 4-10, 4-11, 4-20, 4-21
Terminal, Female, 4-3, 4-5
Terminal, Tab, .25 .19h .84l, 3-13
Thermostat, Spdt Switch, 2-55
Tie, Cable 1.75D Max 7.50Lg, 2-7, 2-21, 2-59
Tie, Cable 4.00 Max 14.50Lg, 2-21, 2-53
Tie, Cable, Nyl, 07.3l .19w 1.8 Max D, 3-47
Tie, Cable, Nyl, 11.0l, .14w, 3.0 Max. D, 3-36
Timer, 36vdc, [25hz Pwm, 70 Per Duty], 2-59
Tire & Rim Assy, 2-21
Tire & Rim Assy (Japan Only), 2-21
Tire Assy, Solid, 12.0 X 3.0 4.3bc 6bolt, 3-43, 3-44
Tire Assy, Solid, 12.0 X 3.0 4.3bc 6bolt (Japan Only), 2-33
Tire, Pyu, 250mm, 4-18
Tire, Solid, 250mmx90mm Red, 4-19
Tire, Solid, Non Mark 12X3, 3-43
Transformer, Power, 4-14
Tray, Battery, 2-61
Tread, Floor, Non-Skid, 06.0w X 09.0l (NA Only), 2-7
Tread, Non-Skid, 02.2w 11.5l, 2-7, 2-31
Tread, Non-Skid, 02.2w 11.5l (Japan Only), 2-7
Tread, Non-Skid, 03.0w 11.6l (Japan Only), 2-7
Tread, Non-Skid, 07.0w 08.0l, 2-7
Tube, 0.25id 0.52od 03.2l, Stl, 3-7, 3-11
Tube, 0.25id 0.52od 03.4l, Stl, 3-7, 3-11
Tube, 0.38D 0.17B 0.4L, 2-61
Tube, Axle, 2-57
Tube, Steel .26X.50X3.16L, 3-7, 3-11
Tube, Vac Wand, 3-5
Tube, Water, Battery, 36vdc [Trojan], 3-36

V

Vacuum Fan, 4-3, 4-5
Varistor, 4-12, 4-13, 4-16, 4-17

W

Washer, 2-19, 2-23, 2-33, 2-39, 2-43, 2-59, 3-3, 3-5, 3-23, 3-38, 3-41, 4-3
Washer, .750B 1.5Od .53Foam, 2-21
Washer, Belleville .31 Pltd, 2-21
Washer, Belleville, .25, 2-53
Washer, Belleville, .38, 2-11
Washer, Bellville .50 Pltd, 2-41
Washer, Flat, .25 Hard, 2-9, 2-37, 2-43, 2-53, 2-55, 2-57, 2-59, 3-5, 3-7, 3-11, 3-23
Washer, Flat, .25 Sae, 2-7, 2-15, 2-17, 2-31, 2-61
Washer, Flat, .25 Ss, 2-49, 2-51, 3-19, 3-21, 3-27
Washer, Flat, .25 Std, 2-23
Washer, Flat, .31 Fender, 2-4, 2-37
Washer, Flat, .31 Hard, 2-7, 2-9, 2-13, 2-37, 2-39, 2-41, 2-43, 2-45, 2-47, 2-53, 2-57, 3-5, 3-23, 3-27, 3-38, 3-45
Washer, Flat, .31 Sae, 2-11, 2-15, 2-17, 2-21, 3-9, 3-13, 3-29, 3-31, 3-33, 3-43
Washer, Flat, .31 Ss, 3-27
Washer, Flat, .38 Hard, 3-3, 3-5, 3-7, 3-11, 3-23, 3-27
Washer, Flat, .38 Sae, 2-31
Washer, Flat, .50 Hard, 2-11, 2-45, 2-47, 3-15, 3-17
Washer, Flat, .50 Sae, 2-21, 2-31, 2-33, 2-43, 3-37
Washer, Flat, .75 Sae, 3-27
Washer, Flat, #06, 2-61
Washer, Flat, #08, 2-55, 2-59, 3-9, 3-13
Washer, Flat, #10, 2-13, 2-15, 2-17, 2-35, 3-5, 3-9, 3-13, 3-29, 3-31, 3-33
Washer, Flat, #10 Sae, 3-9, 3-13
Washer, Flat, 0.25 Fender, 2-23
Washer, Flat, 0.25 Sae, 2-29, 2-35
Washer, Flat, 0.31 Ss, 2-29
Washer, Flat, 0.321b 1.00d .12, Ss, 2-7
Washer, Flat, 0.38 Std, 2-29, 2-35
Washer, Flat, 0.50 Sae, 2-35
Washer, Flat, 1/4 Sae, 2-13
Washer, Flat, 10, 3-29, 3-33
Washer, Flat, 10, Ss, 3-47
Washer, Flt, .25 Sae, 2-23
Washer, Flt, .31 Ss, 2-23, 2-27
Washer, Lock, Int, .25, 2-15, 2-17
Washer, Lock, Int, .31, 2-15, 2-17, 3-9, 3-13
Washer, Lock, Int, #04, 2-13, 2-45, 2-47
Washer, Lock, Int, #06, 2-61
Washer, Lock, Int, #08, 2-15
Washer, Lock, Int, #10, 2-15, 2-17, 3-9, 3-13, 3-31, 3-33
Washer, Lock, Int, #10, Ss, 3-31, 3-33
Washer, Neo., 4-3, 4-5
Washer, Neoprene, 3-5
Washer, Thrust, 2-19, 2-23, 3-5
Washer, Wavy, Motor, Ele [Magnetek], 4-6, 4-8, 4-10
Wheel Assy, Rear, Solid, 2-33
Wheel, Bumper 3.0 Od, 2-7
Wheel, Bumper, 4 In Dia, 2-7
Wheel, Hopper, 2-57
Wheel, Steering, 2-11
Worklight Kit, 36V, 6100, 3-42