S30
(Gas/LPG)

(SN/ 000000-006500)

Sweeper
Parts Manual

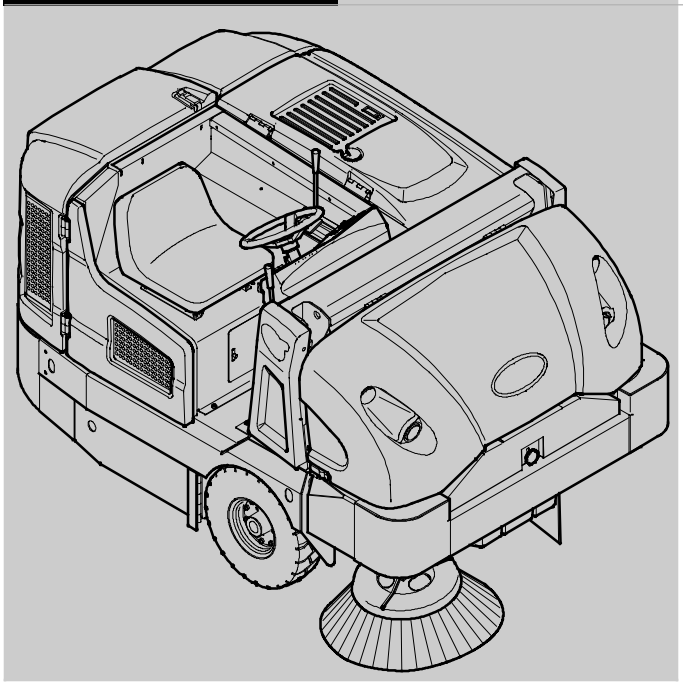

SweepSmart ™ System
Tennant*True*® *Parts*
IRIS® a Tennant Technology

CE

Global

For latest parts manual or other language operator manual, visit:

www.tennantco.com/manuals

9004085
Rev. 10 (8-2014)

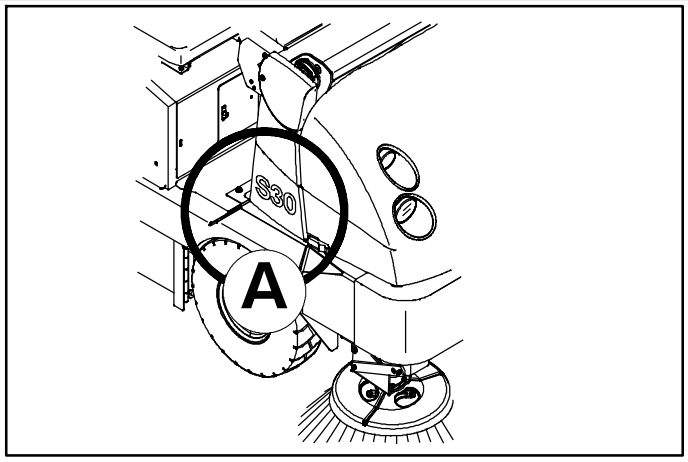

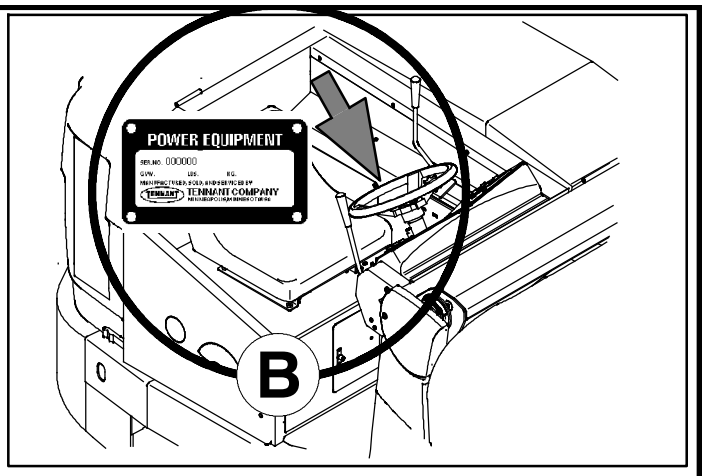

Ref	Part No.	Serial Number	Description	Qty.
1	82681	(000000–)	Bracket Wldt, Lpg Mount	1
▽ 2	63810	(000000–)	Latch Assy, Lpg Tank Mtg, W/Nut	4
▲ 3	51839	(000000–)	Nut Adjustable, Lpg Tank Mtg	2
4	49263	(000000–)	Tie, Cable	3
5	82556	(000000–001039)	Bracket, Vaporizer	1
6	54930	(000000–)	Vaporizer, LPG	1

D

C

EN

HOW TO ORDER PARTS - See diagram above

Only use TENNANT Company supplied or equivalent parts. Parts and supplies may be ordered online, by phone, by fax or by mail.

Follow the steps below to ensure prompt delivery.

1. **(A)** Identify the machine model.
2. **(B)** Identify the machine serial number from the data plate.
3. **(C)** Ensure the proper serial number is used from the parts list.
4. Identify the part number and quantity. Do not order by page or reference numbers.
5. Provide your name, company name, customer ID number, billing and shipping address, phone number and purchase order number.
6. Provide detail shipping instructions.

(D) ▽ - Identifies an assembly
▲ - Identifies parts included in assembly

Please fill out at time of installation for future reference.

Model No. - _____

Serial No. - _____

Machine Options - _____

Sales Rep. - _____

Sales Rep. phone no. - _____

Customer ID Number - _____

Installation Date - _____

Tennant Company
PO Box 1452
Minneapolis, MN 55440
Phone: (800) 553-8033 or (763) 513-2850
www.tennantco.com

Tennant N.V.
Industrielaan 6 5405 AB
P.O. Box 6 5400 AA Uden -
The Netherlands
europe@tennantco.com
www.tennantco.com

テナントカンパニー日本支店
〒210-0916神奈川県川崎市幸区南幸町2-9サンカビル5F
TEL:044-556-1201 FAX:044-556-1202
www.tennant.co.jp

Thermo-Sentry, 1-STEP, EasyOpen, MaxPro2, InstantAccess, II-Speed, Perma-Filter, Duramer, Lower Total Cost of Ownership, Touch-N-Go, and Cab Forward ErgoSpace are trademarks of Tennant Company.

Specifications and parts are subject to change without notice.

Copyright © 2008, 2009, 2010, 2011, 2012, 2013, 2014 TENNANT Company, Printed in U.S.A.

BG

КАК ДА ПОРЪЧВАМЕ ЧАСТИ - Вижте схемата по-горе

Използвайте само части, доставени от TENNANT или техни еквиваленти. Частите и доставките могат да се поръчат онлайн, по телефон, факс или по пощата.

Следвайте долупосочените стъпки, за да си осигурите бърза и точна доставка.

1. **(A)** Посочете модела на машината.
2. **(B)** Посочете серийния номер на машината от табелката с техническите данни.
3. **(C)** Уверете се, че сте използвали точния сериен номер от списъка с части.
4. Посочва номера на частта и количеството. Не поръчвайте части според страницата или референтните номера.
5. Посочете своето име, наименованието на фирмата, клиентския номер, адреса за получаване на сметката и доставката, тел.номер и номера на поръчката.
6. Посочете подробни инструкции за доставката.

(D) ▽ - посочва начин на монтаж
▲ - посочва частите, включени в монтажа

Моля, попълнете по време на монтажа за бъдеща справка.

Модел Э - _____
Сериен Э - _____
Опции на машината - _____
Търговски представител - _____
Тел. Э на търг. представител - _____
Клиентски Э - _____
Дата на монтаж - _____

CN

如何订购部件 – 参见下表

仅使用 TENNANT 公司提供的或同等部件。部件和供应可以在线订购，通过电话、传真或邮件订购。
请遵循下面的步骤确保及时交付。

1. (A) 确定机器型号。
2. (B) 从数据标签确定机器序列号。
3. (C) 确保使用部件列表中的正确序列号。
4. 确定部件号和数量。
   不要按页面或参考编号订购。
5. 提供您的姓名、公司名称、客户 ID 号、付帐和送货地址、电话号码和采购单编号。
6. 提供详细的送货说明。

(D) ▽ – 确定组件
▲ – 确定组件中包含的组件

请在安装时填写供未来参考。

型号 – _____
序列号 – _____
机器选项 – _____
销售代表– _____
销售代表电话号码 – _____
客户 ID 编号 – _____
安装日期 – _____

CZ

OBJEDNÁVÁNÍ DÍLŮ - Viz schéma výše.

Pou ívejte pouze díly dodané společností TENNANT Company nebo jim odpovídající. Díly a materiál lze objednat online, telefonem, faxem nebo poštou.

Aby bylo zajištěno rychlé dodání, postupujte podle kroků uvedených ní e.

1. **(A)** Zjistěte model stroje.
2. **(B)** Zjistěte sériové číslo stroje z výrobního štítku.
3. **(C)** Pou ijte správné sériové číslo ze seznamu dílů.
4. Určete číslo a mno ství dílů.
   Neobjednávejte podle stran nebo referenčních čísel.
5. Uveďte jméno, název společnosti, číslo ID zákazníka, fakturační a dodací adresu, telefonní číslo a číslo objednávky.
6. Uveďte podrobné pokyny pro dodání.

(D) ▽ - označuje sestavu
▲ - označuje díly v sestavě

Vyplňte během sestavování pro budoucí potřebu.

Číslo modelu - _____
Sériové číslo - _____
Doplňky zařízení - _____
Obchodní zástupce - _____
Tel. č. obchodního zástupce - _____
Číslo ID zákazníka - _____
Datum instalace - _____

DE

BESTELLEN VON ERSATZTEILEN - Siehe oben stehendes Diagramm.

Verwenden Sie nur von TENNANT gelieferte oder gleichwertige Ersatzteile. Ersatz- und Verschleißteile können online, telefonisch, per Fax oder per E-Mail bestellt werden.

Befolgen Sie für eine umgehende Lieferung die folgenden Schritte.

1. **(A)** Geben Sie das Modell der Maschine an.
2. **(B)** Geben Sie die Seriennummer der Maschine an (auf dem Datenaufkleber).
3. **(C)** Achten Sie darauf, dass die richtigen Seriennummer aus der Ersatzteilliste verwendet wird.
4. Geben Sie die Ersatzteilnummer und die Menge an.
   Bestellen Sie nicht nach Seitenzahl oder Referenznummern.
5. Geben Sie Ihren Namen, den Firmennamen, die Kundennummer, die Rechnungs- und Lieferadresse, die Telefonnummer und die Einkaufsauftragsnummer an.
6. Erteilen Sie genaue Versandanweisungen.

(D) ▽ - steht für eine Einheit
▲ - steht für Einzelteile einer Einheit

Bitte bei der Inbetriebnahme als Referenzangabe ausfüllen.

Modellnr. - _____
Seriennr. - _____
Maschinenoptionen - _____
Verkäufer - _____
Telefonnummer des Verkäufers - _____
Kundennummer - _____
Installationsdatum - _____

DK

BESTILLING AF RESERVEDELE - Se ovenstående tabel.

Brug kun reservedele, der er fremstillet af TENNANT, eller dele af tilsvarende kvalitet. Reservedele og tilbehør kan bestilles online, pr. telefon, pr. fax eller pr. brev.

Følg nedenstående trin for at sikre hurtig levering.

1. **(A)** Identificér maskinmodellen.
2. **(B)** Identificér maskinens serienummer på datamærkaten.
3. **(C)** Kontrollér, at det rigtige serienummer bruges i reservedelslisten.
4. Identificér reservedelsnummeret og antallet. Bestil ikke efter side- eller referencenumre.
5. Angiv dit navn, firmanavn, kunde- id- nummer, faktureringsadresse og leveringsadresse, telefonnummer og indkøbsordrenummer.
6. Angiv detaljerede instruktioner til forsendelse.

(D) ▽ - identificerer en enhed
▲ - identificerer reservedele i en enhed

Udfyld venligst på installationstidspunktet til fremtidig brug.

Modelnr. - _____
Serienr. - _____
Maskinekstraudstyr - _____
Salgskonsulent. - _____
Salgskonsulentens tlf. - _____
Kunde- id- nr. - _____
Installationsdato - _____

EE

KUIDAS VARUOSI TELLIDA – vaadake alltoodud joonist

Kasutage ainult TENNANT Company poolt tarnitud või samaväärseid varuosi. Varuosi ja tarvikuid saab tellida Interneti, telefoni, faksi või posti teel.

Kiire kohaletoimetamise tagamiseks järgige alltoodud juhiseid.

1. **(A)** Märkige masina mudel.
2. **(B)** Märkige andmesildil olev masina seerianumber.
3. **(C)** Veenduge, et olete valinud varuosade loendist õige seerianumbri.
4. Märkige varuosa number ja kogus. Ärge tellige lehekülje- või viitenumbri alusel.
5. Märkige oma nimi, ettevõtte nimi, kliendinumber, arveldus- ja saatmisaadress, telefoninumber ja ostutellimuse number.
6. Lisage täpsed saatmisjuhised.

(D) ▽ - tähistab komplekti
▲ - tähistab komplektis olevaid osii

Palun täitke paigaldamise ajal edaspidiseks viitamiseks.

Mudeli number - _____
Seerianumber - _____
Masina lisavarustus - _____
Müügiesindus - _____
Müügiesinduse telefoninumber - _____
Kliendinumber - _____
Paigaldamise kuupäev - _____

ES

CÓMO SOLICITAR PIEZAS - Consulte el diagrama anterior.

Utilice sólo las piezas suministradas por TENNANT Company o piezas equivalentes. Puede solicitar las piezas a través de internet, por teléfono, por fax o por correo.

Siga los siguientes pasos para que la entrega sea rápida.

1. **(A)** Indique el modelo de máquina.
2. **(B)** Indique el número de serie de la etiqueta de datos.
3. **(C)** Asegúrese de que indica el número de serie correcto de la lista de piezas.
4. Indique la cantidad y el número de la pieza. No realice el pedidoindicando el número de página o el de referencia.
5. Incluya su nombre, el nombre de la empresa, el ID de cliente, las direcciones de envío y facturación, el número de teléfono y el número del pedido de compra.
6. Facilite instrucciones de envío.

(D) ▽ - identifica un conjunto
▲ - identifica piezas de un conjunto

Rellene estos datos cuando realice la instalación para utilizarlos como referencia en el futuro.

Nº modelo - _____
Nº serie - _____
Opciones de la máquina - _____
Vendedor - _____
Nº teléfono vendedor - _____
Nº cliente - _____
Fecha de instalación - _____

FI

KUINKA VARAOSIA TILATAAN - katso kuvaa yllä.

Käytä ainoastaan TENNANTIN toimittamia tai niitä vastaavia varaosia. Voit tilata varaosia ja tarvikkeita internetistä, puhelimitse, faksilla tai sähköpostilla.

Noudata seuraavia ohjeita täsmällisen toimituksen varmistamiseksi.

1. **(A)** Katso koneen malli.
2. **(B)** IKatso koneen sarjanumero sen tunnustarrasta.
3. **(C)** Varmista, että osaluettelosta, että käytät oikeaa sarjanumeroa.
4. Katso osanumero ja kappalemäärä. Älä tilaa ilmoittamalla sivu- tai viitenumeroita.
5. Ilmoita nimesi, yrityksesi nimi, asiakasnumero, laskutus- ja toimitusosoite, puhelinnumero ja ostotilauksen numero.
6. Ilmoita yksityiskohtaiset toimitusosoitteet.

(D) ▽ - tarkoittaa kokoonpanoa
▲ - tarkoittaa kokoonpanoon sisältyviä osia

Ole hyvä ja täytä ottaessasi koneen käyttöön myöhempiä tarpeita varten.

Mallinumero - _____
Sarjanumero - _____
Koneen lisävarusteet - _____
Myyntiedustaja - _____
Myyntiedustajan puhelinnumero - _____
Asiakasnumero - _____
Asennuspäivä - _____

FR

COMMENT COMMANDER DES PIÈCES DÉTACHÉES - Voir le schéma ci- dessus.

Utilisez uniquement des pièces fournies par la société TENNANT ou équivalentes. Les pièces et fournitures peuvent être commandées en ligne, par téléphone, fax, ou par courrier.

Suivez les étapes ci- dessous pour assurer une livraison rapide.

1. **(A)** Identifiez le modèle de la machine.
2. **(B)** Identifiez le numéro de série de la machine, à partir de l'étiquette signalétique.
3. **(C)** Assurez- vous que le numéro de série correct est utilisé à partir de la liste de pièces détachées.
4. Identifiez le numéro de pièce et la quantité. Ne commandez pas par page ou numéros de référence.
5. Fournissez votre nom, le nom de votre société, votre numéro d'identification de client, l'adresse de facturation et d'expédition, le numéro de téléphone et le numéro du bon de commande.
6. Fournissez des instructions d'expédition détaillées.

(D) ▽ - identifie un assemblage
▲ - identifie les pièces composant l'assemblage

A remplir au moment de l'installation à titre de référence.

Nº du modèle - _____
Nº de série - _____
Options de la machine - _____
Agent commercial - _____
Nº tél. de l'agent commercial - _____
Numéro d'identification client - _____
Date d'installation - _____

GR

ΤΡΟΠΟΣ ΠΑΡΑΓΓΕΛΙΑΣ ΑΝΤΑΛΛΑΚΤΙΚΩΝ - Βλ. παραπάνω διάγραμμα.

Χρησιμοποιήστε μόνο ανταλλακτικά παρεχόμενα από την TENNANT Company ή ισοδύναμα. Τα ανταλλακτικά και αναλώσιμα μπορούν να παραγγελθούν online, τηλεφωνικά, με φαξ ή ταχυδρομικά.

Ακολουθήστε τα παρακάτω βήματα για να εξασφαλίσετε την έγκαιρη αποστολή τους.

1. **(A)** Βρείτε το μοντέλο μηχανήματος.
2. **(B)** Βρείτε τον αριθμό σειράς του μηχανήματος από την ετικέτα στοιχείων.
3. **(C)** Βεβαιωθείτε ότι χρησιμοποιείται ο σωστός αριθμός σειράς από τον κατάλογο ανταλλακτικών.
4. Βρείτε κωδικό ανταλλακτικού και ποσότητα. Μην παραγγέλνετε βάσει σελίδας ή αριθμών αναφοράς.
5. Δώστε το όνομα σας, όνομα εταιρείας, ID (κωδικό) πελάτη, διεύθυνση τιμολόγησης και αποστολής, αριθμό τηλεφώνου και αριθμό εντολής προμήθειας.
6. Δώστε λεπτομερείς πληροφορίες αποστολής.

(D) ▽ - υποδηλώνει υποσύστημα
▲ - υποδηλώνει τα μέρη που περιλαμβάνονται στο υποσύστημα

Παρακαλούμε συμπληρώστε κατά την ώρα της εγκατάστασης για μελλοντική αναφορά.

Αρ. Μοντέλου - _____
Αρ. σειράς - _____
Επιλογές Μηχανήματος - _____
Εκπ. πωλήσεων - _____
Τηλ. εκπροσώπου πωλήσεων - _____
Αριθμός πελάτη - _____
Ημερομηνία εγκατάστασης - _____

HU

HOGYAN RENDELJÜNK ALKATRÉSZEKET - Lásd: fenti diagramm.

Kizárólag TENNANT vagy azzal egyenértékű cserealkatrészeket használjon. Az alkatrészeket és anyagokat meg lehet rendelni az Interneten keresztül, vagy telefonon, faxon és e-mailben.

A pontos szállítás érdekében kövesse az alábbi lépéseket.

1. **(A)** Adja meg a gép típusát.
2. **(B)** Az adatcímke alapján adja meg a gép gyártási számát.
3. **(C)** Ügyeljen arra, hogy a megfelelő gyártási számot válassza ki az alkatrészlistáról.
4. Adja meg a rendelési számot és a mennyiséget. A rendeléshez ne az oldalszámot vagy a hivatkozási számot használja.
5. Adja meg a nevét, a cége nevét, az ügyfélazonosító számát, a számlázási és szállítási címét, a telefonszámát és a rendelési számot.
6. Adjon részletes szállítási utasításokat.

(D) ▽ - a jel csomagra utal
▲ - a jel a csomagban található alkatrészekre utal

A későbbi visszakeresések érdekében kérjük, hogy a rovatokat az első üzembehelyezéskor töltse ki.

Típusszám - _____
Gyártási szám. - _____
A gép felszereltsége - _____
Kereskedelmi képviselő - _____
Kereskedelmi képviselő telefonszáma - _____
Ügyfél azonosító száma - _____
Üzembehelyezés dátuma - _____

HR

NARUIVANJE DIJELOVA - Pogledajte dijagram iznad

Koristite isključivo dijelove tvrtke TENNANT ili jednakovrijedne dijelova. Dijelove i potrošni materijal možete naručiti preko interneta, telefonom, faksom ili poštom.

Slijedite sljedeće korake kako biste osigurali brzu isporuku.

1. **(A)** Ustanovite model stroja.
2. **(B)** Ustanovite serijski broj stroja s pločice s podacima.
3. **(C)** Provjerite da koristite odgovarajući serijski broj sa spiska dijelova.
4. Odredite broj dijela i količinu. Ne naručujte na osnovu brojeva stranice ili referentnih brojeva.
5. Navedite vaše ime, ime tvrtke, korisnički identifikacijski broj, adresu za naplatu i dostavu, broj telefona i broj kupovine.
6. Navedite detaljne upute za dostavu.

(D) ▽ - Odredite sklop
▲ - Odredite dijelove uključene u sklop

Molimo ispunite prilikom montaže za buduće potrebe.

Broj modela - _____
Serijski broj - _____
Mogućnosti stroja - _____
Prodajni predstavnik - _____
Br. telefona prod. predst. - _____
Korisnčiki identifikacijski broj - _____
Datum montaže - _____

IT

COME ORDINARE LE PARTI - Vedere schema precedente.

Utilizzare solo ricambi forniti da TENNANT o equivalenti. Ricambi e forniture possono essere ordinati online, per telefono, via fax o per posta elettronica.

Per ottenere una consegna rapida, seguire i passaggi indicati di seguito.

1. **(A)** Identificare il modello della macchina.
2. **(B)** Identificare il numero di serie della macchina dall'etichetta dei dati.
3. **(C)** Utilizzare il numero di serie corretto presente nell'elenco delle parti di ricambio.
4. Identificare numero di parte e quantità. Non ordinare per numero di pagina o di riferimento.
5. Fornire nome del contatto, nome della società, numero di ID cliente, indirizzo di fatturazione e di spedizione, numero di telefono e numero di ordine di acquisto.
6. Fornire istruzioni dettagliate per la spedizione.

(D) ▽ - identifica un gruppo
▲ - identifica parti comprese in un gruppo

Compilare il modulo al momento dell'installazione per poterlo consultare in futuro in caso di necessità.

N. Modello - _____
N. Serie - _____
Opzioni della macchina - _____
Venditore - _____
Tel. venditore - _____
Numero ID cliente - _____
Data di installazione - _____

JP

パーツの発注方法 ?上記の図を参照してください

TENNANT社製のパーツまたは同等品のみをお使いください。
パーツやサプライ品のご注文は、オンライン、電話、FAX、または手紙でお願いいたします。
確実にお届けできるように、以下の情報お知らせください。

1. **(A)** 製品のモデル名をお知らせください。
2. **(B)** 製品のデータラベルに印刷されているシリアル番号をお知らせください。
3. **(C)** パーツリストを参照して、シリアル番号が正しいかご確認ください。
4. パーツ番号と数量をお知らせください。マニュアル/カタログのページ番号や参照番号でのご注文はご遠慮ください。
5. お客様のお名前、会社名、顧客ID番号、請求/発送先住所、電話番号、注文書番号をお知らせください。
6. 発送に関するご希望があれば、明記してください。

(D) ▽ – アセンブリを示します
▲ – アセンブリに含まれるパーツを示します

後日確認できるように、設置時に記入してください。

モデルNo. – _____
シリアルNo. – _____
製品のオプション– _____
販売代理店 – _____
販売代理店の電話番号 – _____
顧客ID番号 – _____
設置日 – _____

LT

KAIP UŽSISAKYTI DALIS - žr. diagramà viršuje

Naudokite tik "Tennant" kompanijos tiekiamas arba lygiavertes joms dalis. Dalis galite užsisakyti internetu, telefonu, faksu bei elektroniniu paštu.

Kad užsakymas būtų greitai įvykdytas, laikykitės išvardytų taisyklių.

1. **(A)** Nurodykite mašinos modelį.
2. **(B)** Norodykite mašinos serijos numerį, kurį rasite ant duomenų žymės.
3. **(C)** Įsitikinkite, kad nurodomas tikslus serijos numeris iš dalių sàrašo.
4. Nurodykite dalies numerį ir reikiamà kiekį. Neužsakinėkite pagal puslapius ar nuorodos numerius.
5. Nurodykite savo vardà, kompanijos pavadinimà, kliento ID numerį, sàskaitos išrašymo ir vežimo adresà, telefono numerį ir pirkimo užsakymo numerį.
6. Nurodykite išsamias gabenimo instrukcijas.

(D) ∇ - žymi sistemà
▲ - nurodo sistemos dalis

Prašome užpildyti montavimo metu, siekiant gauti informacijà ateityje.

Modelio nr. - _____
Serijos nr. - _____
Mašinos parinktys - _____
Prekybos atstovas - _____
Komivojažieriaus tel. nr. - _____
Pirkėjo ID numeris - _____
Sumontavimo data - _____

LV

KĀ PASŪTĪT REZERVES DETAĻAS - Skat. diagrammu iepriekš

izmantojiet tikai TENNANT Company piegādātās vai tām līdzvērtīgas rezerves detaļas. Daļas un piegādi var pasūtīt internetā, pa tālruni, pa faksu vai pastu.

Lai nodrošinātu savlaicīgu piegādi, sekojiet zemāk aprakstītajiem soļiem.

1. **(A)** Nosakiet mašīnas modeli.
2. **(B)** Nosakiet mašīnas sērijas numuru uz tehnisko datu uzlīmes.
3. **(C)** Pārliecinieties, ka tiek uzrakstīts attiecīgais sērijas numurs no detaļu saraksta.
4. Nosakiet detaļas numuru un skaitu. Veicot pasūtījumus neatsaucieties uz lappušu vai norādes numuriem.
5. Uzrakstiet savu vārdu, uzņēmuma nosaukumi, klienta identitātes numuru, adresi rēķina piesūtīšanai un piegādei un pirkuma pasūtījuma numuru.
6. Sniedziet detalizētu informāciju par piegādi.

(D) ∇ - nosaka ierīci i
▲ - nosaka detaļas, kas ir komplektā ar ierīci

Veicot uzstādīšanu, lūdzam pierakstīst attiecīgo informāciju izmantošanai turpmāk.

Modeļa Nr. - _____
Sērijas Nr. - _____
Iekārtas papildaprīkojums- _____
Pārdošanas pārst. - _____
Pārdošanas pārst. tālr. Nr. - _____
Klienta identitātes numuru- _____
Uzstādīšanas datums- _____

NL

HOE ONDERDELEN TE BESTELLEN - Zie schema hierboven.

Gebruik alleen onderdelen die door TENNANT Company zijn geleverd of soortgelijke onderdelen. Onderdelen en voorraden kunnen online, per telefoon, fax of schriftelijk besteld worden.

Volg de stappen hieronder om een juiste levering te garanderen.

1. **(A)** Bepaal het machinemodel.
2. **(B)** Lees het serienummer van de machine af van het gegevenslabel.
3. **(C)** Zorg dat het juiste serienummer wordt gebruikt uit de onderdelenlijst.
4. Bepaal het artikelnummer en het aantal. Bestel niet aan de hand van pagina's of referentienummers
5. Geef uw naam, bedrijfsnaam, klantnummer, factuur- en leveringsadres, telefoonnummer en bestelnummer op.
6. Geef gedetailleerde leveringsinstructies op.

(D) ▽ - geeft een eenheid aan
▲ - geeft de onderdelen van de eenheid aan

Vul tijdens installatie de onderstaande gegevens in voor eventueel toekomstig gebruik.

Modelnr. - _____
Serienr. - _____
Machine- opties - _____
Verkoopvert. - _____
Telnr. verkoopvert. - _____
Klantnummer - _____
Installatiedatum - _____

NO

HVORDAN BESTILLE DELER - Se diagram over.

Bruk kun deler levert av TENNANT Company eller ekvivalente deler. Deler og forsyninger kan bestilles online, per telefon, per faks eller per post.

Følg trinnene under for å sikre rask levering.

1. **(A)** Angi maskinmodellen.
2. **(B)** Angi maskinens serienummer fra typeskiltet.
3. **(C)** Forsikre deg om at korrekt serienummer brukes fra delelisten.
4. Angi delenummer og antall. Bestill ikke ut fra side- eller referansenumre.
5. Angi ditt navn, firmanavn, kunde- ID- nummer, fakturerings- og forsendelsesadresse, telefonnummer og innkjøpsordrenummer.
6. Angi detaljerte forsendelsesinstruksjoner.

(D) ▽ - angir en delegruppe
▲ - angir deler inkludert i en delegruppe

Fyll ut ved installasjonstidspunkt for fremtidig bruk.

Modellnr. - _____
Serienr.. - _____
Maskinens tillegg - _____
Salgsrep. - _____
Salgsrep. telefonnr. - _____
Kunde- ID- nummer - _____
Installasjonsdato - _____

PL

JAK ZAMAWIAĆ CZĘŚCI - patrz schemat powyżej.

Należy używać wyłącznie części dostarczanych przez firmę TENNANT Company lub równoważnych. Części i dostawy mogą być zamawiane online, przez telefon, faksem lub pocztą.

Aby zapewnić szybką dostawę, należy przestrzegać następujących wskazówek.

1. **(A)** Określić model maszyny.
2. **(B)** Określić numer seryjny maszyny znajdujący się na tabliczce znamionowej.
3. **(C)** Odszukać ten numer seryjny w wykazie części.
4. Określić numer części i ilość. Nie zamawiać na podstawie numeru strony lub liczby porządkowej wykazu.
5. Podać swoje nazwisko, nazwę firmy, numer identyfikacyjny klienta, adres dostawy i dostarczenia rachunku, numer telefonu i numer zamówienia zakupu.
6. Podać dokładne instrukcje dotyczące dostawy.

(D) ▽ - oznacza zespół
▲ - oznacza część w zespole

Prosimy wpisać datę instalacji do późniejszego wykorzystania.

Nr modelu- _____
Nr seryjny - _____
Opcje maszyny - _____
Przedst. sprzedaży - _____
Nr tel. przedst. sprzed. - _____
Nr ident. klienta - _____
Data instalacji - _____

PTG

COMO ENCOMENDAR PEÇAS - Consulte o diagrama acima.

Utilize apenas peças fornecidas pela TENNANT Company ou equivalentes. As peças e consumíveis podem ser encomendados online, por telefone, fax ou correio.

Siga os passos abaixo para garantir uma entrega rápida.

1. **(A)** Identifique o modelo da máquina.
2. **(B)** Identifique o número de série da máquina que se encontra na etiqueta de dados.
3. **(C)** Certifique- se de que usa o número de série correcto da lista de peças.
4. Identifique o número de produto e a quantidade. Não encomende através de números de página ou de referência.
5. Forneça o seu nome, o nome da empresa, o número de ID do cliente, os endereços de facturação e entrega, o número de telefone e o número da nota de encomenda.
6. Forneça instruções de entrega detalhadas.

(D) ▽ - identifica uma unidade
▲ - identifica peças incluídas numa unidade

Preencha na altura da instalação para futura referência.

Modelo nº - _____
Nº de série - _____
Opções da máquina - _____
Vendedor - _____
Telefone do vendedor - _____
Número de ID do cliente - _____
Data de instalação - _____

RU

КАК ЗАКАЗАТЬ ЗАПЧАСТИ - См. схему ниже.

Используйте только запчасти, поставляемые компанией TENNANT или их аналоги. Запасные части и расходные материалы можно заказать в режиме онлайн, телефоном, факсом или электронной почтой.

Для своевременной доставки следуйте описанным ниже инструкциям.

1. **(A)** Укажите модель машины.
2. **(B)** Укажите серийный номер машины, обозначенный на табличке технических данных.
3. **(C)** Удостоверьтесь, что надлежащий серийный номер перечислен в списке запчастей.
4. Укажите номер детали и нужное количество. Не используйте номера страниц или ссылок.
5. Укажите свое имя, название компании, идентификационный номер покупателя, расчетный адрес и адрес доставки, телефонный номер и номер заказа на покупку.
6. Укажите подробные сведения о доставке.

(D) ▽ - означает узел
▲ - обозначает деталь узла

Во время установки заполните, пожалуйста, эти сведения для того, чтобы ссылаться в дальнейшем.

Модель Э - _____
Серийный Э - _____
Опции машины - _____
Торговый представитель - _____
Телефон торгового представителя - _____
Идент. номер покупателя - _____
Дата установки - _____

SE

BESTÄLLNING AV RESERVDELAR - Se ovanstående schema.

Använd endast delar från Tennant Company eller likvärdiga. Delar och material kan beställas online, telefoniskt, per fax eller post.

Följ nedanstående steg för en snabb leverans.

1. **(A)** Identifiera maskinens modell.
2. **(B)** Identifiera maskinens serienummer på typskylten.
3. **(C)** Kontrollera att rätt serienummer används från dellistan.
4. Identifiera artikelnumret och mängden. Beställ inte med hjälp av sido- eller referensnummer.
5. Uppge ditt namn, företagets namn, kundens ID- nummer, faktura- och leveransadress, telefonnummer och ordernumret vid inköp.
6. Ge detaljerade transportanvisningar.

(D) ▽ - identifierar en modul
▲ - identifierar delar som ingår i en modul

Fyll i vid installation och spar för framtida bruk.

Modellnr. - _____
Serienr. - _____
Tilvalsutrustning - _____
Försäljare - _____
Försäljarens tel.nr. - _____
Kundnummer - _____
Installationsdatum - _____

SK

POSTUP PRI OBJEDNÁVANÍ ČASTÍ - Pozri vyššie uvedený diagram.

Vyu ívajte výhradne dielce dodané spoločnos ou TENNANT, alebo ich ekvivalenty. Dielce a polo ky je mo né objedna online, telefonicky, faxom, alebo poštou.

Na zabezpečenie promptného doručenia sa riaďte nasledovnými krokmi.

1. **(A)** Identifikujte model stroja.
2. **(B)** Z etikety s údajmi identifikujte sériové číslo stroja.
3. **(C)** Ubezpečte sa, e ste zadali správne sériové číslo zo zoznamu dielcov.
4. Identifikujte číslo dielu a mno stvo. Neobjednávajte pomocou čísel strán, alebo referenčných čísel.
5. Zadajte Vaše meno, meno spoločnosti, ID číslo zákazníka, fakturačnú a prepravnú adresu, telefónne číslo a objednávacie číslo dielu.
6. Uveďte podrobné prepravné pokyny.

(D) ▽ - identifikuje sadu
▲ - identifikuje časti sady

Vyplňte prosím pri inštalácii pre prípad potreby v budúcnosti.

č. modelu - _____
Sériové č. - _____
Zvláštne príslušenstvo stroja - _____
Obchodné zastúpenie - _____
Obch. zastúpenie tel. č. - _____
ID č. zákazníka - _____
Dátum inštalácie - _____

SL

NAROČANJE NADOMESTNIH DELOV - glejte zgornjo sliko.

Uporabljajte samo originalne nadomestne dele Tennant ali enakovredne dele. Dele in potrošni material lahko naročite prek spleta, po telefonu, faksu ali pošti.

Za zagotovitev čimbolj hitre dostave sledite spodnjim navodilom.

1. **(A)** Ugotovite model stroja.
2. **(B)** Na ploščici s podatki poiščite serijsko številko stroja.
3. **(C)** Poskrbite, da na seznamu nadomestnih delov poiščete pravilno serijsko številko.
4. Poiščite številko dela in potrebno količino. Pri naročilih ne navajajte strani ali referenčne številke.
5. Navedite svoje ime, ime podjetja, ID številko stranke, naslova za dostavo in izdajo računa, telefonsko številkoin številko naročila.
6. Navedite podrobna navodila za dostavo.

(D) ▽ - označuje sklop
▲ - označuje dele sklopa

Prosimo, da ob vgradnji izpolnite te podatke, da vam bodo v prihodnje na voljo.

Št. modela - _____
Serijska številka - _____
Dodatna oprema stroja - _____
Prodajni predstavnik - _____
Telefonska št. prodajnega predstavnika - _____
Številka stranke - _____
Datum vgradnje - _____

TR

PARÇALARIN S PAR ED LMES - Yukar daki emaya bak n.

Yaln zca TENNANT Company'den sa lanan veya e de erde parçalar kullan n. Parça veya sarf malzemeleri çevrimiçi olarak, telefonla, faksla veya postayla sipari edilebilir.

Zaman nda teslimat sa lamak için a a daki ad mlar izleyin.

1. **(A)** Makine modelini belirtin.
2. **(B)** Veri etiketinden makine seri numaras n belirtin.
3. **(C)** Parça listesinden uygun seri numaras n n kullan ld ndan emin olun.
4. Parça numaras n ve miktar n belirtin. Sayfa veya referans numaralar n kullanarak sipari vermeyin.
5. Ad n z , irketinizin ad n , mü teri kimlik numaran z , faturalama ve sevk yat adreslerini, telefon numaras n ve sat n alma sipari i numaras n belirtin.
6. Ayr nt l sevk yat talimatlar n belirtin.

(D) ▽ - bir tertibat belirtir
▲ - tertibattaki parçalar belirtir

leri tarihlerde ba vurmak için lütfen kurulum s ras nda doldurun.

Model No. - _____

Seri No. - _____

Makine Seçenekleri - _____

Sat Temsilcisi - _____

Sat Temsilcisi telefon no. - _____

Mü teri Kimlik Numaras - _____

Kurulum Tarihi - _____

General Recommended Maintenance Items (1 of 2)

	Ref.	Part No.	Serial Number	Description	Qty.
▽		9004541	(000000-005699)	Maint Kit, 400hr, Gas [S30]	1
▲		372575	(000000-005699)	Sparkplug [Gm]	4
▲		369746	(000000-005699)	Element, Fltr, Air [Dn]	1
▲		372440	(000000-005699)	Filter, Fuel [Gm 1.6l/3.0l]	1
▲		398279	(000000-005699)	Element, Fltr, Air, Safety	1
▽		9004542	(000000-002003)	Maint Kit, 400hr, Lpg [S30]	1
▲		372575	(000000-002003)	Sparkplug [Gm]	4
▲		369746	(000000-002003)	Element, Fltr, Air [Dn]	1
▲		372615	(000000-002003)	Filter Kit, Fuelock, Lpg	1
▲		398279	(000000-002003)	Element, Fltr, Air, Safety	1
▽		9004543	(000000-)	Maint Kit, 800hr, Gas [S30]	1
▲		31613	(000000-)	Strainer, Hyd, 025gpm 100mesh 03psi	1
▲		25122	(000000-)	Cap, Breather, Hyd, 2.4 Ds	1
▲		1021579	(000000-)	Filter Assy, Hyd, 10mic	1
▲		372440	(000000-)	Filter, Fuel [Gm 1.6l/3.0l]	1
▲		398279	(000000-)	Element, Fltr, Air, Safety	1
▲		369746	(000000-)	Element, Fltr, Air [Dn]	1
▽		9004544	(000000-002003)	Maint Kit, 800hr, Lpg [S30]	1
▲		31613	(000000-002003)	Strainer, Hyd, 025gpm 100mesh 03psi	1
▲		25122	(000000-002003)	Cap, Breather, Hyd, 2.4 Ds	1
▲		1021579	(000000-002003)	Filter Assy, Hyd, 10mic	1
▲		372615	(000000-002003)	Filter Kit, Fuelock, Lpg	1
▲		398279	(000000-002003)	Element, Fltr, Air, Safety	1
▲		369746	(000000-002003)	Element, Fltr, Air [Dn]	1
▽		9007384	(002004-005699)	Maint Kit, 400hr [S30 Lpg 2010]	1
▲		372575	(002004-005699)	Sparkplug [Gm]	4
▲		369746	(002004-005699)	Element, Fltr, Air [Dn]	1
▲		9007380	(002004-005699)	Filter Kit, Fuelock,Lpg[Gm1.6l 2010]	1
▲		398279	(002004-005699)	Element, Fltr, Air, Safety	1
▽		9007385	(002004-)	Maint Kit, 800hr [S30 Lpg 2010]	1
▲		31613	(002004-)	Strainer, Hyd, 025gpm 100mesh 03psi	1
▲		25122	(002004-)	Cap, Breather, Hyd, 2.4 Ds	1
▲		1021579	(002004-)	Filter Assy, Hyd, 10mic	1
▲		9007380	(002004-)	Filter Kit, Fuelock,Lpg	1
▲		398279	(002004-)	Element, Fltr, Air, Safety	1
▲		369746	(002004-)	Element, Fltr, Air [Dn]	1
		371972	(000000-005699)	Element, Fltr, Oil, Eng, Spin-On (GM)	1
		9010627	(005700-)	Filter, Oil, (Mits)	1
		1042101	(000000-)	Filter, Cyl, 11.09d, 13.31l, 6.6 Id	1
		9004545	(000000-)	Key, Ignition	1
		372571	(000000-)	Belt, Ribbed, 39.0l	1
		1042954	(000000-)	Belt, Ribbed, 55.1l	1
		9004940	(000000-001312)	Skirt Kit, Side / Rear [S30]	1
		1045366	(001313-)	Skirt, Door, Brush	1
		1045354	(001313-)	Skirt, Door, Brush	1
		54190	(000000-)	Skirt, Neo, .37, 06.00w 44.65l, 04/ Sl Recirculation	1
		383160	(000000-001312)	Skirt, Neo, .18, 06.74w 49.00l, 04/ Sl Rear Skirt	1
		1045348	(001313-)	Skirt, Neo, .18, 06.74w 50.00l, 04/ Sl	1
		1032012	(000000-)	Skirt, Deflector Wheel Pocket Skirt	2
		1061961	(000000-)	Tire Assy, Solid, 20.8 X 5.0, W/ Brg	2
		53817	(000000-)	Tire Assy, Solid, 18.0x4.3 4.5bc/5bolt Solid Rear Tire	1
		1032515	(000000-)	Tire Assy, Pneu, 600x9 4.5bc/5bolt, Ce Pneumatic Front	1
		1005229	(000000-)	Tire Assy, Pneu, 5.00 4.5bc/5blt[R8ic70] Pneumatic Rear	1
		9010622	(005700-)	Plug, Spark	4

General Recommended Maintenance Items (2 of 2)

Ref.	Part No.	Serial Number	Description	Qty.
▽	9004077	(000000–)	Skirt Kit, Hppr Maint [S30]	1
▲	1035684	(000000–)	Bolt, Carriage, M8 X 1.25 X 30	16
▲	32491	(000000–)	Washer, Flat, 0.31, Std	10
▲	08713	(000000–)	Nut, Hex, Lock, M8 X 1.25, Nl, Ss	16
▲	1034168	(000000–)	Bracket, Sppt, Hppr Seal	1
▲	1045357	(000000–)	Skirt, Lip	1
▲	1045359	(000000–)	Skirt, Lip, Hppr	1
▲	1026798	(000000–)	Strap, Main, Lip	1
▲	1038037	(000000–)	Skirt, Hppr	1
▲	1038353	(000000–)	Skirt, Neo, .12, 06.65w 18.50l, 03/ Sl	1
▲	41178	(000000–)	Washer, Flat, 0.25, Fendr	5
▲	11635	(000000–)	Screw, Hex, M6 X 1.00 X 12, Nl, Ss	5
▽	9004078	(000000–)	Skirt Kit, Door, Hppr, Maint [S30]	1
▲	1044420	(000000–)	Seal, Door, Dump	1
▲	1030218	(000000–)	Cord, Sponge	1
▲	1044419	(000000–)	Plate, Retainer, Door, Dump	1
▲	1037345	(000000–)	Screw, Hex, M6 X 1.00 X 30, 9.8, Sems	24
▲	32490	(000000–)	Washer, Flat, 0.25, Std	24
▲	08712	(000000–)	Nut, Hex, Lock, M6 X 1.00, Nl, Ss	24
▲	1048891	(000000–)	Plate, Seal, Retainer	2
▲	1044950	(000000–)	Strap, Door, Dump, Side	2
▲	1026879	(000000–)	Seal, Wiper, Door	1
	16411	(000000–)	Paint, Airdry, Off–White, 12oz (NOT EUROPE)	1
	16412	(000000–)	Paint, Airdry, Teal, 12oz, Solid (NOT EUROPE)	1
	377540	(000000–)	Paint, Airdry, Blk, 12oz (NOT EUROPE)	1
	377538	(000000–)	Paint, Airdry, Gray, 12oz (NOT EUROPE)	1
	377537	(000000–)	Paint, Airdry, Iron Gray, 12oz (NOT EUROPE)	1
	1057710	(000000–)	Oil, Hyd [El, Iso 100, 01gal]	1
	1057711	(000000–)	Oil, Hyd [El, Iso 100, 05gal]	1
	1069019	(000000–)	Oil, Hyd [El, Iso 68, 01gal]	1
	1069020	(000000–)	Oil, Hyd [El, Iso 68, 05gal]	1
	1057707	(000000–)	Oil, Hyd [El, Iso 32, 01gal]	1
	1057708	(000000–)	Oil, Hyd [El, Iso 32, 05gal]	1
	99321	(000000–)	Oil, Hydraulic 68 [20l] (CE ONLY)	1

SECTION 2

Contents **Page**

Fig. 1 – Brushes, Replacement 2-4
Fig. 2 – Main Frame Group 2-6
Fig. 3 – Brush Door Group, Right 2-8
Fig. 4 – Brush Door Group, Left 2-10
Fig. 5 – Operator Station Group (000000-002099) 2-12
Fig. 6 – Operator Station Group (002100-) 2-14
Fig. 7 – Seat and Shroud Group (000000-002099) 2-16
Fig. 8 – Seat and Shroud Group (002100-) 2-18
Fig. 9 – Engine Cover Group, Rear (000000-002099) 2-20
Fig. 10 – Engine Cover Group, Rear (002100-) 2-22
Fig. 11 – Engine Cover Group, Top (000000-002099) 2-24
Fig. 12 – Engine Cover Group, Top (002100-) 2-26
Fig. 13 – Engine Cover Group, Side (000000-002099) 2-28
Fig. 14 – Engine Cover Group, Side (002100-) 2-30
Fig. 15 – Instrument Panel Group, S30 2-32
Fig. 16 – Instrument Panel Group, S30 XP . 2-34
Fig. 17 – Steering Group (000000-002099) 2-36
Fig. 18 – Steering Group (002100-) . 2-38
Fig. 19 – Engine and Mount Group, Gas/LPG (000000-005699) 2-40
Fig. 20 – Engine and Mount Group, Gas (005700-) 2-42
Fig. 21 – Engine and Mount Group, Lpg (005700-) 2-44
Fig. 22 – Engine EFI Group, Gas (000000-005699) 2-46
Fig. 23 – Engine EFI Group, Gas (005700-) 2-48
Fig. 24 – Engine EFI Group, LPG (000000-005699) 2-50
Fig. 25 – Engine EFI Group, LPG (005700-) 2-52
Fig. 26 – Engine Vaporizer Group, LPG (000000-002099) 2-54
Fig. 27 – Engine Vaporizer Group, LPG (002100-005699) 2-56
Fig. 28 – Engine Air Cleaner Group, Gas (000000-005699) 2-58
Fig. 29 – Engine Air Cleaner Group, Gas (005700-) 2-60
Fig. 30 – Engine Air Cleaner Group, LPG (000000-005699) 2-62
Fig. 31 – Engine Air Cleaner Group, LPG (005700-) 2-64

Contents **Page**

Fig. 32 – Engine Alternator and Battery Group (000000-005699) 2-66
Fig. 33 – Engine Alternator Group (005700-) 2-68
Fig. 34 – Engine Battery Group (005700-) 2-70
Fig. 35 – Engine Muffler Group (000000-005699) 2-72
Fig. 36 – Engine Muffler Group (005700-) 2-74
Fig. 37 – Engine Fuel Tank Group, Gas . . . 2-76
Fig. 38 – Engine Fuel Tank Group, LPG . . . 2-78
Fig. 39 – Engine Radiator Mount and Fan Group (000000-002099) 2-80
Fig. 40 – Engine Radiator Mount and Fan Group (002100-) 2-82
Fig. 41 – Engine Radiator Hoses Group, Gas/LPG (000000-005699) 2-84
Fig. 42 – Engine Radiator Hoses Group, Gas/LPG (005700-) 2-86
Fig. 43 – Wheel Group, Rear Drive S30 and XP 2-88
Fig. 44 – Wheel Assembly, Rear 2-90
Fig. 45 – Wheel and Brakes Group, Front Solid (Standard) 2-92
Fig. 46 – Wheel and Brakes Group, Front Pneumatic (Option) 2-94
Fig. 47 – Brake Pedal and Parking Brake Group 2-96
Fig. 48 – Directional Pedal Group 2-98
Fig. 49 – Hydraulic Pump Linkage Group, S30 and XP 2-100
Fig. 50 – Hopper Group, Plastic 2-102
Fig. 51 – Hopper Group, Steel 2-104
Fig. 52 – Hopper Cylinder and Dump Door Group, Plastic 2-106
Fig. 53 – Hopper Cylinder and Dump Door Group, Steel 2-108
Fig. 54 – Hopper Cover Group (000000-002099) 2-110
Fig. 55 – Hopper Cover Group (002100-) 2-112
Fig. 56 – Hopper Lift Arms and Bumper Group, Plastic 2-114
Fig. 57 – Hopper Lift Arms and Bumper Group, Steel 2-116
Fig. 58 – Hopper Counter Weight Group, Steel 2-118
Fig. 59 – Hopper Pre-Filter Group 2-120
Fig. 60 – Hopper Vacuum Fan Group 2-122
Fig. 61 – Hopper Filter Shaker Group 2-124
Fig. 62 – Side Brush Lift Group, S30 2-126
Fig. 63 – Side Brush Motor and Pivot Group, S30 2-128

Contents **Page**

Fig. 64 - Side Brush Motor Group, S30 XP 2-130
Fig. 65 - Side Brush Lift and Pivot Group, S30 XP 2-132
Fig. 66 - Main Brush Lift Group, S30 2-134
Fig. 67 - Main Brush Lift Group, S30 XP . 2-136
Fig. 68 - Main Brush Drive Group 2-138
Fig. 69 - Hydraulic Schematic 2-140
Fig. 70 - Hydraulic Hose Group, S30 (000000-002999) 2-142
Fig. 71 - Hydraulic Hose Group, S30 (003000-) 2-144
Fig. 72 - Hydraulic Hose Group, S30 XP (000000-002999) 2-146
Fig. 73 - Hydraulic Hose Group, S30 XP (003000-) 2-148
Fig. 74 - Hydraulic Reservoir Group 2-150
Fig. 75 - Hydraulic Cooler and Tubes Group (000000-002099) 2-152
Fig. 76 - Hydraulic Cooler and Tubes Group (002100-) 2-154
Fig. 77 - Hydraulic Pumps Group, S30 and XP 2-156
Fig. 78 - Hydraulic Valve Group, S30 2-158
Fig. 79 - Hydraulic Valve Group, S30 XP . 2-160
Fig. 80 - Electrical Schematic, GM, S30 (000000-005699) (1 of 4) 2-162
Fig. 81 - Electrical Schematic, Mitsubishi, S30 (005700-) (1 of 4) . . 2-166
Fig. 82 - Electrical Schematic, GM, S30 XP (000000-005699) (1 of 4) 2-170
Fig. 83 - Electrical Schematic, Mitsubishi, S30 XP (005700-) (1 of 4)2-174
Fig. 84 - Electrical Schematic, Gasoline Engine Harness, GM (000000-005699) (1 of 2) 2-178
Fig. 85 - Electrical Schematic, Gas Engine Harness, Mitsubishi (005700-) (1 of 2) 2-180
Fig. 86 - Electrical Schematic, LPG Engine Harness GM (000000-005699) (1 of 2) 2-182
Fig. 87 - Electrical Schematic, LPG Engine Harness, Mitsubishi (005700-) (1 of 2) 2-184
Fig. 88 - Electrical Wire Harnesses Group 2-186
Fig. 89 - Label Group 2-194

Fig. 1 - Brushes, Replacement

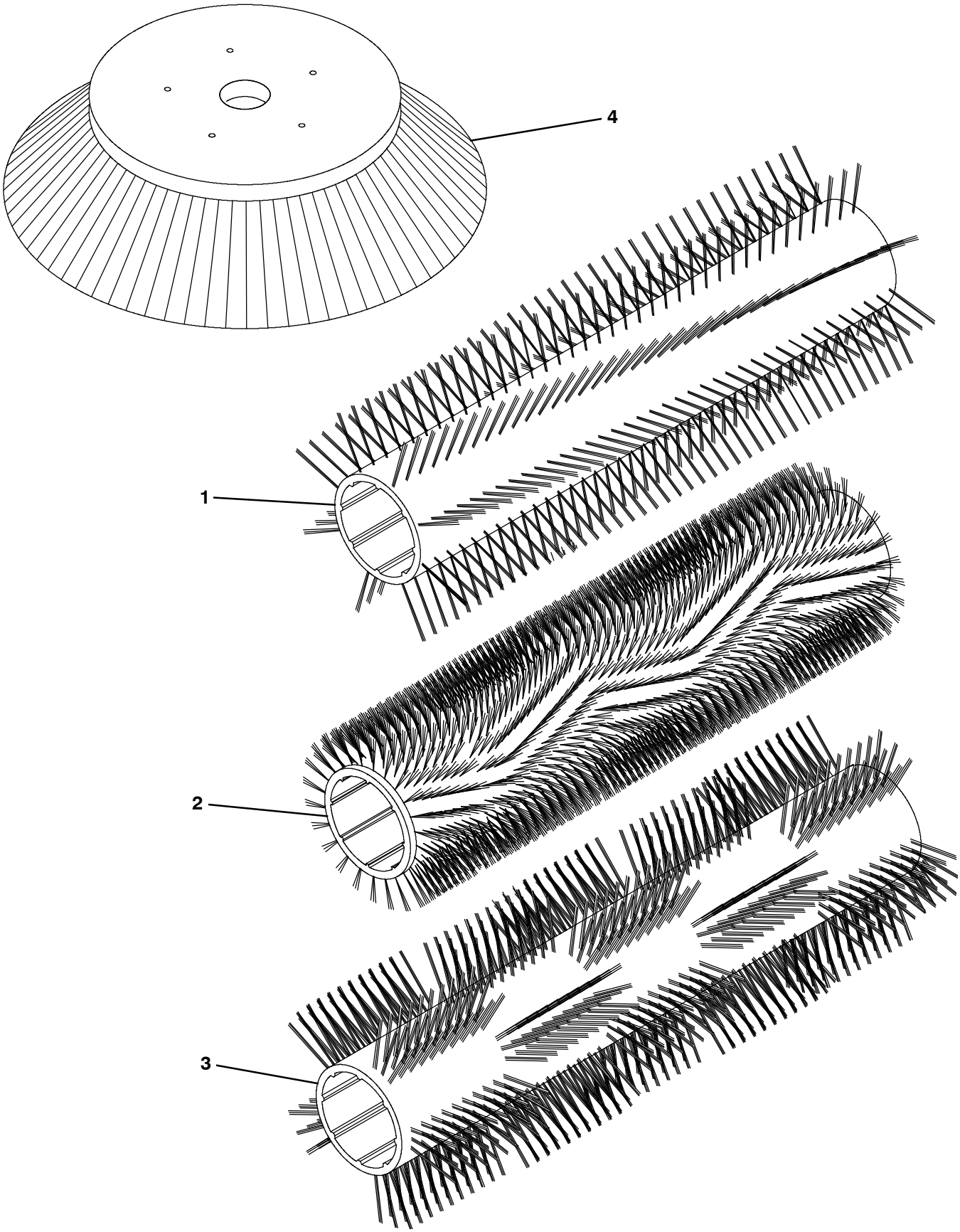

354763

Fig. 1 - Brushes, Replacement

Ref.	Part No.	Serial Number	Description	Qty.
1	54927	(000000-)	Brush, Swp, 45L, 24 Single Row, Natural Fiber & Wire	1
1	54922	(000000-)	Brush, Swp, 45L, 24 Single Row, Nylon	1
1	54923	(000000-)	Brush, Swp, 45L, 8 Double Row, Nylon	1
1	54925	(000000-)	Brush, Swp, 45L, 8 Double Row, Polypropylene & Wire	1
1	59440	(000000-)	Brush, Swp, 45L, 8 Double Row, Wire	1
1	66019	(000000-)	Brush, Swp, 45L, 8 Double Row, Polypropylene	1
1	66018	(000000-)	Brush, Swp, 45L, 5 Double Row Patrol, Nylon	1
2	370008	(000000-)	Brush, Swp, 45L, Sand Wedge, Polypropylene	1
3	370009	(000000-)	Brush, Swp, 45L, Window , Polypropylene	1
4	1027380	(000000-)	Brush, Disk, Swp, 26.0 D, Polypropylene	1
4	1041102	(000000-)	Brush, Disk, Swp, 26.0 D, Nylon	1
4	1042097	(000000-)	Brush, Disk, Swp, 25.4 D, Flat Wire	1

Fig. 2 - Main Frame Group

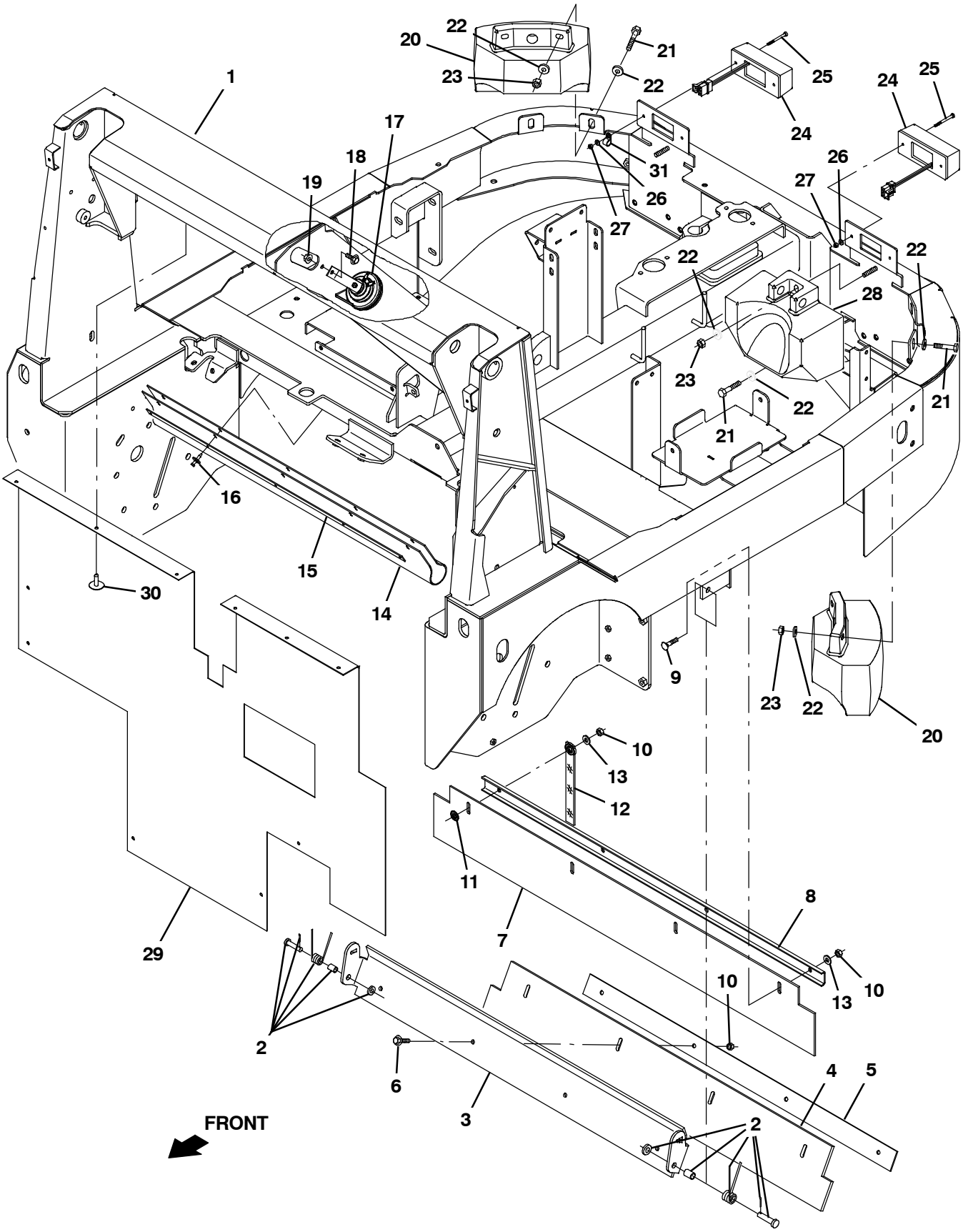

354675

Fig. 2 - Main Frame Group

	Ref.	Part No.	Serial Number	Description	Qty.
	1	1028252	(000000-)	Frame Wldt, Main [S30]	1
	2	69904	(000000-)	Spring Assy Kit	3
	3	54182	(000000-)	Bracket, Flap, Recirculation	1
	4	54190	(000000-)	Skirt, Neo, .37, 06.00w 44.65l, 04/ Sl	1
	5	54184	(000000-)	Retainer, Blade, Deflector	1
	6	1037355	(000000-)	Screw, Hex, M8 X 1.25 X 35, 9.8, Sems	4
	7	9004940	(000000-001312)	Skirt Kit, Side / Rear [S30]	1
	7	1045348	(001313-)	Skirt, Neo, .18, 06.74w 50.00l, 04/ Sl	1
	8	383161	(000000-)	Channel, .12, 1.5w 0.5 44.6l, 3/0.4h	1
	9	69915	(000000-)	Bolt, Carriage, M8 X 1.25 X 40	4
	10	08709	(000000-)	Nut, Hex, Lock, M8 X 1.25, Nl	8
	11	41142	(000000-)	Washer, Lock, Int-Ext, 0.38	1
	12	71579	(000000-)	Strap, Static, W/Grommet, .19 1.1w 25.0l	1
	13	32491	(000000-)	Washer, Flat, 0.31, Std	4
	14	1036913	(000000-)	Skirt, Rbr, .12, 10.66w 43.00l, 10/ Sl	1
	15	1040146	(000000-)	Strip, Backing, Hppr	1
	16	21246	(000000-)	Rivet, Plstc, .325d X 0.79	5
	17	369704	(000000-)	Horn, 12vdc, Dba [Wolo]	1
	18	1037346	(000000-)	Screw, Hex, M8 X 1.25 X 25, 9.8, Sems	1
	19	07791	(000000-)	Nut, Hex, Flng, M8 X 1.25	2
	20	1036819	(000000-)	Weight, Counter, Casting, 79.9 Lb	2
	21	16930	(000000-)	Screw, Hex, M10 X 1.50 X 50, 8.8	5
	22	32493	(000000-)	Washer, Flat, 0.50, Std	10
	23	41430	(000000-)	Nut, Hex, Lock, M10 X 1.5, Nl	5
▽	24	1033578	(000000-)	Taillight, 12vdc, 6.3 X 2.5	2
▲		45780	(000000-)	Lamp, 12vdc, 0.5a, 04cp [#1157]	1
	25	377165	(000000-)	Screw, Pan, Phl, M4 X 0.70 X 60, 4.8	4
	26	19065	(000000-)	Washer, Flat, 08	4
	27	02850	(000000-)	Nut, Hex, Lock, M4 X 0.70, Nl	4
	28	1031503	(000000-)	Weight, Counter, Casting, 72.8lb (S30 and S30XP Only)	1
	29	1045224	(000000-)	Skirt, Rbr	1
	30	72968	(000000-)	Rivet, Plstc, .250d X 0.90	12
	31	26395-2	(000000-)	Clamp, Cable, Stl, 0.38d X 0.38w, 1hole	1

Fig. 3 - Brush Door Group, Right

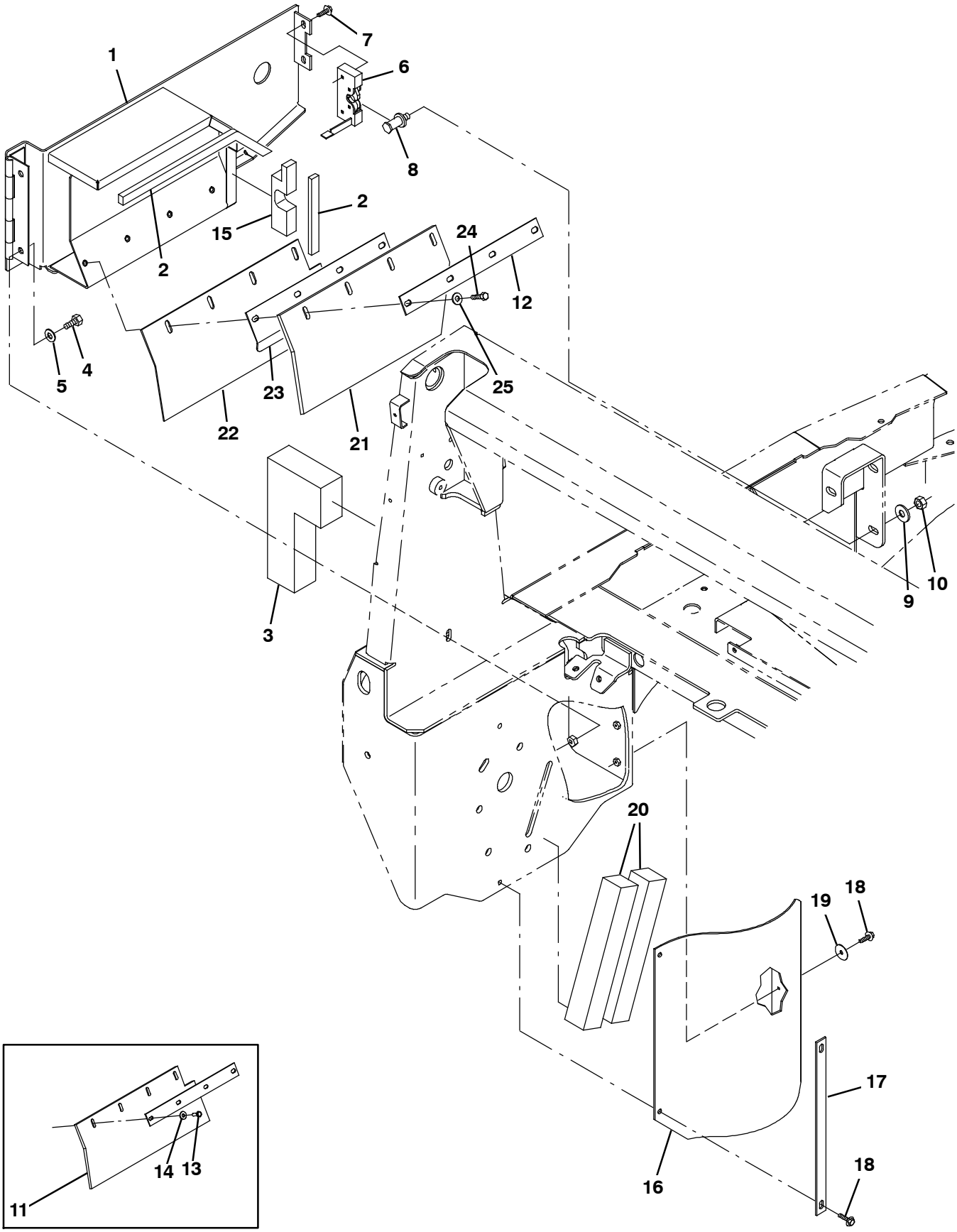

354677

Fig. 3 - Brush Door Group, Right

Ref.	Part No.	Serial Number	Description	Qty.
1	1029580	(000000-)	Door Wldt, Brush, Rh	1
2	1046428	(000000-)	Seal, Afmkt, Rbr, Clsd, Adh, 02ft	2
3	1042812	(000000-)	Seal, Rbr, Clsd, 2.00w 09.8l Rh	1
4	370181	(000000-)	Screw, Hex, M10 X 1.50 X 25, 10.9	2
5	32492	(000000-)	Washer, Flat, 0.38, Std	2
6	59195	(000000-)	Latch, Hook	1
7	1036892	(000000-)	Screw, Hex, M6 X 1.00 X 25, 9.8 Sems	2
8	59192	(000000-)	Latch, Bolt	1
9	41619	(000000-)	Washer, Flat, 0.56b 1.38d .11, Ss	1
10	07788	(000000-)	Nut, Hex, Std, M12 X 1.75, Ss	1
11	9004940	(000000-001312)	Skirt Kit, Side / Rear [S30]	1
12	1039320	(000000-)	Retainer, Skirt, .12, 1.5w X 14.4l, Blk	1
13	09010	(000000-001312)	Screw, Hex, M8 X 1.25 X 25, Ss	4
14	01685	(000000-001312)	Washer, Flat, 0.38b 0.88d .08, Ss	4
15	59537	(000000-)	Seal, Rbr, Clsd, 1.00, Door, Brush, Rh	1
16	1032012	(000000-)	Skirt, Deflector	2
17	1033343	(000000-)	Bracket, Retainer, Seal	2
18	1037345	(000000-)	Screw, Hex, M6 X 1.00 X 30, 9.8, Sems	8
19	41187	(000000-)	Washer, Flat, Belleville, .38	4
20	1042791	(000000-)	Insulation, Acstc, 2.0, 02.0 X 12.0	2
21	1045366	(001313-)	Skirt, Door, Brush	1
22	1045354	(001313-)	Skirt, Door, Brush	1
23	1045352	(001313-)	Bracket, Skirt	1
24	76570	(001313-)	Screw, Hex, M8 X 1.25 X 30, 8.8	4
25	32491	(001313-)	Washer, Flat, 0.31, Std	4

Fig. 4 - Brush Door Group, Left

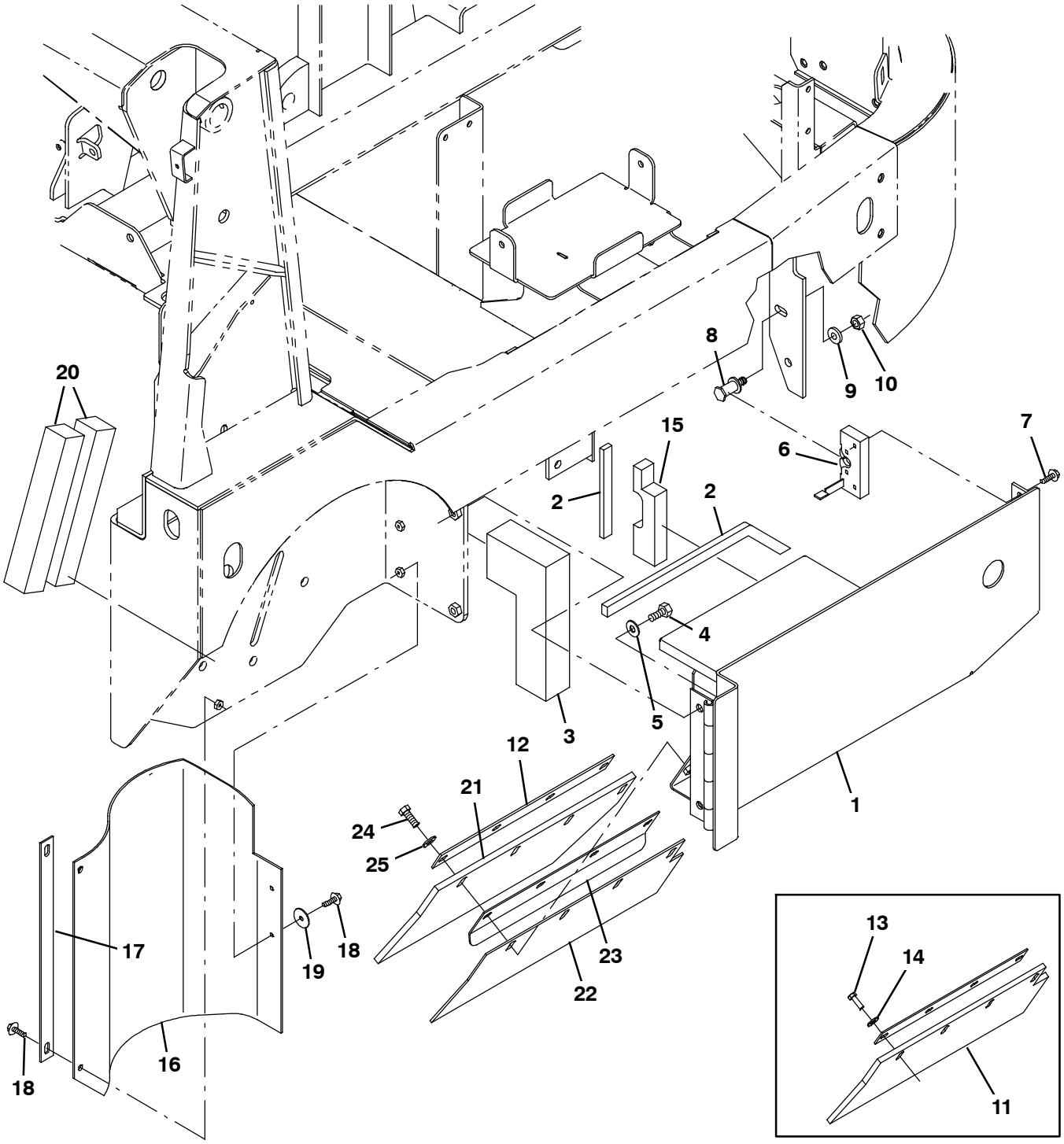

354678

Fig. 4 - Brush Door Group, Left

Ref.	Part No.	Serial Number	Description	Qty.
1	1029801	(000000-)	Door Wldt, Brush, Lh	1
2	1046428	(000000-)	Seal, Afmkt, Rbr, Clsd, Adh, 02ft	2
3	1042829	(000000-)	Seal, Rbr, Clsd, 2.00w 09.8l Lh	1
4	370181	(000000-)	Screw, Hex, M10 X 1.50 X 25, 10.9	2
5	32492	(000000-)	Washer, Flat, 0.38, Std	2
6	59194	(000000-)	Latch, Hook	1
7	1036892	(000000-)	Screw, Hex, M6 X 1.00 X 25, 9.8 Sems	2
8	59192	(000000-)	Latch, Bolt	1
9	41619	(000000-)	Washer, Flat, 0.56b 1.38d .11, Ss	1
10	07788	(000000-)	Nut, Hex, Std, M12 X 1.75, Ss	1
11	9004940	(000000-001312)	Skirt Kit, Side / Rear [S30]	1
12	1039320	(000000-)	Retainer, Skirt, .12, 1.5w X 14.4l, Blk	1
13	09010	(000000-001312)	Screw, Hex, M8 X 1.25 X 25, Ss	4
14	01685	(000000-001312)	Washer, Flat, 0.38b 0.88d .08, Ss	4
15	59538	(000000-)	Seal, Rbr, Clsd, 1.00, Door, Brush, Lh	1
16	1032012	(000000-)	Skirt, Deflector	2
17	1033343	(000000-)	Bracket, Retainer, Seal	2
18	1037345	(000000-)	Screw, Hex, M6 X 1.00 X 30, 9.8, Sems	8
19	41187	(000000-)	Washer, Flat, Belleville, .38	4
20	1042791	(000000-)	Insulation, Acstc, 2.0, 02.0 X 12.0	2
21	1045366	(001313-)	Skirt, Door, Brush	1
22	1045354	(001313-)	Skirt, Door, Brush	1
23	1045352	(001313-)	Bracket, Skirt	1
24	76570	(001313-)	Screw, Hex, M8 X 1.25 X 30, 8.8	4
25	32491	(001313-)	Washer, Flat, 0.31, Std	4

Fig. 5 - Operator Station Group (000000-002099)

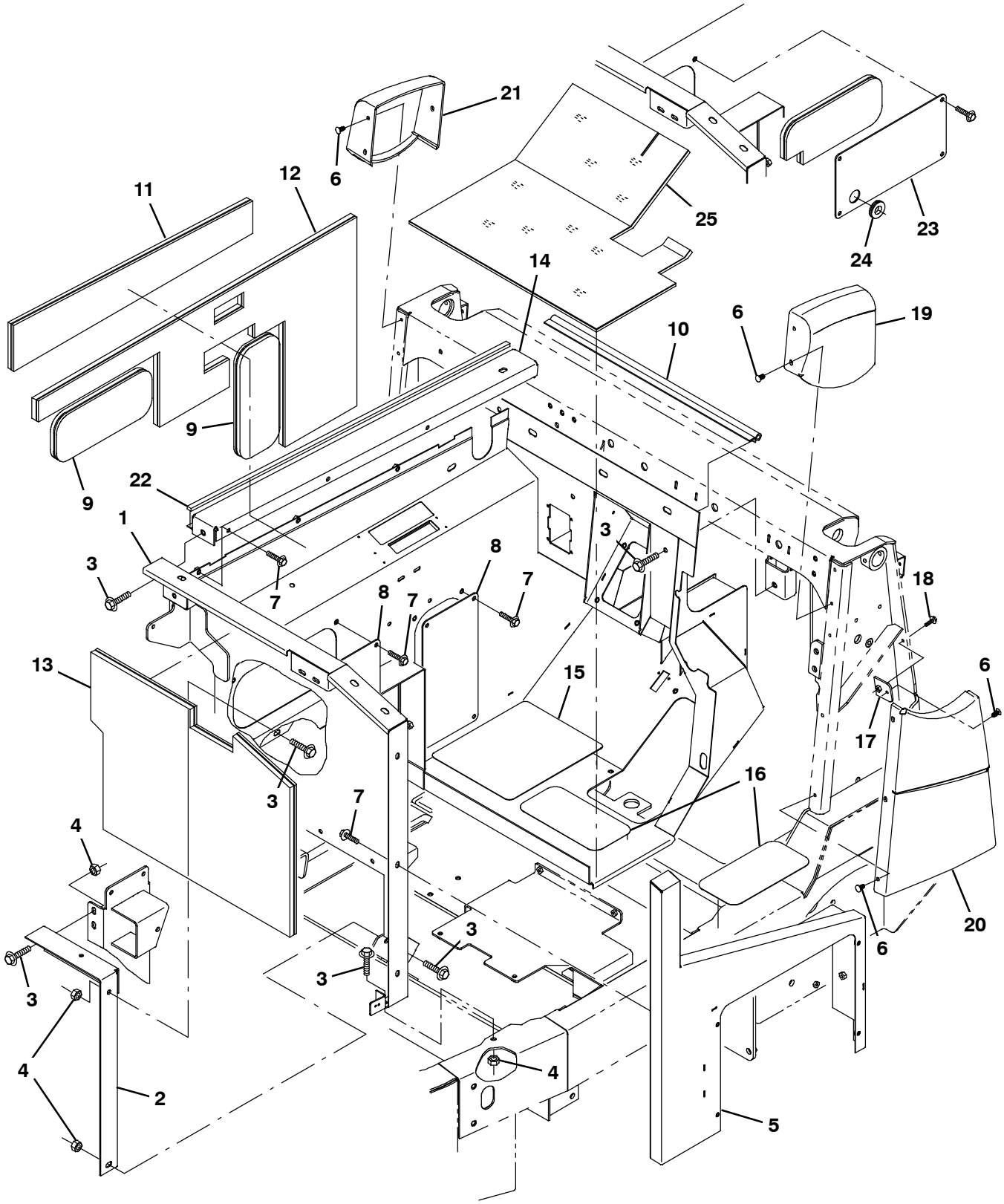

354679

Fig. 5 - Operator Station Group (000000-002099)

Ref.	Part No.	Serial Number	Description	Qty.
1	1033201	(000000-002099)	Shroud Wldt, Station, Oprtr	1
2	1032315	(000000-002099)	Channel	1
3	1037358	(000000-002099)	Screw, Hex, M10 X 1.50 X 35, 9.8, Sems	9
4	07792	(000000-002099)	Nut, Hex, Flng, M10 X 1.50	5
5	1036608	(000000-002099)	Panel Wldt, Side	1
6	21168	(000000-002099)	Clip, .250h, Plstc [Pine-Tree]	10
7	1037346	(000000-002099)	Screw, Hex, M8 X 1.25 X 25, 9.8, Sems	14
8	1028201	(000000-002099)	Panel, Side, Access	2
9	1038806	(000000-002099)	Insulation, Flame-Retardant, 0.75-0.88	2
10	1038959	(000000-002099)	Seal, Trim, Bulb, 90 Degree	1
11	1033288	(000000-002099)	Insulation, Flame-Retardant, 0.75-0.88	1
12	1033287	(000000-002099)	Insulation, Flame-Retardant, 0.75-0.88	1
13	1033286	(000000-002099)	Insulation, Flame-Retardant, 0.75-0.88	1
14	1030587	(000000-002099)	Lip, Station, Oprtr [li]	1
15	86799	(000000-002099)	Tread, Non-Skid, 10.0w 12.0l	1
16	223350	(000000-002099)	Tread, Non-Skid, 04.5w 10.0l	2
17	1034854	(000000-002099)	Plate, Attmnt, Cover	1
18	1036892	(000000-002099)	Screw, Hex, M6 X 1.00 X 25, 9.8 Sems	1
19	1039425	(000000-002099)	Cover, Lntl, Rh	1
20	1030553	(000000-002099)	Cover, Side, Rh	1
21	1030646	(000000-002099)	Cover, Lntl, Lh	1
22	1046426	(000000-002099)	Seal, Afmkt, Rbr, Clsd, Adh, 08ft	1
23	1044691	(000000-002099)	Panel, Side, Access, Ce (CE Only)	1
24	10632-8	(000000-002099)	Grommet, Rbr, 0.75id, F/1.3h, .12 Matl (CE Only)	1
25	1038738	(000000-002099)	Mat, Floor (S30XP Only)	1

Fig. 6 - Operator Station Group (002100-)

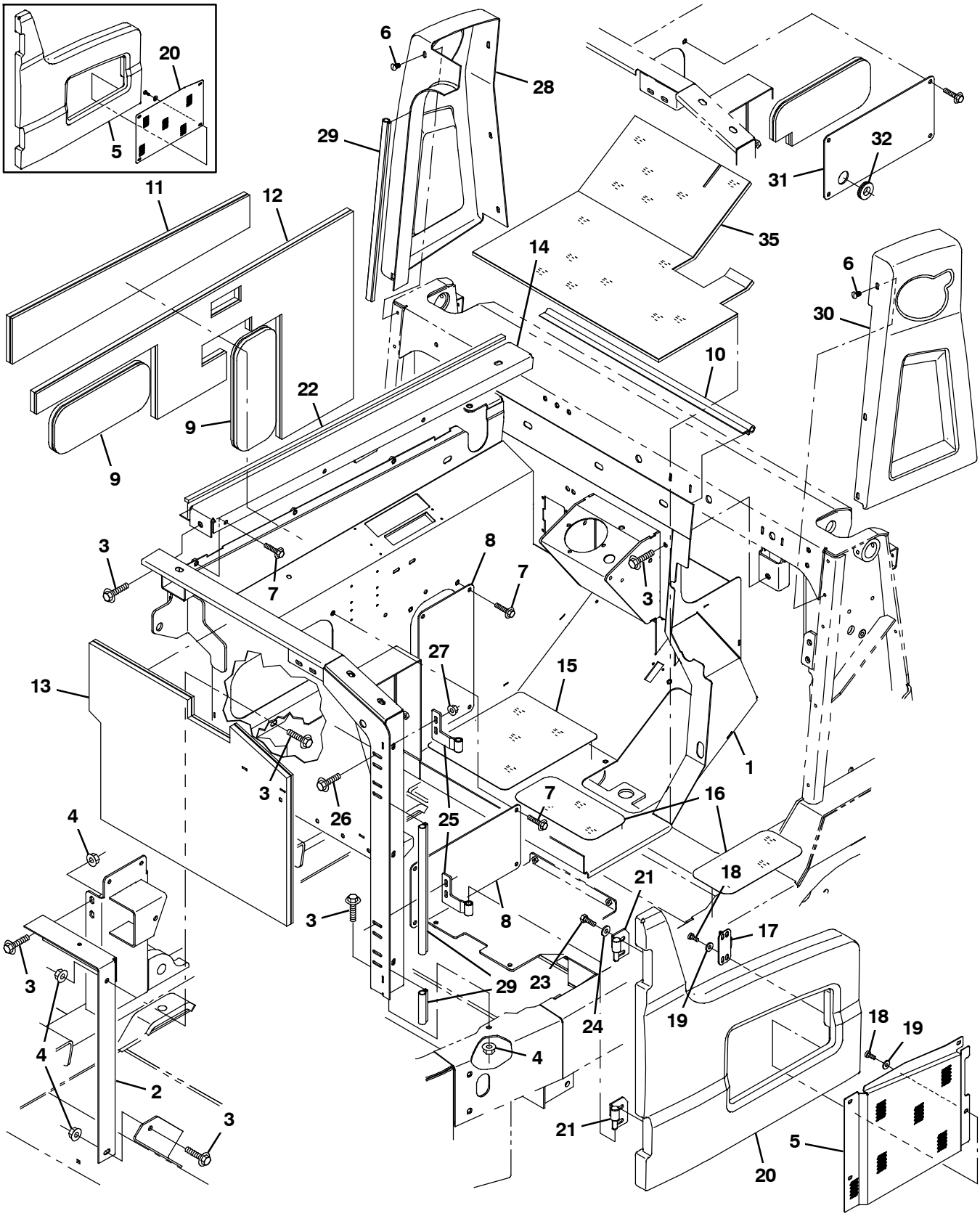

354679

Fig. 6 - Operator Station Group (002100-)

Ref.	Part No.	Serial Number	Description	Qty.
1	1058273	(002100-)	Shroud Wldt, Station, Oprtr	1
2	1032315	(002100-)	Channel	1
3	1037358	(002100-)	Screw, Hex, M10 X 1.50 X 35, 9.8, Sems	9
4	07792	(002100-)	Nut, Hex, Flng, M10 X 1.50	5
5	9007979	(002100-003725)	Cover, Seat, Rotomold, Afmkt [S30]	1
6	21168	(002100-)	Clip, .250h, Plstc [Pine-Tree]	12
7	1037346	(002100-)	Screw, Hex, M8 X 1.25 X 25, 9.8, Sems	14
8	1028201	(002100-)	Panel, Side, Access	2
9	1038806	(002100-)	Insulation, Flame-Retardant, 0.75-0.88	2
10	1038959	(002100-)	Seal, Trim, Bulb, 90 Degree	1
11	1033288	(002100-)	Insulation, Flame-Retardant, 0.75-0.88	1
12	1033287	(002100-)	Insulation, Flame-Retardant, 0.75-0.88	1
13	1033286	(002100-)	Insulation, Flame-Retardant, 0.75-0.88	1
14	1059307	(002100-)	Lip Wldt, Station, Oprtr	1
15	86799	(002100-)	Tread, Non-Skid, 10.0w 12.0l	1
16	223350	(002100-)	Tread, Non-Skid, 04.5w 10.0l	2
17	1026825	(002100-)	Bracket, Latch, Shrd, Seat	1
18	09200	(002100-)	Screw, Pan, Phl, M5 X 0.80 X 12, Ss	6
19	19066	(002100-)	Washer, Flat, 10	6
20	1058108	(002100-003725)	Panel, Shrd, Seat	1
21	1057880	(002100-)	Hinge Wldt, Shrd, Rh	2
22	1046426	(002100-)	Seal, Afmkt, Rbr, Clsd, Adh, 08ft	1
23	16735	(002100-)	Screw, Hex, M8 X 1.25 X 16, 8.8	4
24	32491	(002100-)	Washer, Flat, 0.31, Std	4
25	1057875	(002100-)	Hinge Wldt, Shrd, Rh	2
26	1036892	(002100-)	Screw, Hex, M6 X 1.00 X 25, 9.8, Sems	4
27	07790	(002100-)	Nut, Hex, Flng, M6 X 1.00	4
28	9007977	(002100-)	Cover, Lntl, Lh, Rotomold, Afmkt [S30]	1
29	1030588	(002100-)	Seal, Afmkt, Bulb, 90, 0.75d F/11ga 02ft	2
30	9007978	(002100-)	Cover, Lntl, Rh, Rotomold, Afmkt [S30]	1
31	1044691	(002100-)	Panel, Side, Access, Ce (CE Only)	1
33	1056828	(003726-)	Cover, Seat, Trimmed	1
34	1064528	(003726-)	Panel, Shrd, Seat	1
35	1038738	(002100-)	Mat, Floor (S30XP Only)	1

Fig. 7 - Seat and Shroud Group (000000-002099)

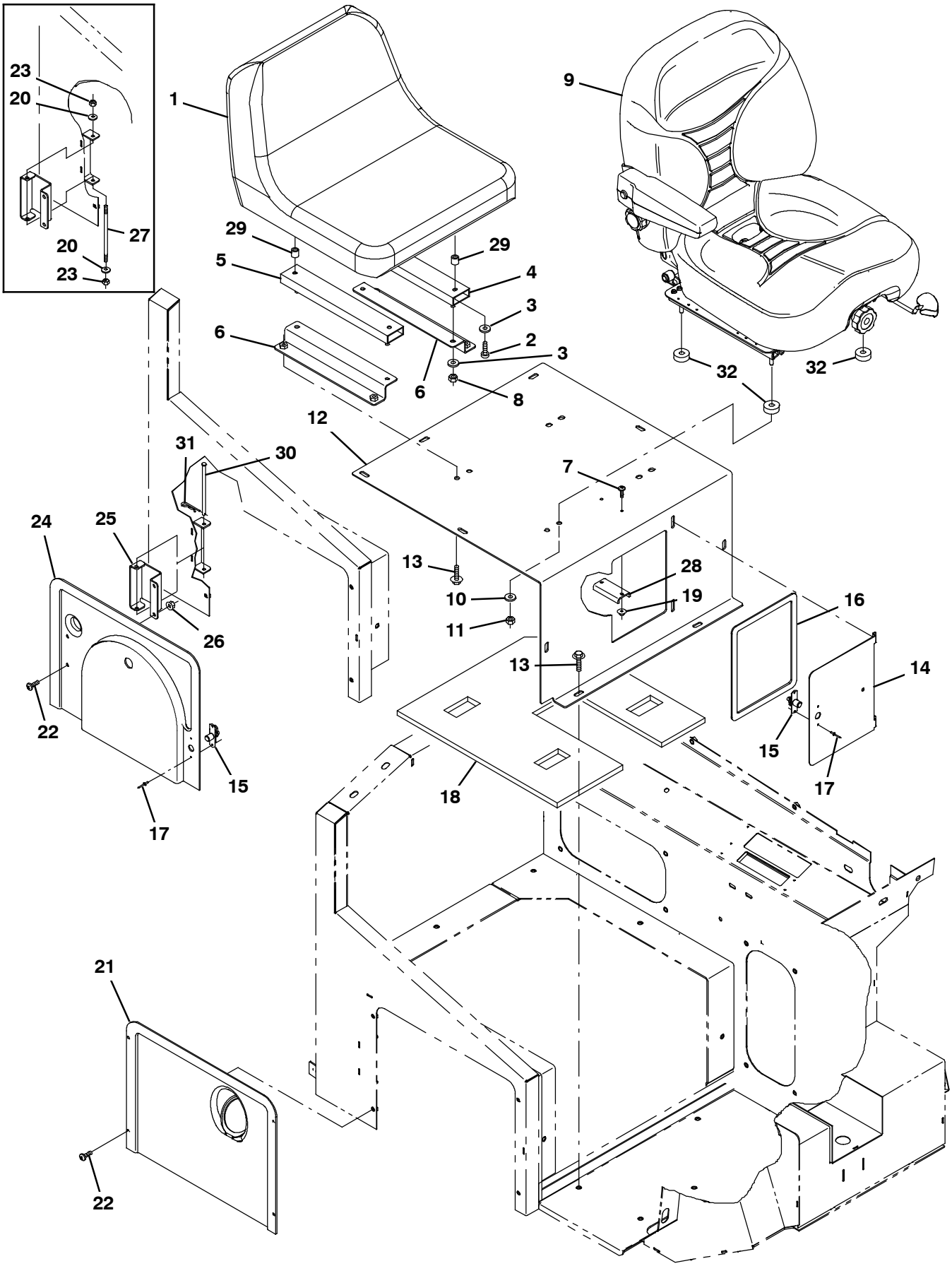

354680

Fig. 7 - Seat and Shroud Group (000000-002099)

	Ref.	Part No.	Serial Number	Description	Qty.
	1	9005082	(000000-001415)	Seat Kit, Std, Replmt (S30 Only)	1
	1	1048932	(001416-002099)	Seat, Std [Michigan, Model V-2505] (S30 Only)	1
	2	25537	(000000-001415)	Screw, Pan, Phl, .31-18 X 0.75, G2	4
	2	49177	(001416-002099)	Screw, Pan, Phl, .31-18 X 1.00, G2	4
	3	69461	(000000-002099)	Washer, Flat, 0.38b 0.88d .12, Stl, Pl	12
	4	360369	(000000-002099)	Track, Slide, Seat Adj, 12.5l	1
	5	360370	(000000-002099)	Track, Slide, Seat Adj, 12.5l, W/Latch	1
	6	1040363	(000000-002099)	Bracket, Angle, Mtg, Seat	2
	7	06933	(000000-002099)	Screw, Pan, Phl, M5 X 0.80 X 16, 4.8	2
	8	32983	(000000-002099)	Nut, Hex, Lock, .31-18, Nl	4
▽	9	1022105	(000000-002099)	Seat, Suspension, W/1 Arm & Seatbelt (S30XP Only)	1
▲		1066893	(000000-002099)	Seatbelt, Retractable [Deluxe Seat]	1
	10	32491	(000000-002099)	Washer, Flat, 0.31, Std (S30XP Only)	4
	11	32983	(000000-002099)	Nut, Hex, Lock, .31-18, Nl (S30XP Only)	4
	12	1036502	(000000-002099)	Panel, Seat	1
	13	1037346	(000000-002099)	Screw, Hex, M8 X 1.25 X 25, 9.8, Sems	13
	14	1036489	(000000-002099)	Door, Access	1
	15	140962	(000000-002099)	Latch, Cmpr, Spring, Knurled Knob, Pl	2
	16	1036500	(000000-002099)	Gasket, Rbr, .13, 07.87w 09.84l, Adh	1
	17	87316	(000000-002099)	Rivet, Blind, .125d X 0.32 X .25d, Alm	4
	18	1033291	(000000-002099)	Insulation, Flame-Retardant, 1.00	1
	19	07789	(000000-002099)	Nut, Hex, Flng, M5 X 0.80	2
	20	32483	(000000-001463)	Washer, Flat, 0.25, Sae	2
	21	9004524	(000000-002099)	Cover, Gas, W/ Label, Replmt	1
	22	1045525	(000000-002099)	Screw, Pan, Phl, M6 X 1.00 X 12, Blk	6
	23	13513	(000000-001463)	Nut, Hex, Lock, .25-28, Nl	2
	24	1040281	(000000-002099)	Cover, Lpg	1
	25	1042073	(000000-002099)	Hinge	1
	26	08708	(000000-002099)	Nut, Hex, Lock, M6 X 1.00, Nl	2
	27	81991	(000000-001463)	Rod, Thrd, 2 End, .25-28 06.0l	1
	28	63378	(000000-002099)	Magnet, Drive Brush	1
	29	1051052	(001416-002099)	Spacer, Rnd, .38b .88d .38l	4
	30	1048950	(001464-002099)	Pin, Clevis, 0.25d X 5.25l	1
	31	08085	(001464-002099)	Pin, Cotter, Hair, 0.31d .058 Wir	1
	32	1048261	(000000-002099)	Spacer, 0.32d, 1.00d, 0.38l, Pl (CE Only)	4

Fig. 8 - Seat and Shroud Group (002100-)

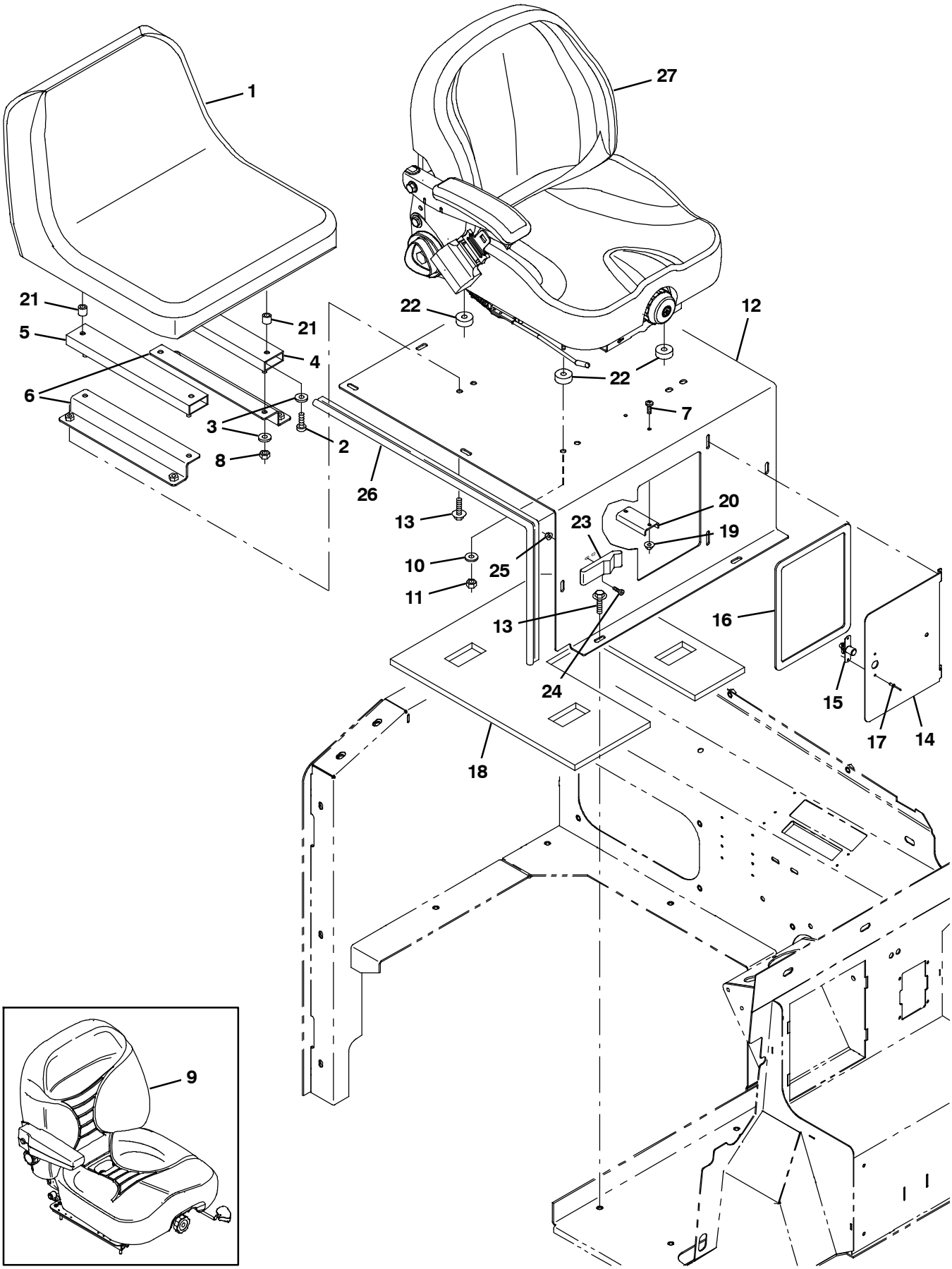

354680

Fig. 7 - Seat and Shroud Group (002100-)

	Ref.	Part No.	Serial Number	Description	Qty.
	1	1048932	(002100-005876)	Seat, Std [Michigan, Model V-2505] (S30 Only)	1
	1	1201894	(005877-)	Seat, Std [Milsco] (S30 Only)	1
	2	49177	(002100-)	Screw, Pan, Phl, .31-18 X 1.00, G2	4
	3	69461	(002100-)	Washer, Flat, 0.38b 0.88d .12, Stl, Pl	12
	4	360369	(002100-)	Track, Slide, Seat Adj, 12.5l	1
	5	360370	(002100-)	Track, Slide, Seat Adj, 12.5l, W/Latch	1
	6	1040363	(002100-)	Bracket, Angle, Mtg, Seat	2
	7	06933	(002100-)	Screw, Pan, Phl, M5 X 0.80 X 16, 4.8	2
	8	32983	(002100-)	Nut, Hex, Lock, .31-18, Nl	4
▽	9	1022105	(002100-006197)	Seat, Suspension, W/1 Arm & Seatbelt (S30XP Only)	1
▲		1066893	(002100-006197)	Seatbelt, Retractable [Deluxe Seat]	1
▲		1072815	(002100-006197)	Armrest, Rh	1
▲		1048955	(002100-006197)	Switch, Seat, No [Delta 6440-04]	1
	10	32491	(002100-)	Washer, Flat, 0.31, Std (S30XP Only)	4
	11	32983	(002100-)	Nut, Hex, Lock, .31-18, Nl (S30XP Only)	4
	12	1036502	(002100-)	Panel, Seat	1
	13	1037346	(002100-)	Screw, Hex, M8 X 1.25 X 25, 9.8, Sems	13
	14	1036489	(002100-)	Door, Access	1
	15	140962	(002100-)	Latch, Cmpr, Spring, Knurled Knob, Pl	1
	16	1036500	(002100-)	Gasket, Rbr, .13, 07.87w 09.84l, Adh	1
	17	87316	(002100-)	Rivet, Blind, .125d X 0.32 X .25d, Alm	2
	18	1033291	(002100-)	Insulation, Flame-Retardant, 1.00	1
	19	07789	(002100-)	Nut, Hex, Flng, M5 X 0.80	2
	20	63378	(002100-)	Magnet, Drive Brush	1
	21	1051052	(002100-)	Spacer, Rnd, .38b .88d .38l	4
	22	1048261	(002100-)	Spacer, 0.32d, 1.00d, 0.38l, Pl (CE Only)	4
	23	49800	(002100-)	Latch	1
	24	06928	(002100-)	Screw, Pan, Phl, M4 X 0.70 X 20, 4.8	2
	25	02850	(002100-)	Nut, Hex, Lock, M4 X 0.70, Nl	2
	26	1031625	(002100-)	Seal, Afmkt, Bulb, Str, .50d F/11ga 03ft	1
	27	1073641	(006198-)	Seat, Deluxe [S30] (S30XP Only) (See Breakdowns)	1

Fig. 9 - Engine Cover Group, Rear (000000-002099)

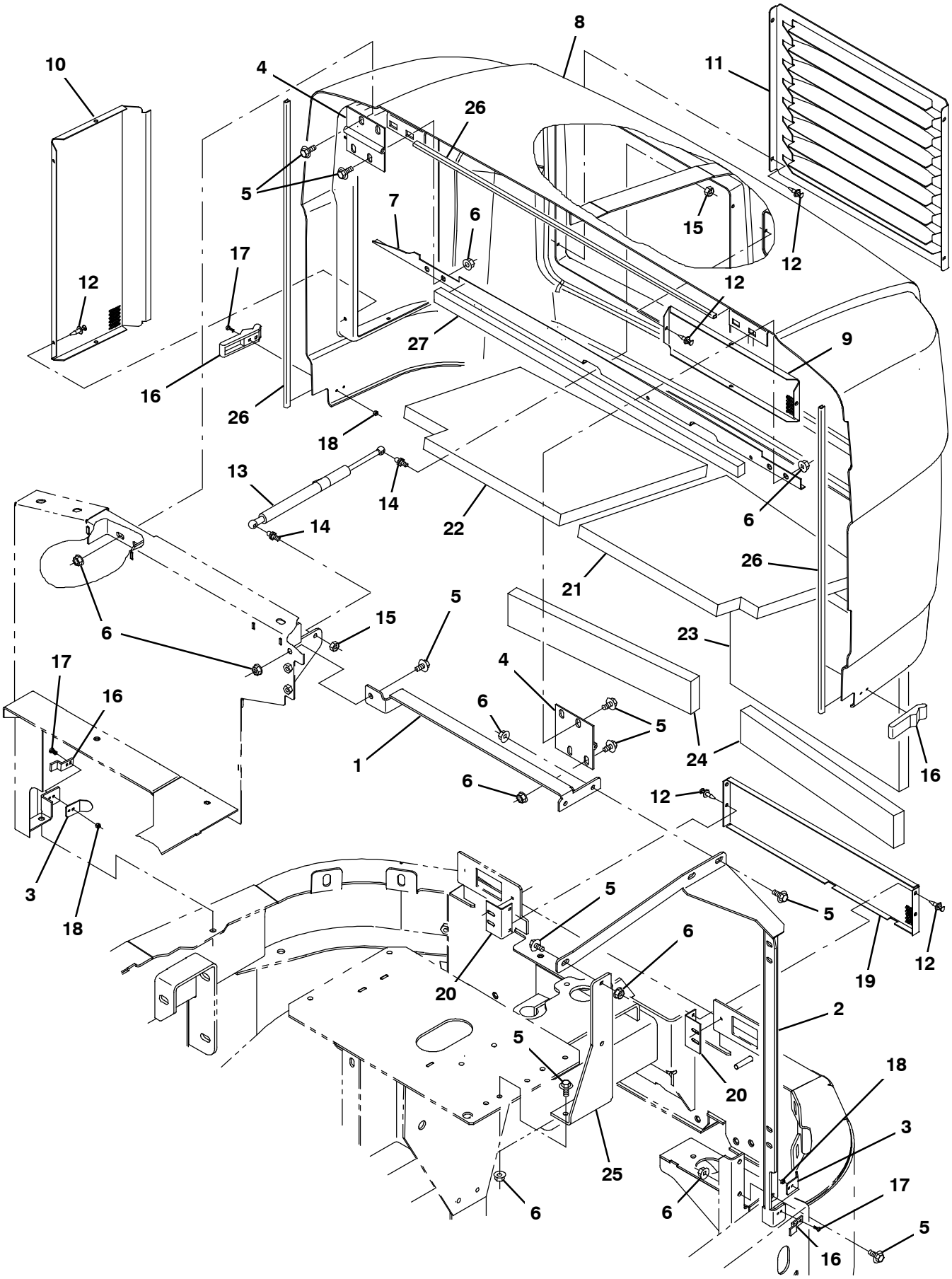

354681

Fig. 9 - Engine Cover Group, Rear (000000-002099)

Ref.	Part No.	Serial Number	Description	Qty.
1	1043760	(000000-002099)	Angle, Sppt Wldt, Hinge	1
2	1043762	(000000-002003)	Brace Wldt	1
2	1054842	(002004-002099)	Brace Wldt, Sppt [Gm 2010]	1
3	1034864	(000000-002099)	Angle, Guide	2
4	1032147	(000000-002099)	Hinge, .25pin .12 4.0w 04.0l, 4/.44sl	2
5	1037346	(000000-002099)	Screw, Hex, M8 X 1.25 X 25, 9.8, Sems	14
6	07791	(000000-002099)	Nut, Hex, Flng, M8 X 1.25	14
7	1034358	(000000-002099)	Strip, Seal	1
8	1033607	(000000-002099)	Cover Assy, Rear	1
9	1034254	(000000-002099)	Grill, Eng	1
10	1032894	(000000-002099)	Grill, Cooler, Oil	1
11	1043996	(000000-002099)	Grill, Rear	1
12	1040816	(000000-002099)	Rivet, Plstc, .250d X 0.90	16
13	1036513	(000000-002099)	Gasspring, 072lb, 06.2strk	1
14	58494	(000000-002099)	Stud, Ball, .39d .31-16, Gasspring	2
15	01760	(000000-002099)	Nut, Hex, Lock, .31-18, Nl, Thin	2
16	49800	(000000-002099)	Latch	2
17	06927	(000000-002099)	Screw, Pan, Phl, M4 X 0.70 X 16, 4.8	8
18	02850	(000000-002099)	Nut, Hex, Lock, M4 X 0.70, Nl	8
19	1032962	(000000-002099)	Grill	1
20	1034378	(000000-002099)	Bracket, Grill	2
21	1035807	(000000-002099)	Insulation, Flame-Retardant, 1.00	1
22	1035808	(000000-002099)	Insulation, Flame-Retardant, 1.00	1
23	1035809	(000000-002099)	Insulation, Flame-Retardant, 1.00	1
24	1035810	(000000-002099)	Insulation, Flame-Retardant, 1.00	2
25	1043751	(000000-002099)	Bracket, Mtg, Air-Clnr	1
26	1046406	(000000-002099)	Molding, Afmkt, Trim, Pvc, .18 .31, 08ft	3
27	1046413	(000000-002099)	Seal, Afmkt, Rbr, Open, Adh, 03ft	1

Fig. 10 - Engine Cover Group, Rear (002100-)

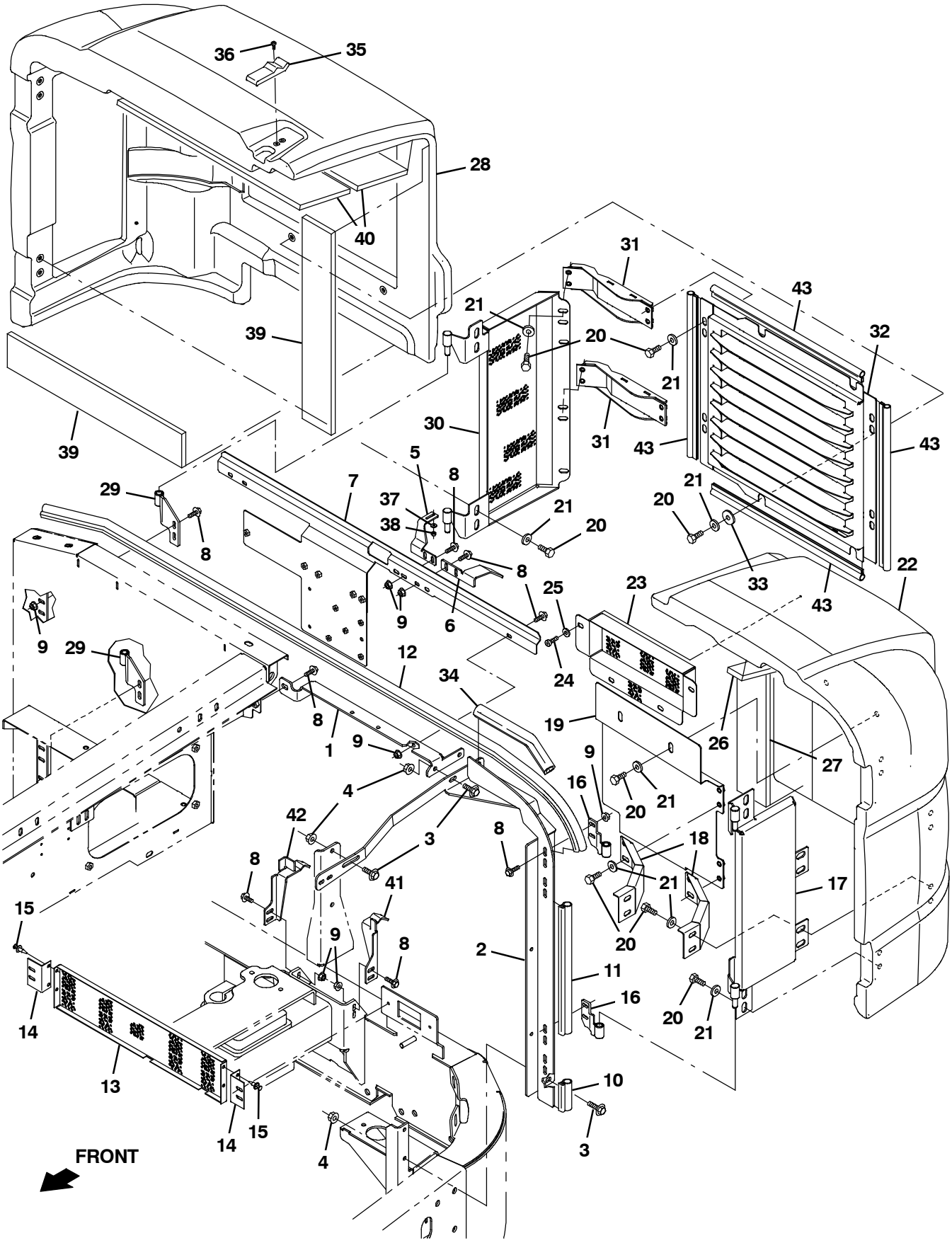

354681

Fig. 10 - Engine Cover Group, Rear (002100-)

Ref.	Part No.	Serial Number	Description	Qty.
1	1057778	(002100-)	Bracket, Sppt, Cover, Rear, Lh	1
2	1057776	(002100-)	Brace Wldt, Sppt	1
3	1037346	(002100-)	Screw, Hex, M8 X 1.25 X 25, 9.8, Sems	5
4	07791	(002100-)	Nut, Hex, Flng, M8 X 1.25	5
5	1060449	(002100-)	Bracket, Latch, Shrd	1
6	1059479	(002100-)	Bracket, Sppt, Shrd, Rear, Upper, Lh	1
7	1057786	(002100-)	Bracket, Sppt, Rear, Shrd	1
8	1036892	(002100-)	Screw, Hex, M6 X 1.00 X 25, 9.8, Sems	20
9	07790	(002100-)	Nut, Hex, Flng, M6 X 1.00	9
10	1030585	(002100-)	Seal, Afmkt, Bulb, 90, 0.75d F/11ga 01ft	1
11	1030588	(002100-)	Seal, Afmkt, Bulb, 90, 0.75d F/11ga 02ft	1
12	1030593	(002100-)	Seal, Afmkt, Bulb, 90, 0.75d F/11ga 08ft	1
13	1032962	(002100-)	Grill	1
14	1034378	(002100-)	Bracket, Grill	2
15	1040816	(002100-)	Rivet, Plstc, .250d X 0.90	4
16	1059874	(002100-)	Hinge Wldt, Shrd, Lh	2
17	1059996	(002100-)	Panel Wldt, Heat, Shield, Lh	1
18	1059211	(002100-)	Bracket, Sppt, Cover, Rear, Lh	2
19	1061000	(002100-)	Panel, Heat, Shield, Rear, Lh	1
20	16735	(002100-)	Screw, Hex, M8 X 1.25 X 16, 8.8	31
21	32491	(002100-)	Washer, Flat, 0.31, Std	21
22	9007974	(002100-)	Cover, Rear, Lh, Rotomold, Afmkt [S30]	1
23	1059440	(002100-)	Panel, Shrd, Eng	1
24	360973	(002100-)	Screw, Pan, 12-16 X 0.50, F/ Plstc	4
25	19066	(002100-)	Washer, Flat, 10	4
26	1061147	(002100-)	Insulation, Acstc, 0.5, 11.5 X 14.5 Adh	1
27	1061145	(002100-)	Insulation, Acstc, 0.5, 03.0 X 23.0 Adh	1
28	9007975	(002100-)	Cover, Rear, Rh, Rotomold, Afmkt [S30]	1
29	1060639	(002100-)	Hinge Wldt, Shrd, Rh	2
30	1059520	(002100-)	Grill Wldt, Screen, Rear, Rh	1
31	1059516	(002100-)	Bracket Wldt, Sppt, Cover, Rear, Rh	2
32	1059481	(002100-)	Grill Wldt, Rear, Rh	1
33	30013	(002100-)	Washer, Flat, 0.31, Fendr	4
34	1015274	(002100-)	Seal, Afmkt, Bulb, Str, 0.76, 0.93w 01ft	1
35	49800	(002100-)	Latch	1
36	06927	(002100-)	Screw, Pan, Phl, M4 X 0.70 X 16, 4.8	4
37	19064	(002100-)	Washer, Flat, 0.16b 0.38d .05, Pl, 06	2
38	02850	(002100-)	Nut, Hex, Lock, M4 X 0.70, Nl	2
39	1061145	(002100-)	Insulation, Acstc, 0.5, 03.0 X 23.0 Adh	2
40	1061146	(002100-)	Insulation, Acstc, 0.5, 05.5 X 23.0 Adh	2
41	1059477	(002100-)	Bracket, Sppt, Shrd, Rear, Lower, Lh	1
42	1059478	(002100-)	Bracket, Sppt, Shrd, Rear, Lower, Rh	1
43	1031623	(002100-)	Seal, Afmkt, Bulb, Str, .50d F/11ga 02ft	4

Fig. 11 - Engine Cover Group, Top (000000-002099)

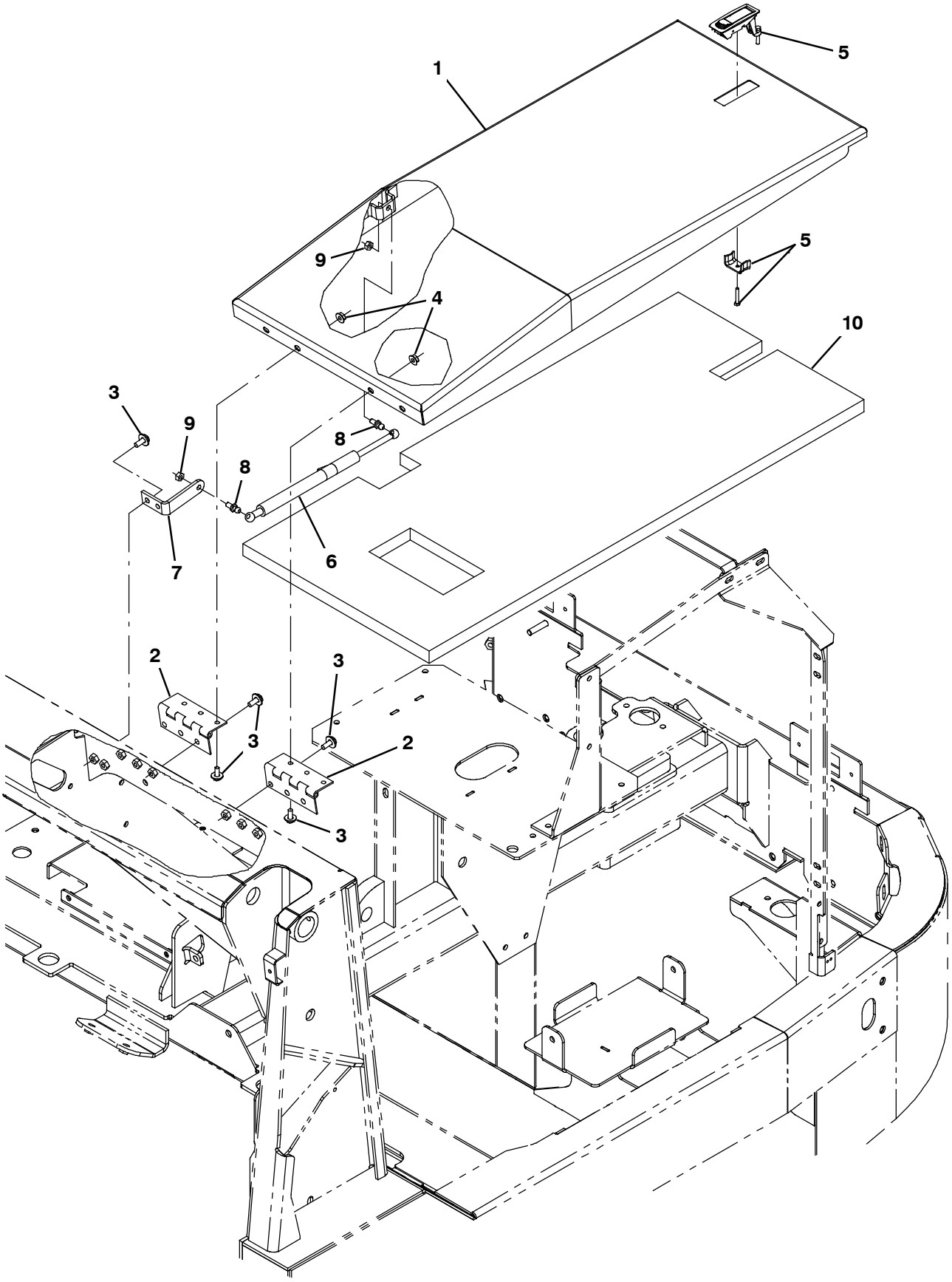

354682

Fig. 11 - Engine Cover Group, Top (000000-002099)

Ref.	Part No.	Serial Number	Description	Qty.
1	1032416	(000000-002099)	Cover Wldt, Top	1
2	74040	(000000-002099)	Hinge	2
3	1037346	(000000-002099)	Screw, Hex, M8 X 1.25 X 25, 9.8, Sems	10
4	07791	(000000-002099)	Nut, Hex, Flng, M8 X 1.25	4
5	398806	(000000-002099)	Latch	1
6	1036513	(000000-002099)	Gasspring, 072lb, 06.2strk	1
7	1032193	(000000-002099)	Angle, Mtg, Stl, .19 2.3 3.7 01.0l 3hole	1
8	58494	(000000-002099)	Stud, Ball, .39d .31-16, Gasspring	2
9	01760	(000000-002099)	Nut, Hex, Lock, .31-18, Nl, Thin	2
10	1035811	(000000-002099)	Insulation, Flame-Retardant, 1.0	1

Fig. 12 - Engine Cover Group, Top (002100-)

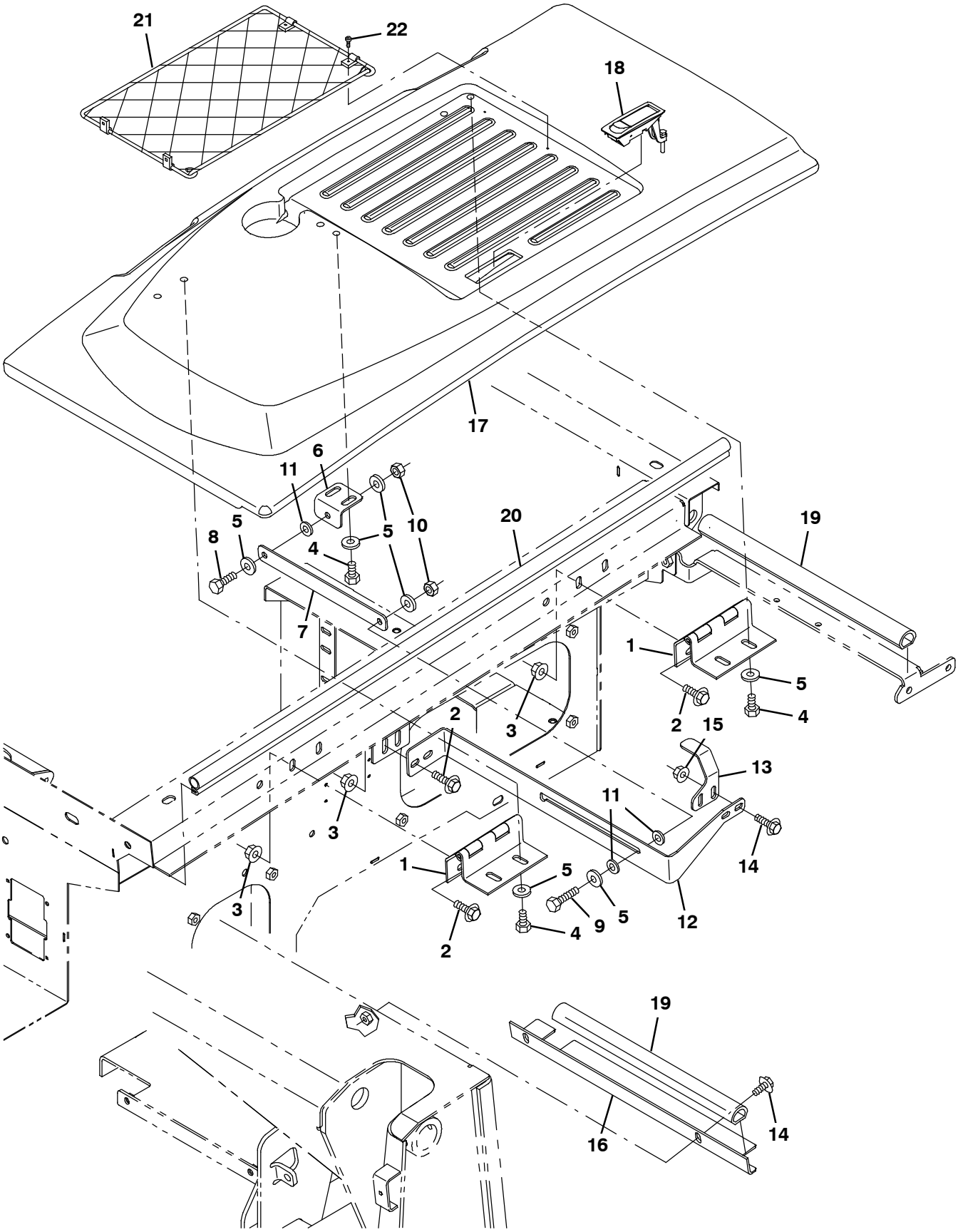

354682

Fig. 12 - Engine Cover Group, Top (002100-)

Ref.	Part No.	Serial Number	Description	Qty.
1	1057961	(002100-)	Hinge, .25pin .12, Cover, Top	2
2	1037346	(002100-)	Screw, Hex, M8 X 1.25 X 25, 9.8, Sems	6
3	07791	(002100-)	Nut, Hex, Flng, M8 X 1.25	6
4	16735	(002100-)	Screw, Hex, M8 X 1.25 X 16, 8.8	6
5	32491	(002100-)	Washer, Flat, 0.31, Std	10
6	1059285	(002100-)	Bracket, Prop, Rod, Cover	1
7	1059286	(002100-)	Plate, Prop, Rod	1
8	39277	(002100-)	Screw, Hex, M8 X 1.25 X 25, 8.8	1
9	06955	(002100-)	Screw, Hex, M8 X 1.25 X 35, 8.8	1
10	08709	(002100-)	Nut, Hex, Lock, M8 X 1.25, Nl	2
11	43611	(002100-)	Washer, Flat, 0.39b 0.75d .06, Nyl	3
12	1059276	(002100-)	Bracket, Sppt, Prop, Rod	1
13	1059291	(002100-)	Bracket, Latch, Cover, Top	1
14	1036892	(002100-)	Screw, Hex, M6 X 1.00 X 25, 9.8, Sems	4
15	07790	(002100-)	Nut, Hex, Flng, M6 X 1.00	2
16	1059269	(002100-)	Bracket, Angle, Lintel	1
17	9007976	(002100-)	Cover, Top, Rotomold, Afmkt [S30]	1
18	398806	(002100-)	Latch	1
19	1015273	(002100-)	Seal, Afmkt, Bulb, Str, 0.76, 0.93w 02ft	2
20	1030593	(002100-)	Seal, Afmkt, Bulb, 90, 0.75d F/11ga 08ft	1
21	CD001	(002100-)	Glovenet-525 Document Rack/Net 60200104-	1
22	1053318	(002100-)	Screw, Pan, Phl, 08-16 X 1.00, F/ Plstc	4

Fig. 13 - Engine Cover Group, Side (000000-002099)

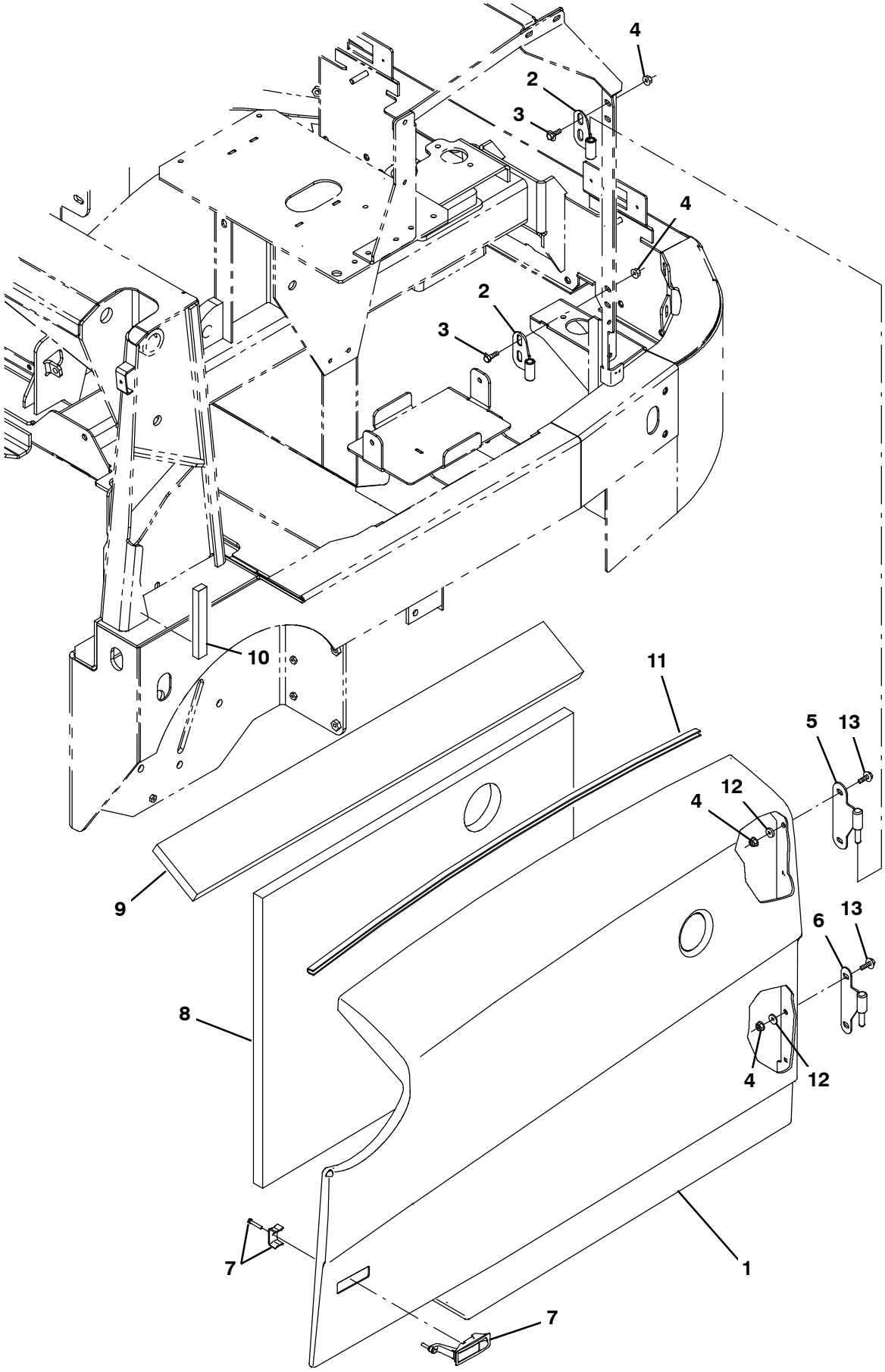

354683

Fig. 13 - Engine Cover Group, Side (000000-002099)

Ref.	Part No.	Serial Number	Description	Qty.
1	1029183	(000000-002099)	Cover, Side, Lh	1
2	1025196	(000000-002099)	Hinge Wldt, Shrd, Lh	2
3	1037346	(000000-002099)	Screw, Hex, M8 X 1.25 X 25, 9.8, Sems	4
4	07791	(000000-002099)	Nut, Hex, Flng, M8 X 1.25	8
5	1031641	(000000-002099)	Hinge Wldt, Shrd, Lh	1
6	1040707	(000000-002099)	Hinge Wldt, Shrd, Lower Lh	1
7	398806	(000000-002099)	Latch	1
8	1035812	(000000-002099)	Insulation, Flame-Retardant, 1.00	1
9	1035815	(000000-002099)	Insulation, Flame-Retardant, 1.00	1
10	1046418	(000000-002099)	Seal, Afmkt, Rbr, Open, Adh, 01ft	1
11	1046406	(000000-002099)	Molding, Afmkt, Trim, Pvc, .18 .31, 08ft	1
12	32491	(000000-002099)	Washer, Flat, 0.31, Std	4
13	1037354	(000000-002099)	Screw, Hex, M8 X 1.25 X 30, 9.8, Sems	4

Fig. 14 - Engine Cover Group, Side (002100-)

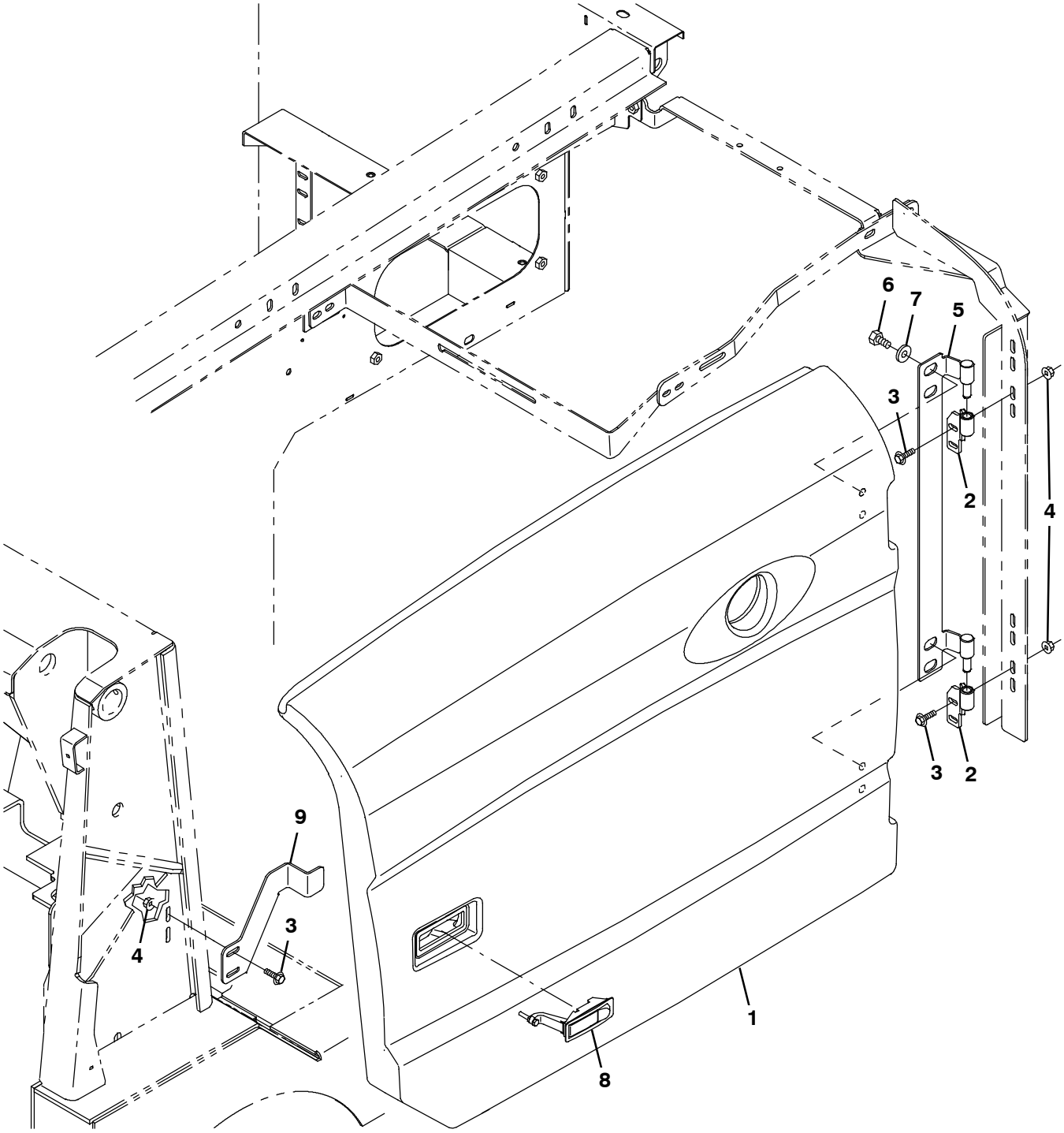

354683

Fig. 14 - Engine Cover Group, Side (002100-)

Ref.	Part No.	Serial Number	Description	Qty.
1	9007973	(002100-)	Cover, Side, Rotomold, Afmkt [S30]	1
2	1059874	(002100-)	Hinge Wldt, Shrd, Lh	2
3	1036892	(002100-)	Screw, Hex, M6 X 1.00 X 25, 9.8, Sems	6
4	07790	(002100-)	Nut, Hex, Flng, M6 X 1.00	6
5	1059868	(002100-)	Hinge Wldt, Shrd, Side, Lh	1
6	16735	(002100-)	Screw, Hex, M8 X 1.25 X 16, 8.8	4
7	1017218	(002100-)	Washer, Flat, 0.32b 1.00d .12, Ss	4
8	398806	(002100-)	Latch	1
9	1059221	(002100-)	Bracket, Latch, Side, Door	1

Fig. 15 - Instrument Panel Group, S30

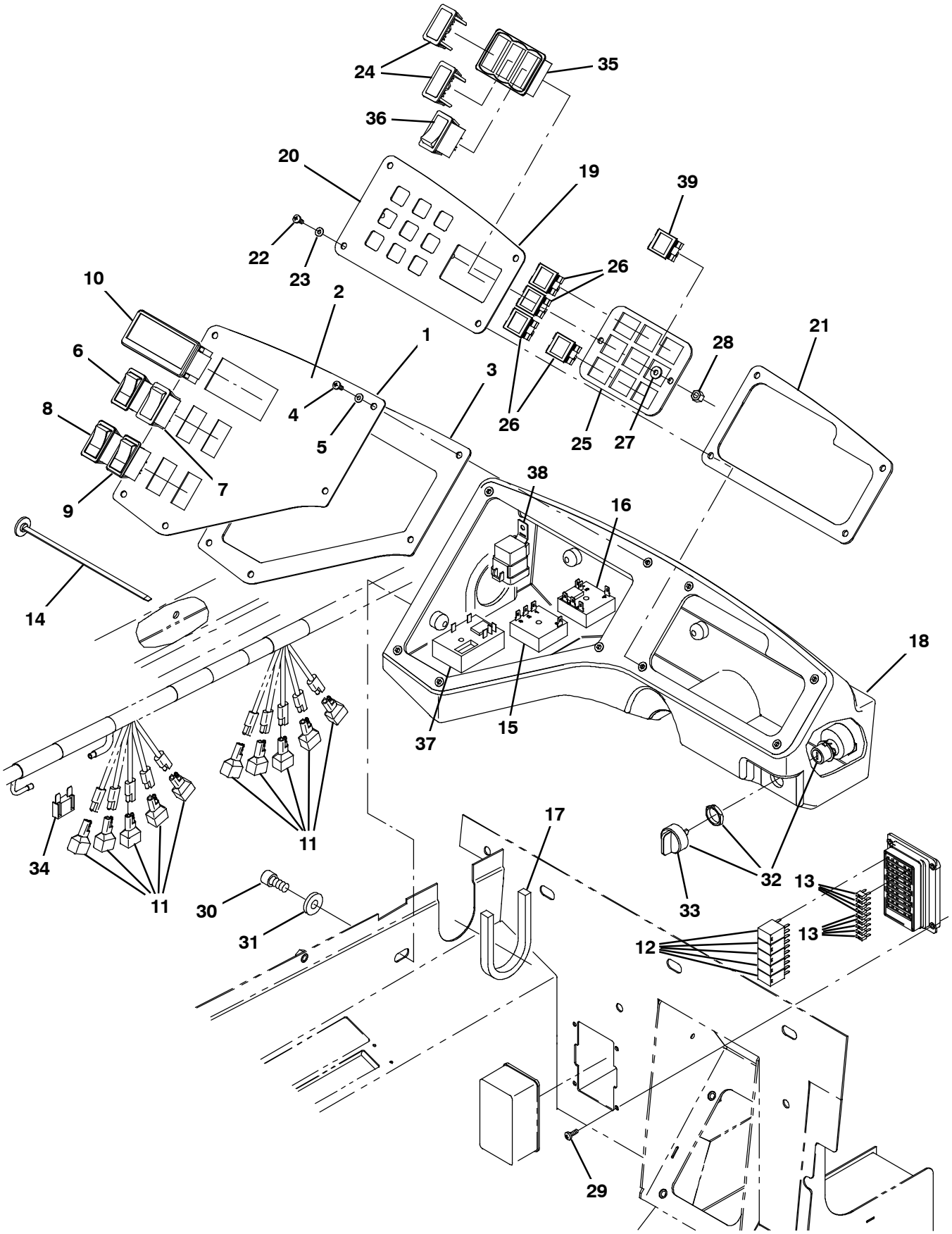

354730

Fig. 15 - Instrument Panel Group, S30

	Ref.	Part No.	Serial Number	Description	Qty.
▽		9004529	(000000-)	Panel Assy, Instmt, Basic, Replmt	1
▲	1	1031683	(000000-)	Panel, Instrument, Basic	1
▲	2	1033884	(000000-)	Label, Panl, Instmt, Basic	1
▲	3	1031211	(000000-)	Gasket, Panel, Instmt	1
▲	4	1045487	(000000-)	Screw, Pan, Phl, M5 X 0.80 X 16, Blk	5
▲	5	1012615	(000000-)	Washer, Flat, 0.19b 0.44d .03, Nyl, Blk	5
	6	377084	(000000-)	Switch, Rocker, Prgrsv	1
	7	398528	(000000-)	Switch, Rocker, Dpdt, On / Off / Mom	1
	8	398508	(000000-)	Switch, Rocker, Dpdt, Mom / Off / Mom	1
	9	397889	(000000-)	Switch, Rocker, Dpst, On / None / On	1
	10	1028750	(000000-)	Indicator, Ele, [Multi-Display]	1
	11	222290	(000000-)	Diode, Ele, Plug	10
	12	1028832	(000000-)	Relay, 12vdc, 35a, Spdt [Micro 280]	5
	13	1030985	(000000-)	Fuse, Blade, 15a, 32v [Mini]	9
	14	1041873	(000000-)	Fastener, Wire, Tie [Button Head]	2
	15	34816	(000000-)	Timer, 12vdc, 30sec On	1
	16	1030813	(000000-)	Timer, 12vdc, 6sec Spcl [Tosr116]	1
	17	1035153	(000000-)	Gasket,Harness	1
	18	1035507	(000000-)	Box, Instrument, Ii, Trimmed	1
▽		9004528	(000000-)	Panel Assy, Switch, Replmt	1
▲	19	1033771	(000000-)	Panel, Switch Ii	1
▲	20	1033883	(000000-)	Label, Panl, Instmt, Rh	1
▲	21	1031664	(000000-)	Gasket, Panel, Switch	1
▲	22	1045487	(000000-)	Screw, Pan, Phl, M5 X 0.80 X 16, Blk	4
▲	23	1012615	(000000-)	Washer, Flat, 0.19b 0.44d .03, Nyl, Blk	4
	24	398501	(000000-)	Plug, Hole, Rt, Rocker Switch, .87 X 1.7	2
	25	1033760	(000000-)	Panel, Light	1
	26	361075	(000000-)	Light, Panl, 14vdc, 1.1 X 1.0	4
	27	19066	(000000-)	Washer, Flat, 10	2
	28	08708	(000000-)	Nut, Hex, Lock, M6 X 1.00, Nl	2
	29	39239	(000000-)	Screw, Pan, Phl, 10-32 X 0.50, G2, Blk	4
	30	1056769	(000000-)	Screw, Soc, M10 X 1.50 X 16, 12.9	4
	31	32485	(000000-)	Washer, Flat, 0.38, Sae	4
▽	32	1028790	(000000-)	Switch, Key, 4 Pos [Honeywell]	1
▲	33	9004545	(000000-)	Key, Ignition [Replmt W/O Dust Boot]	1
	34	394922	(000000-)	Fuse, Blade, 060a [Maxi]	1
	35	1029951	(000000-)	Bezel, Switch [3 Gang]	1
	36	377084	(000000-)	Switch, Rocker, Prgrsv (Operating Lights)	1
	37	1046893	(000000-)	Timer, 12vdc, 10a [Ce Seat Switch] (CE Only)	1
	38	56186	(000000-)	Relay, 12vdc, 040a, Spdt No (CE Only)	1
	39	361075	(000000-)	Light, Panl, 14vdc, 1.1 X 1.0 (CE Only)	1

Fig. 16 - Instrument Panel Group, S30 XP

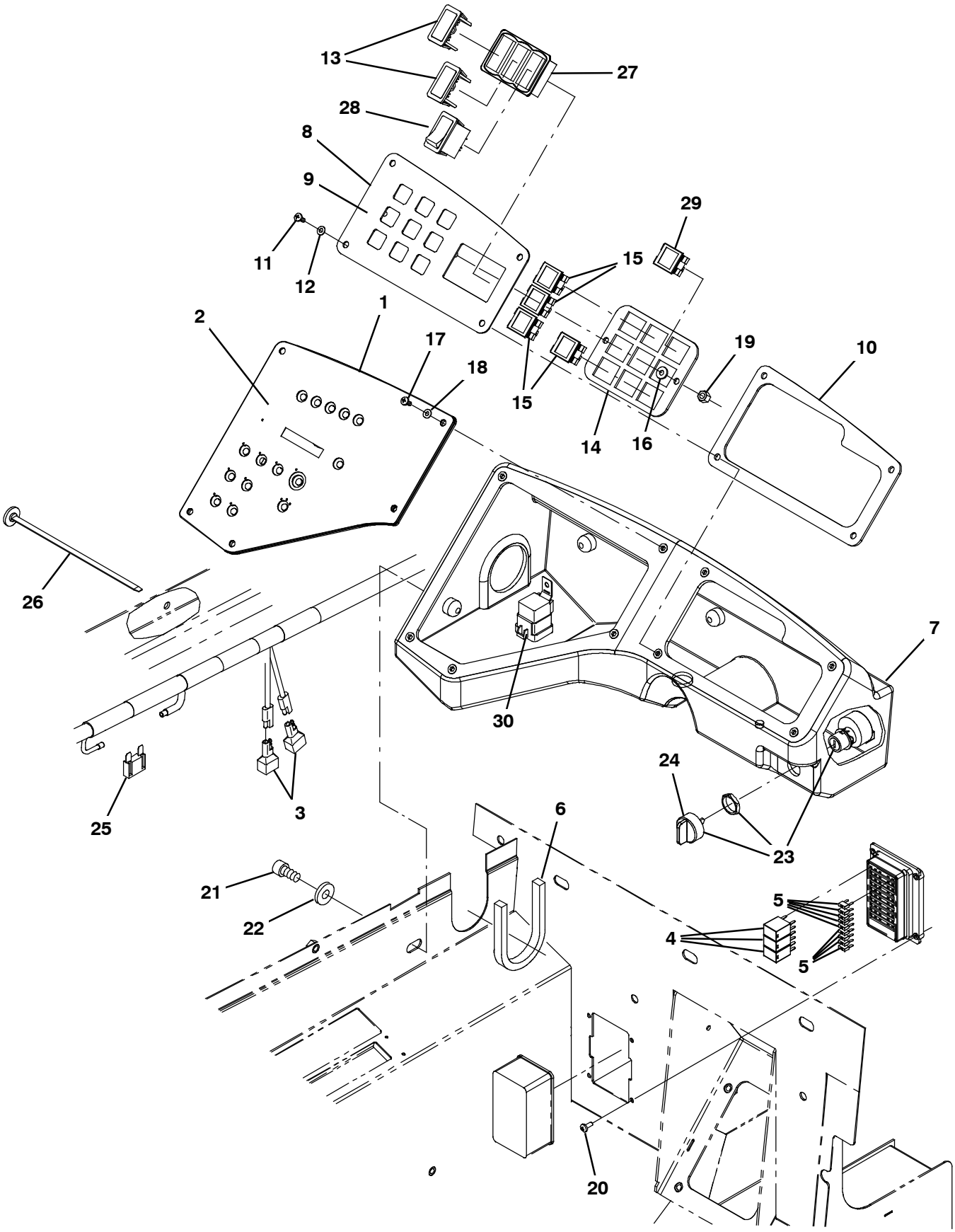

354731

Fig. 16 - Instrument Panel Group, S30 XP

	Ref.	Part No.	Serial Number	Description	Qty.
	1	9004513	(000000-)	Panel Kit, Replmt [S30]	1
	2	9004325	(000000-)	Panel Kit, Label, Replmt [S30]	1
	3	222290	(000000-)	Diode, Ele, Plug	2
	4	1028832	(000000-)	Relay, 12vdc, 35a, Spdt [Micro 280]	3
	5	1030985	(000000-)	Fuse, Blade, 15a, 32v [Mini]	9
	6	1035153	(000000-)	Gasket,Harness	1
	7	1035507	(000000-)	Box, Instrument, Ii, Trimmed	1
▽		9004528	(000000-)	Panel Assy, Switch, Replmt	1
▲	8	1033771	(000000-)	Panel, Switch Ii	1
▲	9	1033883	(000000-)	Label, Panl, Instmt, Rh	1
▲	10	1031664	(000000-)	Gasket, Panel, Switch	1
▲	11	1045487	(000000-)	Screw, Pan, Phl, M5 X 0.80 X 16, Blk	4
▲	12	1012615	(000000-)	Washer, Flat, 0.19b 0.44d .03, Nyl, Blk	4
	13	398501	(000000-)	Plug, Hole, Rt, Rocker Switch, .87 X 1.7	2
	14	1033760	(000000-)	Panel, Light	1
	15	361075	(000000-)	Light, Panl, 14vdc, 1.1 X 1.0	4
	16	19066	(000000-)	Washer, Flat, 10	2
	17	1045487	(000000-)	Screw, Pan, Phl, M5 X 0.80 X 16, Blk	5
	18	1012615	(000000-)	Washer, Flat, 0.19b 0.44d .03, Nyl, Blk	5
	19	08708	(000000-)	Nut, Hex, Lock, M6 X 1.00, Nl	2
	20	39239	(000000-)	Screw, Pan, Phl, 10-32 X 0.50, G2, Blk	4
	21	1056769	(000000-)	Screw, Soc, M10 X 1.50 X 16, 12.9	4
	22	32485	(000000-)	Washer, Flat, 0.38, Sae	4
▽	23	1028790	(000000-)	Switch, Key, 4 Pos [Honeywell]	1
▲	24	9004545	(000000-)	Key, Ignition [Replmt W/O Dust Boot]	1
	25	394922	(000000-)	Fuse, Blade, 060a [Maxi]	1
	26	1041873	(000000-)	Fastener, Wire, Tie [Button Head]	2
	27	1029951	(000000-)	Bezel, Switch [3 Gang]	1
	28	377084	(000000-)	Switch, Rocker, Prgrsv (Operating Lights)	1
	29	361075	(000000-)	Light, Panl, 14vdc, 1.1 X 1.0 (CE Only)	1
	30	56186	(000000-)	Relay, 12vdc, 040a, Spdt No (CE Only)	1

Fig. 17 - Steering Group (000000-002099)

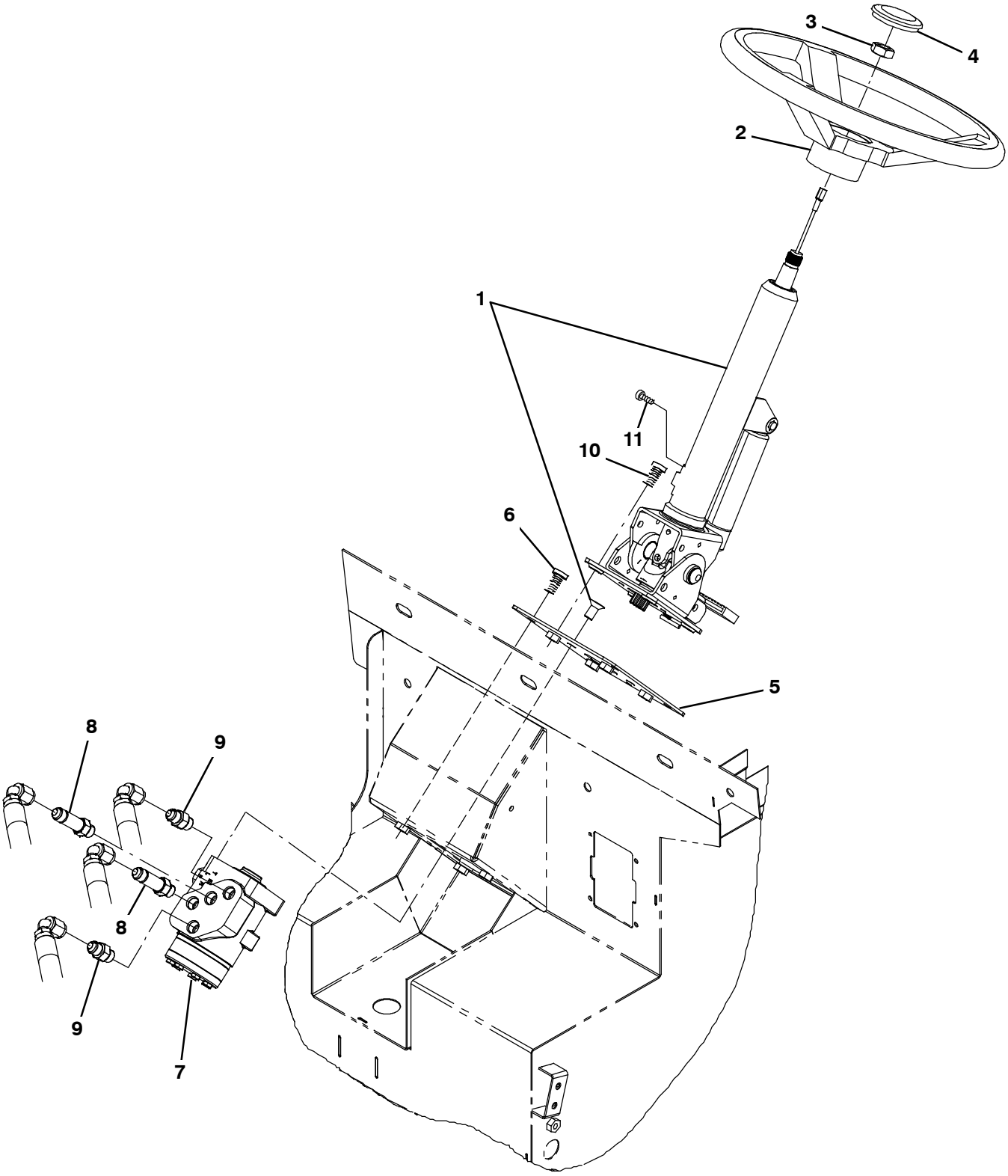

354684

Fig. 17 - Steering Group (000000-002099)

	Ref.	Part No.	Serial Number	Description	Qty.
▽	1	1031621	(000000-002099)	Column, Steering, Tilt	1
▲		1040962	(000000-002099)	Bolt Kit, M10 X 1.50 X 16, Thin	1
	2	1058996	(000000-002099)	Wheel, Steering, 14.0d 0.81b 36tooth	1
	3	56185	(000000-002099)	Nut, Hex, Jam, M20 X 1.5	1
	4	1024478	(000000-002099)	Button, Cntrl, Horn	1
	5	1034803	(000000-002099)	Plate, Mtg, Steer-Control	1
	6	49609	(000000-002099)	Screw, Soc, M8 X 1.25 X 16, 12.9	4
	7	1024260	(000000-002099)	Steer-Control, Hyd05, 06.1 2030 (See Breakdowns)	1
	8	59577	(000000-002099)	Fitting, Hyd, Str, Jm06/Om06, Long	2
	9	56690	(000000-002099)	Fitting, Hyd, Str, Jm06/Om06	2
	10	39309	(000000-002099)	Screw, Soc, M10 X 1.50 X 25, 12.9	4
	11	06926	(000000-002099)	Screw, Pan, Phl, M4 X 0.70 X 10, 4.8	1

Fig. 18 - Steering Group (002100-)

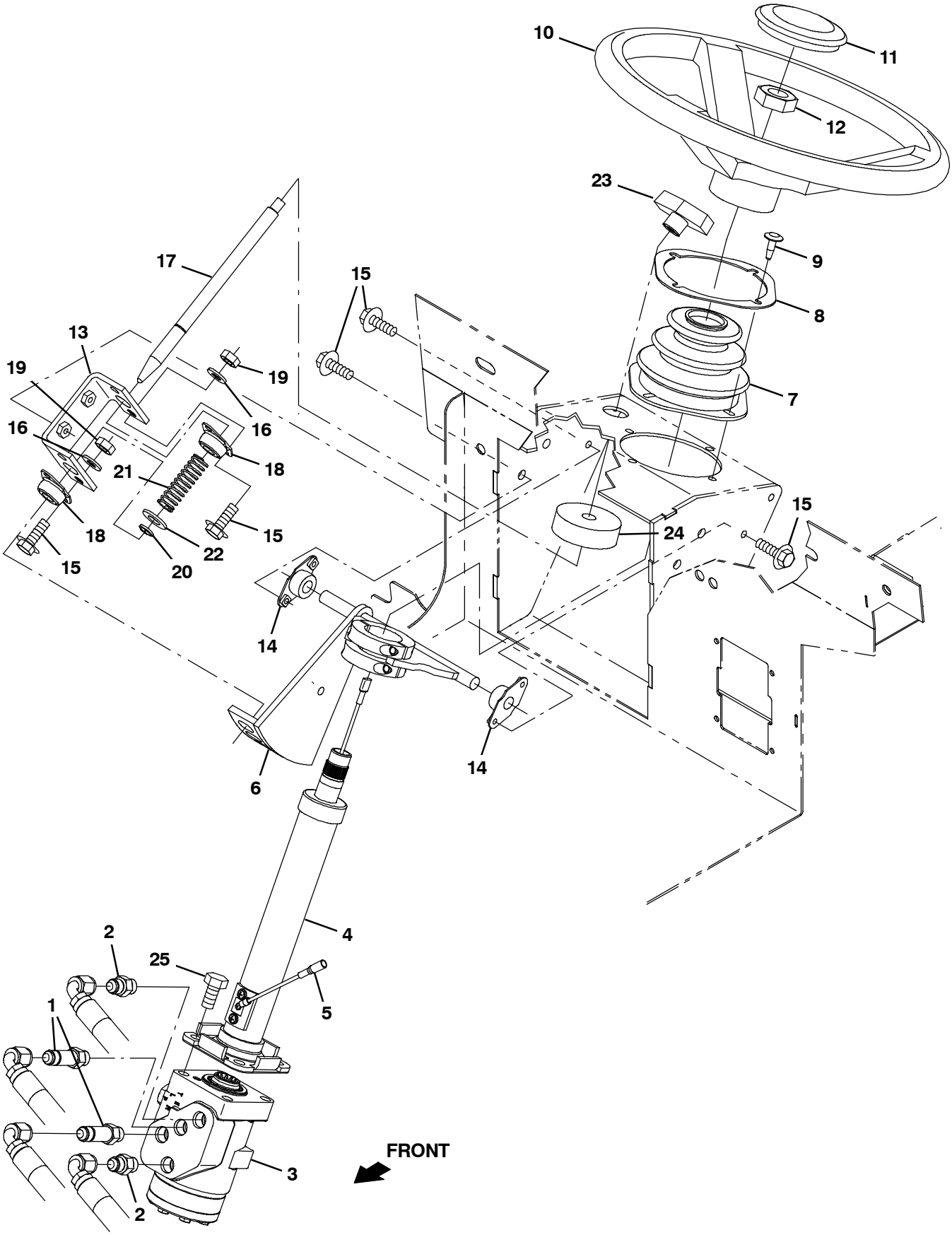

354684

Fig. 17 - Steering Group (002100-)

	Ref.	Part No.	Serial Number	Description	Qty.
	1	59577	(002100-002999)	Fitting, Hyd, Str, Jm06/Om06, Long	1
	1	771090	(003000-)	Fitting, Hyd, Str, Fm06/Om06, Long	1
	2	56690	(002100-002999)	Fitting, Hyd, Str, Jm06/Om06	1
	2	762433	(003000-)	Fitting, Hyd, Str, Fm06/Om06	1
	3	1024260	(002100-)	Steer-Control, Hyd05, 06.1 2030	1
▽	4	1021265	(002100-)	Column, Steering, 09.9l 0.86d 36tooth	1
▲	5	388153	(002100-)	Contact Kit, W/ Brush [En]	1
	6	1058784	(002100-)	Bracket Wldt, Steering, Tilt	1
	7	70622	(002100-)	Boot, Bellows, 3.1l 4.4w 2.8h 1hole, Neo	1
	8	70623	(002100-)	Retainer, Boot, Steering Column	1
	9	72970	(002100-)	Rivet, Plstc, .250d X 0.90	4
	10	1058996	(002100-)	Wheel, Steering, 14.0d 0.81b 36tooth	1
	11	1024478	(002100-)	Button, Cntrl, Horn	1
	12	56185	(002100-)	Nut, Hex, Jam, M20 X 1.5	1
	13	1058807	(002100-)	Flange, Brg, Mount	1
	14	70709	(002100-)	Bearing, Flng, 2hole, 0.50b	2
	15	1040467	(002100-)	Screw, Hex, M6 X 1.00 X 20, 9.8, Sems	8
	16	32483	(002100-)	Washer, Flat, 0.25, Sae	4
	17	1058785	(002100-)	Pin, Locking, Steering, Tilt [S30]	1
	18	47585	(002100-)	Bearing, Flng, 2hole, 0.50b [Nyl]	2
	19	08708	(002100-)	Nut, Hex, Lock, M6 X 1.00, Nl	4
	20	70717	(002100-)	Ring, Retaining, Ext, 0.50d, Hd	1
	21	22290	(002100-)	Spring, Cmpr, 0.72od .06wir 02.3l	1
	22	32486	(002100-)	Washer Flat,0.50,Sae	1
	23	04706	(002100-)	Knob, Tee, 0.38-16, 2.5 X 1.0 1.1l,Plstc	1
	24	75968	(002100-)	Insulation, Acstc, Rnd, 0.8, 02.5d 0.5h	1
	25	06961	(002100-)	Screw, Hex, M10 X 1.50 X 20, 8.8	4

Fig. 19 - Engine and Mount Group, Gas/LPG (000000-005699)

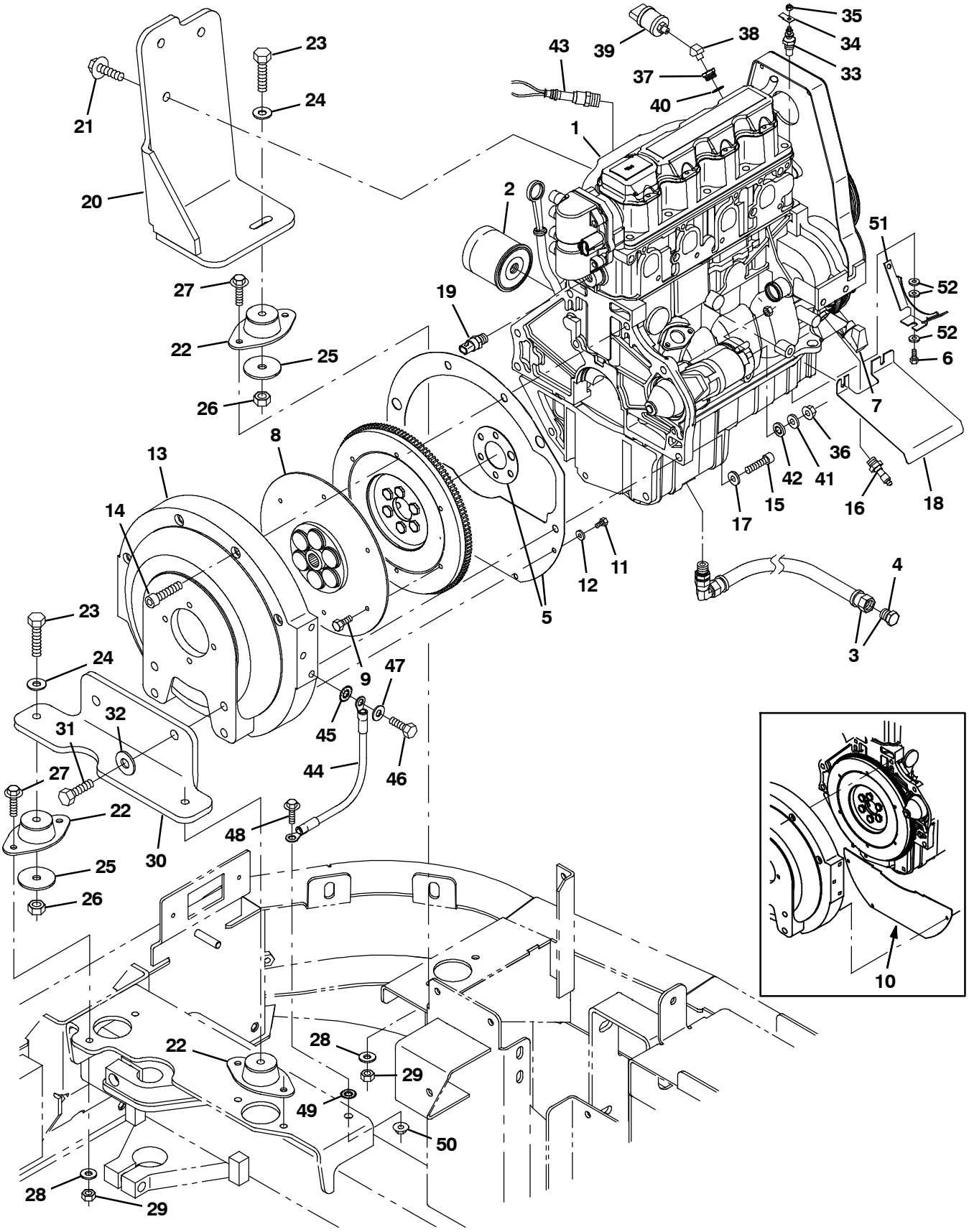

354660- G, LP

Fig. 19 - Engine and Mount Group, Gas/LPG (000000-005699)

	Ref.	Part No.	Serial Number	Description	Qty.
▽	1	372862	(000000-005699)	Engine, Block, Long [Gm1.6l] (See Engine Breakdown)	1
▲	2	371972	(000000-005699)	Element, Fltr, Oil, Eng, Spin-On	1
▽	3	9006634	(000000-005699)	Hose, Drain, Engine Oil	1
▲	4	9006635	(000000-005699)	Fitting, Plug	1
	5	9006895	(000000-005699)	Plate Kit, Repair	1
	6	06943	(001857-005699)	Screw, Hex, M6 X 1.00 X 20, 8.8	1
	7	372002	(000000-005699)	Sensor, Position, Cshft	1
	8	371866	(000000-005699)	Coupling, Drive, 13t	1
	9	372554	(000000-005699)	Screw, Hex, M07-1.00 X 23.0, 8.8	6
	10	371868	(000000-005699)	Cover, Hsng, Flywheel Rep.by9006895	1
	11	19315	(000000-005699)	Screw, Hex, .25-20 X 0.50, G5	4
	12	32490	(000000-005699)	Washer, Flat, 0.25, Std	4
	13	371869	(000000-005699)	Housing, Pump	1
	14	371870	(000000-005699)	Screw, Soc, M12 X 1.75 X 55, 10.9	4
	15	10832	(000000-005699)	Screw, Soc, .38-16 X 1.50, Al	2
	16	371996	(000000-002003)	Switch, Indicator, Oil Press	1
	16	9008197	(002004-005699)	Switch, Indicator, Oil Press [2010]	1
	17	371877	(000000-005699)	Washer, Flat, 0.38, Hardened	2
	18	372556	(000000-005699)	Shield, Starter [1.6l]	1
	19	372953	(000000-005699)	Sensor, Temp, Coolant	1
	20	1026540	(000000-005699)	Plate, Mtg, Eng	1
	21	1037358	(000000-005699)	Screw, Hex, M10 X 1.50 X 35, 9.8, Sems	3
	22	1029018	(000000-005699)	Isolator, Vib, Flng, 1.3h .4b 2/.34h	3
	23	06963	(000000-005699)	Screw, Hex, M10 X 1.50 X 60, 8.8	3
	24	32492	(000000-005699)	Washer, Flat, 0.38, Std	3
	25	58228	(000000-005699)	Washer, Flat, 0.44b 2.00d .12, Stl, Pl	3
	26	41430	(000000-005699)	Nut, Hex, Lock, M10 X 1.5, Nl	3
	27	1037354	(000000-005699)	Screw, Hex, M8 X 1.25 X 30, 9.8, Sems	6
	28	32491	(000000-005699)	Washer, Flat, 0.31, Std	6
	29	08709	(000000-005699)	Nut, Hex, Lock, M8 X 1.25, Nl	6
	30	1026600	(000000-005699)	Bracket, Mtg, Eng	1
	31	39810	(000000-005699)	Screw, Hex, .50-13 X 1.25, G5	2
	32	32493	(000000-005699)	Washer, Flat, 0.50, Std	2
	33	58592	(000000-005699)	Send-Unit, Water, Temp,04npt[113oh/195d]	1
	34	68106	(000000-005699)	Terminal, Tab, .25 .19h .84l	1
	35	50335	(000000-005699)	Nut, Hex, Std, M5 X 0.80, 8	1
	36	41361	(000000-005699)	Nut, Hex, Std, M8 X 1.25, Brs	1
	37	1031439	(000000-005699)	Fitting, Pipe, Bshg, M18 X 1.5	1
	38	24976	(000000-005699)	Fitting, Brs, E45, Pf02/Pm02	1
	39	1055106	(000000-005699)	Switch, Press, 0006psi Dpdt	1
	40	385029	(000000-005699)	Gasket, Plug, Relief Valve,Oil Press	1
	41	39349	(000000-005699)	Washer, Flat, 0.31, Sae	1
	42	32984	(000000-005699)	Washer, Lock, Int, 0.31	1
	43	1028559	(000000-002003)	Sensor, Oxygen [Gm 1.6l/3.0l 2007]	1
	43	1028558	(002004-005699)	Sensor, Exhaust, Tailpipe	1
	44	57773	(000000-005699)	Cable, 06ga 13.0l Blk	1
	45	41142	(000000-005699)	Washer, Lock, Int-ext, 0.38	1
	46	21196	(000000-005699)	Screw, Hex, .38-16 X 0.88, G5	1
	47	32485	(000000-005699)	Washer, Flat, 0.38, Sae	1
	48	1036892	(000000-005699)	Screw, Hex, M6 X 1.00 X 25, 9.8 Sems	1
	49	41140	(000000-005699)	Washer, Lock, Int-ext, 0.25	1
	50	07790	(000000-005699)	Nut, Hex, Flng, M6 X 1.00	1
	51	1056566	(001857-005699)	Plate, Guard, Belt [Gm 1.6l]	1
	52	32490	(001857-005699)	Washer, Flat, 0.25, Std	3

Fig. 20 - Engine and Mount Group, Gas (005700-)

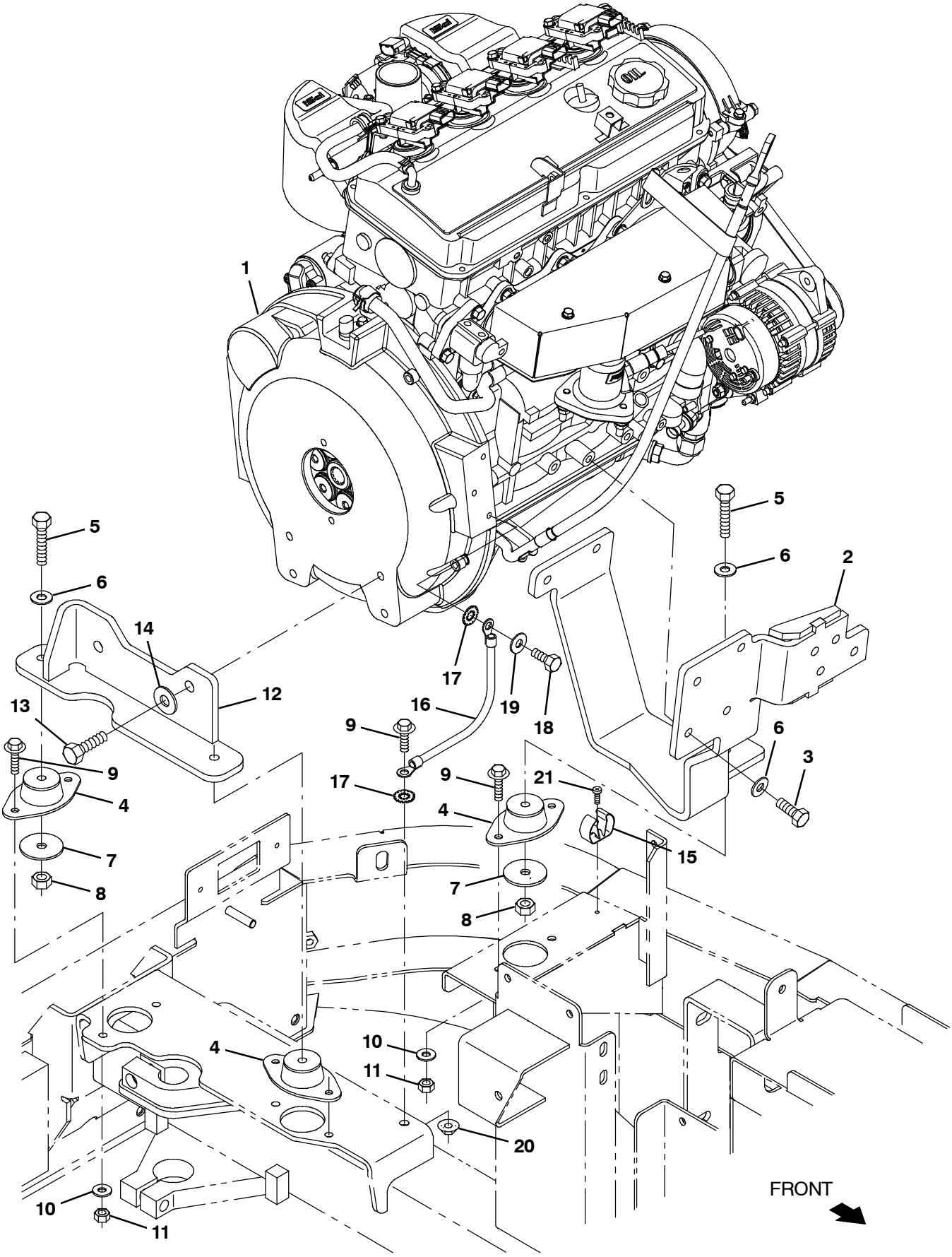

356364 - G

Fig. 20 - Engine and Mount Group, Gas (005700-)

Ref.	Part No.	Serial Number	Description	Qty.
1	1071155	(005700-)	Engine, Gas [Mitsubishi] (See Engine Breakdown)	1
2	1071606	(005700-)	Bracket Wldt, Mtg, Eng, Front	1
3	07299	(005700-)	Screw, Hex, M10 X 1.25 X 25, 8.8	6
4	1029018	(005700-)	Isolator, Vib, Flng, 1.3h .4b 2/.34h	3
5	06963	(005700-)	Screw, Hex, M10 X 1.50 X 60, 8.8	3
6	32492	(005700-)	Washer, Flat, 0.38, Std	9
7	58228	(005700-)	Washer, Flat, 0.44b 2.00d .12, Stl, Pl	3
8	41430	(005700-)	Nut, Hex, Lock, M10 X 1.5, Nl	3
9	1037354	(005700-)	Screw, Hex, M8 X 1.25 X 30, 9.8, Sems	7
10	32491	(005700-)	Washer, Flat, 0.31, Std	6
11	08709	(005700-)	Nut, Hex, Lock, M8 X 1.25, Nl	6
12	1070999	(005700-)	Bracket Wldt, Mtg, Eng, Rear [Mit 2013]	1
13	41346	(005700-)	Screw, Hex, M12 X 1.75 X 30, 8.8	2
14	32486	(005700-)	Washer Flat,0.50,Sae	2
15	1014295	(005700-)	Clip, Grip, Hose, 0.75-1.12, Stl,Blk Vyl	1
16	57773	(005700-)	Cable, 06ga 13.0l Blk	1
17	41142	(005700-)	Washer, Lock, Int-ext, 0.38	2
18	21196	(005700-)	Screw, Hex, .38-16 X 0.88, G5	1
19	32485	(005700-)	Washer, Flat, 0.38, Sae	1
20	07791	(005700-)	Nut, Hex, Flng, M8 X 1.25	1
21	06933	(005700-)	Screw, Pan, Phl, M5 X 0.80 X 16, 4.8	1

Fig. 21 - Engine and Mount Group, Lpg (005700-)

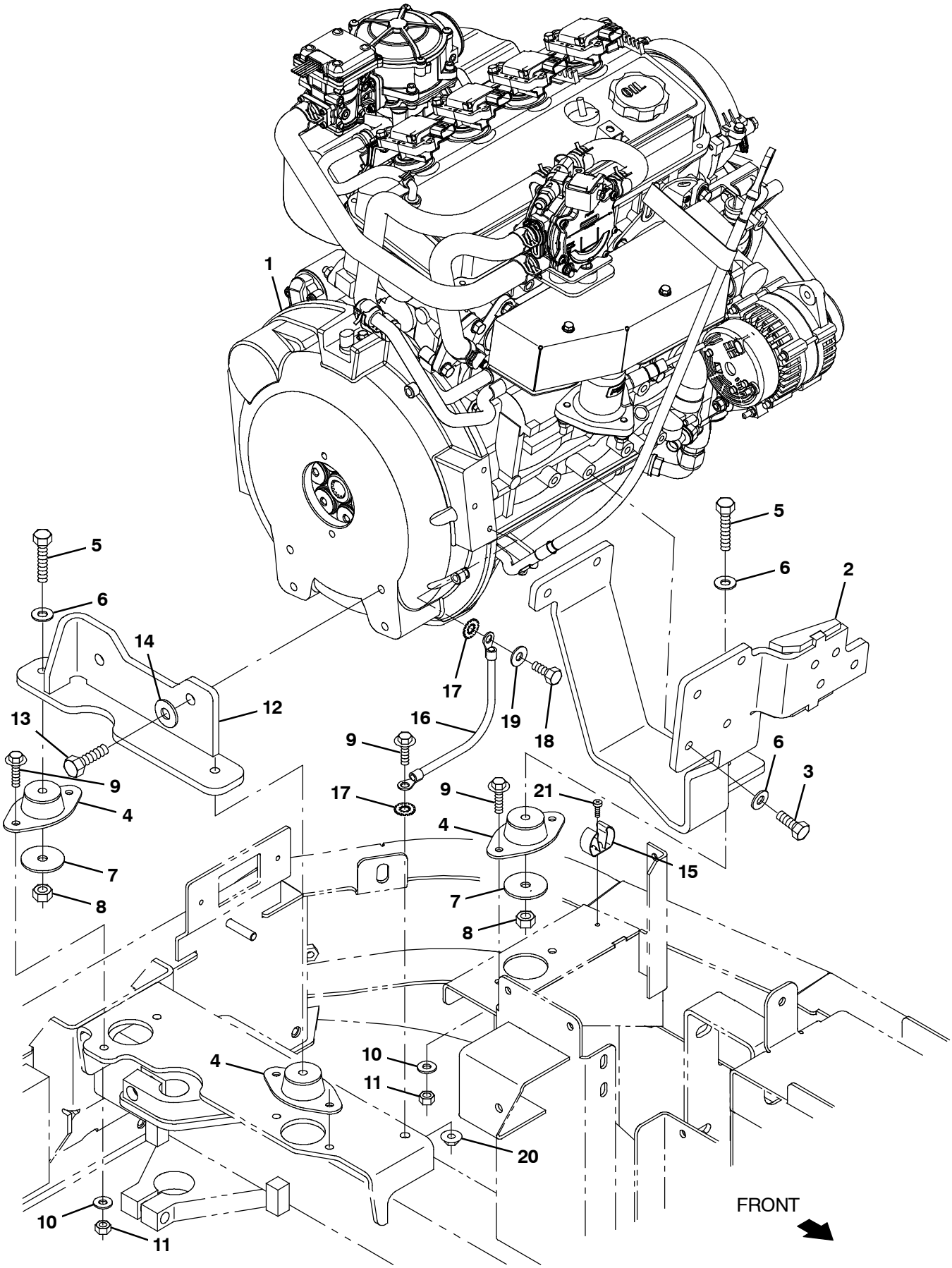

356363 - LP

Fig. 21 - Engine and Mount Group, LPG (005700-)

Ref.	Part No.	Serial Number	Description	Qty.
1	1070348	(005700-)	Engine, Lpg [Mitsubishi] (See Engine Breakdown)	1
2	1071606	(005700-)	Bracket Wldt, Mtg, Eng, Front	1
3	07299	(005700-)	Screw, Hex, M10 X 1.25 X 25, 8.8	6
4	1029018	(005700-)	Isolator, Vib, Flng, 1.3h .4b 2/.34h	3
5	06963	(005700-)	Screw, Hex, M10 X 1.50 X 60, 8.8	3
6	32492	(005700-)	Washer, Flat, 0.38, Std	9
7	58228	(005700-)	Washer, Flat, 0.44b 2.00d .12, Stl, Pl	3
8	41430	(005700-)	Nut, Hex, Lock, M10 X 1.5, Nl	3
9	1037354	(005700-)	Screw, Hex, M8 X 1.25 X 30, 9.8, Sems	7
10	32491	(005700-)	Washer, Flat, 0.31, Std	6
11	08709	(005700-)	Nut, Hex, Lock, M8 X 1.25, Nl	6
12	1070999	(005700-)	Bracket Wldt, Mtg, Eng, Rear [Mit 2013]	1
13	41346	(005700-)	Screw, Hex, M12 X 1.75 X 30, 8.8	2
14	32486	(005700-)	Washer Flat,0.50,Sae	2
15	1014295	(005700-)	Clip, Grip, Hose, 0.75-1.12, Stl,Blk Vyl	1
16	57773	(005700-)	Cable, 06ga 13.0l Blk	1
17	41142	(005700-)	Washer, Lock, Int-ext, 0.38	2
18	21196	(005700-)	Screw, Hex, .38-16 X 0.88, G5	1
19	32485	(005700-)	Washer, Flat, 0.38, Sae	1
20	07791	(005700-)	Nut, Hex, Flng, M8 X 1.25	1
21	06933	(005700-)	Screw, Pan, Phl, M5 X 0.80 X 16, 4.8	1

Fig. 22 - Engine EFI Group, Gas (000000-005699)

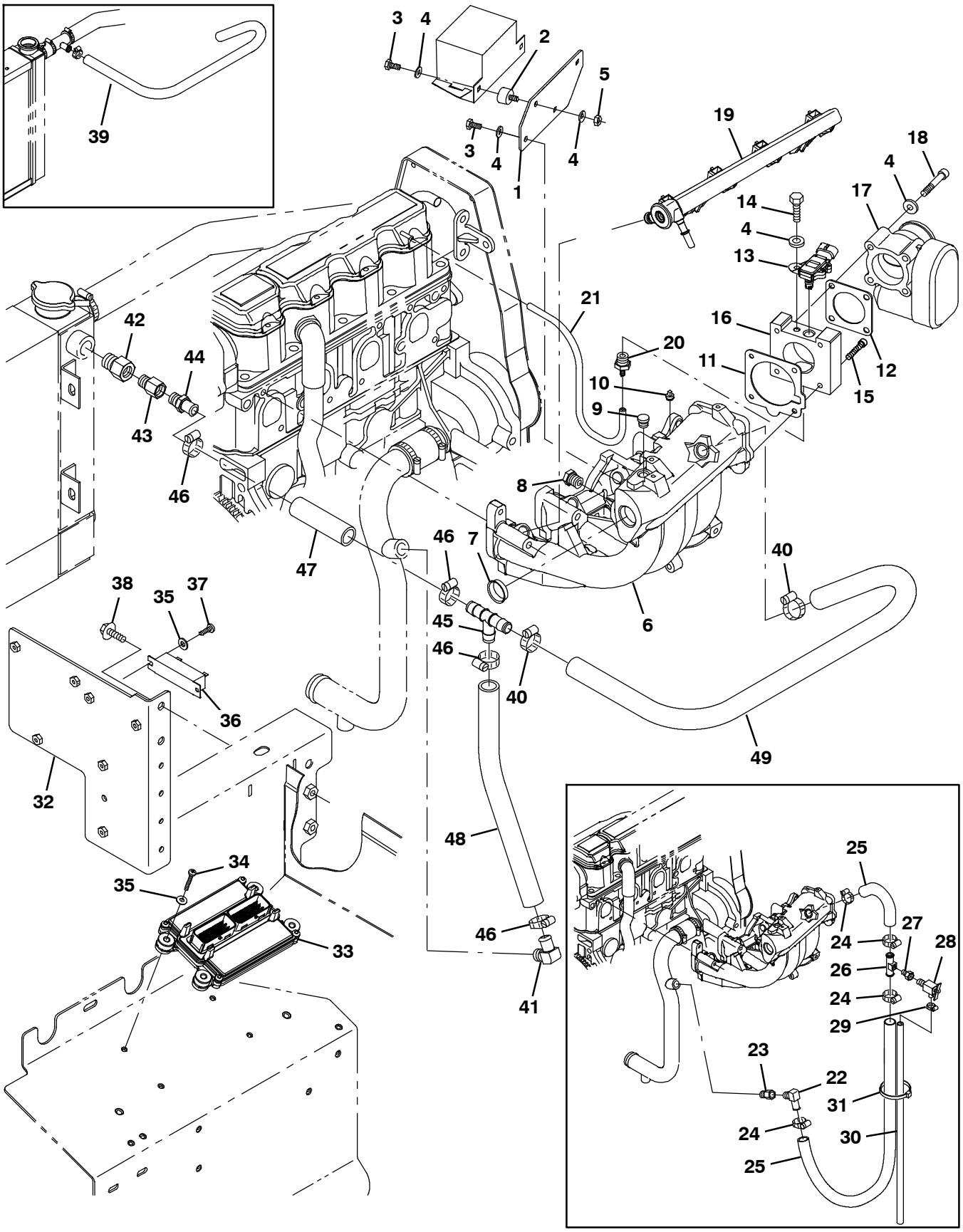

354661

Fig. 22 - Engine EFI Group, Gas (000000-005699)

	Ref.	Part No.	Serial Number	Description	Qty.
	1	1031312	(000000-005699)	Plate, Mtg, Relay	1
	2	372470	(000000-005699)	Isolator, Box, Relay	2
	3	19315	(000000-005699)	Screw, Hex, .25-20 X 0.50, G5	4
	4	32490	(000000-005699)	Washer, Flat, 0.25, Std	13
	5	19312	(000000-005699)	Nut, Hex, Std, .25-20	2
	6	372547	(000000-005699)	Manifold, Intake [1.6l]	1
	7	372549	(000000-005699)	Plug, Manifold, Intake	1
	8	384995	(000000-005699)	Fitting, Plug, M16, Intake Manifold	1
	9	372550	(000000-005699)	Plug, Port, Sensor [Map]	1
	10	372548	(000000-005699)	Plug, .12npt, Ss	1
▽		9003390	(000000-005699)	Gasket Kit, Repair, Gas [Gm1.6l 2007]	1
▲	11	372544	(000000-005699)	Gasket, Manifold, Intake	1
▲	12	372545	(000000-005699)	Gasket, Body, Throttle [1.6l]	1
	13	384985	(000000-005699)	Sensor [T Map]	1
	14	19317	(000000-005699)	Screw, Hex, .25-20 X 0.75, G5	1
	15	06532	(000000-005699)	Screw, Soc, M6 X 1.00 X 25, 12.9	4
	16	372534	(000000-002003)	Adapter, Intake, Throttle Body	1
	16	9006619	(002004-005699)	Adapter [E100 Mixer Gm 1.6l 2010]	1
	17	384974	(000000-005699)	Housing, Throttle, 40mm [Bosch]	1
	18	07255	(000000-005699)	Screw, Soc, M6 X 1.00 X 45, 12.9	4
	19	384992	(000000-005699)	Rail, Injector, Fuel, Plstc	1
	20	372543	(000000-005699)	Fitting, Vacuum [M16-15-6h]	1
	21	384972	(000000-005699)	Hose, Vacuum, 0.22id X 15.0l	1
	22	51839	(000000-002003)	Fitting, Brs, E90, Em10/Pm06	1
	23	1015547	(000000-002003)	Fitting, Adapter, Orifice, Pf06/Pm06	1
	24	63810	(000000-002003)	Clamp, Hose, Wormdrive, 0.56-1.06d, .56w	4
	25	57912	(000000-002003)	Hose, Heater, E90, 0.62id, 60.0 4.0	1
	26	83578	(000000-002003)	Tube, Bleed, Air, .62od 2.2l .12npt, Alm	1
	27	1015930	(000000-002003)	Fitting, Brs, Str, Pf04/Pm02	1
	28	51305	(000000-002003)	Fitting, Draincock, E90, .25npt	1
	29	43844	(000000-002003)	Clamp, Hose, Wormdrive, 0.25-0.62d, .31w	1
	30	73471	(000000-002003)	Hose, Pvc, Clr, 0.38id 0.56od 022.0l	1
	31	49266	(000000-002003)	Tie, Cable, Nyl, 07.3l .19w 1.8 Max D	1
	32	1045999	(000000-005699)	Bracket, Mtg, Cntrl, Eng	1
	33	1028711	(000000-002003)	Module, Ecu, Gas [Gm1.6l 2007]	1
	33	1056232	(002004-005699)	Module, Ecu, Gas [Gm1.6l 2010]	1
	34	06937	(000000-005699)	Screw, Pan, Phl, M5 X 0.80 X 35, 4.8	7
	35	19066	(000000-005699)	Washer, Flat, 10	4
	36	71539	(000000-005699)	Resistor, 022.00ohm, 0040watt	1
	37	06933	(000000-005699)	Screw, Pan, Phl, M5 X 0.80 X 16, 4.8	1
	38	1037346	(000000-005699)	Screw, Hex, M8 X 1.25 X 25, 9.8, Sems	2
	39	1015897	(002004-002099)	Hose, Radiator, Mold, .75id X .62id	1
	40	63810	(002004-005699)	Clamp, Hose, Wormdrive, 0.56-1.06d, .56w	2
	41	51839	(002100-005699)	Fitting, Brs, E90, Em10/Pm06	1
	42	47167	(002100-005699)	Fitting, Brs, Str, Pf06/Pm08	1
	43	1015547	(002100-005699)	Fitting, Adapter, Orifice, Pf06/Pm06	1
	44	27767	(002100-005699)	Fitting, Brs, Str, Em10/Pm06	1
	45	1062116	(002100-005699)	Fitting, Plstc, Tee, Bm10/Bm10/Bm10, Nyl	1
	46	63810	(002100-005699)	Clamp, Hose, Wormdrive, 0.56-1.06d, .56w	4
	47	1016559	(002100-005699)	Hose, Afmkt, Rbr, Heater, 0.62id, 01ft	1
	48	1016560	(002100-005699)	Hose, Afmkt, Rbr, Heater, 0.62id, 02ft	1
	49	1016556	(002100-005699)	Hose, Afmkt, Rbr, Heater, 0.62id, 03ft	1

Fig. 23 - Engine EFI Group, Gas (005700-)

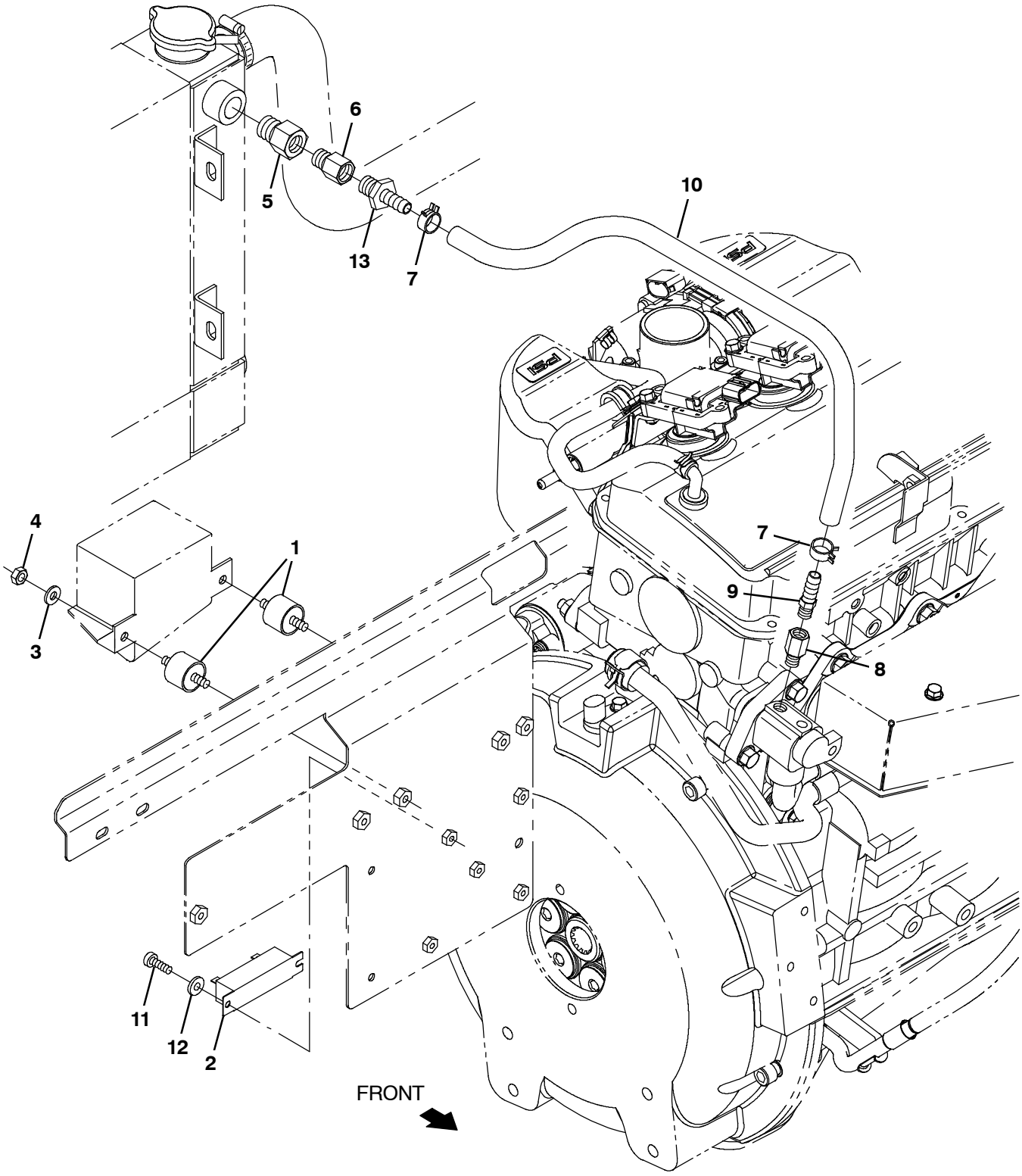

356365 - G

Fig. 23 - Engine EFI Group, Gas (005700-)

Ref.	Part No.	Serial Number	Description	Qty.
1	1013588	(005700-)	Isolator, Box, Relay	2
2	71539	(005700-)	Resistor, 022.00ohm, 0040watt	1
3	32483	(005700-)	Washer, Flat, 0.25, Sae	2
4	19312	(005700-)	Nut, Hex, Std, .25-20	2
5	1071440	(005700-)	Fitting, Brs, Str, Pf06/Pm04	1
6	1015547	(005700-)	Fitting, Adapter, Orifice, Pf06/Pm06	1
7	1072559	(005700-)	Clamp, Hose, Spring Stl, 0.58d X 0.31w	2
8	1071502	(005700-)	Fitting, Brs, Str, Pf02/Pm02 [Bspt]	1
9	1055552	(005700-)	Fitting, Brs, Str, Bm06/Pm02	1
10	1072408	(005700-)	Hose, Afmkt, Rbr, Heater, 0.38id, 03ft	1
11	06933	(005700-)	Screw, Pan, Phl, M5 X 0.80 X 16, 4.8	2
12	19066	(005700-)	Washer, Flat, 0.25b 0.56d .05, Pl, 10	2
13	36159	(005700-)	Fitting, Brs, Str, Bm06/Pm06	1

Fig. 24 - Engine EFI Group, LPG (000000-005699)

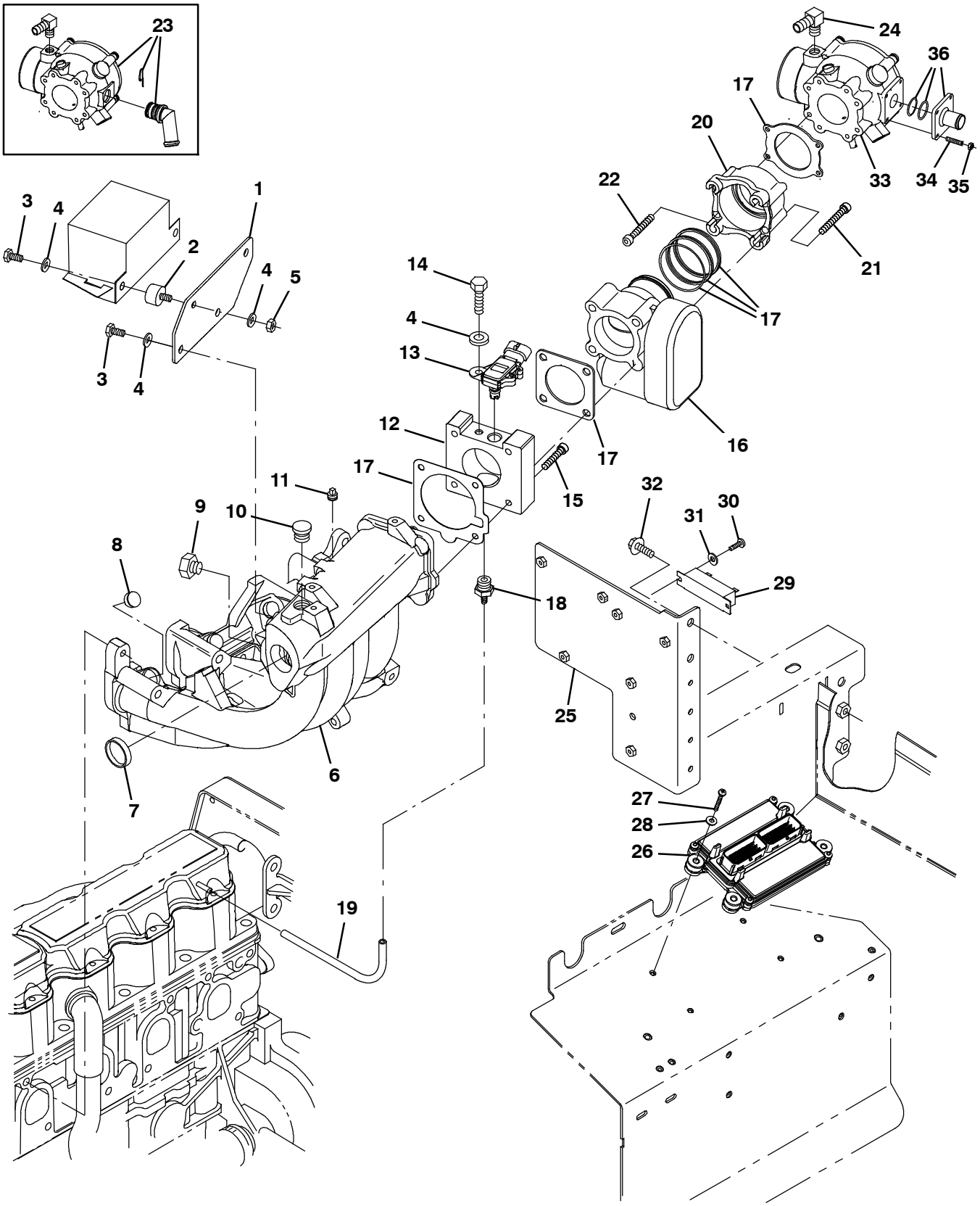

354662

Fig. 24 - Engine EFI Group, LPG (000000-005699)

Ref.	Part No.	Serial Number	Description	Qty.
1	1031312	(000000-005699)	Plate, Mtg, Relay	1
2	372470	(000000-005699)	Isolator, Box, Relay	2
3	19315	(000000-005699)	Screw, Hex, .25-20 X 0.50, G5	4
4	32490	(000000-005699)	Washer, Flat, 0.25, Std	9
5	19312	(000000-005699)	Nut, Hex, Std, .25-20	2
6	372547	(000000-005699)	Manifold, Intake [1.6l]	1
7	372549	(000000-005699)	Plug, Manifold, Intake	1
8	372579	(000000-005699)	Plug, Hole, Injector	4
9	384995	(000000-005699)	Fitting, Plug, M16, Intake Manifold	1
10	372550	(000000-005699)	Plug, Port, Sensor [Map]	1
11	372548	(000000-005699)	Plug, .12npt, Ss	1
12	372534	(000000-002003)	Adapter, Intake, Throttle Body	1
12	9006619	(002004-005699)	Adapter [E100 Mixer Gm 1.6l 2010]	1
13	384985	(000000-005699)	Sensor [T Map]	1
14	19317	(000000-005699)	Screw, Hex, .25-20 X 0.75, G5	1
15	06532	(000000-005699)	Screw, Soc, M6 X 1.00 X 25, 12.9	4
16	384974	(000000-005699)	Housing, Throttle, 40mm [Bosch]	1
17	9003391	(000000-005699)	Gasket Kit, Repair, Lpg [Gm1.6l 2007]	1
18	372543	(000000-005699)	Fitting, Vacuum [M16-15-6h]	1
19	384972	(000000-005699)	Hose, Vacuum, 0.22id X 15.0l	1
20	384996	(000000-005699)	Adapter, Valve, 400mm [Bosch]	1
21	09037	(000000-005699)	Screw, Soc, M8 X 1.25 X 70, 12.9	4
22	384991	(000000-005699)	Bolt, Soc Head, M5 X 80 X 35	4
23	384980	(000000-002003)	Mixer, W/70deg Ftg	1
24	384976	(000000-005699)	Fitting, E90	1
25	1045999	(000000-005699)	Bracket, Mtg, Cntrl, Eng	1
26	1028722	(000000-002003)	Module, Ecu, Lpg [Gm1.6l 2007]	1
26	1056233	(002004-005699)	Module, Ecu, Lpg [Gm1.6l 2010]	1
27	06937	(000000-005699)	Screw, Pan, Phl, M5 X 0.80 X 35, 4.8	7
28	19066	(000000-005699)	Washer, Flat, 10	4
29	71539	(000000-005699)	Resistor, 022.00ohm, 0040watt	1
30	06933	(000000-005699)	Screw, Pan, Phl, M5 X 0.80 X 16, 4.8	2
31	19066	(000000-005699)	Washer, Flat, 10	2
32	1037346	(000000-005699)	Screw, Hex, M8 X 1.25 X 25, 9.8, Sems	2
33	9006618	(002004-005699)	Mixer [E100lp Gm 2010]	1
34	9007424	(002004-005699)	Stud, M05-0.8 [Gm1.6l Lp 2010]	4
35	9007423	(002004-005699)	Nut, Flng, M05-0.8 [Gm1.6l Lp 2010]	4
36	1055170	(002004-005699)	Fitting, Fuel [Mixer E100lp 2010]	1

Fig. 25 - Engine EFI Group, LPG (005700-)

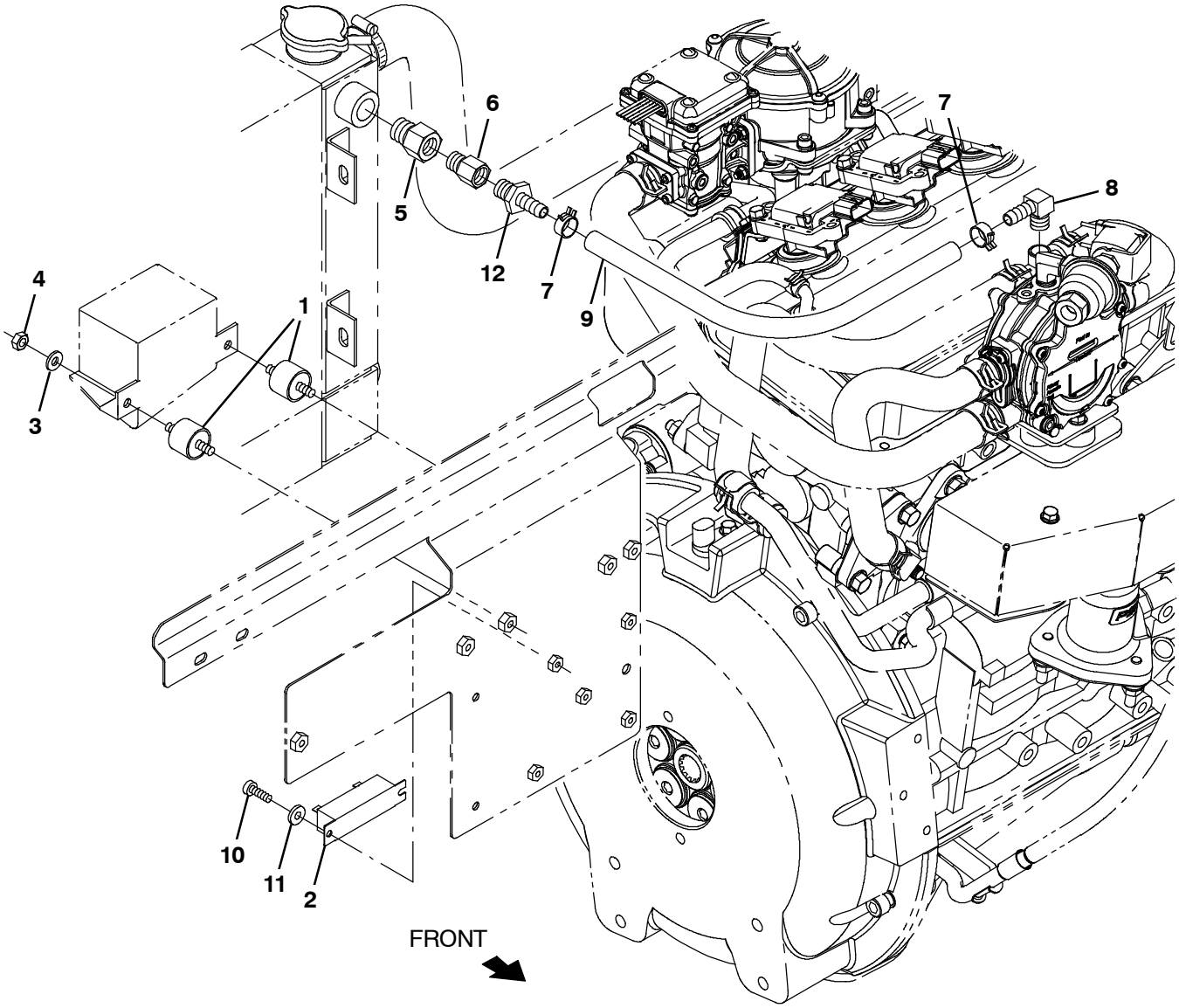

356366 - LP

Fig. 25 - Engine EFI Group, LPG (005700-)

Ref.	Part No.	Serial Number	Description	Qty.
1	1013588	(005700-)	Isolator, Box, Relay	2
2	71539	(005700-)	Resistor, 022.00ohm, 0040watt	1
3	32483	(005700-)	Washer, Flat, 0.25, Sae	2
4	19312	(005700-)	Nut, Hex, Std, .25-20	2
5	1071440	(005700-)	Fitting, Brs, Str, Pf06/Pm04	1
6	1015547	(005700-)	Fitting, Adapter, Orifice, Pf06/Pm06	1
7	1072559	(005700-)	Clamp, Hose, Spring Stl, 0.58d X 0.31w	2
8	1015815	(005700-)	Fitting, Brs, E90, Bm06/Pm04	1
9	1072408	(005700-)	Hose, Afmkt, Rbr, Heater, 0.38id, 03ft	1
10	06933	(005700-)	Screw, Pan, Phl, M5 X 0.80 X 16, 4.8	2
11	19066	(005700-)	Washer, Flat, 0.25b 0.56d .05, Pl, 10	2
12	36159	(005700-)	Fitting, Brs, Str, Bm06/Pm06	1

Fig. 26 - Engine Vaporizer Group, LPG (000000-002099)

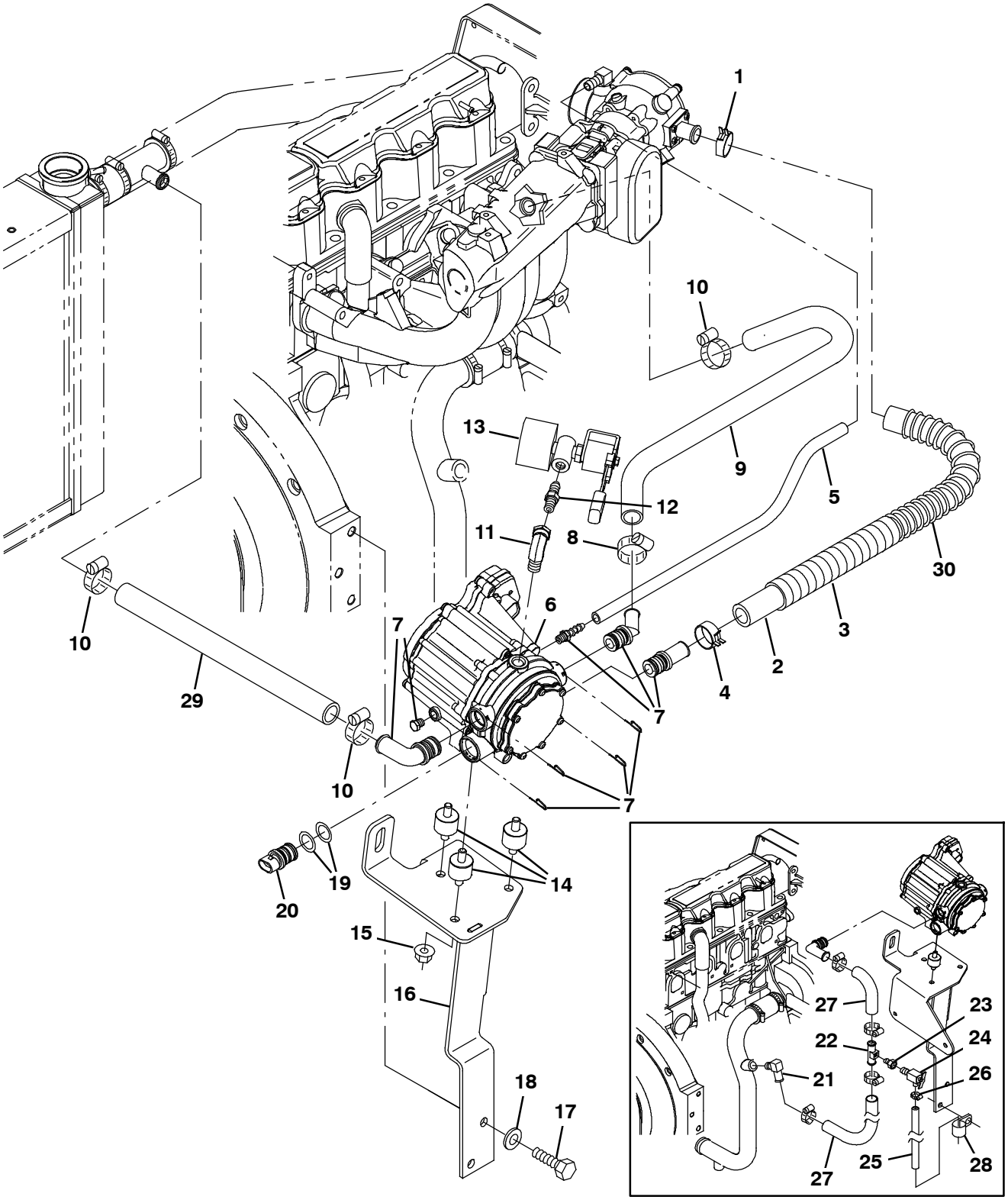

354663

Fig. 26 - Engine Vaporizer Group, LPG (000000-002099)

	Ref.	Part No.	Serial Number	Description	Qty.
	1	384970	(000000-002099)	Clamp, Hose, Spring, 0.75d	1
	2	384983	(000000-002003)	Hose [Mixer To Epr]	1
	2	9007552	(002004-002099)	Hose, Fuel [Mixer To Epr, 22.5”L]	1
	3	384971	(000000-002099)	Cover, Hose	1
	4	384979	(000000-002099)	Clamp, Hose, Spring, 0.62d	1
	5	384973	(000000-002099)	Hose, Supply, Gas, .25id	1
	6	384977	(000000-002099)	Regulator [Ep]	1
	7	384978	(000000-002099)	Fitting Kit [Epr]	1
	8	372539	(000000-002099)	Clamp, Hose, 1.0	1
	9	384984	(000000-002099)	Hose [Epr To Manifold]	1
	10	63810	(000000-002099)	Clamp, Hose, Wormdrive, 0.56-1.06d, .56w	5
	11	11442-1	(000000-002099)	Fitting, Hyd, E90, Spcl	1
	12	372529	(000000-002099)	Fitting, Nipple, .25mal	1
▽	13	384975	(000000-002003)	Valve, Lock Off	1
▲		372615	(000000-002003)	Filter Kit, Fuelock, Lpg	1
▽	13	9006620	(002004-002099)	Valve, Lock Off [Gm 1.6l 2010]	1
▲		9007380	(002004-002099)	Filter Kit, Fuelock,Lpg[Gm1.6l 2010]	1
	14	384986	(000000-002099)	Isolator [Epr]	3
	15	07791	(000000-002099)	Nut, Hex, Flng, M8 X 1.25	3
	16	1028343	(000000-002003)	Bracket Wldt, Mtg, Regulator, Lpg	1
	16	1056300	(002004-002099)	Bracket Wldt, Mtg, Reg, Lpg[Gm 2010]	1
	17	371770	(000000-002099)	Screw	2
	18	371877	(000000-002099)	Washer, Flat, 0.38, Hardened	2
	19	1041151	(000000-002099)	Seal, Org, Sensor, Temp [Epr]	2
	20	1041152	(000000-002099)	Sensor, Temp [Epr]	1
	21	51839	(000000-002003)	Fitting, Brs, E90, Em10/Pm06	1
	22	83578	(000000-002003)	Tube, Bleed, Air, .62od 2.2l .12npt, Alm	1
	23	1015930	(000000-002003)	Fitting, Brs, Str, Pf04/Pm02	1
	24	51305	(000000-002003)	Fitting, Draincock, E90, .25npt	1
	25	73471	(000000-002003)	Hose, Pvc, Clr, 0.38id 0.56od 022.0l	1
	26	43844	(000000-002003)	Clamp, Hose, Wormdrive, 0.25-0.62d, .31w	1
	27	372528	(000000-002003)	Hose, Mold, .62 To .75	1
	28	69234	(000000-002003)	Clamp, Cable, Stl, 1.00d X 0.75w, 1hole	1
	29	72979	(002004-002099)	Hose, Heater, 0.62id, 020.0l	1
	30	9007553	(002004-002099)	Spring, 3/4 X 16 [Gm1.6l 2010 Lpg]	1

Fig. 27 - Engine Vaporizer Group, LPG (002100-005699)

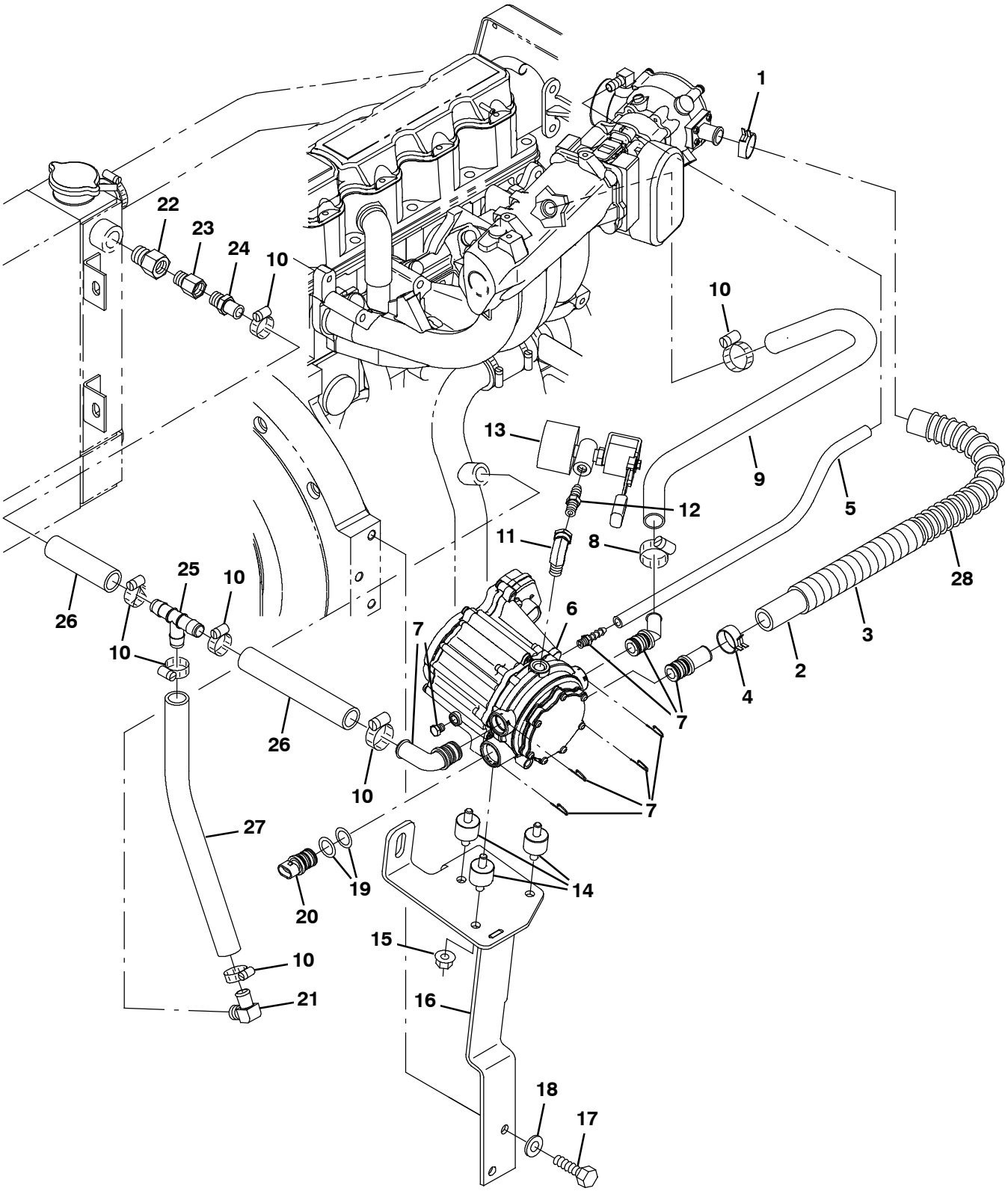

354663

Fig. 27 - Engine Vaporizer Group, LPG (002100-005699)

	Ref.	Part No.	Serial Number	Description	Qty.
	1	384970	(002100-005699)	Clamp, Hose, Spring, 0.75d	1
	2	9007552	(002100-005699)	Hose, Fuel [Mixer To Epr, 22.5”L]	1
	3	384971	(002100-005699)	Cover, Hose	1
	4	384979	(002100-005699)	Clamp, Hose, Spring, 0.62d	1
	5	384973	(002100-005699)	Hose, Supply, Gas, .25id	1
	6	384977	(002100-005699)	Regulator [Ep]	1
	7	384978	(002100-005699)	Fitting Kit [Epr]	1
	8	372539	(002100-005699)	Clamp, Hose, 1.0	1
	9	384984	(002100-005699)	Hose [Epr To Manifold]	1
	10	63810	(002100-005699)	Clamp, Hose, Wormdrive, 0.56-1.06d, .56w	9
	11	11442-1	(002100-005699)	Fitting, Hyd, E90, Spcl	1
	12	372529	(002100-005699)	Fitting, Nipple, .25mal	1
▽	13	9006620	(002100-005699)	Valve, Lock Off [Gm 1.6l 2010]	1
▲		9007380	(002100-005699)	Filter Kit, Fuelock,Lpg[Gm1.6l 2010]	1
	14	384986	(002100-005699)	Isolator [Epr]	3
	15	07791	(002100-005699)	Nut, Hex, Flng, M8 X 1.25	3
	16	1056300	(002100-005699)	Bracket Wldt, Mtg, Reg, Lpg[Gm 2010]	1
	17	371770	(002100-005699)	Screw	2
	18	371877	(002100-005699)	Washer, Flat, 0.38, Hardened	2
	19	1041151	(002100-005699)	Seal, Org, Sensor, Temp [Epr]	2
	20	1041152	(002100-005699)	Sensor, Temp [Epr]	1
	21	51839	(002100-005699)	Fitting, Brs, E90, Em10/Pm06	1
	22	47167	(002100-005699)	Fitting, Brs, Str, Pf06/Pm08	1
	23	1015547	(002100-005699)	Fitting, Adapter, Orifice, Pf06/Pm06	1
	24	27767	(002100-005699)	Fitting, Brs, Str, Em10/Pm06	1
	25	1062116	(002100-005699)	Fitting, Plstc, Tee, Bm10/Bm10/Bm10, Nyl	1
	26	1016559	(002100-005699)	Hose, Afmkt, Rbr, Heater, 0.62id, 01ft	2
	27	1016560	(002100-005699)	Hose, Afmkt, Rbr, Heater, 0.62id, 02ft	1
	28	9007553	(002100-005699)	Spring, 3/4 X 16 [Gm1.6l 2010 Lpg]	1

Fig. 28 - Engine Air Cleaner Group, Gas (000000-005699)

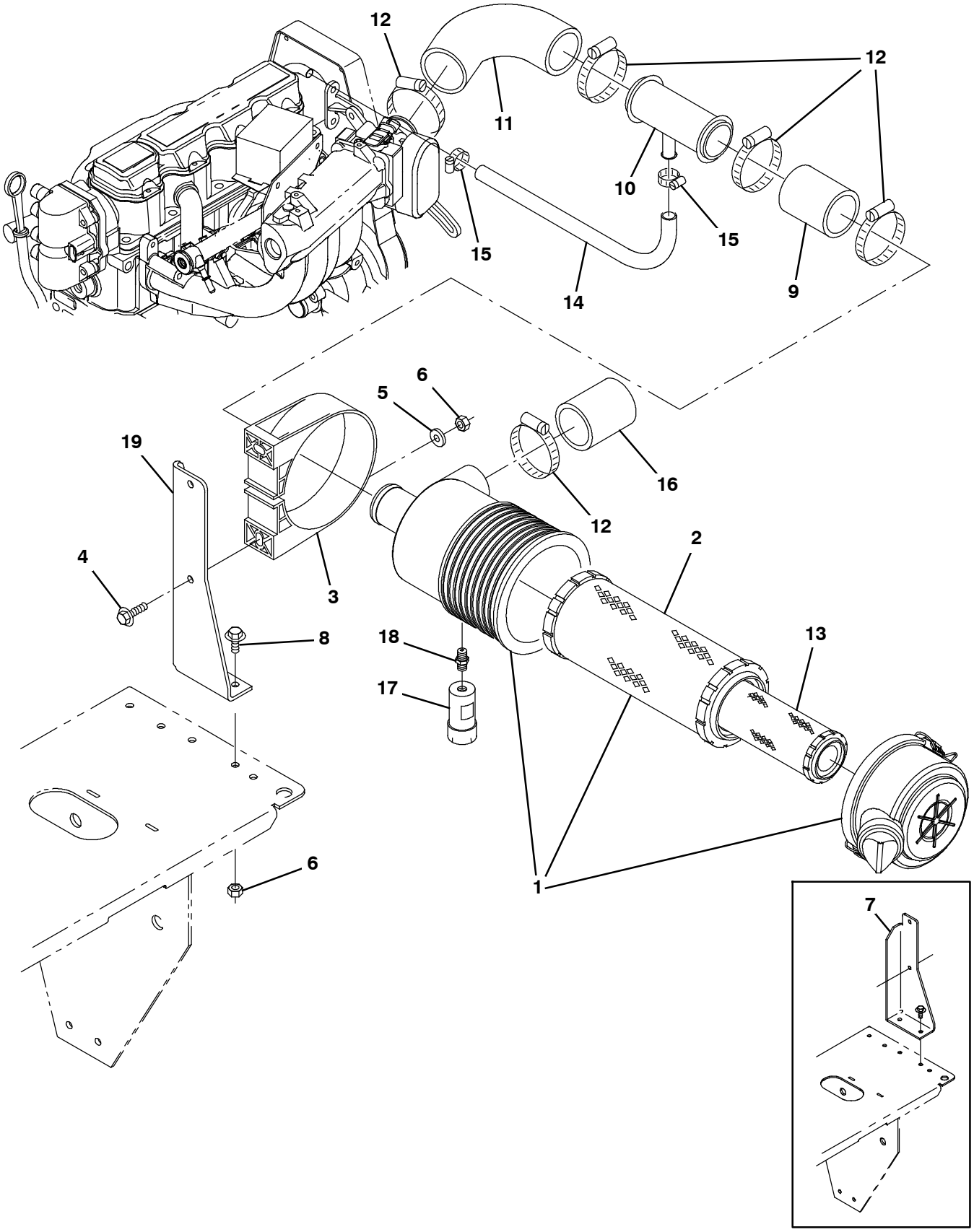

354666

Fig. 28 - Engine Air Cleaner Group, Gas (000000-005699)

	Ref.	Part No.	Serial Number	Description	Qty.
▽	1	1032119	(000000-005699)	Filter, Air, 2.0 Inlet, Str	1
▲	2	369746	(000000-005699)	Element, Fltr, Air [Dn]	1
	3	369747	(000000-005699)	Clamp, Mtg, Fltr, Air	1
	4	1037355	(000000-005699)	Screw, Hex, M8 X 1.25 X 35, 9.8, Sems	2
	5	32491	(000000-005699)	Washer, Flat, 0.31, Std	2
	6	08709	(000000-005699)	Nut, Hex, Lock, M8 X 1.25, Nl	4
	7	1043751	(000000-002099)	Bracket, Mtg, Air-Clnr	1
	8	1037346	(000000-005699)	Screw, Hex, M8 X 1.25 X 25, 9.8, Sems	2
	9	15543	(000000-005699)	Hose, Rbr, 2.00Id 2.50Od 03.0L	1
	10	1011780	(000000-005699)	Tube Wldt, Tee	1
	11	76825	(000000-005699)	Hose, Rbr, E90, 2.00id 2.00id 03.5 03.5	1
	12	14432	(000000-005699)	Clamp, Hose, Wormdrive, 1.81-2.75d, .50w	4
	13	398279	(000000-005699)	Element, Fltr, Air, Safety	1
	14	1016556	(000000-005699)	Hose, Afmkt, Rbr, Heater, 0.62id, 03ft	1
	15	63810	(000000-005699)	Clamp, Hose, Wormdrive, 0.56-1.06d, .56w	2
	16	1038209	(000000-005699)	Hose, Rbr, 2.00id 2.50od 02.5l	1
	17	03026	(000000-005699)	Indicator, Service, Fltr, Air [20h20 Dn]	1
	18	51560-5	(000000-005699)	Fitting, Brs, Str, Pm02, Service	1
	19	1057890	(002100-005699)	Bracket, Mtg, Air-Clnr	1

Fig. 29 - Engine Air Cleaner Group, Gas (005700-)

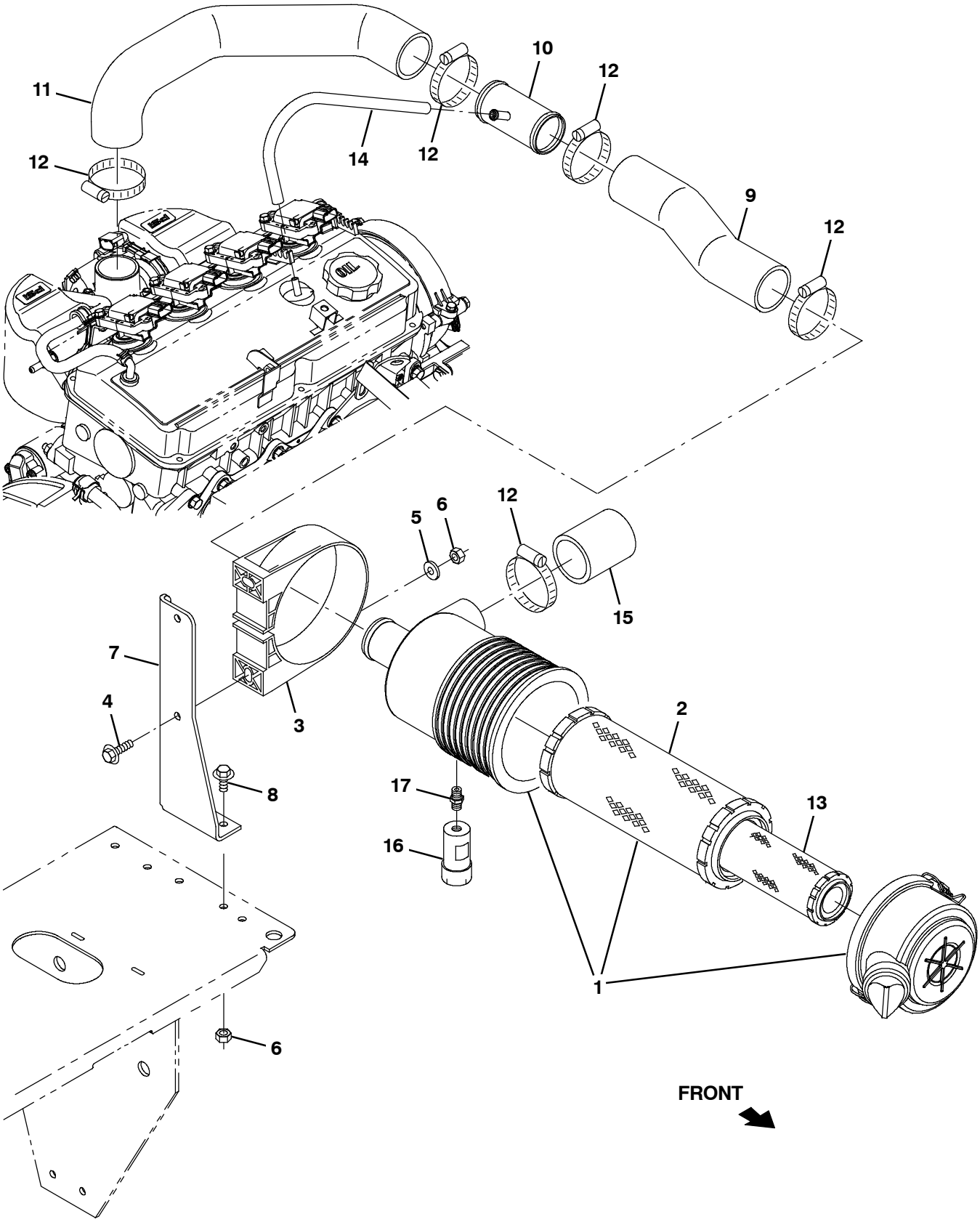

356367 - G

Fig. 29 - Engine Air Cleaner Group, Gas (005700-)

	Ref.	Part No.	Serial Number	Description	Qty.
▽	1	1032119	(005700-)	Filter, Air, 2.0 Inlet, Str	1
▲	2	369746	(005700-)	Element, Fltr, Air [Dn]	1
	3	369747	(005700-)	Clamp, Mtg, Fltr, Air	1
	4	1037355	(005700-)	Screw, Hex, M8 X 1.25 X 35, 9.8, Sems	2
	5	32491	(005700-)	Washer, Flat, 0.31, Std	2
	6	08709	(005700-)	Nut, Hex, Lock, M8 X 1.25, Nl	4
	7	1057890	(005700-)	Bracket, Mtg, Air-Clnr	1
	8	1037346	(005700-)	Screw, Hex, M8 X 1.25 X 25, 9.8, Sems	2
	9	1070920	(005700-)	Hose, Rbr, E90, 2.00id [Edpm Mit 2013]	1
	10	1070833	(005700-)	Tube Wldt, Tee [Mit 2013]	1
	11	1071599	(005700-)	Hose, Intake, Mold, Gas [Epdm Mit2013]	1
	12	14432	(005700-)	Clamp, Hose, Wormdrive, 1.81-2.75d, .50w	4
	13	398279	(005700-)	Element, Fltr, Air, Safety	1
	14	381391	(005700-)	Hose, Drain,Overflow,Radiator[1pick=1ft]	1
	15	1038209	(005700-)	Hose, Rbr, 2.00id 2.50od 02.5l	1
	16	03026	(005700-)	Indicator, Service, Fltr, Air [20h20 Dn]	1
	17	51560-5	(005700-)	Fitting, Brs, Str, Pm02, Service	1

Fig. 30 - Engine Air Cleaner Group, LPG (000000-005699)

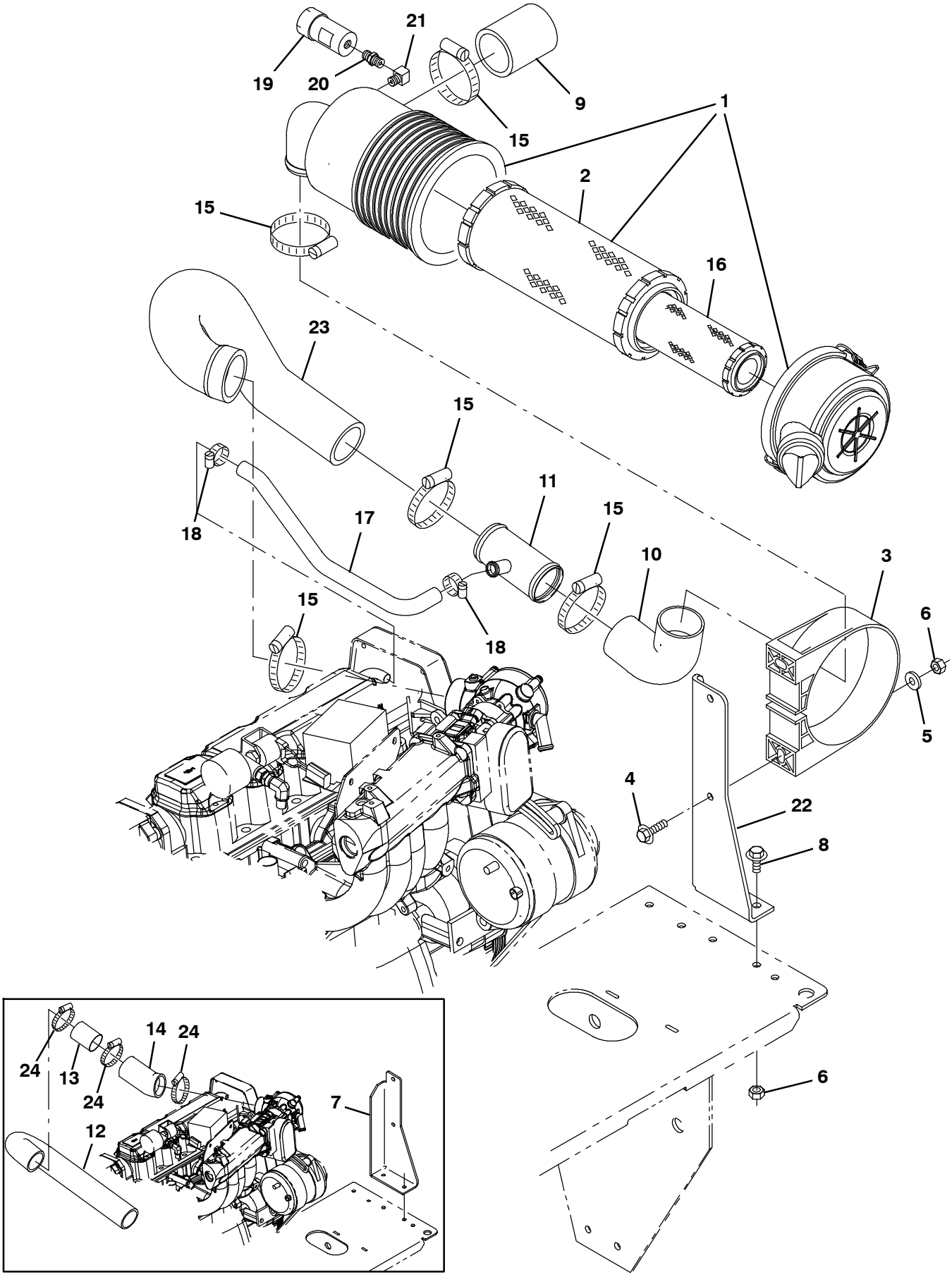

354667

Fig. 30- Engine Air Cleaner Group, LPG (000000-005699)

	Ref.	Part No.	Serial Number	Description	Qty.
▽	1	369745	(000000-005699)	Filter Assy, Air	1
▲	2	369746	(000000-005699)	Element, Fltr, Air [Dn]	1
	3	369747	(000000-005699)	Clamp, Mtg, Fltr, Air	1
	4	1037355	(000000-005699)	Screw, Hex, M8 X 1.25 X 35, 9.8, Sems	2
	5	32491	(000000-005699)	Washer, Flat, 0.31, Std	2
	6	08709	(000000-005699)	Nut, Hex, Lock, M8 X 1.25, Nl	4
	7	1043751	(000000-002099)	Bracket, Mtg, Air-Clnr	1
	8	1037346	(000000-005699)	Screw, Hex, M8 X 1.25 X 25, 9.8, Sems	2
	9	1038209	(000000-005699)	Hose, Rbr, 2.00id 2.50od 02.5l	1
	10	76825	(000000-005699)	Hose, Rbr, E90, 2.00id 2.00id 03.5 03.5	1
	11	1011780	(000000-005699)	Tube Wldt, Tee	1
	12	1044565	(000000-002099)	Hose, Intake Mold, 2.00Id 2.00Id [EPDM]	1
	13	79536	(000000-002099)	Tube, 1.88id 2.00od 02.5l, Ss	1
	14	1035152	(000000-002003)	Hose, Intake, Mold	1
	14	1054565	(002004-002099)	Hose, Intake, Mold, 2.0id, Lpg [Gm 10]	1
	15	14432	(000000-005699)	Clamp, Hose, Wormdrive, 1.81-2.75d, .50w	5
	16	398279	(000000-005699)	Element, Fltr, Air, Safety	1
	17	1016556	(000000-005699)	Hose, Afmkt, Rbr, Heater, 0.62id, 03ft	1
	18	63810	(000000-005699)	Clamp, Hose, Wormdrive, 0.56-1.06d, .56w	2
	19	03026	(000000-005699)	Indicator, Service, Fltr, Air [20h20 Dn]	1
	20	51560-5	(000000-005699)	Fitting, Brs, Str, Pm02, Service	1
	21	11984	(000000-005699)	Fitting, Pipe, E90, Pf02/Pm02	1
	22	1057890	(002100-005699)	Bracket, Mtg, Air-Clnr	1
	23	1060207	(002100-005699)	Hose, Intake, Mold, 2.0id, Lpg [Gm 2010]	1
	24	14432	(000000-002099)	Clamp, Hose, Wormdrive, 1.81-2.75d, .50w	3

Fig. 31 - Engine Air Cleaner Group, LPG (005700-)

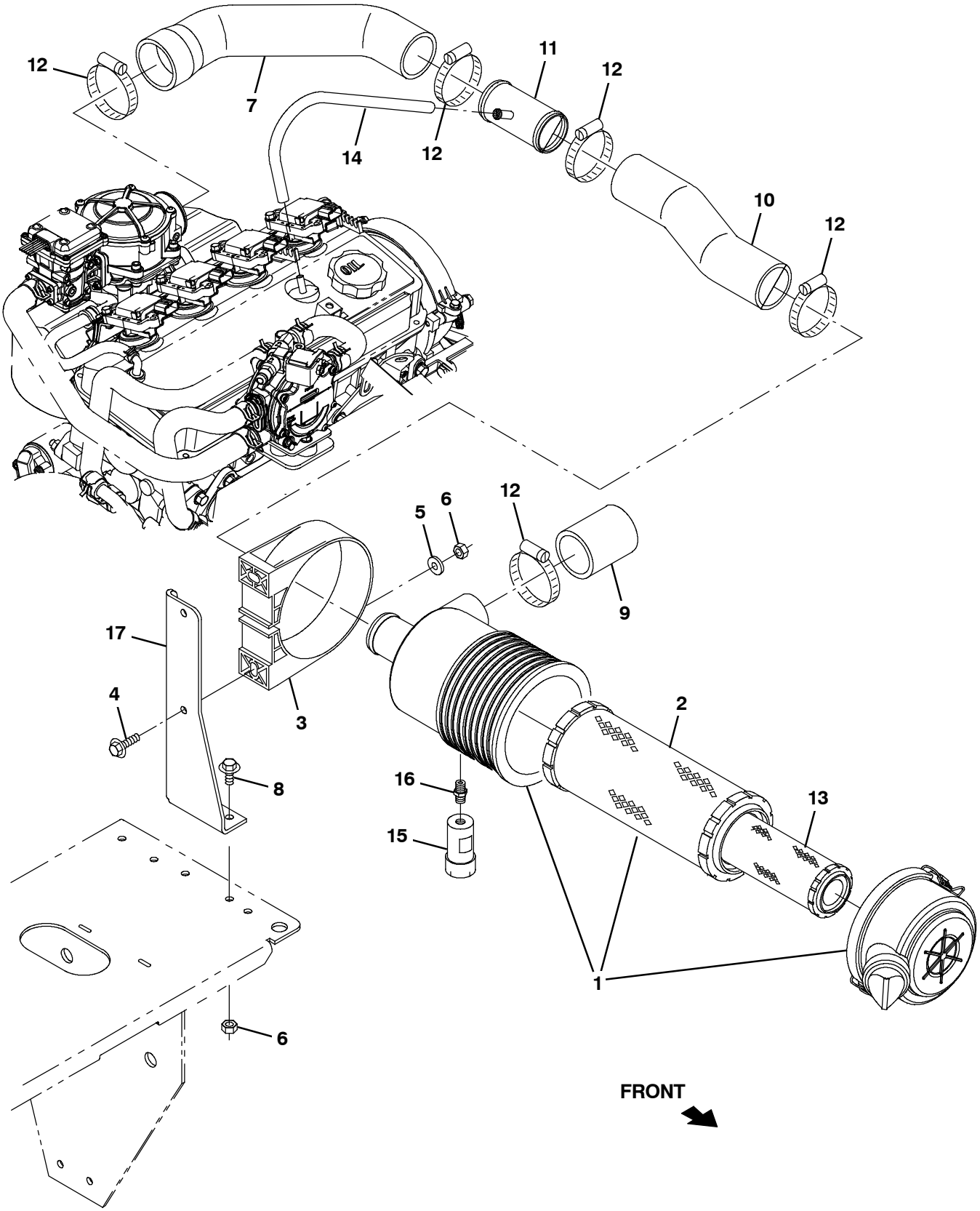

356368 - LP

Fig. 31 - Engine Air Cleaner Group, LPG (005700-)

	Ref.	Part No.	Serial Number	Description	Qty.
▽	1	1032119	(005700-)	Filter, Air, 2.0 Inlet, Str	1
▲	2	369746	(005700-)	Element, Fltr, Air [Dn]	1
	3	369747	(005700-)	Clamp, Mtg, Fltr, Air	1
	4	1037355	(005700-)	Screw, Hex, M8 X 1.25 X 35, 9.8, Sems	2
	5	32491	(005700-)	Washer, Flat, 0.31, Std	2
	6	08709	(005700-)	Nut, Hex, Lock, M8 X 1.25, Nl	4
	7	1070926	(005700-)	Hose, Intake, Mold [Epdm Mit2013]	1
	8	1037346	(005700-)	Screw, Hex, M8 X 1.25 X 25, 9.8, Sems	2
	9	1038209	(005700-)	Hose, Rbr, 2.00id 2.50od 02.5l	1
	10	1070920	(005700-)	Hose, Rbr, E90, 2.00id [Edpm Mit 2013]	1
	11	1070833	(005700-)	Tube Wldt, Tee [Mit 2013]	1
	12	14432	(005700-)	Clamp, Hose, Wormdrive, 1.81-2.75d, .50w	4
	13	398279	(005700-)	Element, Fltr, Air, Safety	1
	14	381391	(005700-)	Hose, Drain,Overflow,Radiator[1pick=1ft]	1
	15	03026	(005700-)	Indicator, Service, Fltr, Air [20h20 Dn]	1
	16	51560-5	(005700-)	Fitting, Brs, Str, Pm02, Service	1
	17	1057890	(005700-)	Bracket, Mtg, Air-Clnr	1

Fig. 32 - Engine Alternator and Battery Group (000000-005699)

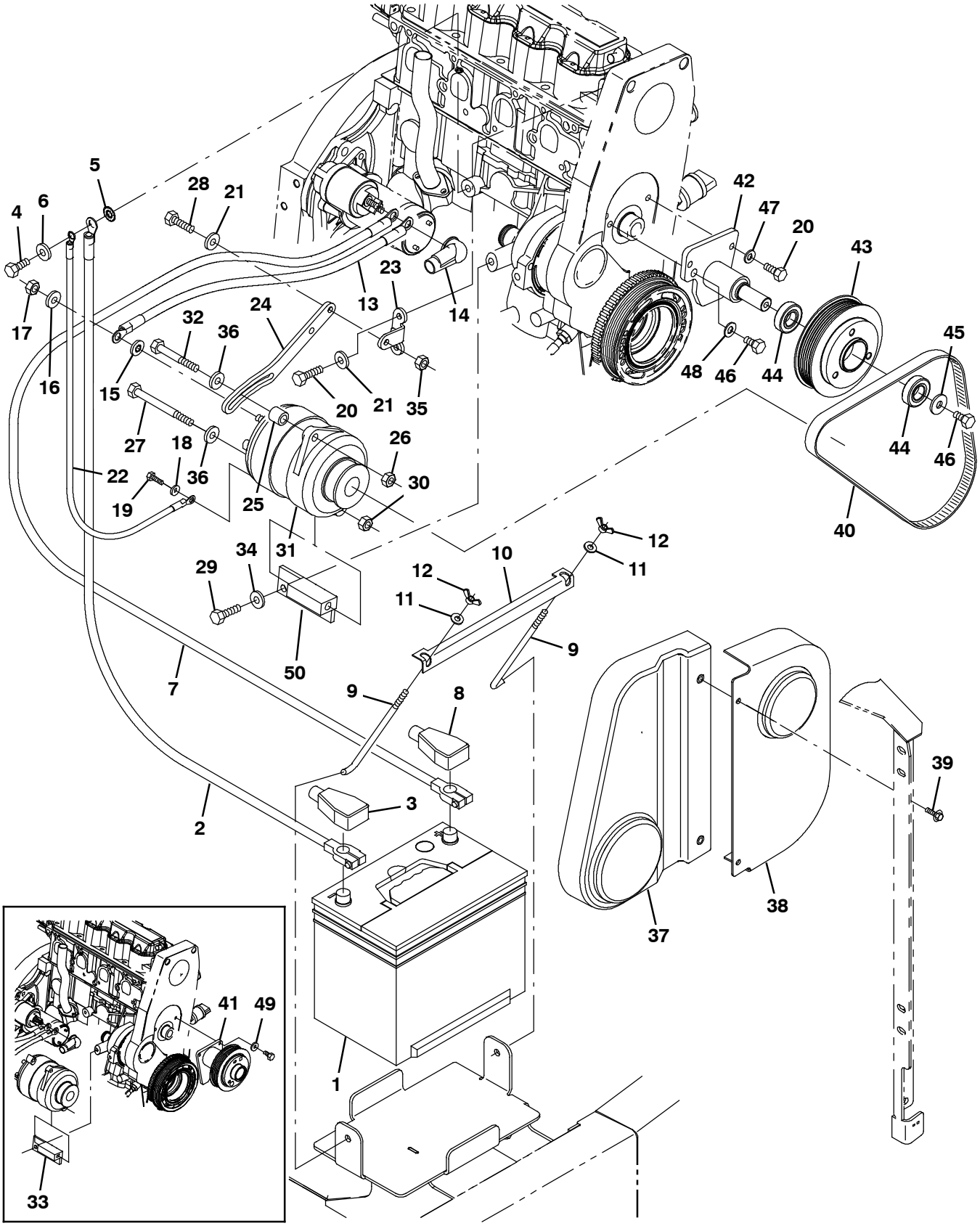

354671

Fig. 32 - Engine Alternator and Battery Group (000000-005699)

Ref.	Part No.	Serial Number	Description	Qty.
1	10137	(000000-005699)	Battery, Wet, 12vdc 0475cca	1
2	34821	(000000-005699)	Cable, Battery, 02ga 36.0l Blk .38ring	1
3	68872	(000000-005699)	Boot, Terminal, Battery, 02-01ga, Blk	1
4	03192	(000000-005699)	Screw, Hex, M10 X 1.50 X 30, 8.8	1
5	41142	(000000-005699)	Washer, Lock, Int-Ext, 0.38	1
6	32492	(000000-005699)	Washer, Flat, 0.38, Std	1
7	34823	(000000-005699)	Cable, Battery, 02ga 33.0l Red .38ring	1
8	68873	(000000-005699)	Boot, Terminal, Battery, 02-01ga, Red	1
9	13015	(000000-005699)	Bolt, Hold-Down, Battery 08.5l	2
10	72977	(000000-005699)	Bracket, Angle, Hold-Down, Battery	1
11	01685	(000000-005699)	Washer, Flat, 0.38b 0.88d .08, Ss	2
12	39272	(000000-005699)	Nut, Wing, .31-18	2
13	1029689	(000000-005699)	Cable, 06ga 16.0l Red .38ring /.38ring	1
14	1016314	(000000-005699)	Boot, 90deg .50id 1.00id 2.50l, Red	1
15	32984	(000000-005699)	Washer, Lock, Int, 0.31	1
16	39349	(000000-005699)	Washer, Flat, 0.31, Sae	1
17	41361	(000000-005699)	Nut, Hex, Std, M8 X 1.25, Brs	1
18	41139	(000000-005699)	Washer, Lock, Int-Ext, 10	1
19	42011	(000000-005699)	Screw, Hex, 10-24 X 0.50, Ss	1
20	16931	(000000-005699)	Screw, Hex, M8 X 1.25 X 20, 8.8	4
21	371865	(000000-005699)	Washer, Flat, 0.31, Hardened	3
22	371527	(000000-005699)	Wire, Ground	1
23	371871	(000000-005699)	Bracket, Anchor, Strap, Alternator	1
24	371872	(000000-005699)	Strap, Adj, Alternator	1
25	372557	(000000-005699)	Spacer, Strap, Adj, Alternator	1
26	39311	(000000-005699)	Nut, Hex, Std, M8 X 1.25	1
27	39785	(000000-005699)	Screw, Hex, .31-18 X 4.50, G5	1
28	76958	(000000-005699)	Screw, Hex, .31-18 X 1.75, G5	1
29	06961	(000000-005699)	Screw, Hex, M10 X 1.50 X 20, 8.8	2
30	32983	(000000-005699)	Nut, Hex, Lock, .31-18, Nl	1
31	393209	(000000-005699)	Alternator, 12vdc 075a [Multi Grv]	1
32	363976	(000000-005699)	Screw, Hex, M8 X 1.25 X 60, 8.8, Fl	1
33	9006917	(000000-002003)	Bracket Kit, Alternator, Repair	1
34	32485	(000000-005699)	Washer, Flat, 0.38, Sae	1
35	19313	(000000-005699)	Nut, Hex, Std, .31-18	1
36	39349	(000000-005699)	Washer, Flat, 0.31, Sae	2
37	9004520	(000000-005699)	Guard, Belt, Gas/Lp, W/ Label, Replmt	1
38	9004521	(000000-005699)	Guard, Belt, Gas/Lp, W/ Label, Replmt	1
39	1036892	(000000-005699)	Screw, Hex, M6 X 1.00 X 25, 9.8 Sems	2
40	1033644	(000000-005699)	Belt, Ribbed, 38.5l	1
41	9007088	(000000-002003)	Sheave Assy Kit, Repair	1
42	1055381	(002004-005699)	Plate Wldt, Fan, Hub [Gm 1.6l]	1
43	1055425	(002004-005699)	Sheave, Mach [Gm1.6l]	1
44	1055377	(002004-005699)	Bearing, Ball, 20mm B 42mm D 12mm W	2
45	1014563	(002004-005699)	Washer, Flat, 0.40b 1.12d .12, Ss	1
46	21195	(002004-005699)	Screw, Hex, .38-16 X 0.75, G5	1
47	39349	(002004-005699)	Washer, Flat, 0.31, Sae	2
48	32485	(002004-005699)	Washer, Flat, 0.38, Sae	1
49	371865	(000000-002003)	Washer, Flat, 0.31, Hardened	2
50	1008640	(002004-005699)	Bracket Wldt, Alternator, Lower [Gm1.6l]	1

Fig. 33 - Engine Alternator Group (005700-)

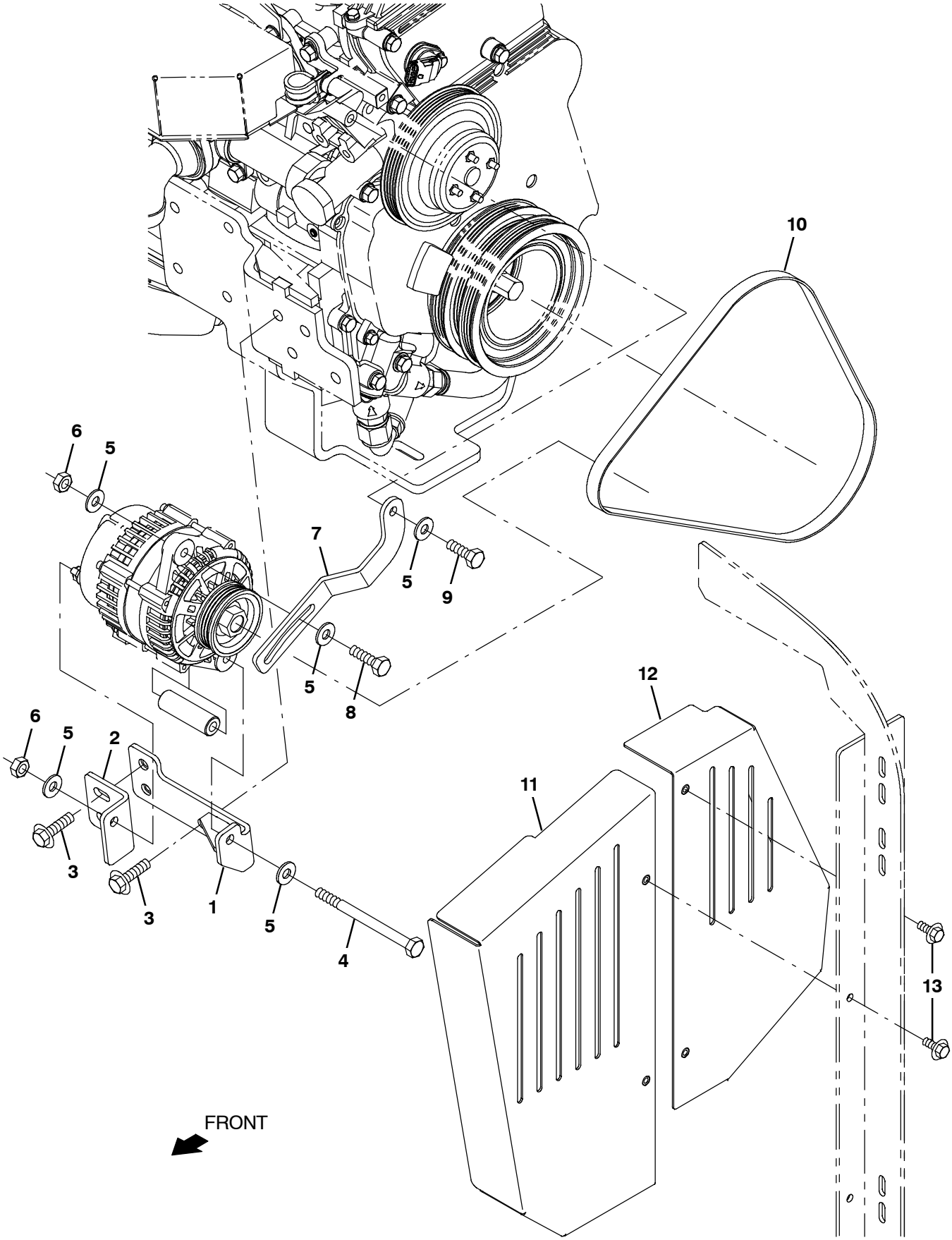

356369 - G, LP

Fig. 33 - Engine Alternator Group (005700-)

Ref.	Part No.	Serial Number	Description	Qty.
1	1071138	(005700-)	Bracket Wldt, Alternator [S30 Mit2013]	1
2	1071136	(005700-)	Bracket, Mtg, Alternator [S30 Mit 2013]	1
3	1037346	(005700-)	Screw, Hex, M8 X 1.25 X 25, 9.8, Sems	4
4	49883	(005700-)	Screw, Hex, M8 X 1.25 X 120, 8.8, Fl	1
5	32491	(005700-)	Washer, Flat, 0.31, Std	5
6	08709	(005700-)	Nut, Hex, Lock, M8 X 1.25, Nl	2
7	1071186	(005700-)	Arm, Alternator, Adj [Mit 2013]	1
8	06955	(005700-)	Screw, Hex, M8 X 1.25 X 35, 8.8	1
9	16931	(005700-)	Screw, Hex, M8 X 1.25 X 20, 8.8	1
10	1071680	(005700-)	Belt, Ribbed, Alternator, 40.25l	1
11	9010202	(005700-)	Guard, Belt, Lh, G/Lpg, W/ Label, Replmt	1
12	9010203	(005700-)	Guard, Belt, Rh, G/Lpg, W/ Label, Replmt	1
13	1036892	(005700-)	Screw, Hex, M6 X 1.00 X 25, 9.8, Sems	4

Fig. 34 - Engine Battery Group (005700-)

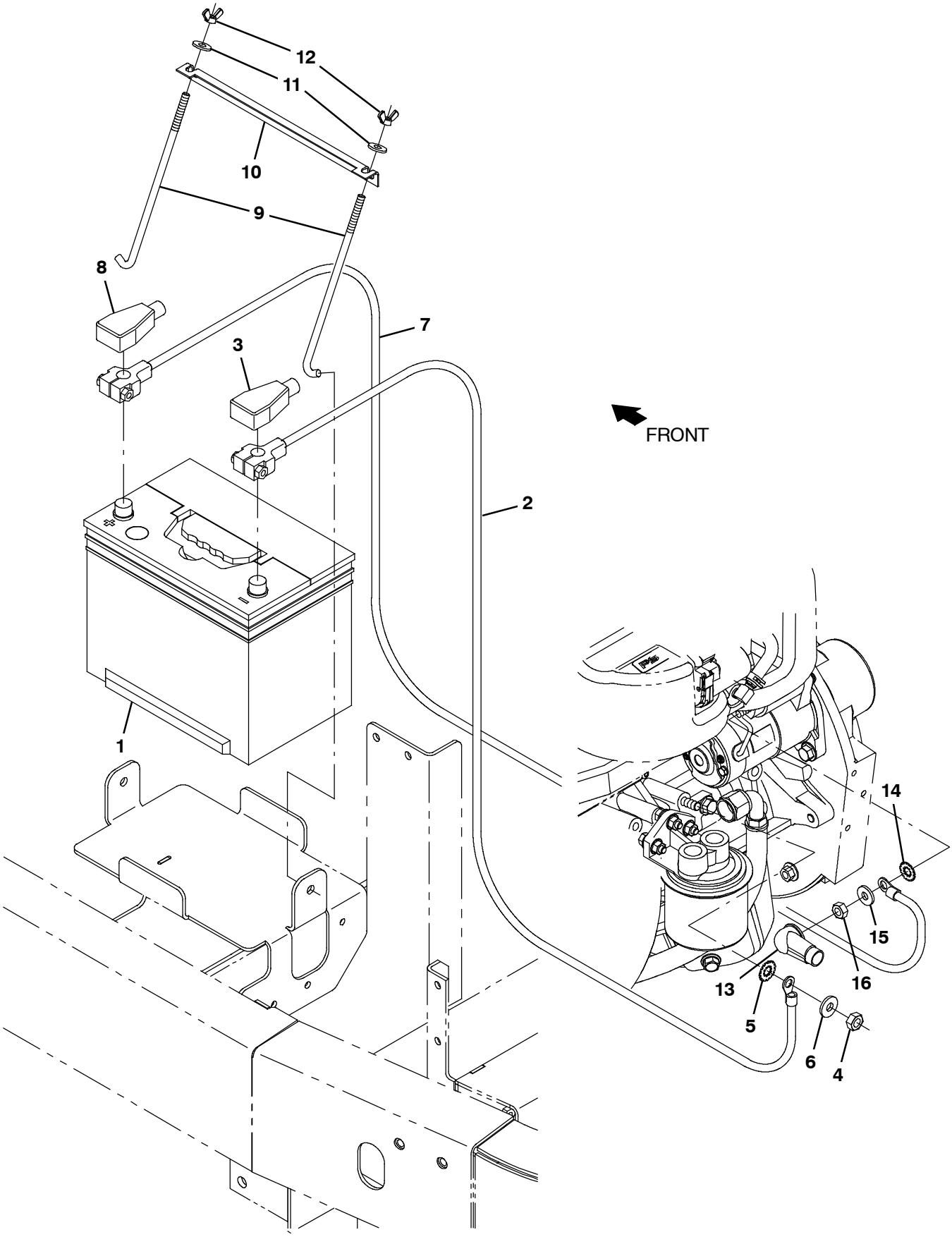

356370 - G, LP

Fig. 34 - Engine Battery Group (005700-)

Ref.	Part No.	Serial Number	Description	Qty.
1	10137	(005700-)	Battery, Wet, 12vdc 0475cca	1
2	1071854	(005700-)	Cable, Battery, 2ga, 70l, Black	1
3	68872	(005700-)	Boot, Terminal, Battery, 02-01ga, Blk	1
4	66185	(005700-)	Nut, Hex, Std, M10 X 1.25	1
5	41142	(005700-)	Washer, Lock, Int-Ext, 0.38	1
6	32492	(005700-)	Washer, Flat, 0.38, Std	1
7	1071855	(005700-)	Cable, Battery, 2ga, 70l, Red	1
8	68873	(005700-)	Boot, Terminal, Battery, 02-01ga, Red	1
9	13015	(005700-)	Bolt, Hold-Down, Battery 08.5l	2
10	72977	(005700-)	Bracket, Angle, Hold-Down, Battery	1
11	01685	(005700-)	Washer, Flat, 0.38b 0.88d .08, Ss	2
12	39272	(005700-)	Nut, Wing, .31-18	2
13	1016314	(005700-)	Boot, 90deg .50id 1.00id 2.50l, Red	1
14	32984	(005700-)	Washer, Lock, Int, 0.31	1
15	39349	(005700-)	Washer, Flat, 0.31, Sae	1
16	41361	(005700-)	Nut, Hex, Std, M8 X 1.25, Brs	1

Fig. 35 - Engine Muffler Group (000000-005699)

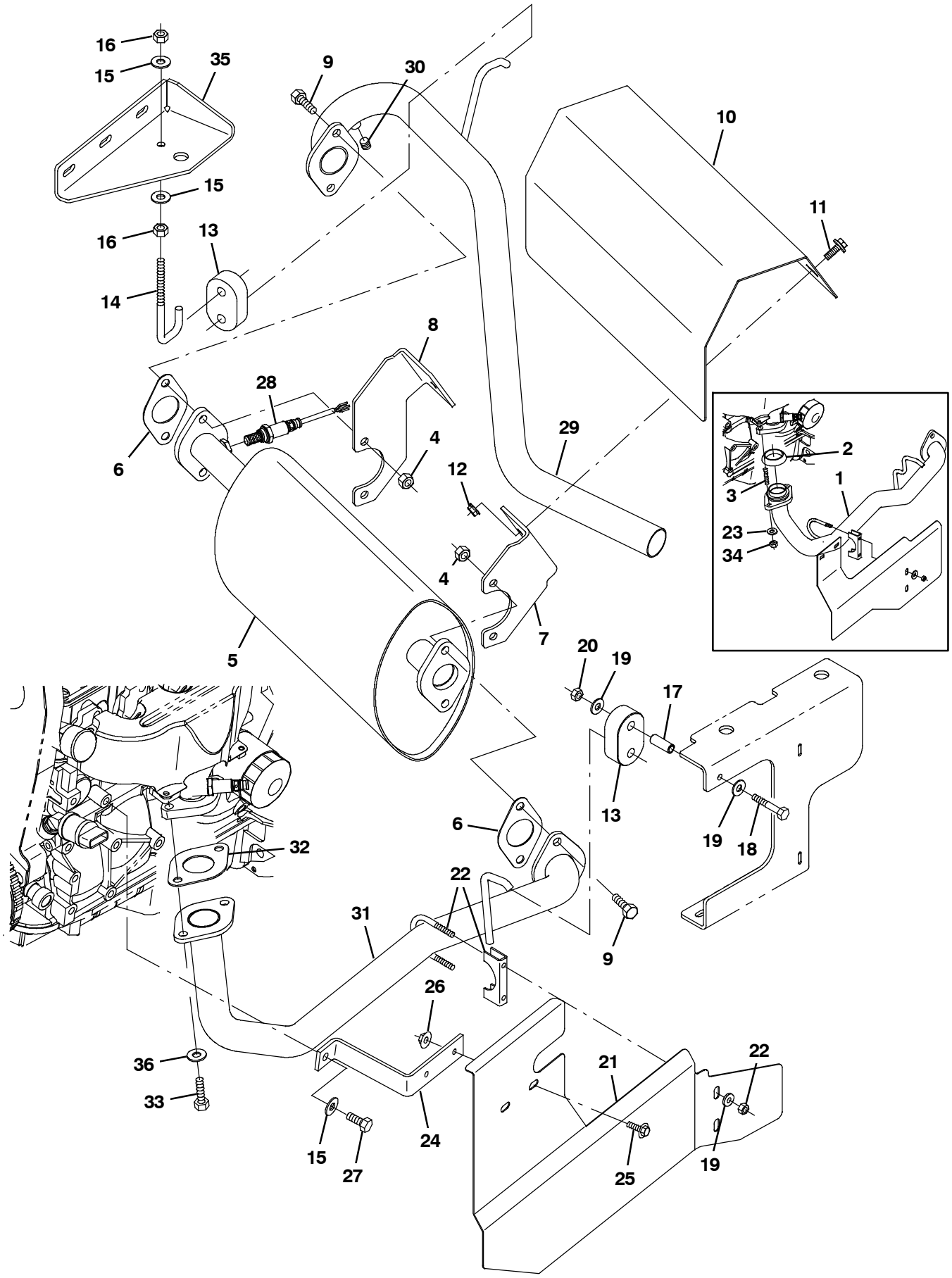

354668

Fig. 35 - Engine Muffler Group (000000-005699)

Ref.	Part No.	Serial Number	Description	Qty.
1	9008229	(000000-002099)	Tube Kit, Exhaust, Repair, Gas/Lpg [S30]	1
2	371861	(000000-002099)	Gasket, Flng, Pipe, Exhaust	1
3	384442	(000000-002099)	Stud, M10 X 1.50 [35]	2
4	08166	(000000-005699)	Nut, Hex, Stover, M10 X 1.50	6
5	1028136	(000000-002003)	Muffler, Catalytic [Gm 1.6l 2007]	1
5	1056241	(002004-005699)	Muffler, Catalytic [Gm 1.6l 2010]	1
6	1011216	(000000-005699)	Gasket, Exhaust, .07, 1.63id, 2/3.4bc	2
7	1043552	(000000-005699)	Bracket, Mtg, Heat Shield	1
8	1043558	(000000-005699)	Bracket, Mtg, Heat Shield	1
9	33612	(000000-005699)	Screw, Hex, M10 X 1.25 X 35, 8.8	4
10	1034321	(000000-005699)	Shield, Heat	1
11	1037346	(000000-005699)	Screw, Hex, M8 X 1.25 X 25, 9.8, Sems	2
12	07791	(000000-005699)	Nut, Hex, Flng, M8 X 1.25	2
13	1013031	(000000-005699)	Isolator, Rbr	2
14	1013117	(000000-005699)	Rod, Hanger, Isolator	1
15	32492	(000000-005699)	Washer, Flat, 0.38, Std	3
16	25014	(000000-005699)	Nut, Hex, Std, .38-16	2
17	222497	(000000-005699)	Sleeve, P/M, 0.31b 0.50d 1.3l [430ss]	1
18	39278	(000000-005699)	Screw, Hex, M8 X 1.25 X 50, 8.8	1
19	32491	(000000-005699)	Washer, Flat, 0.31, Std	4
20	08709	(000000-005699)	Nut, Hex, Lock, M8 X 1.25, Nl	1
21	9004516	(000000-005699)	Shield, Heat, W/ Label, Gas/Lp, Replmt	1
22	24012	(000000-005699)	Clamp, Muffler, 1.62d	1
23	41187	(000000-002099)	Washer, Flat, Belleville, .38	2
24	1028017	(000000-005699)	Bracket, Exhaust	1
25	1036892	(000000-005699)	Screw, Hex, M6 X 1.00 X 25, 9.8 Sems	2
26	07790	(000000-005699)	Nut, Hex, Flng, M6 X 1.00	2
27	06961	(000000-005699)	Screw, Hex, M10 X 1.50 X 20, 8.8	1
28	1028558	(000000-005699)	Sensor, Exhaust, Tailpipe	1
29	1034314	(000000-005699)	Tube, Exhaust, Tailpipe, 3 Wheel	1
30	10552	(000000-005699)	Fitting, Pipe, Plug, Pm02, Soc Head	1
31	1059474	(002100-005699)	Tube Wldt, Exhaust, Muffler, Gas/Lpg	1
32	1011216	(002100-005699)	Gasket, Exhaust, .07, 1.63id, 2/3.4bc	1
33	39284	(002100-005699)	Screw, Hex, M10 X 1.50 X 35, 8.8	2
34	08166	(000000-002099)	Nut, Hex, Stover, M10 X 1.50	2
35	1060745	(000000-005699)	Bracket, Mtg, Fan Shrd	1
36	32492	(002100-005699)	Washer, Flat, 0.38, Std	2

Fig. 36 - Engine Muffler Group (005700-)

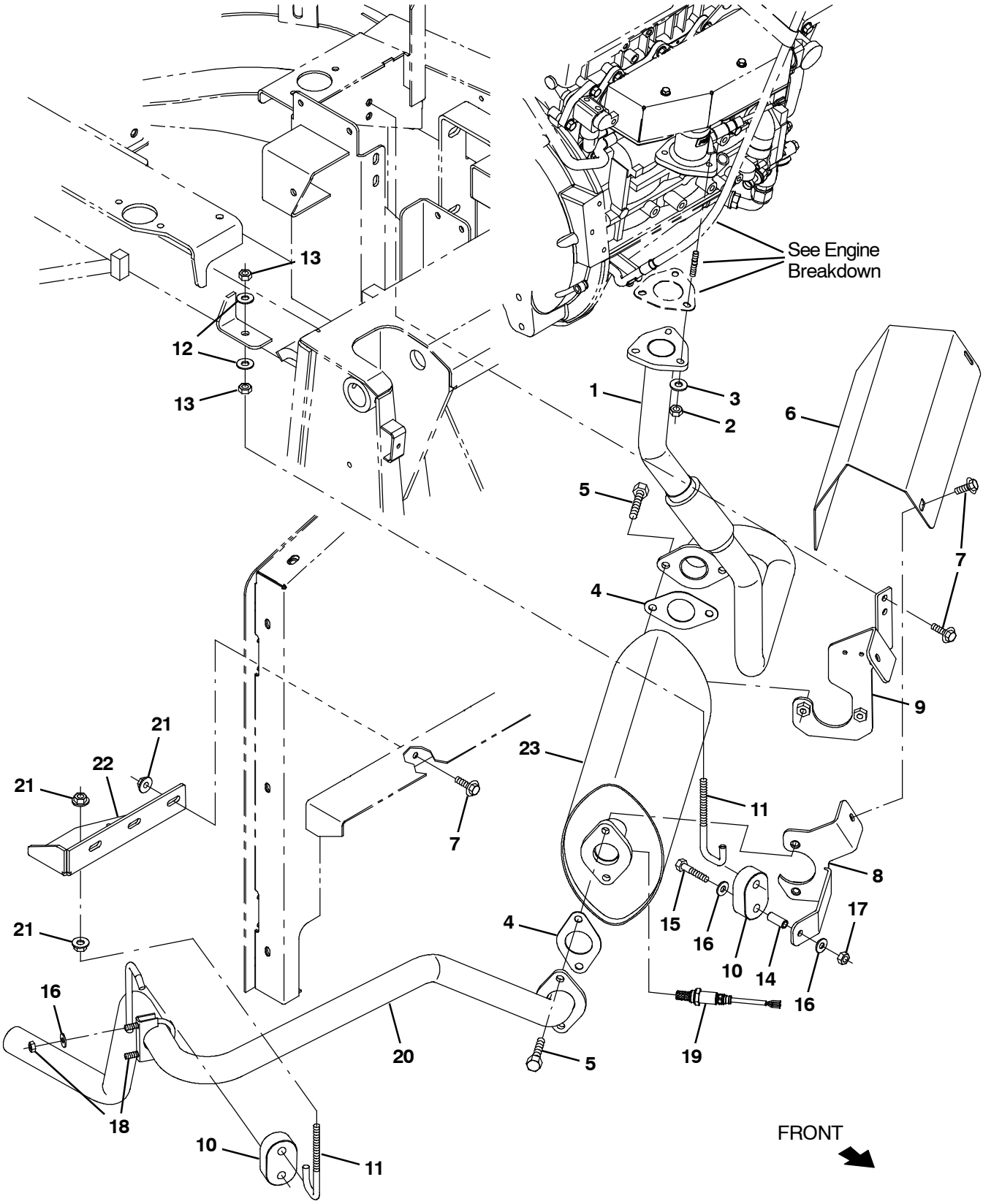

356371 - G, LP

Fig. 36 - Engine Muffler Group (005700-)

Ref.	Part No.	Serial Number	Description	Qty.
1	1071229	(005700-)	Pipe, Exhaust, Flex [S30 Mit 2013]	1
2	08165	(005700-)	Nut, Hex, Stover, M8	3
3	39349	(005700-)	Washer, Flat, 0.31, Sae	3
4	1011216	(005700-)	Gasket, Exhaust, .07, 1.63id, 2/3.4bc	2
5	39284	(005700-)	Screw, Hex, M10 X 1.50 X 35, 8.8	4
6	1071242	(005700-)	Shield, Heat, G/Lpg [S30 Mit 2013]	1
7	1037346	(005700-)	Screw, Hex, M8 X 1.25 X 25, 9.8, Sems	6
8	1071656	(005700-)	Bracket Wldt, Mtg, Muffler [Mit 2013]	1
9	1071243	(005700-)	Bracket, Mtg, Shield, Outlet	1
10	1013031	(005700-)	Isolator, Rbr	2
11	1013117	(005700-)	Rod, Hanger, Isolator	2
12	32492	(005700-)	Washer, Flat, 0.38, Std	2
13	25014	(005700-)	Nut, Hex, Std, .38-16	2
14	222497	(005700-)	Sleeve, P/M, 0.32b 0.50d 1.3l [430ss]	1
15	39278	(005700-)	Screw, Hex, M8 X 1.25 X 50, 8.8	1
16	32491	(005700-)	Washer, Flat, 0.31, Std	4
17	08709	(005700-)	Nut, Hex, Lock, M8 X 1.25, Nl	1
18	24012	(005700-)	Clamp, Muffler, 1.62d	1
19	1028558	(005700-)	Sensor, Exhaust, Tailpipe	1
20	1071258	(005700-)	Pipe, Exhaust, G/Lpg [Mit 2013]	1
21	07791	(005700-)	Nut, Hex, Flng, M8 X 1.25	4
22	1060745	(005700-)	Bracket, Mtg, Fan Shrd	1
23	1071376	(005700-)	Muffler, Catalytic [Mit 2.0l 2013]	1

Fig. 37 - Engine Fuel Tank Group, Gas

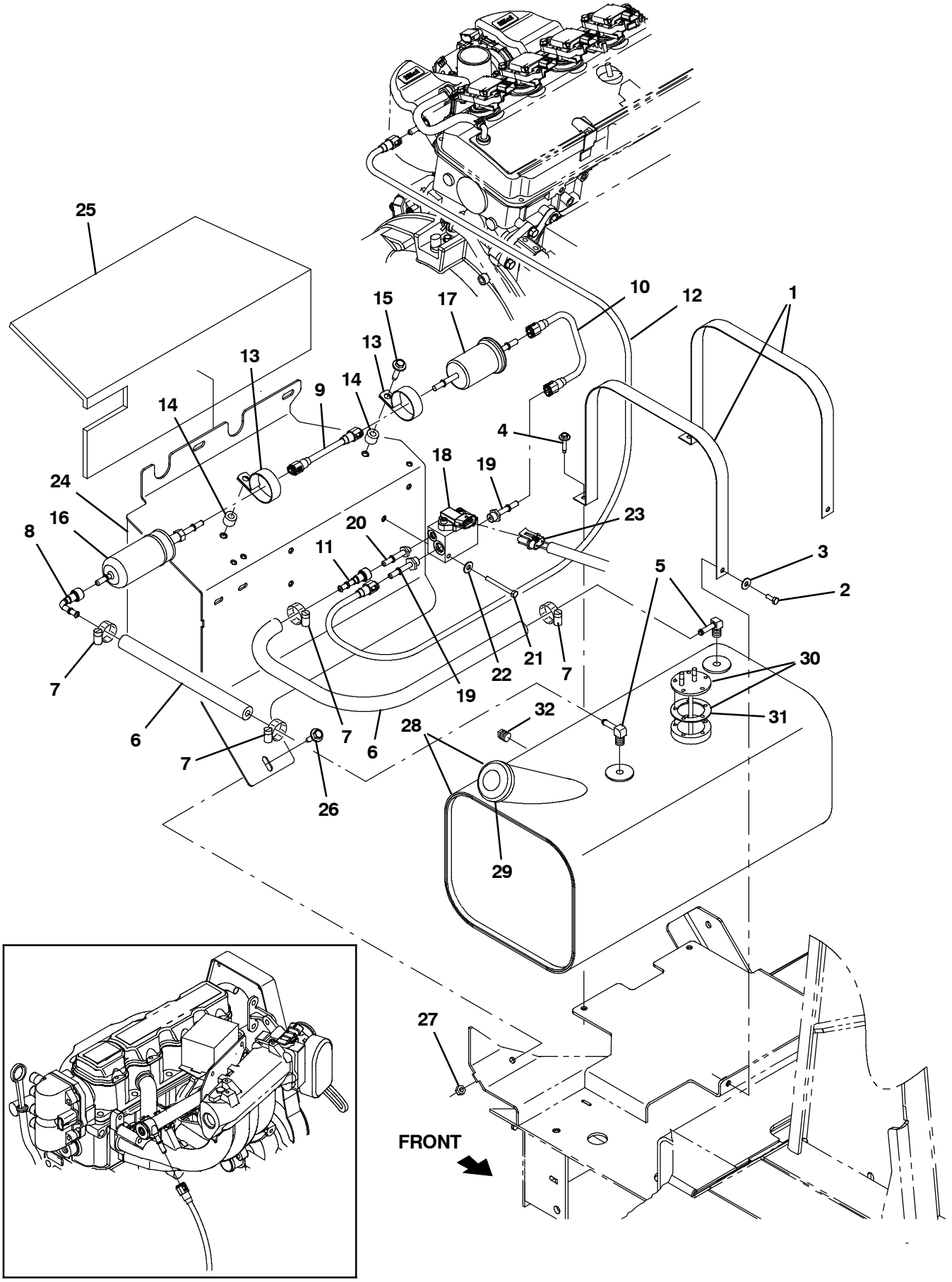

354664

Fig. 37 - Engine Fuel Tank Group, Gas

	Ref.	Part No.	Serial Number	Description	Qty.
	1	1033630	(000000-)	Strap, Tank, Fuel	2
	2	06942	(000000-)	Screw, Hex, M6 X 1.00 X 16, 8.8	2
	3	32490	(000000-)	Washer, Flat, 0.25, Std	2
	4	1037345	(000000-)	Screw, Hex, M6 X 1.00 X 30, 9.8, Sems	2
	5	9000355	(000000-)	Fitting, Brs, E90, Em05/Pm04	2
	6	1033746	(000000-)	Hose, Fuel, 0.31id [Evap Emission 07]	2
	7	43844	(000000-)	Clamp, Hose, Wormdrive, 0.25-0.62d, .31w	4
	8	1019939	(000000-)	Connector, Fuel, E90, Qf	1
	9	1012248	(000000-)	Fuelline, .31d Str/Str, Plstc	1
	10	1013509	(000000-)	Fuelline, .31d Str/Str, Plstc [8200]	1
	11	1013086	(000000-)	Connector, Fuel, Qf	1
	12	1034633	(000000-)	Fuelline, .31d Str/Str, Plstc	1
	13	1011895	(000000-)	Clamp, Cable, Stl, 2.00d X 0.75w, 1hole	2
	14	383981	(000000-)	Sleeve, P/M, 0.37b 0.75d 0.6l, Stl	2
	15	1037355	(000000-)	Screw, Hex, M8 X 1.25 X 35, 9.8, Sems	2
	16	1011107	(000000-)	Pump, Fuel, Hi Press [Gm 1.6l/3.0l]	1
	17	372440	(000000-)	Filter, Fuel [Gm 1.6l/3.0l]	1
	18	1028924	(000000-)	Manifold, Gas, Relief, Valve	1
	19	1029293	(000000-)	Fitting, Fuel, Str, 0.56-18 [07 Eng]	2
	20	1029295	(000000-)	Fitting, Fuel, Str, 0.38-24 [07 Eng]	1
	21	06548	(000000-)	Screw, Hex, M6 X 1.00 X 60, 8.8	2
	22	32490	(000000-)	Washer, Flat, 0.25, Std	2
	23	1032112	(000000-)	Harness, Pump, Fuel [Coyote]	1
	24	1044992	(000000-)	Panel Wldt, Deflector, Heat	1
	25	1035813	(000000-)	Insulation, Flame-Retardant, 0.5	1
	26	1037346	(000000-)	Screw, Hex, M8 X 1.25 X 25, 9.8, Sems	3
	27	07791	(000000-)	Nut, Hex, Flng, M8 X 1.25	3
▽	28	1033575	(000000-)	Tank, Fuel	1
▲	29	1032812	(000000-)	Cap, Fuel, Tank	1
▲▽	30	1046613	(000000-)	Send-Unit, Fuel	1
▲▲	31	1033897	(000000-)	Gasket, Sender, Fuel	1
▲	32	02351	(000000-)	Fitting, Pipe, Plug, Pm04, Sq Head	1

Fig. 38 - Engine Fuel Tank Group, LPG

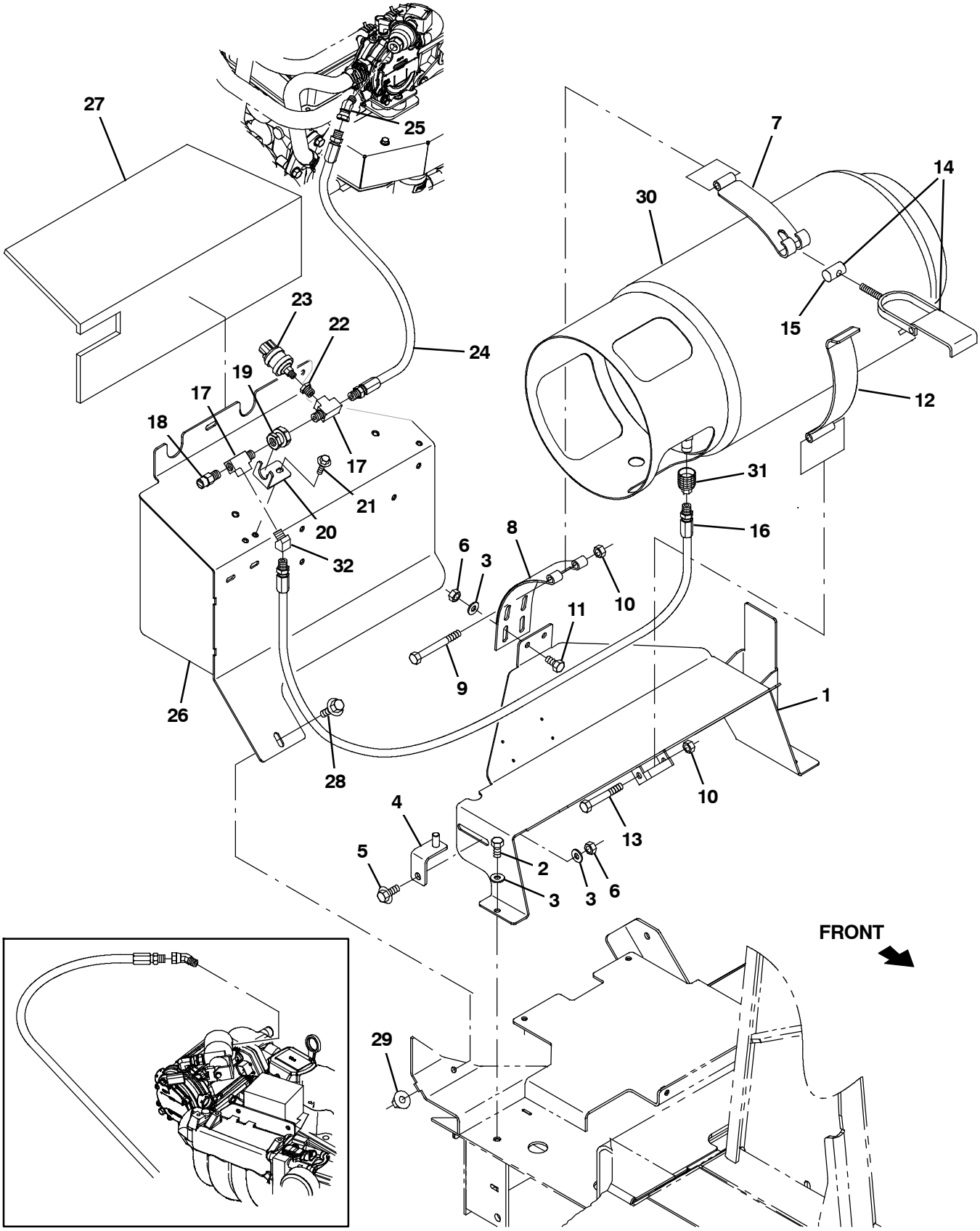

354665

Fig. 38 - Engine Fuel Tank Group, LPG

	Ref.	Part No.	Serial Number	Description	Qty.
	1	1028129	(000000-)	Tray Wldt, Lpg	1
	2	09740	(000000-)	Screw, Hex, M8 X 1.25 X 20, Ss	3
	3	32491	(000000-)	Washer, Flat, 0.31, Std	6
	4	1043813	(000000-)	Bracket Wldt, Tank, Lpg	1
	5	1037354	(000000-)	Screw, Hex, M8 X 1.25 X 30, 9.8, Sems	1
	6	08709	(000000-)	Nut, Hex, Lock, M8 X 1.25, Nl	2
	7	1036270	(000000-)	Strap, Mtg, Tank, Lpg	1
	8	58589	(000000-)	Strap, Mtg, Tank, Lpg	1
	9	35710	(000000-)	Screw, Hex, .38-16 X 3.75, G5	1
	10	50902	(000000-)	Nut, Hex, Lock, .38-16, Nl	2
	11	16931	(000000-)	Screw, Hex, M8 X 1.25 X 20, 8.8	2
	12	1037998	(000000-)	Retainer, Tank, Lpg	1
	13	35707	(000000-)	Screw, Hex, .38-16 X 3.00, G5	1
▽	14	53400-1	(000000-)	Latch Assy, Mtg, Tank, Lpg, W/Nut	1
▲	15	53400-4	(000000-)	Nut, Adj, Mtg, Tank, Lpg	1
	16	22308-3	(000000-)	Hose, Lpg, Med05, Pm04str/Sm04str, 035.0	1
	17	56976A	(000000-)	Fitting, Hyd, Tee, Pf04/Pf04/Pm04, Run	2
	18	24047	(000000-)	Valve, Lpg, Press Relief [Rego]	1
	19	78122	(000000-)	Fitting, Brs, Str, Pf04/Pf04, Bh	1
	20	1043747	(000000-005907)	Bracket, Angle, Mtg, Relief Valve	1
	20	1048974	(005908-)	Bracket, Angle, Mtg, Relief Valve	1
	21	1040467	(000000-)	Screw, Hex, M6 X 1.0 X 20, 9.8, Sems	2
	22	17414	(000000-)	Fitting, Hyd, Str, Pf02/Pm04	1
	23	23156	(000000-)	Switch, Press, 0070psi Spst Nc 12vdc 08a	1
	24	19760	(000000-)	Hose, Lpg, Med05, Pm04str/Sm04str, 055.0	1
	25	392645	(000000-)	Fitting, Pipe, E45, Spcl	1
	26	1044992	(000000-)	Panel Wldt, Deflector, Heat	1
	27	1035813	(000000-)	Insulation, Flame-Retardant, 0.5	1
	28	1037346	(000000-)	Screw, Hex, M8 X 1.25 X 25, 9.8, Sems	3
	29	07791	(000000-)	Nut, Hex, Flng, M8 X 1.25	3
	30	24928-1	(000000-)	Tank, Lpg, 33lb, W/ Gauge [Empty, Liq]	1
	31	26496	(000000-)	Fitting, Brs, Qdc, Pf04, Lpg Fem	1
	32	47720	(000000-)	Fitting, Hyd, E45, Pf04/Pm04	1

Fig. 39 - Engine Radiator Mount and Fan Group (000000-002099)

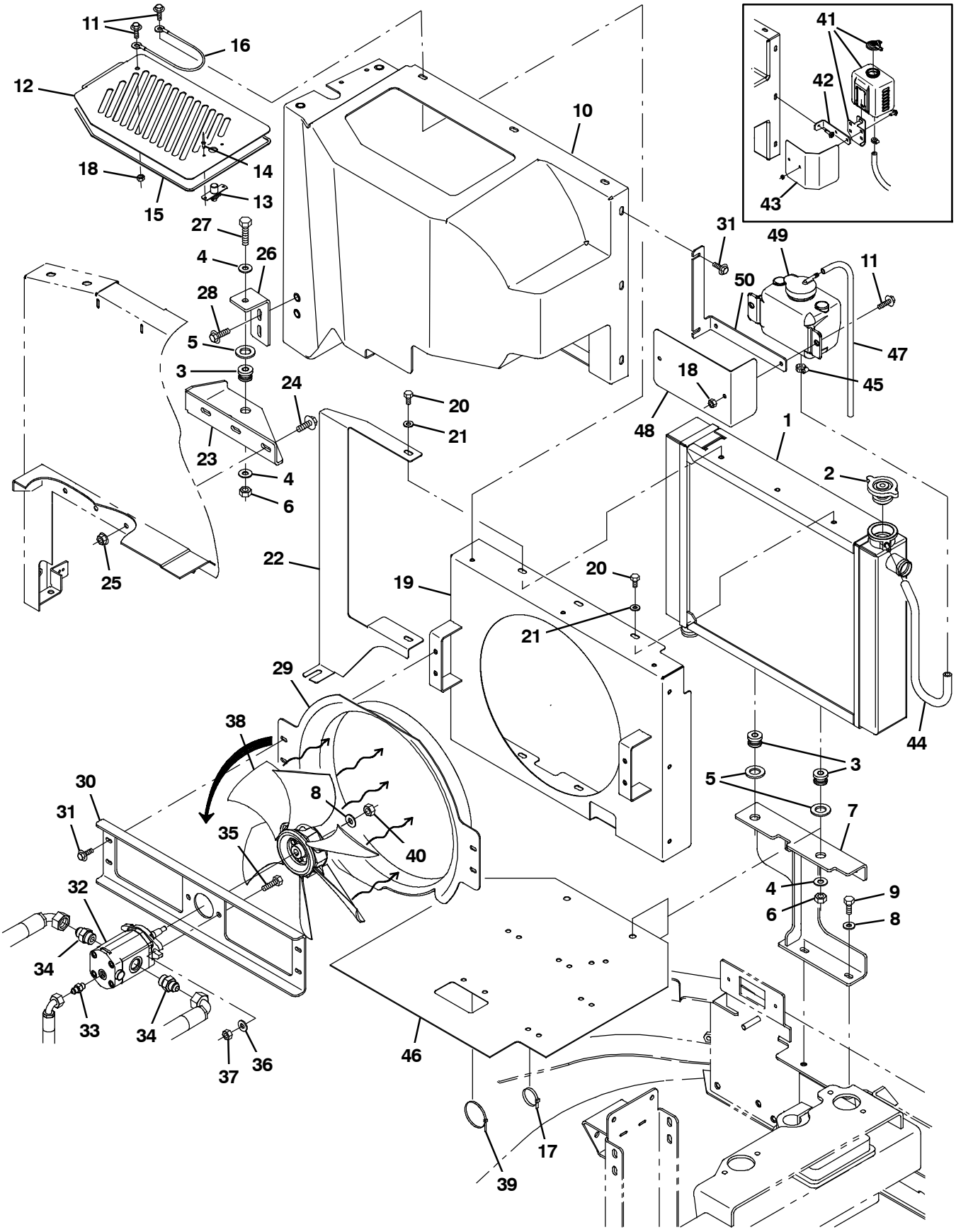

354669 - G/LP

Fig. 39 - Engine Radiator Mount and Fan Group (000000-002099)

Ref.	Part No.	Serial Number	Description	Qty.
1	1041839	(000000-002099)	Radiator [Cross-Flow]	1
2	1045764	(000000-002099)	Cap, Radiator, 14psi [Stant Ao-2516]	1
3	54274	(000000-002099)	Isolator, Vib, Bshg, 1.1d 0.6l .4b 0.78h	3
4	32492	(000000-002099)	Washer, Flat, 0.38, Std	4
5	39350	(000000-002099)	Washer, Flat, 0.75, Sae	3
6	41430	(000000-002099)	Nut, Hex, Lock, M10 X 1.5, Nl	3
7	1027589	(000000-002099)	Bracket Wldt, Mtg, Radiator	1
8	32491	(000000-002099)	Washer, Flat, 0.31, Std	3
9	39277	(000000-002099)	Screw, Hex, M8 X 1.25 X 25, 8.8	2
10	1030572	(000000-002099)	Shroud, Cooling	1
11	1040467	(000000-002099)	Screw, Hex, M6 X 1.0 X 20, 9.8, Sems	12
12	1057999	(000000-002099)	Door, Access	1
13	140962	(000000-002099)	Latch, Cmpr, Spring, Knurled Knob, Pl	1
14	34738	(000000-002099)	Rivet, Blind, .125d X 0.32 X .25d, Stl	2
15	1044391	(000000-002099)	Seal, Rbr, Open, 0.12, 0.25w 27.4l Adh	1
16	19676	(000000-002099)	Cable, Glv .09d 013.0l .38eye /.38eye	1
17	49266	(000000-002099)	Tie, Cable, Nyl, 07.3l .19w 1.8 Max D	5
18	08708	(000000-002099)	Nut, Hex, Lock, M6 X 1.00, Nl	3
19	1030475	(000000-002099)	Shroud Wldt, Radiator	1
20	06941	(000000-002099)	Screw, Hex, M6 X 1.00 X 10, 8.8	6
21	32490	(000000-002099)	Washer, Flat, 0.25, Std	6
22	1030626	(000000-002099)	Plate, Filler	1
23	1034547	(000000-002099)	Bracket, Mtg, Fan Shrd	1
24	1037346	(000000-002099)	Screw, Hex, M8 X 1.25 X 25, 9.8, Sems	2
25	07791	(000000-002099)	Nut, Hex, Flng, M8 X 1.25	2
26	1043759	(000000-002099)	Bracket, Mtg, Cooling Shrd	1
27	06962	(000000-002099)	Screw, Hex, M10 X 1.50 X 45, 8.8	1
28	1037354	(000000-002099)	Screw, Hex, M8 X 1.25 X 30, 9.8, Sems	2
29	9006886	(000000-001891)	Shroud Kit, Fan, Afmkt	1
29	1054428	(001892-002099)	Shroud, Fan	1
30	1030306	(000000-002099)	Channel, Mtg, Fan Motor	1
31	1036892	(000000-002099)	Screw, Hex, M6 X 1.00 X 25, 9.8 Sems	5
32	1031026	(000000-002099)	Motor, Hyd, Gear, Ext 0.67 Rh 2500	1
33	55586	(000000-002099)	Fitting, Hyd, Str, Jm04/Om04	1
34	56692	(000000-002099)	Fitting, Hyd, Str, Jm08/Om10	2
35	76570	(000000-002099)	Screw, Hex, M8 X 1.25 X 30, 8.8	2
36	39349	(000000-002099)	Washer, Flat, 0.31, Sae	2
37	08709	(000000-002099)	Nut, Hex, Lock, M8 X 1.25, Nl	2
38	1031566	(000000-002099)	Fan, Cooling, 14.1d, 6 Blade, 0.5b Taper	1
39	49263	(000000-002099)	Tie, Cable, Nyl, 11.4l .19w 3.0 Max D	1
40	32960	(000000-002099)	Nut, Hex, Lock, .31-24, Nl	1
41	1023853	(000000-002003)	Tank, Coolant, 03.30w 4.7hi 04.7l,1liter	1
42	1031027	(000000-002003)	Bracket, Mtg, Tank	1
43	1043896	(000000-002003)	Shield, Heat	1
44	381391	(000000-002099)	Hose, Drain, Overflow, Radiator	1
45	43844	(000000-002099)	Clamp, Hose, Wormdrive, 0.25-0.62d, .31w	1
46	1044229	(000000-002099)	Skirt, Neo, .06, 20.00w 20.00l	1
47	87738	(000000-002099)	Hose, Fuel, 0.18id, 29.0l	1
48	1056406	(002004-002099)	Shield, Heat, Tank [Gm 2010]	1
49	1054382	(002004-002099)	Tank, Coolant, 03.6w 04.1hi 05.5l,1liter	1
50	1056407	(002004-002099)	Bracket, Mtg, Tank [Gm 2010]	1

Fig. 40 - Engine Radiator Mount and Fan Group (002100-)

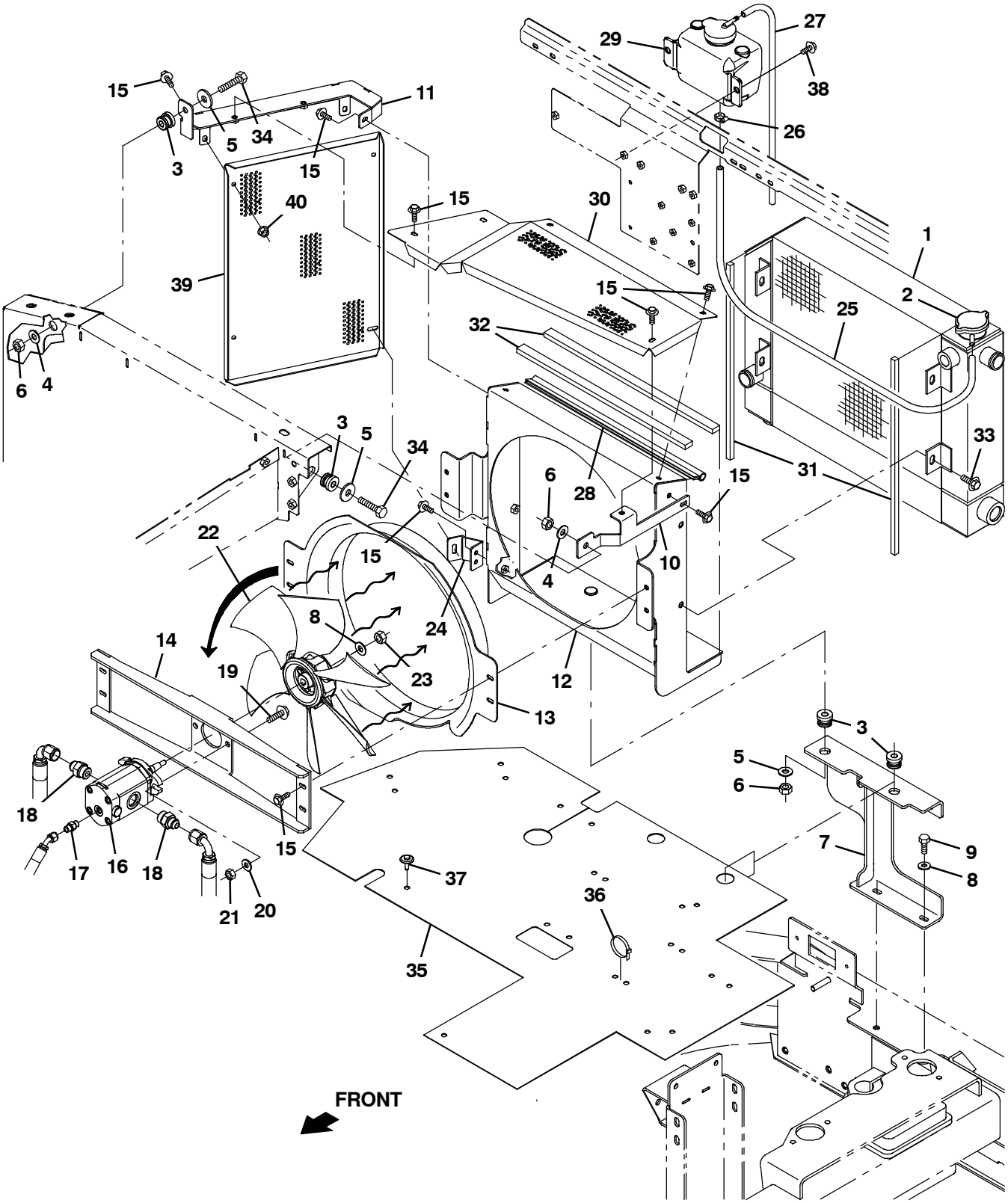

354669 - G/LP

Fig. 40 - Engine Radiator Mount and Fan Group (002100-)

Ref.	Part No.	Serial Number	Description	Qty.
1	1051863	(002100-)	Radiator, W/ Hyd Cooler [Side X Side]	1
2	1045764	(002100-)	Cap, Radiator, 14psi [Stant Ao-2516]	1
3	54274	(002100-)	Isolator, Vib, Bshg, 1.1d 0.6l .4b 0.78h	4
4	32492	(002100-)	Washer, Flat, 0.38, Std	2
5	1014563	(002100-)	Washer, Flat, 0.40b 1.12d .12, Ss	3
6	41430	(002100-)	Nut, Hex, Lock, M10 X 1.5, Nl	4
7	1027589	(002100-)	Bracket Wldt, Mtg, Radiator	1
8	32491	(002100-)	Washer, Flat, 0.31, Std	3
9	39277	(002100-)	Screw, Hex, M8 X 1.25 X 25, 8.8	2
10	1058670	(002100-)	Bracket, Sppt, Radiator	1
11	1058404	(002100-)	Bracket Wldt, Sppt, Radiator, Rh	1
12	1055564	(002100-)	Bracket Wldt, Radiator	1
13	1054428	(002100-)	Shroud, Fan	1
14	1060343	(002100-)	Bracket Wldt, Mtg, Motor	1
15	1036892	(002100-)	Screw, Hex, M6 X 1.00 X 25, 9.8 Sems	15
16	1031026	(002100-)	Motor, Hyd, Gear, Ext 0.67 Rh 2500	1
17	55586	(002100-002999)	Fitting, Hyd, Str, Jm04/Om04	1
17	762428	(003000-)	Fitting, Hyd, Str, Fm04/Om04	1
18	56692	(002100-002999)	Fitting, Hyd, Str, Jm08/Om10	2
18	762456	(003000-)	Fitting, Hyd, Str, Fm08/Om10	2
19	1037355	(002100-)	Screw, Hex, M8 X 1.25 X 35, 9.8, Sems	2
20	39349	(002100-)	Washer, Flat, 0.31, Sae	2
21	08709	(002100-)	Nut, Hex, Lock, M8 X 1.25, Nl	2
22	1031566	(002100-)	Fan, Cooling, 14.1d, 6 Blade, 0.5b Taper	1
23	32960	(002100-)	Nut, Hex, Lock, .31-24, Nl	1
24	1055002	(002100-)	Bracket, Mtg, Condenser	1
25	1014843	(002100-)	Hose, Afmkt, Coolant Recvy, 05ft	1
26	43844	(002100-)	Clamp, Hose, Wormdrive, 0.25-0.62d, .31w	1
27	87738	(002100-)	Hose, Fuel, 0.18id, 29.0l	1
28	1031623	(002100-)	Seal, Afmkt, Bulb, Str, .50d F/11ga 02ft	1
29	1054382	(002100-)	Tank, Coolant, 03.6w 04.1hi 05.5l,1liter	1
30	1059052	(002100-)	Guard, Fan	1
31	1015205	(002100-)	Seal, Afmkt, Ure, Adh, 0.38, 0.38w 02ft	2
32	1015314	(002100-)	Seal, Afmkt, Bulb, Adh 0.38, 0.75w 02ft	2
33	1037346	(002100-)	Screw, Hex, M8 X 1.25 X 25, 9.8, Sems	4
34	06962	(002100-)	Screw, Hex, M10 X 1.50 X 45, 8.8	1
35	1061498	(002100-005699)	Skirt, Neo, .06, 30.00w 41.00l [3 Wheel]	1
35	1071722	(005700-)	Skirt, Neo, .06, 30.00w 41.00l[Mit 2013]	1
36	49266	(002100-)	Tie, Cable, Nyl, 07.3l .19w 1.8 Max D	8
37	72970	(002100-)	Rivet, Plstc, .250d X 0.90	3
38	1040467	(002100-)	Screw, Hex, M6 X 1.00 X 20, 9.8, Sems	2
39	1060009	(002100-)	Guard, Fan	1
40	07790	(002100-)	Nut, Hex, Flng, M6 X 1.00	3

Fig. 41 - Engine Radiator Hoses Group, Gas/LPG (000000-005699)

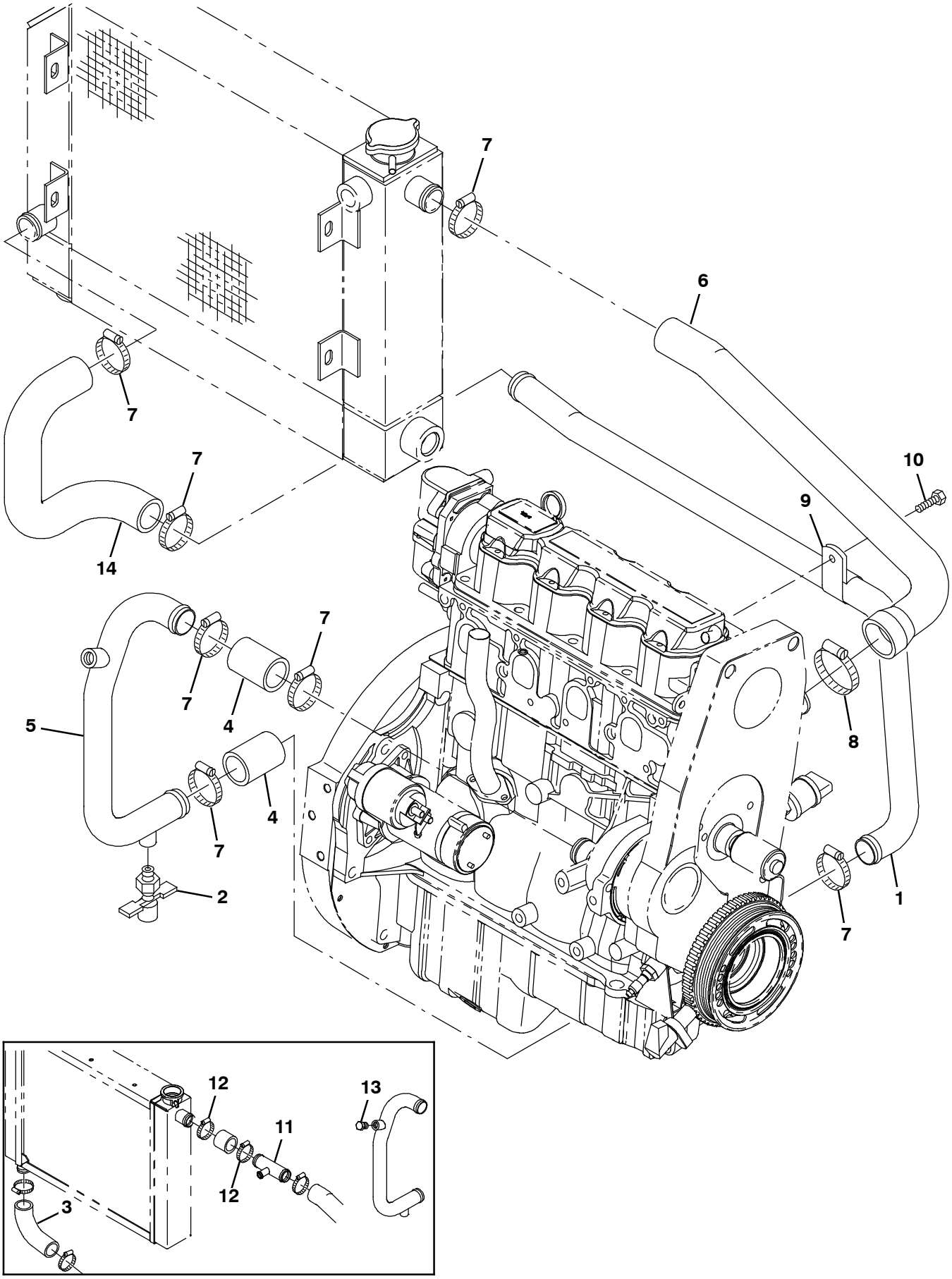

354670

Fig. 41 - Engine Radiator Hoses Group, Gas/LPG (000000-005699)

Ref.	Part No.	Serial Number	Description	Qty.
1	1030970	(000000-005699)	Tube, Coolant, 1.3d, Lower	1
2	54911-32	(000000-005699)	Fitting, Draincock, .25npt	1
3	1007482	(000000-002099)	Hose, Rbr, E90, 1.25id 1.25id 04.2 03.1	1
4	377212	(000000-005699)	Hose, Rbr, 1.25id 1.62od 02.2l	2
5	1029288	(000000-005699)	Tube, Coolant, Eng	1
6	1029259	(000000-005699)	Hose, Radiator, Mold	1
7	79381	(000000-005699)	Clamp, Hose, Wormdrive, 1.25-2.00d, .50w	7
8	22297	(000000-005699)	Clamp, Hose, Wormdrive, 1.56-2.50d, .50w	1
9	86328	(000000-005699)	Clamp, Cable, Stl, 1.50d X 0.75w, 1hole	1
10	21194	(000000-005699)	Screw, Hex, .38-16 X 0.62, G5	1
11	1058623	(002004-002099)	Tube Wldt, Tee	1
12	11531	(002004-002099)	Clamp, Hose, Wormdrive, 1.06-2.00d, .56w	2
13	762282	(002004-002099)	Fitting, Hyd, Plug, Pm06	1
14	1055029	(002100-005699)	Hose, Rbr, 1.25id 1.25id	1

Fig. 42 - Engine Radiator Hoses Group, Gas/LPG (005700-)

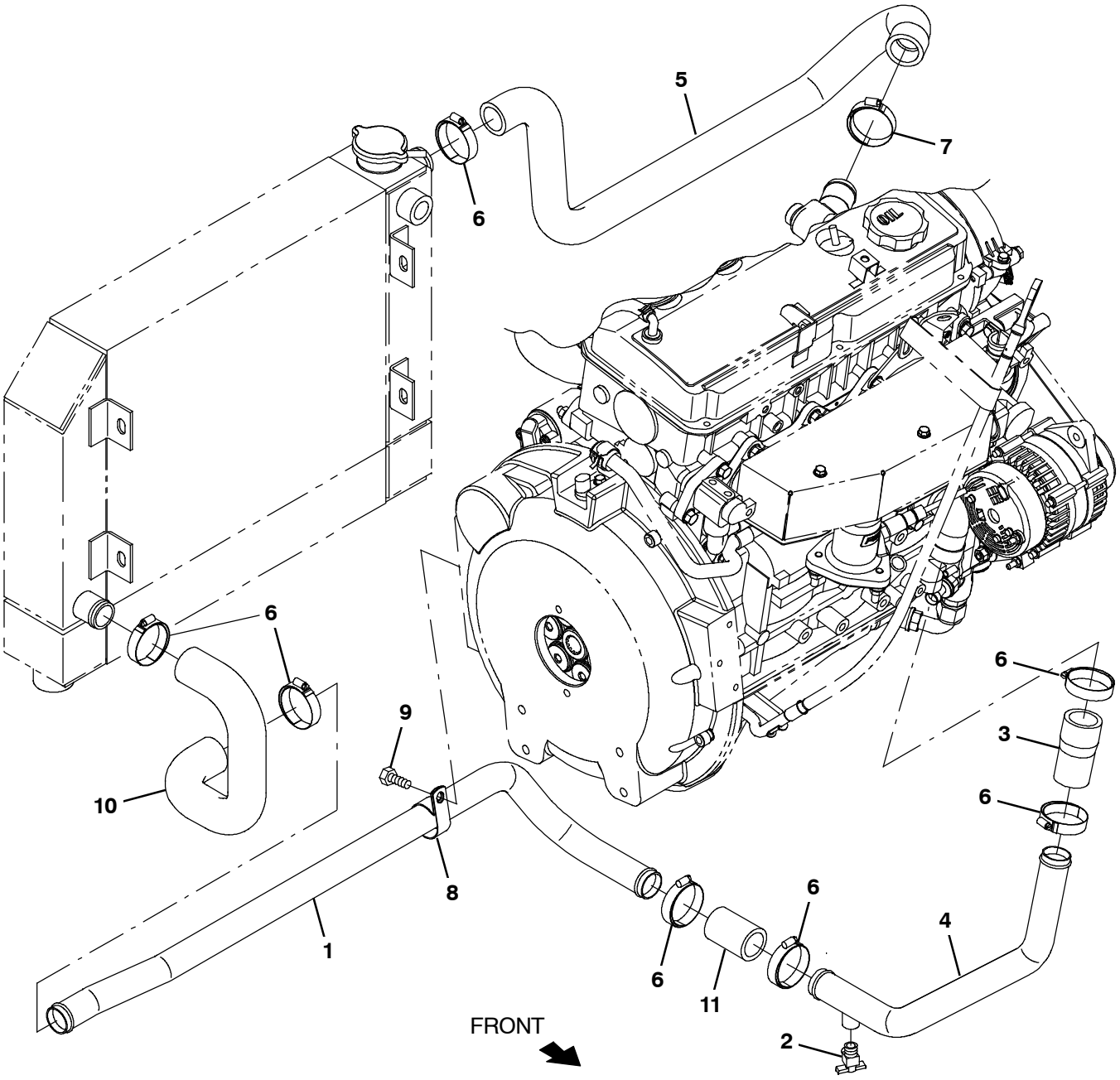

356372 - G, LP

Fig. 42 - Engine Radiator Hoses Group, Gas/LPG (005700-)

Ref.	Part No.	Serial Number	Description	Qty.
1	1071010	(005700-)	Tube, Coolant, 1.3d, Lower	1
2	54911-32	(005700-)	Fitting, Draincock, .25npt	1
3	1072384	(005700-)	Hose, Rbr, 1.125id X1.25id, 03.00l	1
4	1071014	(005700-)	Tube, Coolant, Lower [Mit 2013 S30]	1
5	1070976	(005700-)	Hose, Coolant, Upper, Mold [Mit 2013]	1
6	79381	(005700-)	Clamp, Hose, Wormdrive, 1.25-2.00d, .50w	7
7	22297	(005700-)	Clamp, Hose, Wormdrive, 1.56-2.50d, .50w	1
8	86328	(005700-)	Clamp, Cable, Stl, 1.50d X 0.75w, 1hole	1
9	21194	(005700-)	Screw, Hex, .38-16 X 0.62, G5	1
10	1055029	(005700-)	Hose, Rbr, 1.25id 1.25id	1
11	1072386	(005700-)	Hose, Rbr, 1.125id, 02.25l	1

Fig. 43 - Wheel Group, Rear Drive S30 and XP

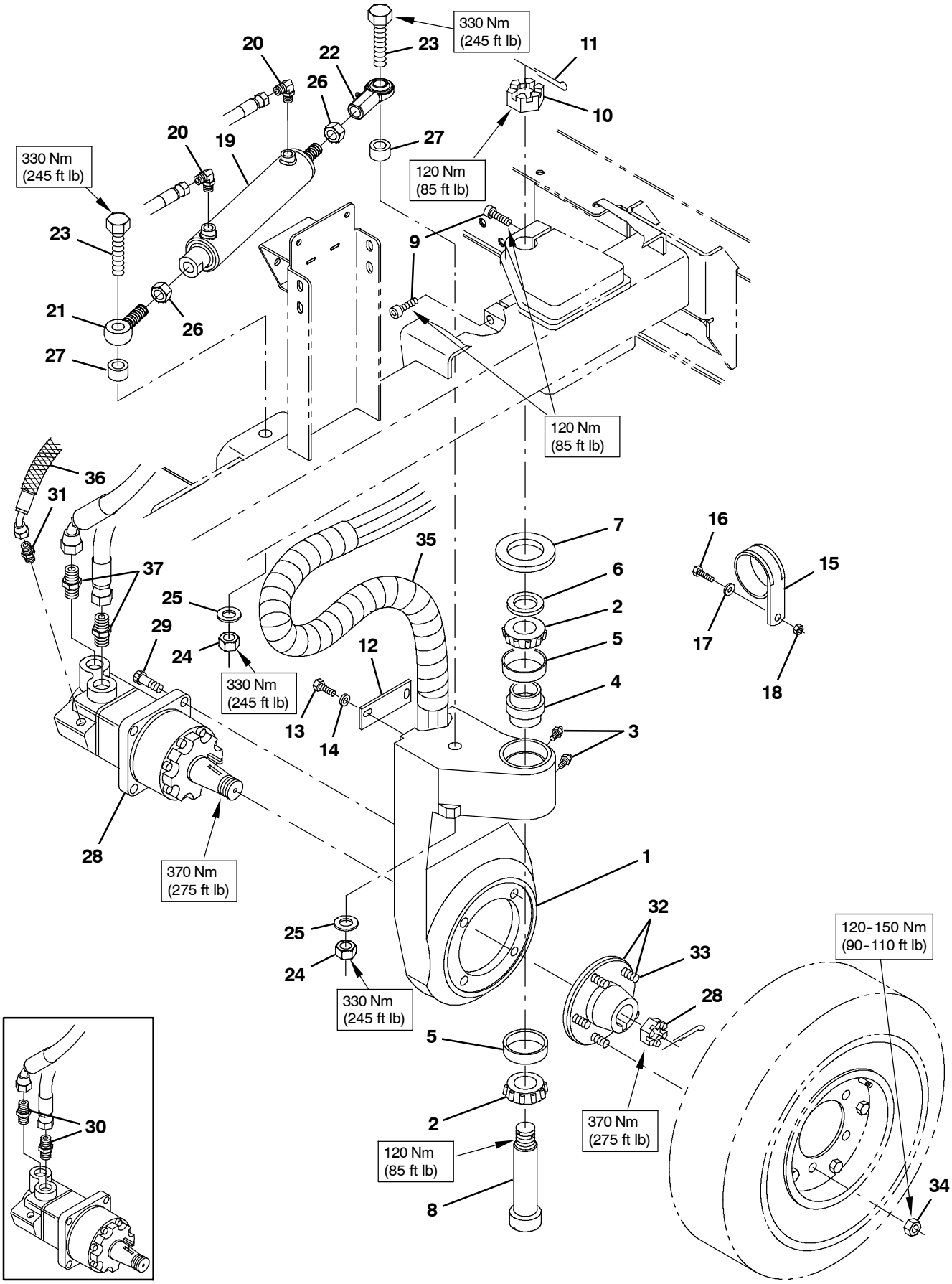

354685

Fig. 43 - Wheel Group, Rear Drive S30 and XP

	Ref.	Part No.	Serial Number	Description	Qty.
	1	1071053	(000000-)	Housing, Sppt, Drive	1
	2	51339	(000000-)	Bearing, Cone, 1.38b 0.71w	2
	3	47801	(000000-)	Fitting, Grease, Str Pm04 .63l	2
	4	374560	(000000-)	Seal, Drive, Rear, Grease Cav	1
	5	51338	(000000-)	Bearing, Cup, 2.56d 0.55w	2
	6	54051	(000000-)	Washer, Flat, 1.39b 2.12d .13, Stl	1
	7	374563	(000000-)	Washer, Flat, 2.16b 3.50d .16, Felt	1
	8	73281	(000000-)	Bolt, Shld, 1.37d X 5.13l,1.1-18 Drilled	1
	9	72926	(000000-)	Screw, Soc, M16 X 2.00 X 50, 12.9	2
	10	54052	(000000-)	Nut, Hex, Sltd, 1.12-18	1
	11	08329	(000000-)	Pin, Cotter, .125 X 2.50	1
	12	58842	(000000-)	Bar, Flat, Stl 0.19, 01.50 X 04.1l	1
	13	09011	(000000-)	Screw, Hex, M8 X 1.25 X 30, Ss	2
	14	32491	(000000-)	Washer, Flat, 0.31, Std	2
	15	70157	(000000-)	Clamp, Cable, Ss, 2.50d X 1.00w, 1hole	1
	16	09740	(000000-)	Screw, Hex, M8 X 1.25 X 20, Ss	1
	17	39349	(000000-)	Washer, Flat, 0.31, Sae	1
	18	07791	(000000-)	Nut, Hex, Flng, M8 X 1.25	1
▽	19	1028492	(000000-)	Cylinder, Hyd, 2.0b 15.0l 08.00strk 1500	1
▲		373698	(000000-)	Seal Kit	1
	20	56820	(000000-002999)	Fitting, Hyd, E90, Jm06/Om06	2
	20	762432	(003000-)	Fitting, Hyd, E90, Fm06/Om06	2
	21	64886	(000000-)	Rod-End, 0.75-16rh Mal 0.75b [Teflon]	1
	22	1042515	(000000-)	Rod-End, 0.75-16rh Fem 0.75b Zerk	1
	23	77345	(000000-)	Screw, Hex, .75-10 X 3.25, G5	2
	24	32987	(000000-)	Nut, Hex, Std, .75-10	2
	25	39350	(000000-)	Washer, Flat, 0.75, Sae	2
	26	32987	(000000-)	Nut, Hex, Lock, .75-10, Nl	2
	27	1034806	(000000-)	Tube, 0.77id 1.75od 00.7l, Stl, Pntd	2
	28	1027756	(000000-001802)	Motor, Hyd, Gear, Int 15.0 Bi-Dir 3000 (See Breakdowns)	1
	28	1054901	(001803-)	Motor, Hyd, Gear, Int 17.1 Bi-Dir 3000 (See Breakdowns)	1
	29	19583	(000000-)	Screw, Soc, .50-13 X 1.50, Al	4
	30	9008697	(000000-002687)	Hose Kit, Rear Drive, Replmt	1
	31	55685	(000000-002999)	Fitting, Hyd, Str, Jm04/Om06	1
	31	762426	(003000-)	Fitting, Hyd, Str, Fm04/Om06	1
▽	32	54087	(000000-)	Hub Assy, Wheel, 5 Bolt 4.50bc Taper B	1
▲	33	32126	(000000-)	Stud, Wheel, .50-20 X 1.50l, 0.370th	5
	34	24339	(000000-)	Nut, Wheel, .50-20 X 60 Angle	5
	35	1041393	(000000-)	Guard, Hose, Wrap, Plstc, 37.0	1
	36	57315	(000000-)	Sleeve, Nyl, 2.38id 05.0l	1
	37	762468	(002688-)	Fitting, Hyd, Str, Fm10/Om12	2

Fig. 44 - Wheel Assembly, Rear

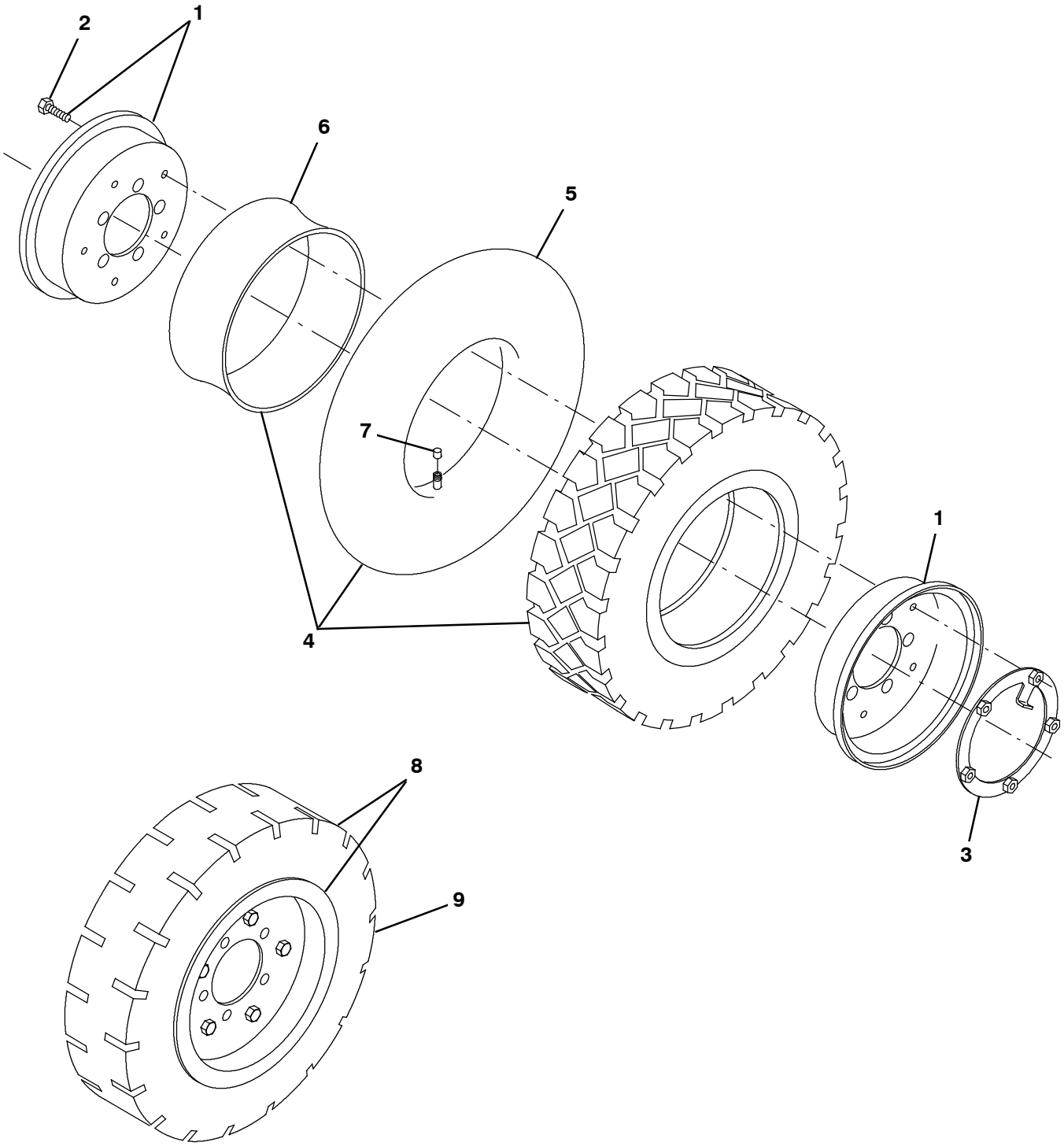

354702

Fig. 44 - Wheel Assembly, Rear

	Ref.	Part No.	Serial Number	Description	Qty.
▽		1005229	(000000-)	Tire Assy, Pneu, 570/500-08 4.5bc 5bolt (Standard)	1
▲▽	1	53818	(000000-)	Rim Assy, 08.0 X 3.8, 4.5bc /5bolt	1
▲▲	2	370181	(000000-)	Screw, Hex, M10 X 1.50 X 25, 10.9	5
▲	3	99997	(000000-)	Plate, Lock Plate	1
▲▽	4	53819	(000000-)	Tire, W/ Tube, W/ Flap	1
▲▲	5	70280	(000000-)	Innertube, Valve [5.00r-8, Js2, 500-8]	1
▲▲	6	53819-2	(000000-)	Flap, Tire/Tube, 570/500-8	1
▲▲	7	45786	(000000-)	Cap, Valve, Tire, Tubeless [Schrader]	1
▽	8	53817	(000000-)	Tire Assy, Solid, 18.0 X 4.3 4.5bc 5bolt (Option)	1
▲	9	53816	(000000-)	Tire, Solid, 18.0 X 7.0 X 8.0[4.33 Sc15]	1

Fig. 45 - Wheel and Brakes Group, Front Solid (Standard)

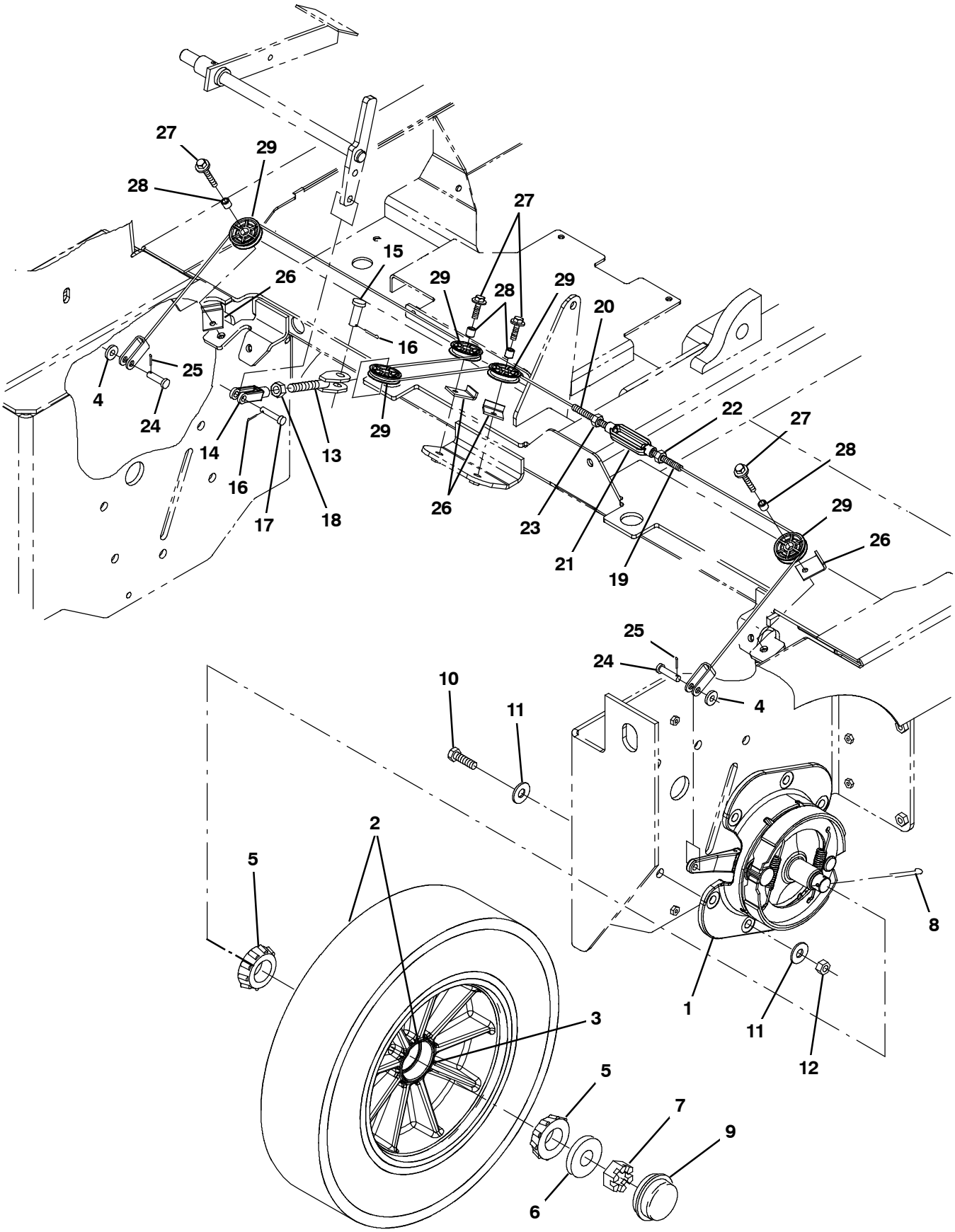

354686

Fig. 45 - Wheel and Brakes Group, Front Solid (Standard)

	Ref.	Part No.	Serial Number	Description	Qty.
▽	1	54577	(000000-)	Brake Assy, Drum, Mech, 07.9d [6600]]	2
▲		66211	(000000-)	Shoe Set, Brake [1 Set=1pkg=2 Shoes]	2
▲▽		66213	(000000-)	Brake Kit, Repair	1
▲▲		70161	(000000-)	Shaft	1
▲		70158	(000000-)	Spring	2
▽	2	1061961	(000000-)	Tire Assy, Solid, 20.8 X 5.0, W/ Brg	2
▲	3	51338	(000000-)	Bearing, Cup, 2.56d 0.55w	2
	4	32485	(000000-)	Washer, Flat, 0.38, Sae	2
	5	51339	(000000-)	Bearing, Cone, 1.38b 0.71w	4
	6	32598	(000000-)	Washer, Flat, 1.02b 1.75d .12, Stl	2
	7	14242	(000000-)	Nut, Hex, Sltd, 1.00-20	2
	8	08202	(000000-)	Pin, Cotter, .125 X 1.75	2
	9	54390	(000000-)	Cap, Hub, Dust, 2.57d 0.77l	2
	10	06969	(000000-)	Screw, Hex, M12 X 1.75 X 40, 8.8	12
	11	32486	(000000-)	Washer, Flat, 0.50, Sae	24
	12	08711	(000000-)	Nut, Hex, Lock, M12 X 1.75, Nl	12
	13	71373	(000000-)	Clevis Wldt, Adj, .50pin 0.50-20, Pl	1
	14	374710	(000000-)	Clevis, Adj, 0.38pin, 0.50-20thd	1
	15	58078	(000000-)	Pin, Clevis, 0.50d X 1.25l	1
	16	08182	(000000-)	Pin, Cotter, .125 X 1.00	2
	17	86240	(000000-)	Pin, Clevis, 0.38d X 1.13l	1
	18	48985	(000000-)	Nut, Hex, Jam, .50-20	1
	19	1034462	(000000-)	Cable, Brake	1
	20	1034455	(000000-)	Cable, Brake	1
	21	40352	(000000-)	Turnbuckle, Body, .38thread, 03.9l	1
	22	32522	(000000-)	Nut, Hex, Jam, .38-16	1
	23	39562	(000000-)	Nut, Hex, Jam, .38-16, Lh	1
	24	09088	(000000-)	Pin, Clevis, 0.37d X 1.00l	2
	25	39005	(000000-)	Pin, Cotter, .094 X 0.75	2
	26	54400	(000000-)	Bracket, Angle, Keeper, Cable	4
	27	1037355	(000000-)	Screw, Hex, M8 X 1.25 X 35, 9.8, Sems	4
	28	222460	(000000-)	Sleeve, P/M, 0.31b 0.50d 0.5l [430ss]	4
	29	369781	(000000-)	Pulley, Cable, 1.5d Nyl	5

Fig. 46 - Wheel and Brakes Group, Front Pneumatic (Option)

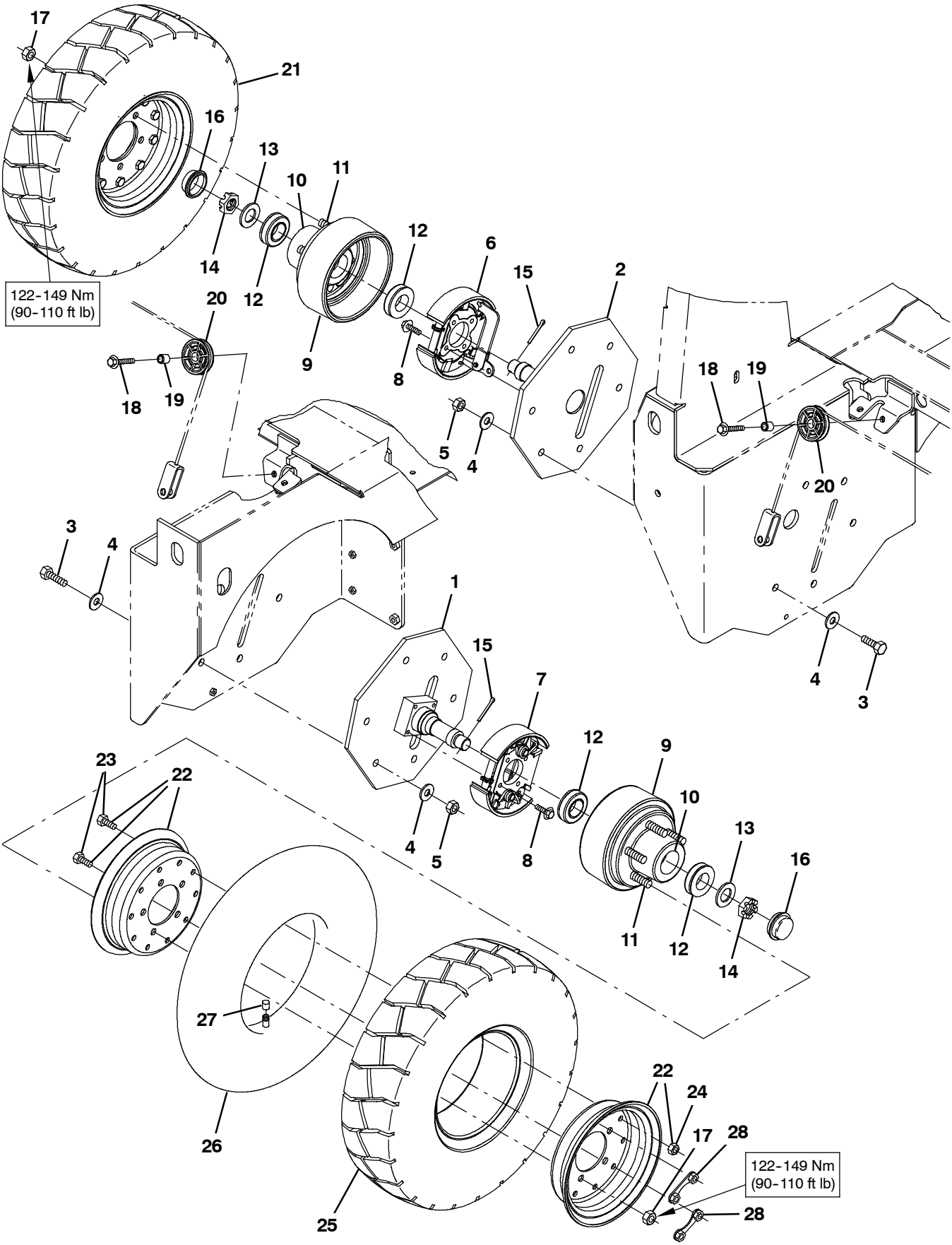

354687

Fig. 46 - Wheel and Brakes Group, Front Pneumatic (Option)

	Ref.	Part No.	Serial Number	Description	Qty.
	1	1028159	(000000-)	Spindle Wldt, Wheel, Front, Lh	1
	2	1028146	(000000-)	Spindle Wldt, Wheel, Front, Rh	1
	3	06969	(000000-)	Screw, Hex, M12 X 1.75 X 40, 8.8	12
	4	32486	(000000-)	Washer, Flat, 0.50, Sae	24
	5	08711	(000000-)	Nut, Hex, Lock, M12 X 1.75, Nl	12
▽	6	1026856	(000000-)	Brake, Knot, Rh, 7.0d	1
▲		9004865	(000000-)	Shoe Assy, Brake, 177.8 X 45	2
▲		9004867	(000000-)	Lever Assy, 177.8 X 45	1
▲		9004868	(000000-)	Spring, Tens, Brake	1
▲		9004870	(000000-)	Spring, Tors, 0.61id .18wir 02.0coil	1
▲		9004871	(000000-)	Adjuster Kit, Manual, W/ Pivot	1
▲		9004869	(000000-)	Spring, Tors, 0.61id .18wir 02.0coil	1
▲		9004873	(000000-)	Clip, Spring	2
▽	7	1026841	(000000-)	Brake, Knot, Lh, 7.0d	1
▲		9004865	(000000-)	Shoe Assy, Brake, 177.8 X 45	2
▲		9004867	(000000-)	Lever Assy, 177.8 X 45	1
▲		9004868	(000000-)	Spring, Tens, Brake	1
▲		9004870	(000000-)	Spring, Tors, 0.61id .18wir 02.0coil	1
▲		9004871	(000000-)	Adjuster Kit, Manual, W/ Pivot	1
▲		9004869	(000000-)	Spring, Tors, 0.61id .18wir 02.0coil	1
▲		9004873	(000000-)	Clip, Spring	2
	8	1037354	(000000-)	Screw, Hex, M8 X 1.25 X 30, 9.8, Sems	8
▽	9	1036027	(000000-)	Drum Assy, Brake	2
▲	10	51338	(000000-)	Bearing, Cup, 2.56d 0.55w	2
▲	11	67665	(000000-)	Stud, Wheel, .50-20 X 1.88l, 0.560th	5
	12	51339	(000000-)	Bearing, Cone, 1.38b 0.71w	4
	13	32598	(000000-)	Washer, Flat, 1.02b 1.75d .12, Stl	2
	14	14242	(000000-)	Nut, Hex, Sltd, 1.00-20	2
	15	08202	(000000-)	Pin, Cotter, .125 X 1.75	2
	16	54390	(000000-)	Cap, Hub, Dust, 2.57d 0.77l	2
	17	24339	(000000-)	Nut, Wheel, .50-20 X 60 Angle	10
	18	1037355	(000000-)	Screw, Hex, M8 X 1.25 X 35, 9.8, Sems	2
	19	222460	(000000-)	Sleeve, P/M, 0.31b 0.50d 0.5l [430ss]	2
	20	369781	(000000-)	Pulley, Cable, 1.5d Nyl	2
▽	21	1032515	(000000-)	Tire Assy, Pneu, 21 X 6.0-12 4.5bc, Ce	2
▲▽	22	1039523	(000000-)	Rim Assy, 09.0 X 4.0, 4.5bc /5bolt	1
▲▲	23	370181	(000000-)	Screw, Hex, M10 X 1.50 X 25, 10.9	10
▲▲	24	41430	(000000-)	Nut, Hex, Lock, M10 X 1.5, Nl	6
▲	25	1039520	(000000-)	Tire, Pneu, 21 X 6.0 X 9.0 12 Ply [Ic40]	1
▲	26	1039517	(000000-)	Innertube, 6.00 X 9.00 [Js-2]	1
▲	27	45786	(000000-)	Cap, Valve, Tire, Tubeless [Schrader]	1
▲	28	1032488	(000000-)	Plate, Wheel, Ce	2

Fig. 47 - Brake Pedal and Parking Brake Group

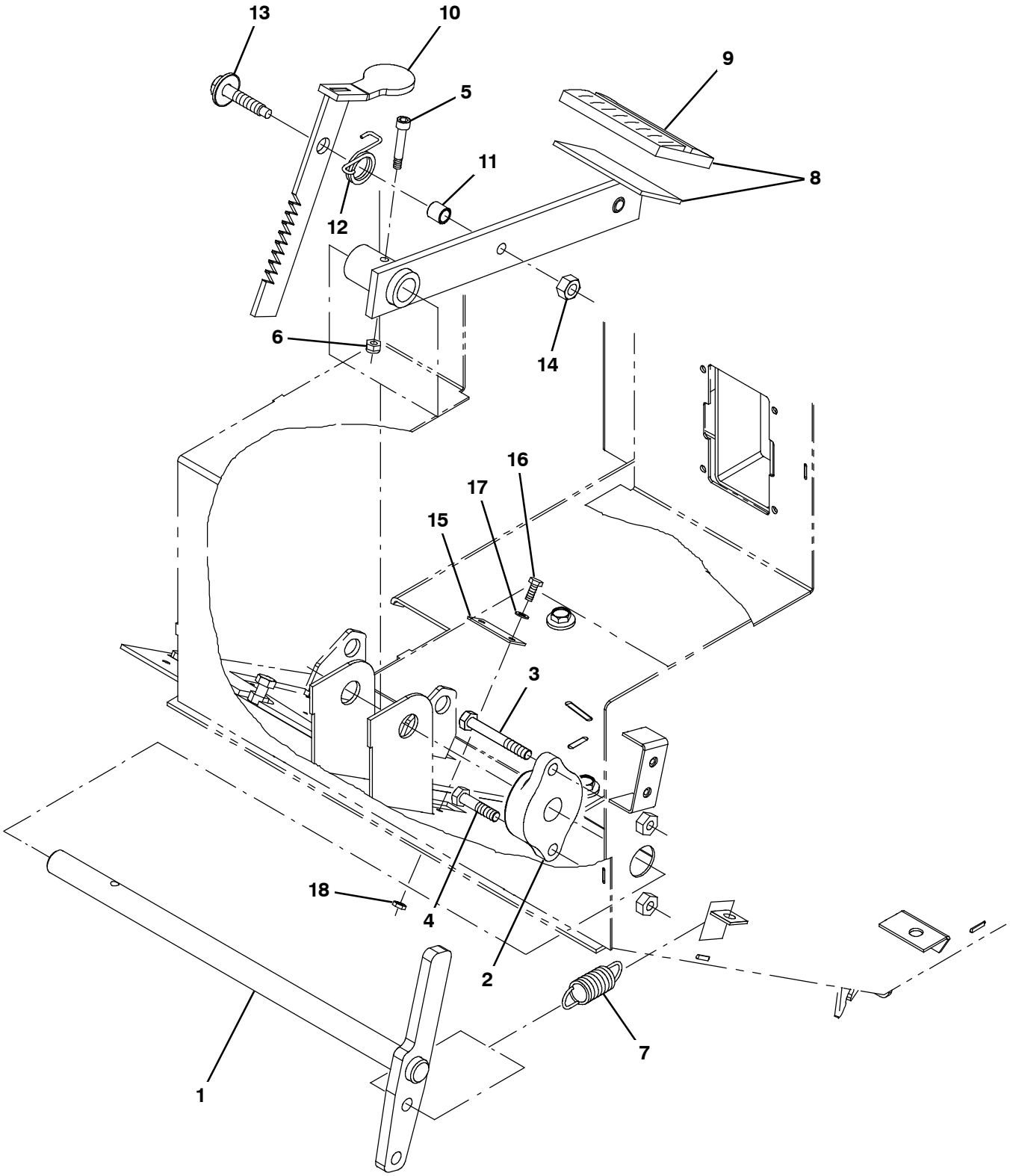

354688

Fig. 47 - Brake Pedal and Parking Brake Group

	Ref.	Part No.	Serial Number	Description	Qty.
	1	1026605	(000000-)	Rod Wldt, Brake	1
	2	26663	(000000-)	Bearing, Flng, 2hole, 0.75b	1
	3	363976	(000000-)	Screw, Hex, M8 X 1.25 X 60, 8.8, Fl	1
	4	39277	(000000-)	Screw, Hex, M8 X 1.25 X 25, 8.8	1
	5	31249	(000000-)	Bolt, Shld, .25d X 1.25, #10-24	1
	6	45181	(000000-)	Nut, Hex, Lock, #10-24, Nl	1
	7	87816	(000000-)	Spring, Extn, 0.75od 0.09wir 02.5l	1
▽	8	1026610	(000000-)	Pedal Wldt, Brake	1
▲	9	51109	(000000-)	Pad, Pedal, Brake, 3.96l 2.36w 0.75	1
	10	1042021	(000000-)	Brake Wldt, Parking	1
	11	46563	(000000-)	Bushing, Sleeve, 0.37b 0.50d 0.50l, Oib	1
	12	59009	(000000-)	Spring, Tors, 0.75id .06wir 02.8coil	1
	13	06955	(000000-)	Screw, Hex, M8 X 1.25 X 35, 8.8	1
	14	08709	(000000-)	Nut, Hex, Lock, M8 X 1.25, Nl	1
	15	1042024	(000000-)	Plate, Stop, Parking	1
	16	33928	(000000-)	Screw, Hex, M4 X 0.70 X 20, Ss	2
	17	19065	(000000-)	Washer, Flat, 08	2
	18	33932	(000000-)	Nut, Hex, Lock, M4 X 0.70, Nl, Ss	2

Fig. 48 - Directional Pedal Group

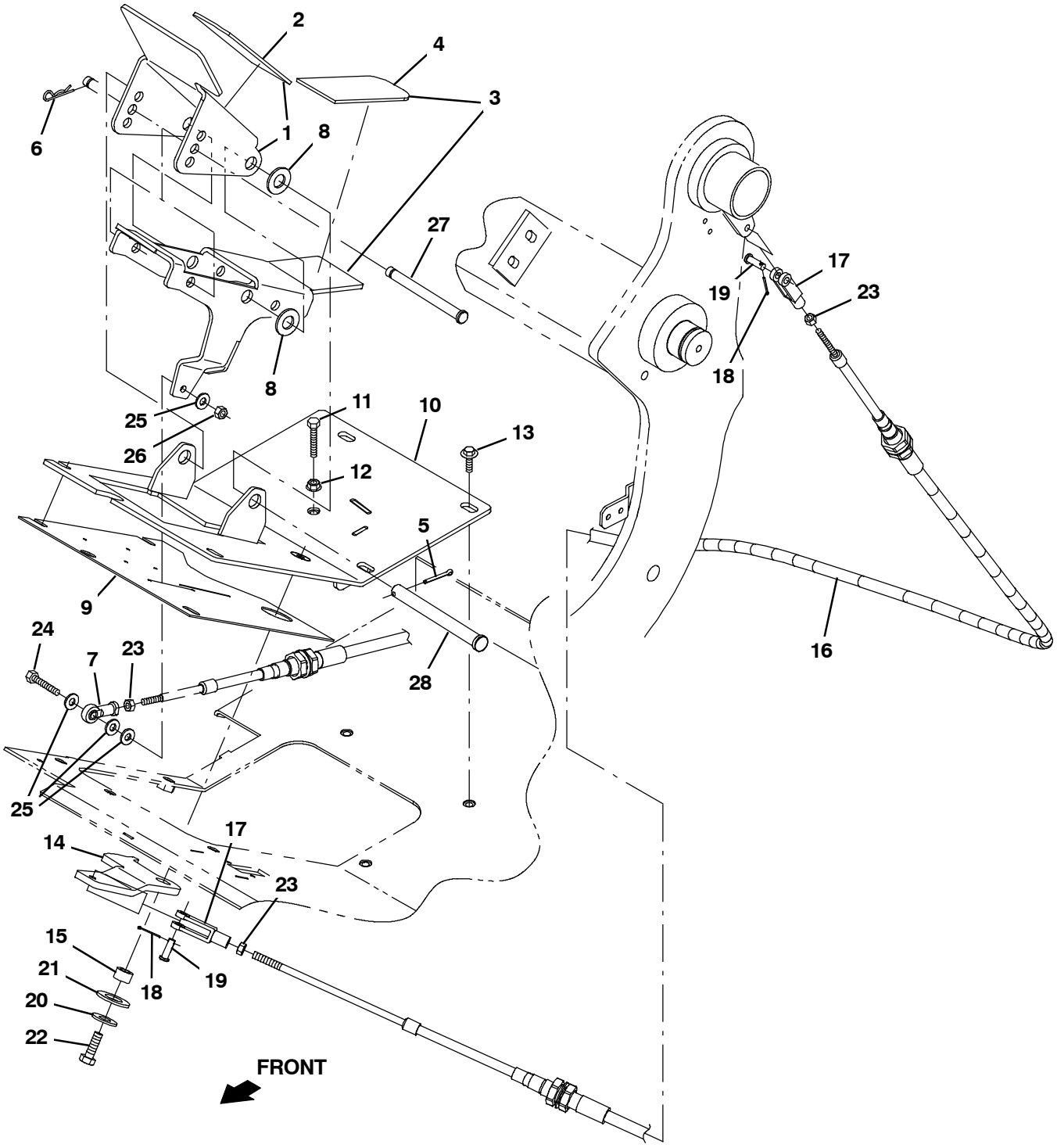

354718

Fig. 48 - Directional Pedal Group

	Ref.	Part No.	Serial Number	Description	Qty.
▽	1	9004575	(000000-)	Pedal, Propel, Upper, W/Tread	1
▲	2	82839	(000000-)	Tread, Non-Skid, 02.2w 11.5l	1
▽	3	9004574	(000000-)	Pedal, Propel, Lower, W/Tread	1
▲	4	82839	(000000-)	Tread, Non-Skid, 02.2w 11.5l	1
	5	08182	(000000-)	Pin, Cotter, .125 X 1.00	1
	6	86866	(000000-)	Pin, Cotter, Hair, 0.38d .072 Wir	1
	7	1033995	(000000-)	Rod-End, M6 X 1.0rh Fem 6mmb [Nylon]	2
	8	32486	(000000-)	Washer, Flat, 0.50, Sae	2
	9	1038360	(000000-)	Gasket, Rbr, Pedal, Propel	1
	10	1026688	(000000-)	Panel Wldt, Access	1
	11	76570	(000000-)	Screw, Hex, M8 X 1.25 X 30, 8.8	1
	12	07791	(000000-)	Nut, Hex, Flng, M8 X 1.25	1
	13	1037346	(000000-)	Screw, Hex, M8 X 1.25 X 25, 9.8, Sems	6
	14	1034910	(000000-)	Link, Crank, Limiter	1
	15	1040761	(000000-)	Bushing, Sleeve, 0.31b 0.55d 0.38l, Oib	1
	16	1035620	(000000-)	Cable, Push / Pull, 070.4l M6x1.0/M6x1.0	1
	17	1035826	(000000-)	Clevis, Adj, M6 Pin, M6 X 1.0 Rh, Pl	2
	18	08178	(000000-)	Pin, Cotter, .062 X 0.75	2
	19	14605	(000000-)	Pin, Clevis, 0.25d X 0.75l	2
	20	32492	(000000-)	Washer, Flat, 0.38, Std	1
	21	15331	(000000-)	Washer, Flat, 0.62, Sae	1
	22	09010	(000000-)	Screw, Hex, M8 X 1.25 X 25, Ss	1
	23	41359	(000000-)	Nut, Hex, Std, M6 X 1.00, 8	3
	24	09007	(000000-)	Screw, Hex, M6 X 1.00 X 25, Ss	1
	25	01684	(000000-)	Washer, Flat, 0.27b 0.69d .05, Ss	4
	26	08712	(000000-)	Nut, Hex, Lock, M6 X 1.00, Nl, Ss	1
	27	1040162	(000000-)	Pin, Clevis, 0.37d X 4.33l	1
	28	51538	(000000-)	Pin, Clevis, 0.50d X 5.00l	1

Fig. 49 - Hydraulic Pump Linkage Group, S30 and XP

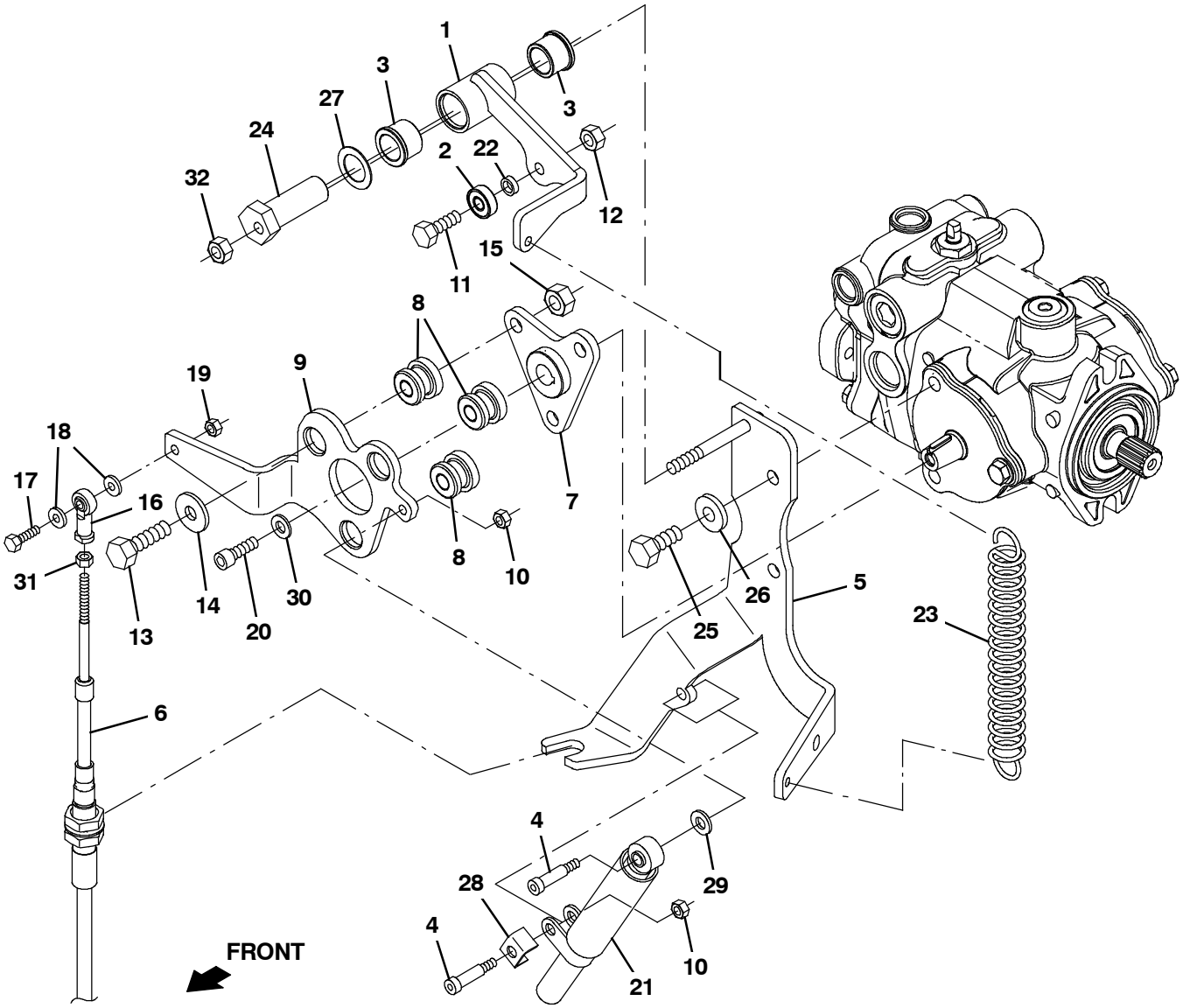

354713

Fig. 49 - Hydraulic Pump Linkage Group, S30 and XP

Ref.	Part No.	Serial Number	Description	Qty.
1	1031921	(000000-)	Arm Wldt, Neutral	1
2	1027651	(000000-)	Bearing, Ball, 8mmb X 22mmd X 7mmw	1
3	1028246	(000000-)	Bearing, Flng, 0.75b 1.00d 0.75l, Bnz	2
4	16213	(000000-)	Bolt, Shld, .31d X 1.00, .25-20	2
5	1034133	(000000-005699)	Bracket Wldt, Linkage, Propel	1
5	1072476	(005700-)	Bracket Wldt, Linkage, Propel [Mits]	1
6	1035619	(000000-)	Cable, Push / Pull, 062.5l M6x1.0/M6x1.0	1
7	1031939	(000000-)	Hub Wldt	1
8	59649	(000000-)	Isolator, Vib, Bshg, 1.1d 0.6l .4b 0.78h	3
9	1034244	(000000-)	Lever, Pump	1
10	75934	(000000-)	Nut, Hex, Lock, .25-20, Nl	2
11	76570	(000000-)	Screw, Hex, M8 X 1.25 X 30, 8.8	1
12	08709	(000000-)	Nut, Hex, Lock, M8 X 1.25, Nl	1
13	39284	(000000-)	Screw, Hex, M10 X 1.50 X 35, 8.8	3
14	13248	(000000-)	Washer, Flat, 0.40b 1.12d .12, Stl, Pl	3
15	41430	(000000-)	Nut, Hex, Lock, M10 X 1.5, Nl	3
16	1033995	(000000-)	Rod-End, M6 X 1.0rh Fem 6mmb [Nylon]	1
17	06945	(000000-)	Screw, Hex, M6 X 1.00 X 30, 8.8	1
18	32483	(000000-)	Washer, Flat, 0.25, Sae	2
19	08708	(000000-)	Nut, Hex, Lock, M6 X 1.00, Nl	1
20	1033237	(000000-)	Screw, Soc, .31-24 X 1.00, Al	1
21	73411	(000000-)	Shock Absorber, 2.3 Strk	1
22	1027531	(000000-)	Spacer, 0.33b 0.50d 0.15l, Pl	1
23	222236	(000000-)	Spring, Extn, 1.00od 0.12wir 05.0l	1
24	1027533	(000000-)	Pin, Pivot, 0.75d 02.1l, Int 0.33b	1
25	21198	(000000-)	Screw, Hex, .38-16 X 1.25, G5	2
26	32491	(000000-)	Washer, Flat, 0.31, Std	2
27	64489	(000000-)	Washer, Flat, 0.81b 1.24d .03, Stl, Pl	1
28	84170	(000000-)	Bracket, Retainer, Safety	1
29	39349	(000000-)	Washer, Flat, 0.31, Sae	1
30	41186	(000000-)	Washer, Flat, Belleville, .31	1
31	41359	(000000-)	Nut, Hex, Std, M6 X 1.00, 8	1
32	08709	(000000-)	Nut, Hex, Lock, M8 X 1.25, Nl	1

Fig. 50 - Hopper Group, Plastic

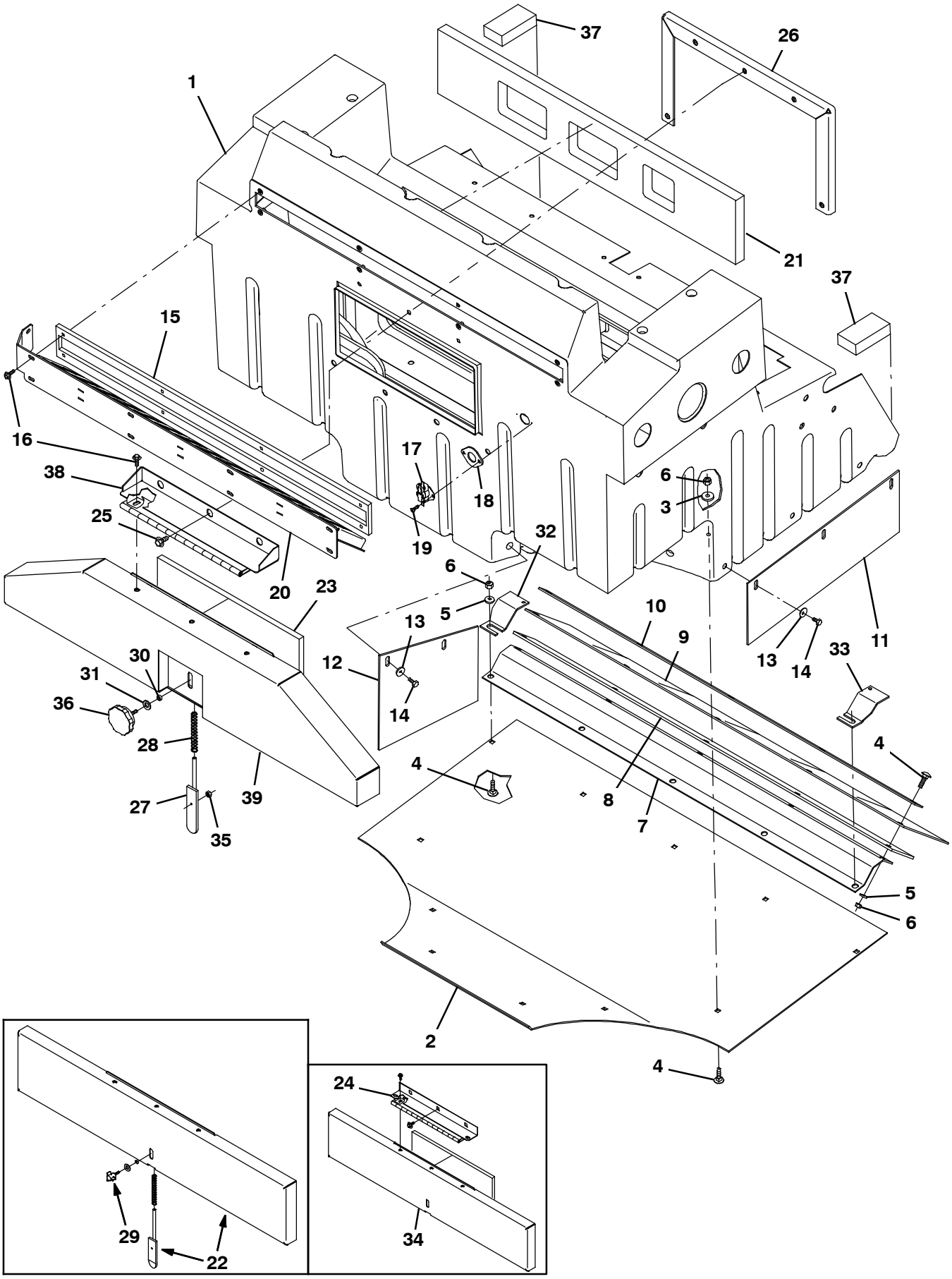

354689

Fig. 50 - Hopper Group, Plastic

	Ref.	Part No.	Serial Number	Description	Qty.
	1	1034614	(000000-)	Hopper, Plstc, Trimmed	1
	2	1032821	(000000-)	Plate, Sppt, Hppr Bottom	1
	3	1017218	(000000-)	Washer, Flat, 0.32b 1.00d .12, Ss	6
▽		9004077	(000000-)	Skirt Kit, Hppr, Maint [S30]	1
▲	4	1035684	(000000-)	Bolt, Carriage, M8 X 1.25 X 30	16
▲	5	32491	(000000-)	Washer, Flat, 0.31, Std	10
▲	6	08713	(000000-)	Nut, Hex, Lock, M8 X 1.25, Nl, Ss	16
▲	7	1034168	(000000-)	Bracket, Sppt, Hppr Seal	1
▲	8	1045357	(000000-)	Skirt, Lip	1
▲	9	1045359	(000000-)	Skirt, Lip, Hppr	1
▲	10	1026798	(000000-)	Strap, Main, Lip	1
▲	11	1038037	(000000-)	Skirt, Hppr	1
▲	12	1038353	(000000-)	Skirt, Neo, .12, 06.65w 18.50l, 03/ Sl	1
▲	13	41178	(000000-)	Washer, Flat, 0.25, Fendr	5
▲	14	11635	(000000-)	Screw, Hex, M6 X 1.00 X 12, Nl, Ss	5
	15	1036519	(000000-)	Seal, Perma-Filter	1
	16	1040467	(000000-)	Screw, Hex, M6 X 1.0 X 20, 9.8, Sems	11
	17	367679	(000000-)	Switch, Thermal, 160deg, Spdt	1
	18	82733	(000000-)	Gasket, Sensor, Thermal	1
	19	360943	(000000-)	Screw, Pan, Phl, 10-14 X 0.75, F/ Plstc	2
	20	1041967	(000000-)	Plate Wldt, Perma-Filter	1
	21	1037099	(000000-)	Seal, Inlet, Pre-Filter	1
	22	9004815	(000000-001304)	Latch Kit, Door, Access, Ci [S30]	1
	23	1035660	(000000-)	Seal, Foam, .50 7.47w 15.47l, Ure, Adh	1
	24	1032545	(000000-002099)	Hinge Wldt	1
	25	1037346	(000000-)	Screw, Hex, M8 X 1.25 X 25, 9.8, Sems	5
	26	1044939	(000000-)	Bracket, Support, Hinge	1
	27	1047418	(001305-)	Latch Wldt, Bolt	1
	28	626081	(000000-)	Spring, Cmpr, 0.48od .04wir 03.5l	1
	29	397225	(000000-001304)	Knob Assy, Star, 1.12d 3ear M06x1.0 0.8l	1
	30	80491	(000000-)	Sleeve, P/M, 0.25b 0.38d 0.2l [430ss]	1
	31	43611	(000000-)	Washer, Flat, 0.39b 0.75d .06, Nyl	1
	32	1044764	(000000-)	Bracket, Seal, Rh	1
	33	1044768	(000000-)	Bracket, Seal, Lh	1
	34	1047420	(001305-002099)	Door Wldt	1
	35	08708	(001305-)	Nut, Hex, Lock, M6 X 1.00, Nl	1
	36	1047543	(001305-)	Knob, Rnd, 2.38d 0.88l M6 X 1.0, Plstc	1
	37	1049158	(000000-)	Seal, Hppr	2
	38	1059223	(002100-)	Hinge Wldt, Hppr	1
	39	1058092	(002100-)	Door Wldt, Hppr	1

Fig. 51 - Hopper Group, Steel

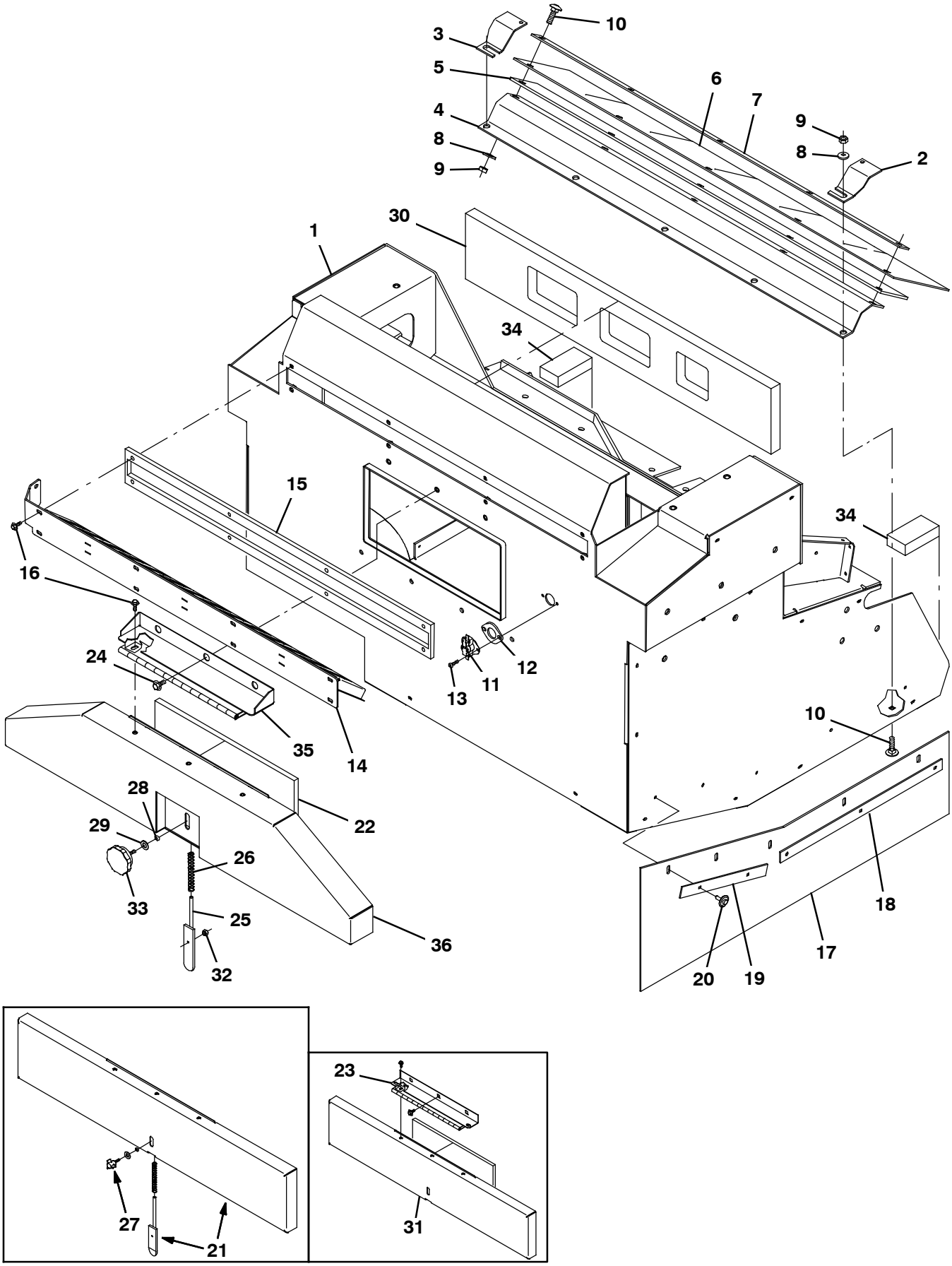

354690

Fig. 51 - Hopper Group, Steel

Ref.	Part No.	Serial Number	Description	Qty.
1	1026681	(000000-)	Hopper Wldt, Stl, Rear Dump	1
2	1044768	(000000-)	Bracket, Seal, Lh	1
3	1044764	(000000-)	Bracket, Seal, Rh	1
4	1034168	(000000-)	Bracket, Sppt, Hppr Seal	1
5	1045357	(000000-)	Skirt, Lip	1
6	1040590	(000000-)	Skirt, Lip, Hppr, Stl	1
7	1026798	(000000-)	Strap, Main, Lip	1
8	32491	(000000-)	Washer, Flat, 0.31, Std	10
9	08713	(000000-)	Nut, Hex, Lock, M8 X 1.25, Nl, Ss	10
10	1035684	(000000-)	Bolt, Carriage, M8 X 1.25 X 30	10
11	367679	(000000-)	Switch, Thermal, 160deg, Spdt	1
12	82733	(000000-)	Gasket, Sensor, Thermal	1
13	24265	(000000-)	Screw, Pan, Phl, M4 X 0.70 X 16, Ss	2
14	1041967	(000000-)	Plate Wldt, Perma-Filter	1
15	1036519	(000000-)	Seal, Perma-Filter	1
16	1040467	(000000-)	Screw, Hex, M6 X 1.0 X 20, 9.8, Sems	11
17	1040276	(000000-)	Skirt, Deflector	1
18	1040400	(000000-)	Retainer, Skirt	1
19	1040408	(000000-)	Retainer, Skirt	1
20	72968	(000000-)	Rivet, Plstc, .250d X 0.90	5
21	9004815	(000000-001304)	Latch Kit, Door, Access, Ci [S30]	1
22	1035660	(000000-)	Seal, Foam, .50 7.47w 15.47l, Ure, Adh	1
23	1032545	(000000-002099)	Hinge Wldt	1
24	1037346	(000000-)	Screw, Hex, M8 X 1.25 X 25, 9.8, Sems	6
25	1047418	(001305-)	Latch Wldt, Bolt	1
26	626081	(000000-)	Spring, Cmpr, 0.48od .04wir 03.5l	1
27	397225	(000000-001304)	Knob Assy, Star, 1.12d 3ear M06x1.0 0.8l	1
28	80491	(000000-)	Sleeve, P/M, 0.25b 0.38d 0.2l [430ss]	1
29	43611	(000000-)	Washer, Flat, 0.39b 0.75d .06, Nyl	1
30	1037099	(000000-)	Seal, Inlet, Pre-Filter	1
31	1047420	(001305-002099)	Door Wldt	1
32	08708	(001305-)	Nut, Hex, Lock, M6 X 1.00, Nl	1
33	1047543	(001305-)	Knob, Rnd, 2.38d 0.88l M6 X 1.0, Plstc	1
34	1049158	(000000-)	Seal, Hppr	2
35	1059223	(002100-)	Hinge Wldt, Hppr	1
36	1058092	(002100-)	Door Wldt, Hppr	1

Fig. 52 - Hopper Cylinder and Dump Door Group, Plastic

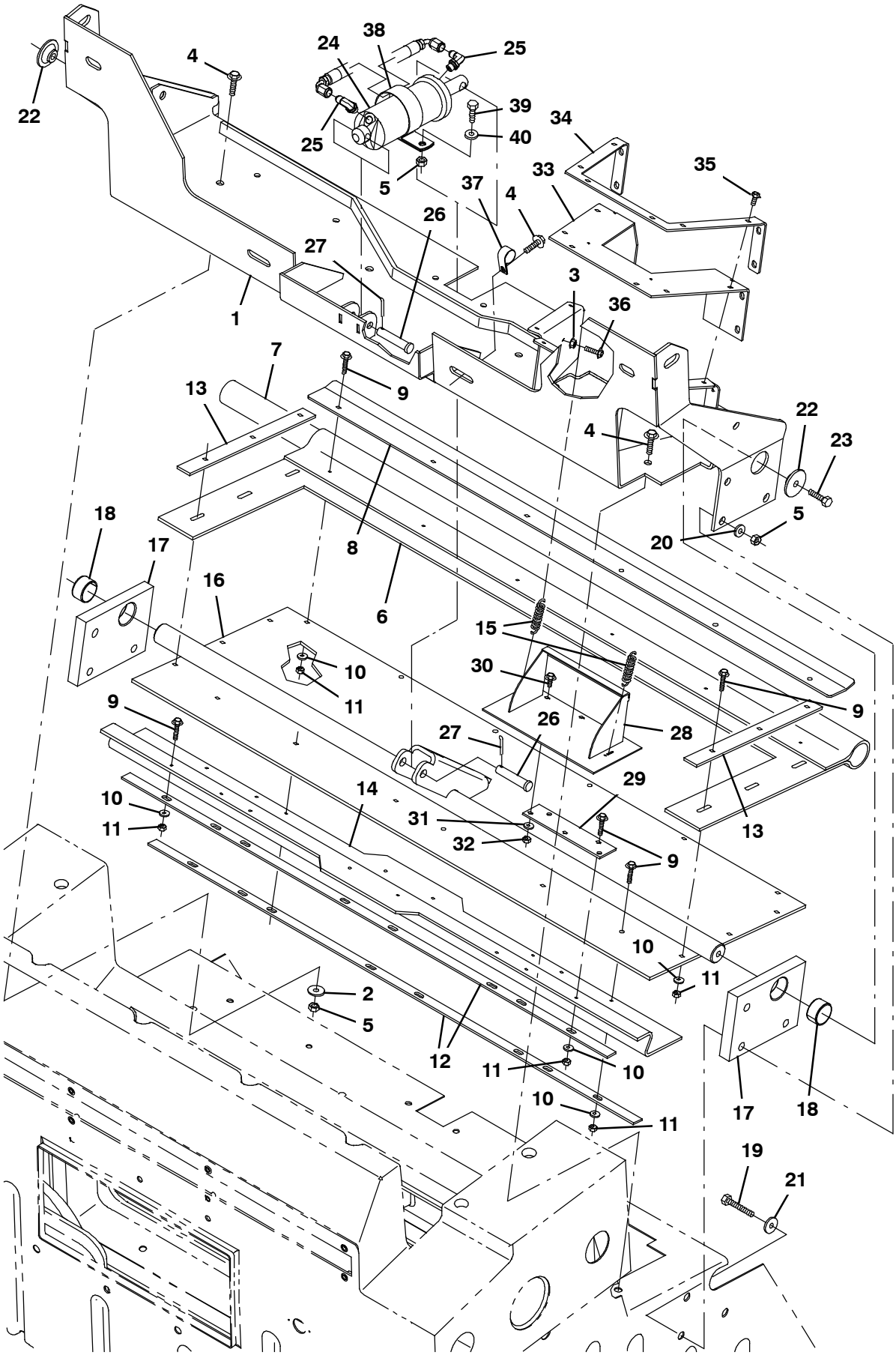

354691

Fig. 52 - Hopper Cylinder and Dump Door Group, Plastic

	Ref.	Part No.	Serial Number	Description	Qty.
	1	1039907	(000000-)	Panel Wldt, Mtg, Door	1
	2	1017218	(000000-)	Washer, Flat, 0.32b 1.00d .12, Ss	5
	3	07790	(000000-)	Nut, Hex, Flng, M6 X 1.00	2
	4	1037354	(000000-)	Screw, Hex, M8 X 1.25 X 30, 9.8, Sems	5
	5	08713	(000000-)	Nut, Hex, Lock, M8 X 1.25, Nl, Ss	12
▽		9004078	(000000-)	Skirt Kit, Door, Hppr, Maint [S30]	1
▲	6	1044420	(000000-)	Seal, Door, Dump	1
▲	7	1030218	(000000-)	Cord, Sponge	1
▲	8	1044419	(000000-)	Plate, Retainer, Door, Dump	1
▲	9	1037345	(000000-)	Screw, Hex, M6 X 1.00 X 30, 9.8, Sems	24
▲	10	32490	(000000-)	Washer, Flat, 0.25, Std	24
▲	11	08712	(000000-)	Nut, Hex, Lock, M6 X 1.00, Nl, Ss	24
▲	12	1048891	(000000-)	Plate, Seal, Retainer	2
▲	13	1044950	(000000-)	Strap, Door, Dump, Side	2
▲	14	1026879	(000000-)	Seal, Wiper, Door	1
	15	75575	(000000-)	Spring, Extn, 0.50od 0.06wir 02.5l	2
	16	1026755	(000000-)	Door Wldt, Hppr	1
	17	1037335	(000000-)	Housing, Brg, Pivot, Door	2
	18	1040759	(000000-)	Bearing, Journal-1.25 I.D. X .75 Lg	2
	19	16930	(000000-)	Screw, Hex, M10 X 1.50 X 50, 8.8	6
	20	32492	(000000-)	Washer, Flat, 0.38, Std	6
	21	1017218	(000000-)	Washer, Flat, 0.32b 1.00d .12, Ss	6
	22	1044095	(000000-)	Spacer, Sppt	2
	23	09011	(000000-)	Screw, Hex, M8 X 1.25 X 30, Ss	2
	24	1038176	(000000-)	Cylinder, Hyd, 2.0b 08.0l 04.00strk 2500	1
	25	77097	(000000-002999)	Fitting, Hyd, E90, Jm04/Om04	2
	25	762427	(003000-)	Fitting, Hyd, E90, Fm04/Om04	2
	26	630448	(000000-)	Pin, Clevis, 0.50d X 2.25l	2
	27	08236	(000000-)	Pin, Cotter, .156 X 1.25	2
	28	1039883	(000000-)	Door Wldt, Dust	1
	29	1039916	(000000-)	Hinge, Rbr	1
	30	1040467	(000000-)	Screw, Hex, M6 X 1.0 X 20, 9.8, Sems	3
	31	32490	(000000-)	Washer, Flat, 0.25, Std	3
	32	08712	(000000-)	Nut, Hex, Lock, M6 X 1.00, Nl, Ss	3
	33	1047073	(000000-)	Gasket, Rbr, Dust Chute	1
	34	1047096	(000000-)	Bracket, Seal, Chute	1
	35	222158	(000000-)	Screw, Hex, M6 X 1.00 X 10, Fmg	10
	36	222159	(000000-)	Screw, Hex, M6 X 1.00 X 25, Fmg	2
	37	53468	(000000-)	Clamp, Cable, Stl, 1.75d X 1.00w, 1hole	1
	38	70157	(000000-)	Clamp, Cable, Ss, 2.50d X 1.00w, 1hole	1
	39	09010	(000000-)	Screw, Hex, M8 X 1.25 X 25, Ss	1
	40	32491	(000000-)	Washer, Flat, 0.31, Std	1

Fig. 53 - Hopper Cylinder and Dump Door Group, Steel

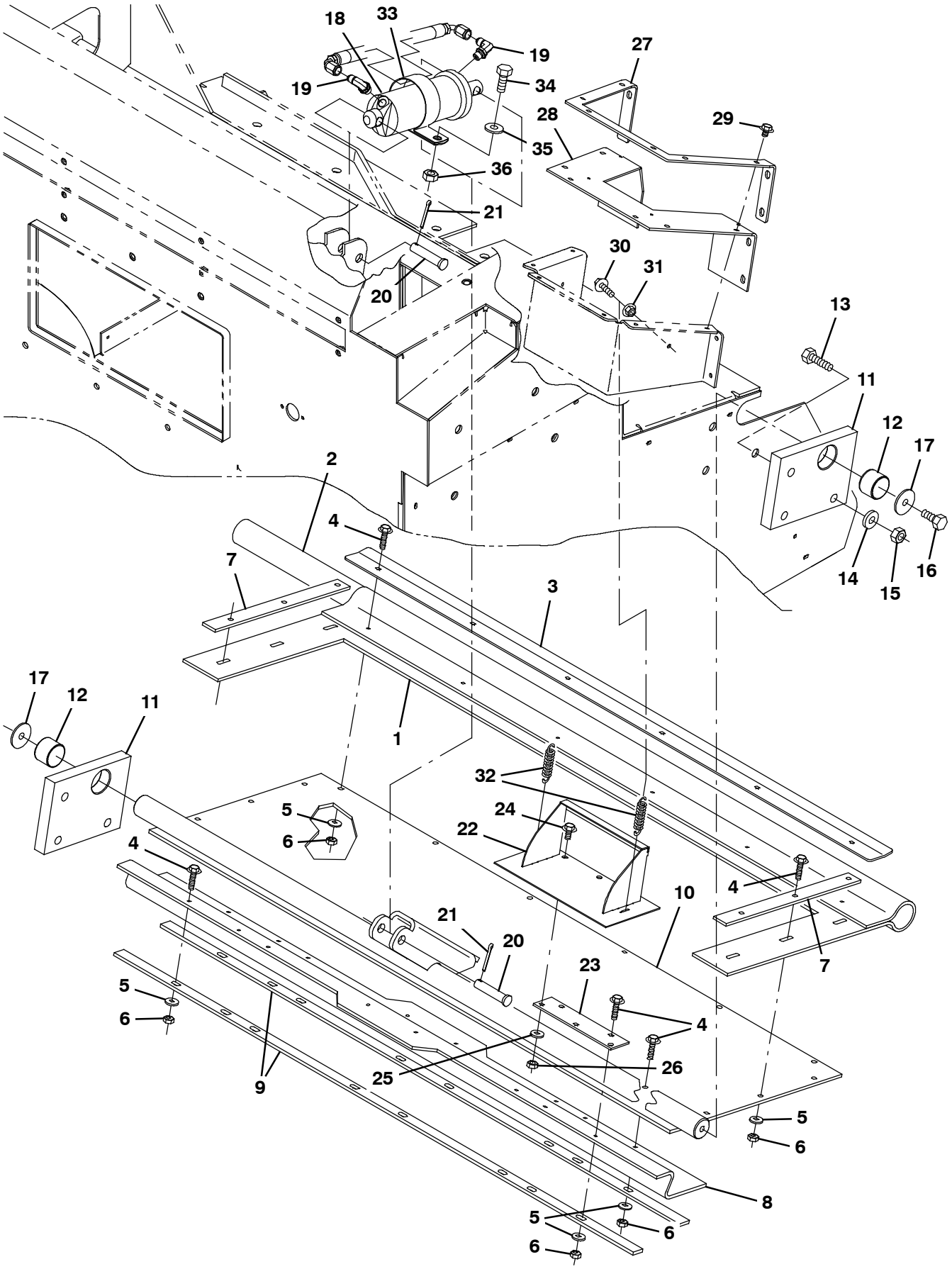

354692

Fig. 53 - Hopper Cylinder and Dump Door Group, Steel

	Ref.	Part No.	Serial Number	Description	Qty.
▽		9004078	(000000-)	Skirt Kit, Door, Hppr, Maint [S30]	1
▲	1	1044420	(000000-)	Seal, Door, Dump	1
▲	2	1030218	(000000-)	Cord, Sponge	1
▲	3	1044419	(000000-)	Plate, Retainer, Door, Dump	1
▲	4	1037345	(000000-)	Screw, Hex, M6 X 1.00 X 30, 9.8, Sems	24
▲	5	32490	(000000-)	Washer, Flat, 0.25, Std	24
▲	6	08712	(000000-)	Nut, Hex, Lock, M6 X 1.00, Nl, Ss	24
▲	7	1044950	(000000-)	Strap, Door, Dump, Side	2
▲	8	1026879	(000000-)	Seal, Wiper, Door	1
▲	9	1048891	(000000-)	Plate, Seal, Retainer	2
	10	1026755	(000000-)	Door Wldt, Hppr	1
	11	1037335	(000000-)	Housing, Brg, Pivot, Door	2
	12	1040759	(000000-)	Bearing, Journal-1.25 I.D. X .75 Lg	2
	13	06962	(000000-)	Screw, Hex, M10 X 1.50 X 45, 8.8	6
	14	32492	(000000-)	Washer, Flat, 0.38, Std	6
	15	41430	(000000-)	Nut, Hex, Lock, M10 X 1.5, Nl	6
	16	15675	(000000-)	Screw, Hex, M8 X 1.25 X 16, Ss	2
	17	379829	(000000-)	Washer, Flat, 0.34b 1.50d .12, Stl, Pl	2
	18	1038176	(000000-)	Cylinder, Hyd, 2.0b 08.0l 04.00strk 2500	1
	19	77097	(000000-002999)	Fitting, Hyd, E90, Jm04/Om04	2
	19	762427	(003000-)	Fitting, Hyd, E90, Fm04/Om04	2
	20	630448	(000000-)	Pin, Clevis, 0.50d X 2.25l	2
	21	08236	(000000-)	Pin, Cotter, .156 X 1.25	2
	22	1039883	(000000-)	Door Wldt, Dust	1
	23	1039916	(000000-)	Hinge, Rbr	1
	24	1040467	(000000-)	Screw, Hex, M6 X 1.0 X 20, 9.8, Sems	3
	25	32483	(000000-)	Washer, Flat, 0.25, Sae	3
	26	08712	(000000-)	Nut, Hex, Lock, M6 X 1.00, Nl, Ss	3
	27	1047096	(000000-)	Bracket, Seal, Chute	1
	28	1047073	(000000-)	Gasket, Rbr, Dust Chute	1
	29	361339	(000000-)	Screw, Hex, M6 X 1.00 X 16, Fmg	10
	30	222159	(000000-)	Screw, Hex, M6 X 1.00 X 25, Fmg	2
	31	07790	(000000-)	Nut, Hex, Flng, M6 X 1.00	2
	32	75575	(000000-)	Spring, Extn, 0.50od 0.06wir 02.5l	2
	33	70157	(000000-)	Clamp, Cable, Ss, 2.50d X 1.00w, 1hole	1
	34	09010	(000000-)	Screw, Hex, M8 X 1.25 X 25, Ss	1
	35	32491	(000000-)	Washer, Flat, 0.31, Std	1
	36	08713	(000000-)	Nut, Hex, Lock, M8 X 1.25, Nl, Ss	1

Fig. 54 - Hopper Cover Group (000000-002099)

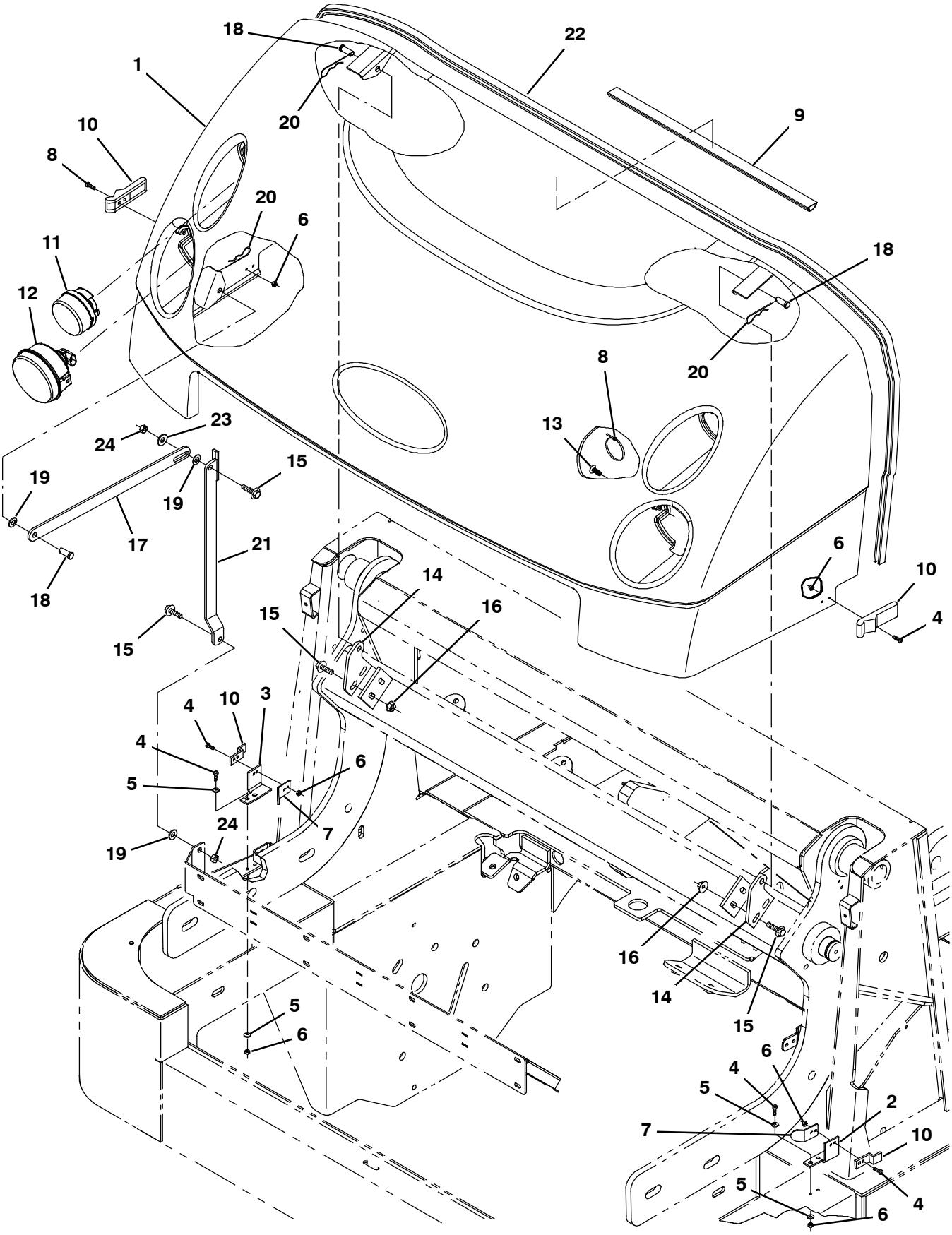

354693

Fig. 54 - Hopper Cover Group (000000-002099)

	Ref.	Part No.	Serial Number	Description	Qty.
	1	1040118	(000000-002099)	Cover Assy, Hppr	1
	2	1039971	(000000-002099)	Bracket, Latch, Rh	1
	3	1039999	(000000-002099)	Bracket, Latch, Lh	1
	4	06927	(000000-002099)	Screw, Pan, Phl, M4 X 0.70 X 16, 4.8	8
	5	19065	(000000-002099)	Washer, Flat, 08	8
	6	02850	(000000-002099)	Nut, Hex, Lock, M4 X 0.70, Nl	8
	7	1034864	(000000-002099)	Angle, Guide	2
	8	49263	(000000-002099)	Tie, Cable, Nyl, 11.4l .19w 3.0 Max D	2
	9	55034	(000000-002099)	Duct, Vyl, 0.74 X 1.50 .75d Max 48.0l	1
	10	49800	(000000-002099)	Latch	2
	11	1029238	(000000-002099)	Lens Assy, W/ Reflector	2
▽	12	1029280	(000000-002099)	Headlight, 12vdc, 35watt 2.8a, Halogen	2
▲		1060413	(000000-002099)	Lamp, 12vdc, 37.5watt, Halogen	1
	13	21168	(000000-002099)	Clip, .250h, Plstc [Pine-Tree]	2
	14	1039812	(000000-002099)	Plate, Hinge	2
	15	1037354	(000000-002099)	Screw, Hex, M8 X 1.25 X 30, 9.8, Sems	6
	16	07791	(000000-002099)	Nut, Hex, Flng, M8 X 1.25	4
	17	1039942	(000000-002099)	Link, 0.19, 1.0w 16.5l, 1/0.5h 1/0.4sl	1
	18	04733-2	(000000-002099)	Pin, Clevis, 0.37d X 0.62l	3
	19	43611	(000000-002099)	Washer, Flat, 0.39b 0.75d .06, Nyl	3
	20	86866	(000000-002099)	Pin, Cotter, Hair, 0.38d .072 Wir	3
	21	1040082	(000000-002099)	Arm Wldt, Safety	1
	22	1046408	(000000-002099)	Molding, Afmkt, Trim, Pvc, .18 .31, 12ft	1
	23	32491	(000000-002099)	Washer, Flat, 0.31, Std	1
	24	08709	(000000-002099)	Nut, Hex, Lock, M8 X 1.25, Nl	2

Fig. 55 - Hopper Cover Group (002100-)

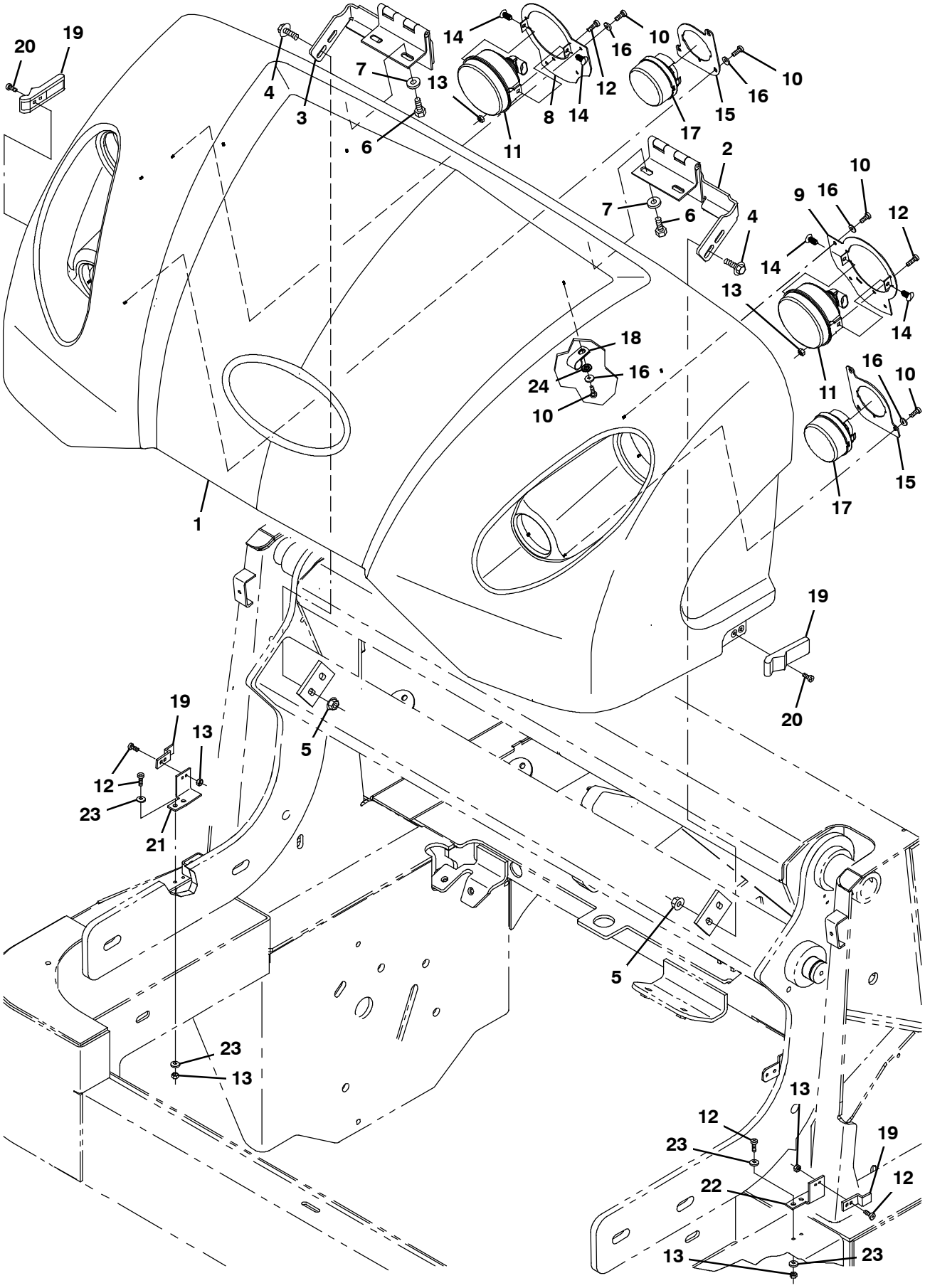

354693

Fig. 55 - Hopper Cover Group (002100-)

	Ref.	Part No.	Serial Number	Description	Qty.
	1	9007972	(002100-)	Cover, Hppr, Rotomold, Afmkt [S30]	1
	2	1059278	(002100-)	Hinge Wldt, Cover, Hppr, Lh	1
	3	1059339	(002100-)	Hinge Wldt, Cover, Hppr, Rh	1
	4	1037346	(002100-)	Screw, Hex, M8 X 1.25 X 25, 9.8, Sems	4
	5	07791	(002100-)	Nut, Hex, Flng, M8 X 1.25	4
	6	15675	(002100-)	Screw, Hex, M8 X 1.25 X 16, Ss	4
	7	32491	(002100-)	Washer, Flat, 0.31, Std	4
	8	1057936	(002100-)	Plate, Ring, Headlight, Rh	1
	9	1057942	(002100-)	Plate, Ring, Headlight, Lh	1
	10	360943	(002100-)	Screw, Pan, 12-16 X 0.75, F/ Plstc	16
▽	11	1029280	(002100-)	Headlight, 12vdc, 35watt 2.8a, Halogen	2
▲		1060413	(002100-)	Lamp, 12vdc, 37.5watt, Halogen	1
	12	06927	(002100-)	Screw, Pan, Phl, M4 X 0.70 X 16, 4.8	10
	13	02850	(002100-)	Nut, Hex, Lock, M4 X 0.70, Nl	10
	14	1066063	(002100-)	Plug, Hole, Rnd, 0.25h 0.43l, Brb, Nyl	4
	15	1057934	(002100-)	Plate, Ring, Light	2
	16	19066	(002100-)	Washer, Flat, 10	16
	17	1029238	(002100-)	Lens Assy, W/ Reflector	2
	18	82829	(002100-)	Clamp, Cable, Stl, 0.63d X 0.75w, 1hole	4
	19	49800	(002100-)	Latch	2
	20	49697	(002100-)	Screw, Pan, Phl, M4 X 0.70 X 10, Ss	4
	21	1039971	(002100-)	Bracket, Latch, Rh	1
	22	1039999	(002100-)	Bracket, Latch, Lh	1
	23	19065	(002100-)	Washer, Flat, 08	8
	24	41139	(002100-)	Washer, Lock, Int-ext, 10	4

Fig. 56 - Hopper Lift Arms and Bumper Group, Plastic

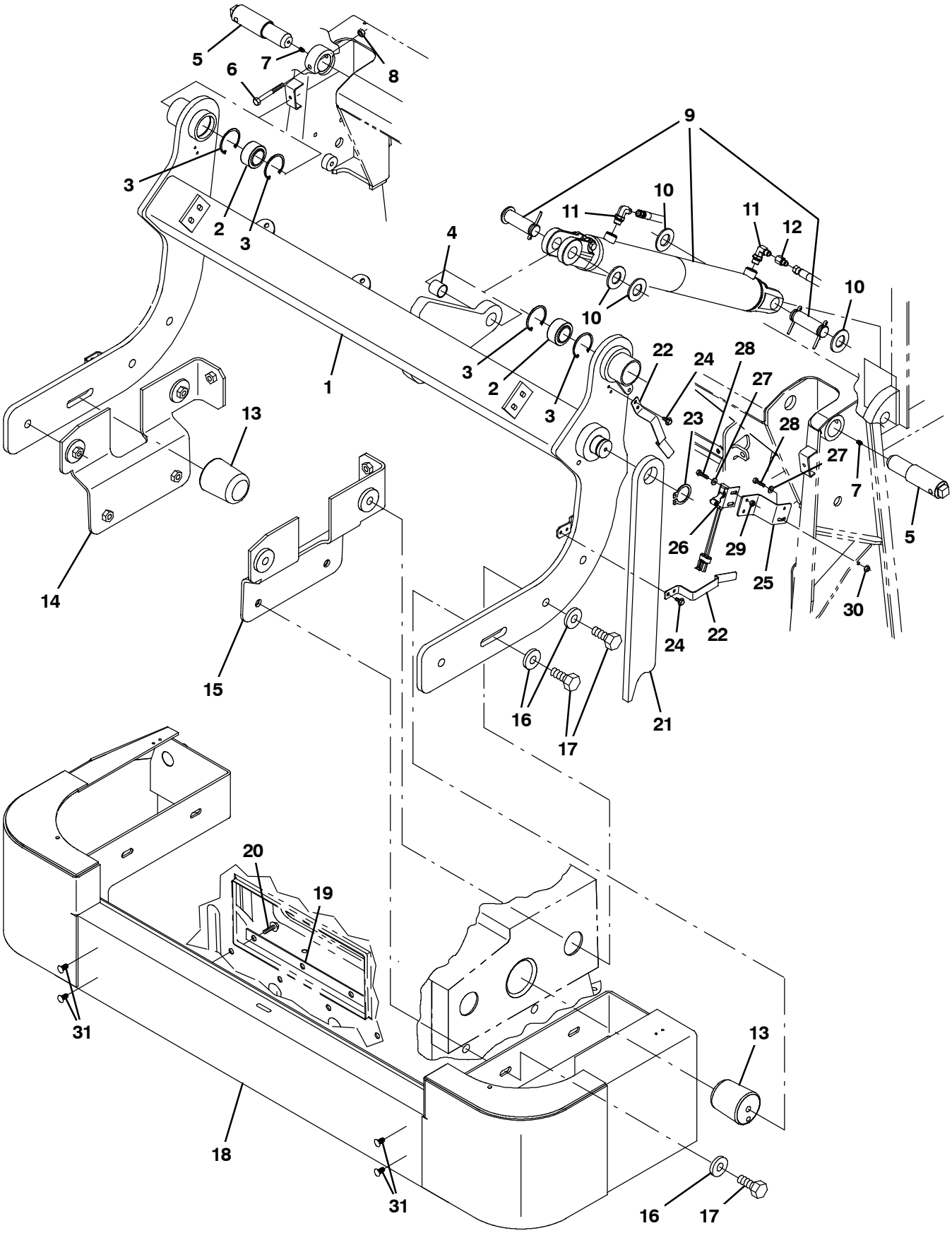

354694

Fig. 56 - Hopper Lift Arms and Bumper Group, Plastic

	Ref.	Part No.	Serial Number	Description	Qty.
	1	9004519	(000000-)	Arm, Lift, Hppr, W/ Label, Replmt	1
	2	42120-1	(000000-)	Bearing, Self Align, 1.25b 2.00d	2
	3	59542	(000000-)	Ring, Retaining, Int, 2.00d	4
	4	35529	(000000-)	Bushing, Sleeve, 1.00b 1.13d 0.99l, Fgl	1
	5	1030102	(000000-)	Pin, Lift, Hppr	2
	6	39279	(000000-)	Screw, Hex, M8 X 1.25 X 70, 8.8	2
	7	07259	(000000-)	Fitting, Grease, Str Pm04 .47l	2
	8	08709	(000000-)	Nut, Hex, Lock, M8 X 1.25, Nl	2
▽	9	1038915	(000000-)	Cylinder, Hyd, 2.5b 28.6l 18.62strk 3000	1
▲		373702	(000000-)	Seal Kit	1
	10	32598	(000000-)	Washer, Flat, 1.02b 1.75d .12, Stl	4
	11	47638	(000000-002999)	Fitting, Hyd, E90, Jm04/Om06	2
	11	762425	(003000-)	Fitting, Hyd, E90, Fm04/Om06	2
	12	16455	(000000-002999)	Fitting, Hyd, Rst, Jf04/Jm04, .047	1
	12	1067059	(003000-)	Fitting, Hyd, Rst, Fm04/Of04, .047	1
	13	1038922	(000000-)	Pin, Hppr, Lift	2
	14	1042327	(000000-)	Plate Wldt, Sppt, Hppr, Rh	1
	15	1042328	(000000-)	Plate Wldt, Sppt, Hppr, Lh	1
	16	36328	(000000-)	Washer, Flat, Belleville, .50	10
	17	69972	(000000-)	Screw, Hex, M12 X 1.75 X 40, 10.9	10
	18	1026317	(000000-)	Bumper Wldt, Front	1
	19	1038070	(000000-)	Bar, Flat, Ss 0.12 01.00 X 18.5l, 4/0.5h	1
	20	1037355	(000000-)	Screw, Hex, M8 X 1.25 X 35, 9.8, Sems	4
	21	9004527	(000000-)	Arm, Safety, Hppr, W/ Label, Replmt	1
	22	1042973	(000000-)	Clip, Spring, Prop Arm	2
	23	63926	(000000-)	Ring, Retaining, Ext, 1.50d, Hd	1
	24	222158	(000000-)	Screw, Hex, M6 X 1.00 X 10, Fmg	4
	25	1039057	(000000-)	Bracket, Mtg, Switch	1
	26	367404	(000000-)	Switch, Snap, 15a No, Rlr	1
	27	19066	(000000-)	Washer, Flat, 10	4
	28	09252	(000000-)	Screw, Hex, M5 X 0.80 X 20, 8.8	4
	29	06549	(000000-)	Nut, Hex, Lock, M5 X 0.80, Nl	4
	30	07789	(000000-)	Nut, Hex, Flng, M5 X 0.80	2
	31	21168	(000000-)	Plug, Hole, Rnd, 0.25h 0.8l, Brb, Nyl	4

Fig. 57 - Hopper Lift Arms and Bumper Group, Steel

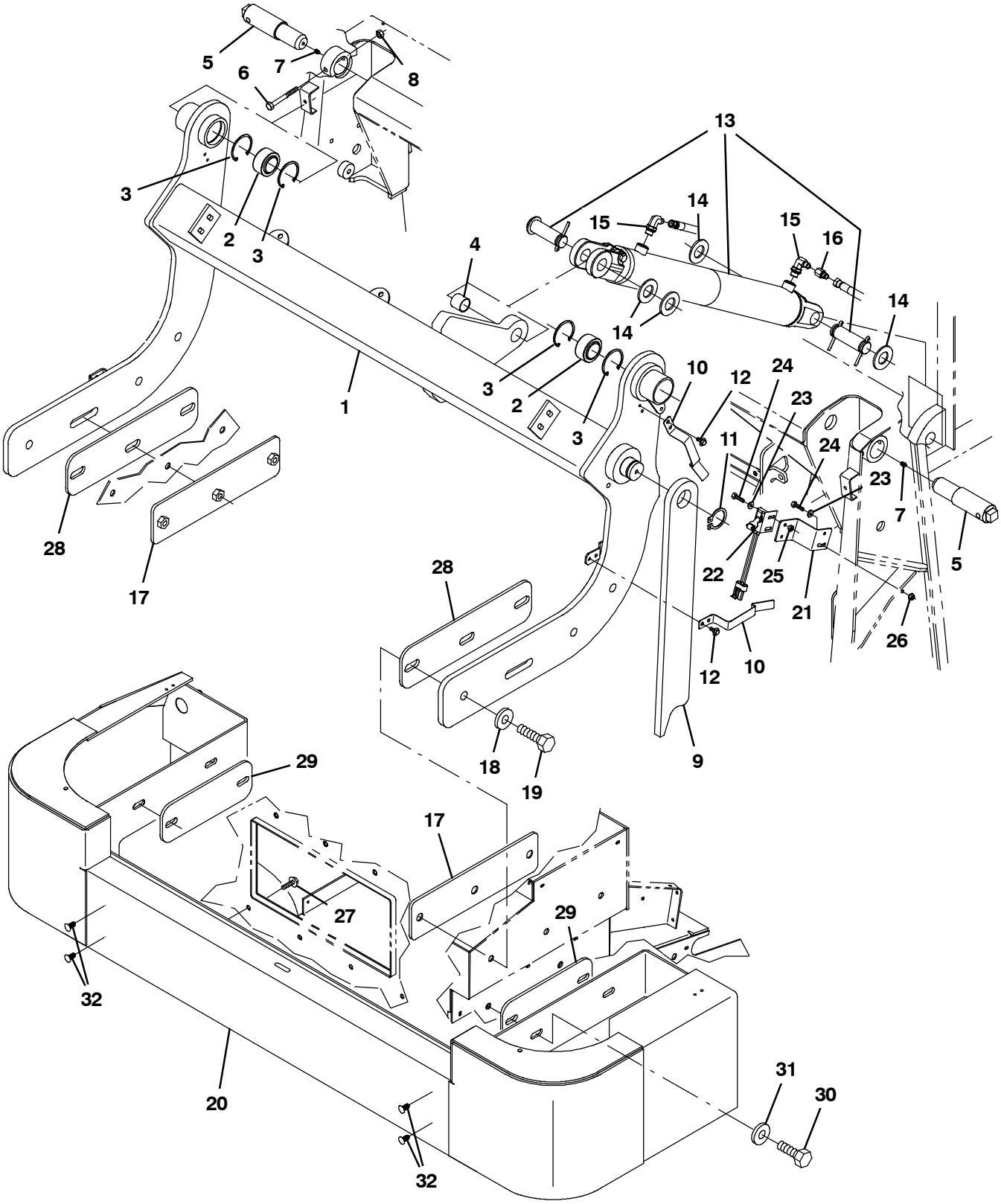

354695

Fig. 57 - Hopper Lift Arms and Bumper Group, Steel

	Ref.	Part No.	Serial Number	Description	Qty.
	1	9004519	(000000-)	Arm, Lift, Hppr, W/ Label, Replmt	1
	2	42120-1	(000000-)	Bearing, Self Align, 1.25b 2.00d	2
	3	59542	(000000-)	Ring, Retaining, Int, 2.00d	4
	4	35529	(000000-)	Bushing, Sleeve, 1.00b 1.13d 0.99l, Fgl	1
	5	1030102	(000000-)	Pin, Lift, Hppr	2
	6	39279	(000000-)	Screw, Hex, M8 X 1.25 X 70, 8.8	2
	7	07259	(000000-)	Fitting, Grease, Str Pm04 .47l	2
	8	08709	(000000-)	Nut, Hex, Lock, M8 X 1.25, Nl	2
	9	9004527	(000000-)	Arm, Safety, Hppr, W/ Label, Replmt	1
	10	1042973	(000000-)	Clip, Spring, Prop Arm	2
	11	63926	(000000-)	Ring, Retaining, Ext, 1.50d, Hd	1
	12	222158	(000000-)	Screw, Hex, M6 X 1.00 X 10, Fmg	4
▽	13	1038915	(000000-)	Cylinder, Hyd, 2.5b 28.6l 18.62strk 3000	1
▲		373702	(000000-)	Seal Kit	1
	14	32598	(000000-)	Washer, Flat, 1.02b 1.75d .12, Stl	4
	15	47638	(000000-002999)	Fitting, Hyd, E90, Jm04/Om06	2
	15	762425	(003000-)	Fitting, Hyd, E90, Fm04/Om06	2
	16	16455	(000000-002999)	Fitting, Hyd, Rst, Jf04/Jm04, .047	1
	16	1067059	(003000-)	Fitting, Hyd, Rst, Fm04/Of04, .047	1
	17	1039914	(000000-)	Plate, Sppt, Hppr	2
	18	36328	(000000-)	Washer, Flat, Belleville, .50	6
	19	06971	(000000-)	Screw, Hex, M12 X 1.75 X 50, 8.8	6
	20	1026317	(000000-)	Bumper Wldt, Front	1
	21	1039057	(000000-)	Bracket, Mtg, Switch	1
	22	367404	(000000-)	Switch, Snap, 15a No, Rlr	1
	23	19066	(000000-)	Washer, Flat, 10	4
	24	09252	(000000-)	Screw, Hex, M5 X 0.80 X 20, 8.8	4
	25	06549	(000000-)	Nut, Hex, Lock, M5 X 0.80, Nl	4
	26	07789	(000000-)	Nut, Hex, Flng, M5 X 0.80	2
	27	1037355	(000000-)	Screw, Hex, M8 X 1.25 X 35, 9.8, Sems	4
	28	1046929	(000000-)	Plate	2
	29	1046928	(000000-)	Plate	2
	30	69972	(000000-)	Screw, Hex, M12 X 1.75 X 40, 10.9	4
	31	32493	(000000-)	Washer, Flat, 0.50, Std	4
	32	21168	(000000-)	Plug, Hole, Rnd, 0.25h 0.8l, Brb, Nyl	4

Fig. 58 - Hopper Counter Weight Group, Steel

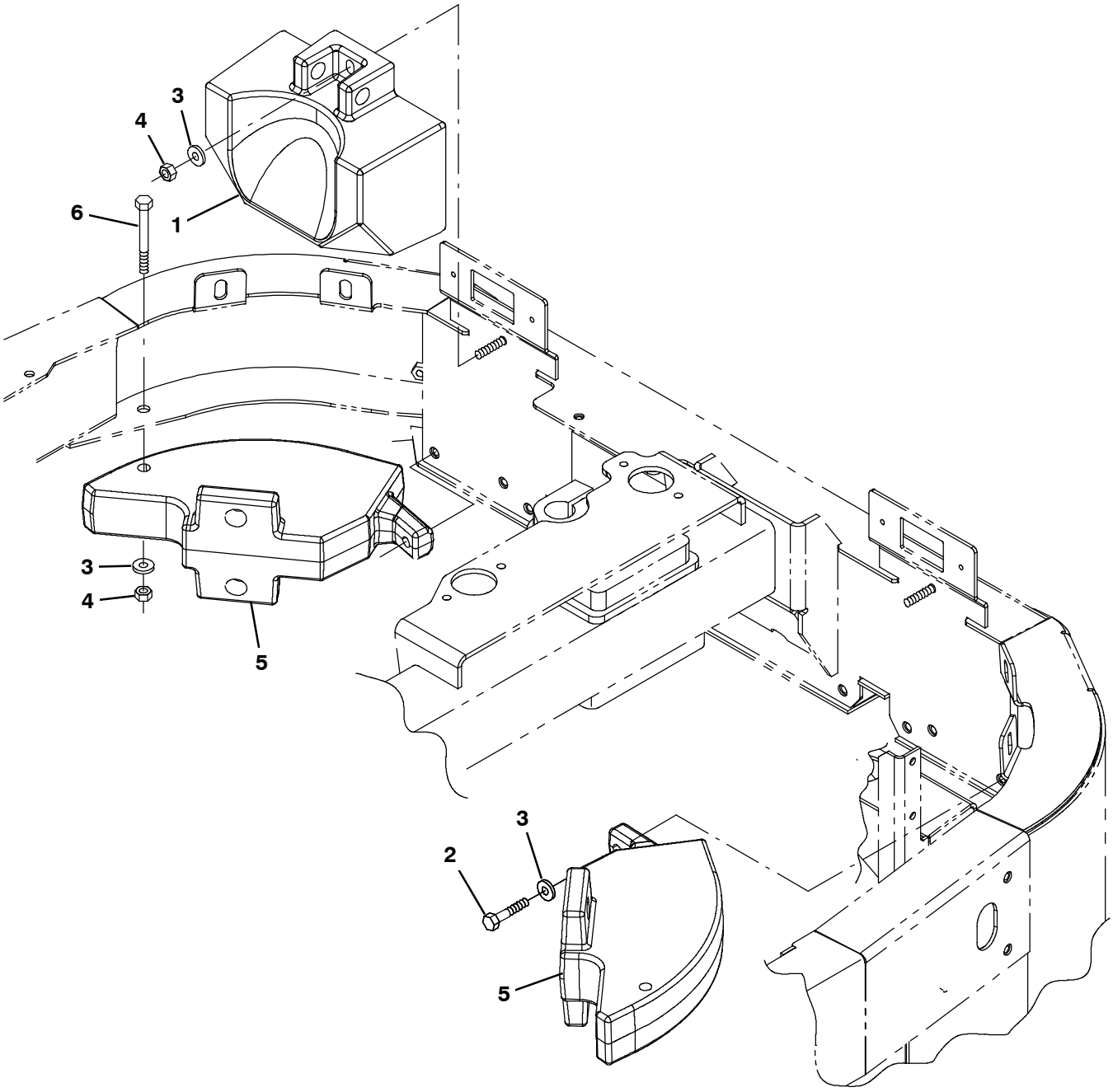

354696

Fig. 58 - Hopper Counter Weight Group, Steel

Ref.	Part No.	Serial Number	Description	Qty.
1	1031503	(000000-)	Weight, Counter, Casting, 72.8lb	1
2	16930	(000000-)	Screw, Hex, M10 X 1.50 X 50, 8.8	3
3	32493	(000000-)	Washer, Flat, 0.50, Std	6
4	08714	(000000-)	Nut, Hex, Lock, M10 X 1.5, Nl, Ss	3
5	1034978	(000000-)	Weight, Counter, Casting, 52.8lb	2
6	03193	(000000-)	Screw, Hex, M10 X 1.50 X 90, 8.8	2

Fig. 59 - Hopper Pre-Filter Group

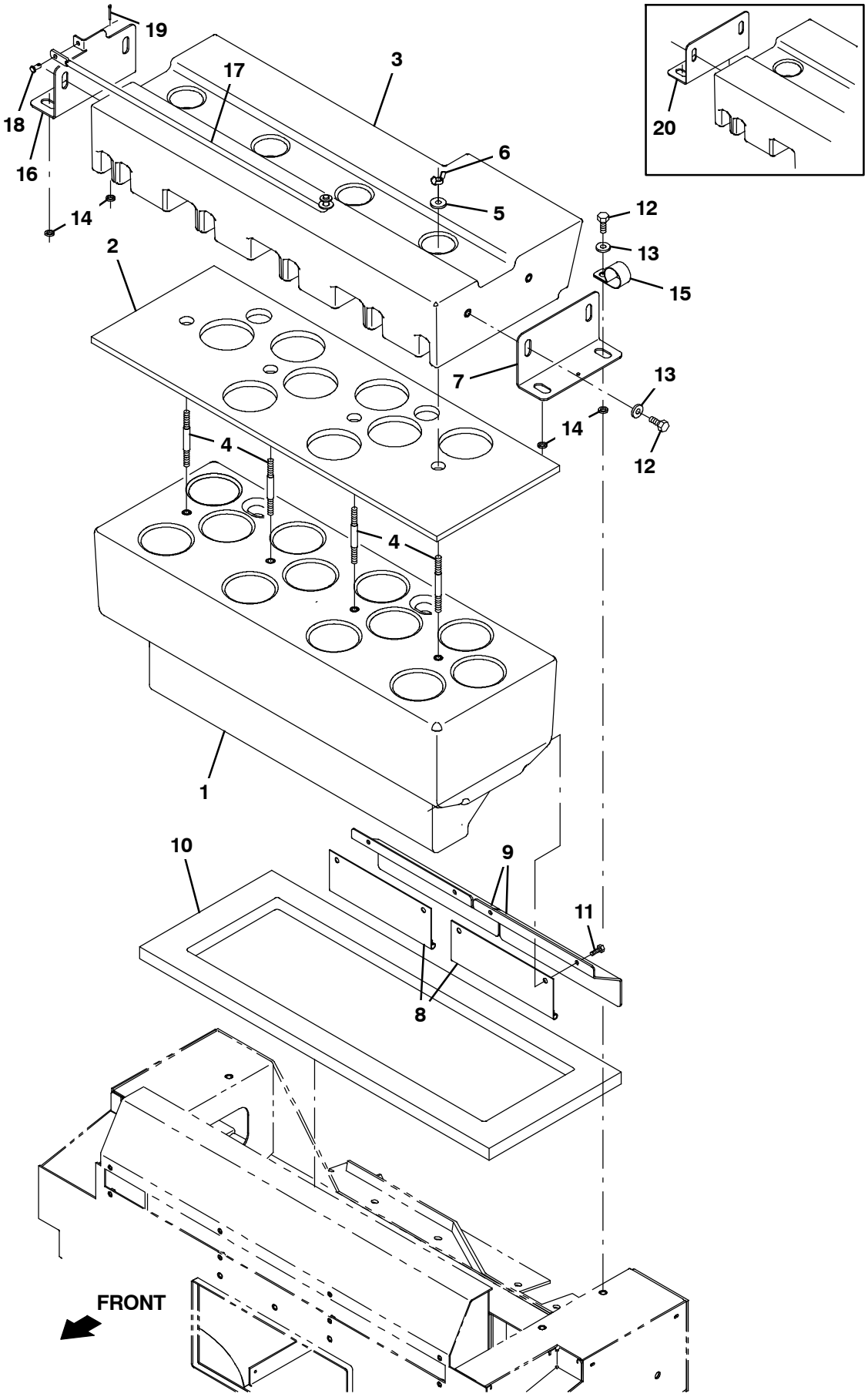

354697

Fig. 59 - Hopper Pre-Filter Group

Ref.	Part No.	Serial Number	Description	Qty.
1	1035293	(000000-)	Box, Pre-Filter, Lower, Trimmed	1
2	1027149	(000000-)	Seal, Pre-Filter [Midsize]	1
3	1035506	(000000-)	Box, Pre-Filter, Upper, 3 X 4, Trimmed	1
4	1038160	(000000-)	Rod, Thrd, 2 End, M10 X 1.5 04.6l	4
5	33948	(000000-)	Washer, Flat, 0.38, Fendr	4
6	1038172	(000000-)	Nut, Wing, M10 X 1.5, Pltd	4
7	1045109	(000000-)	Bracket, Mtg, Filter	1
8	1036802	(000000-)	Seal Assy, Pre-Filter	2
9	1042047	(000000-)	Bracket, Retainer, Dust Seal	2
10	1044998	(000000-)	Seal, Pre-Filter	1
11	06942	(000000-)	Screw, Hex, M6 X 1.00 X 16, 8.8	4
12	06960	(000000-)	Screw, Hex, M10 X 1.50 X 16, 8.8	8
13	13248	(000000-)	Washer, Flat, 0.40b 1.12d .12, Stl, Pl	8
14	390880	(000000-)	Sleeve, P/M, 0.40b 0.63d 0.1l [430ss]	4
15	53466	(000000-)	Clamp, Cable, Stl, 1.50d X 1.00w, 1hole	1
16	1060765	(002100-)	Bracket, Mtg, Filter, Rh	1
17	1045434	(002100-)	Rod Wldt, Safety, Hppr Cover	1
18	28296	(002100-)	Pin, Clevis, 0.25d X 0.50l	1
19	39005	(002100-)	Pin, Cotter, .094 X 0.75	1
20	1045109	(000000-002099)	Bracket, Mtg, Filter	1

Fig. 60 - Hopper Vacuum Fan Group

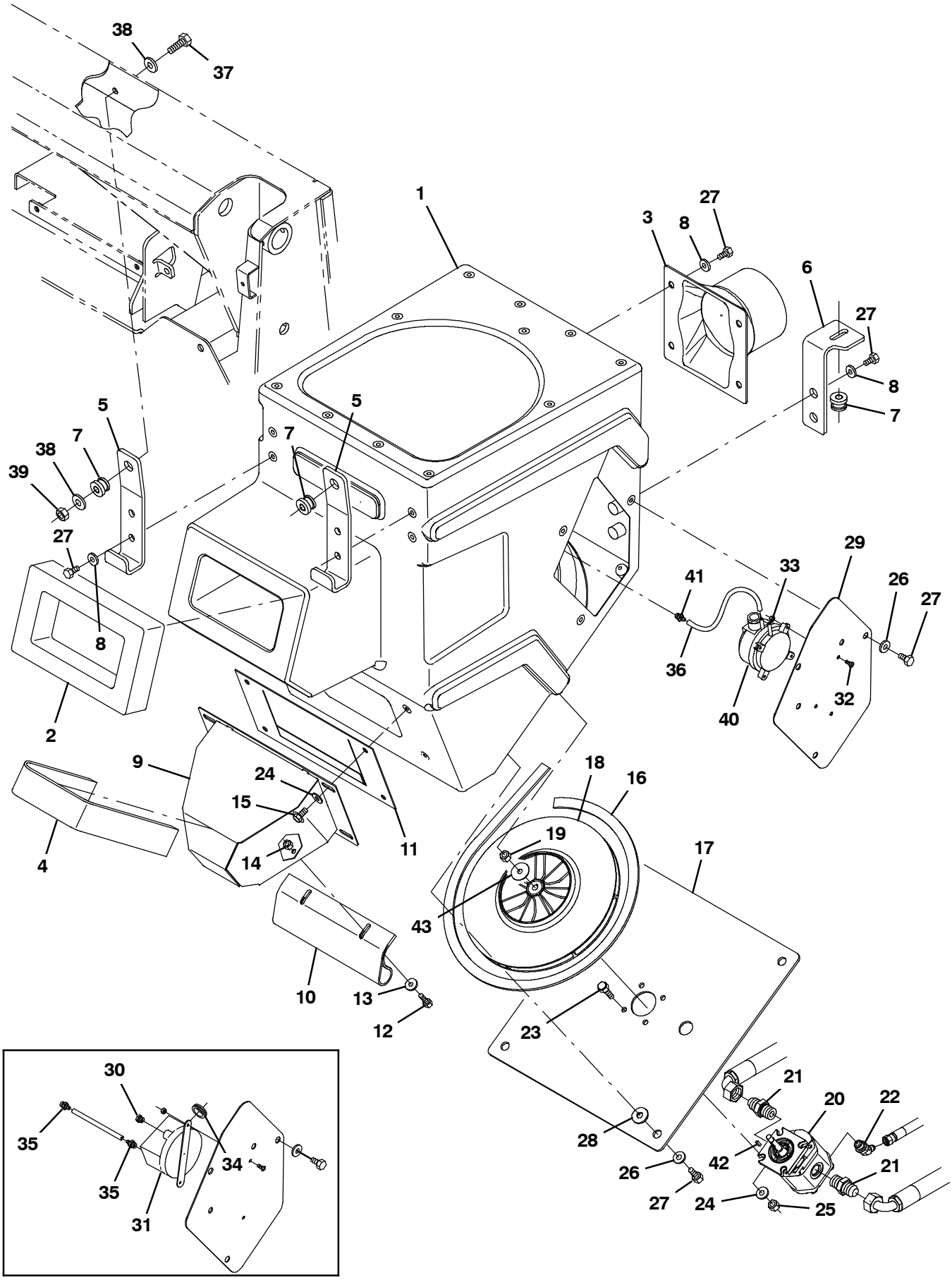

354698

Fig. 60 - Hopper Vacuum Fan Group

	Ref.	Part No.	Serial Number	Description	Qty.
	1	1035510	(000000-)	Housing, Fltr, Trimmed	1
	2	1035483	(000000-)	Gasket, 2.00, 06.30w 10.63l, Adh	1
	3	1031122	(000000-)	Duct, Outlet, Vacuum	1
	4	1048997	(000000-)	Seal, Chute, Dust	1
	5	1030622	(000000-)	Bracket, Mtg, Fltr	2
	6	1045232	(000000-)	Bracket, Mtg, Fltr	1
	7	54274	(000000-)	Isolator, Vib, Bshg, 1.1d 0.6l .4b 0.78h	3
	8	1017218	(000000-)	Washer, Flat, 0.32b 1.00d .12, Ss	10
	9	1039853	(000000-)	Duct Wldt, Chute, Dust, 34 Deg	1
	10	1039948	(000000-)	Seal, Rbr, .13, 9.06w 9.84l, Red	1
	11	1042463	(000000-)	Flap Assy, Seal, Dust Chute	1
	12	06943	(000000-)	Screw, Hex, M6 X 1.00 X 20, 8.8	2
	13	41178	(000000-)	Washer, Flat, 0.25, Fendr	2
	14	08708	(000000-)	Nut, Hex, Lock, M6 X 1.00, Nl	2
	15	16735	(000000-)	Screw, Hex, M8 X 1.25 X 16, 8.8	4
	16	9008624	(000000-)	Seal Kit, Vacuum Hsng, Replmt	1
	17	1041237	(000000-)	Plate, Mtg, Vacfan	1
	18	1039127	(000000-)	Impeller Assy, Vacfan [Coyote]	1
	19	07786	(000000-)	Nut, Hex, Std, M8 X 1	1
▽	20	1039846	(000000-)	Motor, Hyd, Gear, Ext 0.28 Rh 3000	1
▲		373712	(000000-)	Motor, Info, Repair	1
▲		373711	(000000-)	Seal Kit, Motor	1
	21	44869	(000000-002999)	Fitting, Hyd, Str, Jm08/Om08	2
	21	762445	(003000-)	Fitting, Hyd, Str, Fm08/Om08	2
	22	393215	(000000-002999)	Fitting, Hyd, E45, Jm04/Om06	1
	22	1067055	(003000-)	Fitting, Hyd, E45, Fm04/Om06	1
	23	39277	(000000-)	Screw, Hex, M8 X 1.25 X 25, 8.8	4
	24	39349	(000000-)	Washer, Flat, 0.31, Sae	8
	25	08709	(000000-)	Nut, Hex, Lock, M8 X 1.25, Nl	4
	26	32491	(000000-)	Washer, Flat, 0.31, Std	7
	27	16931	(000000-)	Screw, Hex, M8 X 1.25 X 20, 8.8	17
	28	13248	(000000-)	Washer, Flat, 0.40b 1.12d .12, Stl, Pl	6
	29	1037088	(000000-)	Plate, Cover	1
	30	82739	(000000-002105)	Fitting, Brs, Breather [02mp]	1
	31	1045128	(000000-002105)	Switch, Pressure, 12v	1
	32	06927	(000000-)	Screw, Pan, Phl, M4 X 0.70 X 16, Ss	2
	33	02850	(000000-)	Nut, Hex, Lock, M4 X 0.70, Nl	2
	34	10632-4	(000000-002105)	Grommet, Rbr, 0.62id, F/0.9h, .06 Matl	1
	35	40607	(000000-002105)	Fitting, Brs, Str, Bm03/Pm02	2
	36	09893	(000000-)	Hose, Vacuum, 0.16id X 012.0l	1
	37	39285	(000000-)	Screw, Hex, M10 X 1.50 X 40, 8.8	2
	38	32492	(000000-)	Washer, Flat, 0.38, Std	2
	39	41430	(000000-)	Nut, Hex, Lock, M10 X 1.5, Nl	2
	40	9009247	(002106-)	Switch Kit, Press, Replmt[S30]	1
	41	40607	(002106-)	Fitting, Brs, Str, Bm03/Pm02	1
	42	00960	(000000-)	Key, Sq, 0.12 X 0.12, 0.50l	2
	43	30013	(000000-)	Washer, Flat, 0.31, Fendr	1

Fig. 61 - Hopper Filter Shaker Group

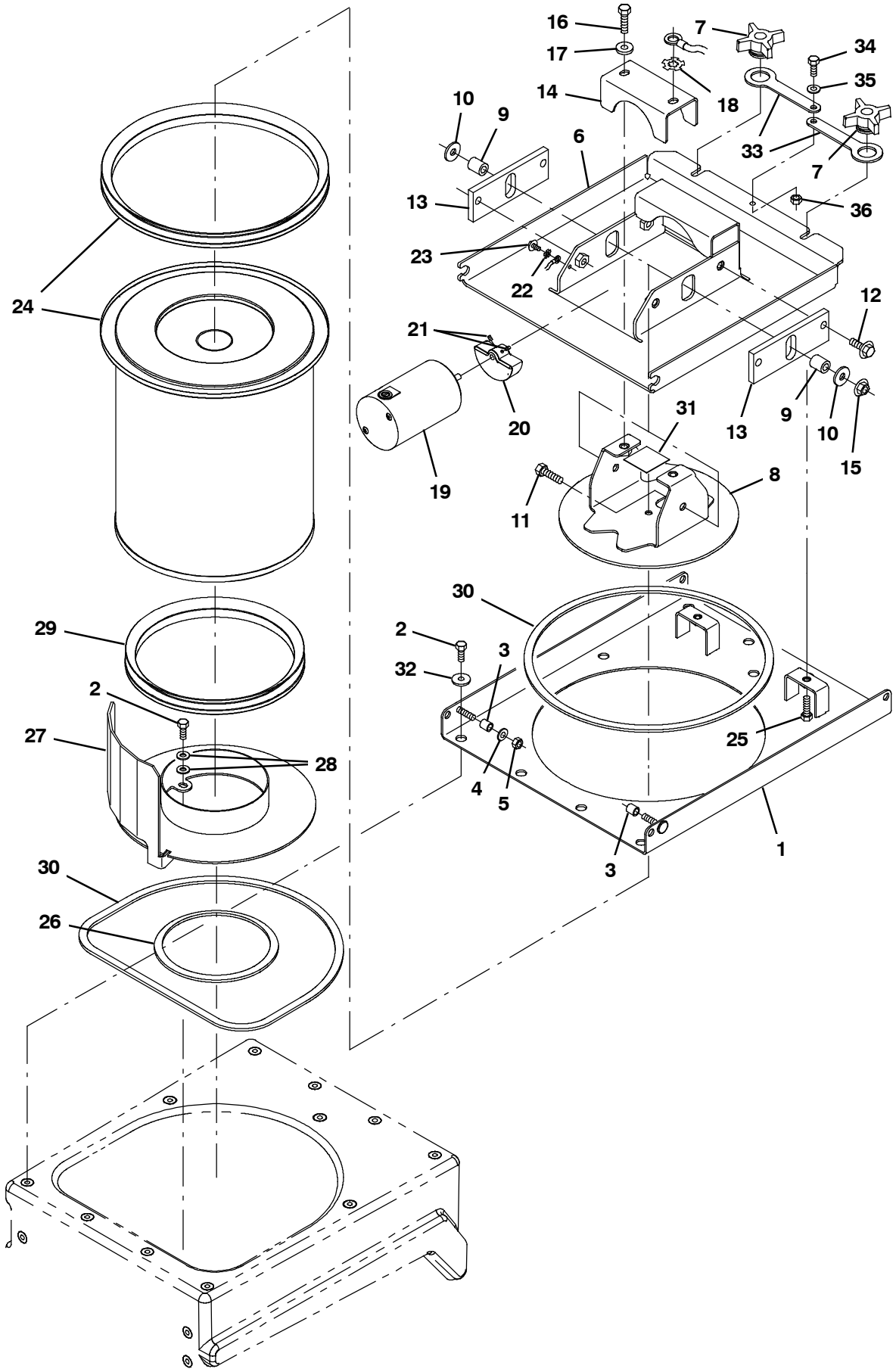

354699

Fig. 61 - Hopper Filter Shaker Group

Ref.	Part No.	Serial Number	Description	Qty.
1	1030451	(000000-)	Plate Wldt, Lower	1
2	16391	(000000-)	Screw, Hex, M8 X 1.25 X 20, 8.8	13
3	63234	(000000-)	Tube, 0.38id 0.5ood 00.6l, Ss	2
4	39349	(000000-)	Washer, Flat, 0.31, Sae	4
5	08713	(000000-)	Nut, Hex, Lock, M8 X 1.25, Nl, Ss	2
6	1043869	(000000-)	Door Wldt, Shakr	1
7	1015911	(000000-001430)	Knob, Star, 2.75d 4ear 1.1l M8x1.25,Thru	2
7	1048335	(001431-)	Knob, Star, 2.75d 4ear 1.1l M8x1.25	2
8	1040812	(000000-)	Bracket Wldt, Mtg, Shakr	1
9	1043927	(000000-)	Tube, 0.41id, 0.73od, 00.88l, Stl	2
10	13248	(000000-)	Washer, Flat, 0.40b 1.12d .12, Stl, Pl	2
11	39285	(000000-)	Screw, Hex, M10 X 1.50 X 40, 8.8	2
12	1037358	(000000-)	Screw, Hex, M10 X 1.50 X 35, 9.8, Sems	4
13	1043092	(000000-)	Plate, Guide	2
14	1040756	(000000-)	Retainer, Motor	1
15	07792	(000000-)	Nut, Hex, Flng, M10 X 1.50	2
16	39283	(000000-)	Screw, Hex, M10 X 1.50 X 25, 8.8	2
17	32485	(000000-)	Washer, Flat, 0.38, Sae	2
18	41142	(000000-)	Washer, Lock, Int-Ext, 0.38	1
19	1045061	(000000-)	Motor, Ele, 2200rpm 0.08hp 06.0a, Shakr	1
20	1053164	(000000-)	Weight, Eccentric	1
21	20634	(000000-)	Screw, Set, Soc, 10-24 X 0.25, Nl	2
22	41140	(000000-)	Washer, Lock, Int-Ext, 0.25	1
23	361339	(000000-)	Screw, Hex, M6 X 1.00 X 16, Fmg	1
24	9008919	(000000-)	Filter Assy, Cyl, Dust, Replmt [S30]	1
25	76570	(000000-)	Screw, Hex, M8 X 1.25 X 30, 8.8	2
26	1046428	(000000-)	Seal, Afmkt, Rbr, Clsd, Adh, 02ft	1
27	1042027	(000000-)	Flange Wldt, Fltr	1
28	39349	(000000-)	Washer, Flat, 0.31, Sae	4
29	1040564	(000000-)	Seal, Lip, 8.86id	1
30	1053361	(000000-)	Seal, Afmkt, Rbr, Clsd, Adh, 05f	1
31	36661	(000000-)	Gasket, Neo, .06, 02.00w 02.00l, Adh	1
32	1017218	(000000-)	Washer, Flat, 0.32b 1.00d .12, Ss	11
33	1048353	(001431-)	Strap, Rbr	2
34	16931	(001431-)	Screw, Hex, M8 X 1.25 X 20, 8.8	2
35	39349	(001431-)	Washer, Flat, 0.31, Sae	1
36	39311	(001431-)	Nut, Hex, Std, M8 X 1.25	1

Fig. 62 - Side Brush Lift Group, S30

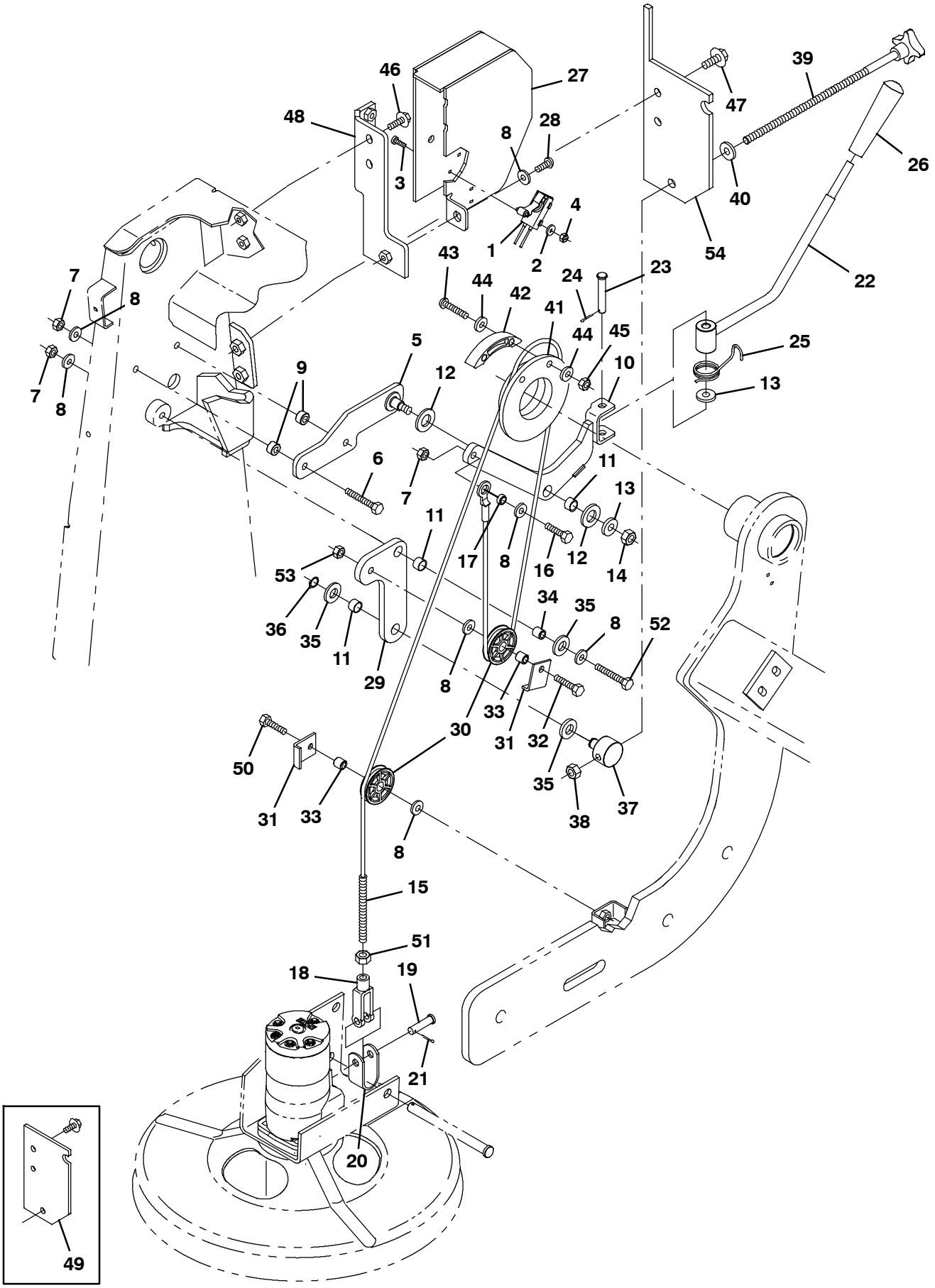

354710

Fig. 62 - Side Brush Lift Group, S30

Ref.	Part No.	Serial Number	Description	Qty.
1	367403	(000000-)	Switch, Snap, 15a Nc, Rlr	1
2	19066	(000000-)	Washer, Flat, 10	2
3	1045487	(000000-)	Screw, Pan, Phl, M5 X 0.80 X 16, Blk	2
4	06549	(000000-)	Nut, Hex, Lock, M5 X 0.80, Nl	2
5	1038329	(000000-)	Bracket Wldt, Brush, Side	1
6	41342	(000000-)	Screw, Hex, M8 X 1.25 X 40, 8.8	2
7	08709	(000000-)	Nut, Hex, Lock, M8 X 1.25, Nl	4
8	39349	(000000-)	Washer, Flat, 0.31, Sae	11
9	360460	(000000-)	Sleeve, P/M, 0.33b 0.63d 0.4l, Ss / Oil	2
10	1038372	(000000-)	Lever Wldt, Brush, Side	1
11	64173	(000000-)	Bushing, Sleeve, 0.50b 0.59d 0.38l, Stl	3
12	64425	(000000-)	Washer, Thrust, 0.61b 1.25d .06, Fgl	2
13	32485	(000000-)	Washer, Flat, 0.38, Sae	2
14	41430	(000000-)	Nut, Hex, Lock, M10 X 1.5, Nl	1
15	1036702	(000000-)	Cable, Glv .13d 063.4l .50eye / M10	1
16	76570	(000000-)	Screw, Hex, M8 X 1.25 X 30, 8.8	1
17	360801	(000000-)	Sleeve, 0.31b 0.50d 0.3l, Ss	1
18	12267	(000000-)	Clevis, Adj, 0.38pin, M10x1.5	1
19	29558	(000000-)	Pin, Clevis, 0.37d X 1.50l	1
20	59899	(000000-)	Bracket, U, .12, 1.2w 2.3 1.0l, 2/0.6h	1
21	08179	(000000-)	Pin, Cotter, .094 X 1.00	1
22	1037265	(000000-)	Arm Wldt, Lever	1
23	51813	(000000-)	Pin, Clevis, 0.37d X 2.12l	1
24	08182	(000000-)	Pin, Cotter, .125 X 1.00	1
25	1037476	(000000-)	Spring, Tors, 1.09id .11wir 03.0coil	1
26	54995	(000000-)	Knob, 1.12d 3.86l M10 X 1.5, Plstc Tpr]	1
27	1038101	(000000-)	Bracket Wldt	1
28	1031665	(000000-)	Screw, Pan, M8 X 1.25 X 25, Blk	3
29	1038060	(000000-)	Plate, Adj, Brush	1
30	369781	(000000-)	Pulley, Cable, 1.5d Nyl	2
31	54400	(000000-)	Bracket, Angle, Keeper, Cable	2
32	59658	(000000-)	Screw, Hex, M8 X 1.25 X 35, Nl, Ss	1
33	222460	(000000-)	Sleeve, P/M, 0.31b 0.50d 0.5l [430ss]	1
34	223609	(000000-)	Sleeve, P/M, 0.31b 0.50d 0.5l [430ss]	1
35	32486	(000000-)	Washer, Flat, 0.50, Sae	3
36	86953	(000000-)	Ring, Retaining, Ext, 0.50d, Ss	1
37	1039228	(000000-)	Pivot, Adj, Brush	1
38	41430	(000000-)	Nut, Hex, Lock, M10 X 1.5, Nl	1
39	1039553	(000000-)	Knob Assy,Star,1.97d 4ear M10x1.5 10.75l	1
40	763042	(000000-)	Washer, Flat, Belleville, M10	1
41	1034760	(000000-)	Pulley, Cable, 3.1d 2.30b, .19d Cable	1
42	1034763	(000000-)	Retainer, Pulley	1
43	397826	(000000-)	Screw, Btn, M8 X 1.25 X 40, Ss	2
44	01685	(000000-)	Washer, Flat, 0.38b 0.88d .08, Ss	4
45	08713	(000000-)	Nut, Hex, Lock, M8 X 1.25, Nl, Ss	2
46	1037354	(000000-)	Screw, Hex, M8 X 1.25 X 30, 9.8, Sems	2
47	1037358	(000000-)	Screw, Hex, M10 X 1.50 X 35, 9.8, Sems	2
48	1033863	(000000-002099)	Plate, Lift, Upper	1
49	1038896	(000000-)	Plate, Lift, Brush	1
50	76570	(000000-)	Screw, Hex, M8 X 1.25 X 30, 8.8	1
51	32716	(000000-)	Nut, Hex, Jam, M10 X 1.5, Ss	1
52	39278	(000000-)	Screw, Hex, M8 X 1.25 X 50, 8.8	1
53	39311	(000000-)	Nut, Hex, Std, M8 X 1.25	1
54	1060763	(002100-)	Plate, Lift, Brush	1

Fig. 63 - Side Brush Motor and Pivot Group, S30

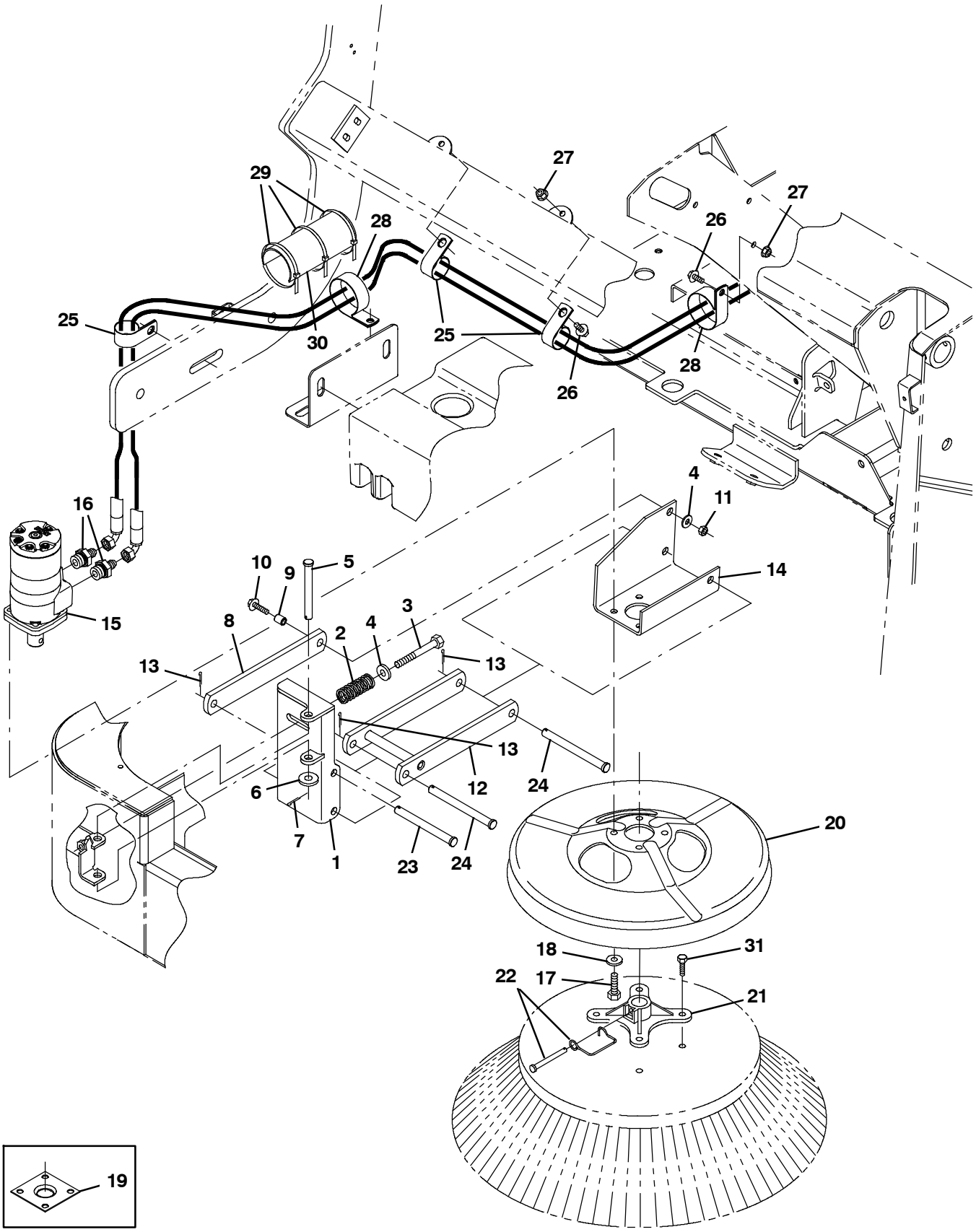

354711

Fig. 63 - Side Brush Motor and Pivot Group, S30

Ref.	Part No.	Serial Number	Description	Qty.
1	1029704	(000000-)	Pivot Wldt, Brush, Side	1
2	45261	(000000-)	Spring, Cmpr, 0.97od .11wir 02.5l	1
3	06965	(000000-)	Screw, Hex, M10 X 1.50 X 80, 8.8	1
4	32485	(000000-)	Washer, Flat, 0.38, Sae	2
5	222196	(000000-)	Pin, Clevis, 0.50d X 4.25l	1
6	32486	(000000-)	Washer, Flat, 0.50, Sae	1
7	08175	(000000-)	Pin, Cotter, .125 X 1.25	1
8	1029709	(000000-)	Arm, Brush, Side	1
9	80395	(000000-)	Sleeve, P/M, 0.31b 0.50d 0.7l [430ss]	1
10	1037355	(000000-)	Screw, Hex, M8 X 1.25 X 35, 9.8, Sems	1
11	08709	(000000-)	Nut, Hex, Lock, M8 X 1.25, Nl	1
12	1029682	(000000-)	Arm Wldt, Brush, Side	1
13	08182	(000000-)	Pin, Cotter, .125 X 1.00	3
14	1029674	(000000-)	Bracket, Mtg, Motor, Side Brush	1
15	379607	(000000-002133)	Motor, Hyd, Gear, Int 17.9 Bi-Dir 1500 (See Breakdowns)	1
15	1057338	(002134-)	Motor, Hyd, Gear, Int 17.9 Bi-Dir 2500	1
16	47508	(000000-002999)	Fitting, Hyd, Str, Jm06/Om10	2
16	762439	(003000-)	Fitting, Hyd, Str, Fm06/Om10	2
17	46559	(000000-)	Screw, Hex, .38-16 X 1.25, Nl	4
18	32492	(000000-)	Washer, Flat, 0.38, Std	4
19	16082	(000000-002133)	Guard, String, Motor, Brush	1
20	1054256	(000000-)	Guard, Brush	1
21	47501	(000000-)	Hub, Adapter, Brush, 1.00b	1
22	84581	(000000-)	Pin Assy, Side Brush W/ Clip	1
23	51538	(000000-)	Pin, Clevis, 0.50d X 5.00l	1
24	51225	(000000-)	Pin, Clevis, 0.50d X 5.50l	2
25	53468	(000000-)	Clamp, Cable, Stl, 1.75d X 1.00w, 1hole	3
26	1037346	(000000-)	Screw, Hex, M8 X 1.25 X 25, 9.8, Sems	2
27	07791	(000000-)	Nut, Hex, Flng, M8 X 1.25	2
28	70157	(000000-)	Clamp, Cable, Ss, 2.50d X 1.00w, 1hole	2
29	44961	(000000-)	Tie, Cable, Nyl, 14.5l .30w 4.0 Max D	3
30	762179	(000000-)	Guard, Hose, Rbr, 5.0l	1
31	39394	(000000-)	Screw, Hex, .31-09 X 1.25, Wood	4

Fig. 64 - Side Brush Motor Group, S30 XP

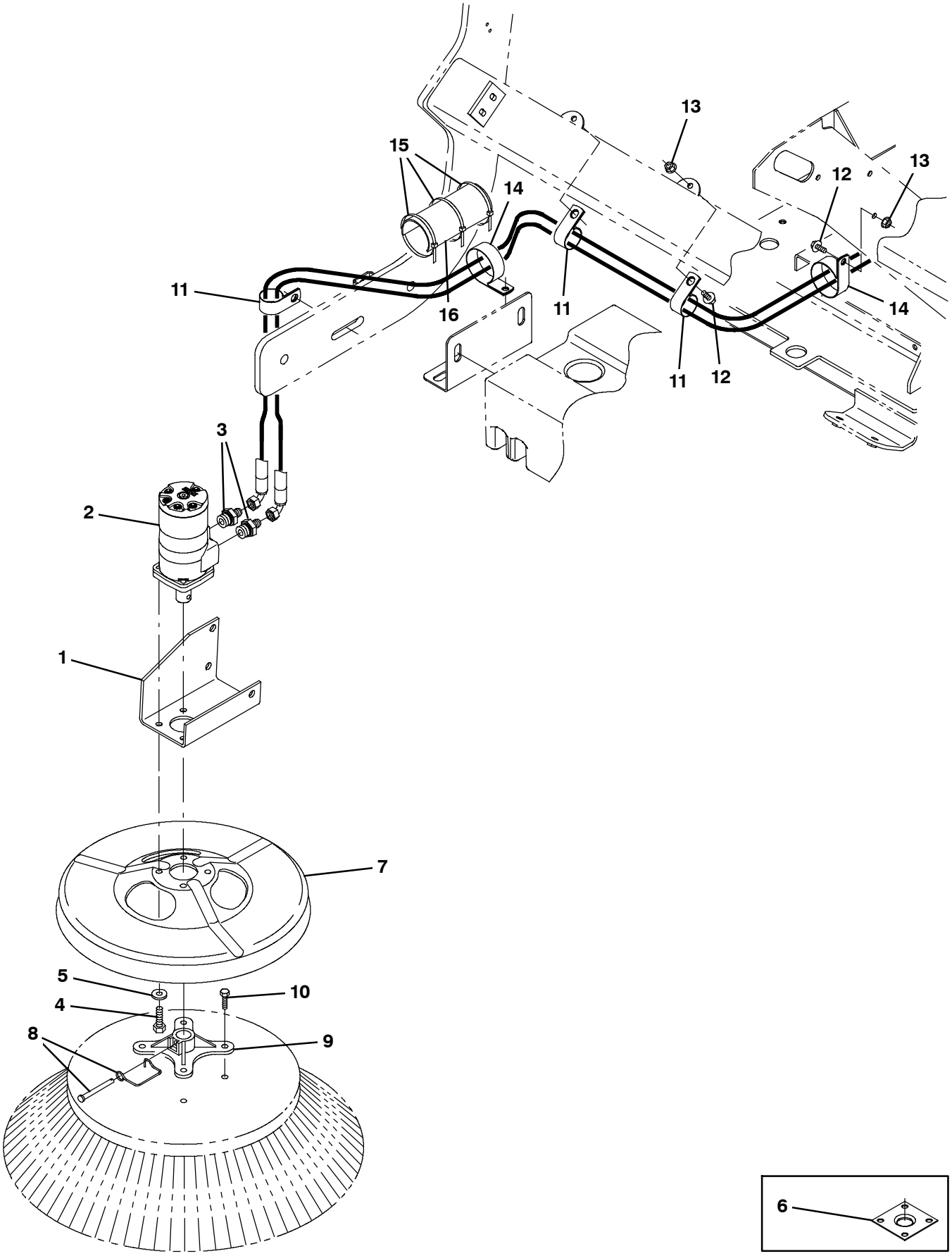

354741

Fig. 64 - Side Brush Motor Group, S30 XP

Ref.	Part No.	Serial Number	Description	Qty.
1	1029674	(000000-)	Bracket, Mtg, Motor, Side Brush	1
2	379607	(000000-002133)	Motor, Hyd, Gear, Int 17.9 Bi-Dir 1500 (See Breakdowns)	1
2	1057338	(002134-)	Motor, Hyd, Gear, Int 17.9 Bi-Dir 2500	1
3	47508	(000000-002999)	Fitting, Hyd, Str, Jm06/Om10	2
3	762439	(003000-)	Fitting, Hyd, Str, Fm06/Om10	2
4	46559	(000000-)	Screw, Hex, .38-16 X 1.25, Nl	4
5	32492	(000000-)	Washer, Flat, 0.38, Std	4
6	16082	(000000-002133)	Guard, String, Motor, Brush	1
7	1054256	(000000-)	Guard, Brush	1
8	84581	(000000-)	Pin Assy, Side Brush W/ Clip	1
9	47501	(000000-)	Hub, Adapter, Brush, 1.00b	1
10	39394	(000000-)	Screw, Hex, .31-09 X 1.25, Wood	4
11	53468	(000000-)	Clamp, Cable, Stl, 1.75d X 1.00w, 1hole	3
12	1037346	(000000-)	Screw, Hex, M8 X 1.25 X 25, 9.8, Sems	3
13	07791	(000000-)	Nut, Hex, Flng, M8 X 1.25	2
14	70157	(000000-)	Clamp, Cable, Ss, 2.50d X 1.00w, 1hole	2
15	44961	(000000-)	Tie, Cable, Nyl, 14.5l .30w 4.0 Max D	3
16	762179	(000000-)	Guard, Hose, Rbr, 5.0l	1

Fig. 65 - Side Brush Lift and Pivot Group, S30 XP

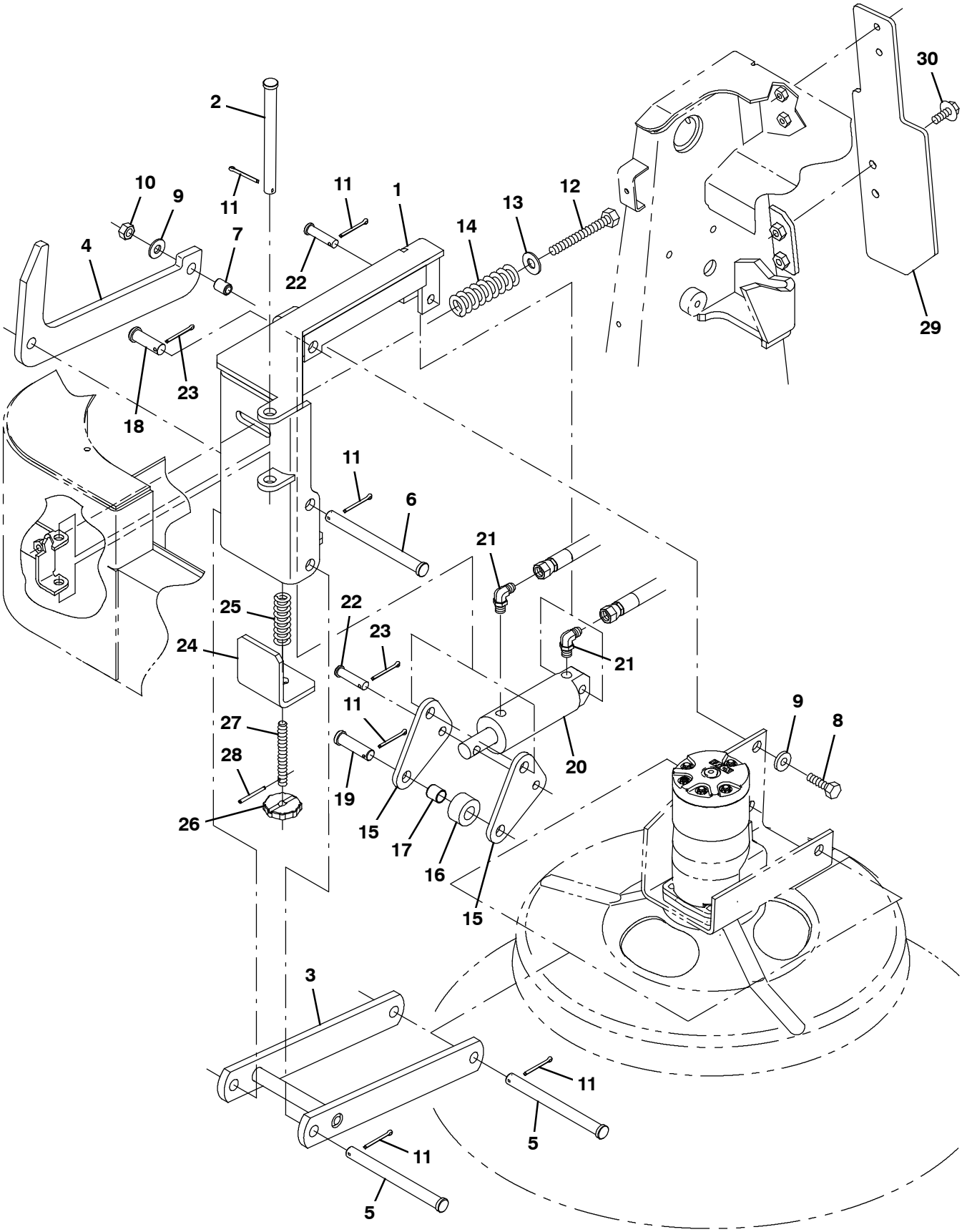

354738

Fig. 65 - Side Brush Lift and Pivot Group, S30 XP

Ref.	Part No.	Serial Number	Description	Qty.
1	1039628	(000000-)	Pivot Wldt, Brush, Side	1
2	222196	(000000-)	Pin, Clevis, 0.50d X 4.25l	1
3	1029682	(000000-)	Arm Wldt, Brush, Side	1
4	1026459	(000000-)	Arm, Linkage, Side Brush	1
5	51225	(000000-)	Pin, Clevis, 0.50d X 5.50l	2
6	51538	(000000-)	Pin, Clevis, 0.50d X 5.00l	1
7	80395	(000000-)	Sleeve, P/M, 0.31b 0.50d 0.7l [430ss]	1
8	76570	(000000-)	Screw, Hex, M8 X 1.25 X 30, 8.8	1
9	32491	(000000-)	Washer, Flat, 0.31, Std	2
10	08709	(000000-)	Nut, Hex, Lock, M8 X 1.25, Nl	1
11	08182	(000000-)	Pin, Cotter, .125 X 1.00	6
12	06963	(000000-)	Screw, Hex, M10 X 1.5 X 60, 8.8	1
13	32492	(000000-)	Washer, Flat, 0.38, Std	1
14	45261	(000000-)	Spring, Cmpr, 0.97od .11wir 02.5l	1
15	1026462	(000000-)	Lever, Lift, Brush	2
16	1026525	(000000-)	Tube, 0.59id 1.25od 00.6l, Stl	1
17	59634	(000000-)	Bushing, Sleeve, 0.50b 0.59d 0.62l, Fgl	1
18	51534	(000000-)	Pin, Clevis, 0.50d X 2.00l	1
19	43290	(000000-)	Pin, Clevis, 0.50d X 1.75l	1
20	1041034	(000000-)	Cylinder, Hyd, 1.5b 06.3l 01.50strk 2500	1
21	77097	(000000-002999)	Fitting, Hyd, E90, Jm04/Om04	2
21	762427	(003000-)	Fitting, Hyd, E90, Fm04/Om04	2
22	29558	(000000-)	Pin, Clevis, 0.37d X 1.50l	2
23	39005	(000000-)	Pin, Cotter, .094 X 0.75	2
24	1036333	(000000-)	Angle	1
25	22290	(000000-)	Spring, Cmpr, 0.72od .06wir 02.3l	1
26	1039141	(000000-)	Knob	1
27	1039199	(000000-)	Rod, Thrd, M10x1.5 80l	1
28	13865	(000000-)	Pin, Roll, .125d X 1.25l, .125/.129	1
29	1034501	(000000-002099)	Plate,Lift,Premium	1
29	1060764	(002100-)	Plate,Lift,Premium	1
30	1037354	(000000-)	Screw, Hex, M8 X 1.25 X 30, 9.8, Sems	4

Fig. 66 - Main Brush Lift Group, S30

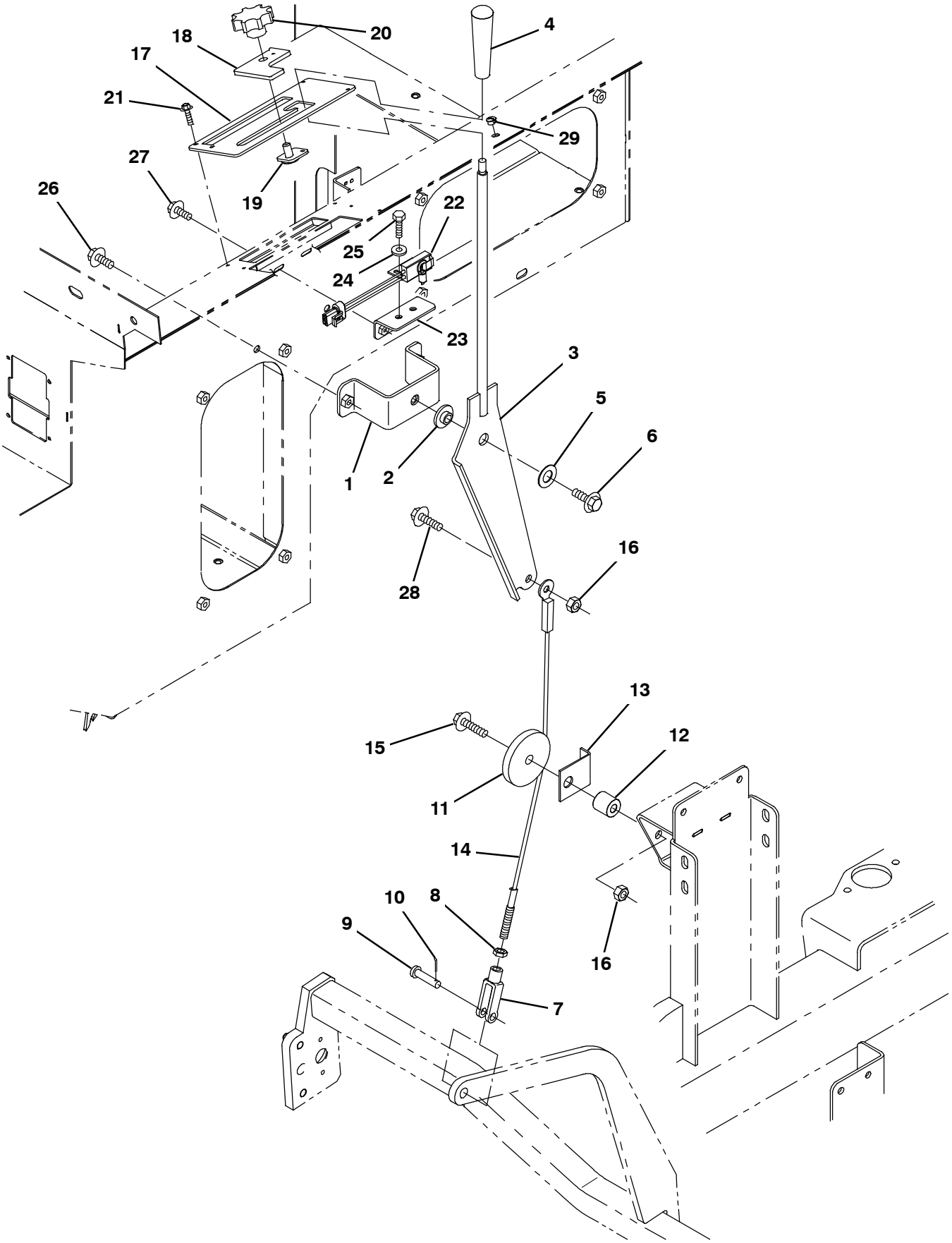

354700

Fig. 66 - Main Brush Lift Group, S30

Ref.	Part No.	Serial Number	Description	Qty.
1	1042785	(000000-)	Bracket, Lift	1
2	363087	(000000-)	Bushing, Flng, 0.44b 1.25d 0.25l	1
3	1041539	(000000-)	Lever Wldt, Lift, Brush, Main	1
4	54995	(000000-)	Knob, 1.12d 3.86l M10 X 1.5, Plstc Tpr]	1
5	07450	(000000-)	Bearing, Thrust, 0.66b 1.25d 0.06w	1
6	1037358	(000000-)	Screw, Hex, M10 X 1.50 X 35, 9.8, Sems	1
7	12267	(000000-)	Clevis, Adj, 0.38pin, M10x1.5	1
8	32716	(000000-)	Nut, Hex, Jam, M10 X 1.5, Ss	1
9	86240	(000000-)	Pin, Clevis, 0.38d X 1.13l	1
10	08179	(000000-)	Pin, Cotter, .094 X 1.00	1
11	379684	(000000-)	Pulley Assy, Cable, 2.8d 0.50b	1
12	222460	(000000-)	Sleeve, P/M, 0.31b 0.50d 0.5l [430ss]	1
13	379686	(000000-)	Angle, Keeper, Cable	1
14	1041123	(000000-)	Cable, Glv .19 24.5l .3 Eye / M10	1
15	1037355	(000000-)	Screw, Hex, M8 X 1.25 X 35, 9.8, Sems	1
16	08709	(000000-)	Nut, Hex, Lock, M8 X 1.25, Nl	1
17	1046048	(000000-)	Panel Wldt, Handle, Lift	1
18	1042855	(000000-)	Plate Wldt, Brush, Adj	1
19	1046052	(000000-)	Plate Wldt, Stop [S30]	1
20	383205	(000000-)	Knob, Star, 2.20d 8ear 1.1l M10x1.5, Nyl	1
21	1045964	(000000-)	Screw, Hex, M4 X 0.70 X 10, Fmg, Blk	4
22	1040019	(000000-)	Switch, Limit, 15a, Nc	1
23	1040753	(000000-)	Bracket, Switch	1
24	19066	(000000-)	Washer, Flat, 10	2
25	09244	(000000-)	Screw, Hex, M5 X 0.80 X 16, 8.8	2
26	1037346	(000000-)	Screw, Hex, M8 X 1.25 X 25, 9.8, Sems	2
27	1040467	(000000-)	Screw, Hex, M6 X 1.0 X 20, 9.8, Sems	2
28	1037354	(000000-)	Screw, Hex, M8 X 1.25 X 30, 9.8, Sems	1
29	33807	(000000-)	Plug, Hole, Rnd, 0.44h .03-.12, Blk Nyl	1

Fig. 67 - Main Brush Lift Group, S30 XP

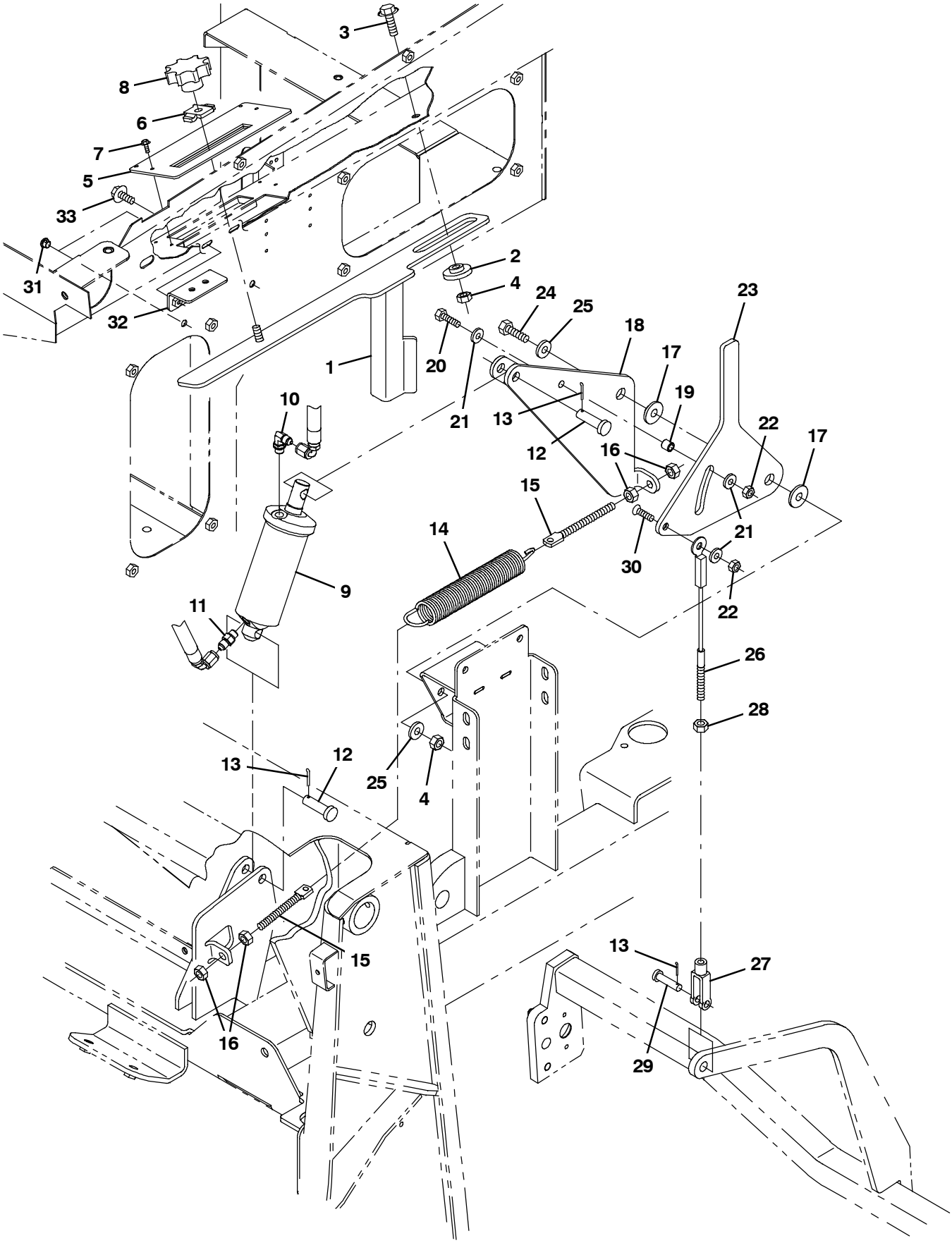

354749

Fig. 67 - Main Brush Lift Group, S30 XP

Ref.	Part No.	Serial Number	Description	Qty.
1	1032432	(000000-)	Plate Wldt, Brush, Adj	1
2	1032429	(000000-)	Retainer, Stop	1
3	1037358	(000000-)	Screw, Hex, M10 X 1.50 X 35, 9.8, Sems	1
4	41430	(000000-)	Nut, Hex, Lock, M10 X 1.5, Nl	2
5	1032449	(000000-)	Panel Wldt, Lift	1
6	1005740	(000000-)	Plate, Brush, Adj	1
7	1045964	(000000-)	Screw, Hex, M4 X 0.70 X 10, Fmg, Blk	4
8	383205	(000000-)	Knob, Star, 2.20d 8ear 1.1l M10x1.5, Nyl	1
9	1038176	(000000-)	Cylinder, Hyd, 2.0b 08.0l 04.00strk 2500	1
10	77097	(000000-002999)	Fitting, Hyd, E90, Jm04/Om04	1
10	762427	(003000-)	Fitting, Hyd, E90, Fm04/Om04	1
11	55586	(000000-002999)	Fitting, Hyd, Str, Jm04/Om04	1
11	762428	(003000-)	Fitting, Hyd, Str, Fm04/Om04	1
12	43290	(000000-)	Pin, Clevis, 0.50d X 1.75l	2
13	08182	(000000-)	Pin, Cotter, .125 X 1.00	3
14	368197	(000000-)	Spring, Extn, 1.39od 0.15wir 09.0l	1
15	1007220	(000000-)	Bolt, Eye, M10 X 1.50 X 117mm, 08.00 Eye	2
16	39312	(000000-)	Nut, Hex, Std, M10 X 1.50	4
17	363087	(000000-)	Bushing, Flng, 0.44b 1.25d 0.25l	2
18	1035400	(000000-)	Bracket Wldt, Mtg, Cyl	1
19	222460	(000000-)	Sleeve, P/M, 0.31b 0.50d 0.5l [430ss]	1
20	06955	(000000-)	Screw, Hex, M8 X 1.25 X 35, 8.8	1
21	32491	(000000-)	Washer, Flat, 0.31, Std	3
22	08709	(000000-)	Nut, Hex, Lock, M8 X 1.25, Nl	2
23	1041446	(000000-)	Bracket, Brush, Stop Adj	1
24	06962	(000000-)	Screw, Hex, M10 X 1.50 X 45, 8.8	1
25	32492	(000000-)	Washer, Flat, 0.38, Std	2
26	383194	(000000-)	Cable, Glv .19d 009.88l .38eye / M10	1
27	12267	(000000-)	Clevis, Adj, 0.38pin, M10x1.5	1
28	32716	(000000-)	Nut, Hex, Jam, M10 X 1.5, Ss	1
29	86240	(000000-)	Pin, Clevis, 0.38d X 1.13l	1
30	07810	(000000-)	Screw, Flt, Soc, M8 X 1.25 X 25, 10.9	1
31	01314	(000000-)	Plug, Hole, Rnd, 0.38h .03-.12, Blk Nyl	2
32	1040753	(000000-)	Bracket, Switch	1
33	1040467	(000000-)	Screw, Hex, M6 X 1.00 X 20, 9.8, Sems	2

Fig. 68 - Main Brush Drive Group

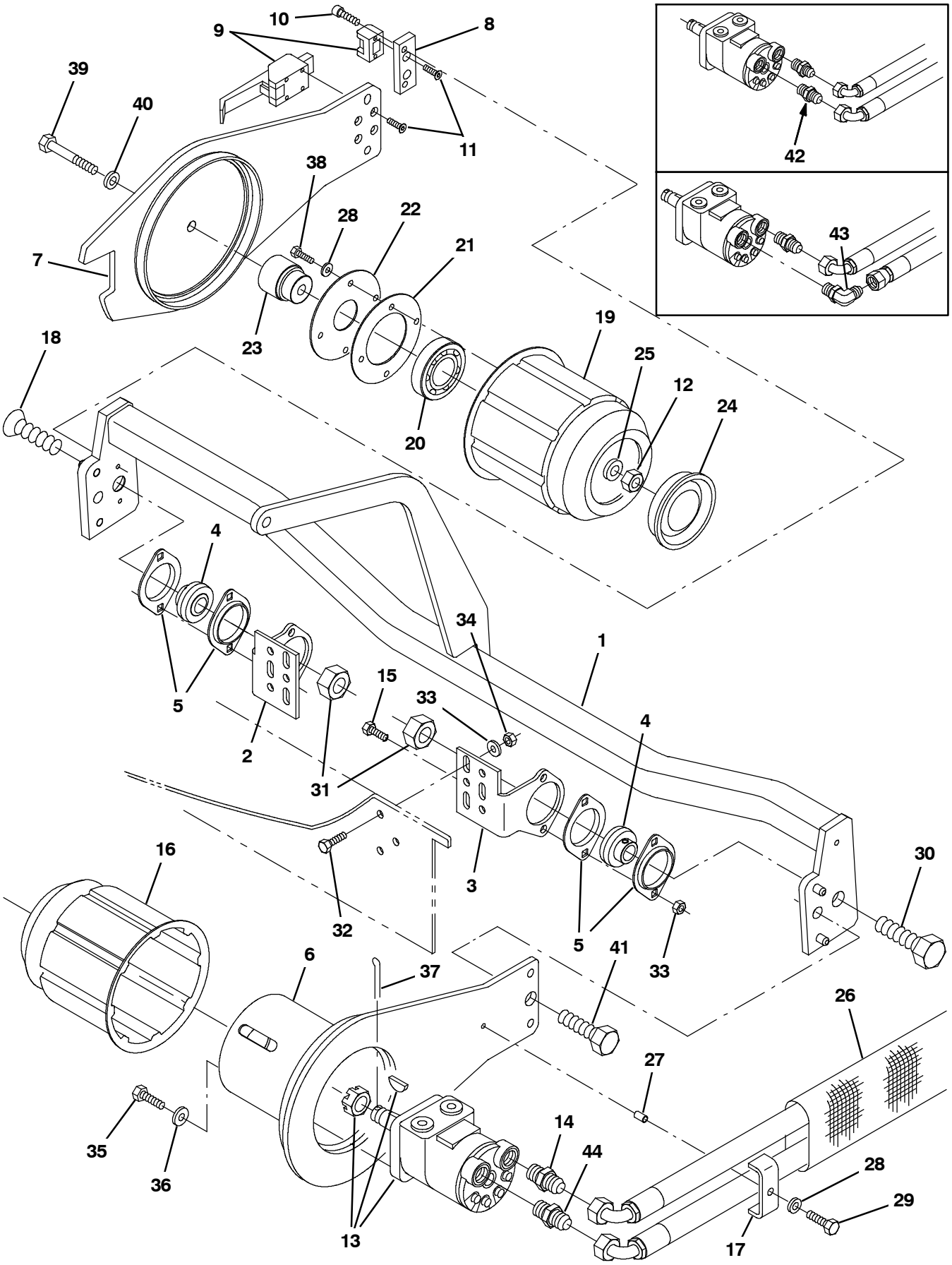

354701

Fig. 68 - Main Brush Drive Group

	Ref.	Part No.	Serial Number	Description	Qty.
	1	1039501	(000000-)	Tube Wldt	1
	2	383142	(000000-)	Bracket, Mtg, Rh	1
	3	383143	(000000-)	Bracket, Mtg, Lh	1
	4	25887	(000000-)	Bearing, W/ Collar, 0.75b 1.85d 1.06w	2
	5	35973	(000000-)	Flange, Brg, 1.9id 2h	4
	6	383139	(000000-)	Arm Wldt, Brush, Main, Drive, Lh	1
▽	7	377249	(000000-)	Arm, Brush, Main, W/ Label	1
▲		383203	(000000-)	Label, Info, Arm, Brush	1
	8	54204	(000000-)	Plate, Mtg	1
	9	54878	(000000-)	Latch, Cmpr, M5 X 0.8 Blk	1
	10	57824	(000000-)	Screw, Soc, M6 X 1.00 X 20, 12.9, Nl	2
	11	09120	(000000-)	Screw, Flt, Soc, M5 X 0.80 X 16, 10.9	6
	12	08711	(000000-)	Nut, Hex, Lock, M12 X 1.75, Nl	1
	13	379608	(000000-002133)	Motor, Hyd, Gear, Int 02.8 Bi-Dir 1500 (See Breakdowns)	1
	13	1057337	(002134-)	Motor, Hyd, Gear, Int 02.8 Bi-Dir 2500	1
	14	44869	(000000-002999)	Fitting, Hyd, Str, Jm08/Om08	1
	14	762445	(003000-)	Fitting, Hyd, Str, Fm08/Om08	1
	15	16931	(000000-)	Screw, Hex, M8 X 1.25 X 20, 8.8	4
	16	87631	(000000-002133)	Plug Wldt, Drive, Brush	1
	16	1057643	(002134-)	Plug Wldt, Drive, Brush	1
	17	51715	(000000-)	Bracket, U, .19, 2.8w 0.9 1.0l, 1/0.3h	1
	18	1007807	(000000-)	Screw, Flt, Soc, .75-10 X 2.50, Al	1
	19	55779	(000000-)	Plug Wldt, Idler, Brush	1
	20	24899	(000000-)	Bearing, Ball, 1.38b 2.83d 0.67w	1
	21	30252	(000000-)	Disc, 0.08, 04.39d 02.56b, 4/.28h 3.8bc	1
	22	30253	(000000-)	Disc, 0.06, 04.39d 01.67b, 4/.30h 3.8bc	1
	23	30251	(000000-)	Shaft, Idler, Plug, Brush	1
	24	30255	(000000-)	Cap, Vinyl, 3.28d 0.45l	1
	25	51564	(000000-)	Washer, Flat, 0.53b 1.75d .12, Stl, Pl	1
	26	13773	(000000-)	Sleeve, Nyl, #27 20.0l	1
	27	56228	(000000-)	Tube, Plstc, 0.25id 0.31od 00.5l, Blk	1
	28	01684	(000000-)	Washer, Flat, 0.27b 0.69d .05, Ss	1
	29	07805	(000000-)	Screw, Hex, M6 X 1.00 X 35, Ss	1
	30	39395	(000000-)	Screw, Hex, .75-10 X 2.50, Fl	1
	31	32987	(000000-)	Nut, Hex, Lock, .75-10, Nl	2
	32	09010	(000000-)	Screw, Hex, M8 X 1.25 X 25, Ss	6
	33	08709	(000000-)	Nut, Hex, Lock, M8 X 1.25, Nl	10
	34	41186	(000000-)	Washer, Flat, Belleville, .31	3
	35	01762	(000000-)	Screw, Hex, .38-16 X 0.75, Nl	4
	36	32485	(000000-)	Washer, Flat, 0.38, Sae	4
	37	08175	(000000-)	Pin, Cotter, .125 X 1.25	1
	38	12277	(000000-)	Screw, Hex, M6 X 1.00 X 20, Nl, Ss	4
	39	06975	(000000-)	Screw, Hex, M12 X 1.75 X 90, 8.8	1
	40	36328	(000000-)	Washer, Flat, Belleville, .50	1
	41	06977	(000000-)	Screw, Hex, M16 X 2.00 X 20, 8.8	1
	42	44869	(000000-001312)	Fitting, Hyd, Str, Jm08/Om08	1
	43	1046890	(001313-002999)	Fitting, Hyd, E90, Jm08/Om08, Med	1
	43	1067052	(003000-003440)	Fitting, Hyd, E90, Fm08/Om08, Med	1
	44	762445	(003441-)	Fitting, Hyd, Str, Fm08/Om08	1

Fig. 69 - Hydraulic Schematic

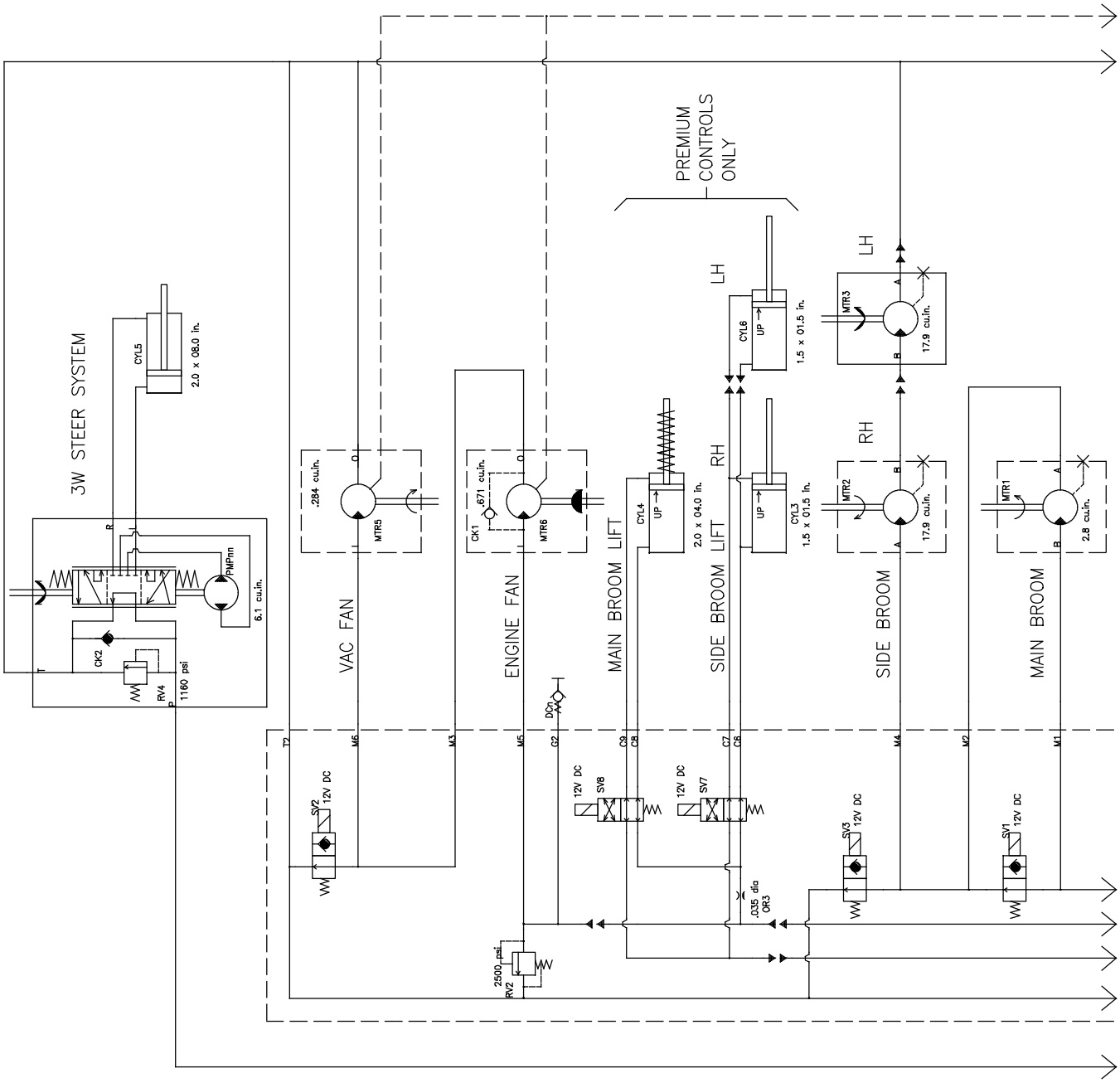

1027521- 354734

Fig. 69 - Hydraulic Schematic

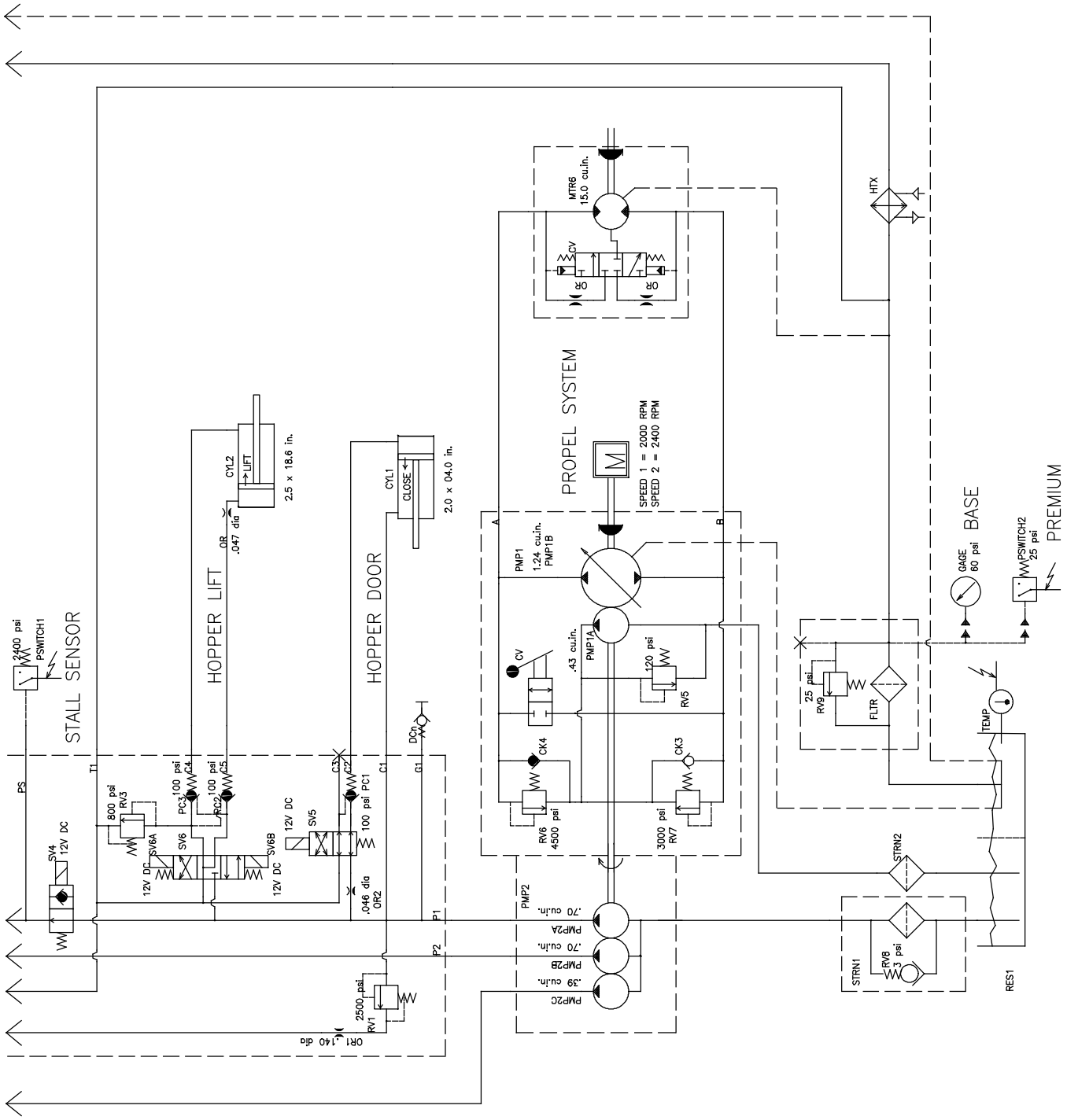

1027521- 354734

Fig. 70 - Hydraulic Hose Group, S30 (000000-002999)

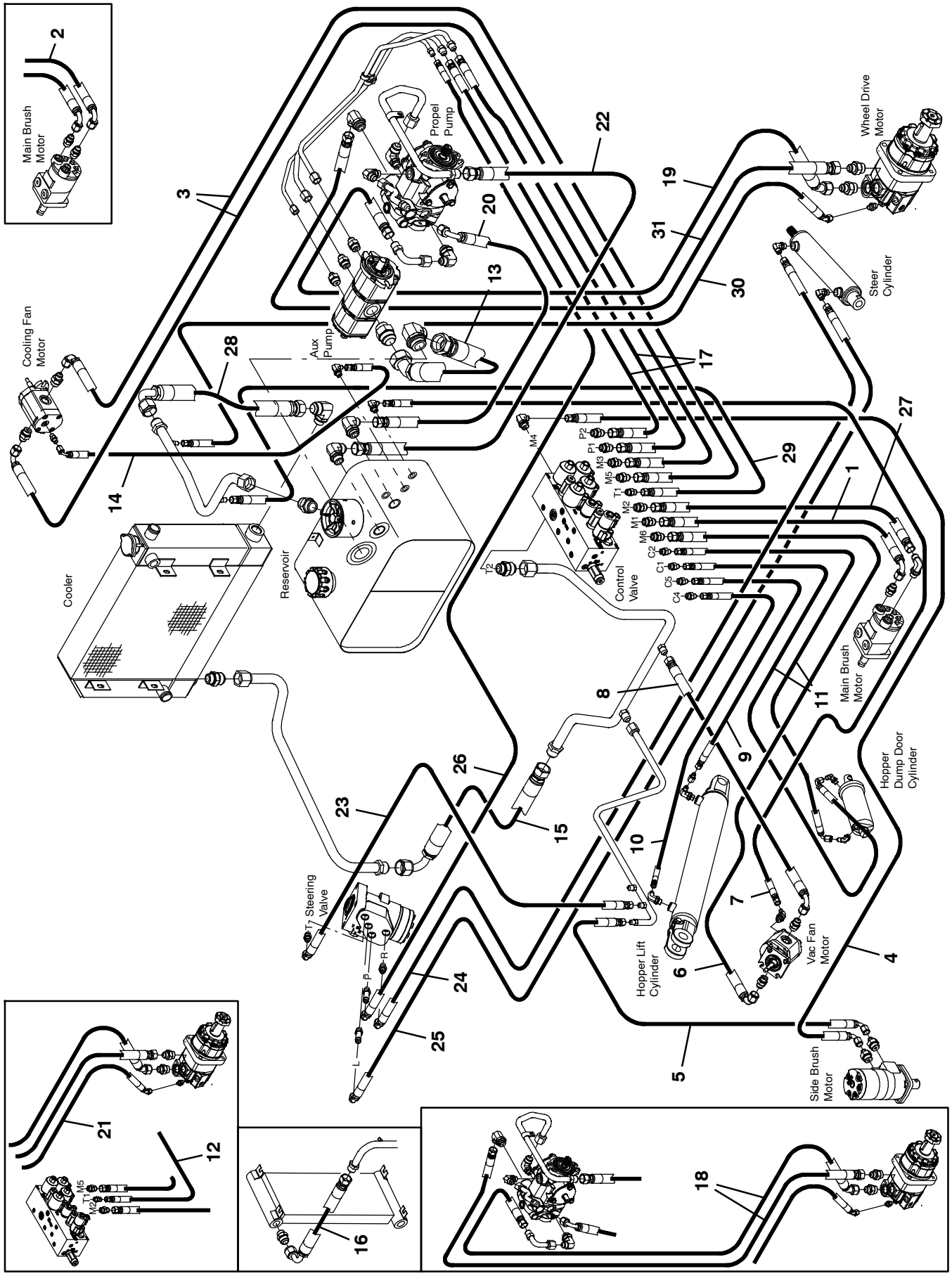

354737

Fig. 70 - Hydraulic Hose Group, S30 (000000-002999)

Ref.	Part No.	Serial Number	Description	Qty.
1	1039753	(000000-002999)	Hose, Hyd, Tc08, Jf08str/Jf08e90, 42.0	1
2	1041383	(000000-001312)	Hose, Hyd, Tc08, Jf08e90/Jf08str, 40.0	1
3	1041386	(000000-002999)	Hose, Hyd, Tc08, Jf08e90/Jf08str, 52.0	2
4	396213	(000000-002999)	Hose, Hyd, Tc06, Jf06e90/Jf06str, 134.0	1
5	1041941	(000000-002999)	Hose, Hyd, Tc06, Jf06e90/Jf06str, 86.0	1
6	1023486	(000000-002999)	Hose, Hyd, Tc08, Jf08e90/Jf08str, 034.0	1
7	1041385	(000000-002999)	Hose, Hyd, Med04, Jf04str/Jf04str, 37.0	1
8	381857	(000000-002999)	Hose, Hyd, Tc08, Jf08e90/Jf08str, 018.0	1
9	381865	(000000-002999)	Hose, Hyd, Tc04, Jf04str/Jf04str, 018.0	1
10	1025990	(000000-002999)	Hose, Hyd, Tc04, Jf04str/Jf04str, 039.0	1
11	21119	(000000-002999)	Hose, Hyd, Tc04, Jf04e90/Jf04str, 092.0	2
12	1041392	(000000-002099)	Hose, Hyd, Tc06, Jf06e90/Jf06str, 50.0	1
13	77473	(000000-002999)	Hose, Hyd, Suc20, Jf20e45/Jf20str, 022.5	1
14	87672	(000000-002999)	Hose, Hyd, Med04, Jf04e45/Jf04str, 038.0	1
15	1033670	(000000-002999)	Hose, Hyd,Med, Jf16str/Jf16e90, 16.0	1
16	1046121	(000000-002099)	Hose, Hyd, Med16, Jf16e90/Jf16str, 19.0	1
17	1036185	(000000-002999)	Hose, Hyd, Tc08, Jf08str/Jf08str, 37.0	2
18	9008697	(000000-002687)	Hose Kit, Rear Drive, Replmt	1
19	1065453	(002688-002999)	Hose, Hyd, Spcl, Ff10e45/Ff10str, 56.0	1
20	1039586	(000000-002999)	Hose, Hyd, Med10, Jf10e90/Jf10str, 27.0	1
21	1036193	(000000-002099)	Hose, Med04, Jf04e45/Jf04str, 86.0	1
22	1036194	(000000-002999)	Hose, Hyd, Suc12, Jf12str/Jf12str, 27.0	1
23	9000351	(000000-002999)	Hose, Hyd, Tc06, Jf06e90/Jf06str, 028.0	1
24	396234	(000000-002999)	Hose, Hyd, Tc06, Jf06e90/Jf06str, 062.0	1
25	1037162	(000000-002999)	Hose, Hyd, Tc06, Jf06e90/Jf06str, 54.0	1
26	1036906	(000000-002999)	Hose, Hyd, Tc06, Jf06str/Jf06e90, 080.0	1
27	365009	(001313-002999)	Hose, Hyd, Tc08, Jf08str/Jf08str, 040.0	1
28	1033670	(002100-002999)	Hose, Hyd, Med16, Jf16e90/Jf16str, 016.0	1
29	377235	(002100-002999)	Hose, Hyd, Tc06, Jf06str/Jf06str, 048.0	1
30	65206	(002100-002999)	Hose, Hyd, Med04, Jf04e45/Jf04str, 078.0	1
31	1065452	(002688-002999)	Hose, Hyd, Spcl, Ff10str/Ff10str, 046.0	1

Fig. 71 - Hydraulic Hose Group, S30 (003000-)

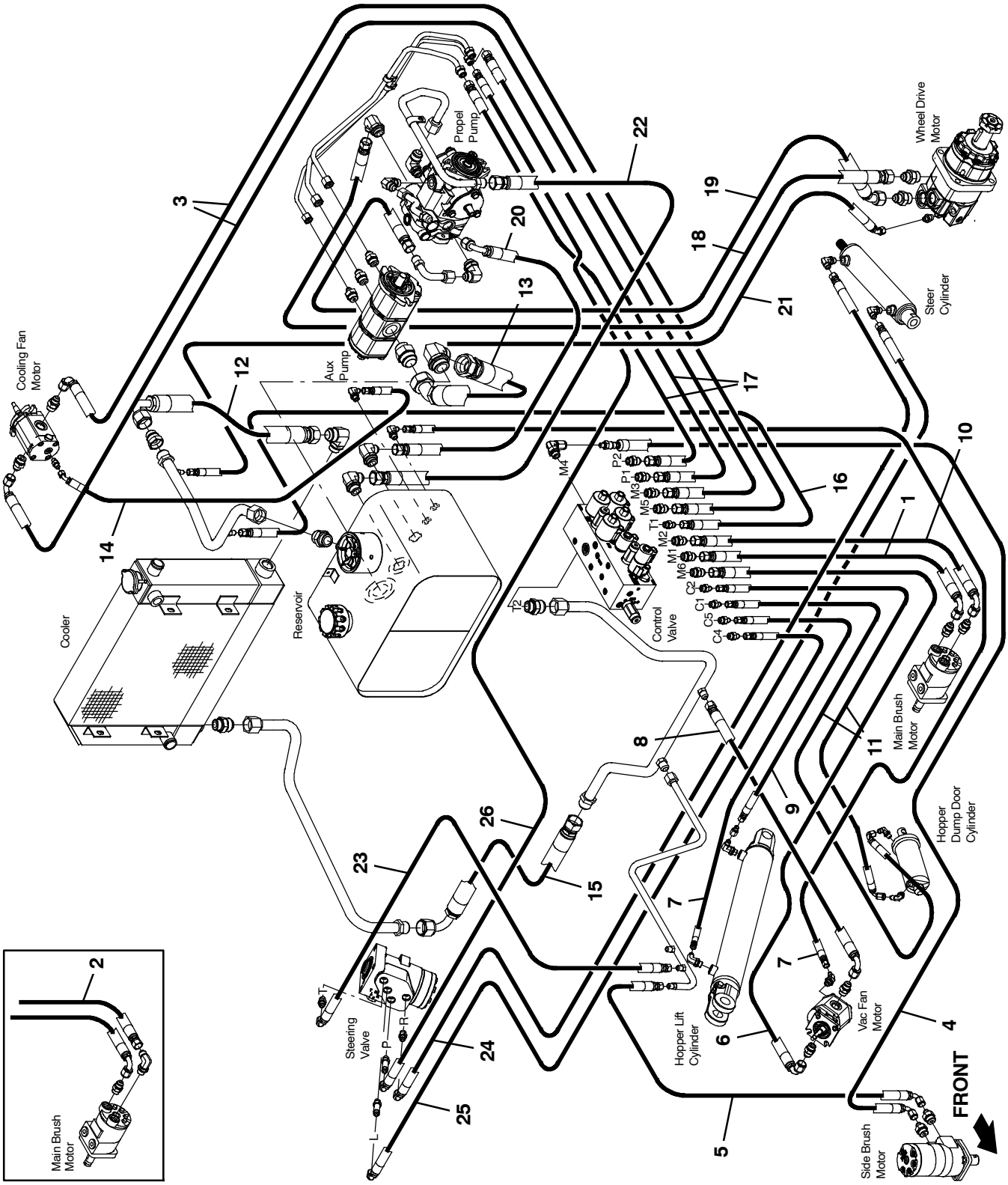

354737

Fig. 71 - Hydraulic Hose Group, S30 (003000-)

Ref.	Part No.	Serial Number	Description	Qty.
1	1067109	(003000-)	Hose, Hyd, Tc08, Ff08e90/Ff08str, 042.0	1
2	1067112	(003000-03440)	Hose, Hyd, Tc08, Ff08str/Ff08str, 040.0	1
3	1067110	(003000-)	Hose, Hyd, Tc08, Ff08e90/Ff08str, 052.0	2
4	1067105	(003000-005699)	Hose, Hyd, Tc06, Ff06e90/Ff06str, 134.0	1
4	9011154	(005700-)	Hose Kit, Hyd, Replmt [S30]	1
5	1067104	(003000-)	Hose, Hyd, Tc06, Ff06e90/Ff06str, 086.0	1
6	1067108	(003000-)	Hose, Hyd, Tc08, Ff08e90/Ff08str, 034.0	1
7	1067090	(003000-)	Hose, Hyd, Tc04, Ff04str/Ff04str, 037.0	2
8	1067107	(003000-)	Hose, Hyd, Tc08, Ff08e90/Ff08str, 018.0	1
9	1067089	(003000-)	Hose, Hyd, Tc04, Ff04str/Ff04str, 018.0	1
10	1067109	(003441-)	Hose, Hyd, Tc08, Ff08e90/Ff08str, 042.0	1
11	1067087	(003000-)	Hose, Hyd, Tc04, Ff04e90/Ff04str, 092.0	2
12	1067115	(003000-005699)	Hose, Hyd, Tc16, Ff16e90/Ff16str, 016.0	1
12	1072633	(005700-)	Hose, Hyd, Tc12, Ff12e90/Ff12str, 014.0	1
13	1067300	(003000-)	Hose, Hyd, Suc20, Ff20e45/Ff20str, 022.5	1
14	1067083	(003000-)	Hose, Hyd, Tc04, Ff04e45/Ff04str, 038.0	1
15	1067115	(003000-)	Hose, Hyd, Tc16, Ff16e90/Ff16str, 016.0	1
16	1067106	(003000-)	Hose, Hyd, Tc06, Ff06str/Ff06str, 048.0	1
17	1072531	(003000-)	Hose, Hyd, Tc08, Ff08str/Ff08str, 041.0	2
18	1065452	(003000-)	Hose, Hyd, Spcl, Ff10str/Ff10str, 046.0	1
19	1065453	(003000-)	Hose, Hyd, Spcl, Ff10e45/Ff10str, 056.0	1
20	1067113	(003000-)	Hose, Hyd, Tc10, Ff10e90/Ff10str, 027.0	1
21	1067084	(003000-)	Hose, Hyd, Tc04, Ff04e45/Ff04str, 078.0	1
22	1067299	(003000-)	Hose, Hyd, Suc12, Ff12str/Ff12str, 025.0	1
23	1067097	(003000-)	Hose, Hyd, Tc06, Ff06e90/Ff06str, 028.0	1
24	1067101	(003000-)	Hose, Hyd, Tc06, Ff06e90/Ff06str, 062.0	1
25	1067099	(003000-)	Hose, Hyd, Tc06, Ff06e90/Ff06str, 054.0	1
26	1067102	(003000-)	Hose, Hyd, Tc06, Ff06e90/Ff06str, 080.0	1

Fig. 72 - Hydraulic Hose Group, S30 XP (000000-002999)

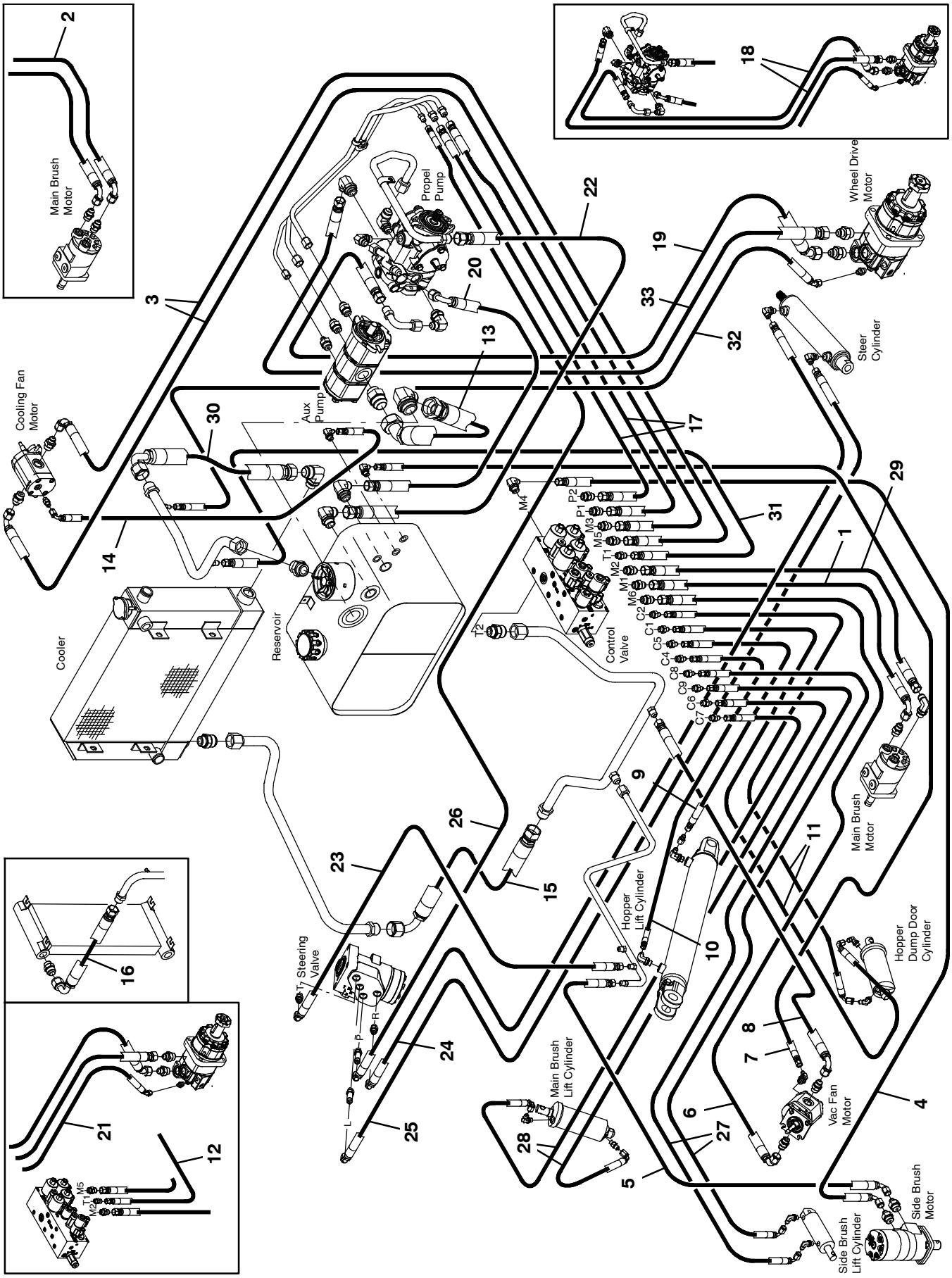

354748

Fig. 72 - Hydraulic Hose Group, S30 XP (000000-002999)

Ref.	Part No.	Serial Number	Description	Qty.
1	1039753	(000000-002999)	Hose, Hyd, Tc08, Jf08str/Jf08e90, 42.0	1
2	1041383	(000000-001312)	Hose, Hyd, Tc08, Jf08e90/Jf08str, 40.0	1
3	1041386	(000000-002999)	Hose, Hyd, Tc08, Jf08e90/Jf08str, 52.0	2
4	396213	(000000-002999)	Hose, Hyd, Tc06, Jf06e90/Jf06str, 134.0	1
5	1041941	(000000-002999)	Hose, Hyd, Tc06, Jf06e90/Jf06str, 86.0	1
6	1023486	(000000-002999)	Hose, Hyd, Tc08, Jf08e90/Jf08str, 034.0	1
7	1041385	(000000-002999)	Hose, Hyd, Med04, Jf04str/Jf04str, 37.0	1
8	381857	(000000-002999)	Hose, Hyd, Tc08, Jf08e90/Jf08str, 018.0	1
9	381865	(000000-002999)	Hose, Hyd, Tc04, Jf04str/Jf04str, 018.0	1
10	1025990	(000000-002999)	Hose, Hyd, Tc04, Jf04str/Jf04str, 039.0	1
11	21119	(000000-002999)	Hose, Hyd, Tc04, Jf04e90/Jf04str, 092.0	2
12	1041392	(000000-002099)	Hose, Hyd, Tc06, Jf06e90/Jf06str, 50.0	1
13	77473	(000000-002999)	Hose, Hyd, Suc20, Jf20e45/Jf20str, 022.5	1
14	87672	(000000-002999)	Hose, Hyd, Med04, Jf04e45/Jf04str, 038.0	1
15	1033670	(000000-002999)	Hose, Hyd,Med, Jf16str/Jf16e90, 16.0	1
16	1046121	(000000-002099)	Hose, Hyd, Med16, Jf16e90/Jf16str, 19.0	1
17	1036185	(000000-002999)	Hose, Hyd, Tc08, Jf08str/Jf08str, 37.0	2
18	9008697	(000000-002687)	Hose Kit, Rear Drive, Replmt	1
19	1065453	(002688-002999)	Hose, Hyd, Spcl, Ff10e45/Ff10str, 56.0	1
20	1039586	(000000-002999)	Hose, Hyd, Med10, Jf10e90/Jf10str, 27.0	1
21	1036193	(000000-002099)	Hose, Med04, Jf04e45/Jf04str, 86.0	1
22	1036194	(000000-002999)	Hose, Hyd, Suc12, Jf12str/Jf12str, 27.0	1
23	9000351	(000000-002999)	Hose, Hyd, Tc06, Jf06e90/Jf06str, 028.0	1
24	396234	(000000-002999)	Hose, Hyd, Tc06, Jf06e90/Jf06str, 062.0	1
25	1037162	(000000-002999)	Hose, Hyd, Tc06, Jf06e90/Jf06str, 54.0	1
26	1036906	(000000-002999)	Hose, Hyd, Tc06, Jf06str/Jf06e90, 080.0	1
27	1036201	(000000-002999)	Hose, Hyd, Tc04, Jf04e90/Jf04str, 126.0	2
28	1029061	(000000-002999)	Hose, Hyd, Tc04, Jf04e90/Jf04str, 042.0	2
29	365009	(001313-002999)	Hose, Hyd, Tc08, Jf08str/Jf08str, 040.0	1
30	1033670	(002100-002999)	Hose, Hyd, Med16, Jf16e90/Jf16str, 016.0	1
31	377235	(002100-002999)	Hose, Hyd, Tc06, Jf06str/Jf06str, 048.0	1
32	65206	(002100-002999)	Hose, Hyd, Med04, Jf04e45/Jf04str, 078.0	1
33	1065452	(002688-002999)	Hose, Hyd, Spcl, Ff10str/Ff10str, 046.0	1

Fig. 73 - Hydraulic Hose Group, S30 XP (003000-)

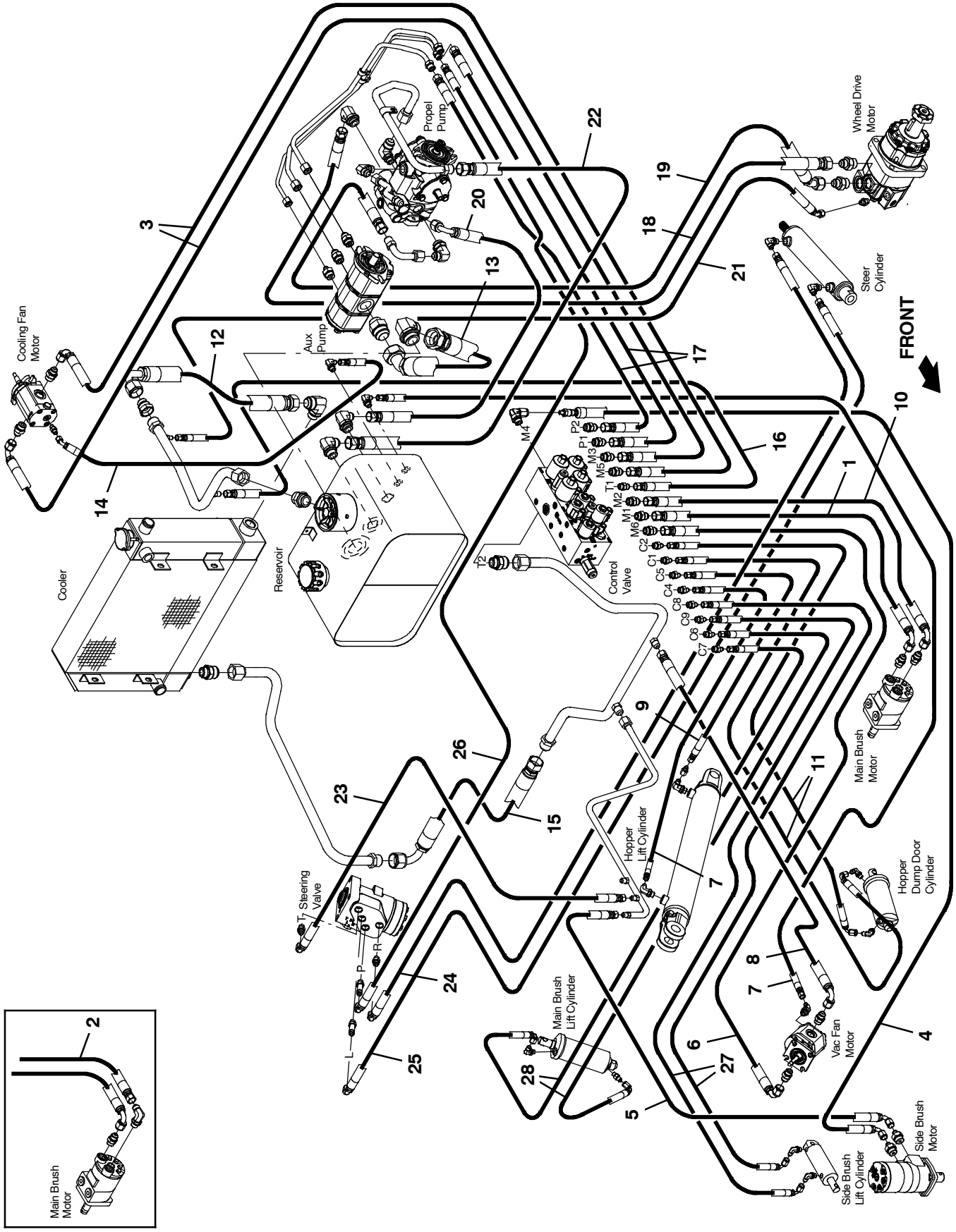

354748

Fig. 73 - Hydraulic Hose Group, S30 XP (003000-)

Ref.	Part No.	Serial Number	Description	Qty.
1	1067109	(003000-)	Hose, Hyd, Tc08, Ff08e90/Ff08str, 042.0	1
2	1067112	(003000-003440)	Hose, Hyd, Tc08, Ff08str/Ff08str, 040.0	1
3	1067110	(003000-)	Hose, Hyd, Tc08, Ff08e90/Ff08str, 052.0	2
4	1067105	(003000-005699)	Hose, Hyd, Tc06, Ff06e90/Ff06str, 134.0	1
4	9011154	(005700-)	Hose Kit, Hyd, Replmt [S30]	1
5	1067104	(003000-)	Hose, Hyd, Tc06, Ff06e90/Ff06str, 086.0	1
6	1067108	(003000-)	Hose, Hyd, Tc08, Ff08e90/Ff08str, 034.0	1
7	1067090	(003000-)	Hose, Hyd, Tc04, Ff04str/Ff04str, 037.0	2
8	1067107	(003000-)	Hose, Hyd, Tc08, Ff08e90/Ff08str, 018.0	1
9	1067089	(003000-)	Hose, Hyd, Tc04, Ff04str/Ff04str, 018.0	1
10	1067109	(003441-)	Hose, Hyd, Tc08, Ff08e90/Ff08str, 042.0	1
11	1067087	(003000-)	Hose, Hyd, Tc04, Ff04e90/Ff04str, 092.0	2
12	1067115	(003000-005699)	Hose, Hyd, Tc16, Ff16e90/Ff16str, 016.0	1
12	1072633	(005700-)	Hose, Hyd, Tc12, Ff12e90/Ff12str, 014.0	1
13	1067300	(003000-)	Hose, Hyd, Suc20, Ff20e45/Ff20str, 022.5	1
14	1067083	(003000-)	Hose, Hyd, Tc04, Ff04e45/Ff04str, 038.0	1
15	1067115	(003000-)	Hose, Hyd, Tc16, Ff16e90/Ff16str, 016.0	1
16	1067106	(003000-)	Hose, Hyd, Tc06, Ff06str/Ff06str, 048.0	1
17	1072531	(003000-)	Hose, Hyd, Tc08, Ff08str/Ff08str, 041.0	2
18	1065452	(003000-)	Hose, Hyd, Spcl, Ff10str/Ff10str, 046.0	1
19	1065453	(003000-)	Hose, Hyd, Spcl, Ff10e45/Ff10str, 056.0	1
20	1067113	(003000-)	Hose, Hyd, Tc10, Ff10e90/Ff10str, 027.0	1
21	1067084	(003000-)	Hose, Hyd, Tc04, Ff04e45/Ff04str, 078.0	1
22	1067299	(003000-)	Hose, Hyd, Suc12, Ff12str/Ff12str, 025.0	1
23	1067097	(003000-)	Hose, Hyd, Tc06, Ff06e90/Ff06str, 028.0	1
24	1067101	(003000-)	Hose, Hyd, Tc06, Ff06e90/Ff06str, 062.0	1
25	1067099	(003000-)	Hose, Hyd, Tc06, Ff06e90/Ff06str, 054.0	1
26	1067102	(003000-)	Hose, Hyd, Tc06, Ff06e90/Ff06str, 080.0	1
27	1067088	(003000-)	Hose, Hyd, Tc04, Ff04e90/Ff04str, 126.0	2
28	1067086	(003000-)	Hose, Hyd, Tc04, Ff04e90/Ff04str, 042.0	2

Fig. 74 - Hydraulic Reservoir Group

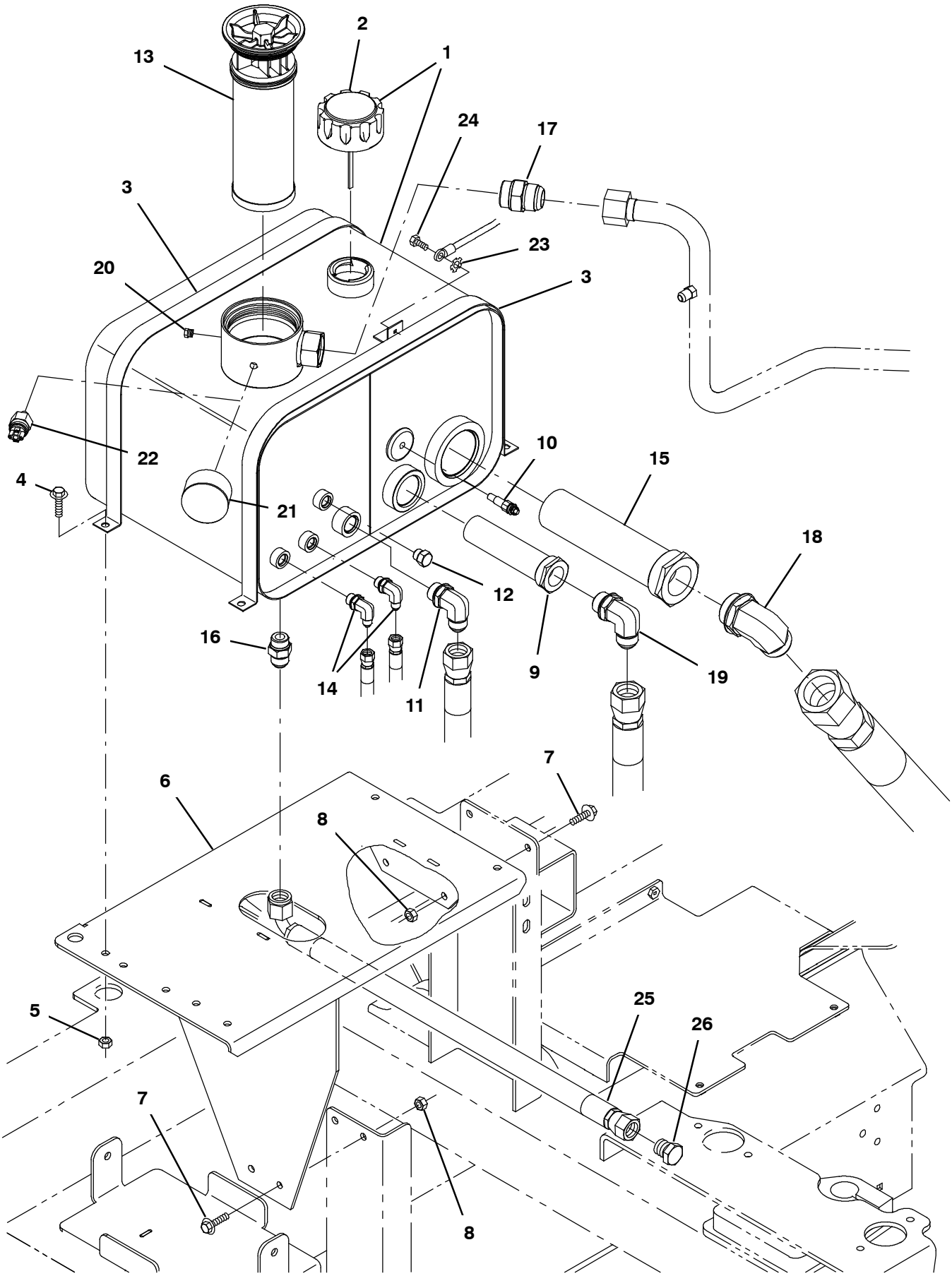

354676

Fig. 74 - Hydraulic Reservoir Group

	Ref.	Part No.	Serial Number	Description	Qty.
▽	1	9004518	(000000-)	Reservoir, Hyd, W/ Label, Replmt	1
▲	2	25122	(000000-)	Cap, Breather, Hyd, 2.4 Ds	1
▲	2	1018289	(000000-)	Cap, Breather, Hyd (CE Only)	1
	3	1032915	(000000-)	Strap, Tank, Hyd	2
	4	1037354	(000000-)	Screw, Hex, M8 X 1.25 X 30, 9.8, Sems	2
	5	08709	(000000-)	Nut, Hex, Lock, M8 X 1.25, Nl	4
	6	1045125	(000000-)	Bracket Wldt, Reservoir, Hyd	1
	7	1037346	(000000-)	Screw, Hex, M8 X 1.25 X 25, 9.8, Sems	4
	8	07791	(000000-)	Nut, Hex, Flng, M8 X 1.25	4
	9	361023	(000000-)	Strainer, Hyd, 010gpm 100mesh	1
	10	58592	(000000-)	Send-Unit, Water, Temp,04npt[113oh/195d]	1
	11	53076	(000000-002999)	Fitting, Hyd, E90, Jm10/Om12	1
	11	762469	(003000-)	Fitting, Hyd, E90, Fm10/Om12	1
	12	46482	(000000-)	Fitting, Hyd, Plug, Om06	1
	13	1021579	(000000-)	Filter Assy, Hyd, 10mic	1
	14	47638	(000000-002999)	Fitting, Hyd, E90, Jm04/Om06	2
	14	762425	(003000-)	Fitting, Hyd, E90, Fm04/Om06	2
	15	31613	(000000-)	Strainer, Hyd, 025gpm 100mesh 03psi	1
	16	46480	(000000-002999)	Fitting, Hyd, Str, Jm10/Om10	1
	16	762463	(003000-)	Fitting, Hyd, Str, Fm10/Om10	1
	17	52929	(000000-002999)	Fitting, Hyd, Str, Jm16/Om16	1
	17	762481	(003000-)	Fitting, Hyd, Str, Fm16/Om16	1
	18	73109	(000000-002999)	Fitting, Hyd, E90, Jm20/Om20	1
	18	762484	(003000-)	Fitting, Hyd, E90, Fm20/Om20	1
	19	46481	(000000-002999)	Fitting, Hyd, E90, Jm12/Om12	1
	19	762492	(003000-)	Fitting, Hyd, E90, Fm12/Om12	1
	20	63511	(000000-)	Fitting, Hyd, Plug, Pm02	1
	21	1025132	(000000-)	Indicator, Press, 60psi (S30 only)	1
	22	1025133	(000000-)	Switch, Press, Hyd, 18-24psi, Spst, No (S30XP only)	1
	23	32982	(000000-)	Washer, Lock, Int, 0.25	1
	24	222158	(000000-)	Screw, Hex, M6 X 1.00 X 10, Fmg	1
	25	1036199	(000000-002999)	Hose, Hyd, Tc10, Jf10e90/Jf10str, 42.0	1
	25	1067773	(003000-)	Hose, Hyd, Tc10, Ff10e90/Ff10str, 42.0	1
	26	1043066	(000000-002999)	Fitting, Hyd, Plug, Jm10	1
	26	762156	(003000-)	Fitting, Hyd, Plug, Fm10	1

Fig. 75 - Hydraulic Cooler and Tubes Group (000000-002099)

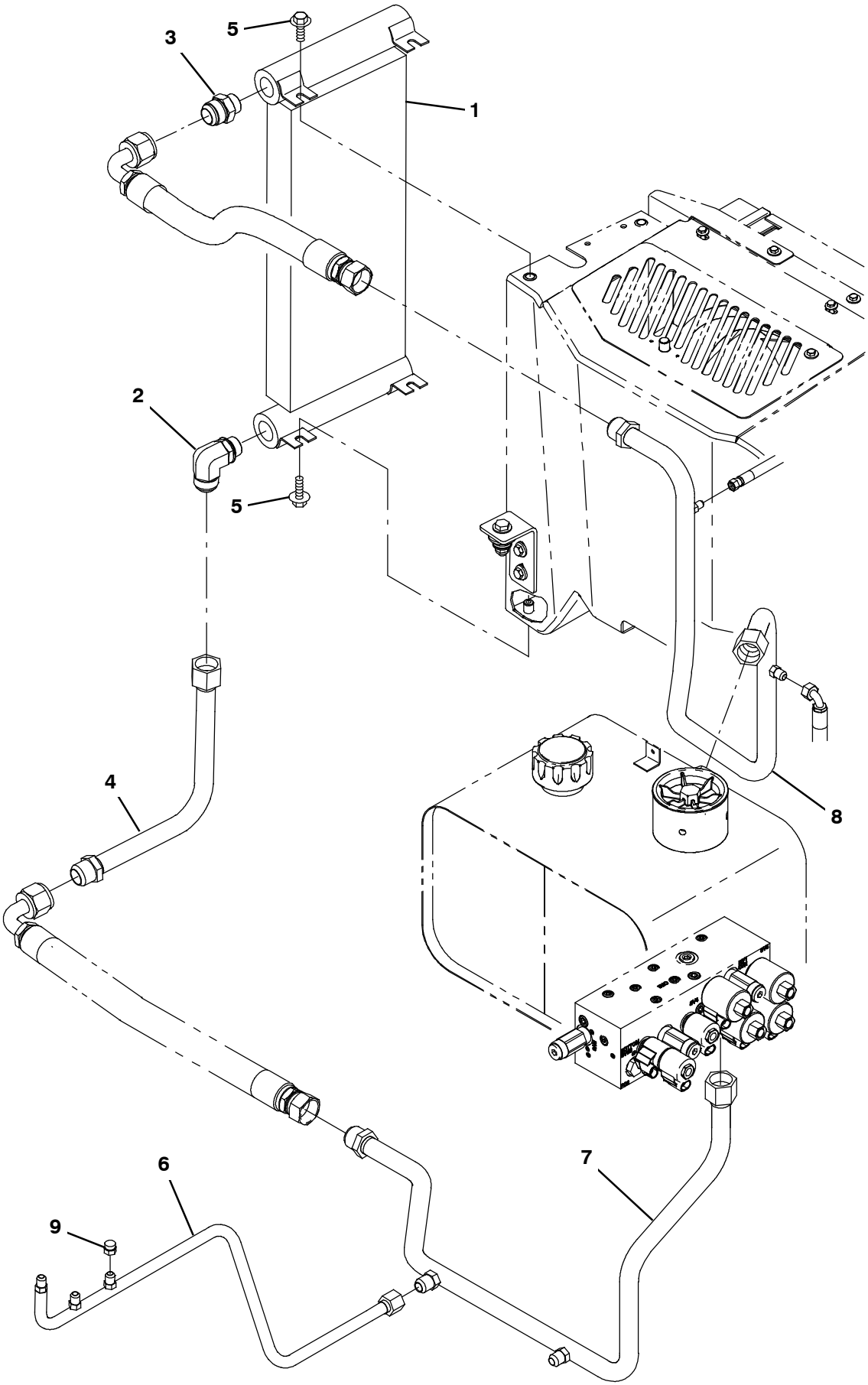

354714

Fig. 75 - Hydraulic Cooler and Tubes Group (000000-002099)

Ref.	Part No.	Serial Number	Description	Qty.
1	1028560	(000000-002099)	Cooler, Hyd, 18gpm 400btu Of12 20x8x2	1
2	52142	(000000-002099)	Fitting, Hyd, E90, Jm16/Om12	1
3	34357	(000000-002099)	Fitting, Hyd, Str, Jm16/Om12	1
4	1031051	(000000-002099)	Tube Assy, Hyd, Cooler [Coyote]	1
5	1037346	(000000-002099)	Screw, Hex, M8 X 1.25 X 25, 9.8, Sems	4
6	1033788	(000000-002099)	Tube, Hyd, Steering Drain	1
7	1030498	(000000-002099)	Tube Assy, Hyd, Valve Tank [Coyote]	1
8	1046109	(000000-002099)	Tube Assy, Hyd, Fltr [Coyote]	1
9	40625	(000000-002099)	Fitting, Hyd, Cap, Jf06	1

Fig. 76 - Hydraulic Cooler and Tubes Group (002100-)

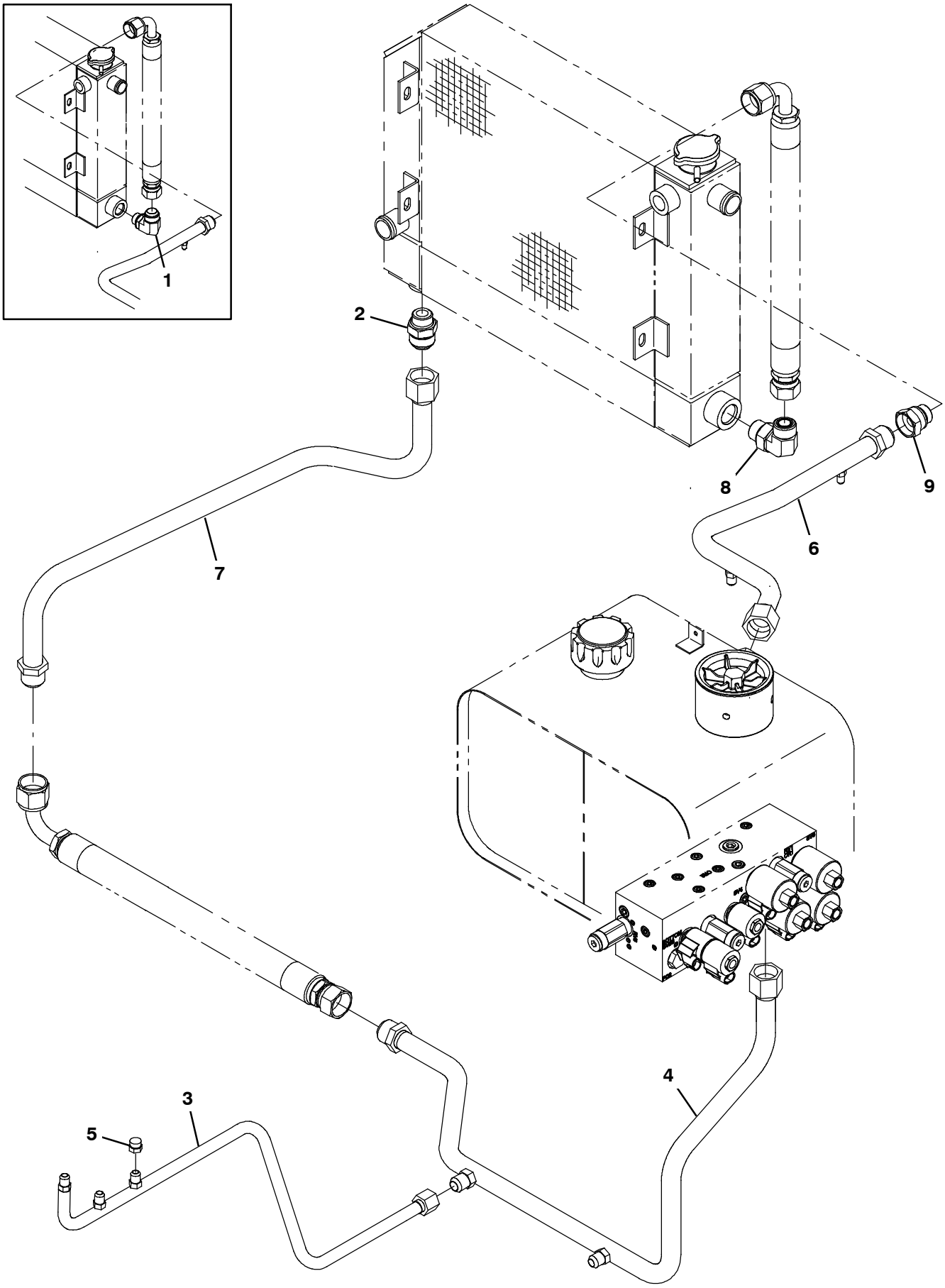

354714

Fig. 76 - Hydraulic Cooler and Tubes Group (002100-)

Ref.	Part No.	Serial Number	Description	Qty.
1	52142	(002100-002999)	Fitting, Hyd, E90, Jm16/Om12	1
1	1067054	(003000-005699)	Fitting, Hyd, E90, Fm16/Om12	1
2	34357	(002100-002999)	Fitting, Hyd, Str, Jm16/Om12	1
2	1068299	(003000-)	Fitting, Hyd, Str, Fm16/Om12	1
3	1033788	(002100-002999)	Tube, Hyd, Steering Drain	1
3	1067177	(003000-)	Tube, Hyd, Steering Drain	1
4	1030498	(002100-002999)	Tube Assy, Hyd, Valve Tank [Coyote]	1
4	1067187	(003000-)	Tube Assy, Hyd, Valve Tank [Coyote]	1
5	40625	(002100-)	Fitting, Hyd, Cap, Jf06	1
6	1054236	(002100-002999)	Tube Assy, Hyd, Fltr	1
6	1067185	(003000-)	Tube Assy, Hyd, Fltr	1
7	1054664	(002100-002999)	Tube Assy, Hyd, Cooler [Coyote]	1
7	1067186	(003000-)	Tube Assy, Hyd, Cooler [Coyote]	1
8	762492	(005700-)	Fitting, Hyd, E90, Fm12/Om12	1
9	1072632	(005700-)	Fitting, Hyd, Str, Ff16/Fm12	1

Fig. 77 - Hydraulic Pumps Group, S30 and XP

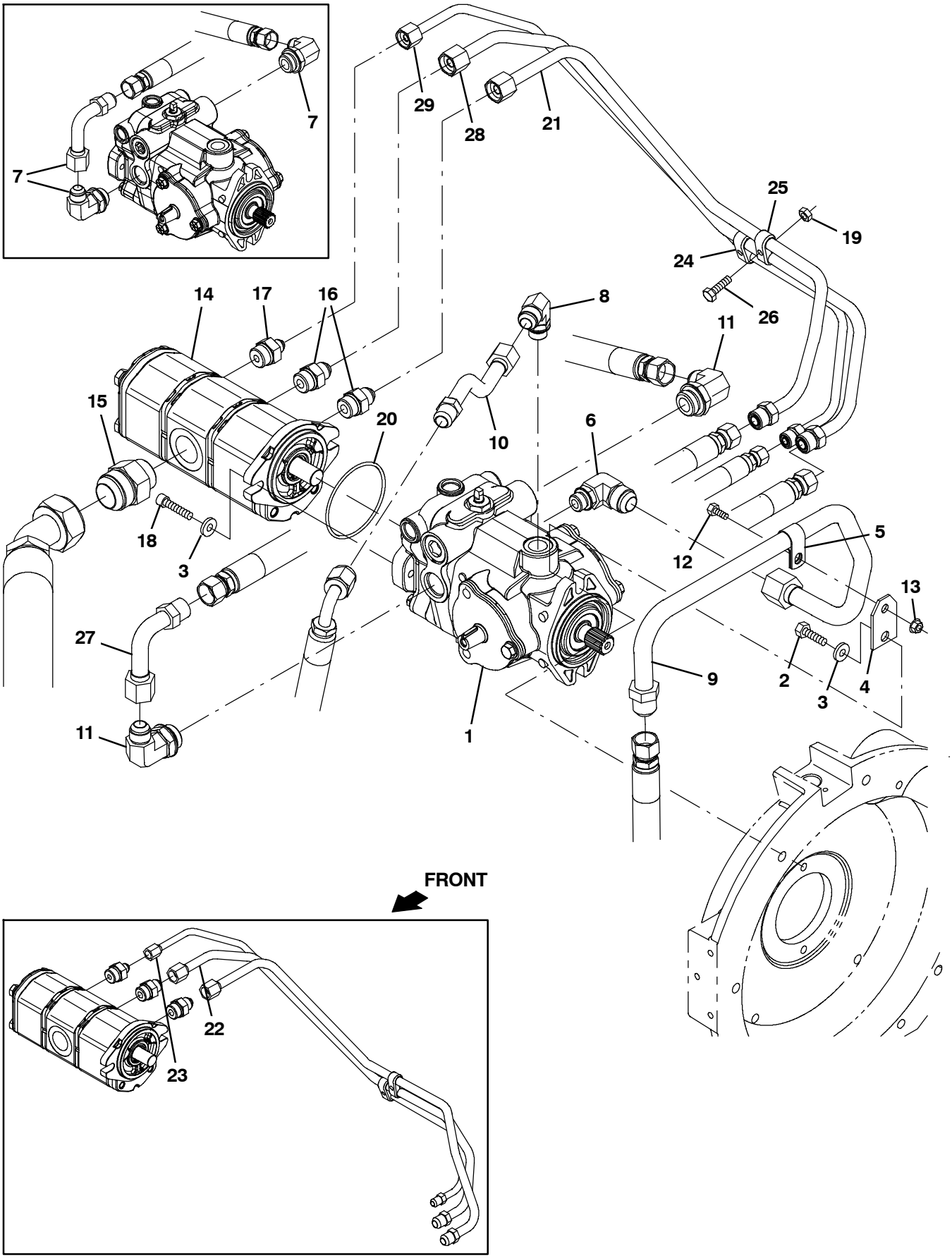

354720

Fig. 77 - Hydraulic Pumps Group, S30 and XP

	Ref.	Part No.	Serial Number	Description	Qty.
	1	1029254	(000000-001802)	Pump, Hyd, Piston, Var, 1.24 4500, Cw (See Breakdowns)	1
	1	1054905	(001803-)	Pump, Hyd, Piston, Var, 1.24 4500, Cw (See Breakdowns)	1
	2	21198	(000000-)	Screw, Hex, .38-16 X 1.25, G5	2
	3	32485	(000000-)	Washer, Flat, 0.38, Sae	4
	4	1039309	(000000-)	Bracket, Sppt, Hyd Tube	1
	5	07471	(000000-)	Clamp, Cable, Stl, 0.75d X 0.75w, 1hole	1
	6	1039483	(000000-002999)	Fitting, Hyd, E90, Jm12/0m08	1
	6	1067053	(003000-)	Fitting, Hyd, E90, Fm12/0m08	1
	7	9008697	(000000-002687)	Hose Kit, Rear Drive, Replmt	1
	8	56827	(000000-002999)	Fitting, Hyd, E90, Jm10/Om08	1
	8	762466	(003000-)	Fitting, Hyd, E90, Fm10/Om08	1
	9	1039210	(000000-002999)	Tube, Hyd [Pump Charge]	1
	9	1067181	(003000-)	Tube, Hyd [Pump Charge]	1
	10	1039340	(000000-002999)	Tube, Hyd, Pump, Drain	1
	10	1067182	(003000-)	Tube, Hyd, Pump, Drain	1
	11	762469	(002688-)	Fitting, Hyd, E90, Fm10/Om12	2
	12	16735	(000000-)	Screw, Hex, M8 X 1.25 X 16, 8.8	1
	13	07791	(000000-)	Nut, Hex, Flng, M8 X 1.25	1
▽	14	1030374	(000000-)	Pump, Hyd, Gear, Ext, 3, 00.70 2500, Cw	1
▲		373708	(000000-)	Pump, Info, Repair	1
▲		373707	(000000-)	Seal Kit	1
	15	67811	(000000-002999)	Fitting, Hyd, Str, Jm20/Om16	1
	15	1007953	(003000-)	Fitting, Hyd, Str, Fm20/Om16	1
	16	56692	(000000-002999)	Fitting, Hyd, Str, Jm08/Om10	2
	16	762456	(003000-)	Fitting, Hyd, Str, Fm08/Om10	2
	17	47508	(000000-002999)	Fitting, Hyd, Str, Jm06/Om10	1
	17	762439	(003000-)	Fitting, Hyd, Str, Fm06/Om10	1
	18	10832	(000000-)	Screw, Soc, .38-16 X 1.50, Al	2
	19	08708	(000000-)	Nut, Hex, Lock, M6 X 1.00, Nl	2
	20	65145-1	(000000-)	Seal, Org, .069 X 03.06id	1
	21	1033916	(000000-002999)	Tube, Hyd, Gear Pump Rear [Coyote]	1
	21	1067180	(003000-)	Tube, Hyd, Gear Pump Rear [Coyote]	1
	22	1033915	(000000-002999)	Tube, Hyd, Gear Pump Middle [Coyote]	1
	22	1067179	(003000-005699)	Tube, Hyd, Gear Pump Middle [Coyote]	1
	23	1033914	(000000-002999)	Tube, Hyd, Gear Pump Front [Coyote]	1
	23	1067178	(003000-005699)	Tube, Hyd, Gear Pump Front [Coyote]	1
	24	1043755	(000000-)	Clamp, Tube, 0.37d 0.50d, 2 Hole	1
	25	1043754	(000000-)	Clamp, Tube, 0.50d 0.50d, 2 Hole	1
	26	06944	(000000-)	Screw, Hex, M6 X 1.00 X 25, 8.8	2
	27	1065781	(002688-)	Tube, Hyd, Pump, Rear Drive, Ff10/Fm10	1
	28	1071716	(005700-)	Tube, Hyd, Gear Pump Middle[S30 Mit2013]	1
	29	1071717	(005700-)	Tube, Hyd, Gear Pump Front[S30 Mit2013]	1

Fig. 78 - Hydraulic Valve Group, S30

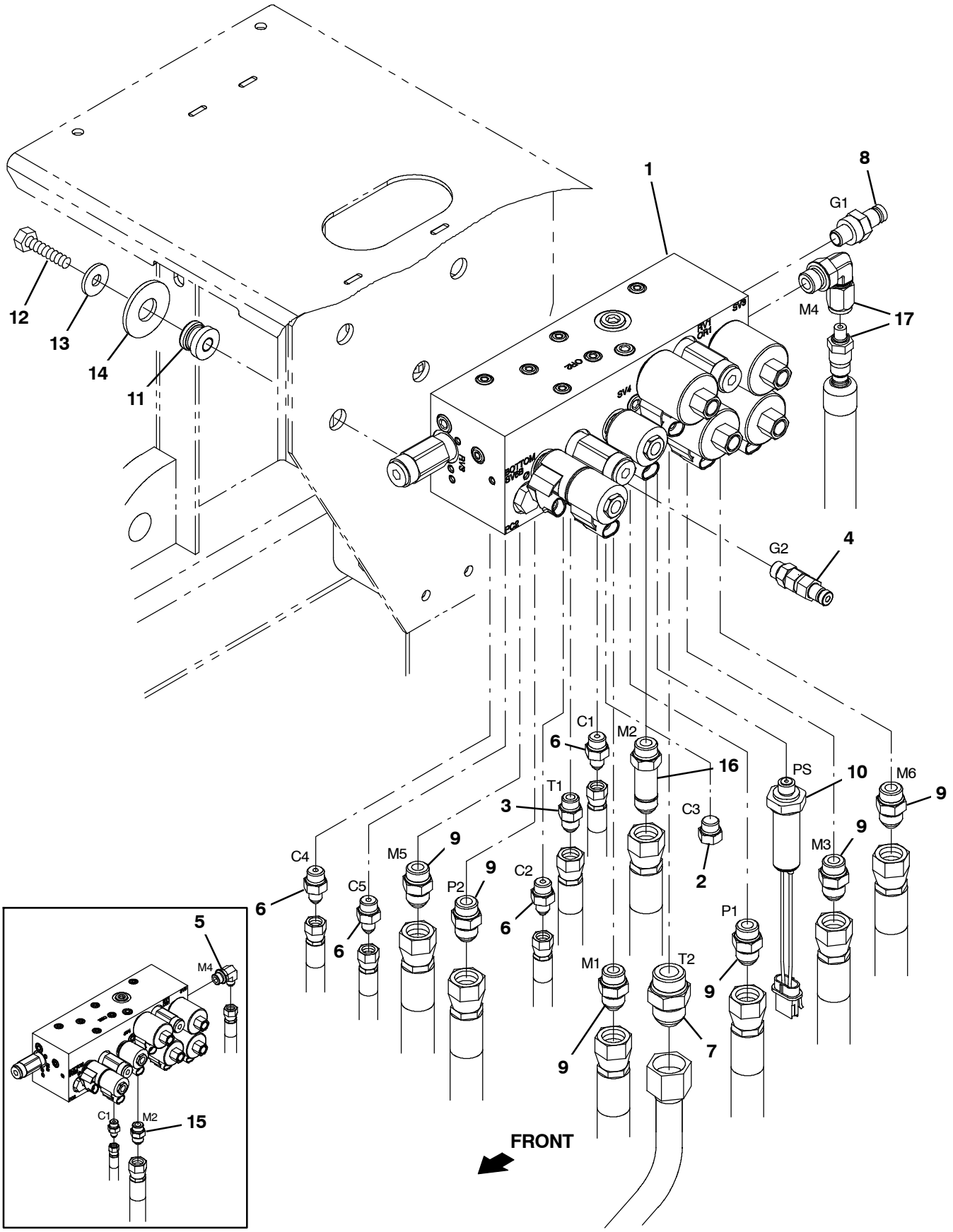

354715

Fig. 78 - Hydraulic Valve Group, S30

Ref.	Part No.	Serial Number	Description	Qty.
1	1040091	(000000-)	Valve, Hyd, Solenoid, 12vdc [06s] (See Breakdowns)	1
2	46482	(000000-)	Fitting, Hyd, Plug, Om06	1
3	56690	(000000-002999)	Fitting, Hyd, Str, Jm06/Om06	1
3	762433	(003000-)	Fitting, Hyd, Str, Fm06/Om06	1
4	1043652	(000000-)	Fitting, Hyd, Str, Om06/Qm04	1
5	47512	(000000-002999)	Fitting, Hyd, E90, Jm06/Om08	1
5	762437	(003000-005699)	Fitting, Hyd, E90, Fm06/Om08	1
6	55685	(000000-002999)	Fitting, Hyd, Str, Jm04/Om06	4
6	762426	(003000-)	Fitting, Hyd, Str, Fm04/Om06	4
7	34357	(000000-002999)	Fitting, Hyd, Str, Jm16/Om12	1
7	767410	(003000-)	Fitting, Hyd, Str, Fm16/Om12	1
8	395973	(000000-)	Fitting, Hyd, Str, Om04/Qm04	1
9	44869	(000000-002999)	Fitting, Hyd, Str, Jm08/Om08	6
9	762445	(003000-)	Fitting, Hyd, Str, Fm08/Om08	6
10	769077	(000000-)	Switch Assy, Press, No 02400psi	1
11	54274	(000000-)	Isolator, Vib, Bshg, 1.1d 0.6l .4b 0.78h	4
12	39285	(000000-)	Screw, Hex, M10 X 1.50 X 40, 8.8	4
13	39350	(000000-)	Washer, Flat, 0.75, Sae	4
14	13248	(000000-)	Washer, Flat, 0.40b 1.12d .12, Stl, Pl	4
15	44869	(000000-002999)	Fitting, Hyd, Str, Jm08/Om08	1
16	767430	(003000-)	Fitting, Hyd, Str, Fm08/Om08, Long	1
17	9011154	(005700-)	Hose Kit, Hyd, Replmt [S30]	1

Fig. 79 - Hydraulic Valve Group, S30 XP

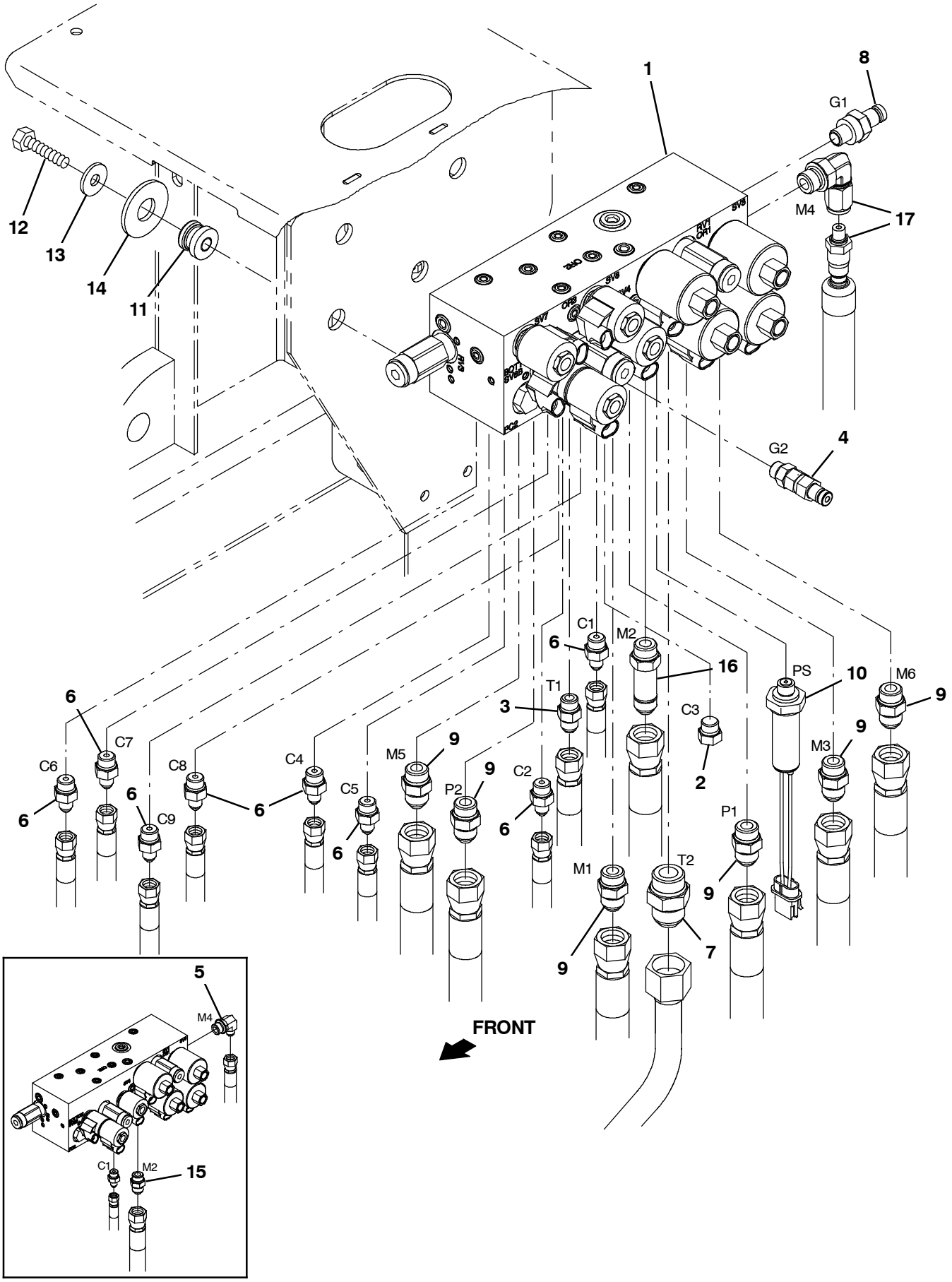

354719

Fig. 79 - Hydraulic Valve Group, S30 XP

Ref.	Part No.	Serial Number	Description	Qty.
1	1034671	(000000-)	Valve, Hyd, Solenoid, 12vdc [08s] (See Breakdowns)	1
2	46482	(000000-)	Fitting, Hyd, Plug, Om06	1
3	56690	(000000-002999)	Fitting, Hyd, Str, Jm06/Om06	1
3	762433	(003000-)	Fitting, Hyd, Str, Fm06/Om06	1
4	1043652	(000000-)	Fitting, Hyd, Str, Om06/Qm04	1
5	47512	(000000-002999)	Fitting, Hyd, E90, Jm06/Om08	1
5	762437	(003000-005699)	Fitting, Hyd, E90, Fm06/Om08	1
6	55685	(000000-002999)	Fitting, Hyd, Str, Jm04/Om06	8
6	762426	(003000-)	Fitting, Hyd, Str, Fm04/Om06	8
7	34357	(000000-002999)	Fitting, Hyd, Str, Jm16/Om12	1
7	767410	(003000-)	Fitting, Hyd, Str, Fm16/Om12	1
8	395973	(000000-)	Fitting, Hyd, Str, Om04/Qm04	1
9	44869	(000000-002999)	Fitting, Hyd, Str, Jm08/Om08	6
9	762445	(003000-)	Fitting, Hyd, Str, Fm08/Om08	6
10	769077	(000000-)	Switch Assy, Press, No 02400psi	1
11	54274	(000000-)	Isolator, Vib, Bshg, 1.1d 0.6l .4b 0.78h	4
12	39285	(000000-)	Screw, Hex, M10 X 1.50 X 40, 8.8	4
13	39350	(000000-)	Washer, Flat, 0.75, Sae	4
14	13248	(000000-)	Washer, Flat, 0.40b 1.12d .12, Stl, Pl	4
15	44869	(000000-002999)	Fitting, Hyd, Str, Jm08/Om08	1
16	767430	(003000-)	Fitting, Hyd, Str, Fm08/Om08, Long	1
17	9011154	(005700-)	Hose Kit, Hyd, Replmt [S30]	1

Fig. 80 - Electrical Schematic, GM, S30 (000000-005699) (1 of 4)

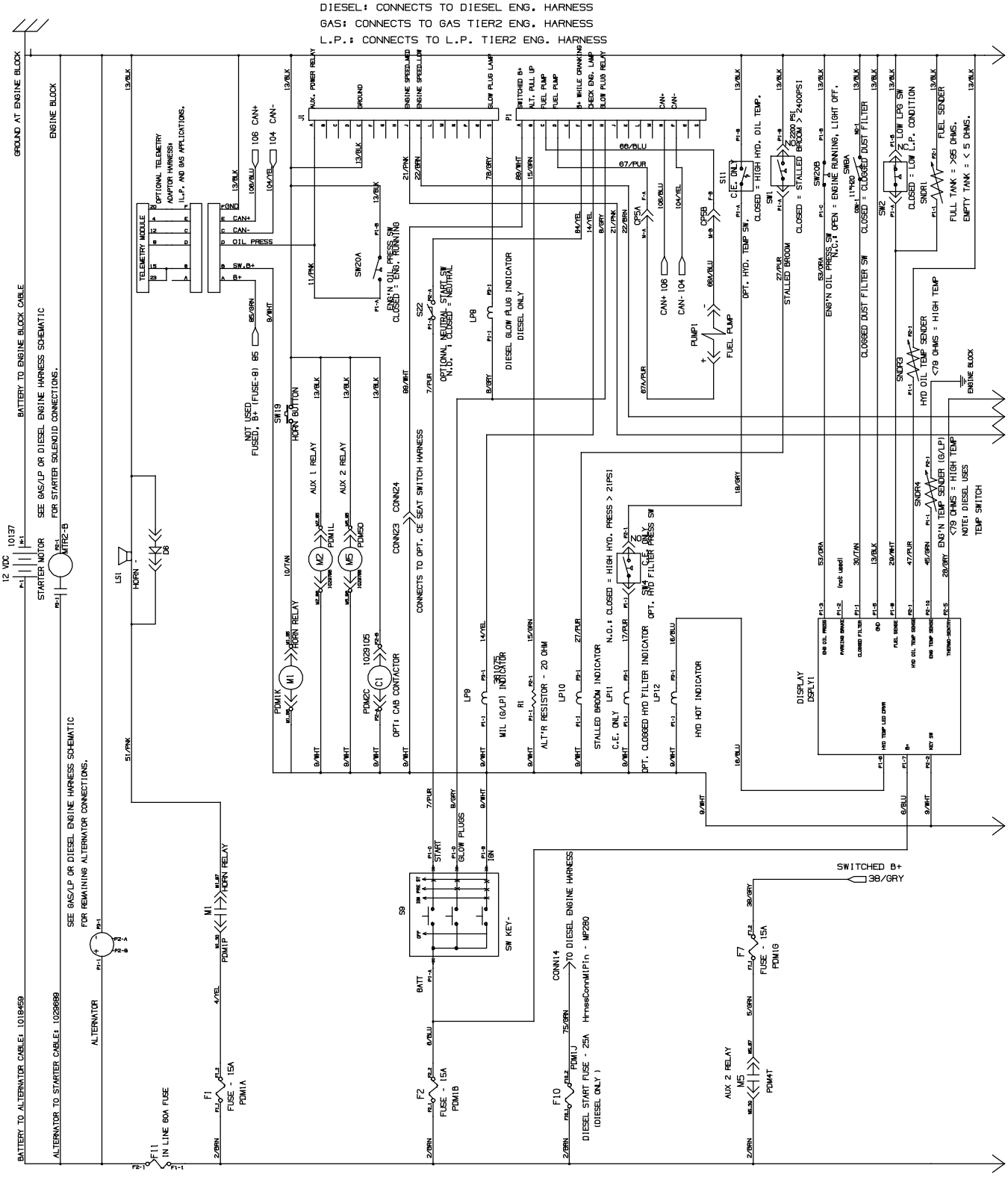

1029278- 354728

Fig. 80 - Electrical Schematic, GM, S30 (000000-005699) (2 of 4)

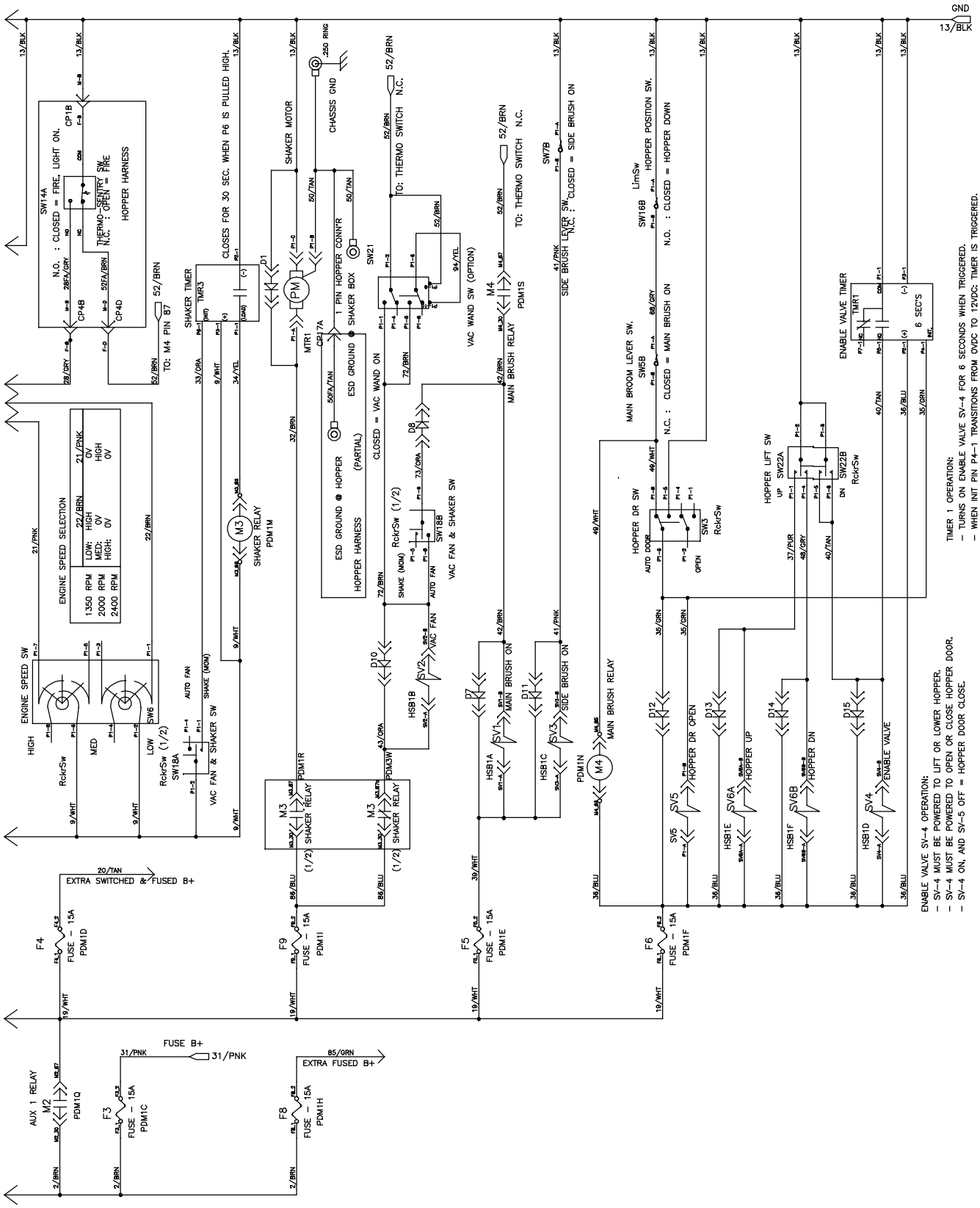

1029278- 354728

Fig. 80 - Electrical Schematic, GM, S30 (000000-005699) (3 of 4)

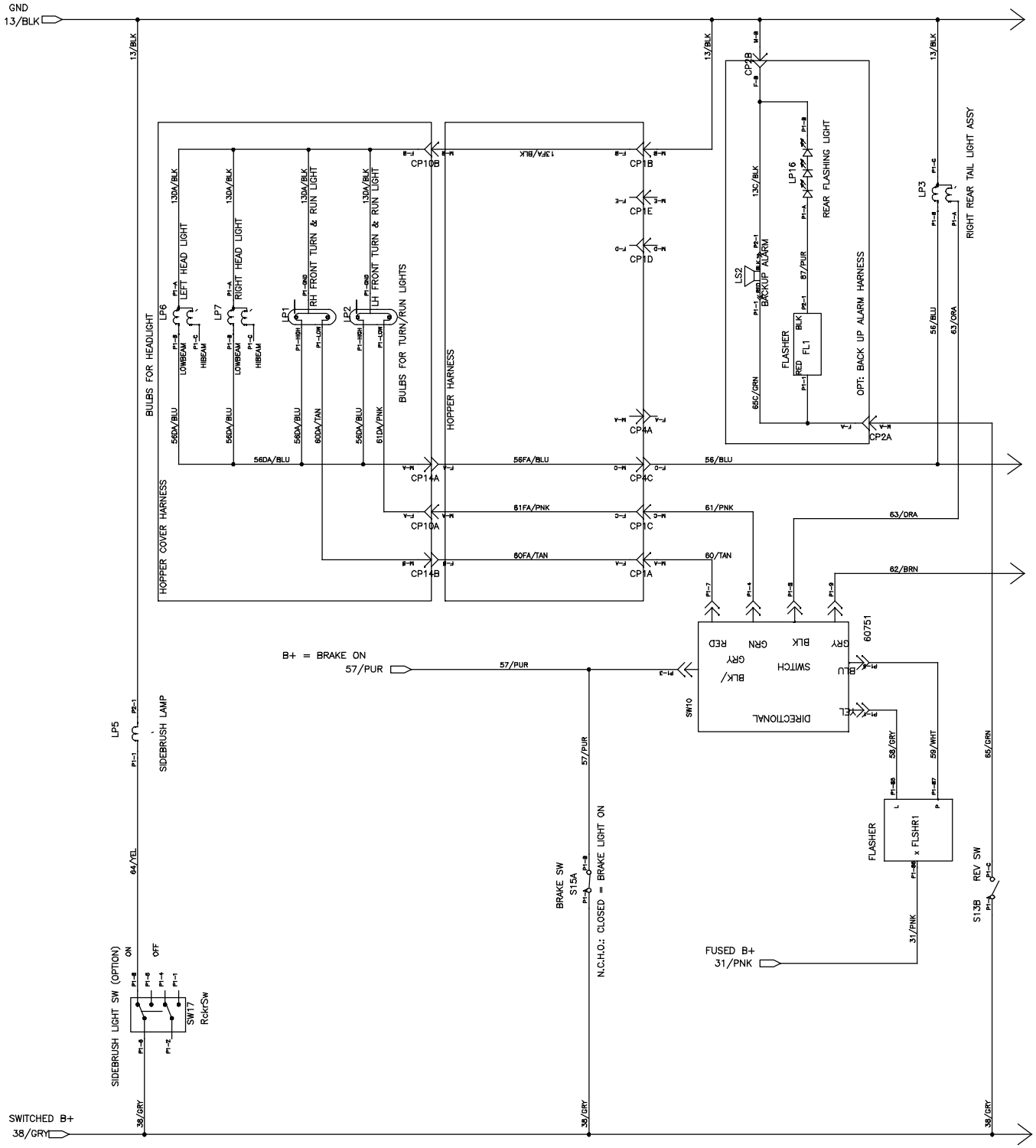

Fig. 80 - Electrical Schematic, GM, S30 (000000-005699) (4 of 4)

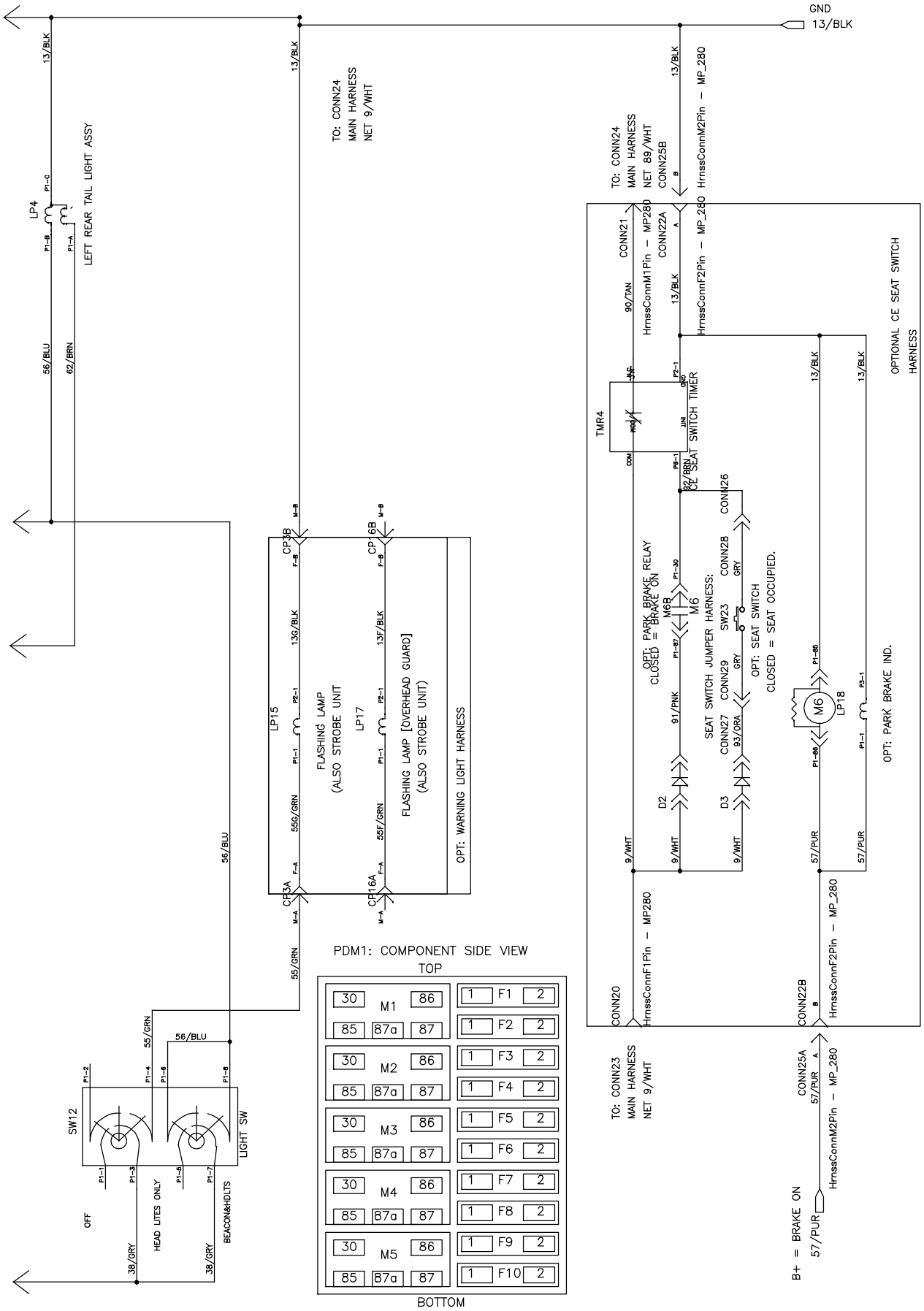

Fig. 81 - Electrical Schematic, Mitsubishi, S30 (005700-) (1 of 4)

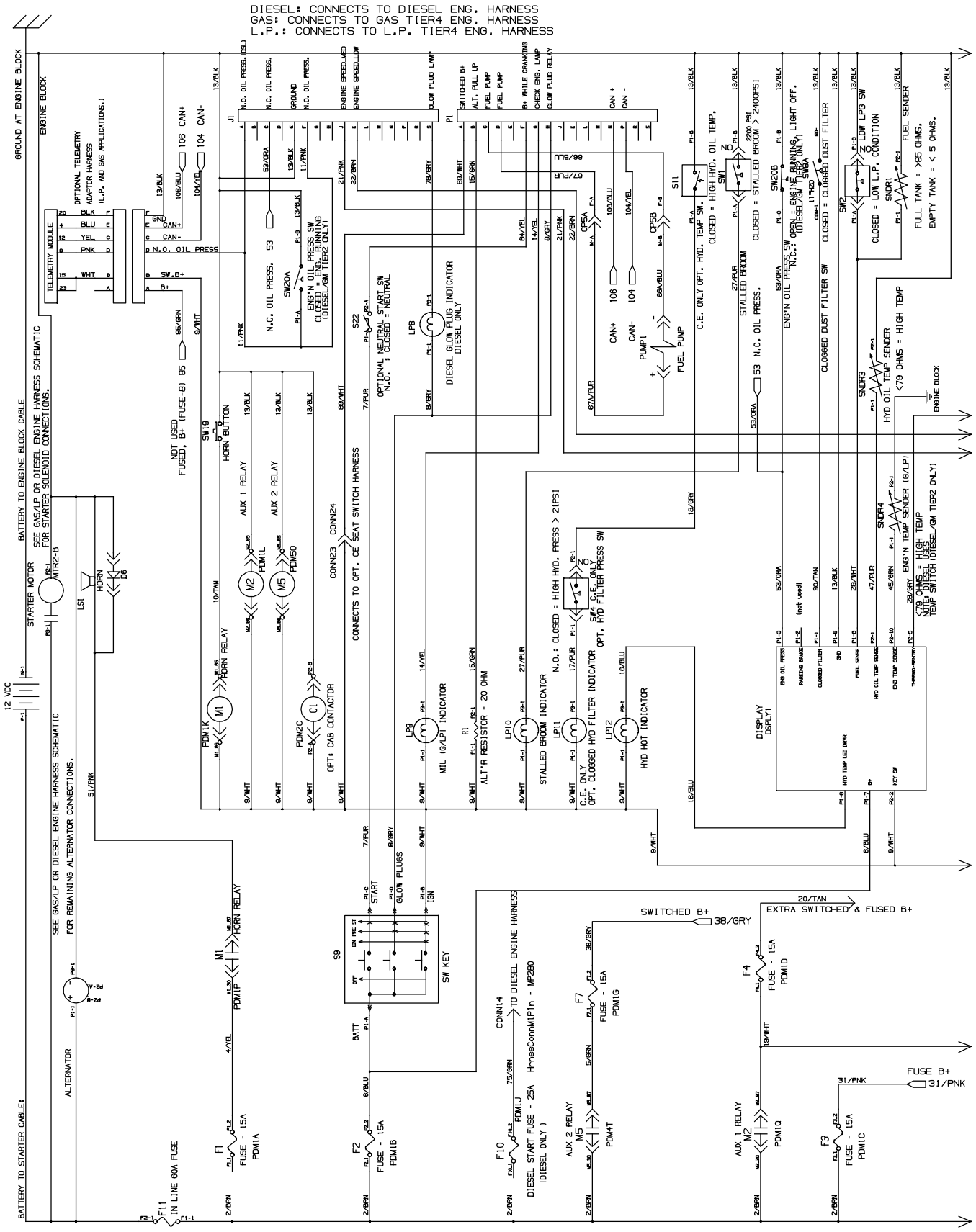

Fig. 81 - Electrical Schematic, Mitsubishi, S30 (005700-) (2 of 4)

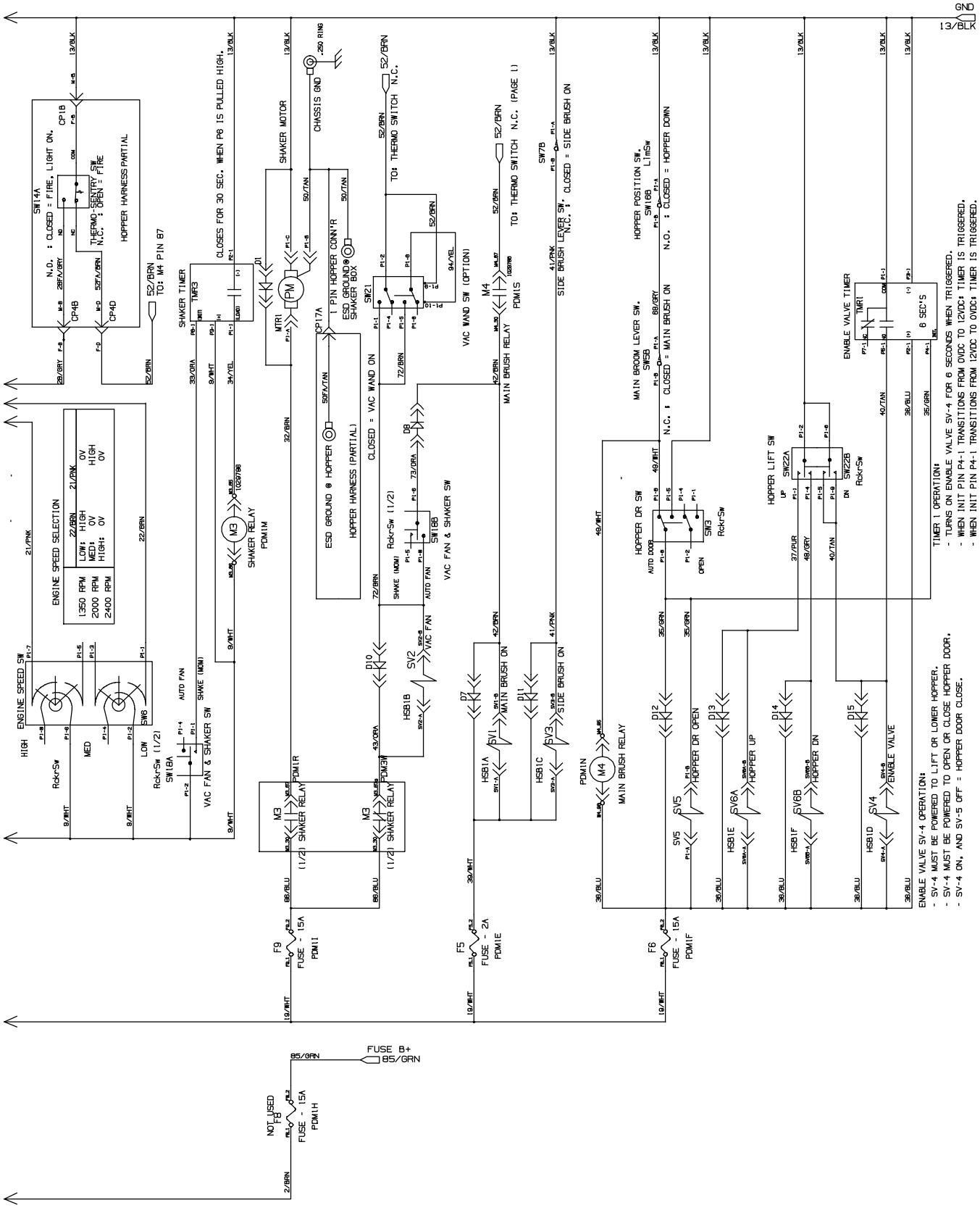

1029278- 356378

Fig. 81 - Electrical Schematic, Mitsubishi, S30 (005700-) (3 of 4)

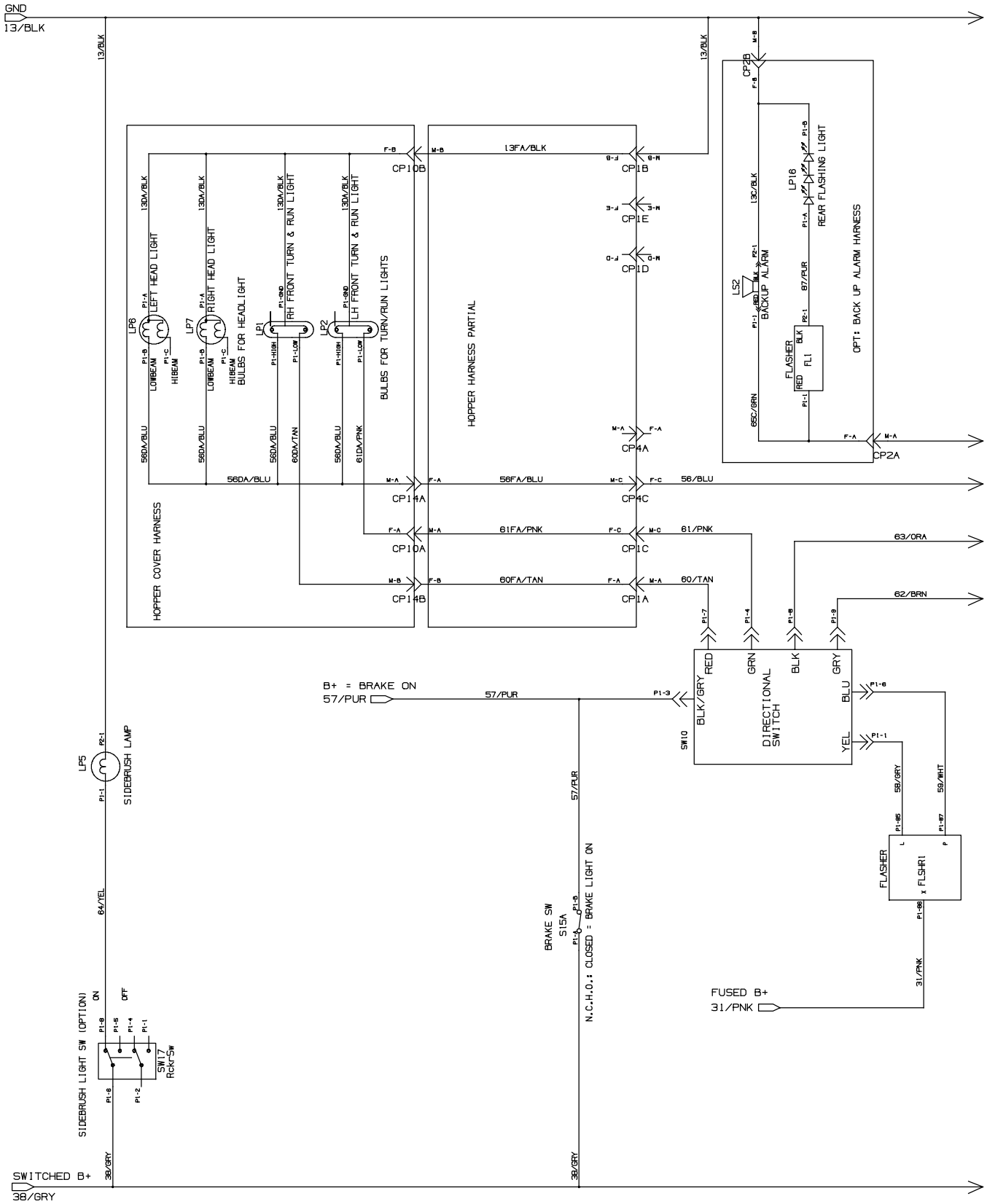

Fig. 81 - Electrical Schematic, Mitsubishi, S30 (005700-) (4 of 4)

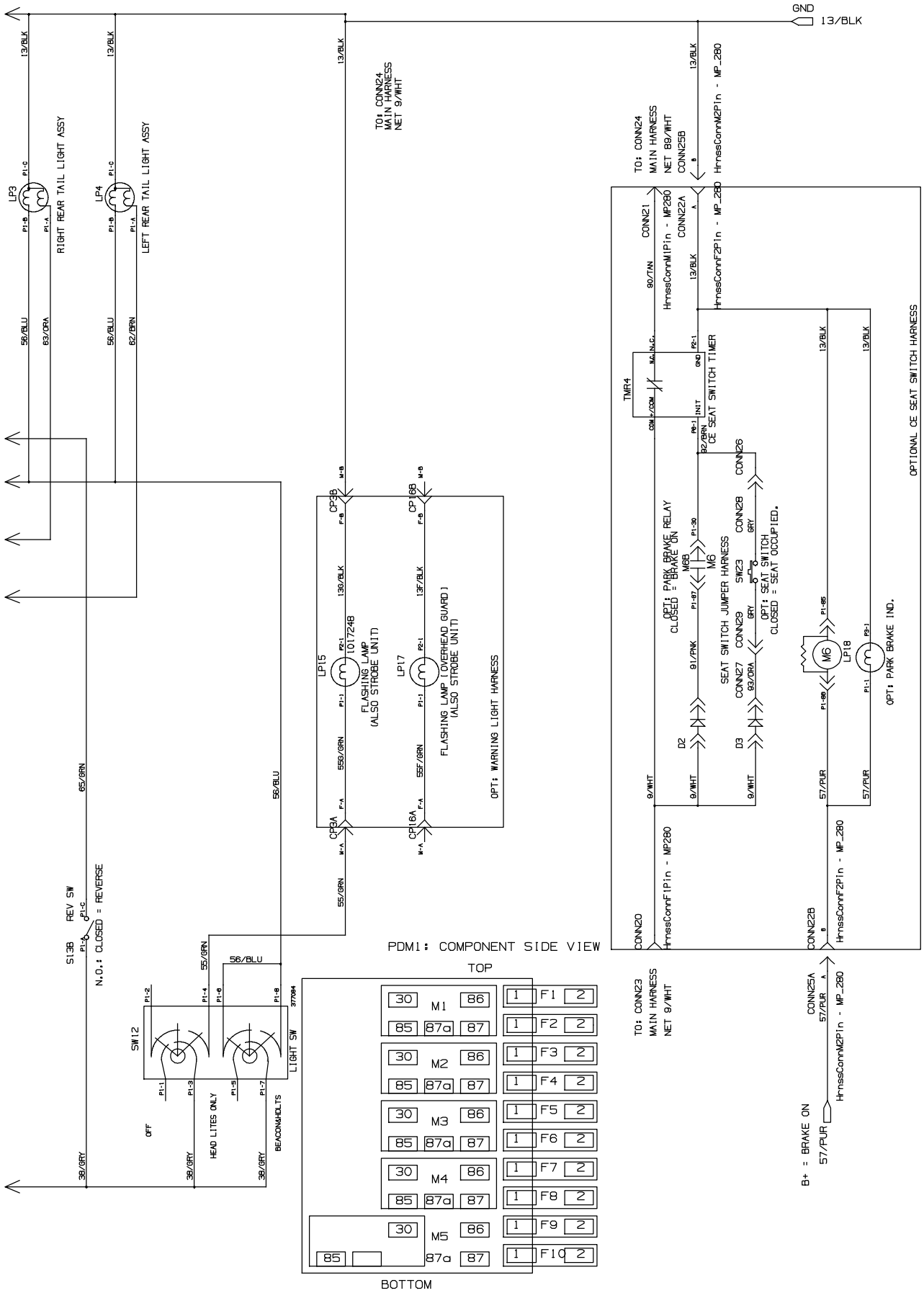

Fig. 82 - Electrical Schematic, GM, S30 XP (000000-005699) (1 of 4)

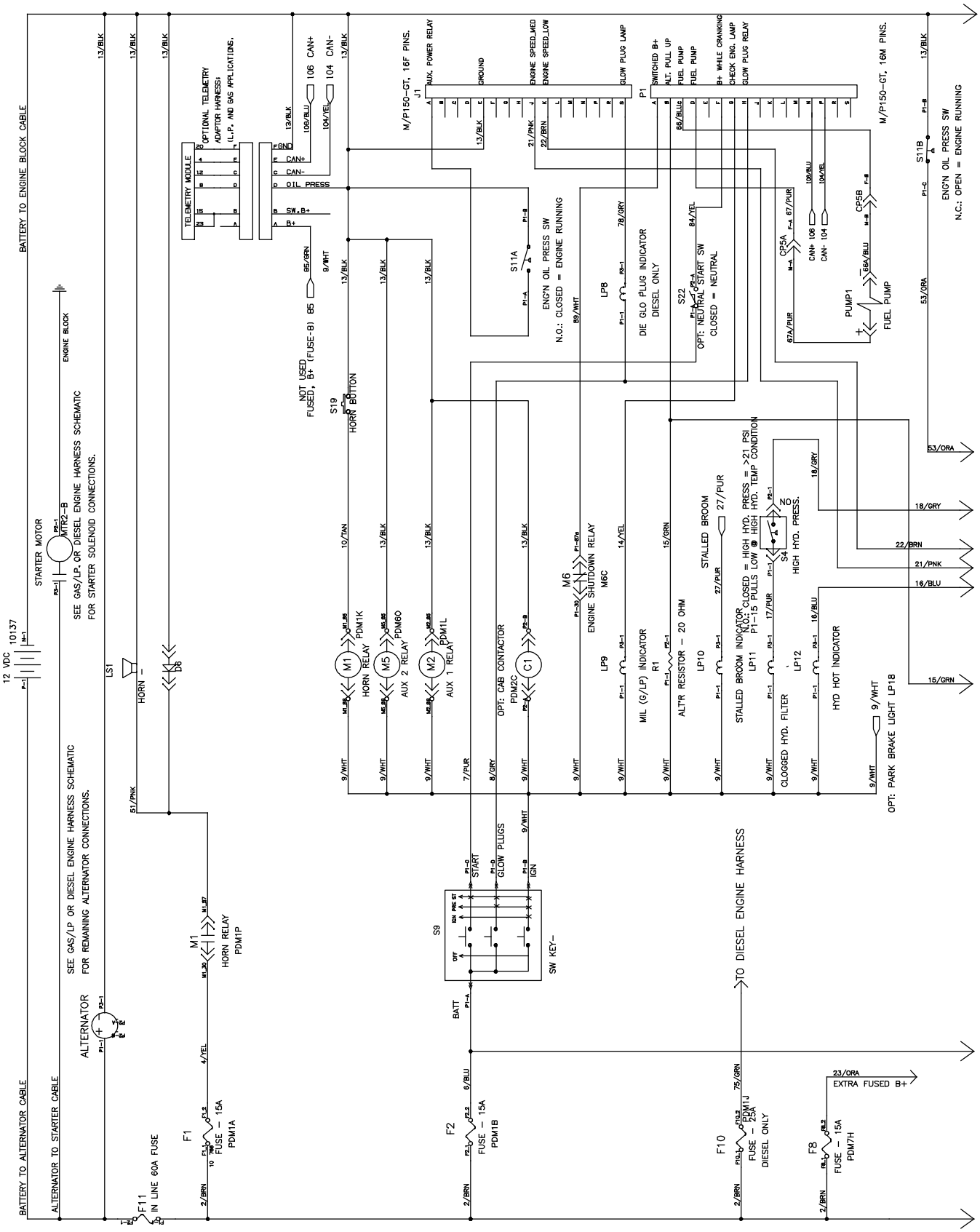

1029805 - 354729

Fig. 82 - Electrical Schematic, GM, S30 XP (000000-005699) (2 of 4)

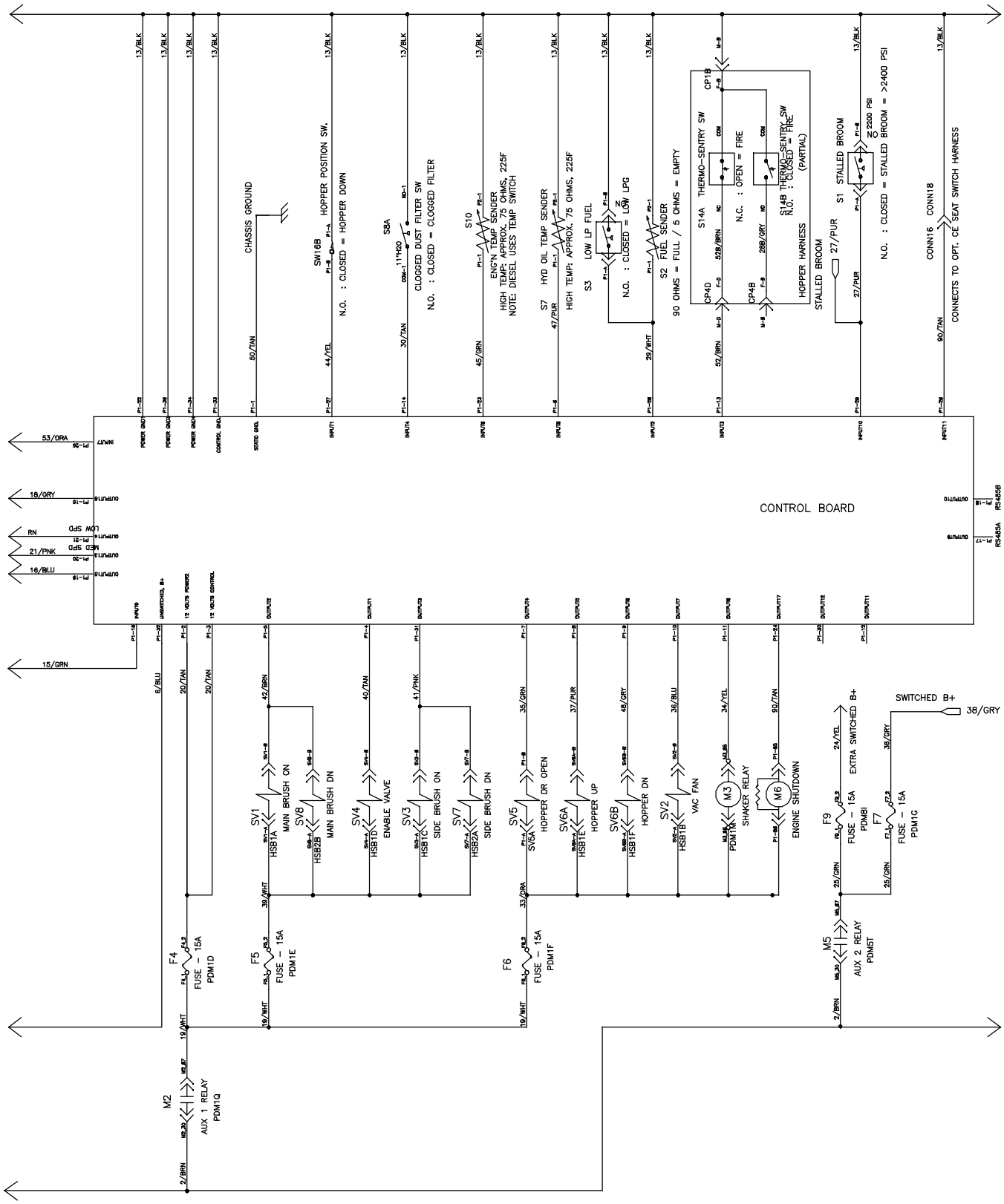

Fig. 82 - Electrical Schematic, S30 XP GM, (000000-005699) (3 of 4)

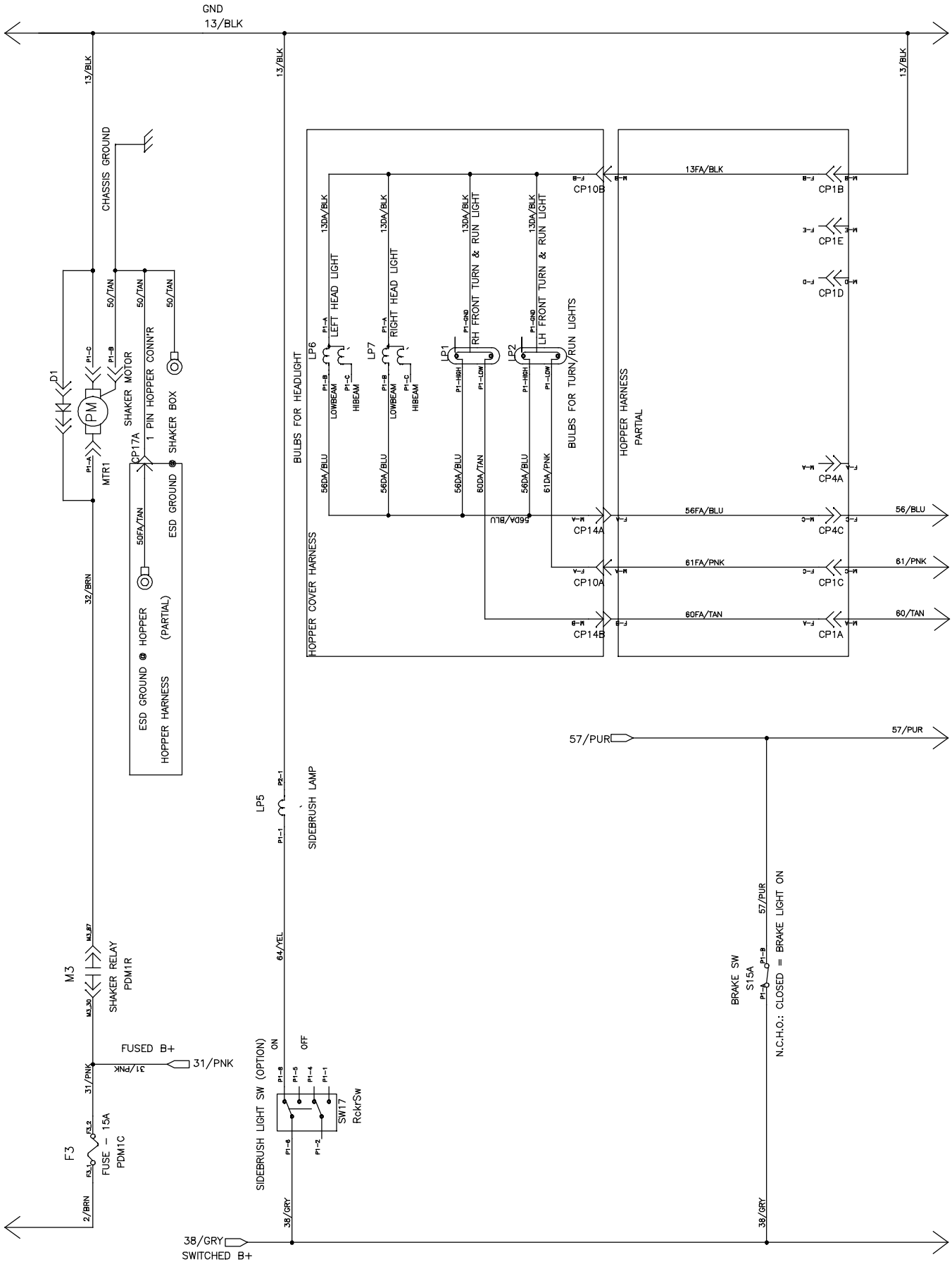

Fig. 82 - Electrical Schematic, GM, S30 XP (000000-005699) (4 of 4)

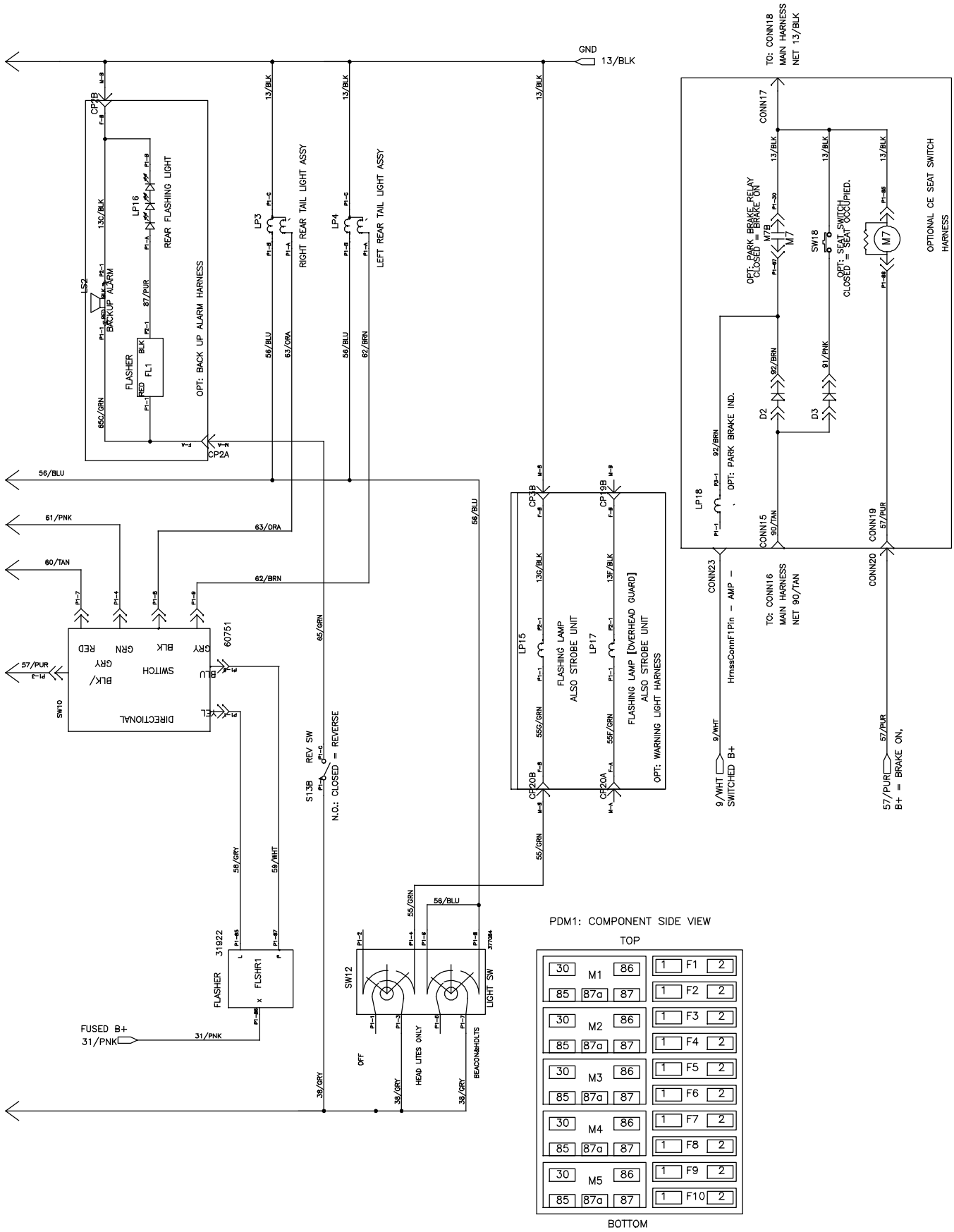

Fig. 83 - Electrical Schematic, Mitsubishi, S30 XP (005700-) (1 of 4)

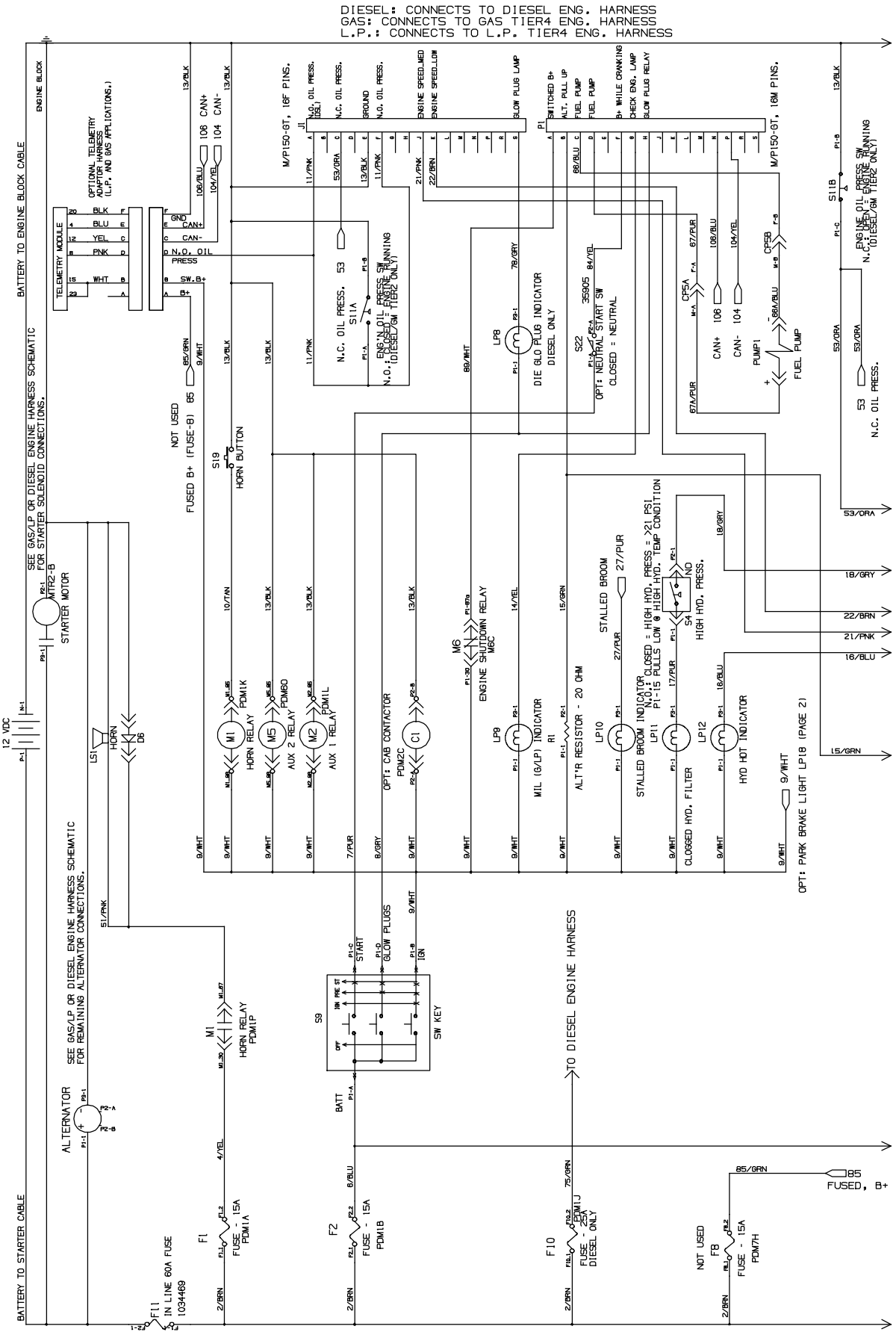

Fig. 83 - Electrical Schematic, Mitsubishi, S30 XP (005700-) (2 of 4)

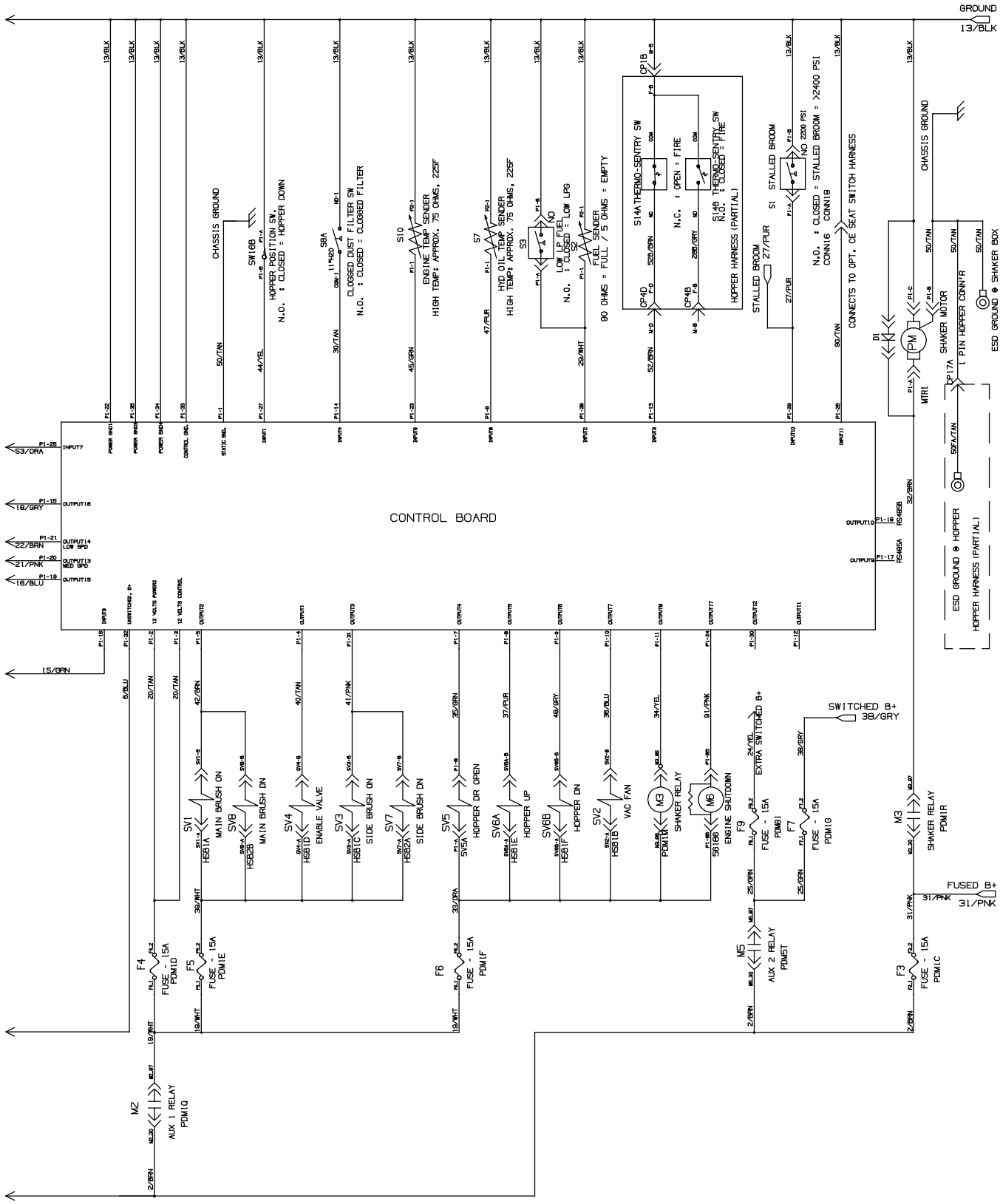

Fig. 83 - Electrical Schematic, Mitsubishi, S30 XP (005700-) (3 of 4)

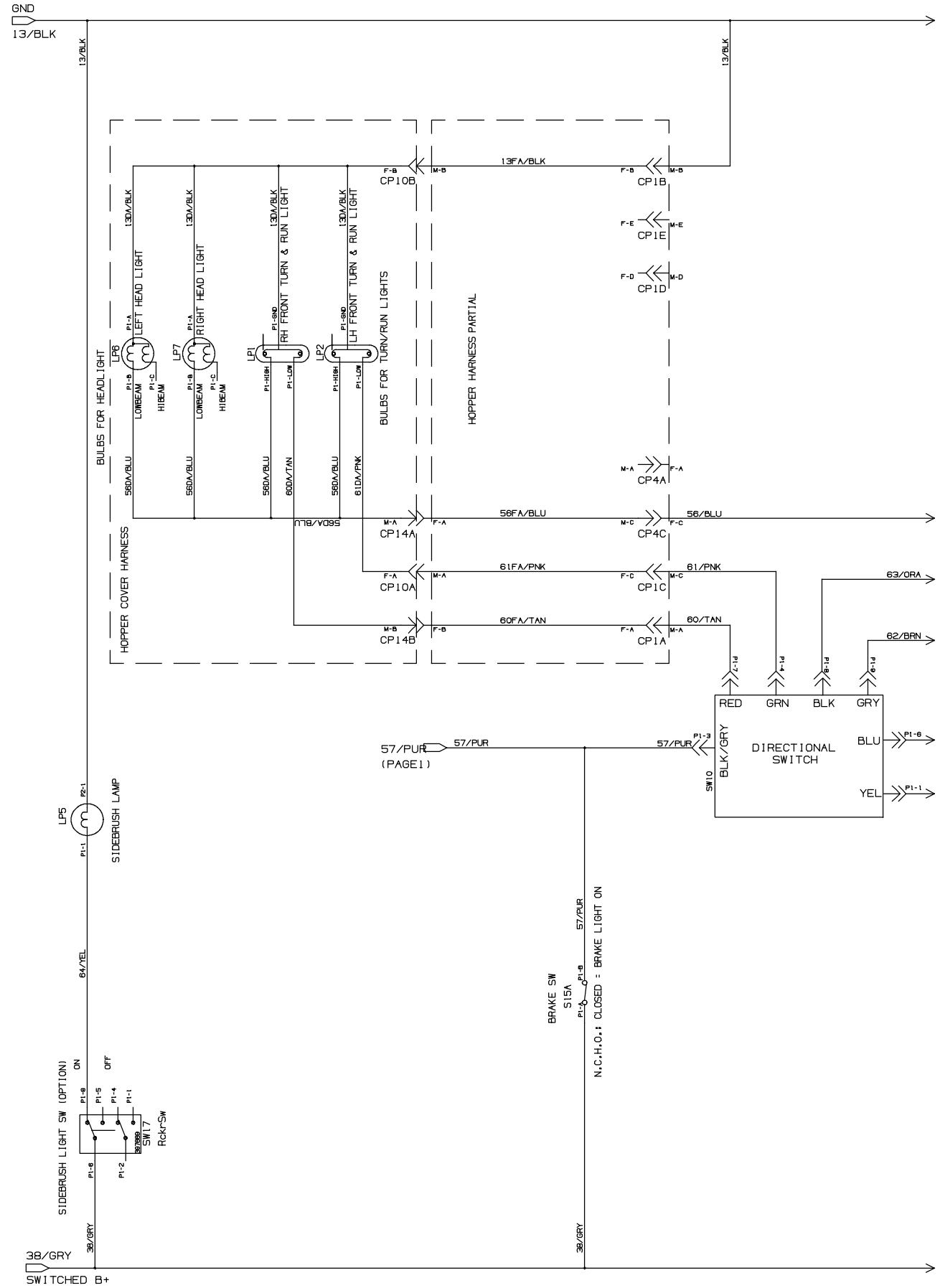

Fig. 83 - Electrical Schematic, Mitsubishi, S30 XP (005700-) (4 of 4)

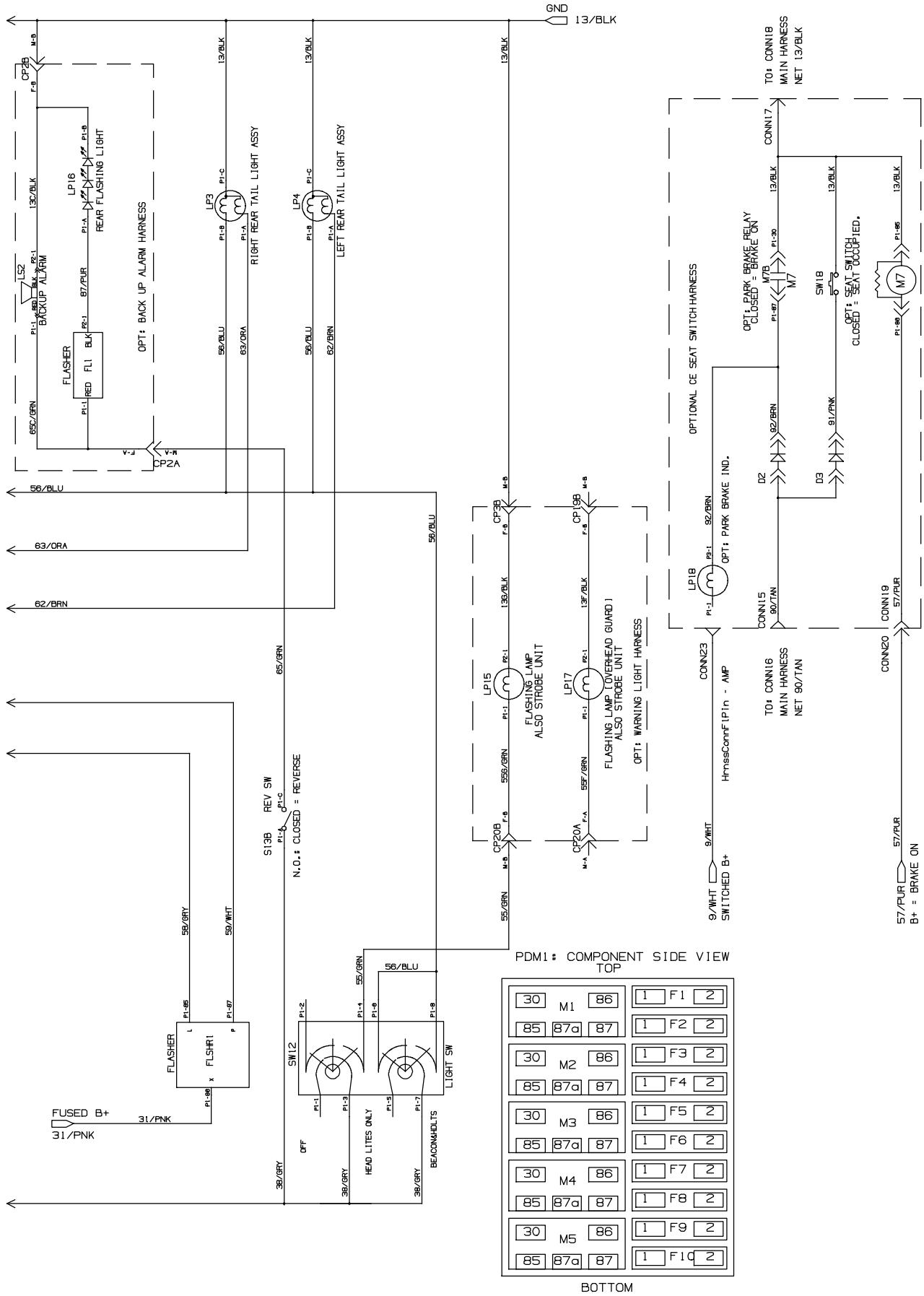

Fig. 84 - Electrical Schematic, Gasoline Engine Harness, GM (000000-005699) (1 of 2)

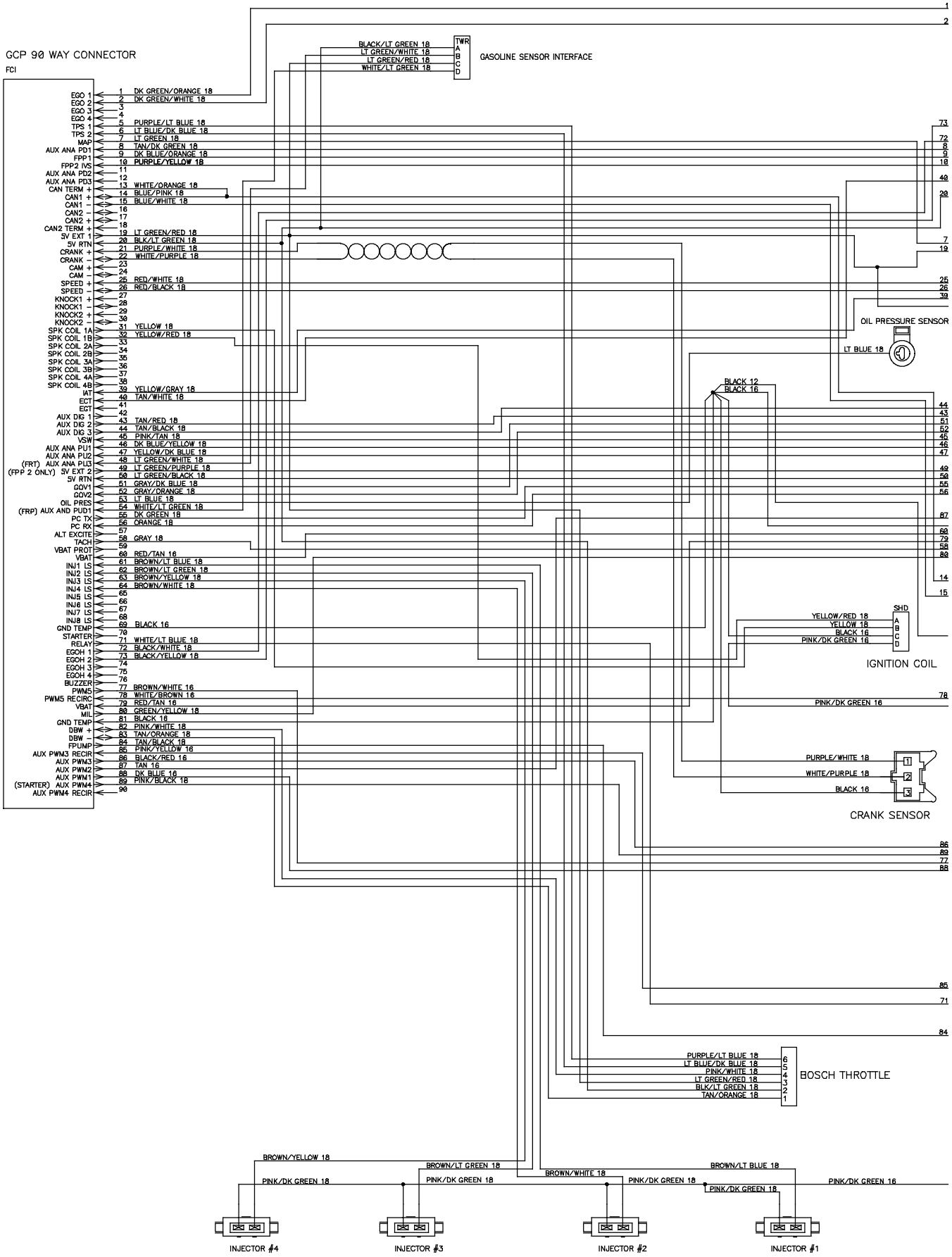

384997 - 354495

Fig. 84 - Electrical Schematic, Gasoline Engine Harness, GM (000000-005699) (2 of 2)

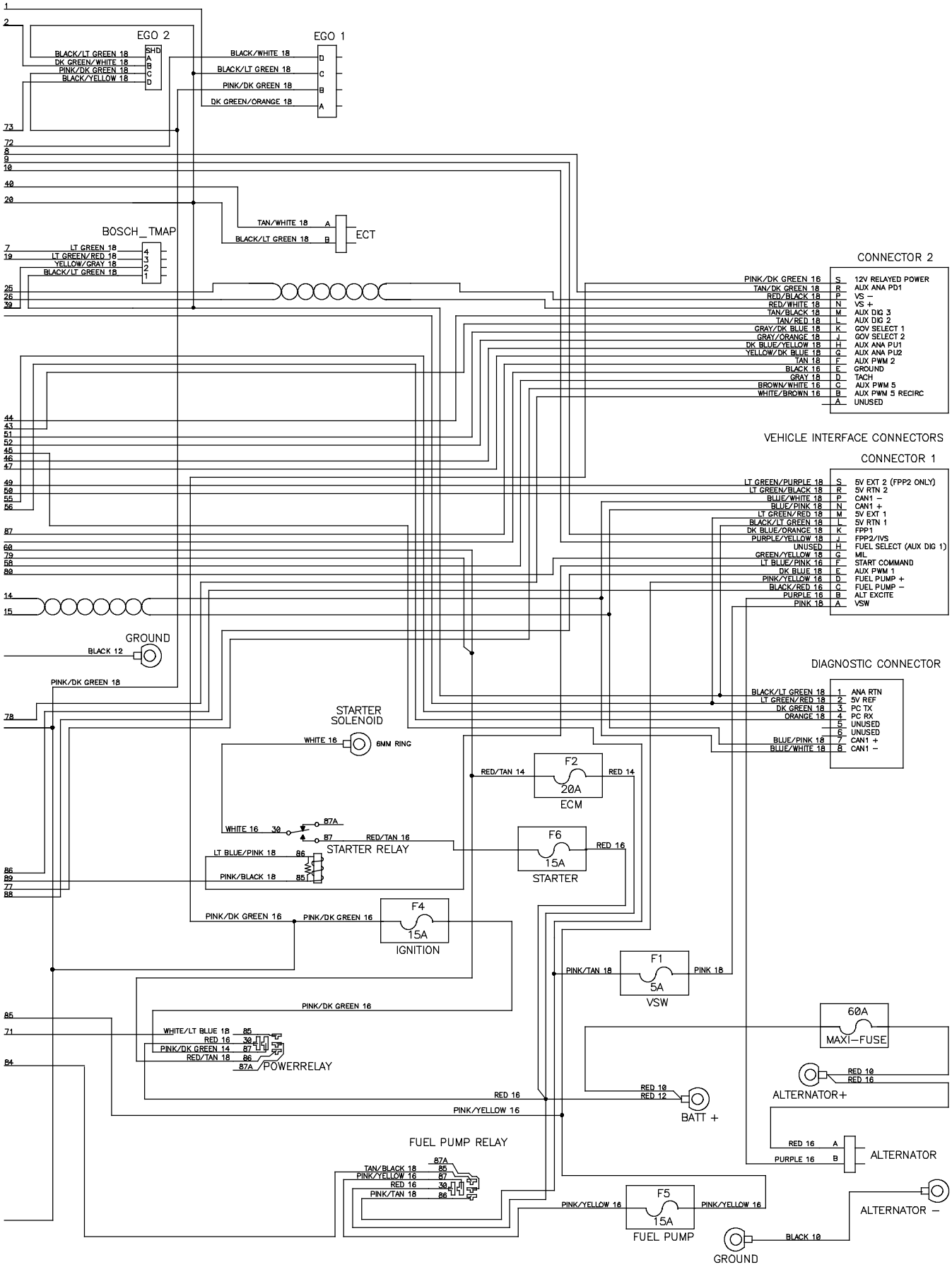

384997 - 354496

Fig. 85 - Electrical Schematic, Gas Engine Harness, Mitsubishi (005700-) (1 of 2)

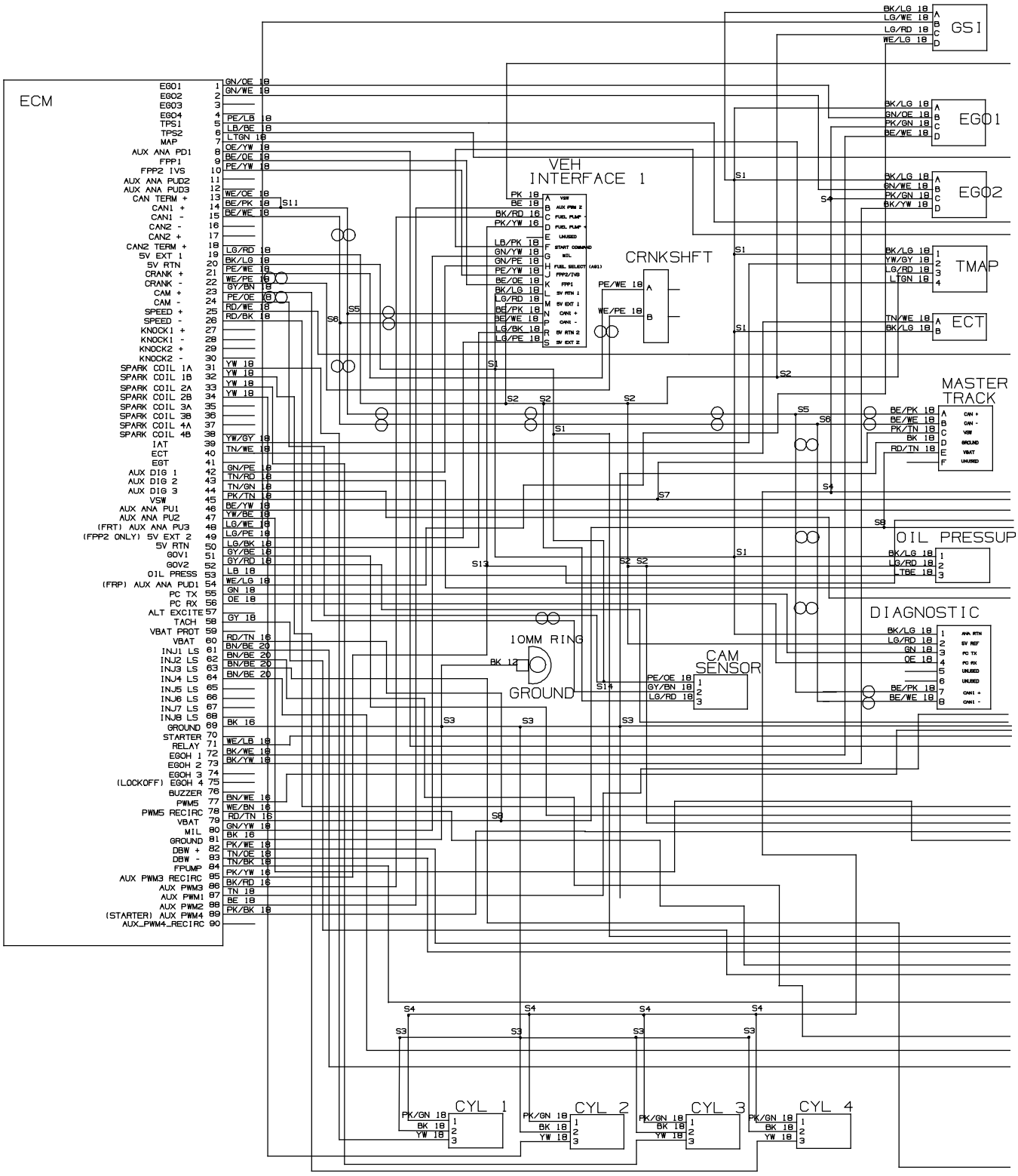

1071653- 356303

Fig. 85 - Electrical Schematic, Gas Engine Harness, Mitsubishi (005700-) (2 of2)

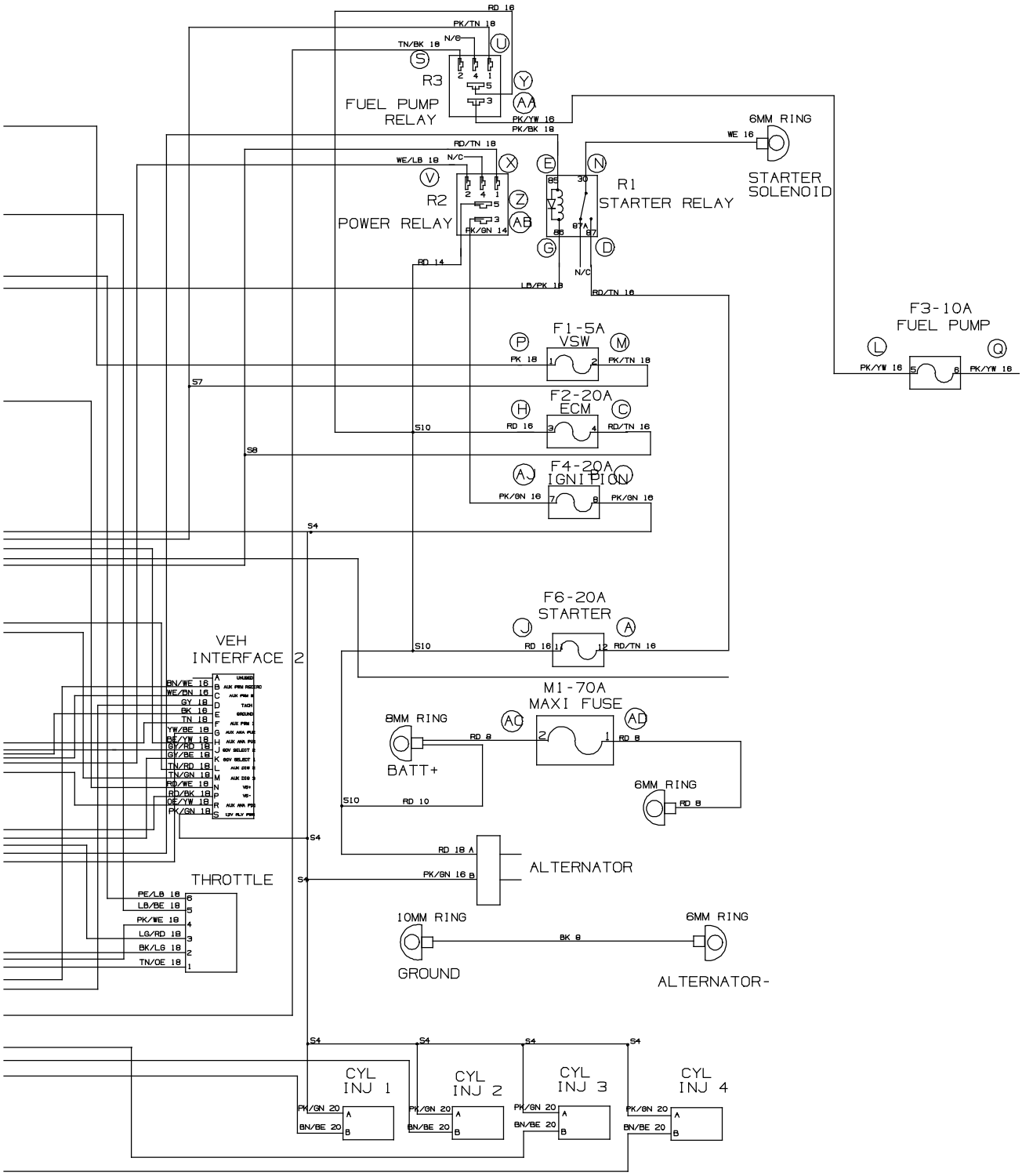

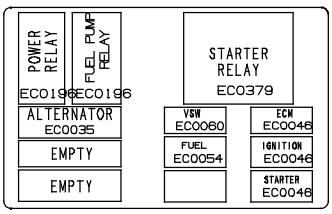

LOADING VIEW

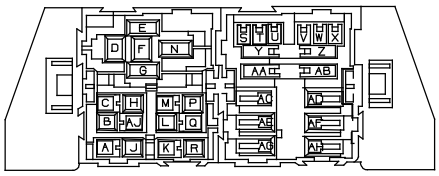

CB0186
WIRE INSERTION VIEW

1071653- 356303

Fig. 86 - Electrical Schematic, LPG Engine Harness GM (000000-005699) (1 of 2)

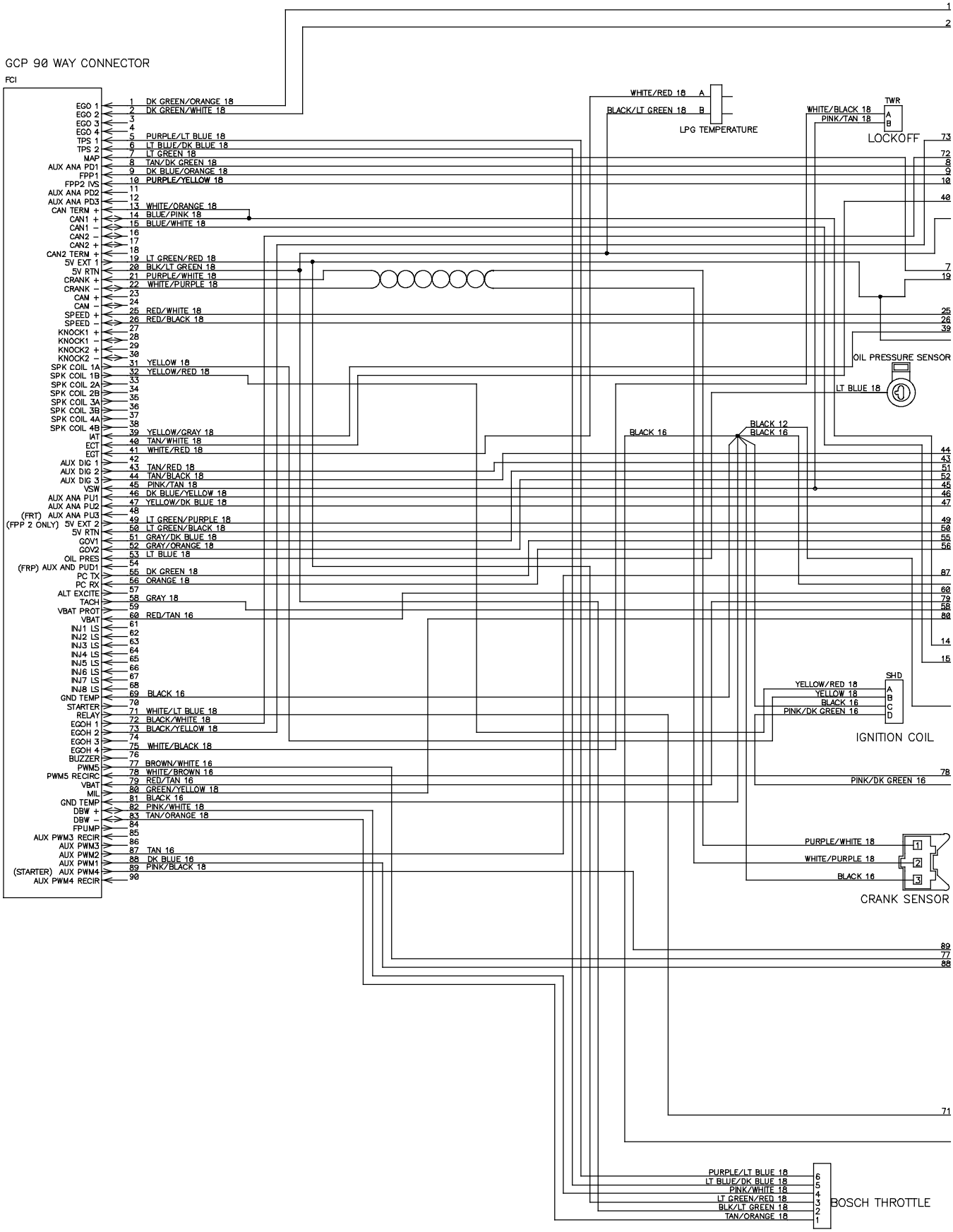

384990 - 354497

Fig. 86 - Electrical Schematic, LPG Engine Harness, GM (000000-005699) (2 of 2)

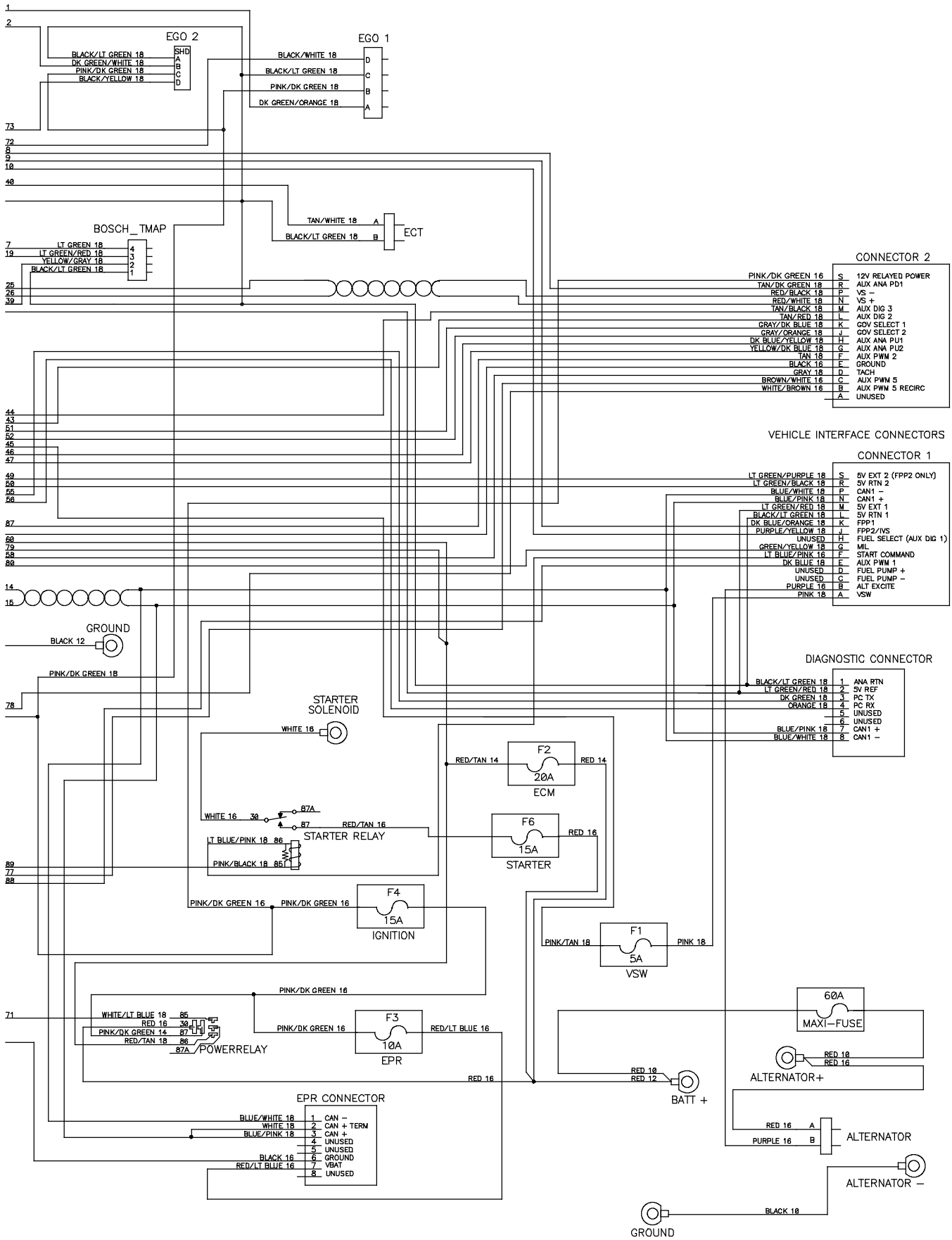

Fig. 87 - Electrical Schematic, LPG Engine Harness, Mitsubishi (005700-) (1 of 2)

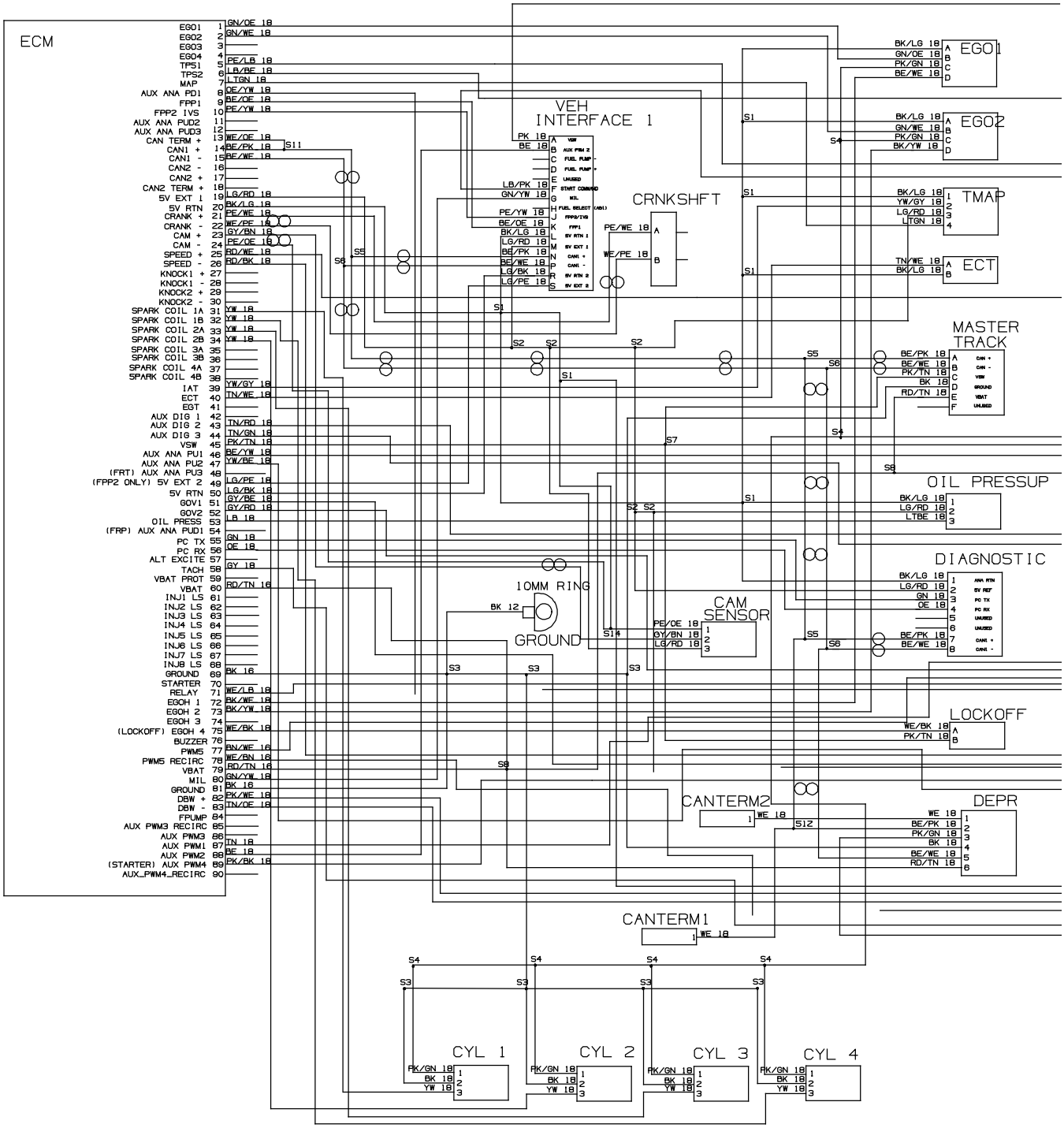

1071654- 356304

Fig. 87 - Electrical Schematic, LPG Engine Harness, Mitsubishi (005700-) (2 of 2)

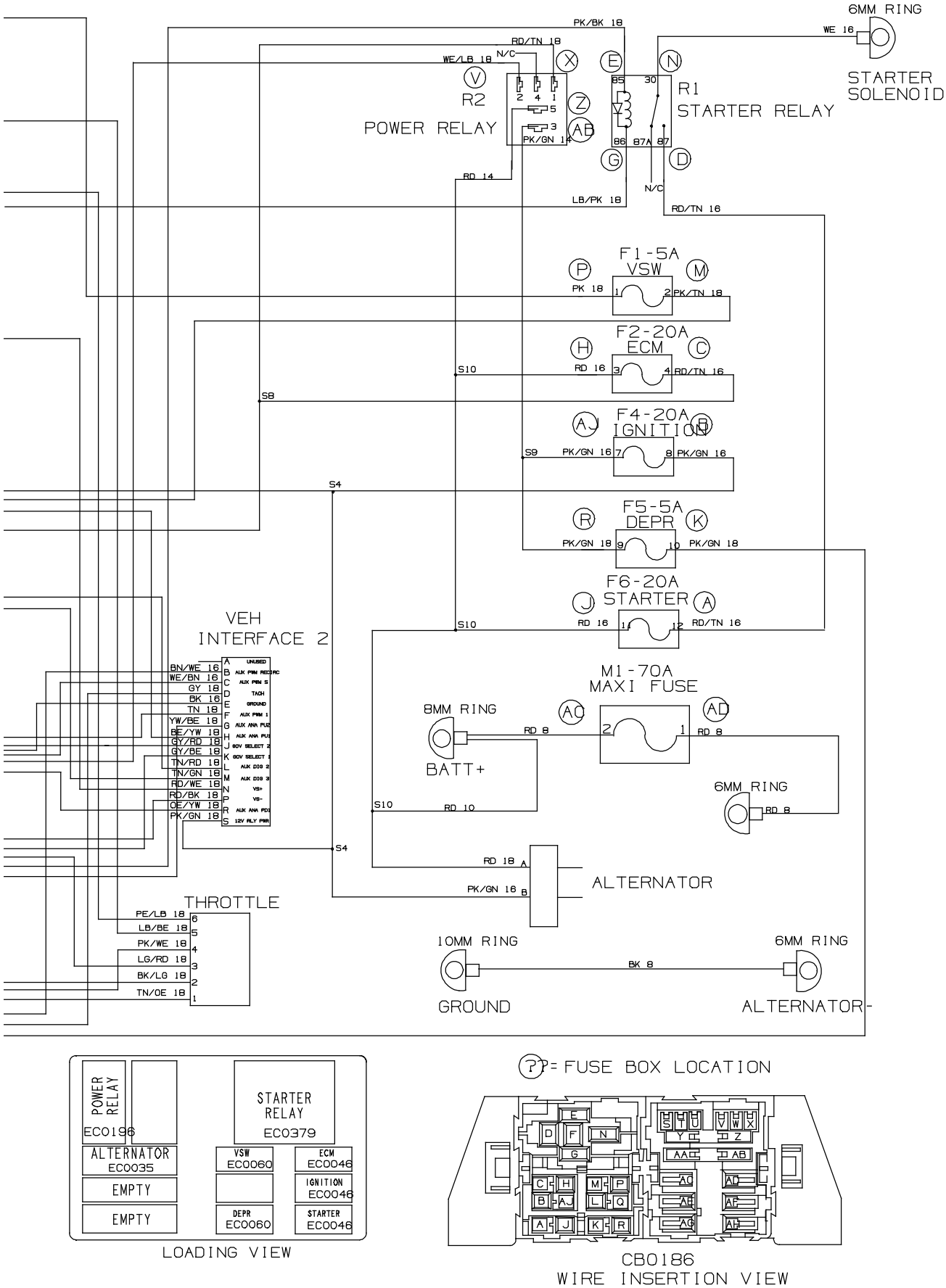

1071654- 356304

Fig. 88 - Electrical Wire Harnesses Group

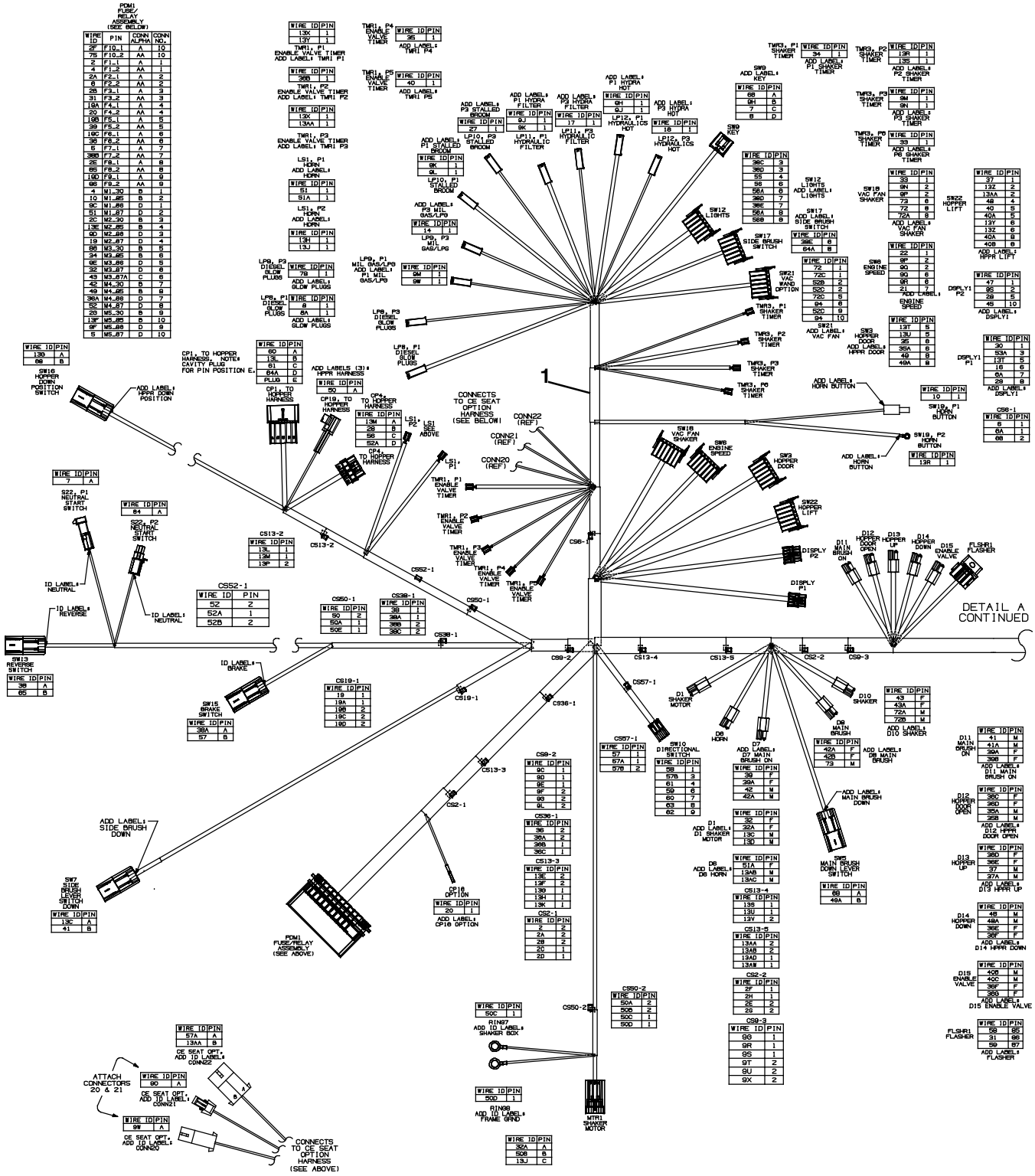

Fig. 88 - Electrical Wire Harnesses Group

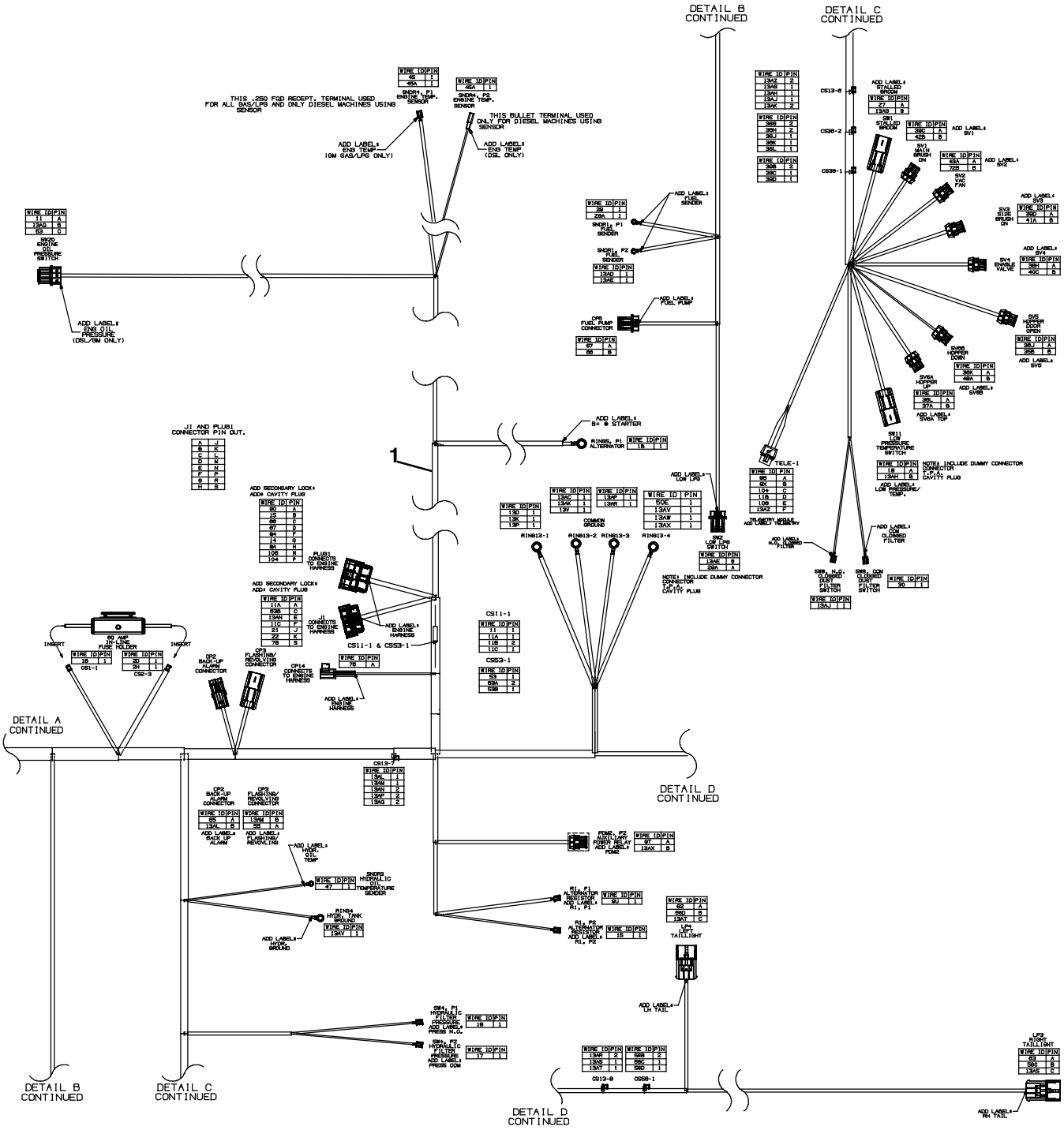

Fig. 88 - Electrical Wire Harnesses Group

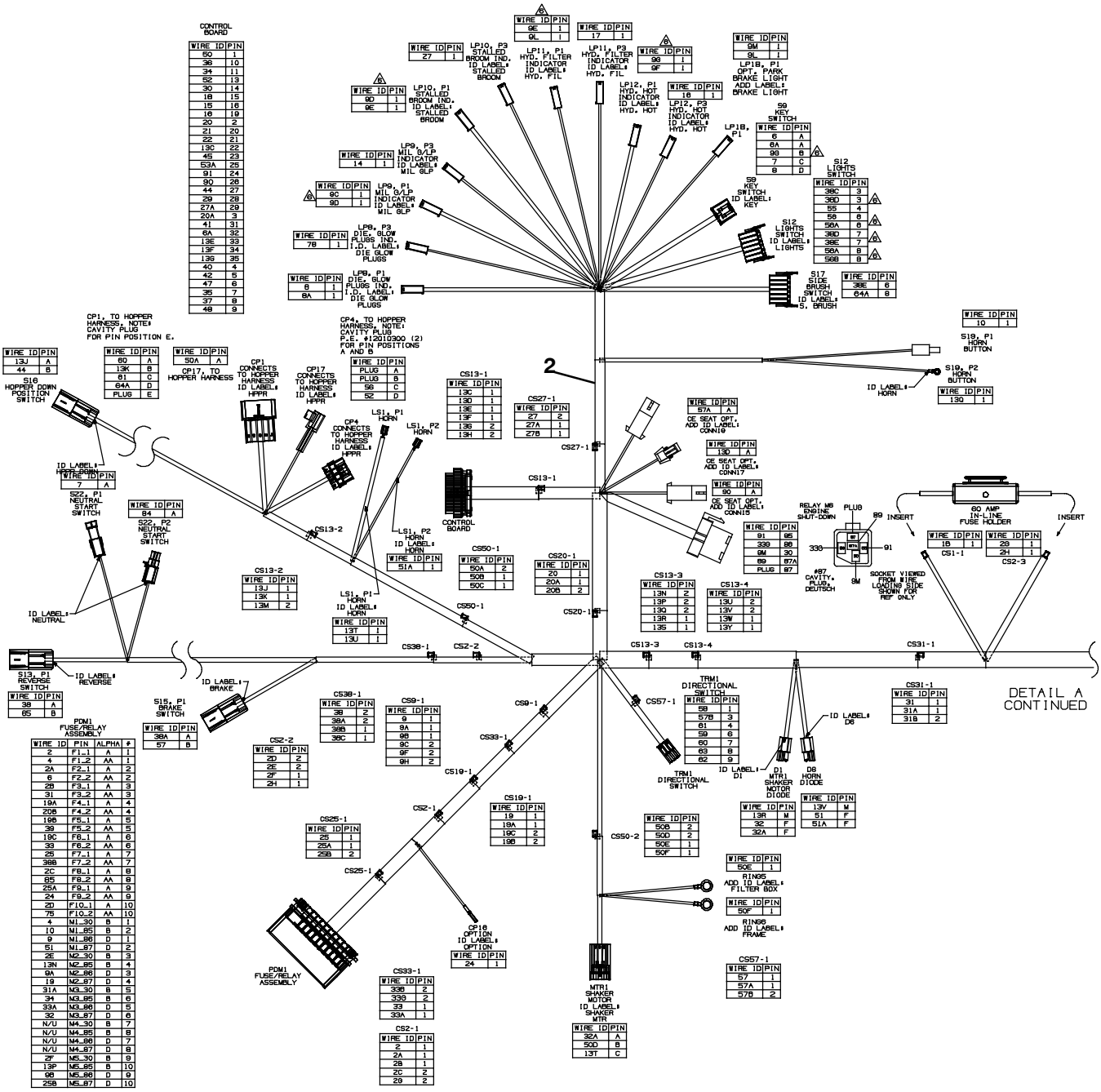

Fig. 88 - Electrical Wire Harnesses Group

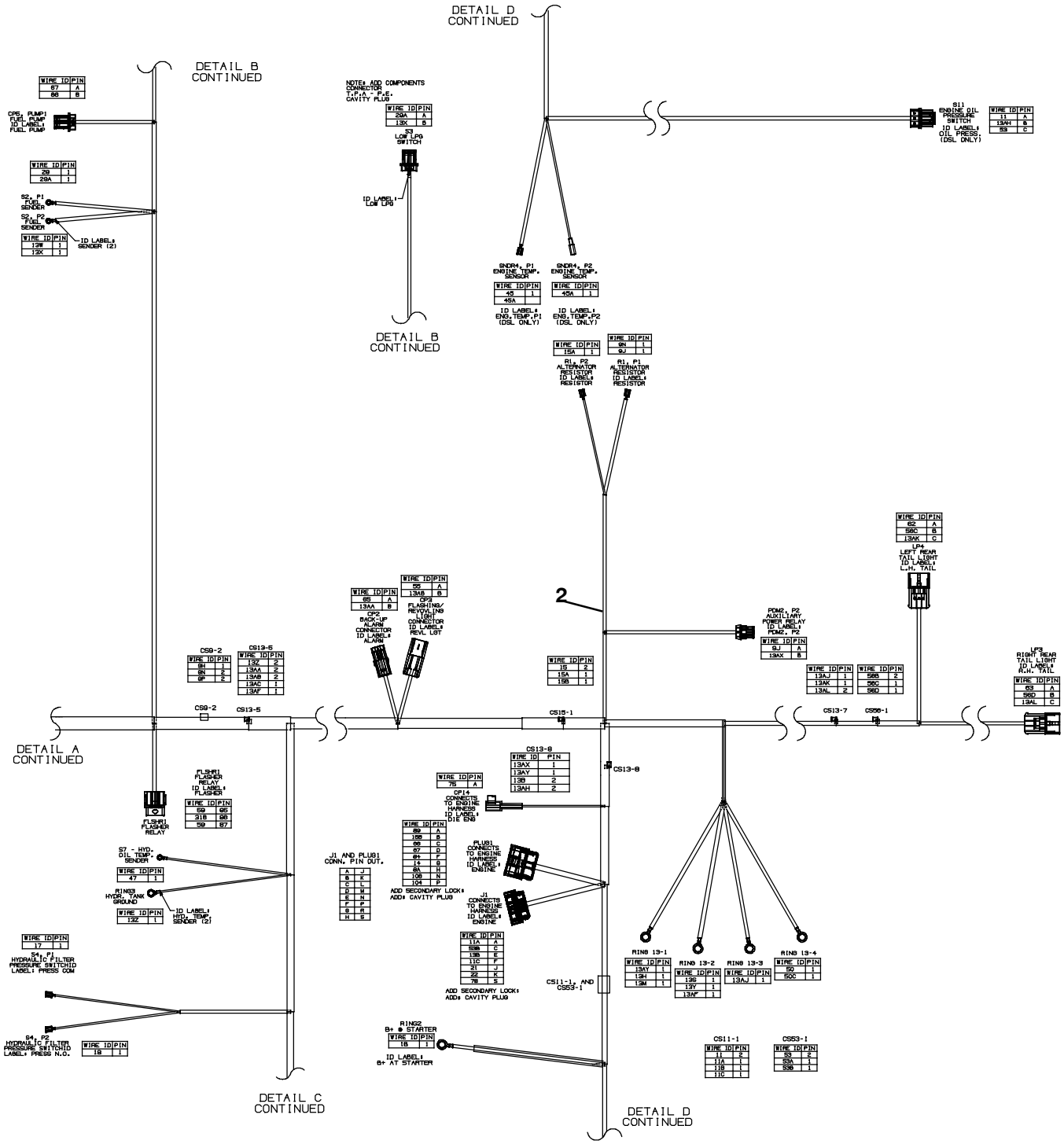

Fig. 88 - Electrical Wire Harnesses Group

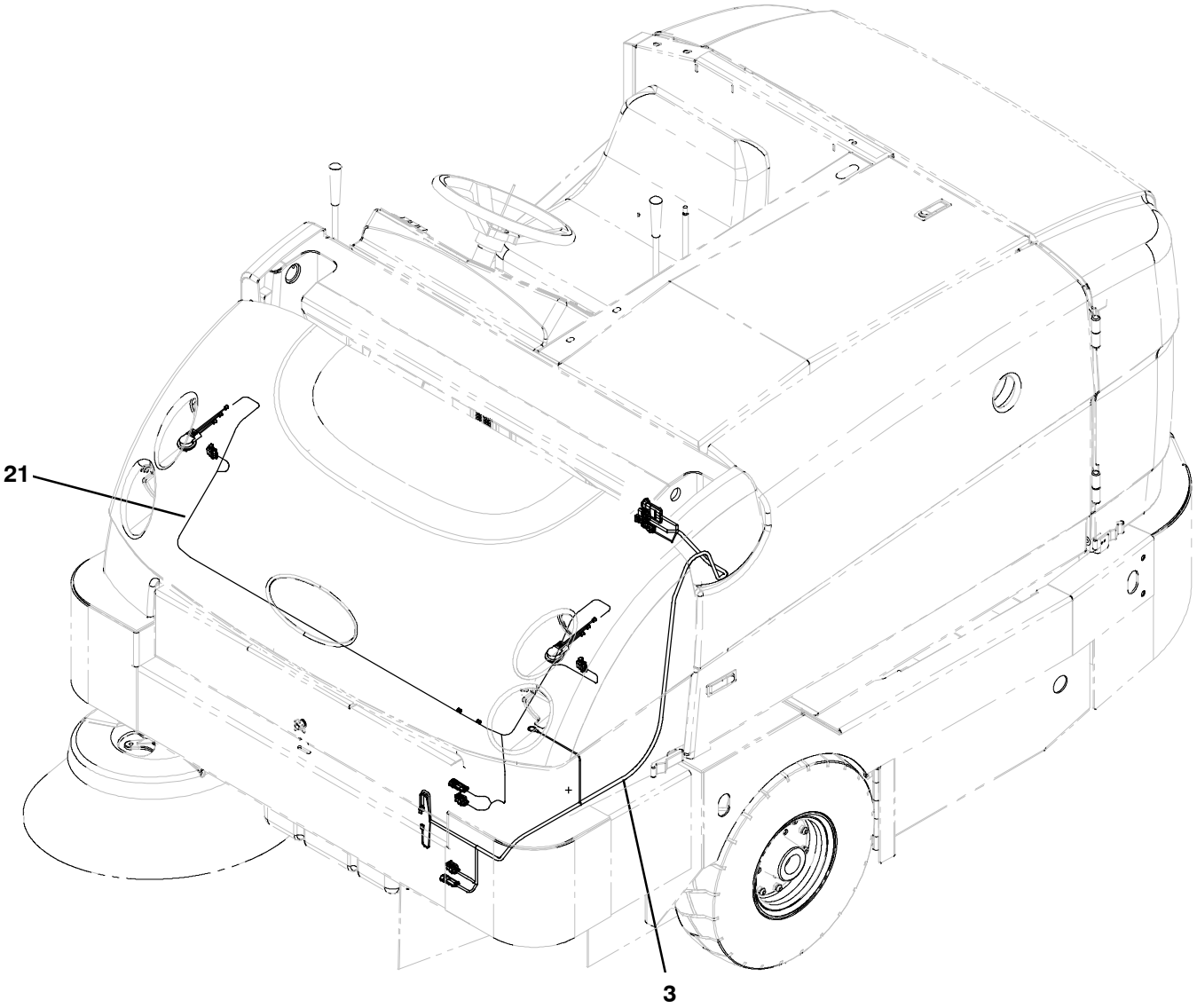

Fig. 88 - Electrical Wire Harnesses Group

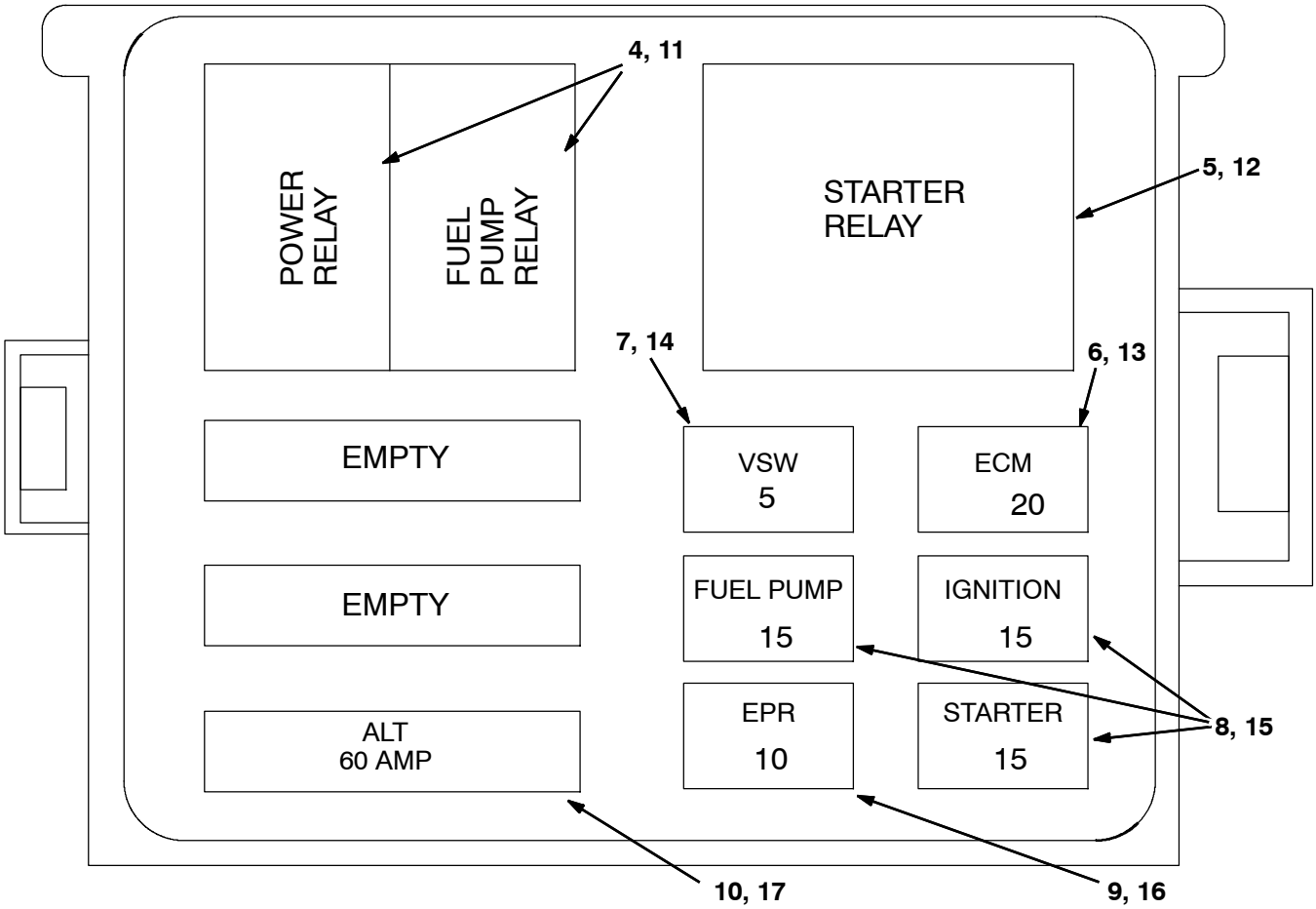

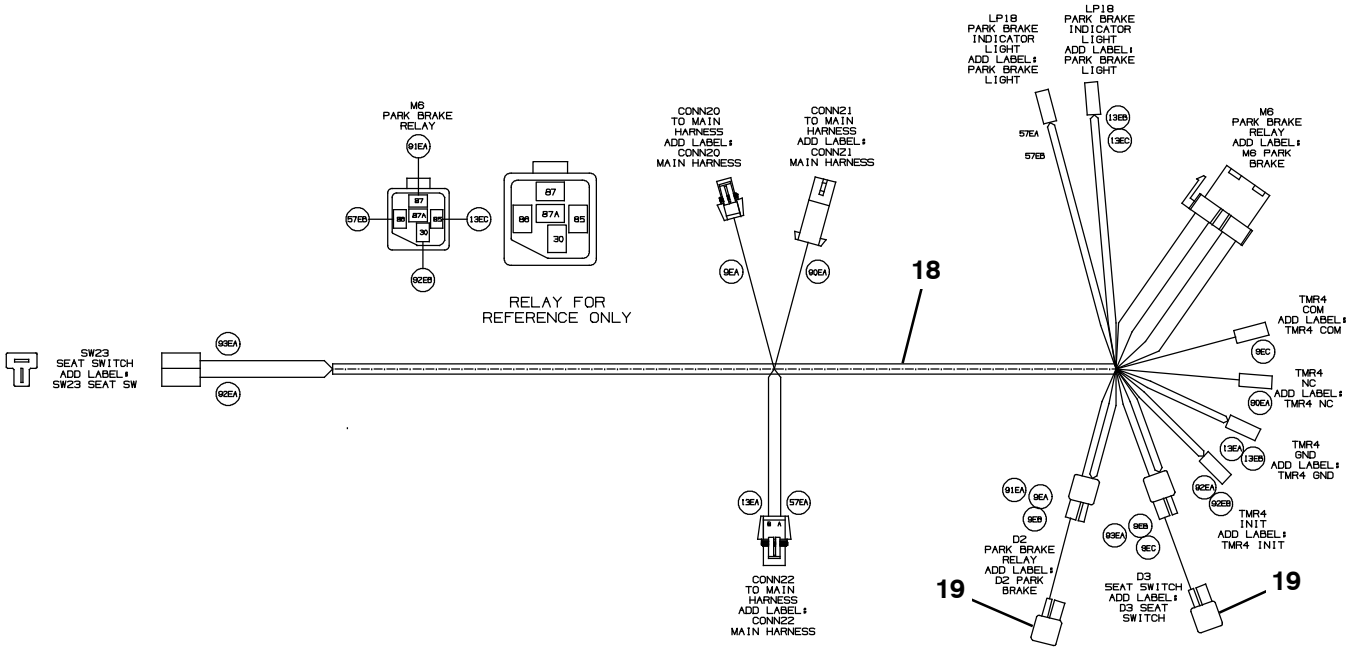

Fig. 88 - Electrical Wire Harnesses Group

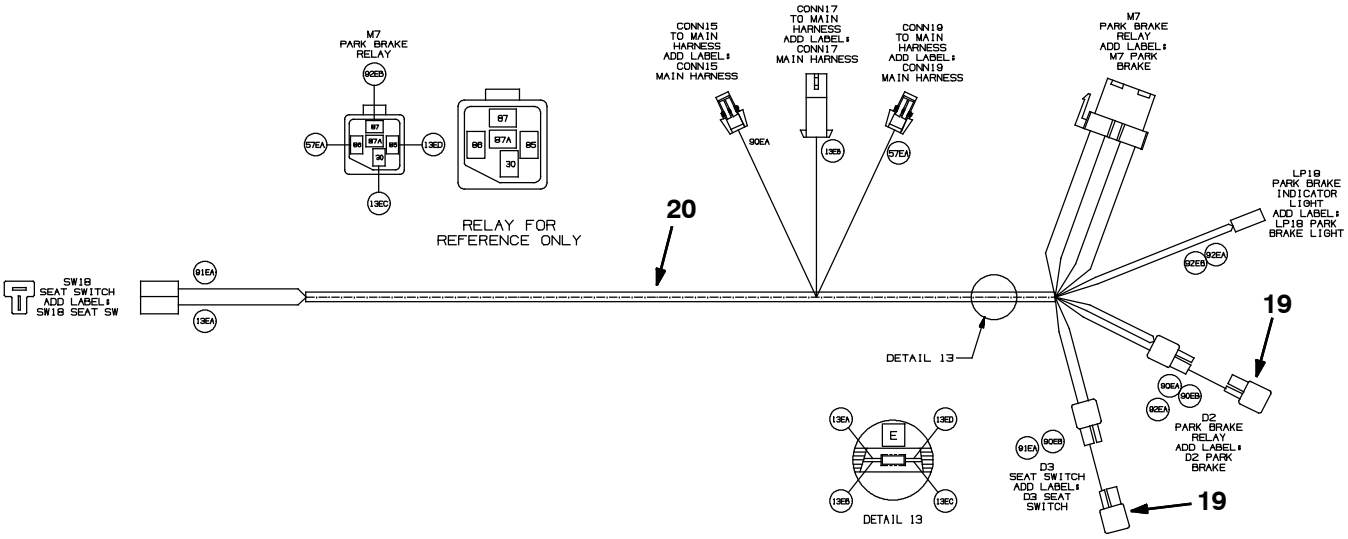

354732 - 354826 - 354827 - 356287

Fig. 88 - Electrical Wire Harnesses Group

	Ref.	Part No.	Serial Number	Description	Qty.
	1	1071857	(000000-)	Harness, Main,[S30] (S30 Only)	1
	2	1071860	(000000-)	Harness, Main, [S30 Xp] (S30 XP Only)	1
	3	1038387	(000000-)	Harness, Hppr [S30]	1
▽		384997	(000000-002003)	Harness, Wire, Eng, Gas [Gm 1.6L]	1
▲	4	394916	(000000-002003)	Relay, 12vdc, 20a, Spdt	2
▲	5	57804	(000000-002003)	Relay, 12vdc, 40a, Spdt	1
▲	6	372237	(000000-002003)	Fuse, 20 Amp, [Min-20]	1
▲	7	372235	(000000-002003)	Fuse, 5 Amp, [Min-5]	1
▲	8	372236	(000000-002003)	Fuse, 15 Amp, [Min-15]	2
▲	9	384999	(000000-002003)	Fuse, 10 Amp	1
▲	10	384998	(000000-002003)	Fuse, 60 Amp	1
▽		384990	(000000-002003)	Harness, Wire, Eng, Lpg [Gm 1.6l]	1
▲	11	394916	(000000-002003)	Relay, 12vdc, 20a, Spdt	2
▲	12	57804	(000000-002003)	Relay, 12vdc, 40a, Spdt	1
▲	13	372237	(000000-002003)	Fuse, 20 Amp, [Min-20]	1
▲	14	372235	(000000-002003)	Fuse, 5 Amp, [Min-5]	1
▲	15	372236	(000000-002003)	Fuse, 15 Amp, [Min-15]	2
▲	16	384999	(000000-002003)	Fuse, 10 Amp	1
▲	17	384998	(000000-002003)	Fuse, 60 Amp	1
	18	1047618	(000000-)	Harness, Switch, Seat, Ce [S30] (CE Only)	1
	19	222290	(000000-)	Diode, Ele, Plug (CE Only)	2
	20	1047619	(000000-)	Harness, Switch, Seat, Ce [S30 Xp] (CE Only) (S30XP Only)	2
	21	1033520	(000000-)	Harness, Cover, Hppr [S30]	1
▽		1063457	(002004-005699)	Harness, Wire, Eng, Gas [Gm 1.6L]	1
▲	4	394916	(002004-005699)	Relay, 12vdc, 20a, Spdt	2
▲	5	57804	(002004-005699)	Relay, 12vdc, 40a, Spdt	1
▲	6	372237	(002004-005699)	Fuse, 20 Amp, [Min-20]	1
▲	7	372235	(002004-005699)	Fuse, 5 Amp, [Min-5]	1
▲	8	372236	(002004-005699)	Fuse, 15 Amp, [Min-15]	2
▲	9	384999	(002004-005699)	Fuse, 10 Amp	1
▲	10	384998	(002004-005699)	Fuse, 60 Amp	1
▽		1063456	(002004-005699)	Harness, Wire, Eng, Lpg [Gm 1.6l]	1
▲	11	394916	(002004-005699)	Relay, 12vdc, 20a, Spdt	2
▲	12	57804	(002004-005699)	Relay, 12vdc, 40a, Spdt	1
▲	13	372237	(002004-005699)	Fuse, 20 Amp, [Min-20]	1
▲	14	372235	(002004-005699)	Fuse, 5 Amp, [Min-5]	1
▲	15	372236	(002004-005699)	Fuse, 15 Amp, [Min-15]	2
▲	16	384999	(002004-005699)	Fuse, 10 Amp	1
▲	17	384998	(002004-005699)	Fuse, 60 Amp	1
		1071653	(005700-)	Harness, Wire, Eng, Gas [Mit, 2.0l]	1
		1071654	(005700-)	Harness, Wire, Eng, Lpg [Mit, 2.Ol]	1

Fig. 89 - Label Group

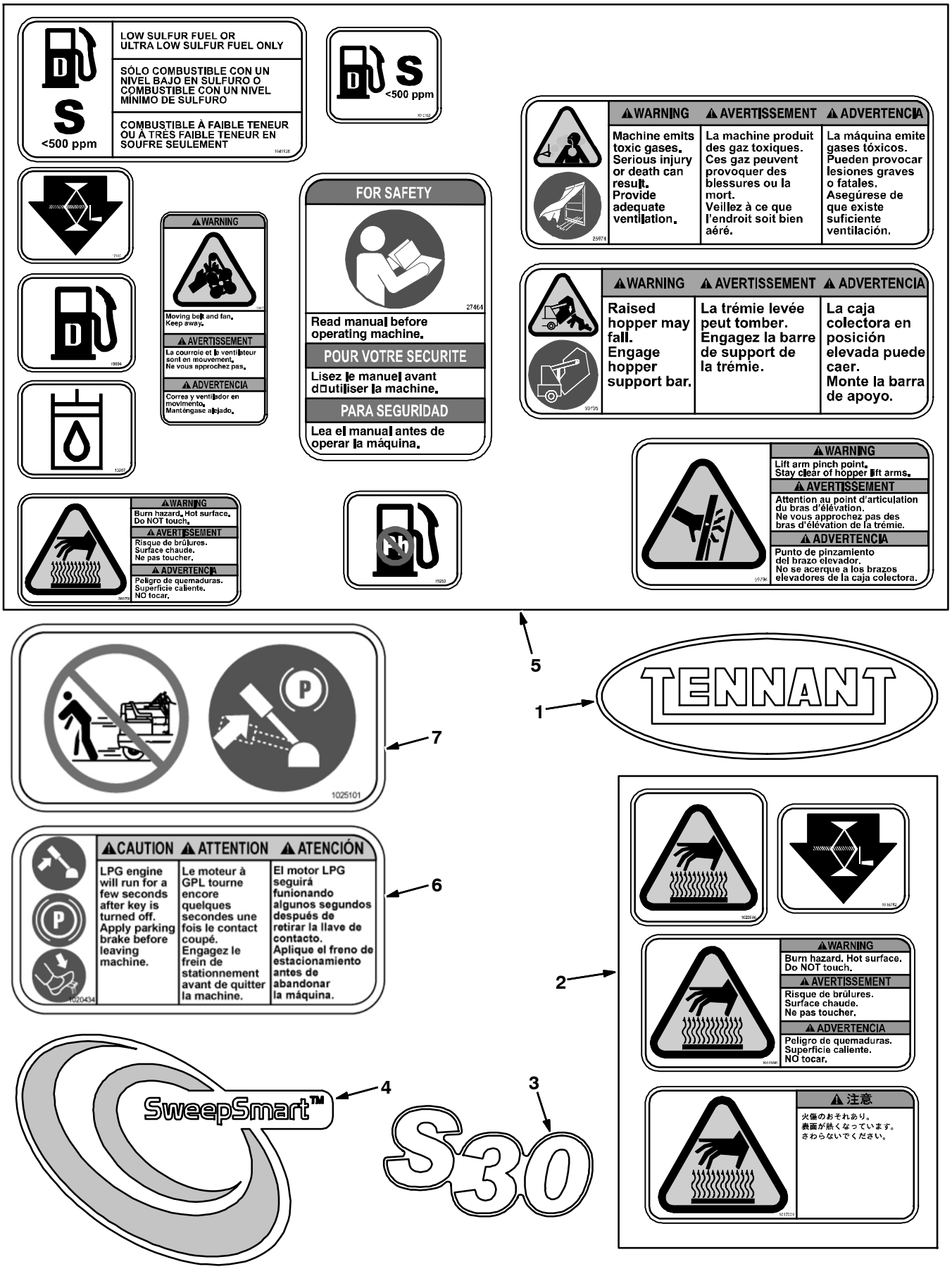

Fig. 89 - Label Group

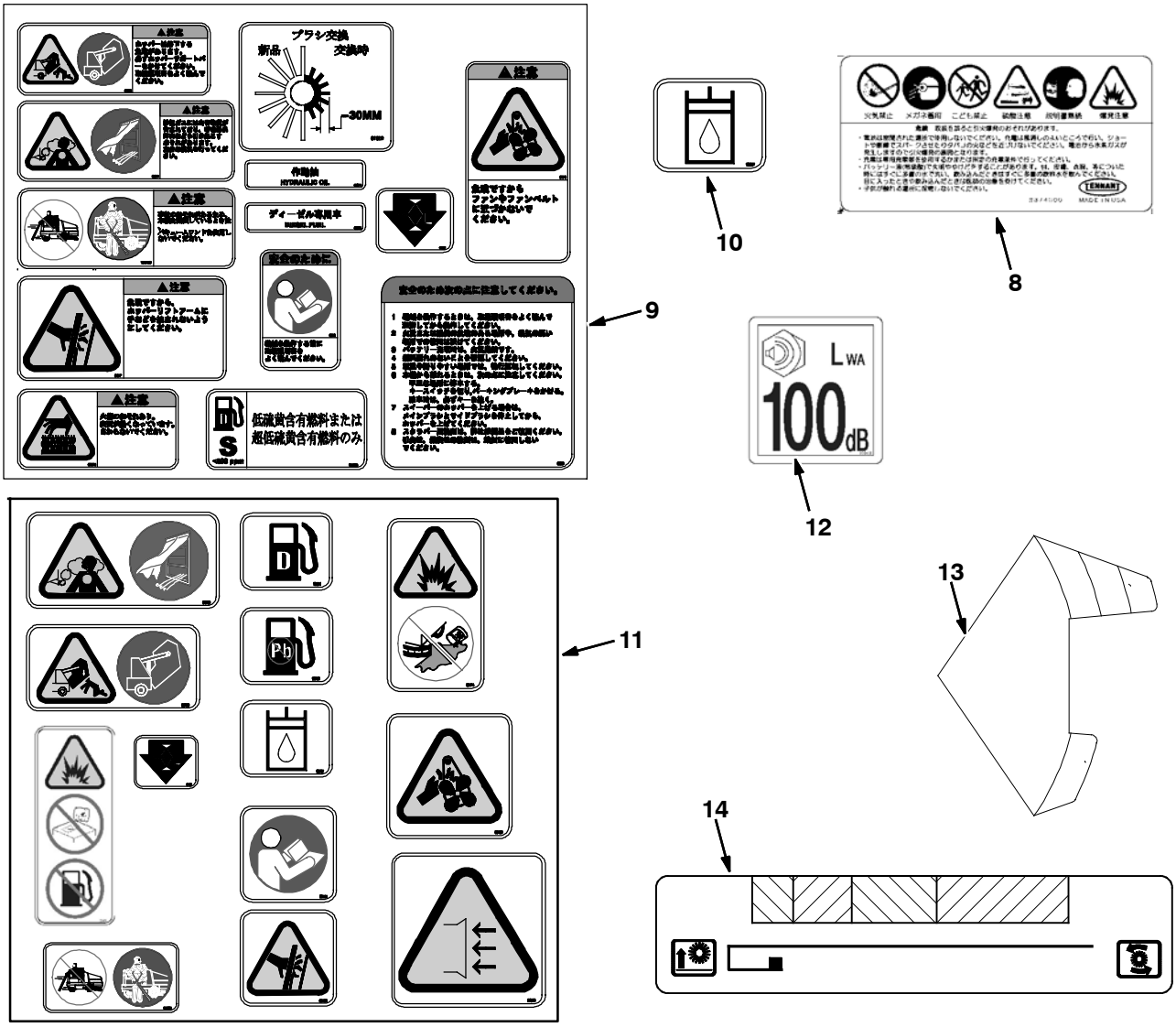

Ref.	Part No.	Serial Number	Description	Qty.
1	86877	(000000-002099)	Label, Logo, 10.4l, White [Tennant]	1
1	1047741	(002100-)	Label, Logo, 10.4l, White [Tennant]	1
2	1017141	(000000-)	Label Set, Hi Temp	1
3	1043372	(000000-002099)	Label, White [S30]	3
3	1061047	(002100-)	Label, White [S30]	3
4	1043373	(000000-002099)	Label, Cyclone [S30]	3
4	1061048	(002100-)	Label, Cyclone [S30]	3
5	59767	(000000-)	Label Set, Info/Hzrd [Multi-Mach]	1
6	1020434	(000000-)	Label, Caution [Apply Parking Brake]	1
7	1025101	(000000-)	Label, Caution [Apply Parking Brake] (CE and Japan Only)	1
8	374000	(000000-)	Label, Caution, Battery, Tj (Japan Only)	1
9	72381	(000000-)	Label Set, Info/Hzrd, Misc, Tj (Japan Only)	1
10	19207	(000000-)	Label, Info, Hyd Fluid, Na / Ce (Japan Only)	1
11	66188	(000000-)	Label Set, Info/Hzrd, Misc, Ce (CE Only)	1
12	398481	(000000-)	Label, Level, Sound [100 Db] (CE Only)	1
13	383203	(006501-)	Label, info, Arm Brush	1
14	383202	(006501-)	Label, Handle, Lift	1
	374224	(000000-)	Tape, Warning, Rh, Blk / Yel [33 Mtr] (CE Only)	1
	C460919	(000000-)	Tape, Warning, Left Blk/Yel [33 Mtr] (CE Only)	1

SECTION 3

Contents **Page**

Fig. 1 – Indoor Light Kit (000000–002099) . . 3–2
Fig. 2 – Indoor Light Kit (002100–) . . . 3–4
Fig. 3 – Outdoor Light Kit (000000–002099) 3–6
Fig. 4 – Outdoor Light Kit (002100–) . 3–8
Fig. 5 – Left Hand Side Brush Kit, S30 XP 3–10
Fig. 6 – Vacuum Wand Group 3–14
Fig. 7 – Blower Wand Group 3–16
Fig. 8 – Overhead Guard Kit (000000–002099) 3–18
Fig. 9 – Overhead Guard Kit (002100–) 3–20
Fig. 10 – Cab Group 3–22
Fig. 11 – Cab Cover Group 3–24
Fig. 12 – Cab Door Group 3–26
Fig. 13 – Cab Heater Group 3–28
Fig. 14 – Cab Air Conditioner Group (000000–005699) 3–30
Fig. 15 – Cab Air Conditioner Group (005700–) 3–32
Fig. 16 – Cab Fuel Cover Group (002100–) 3–34
Fig. 17 – Cab Wire Harness Group 3–36
Fig. 18 – Cab Wire Harness Electrical Schematic 3–37
Fig. 19 – Corner Bumper Kit (000000–002099) 3–38
Fig. 20 – Corner Bumper Kit (002100–) 3–39
Fig. 21 – Telemetry Group 3–40
Fig. 22 – Fire Extinguisher Kit 3–41
Fig. 23 – Documentation Group 3–42

Fig. 1 - Indoor Light Kit (000000-002099)

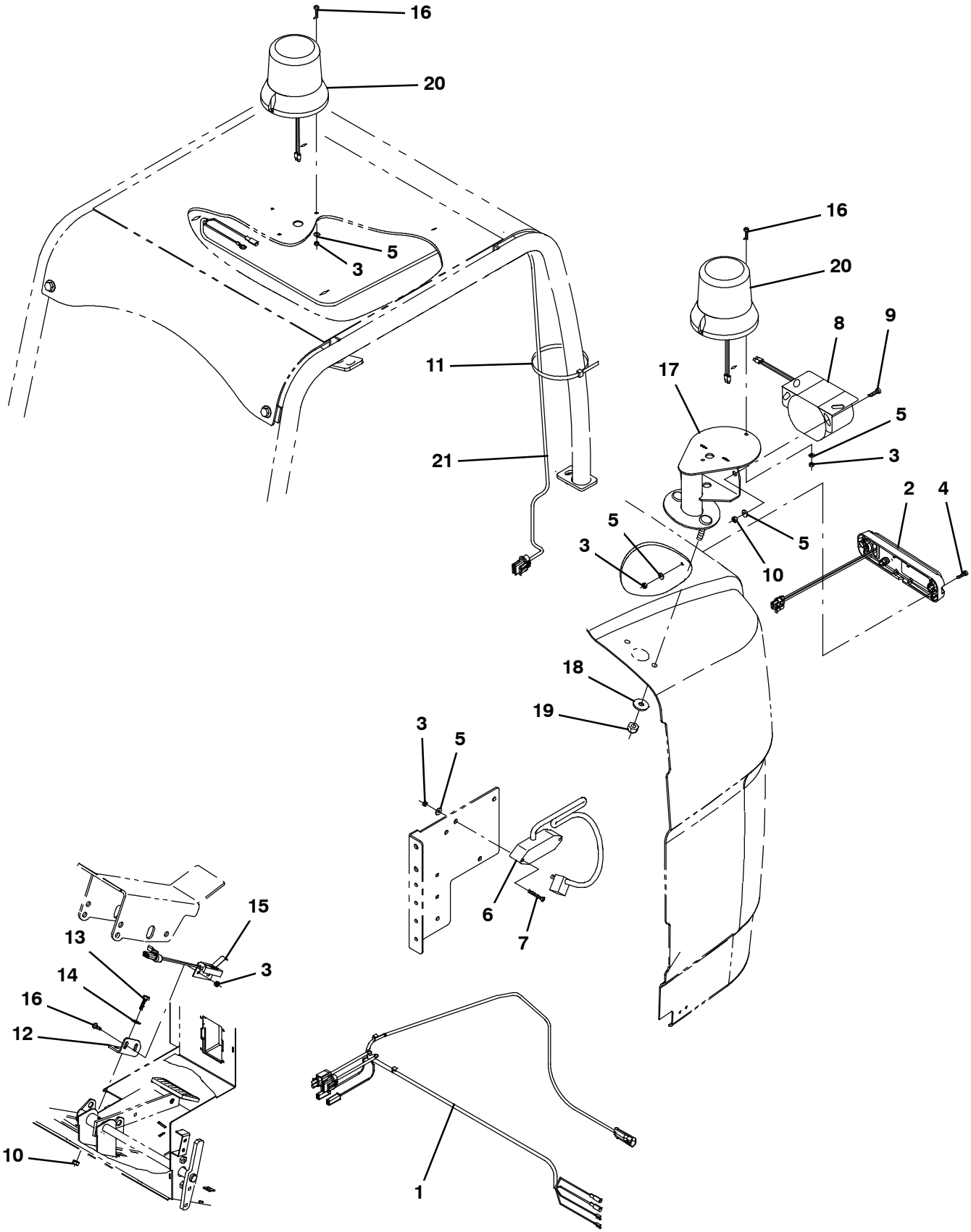

354758

Fig. 1 - Indoor Light Kit (000000-002099)

	Ref.	Part No.	Serial Number	Description	Qty.
▽		9003865	(000000-002099)	Light Kit, Inside, Ci [S30]	1
▲	1	1034191	(000000-002099)	Harness, Backup, Rev [S30]	1
▲	2	1036173	(000000-002099)	Light, Led, White, 12-24vdc	1
▲	3	06549	(000000-002099)	Nut, Hex, Lock, M5 X 0.80, Nl	6
▲	4	06935	(000000-002099)	Screw, Pan, Phl, M5 X 0.80 X 25, 4.8	2
▲	5	19066	(000000-002099)	Washer, Flat, 10	8
▲	6	1036985	(000000-002099)	Flasher, 12-80vdc, 2a	1
▲	7	06938	(000000-002099)	Screw, Pan, Phl, M5 X 0.80 X 40, 4.8	2
▲	8	9007131	(000000-002099)	Alarm Assy, Backup, 12-24vdc 82-107dba	1
▲	9	09145	(000000-002099)	Screw, Pan, Phl, M6 X 1.00 X 16, 4.8	2
▲	10	07785	(000000-002099)	Nut, Hex, Std, M6 X 1.00, Ss	4
▲	11	49266	(000000-002099)	Tie, Cable, Nyl, 07.3l .19w 1.8 Max D	4
▲	12	1036995	(000000-002099)	Bracket, Switch, Reverse	1
▲	13	08716	(000000-002099)	Screw, Hex, M6 X 1.00 X 20, Ss	2
▲	14	32483	(000000-002099)	Washer, Flat, 0.25, Sae	2
▲	15	1039735	(000000-002099)	Switch, Snap, 15a No	1
▲	16	06933	(000000-002099)	Screw, Pan, Phl, M5 X 0.80 X 16, 4.8	4
▲	17	1036111	(000000-002099)	Bracket Wldt, Light, Flsh	1
▲	18	13248	(000000-002099)	Washer, Flat, 0.40b 1.12d .12, Stl, Pl	2
▲	19	08714	(000000-002099)	Nut, Hex, Lock, M10 X 1.5, Nl, Ss	2
▲▽	20	82200	(000000-002099)	Light, Flsh, 12vdc, Amb, Rwk	1
▲▲		9000879	(000000-002099)	Lens, Amb, F/ Strobe / Flasher	1
▲▲		9000846	(000000-002099)	Lamp, Bulb, Flsh	1
▲▲		1027798	(000000-002099)	Lens, Red, F/ Strobe / Flasher	1
▲▲		1027800	(000000-002099)	Lens, Blu, F/ Strobe / Flasher	1
▲	21	1030973	(000000-002099)	Harness, Ohg [S30]	1

Fig. 2 - Indoor Light Kit (002100-)

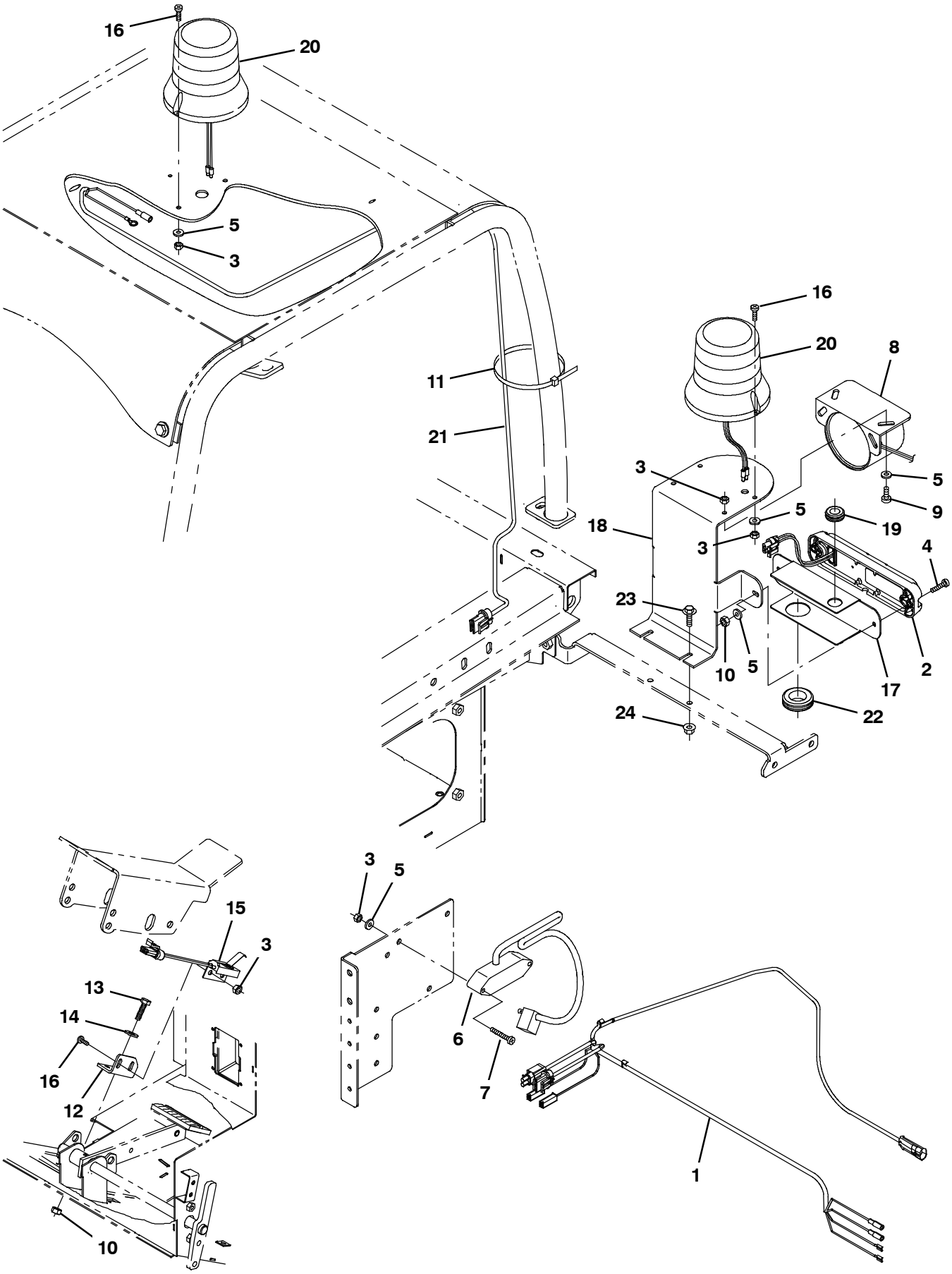

354758

Fig. 2 - Indoor Light Kit (002100-)

	Ref.	Part No.	Serial Number	Description	Qty.
▽		9008199	(002100-)	Light Kit, Inside, Ci [S30]	1
▲	1	1034191	(002100-)	Harness, Backup, Rev [S30]	1
▲	2	1036173	(002100-)	Light, Led, White, 12-24vdc	1
▲	3	06549	(002100-)	Nut, Hex, Lock, M5 X 0.80, Nl	6
▲	4	06935	(002100-)	Screw, Pan, Phl, M5 X 0.80 X 25, 4.8	2
▲	5	19066	(002100-)	Washer, Flat, 10	8
▲	6	9007181	(002100-)	Flasher, 12-80vdc, 2a	1
▲	7	06938	(002100-)	Screw, Pan, Phl, M5 X 0.80 X 40, 4.8	2
▲	8	9007131	(002100-)	Alarm Assy, Backup, 12-24vdc 82-107dba	1
▲	9	09145	(002100-)	Screw, Pan, Phl, M6 X 1.00 X 16, 4.8	2
▲	10	07785	(002100-)	Nut, Hex, Std, M6 X 1.00, Ss	4
▲	11	49266	(002100-)	Tie, Cable, Nyl, 07.3l .19w 1.8 Max D	4
▲	12	1036995	(002100-)	Bracket, Switch, Reverse	1
▲	13	08716	(002100-)	Screw, Hex, M6 X 1.00 X 20, Ss	2
▲	14	32483	(002100-)	Washer, Flat, 0.25, Sae	2
▲	15	1039735	(002100-)	Switch, Snap, 15a No	1
▲	16	06933	(002100-)	Screw, Pan, Phl, M5 X 0.80 X 16, 4.8	4
▲	17	1061203	(002100-)	Bracket, Light	1
▲	18	1061140	(002100-)	Bracket, Alarm, Backup	1
▲	19	10632-9	(002100-)	Grommet, Rbr, 0.63id, F/0.8h, .12 Matl	1
▲▽	20	82200	(002100-)	Light, Flsh, 12vdc, Amb, Rwk	1
▲▲		9000879	(002100-)	Lens, Amb, F/ Strobe / Flasher	1
▲▲		9000846	(002100-)	Lamp, Bulb, Flsh	1
▲▲		1027798	(002100-)	Lens, Red, F/ Strobe / Flasher	1
▲▲		1027800	(002100-)	Lens, Blu, F/ Strobe / Flasher	1
▲	21	1030973	(002100-)	Harness, Ohg [S30]	1
▲	22	10632-14	(002100-)	Grommet, Rbr, 1.00id, F/1.4h, .12 Matl	1
▲	23	1036892	(002100-)	Screw, Hex, M6 X 1.00 X 25, 9.8, Sems	2
▲	24	07790	(002100-)	Nut, Hex, Flng, M6 X 1.00	2

Fig. 3 - Outdoor Light Kit (000000-002099)

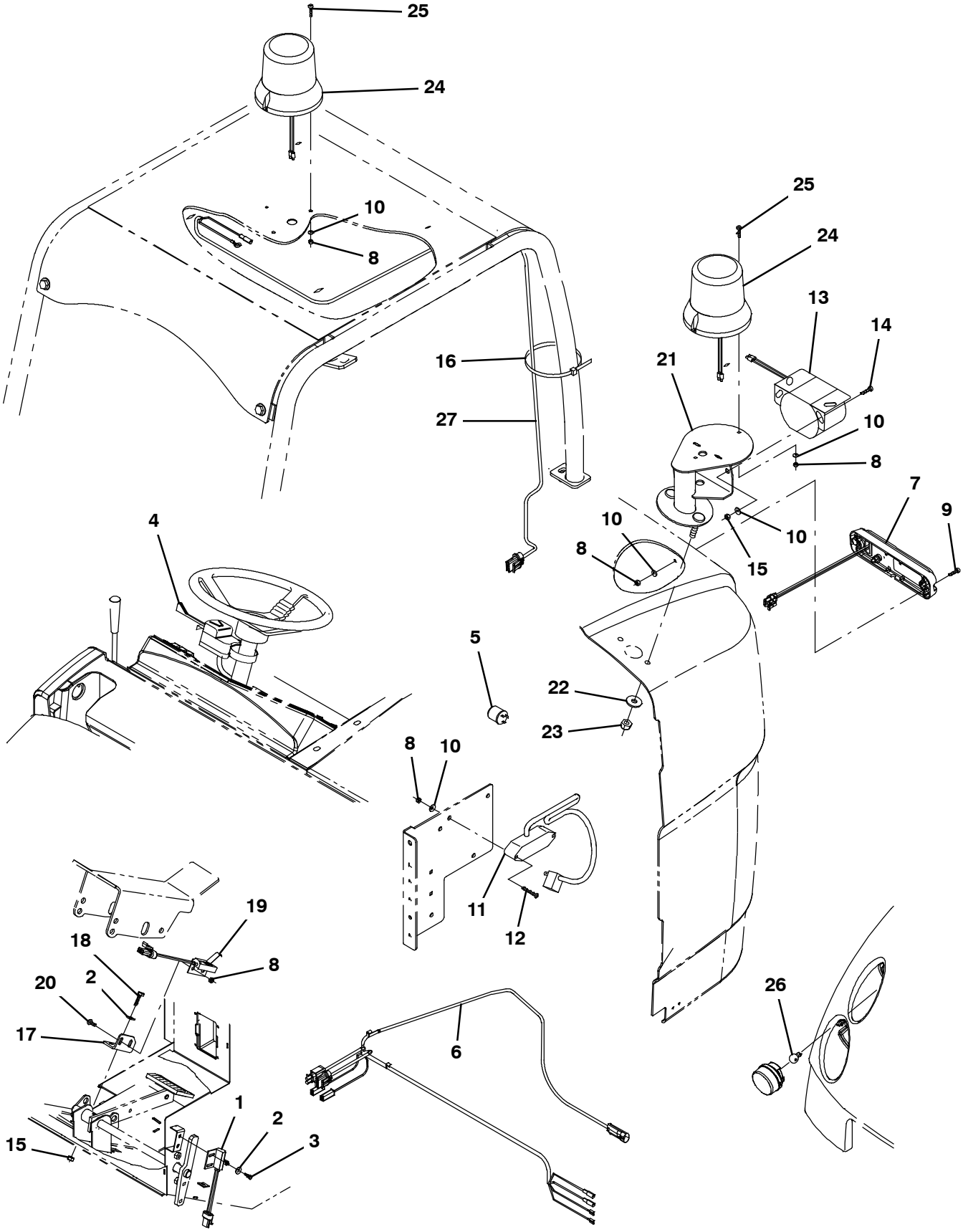

354757

Fig. 3 - Outdoor Light Kit (000000-002099)

	Ref.	Part No.	Serial Number	Description	Qty.
▽		9003805	(000000-002099)	Light Kit, outdoor, Ci [S30]	1
▲	1	1040019	(000000-002099)	Switch, Limit, 15a, Nc	1
▲	2	32483	(000000-002099)	Washer, Flat, 0.25, Sae	4
▲	3	09244	(000000-002099)	Screw, Hex, M5 X 0.80 X 16, 8.8	2
▲	4	60751	(000000-002099)	Switch, Turn Signal	1
▲	5	31922	(000000-002099)	Flasher, Hd, 12vdc 25a [10-57300]	1
▲	6	1034191	(000000-002099)	Harness, Backup, Rev [S30]	1
▲	7	1036173	(000000-002099)	Light, Led, White, 12-24vdc	1
▲	8	06549	(000000-002099)	Nut, Hex, Lock, M5 X 0.80, Nl	8
▲	9	06935	(000000-002099)	Screw, Pan, Phl, M5 X 0.80 X 25, 4.8	2
▲	10	19066	(000000-002099)	Washer, Flat, 10	8
▲	11	1036985	(000000-002099)	Flasher, 12-80vdc, 2a	1
▲	12	06938	(000000-002099)	Screw, Pan, Phl, M5 X 0.80 X 40, 4.8	2
▲	13	9007131	(000000-002099)	Alarm Assy, Backup, 12-24vdc 82-107dba	1
▲	14	09145	(000000-002099)	Screw, Pan, Phl, M6 X 1.00 X 16, 4.8	2
▲	15	07785	(000000-002099)	Nut, Hex, Std, M6 X 1.00, Ss	4
▲	16	49266	(000000-002099)	Tie, Cable, Nyl, 07.3l .19w 1.8 Max D	4
▲	17	1036995	(000000-002099)	Bracket, Switch, Reverse	1
▲	18	08716	(000000-002099)	Screw, Hex, M6 X 1.00 X 20, Ss	2
▲	19	1039735	(000000-002099)	Switch, Snap, 15a No	1
▲	20	06933	(000000-002099)	Screw, Pan, Phl, M5 X 0.80 X 16, 4.8	2
▲	21	1036111	(000000-002099)	Bracket Wldt, Light, Flsh	1
▲	22	13248	(000000-002099)	Washer, Flat, 0.40b 1.12d .12, Stl, Pl	2
▲	23	08714	(000000-002099)	Nut, Hex, Lock, M10 X 1.5, Nl, Ss	2
▲▽	24	83159	(000000-002099)	Light, Strobe, Amb, 12-48vdc, Rwk	1
▲▲		9000879	(000000-002099)	Lens, Amb, F/ Strobe / Flasher	1
▲▲		9000845	(000000-002099)	Lamp, Bulb, Strobe	1
▲▲		1027798	(000000-002099)	Lens, Red, F/ Strobe / Flasher	1
▲▲		1027800	(000000-002099)	Lens, Blu, F/ Strobe / Flasher	1
▲	25	06933	(000000-002099)	Screw, Pan, Phl, M5 X 0.80 X 16, 4.8	2
▲	26	1036183	(000000-002099)	Lamp, Clr, 12vdc [#3157 Series]	2
▲	27	1030973	(000000-002099)	Harness, Ohg [S30]	1

Fig. 4 - Outdoor Light Kit (002100-)

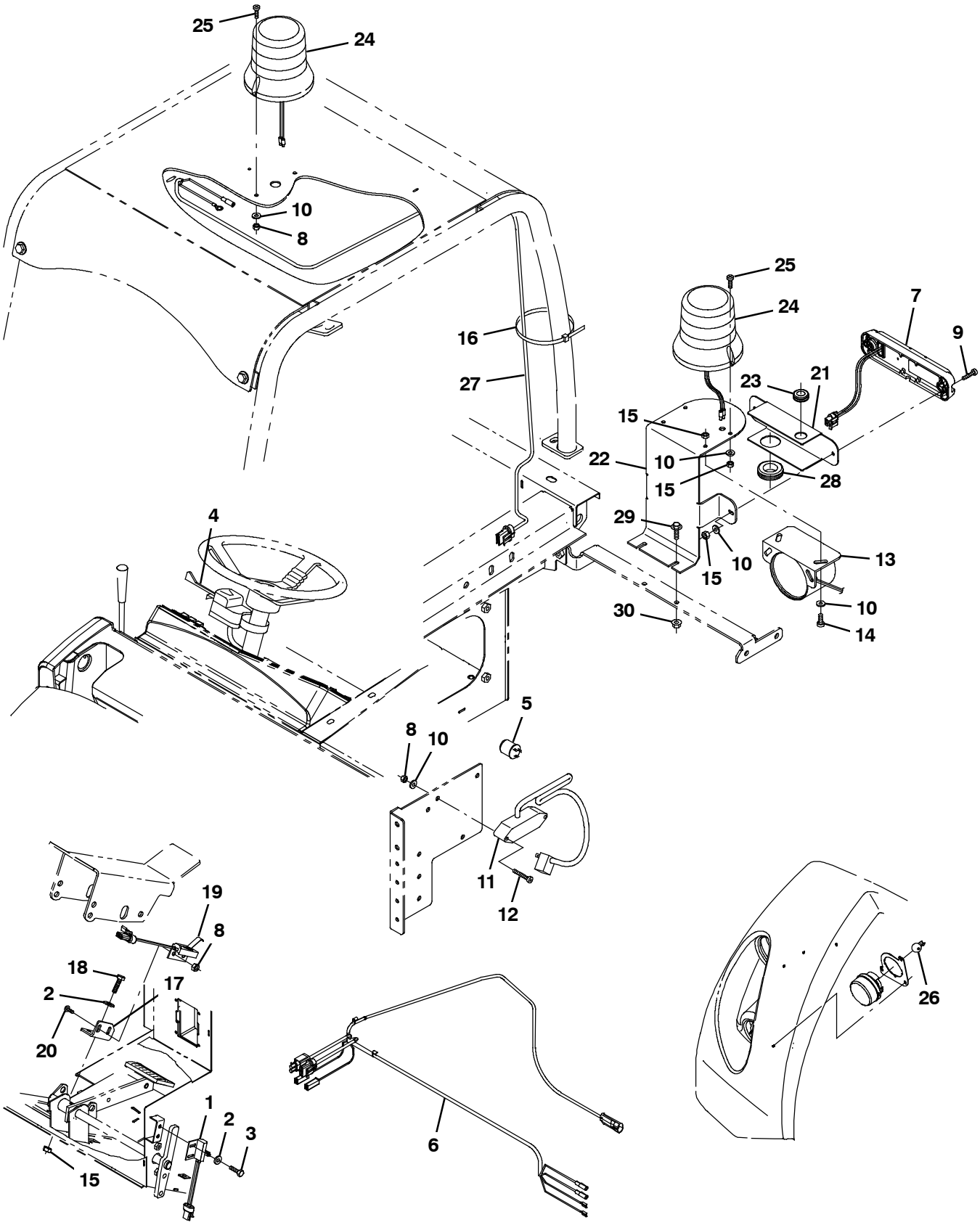

354757

Fig. 4 - Outdoor Light Kit (002100-)

	Ref.	Part No.	Serial Number	Description	Qty.
▽		9008198	(002100-)	Light Kit, outdoor, Ci [S30]	1
▲	1	1040019	(002100-)	Switch, Limit, 15a, Nc	1
▲	2	32483	(002100-)	Washer, Flat, 0.25, Sae	4
▲	3	09244	(002100-)	Screw, Hex, M5 X 0.80 X 16, 8.8	2
▲	4	60751	(002100-)	Switch, Turn Signal	1
▲	5	31922	(002100-)	Flasher, Hd, 12vdc 25a [10-57300]	1
▲	6	1034191	(002100-)	Harness, Backup, Rev [S30]	1
▲	7	1036173	(002100-)	Light, Led, White, 12-24vdc	1
▲	8	06549	(002100-)	Nut, Hex, Lock, M5 X 0.80, Nl	8
▲	9	06935	(002100-)	Screw, Pan, Phl, M5 X 0.80 X 25, 4.8	2
▲	10	19066	(002100-)	Washer, Flat, 10	8
▲	11	1036985	(002100-)	Flasher, 12-80vdc, 2a	1
▲	12	06938	(002100-)	Screw, Pan, Phl, M5 X 0.80 X 40, 4.8	2
▲	13	9007131	(002100-)	Alarm Assy, Backup, 12-24vdc 82-107dba	1
▲	14	09145	(002100-)	Screw, Pan, Phl, M6 X 1.00 X 16, 4.8	2
▲	15	07785	(002100-)	Nut, Hex, Std, M6 X 1.00, Ss	4
▲	16	49266	(002100-)	Tie, Cable, Nyl, 07.3l .19w 1.8 Max D	4
▲	17	1036995	(002100-)	Bracket, Switch, Reverse	1
▲	18	08716	(002100-)	Screw, Hex, M6 X 1.00 X 20, Ss	2
▲	19	1039735	(002100-)	Switch, Snap, 15a No	1
▲	20	06933	(002100-)	Screw, Pan, Phl, M5 X 0.80 X 16, 4.8	2
▲	21	1061203	(002100-)	Bracket, Light	1
▲	22	1061140	(002100-)	Bracket, Alarm, Backup	1
▲	23	10632-9	(002100-)	Grommet, Rbr, 0.63id, F/0.8h, .12 Matl	1
▲▽	24	83159	(002100-)	Light, Strobe, Amb, 12-48vdc, Rwk	1
▲▲		9000879	(002100-)	Lens, Amb, F/ Strobe / Flasher	1
▲▲		9000845	(002100-)	Lamp, Bulb, Strobe	1
▲▲		1027798	(002100-)	Lens, Red, F/ Strobe / Flasher	1
▲▲		1027800	(002100-)	Lens, Blu, F/ Strobe / Flasher	1
▲	25	06933	(002100-)	Screw, Pan, Phl, M5 X 0.80 X 16, 4.8	2
▲	26	1036183	(002100-)	Lamp, Clr, 12vdc [#3157 Series]	2
▲	27	1030973	(002100-)	Harness, Ohg [S30]	1
▲	28	10632-14	(002100-)	Grommet, Rbr, 1.00id, F/1.4h, .12 Matl	1
▲	29	1036892	(002100-)	Screw, Hex, M6 X 1.00 X 25, 9.8, Sems	2
▲	30	07790	(002100-)	Nut, Hex, Flng, M6 X 1.00	2

Fig. 5 - Left Hand Side Brush Kit, S30 XP

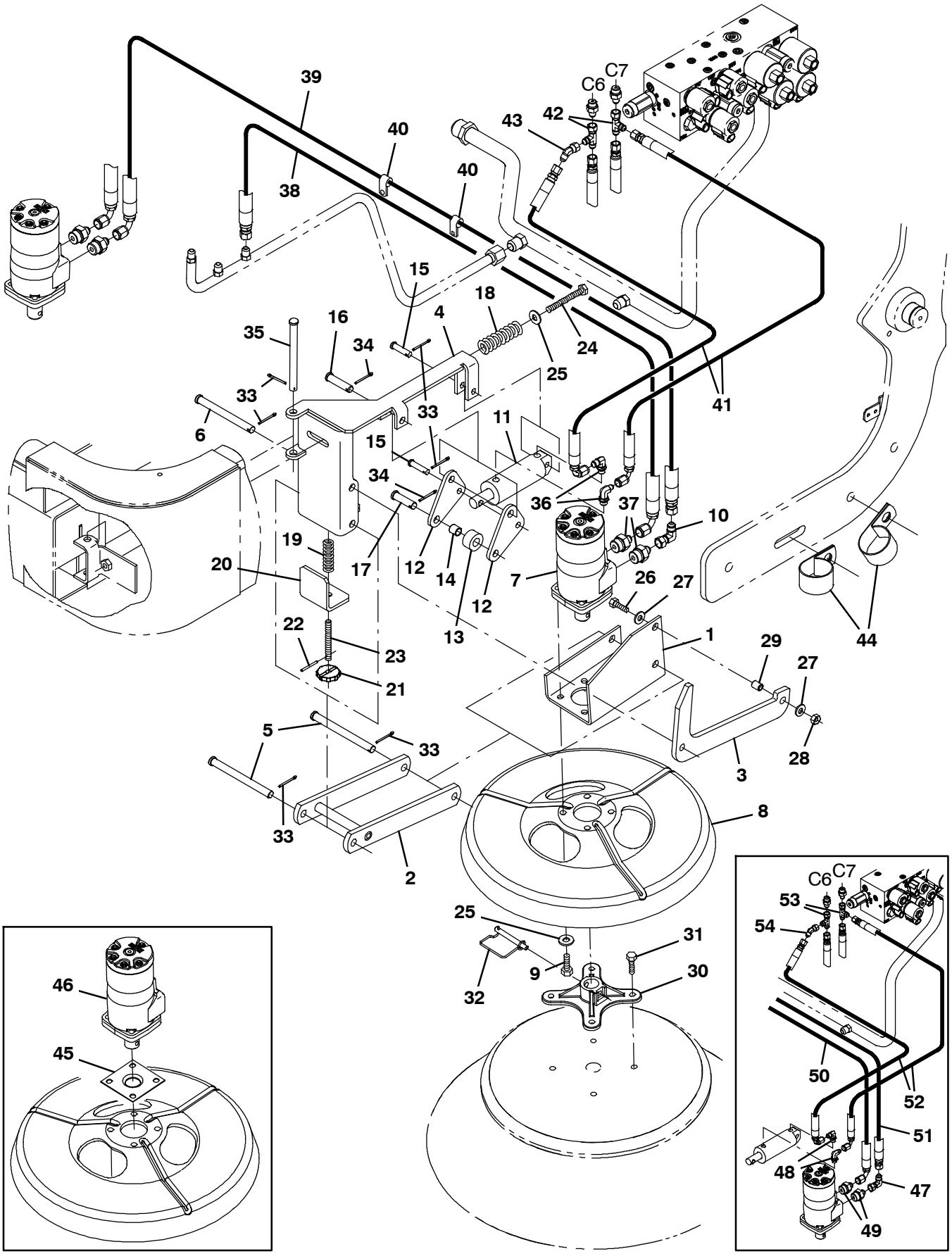

354739

Fig. 5 - Left Hand Side Brush Kit, S30 XP

	Ref.	Part No.	Serial Number	Description	Qty.
▽		9004070	(000000-)	Side Brush Kit, Lh, Ci [S30]	1
▲	1	1031916	(000000-)	Bracket, Mtg, Motor, Side Brush	1
▲	2	1029682	(000000-)	Arm Wldt, Brush, Side	1
▲	3	1026459	(000000-)	Arm, Linkage, Side Brush	1
▲	4	1039649	(000000-)	Pivot Wldt, Brush, Side	1
▲	5	51225	(000000-)	Pin, Clevis, 0.50d X 5.50l	2
▲	6	51538	(000000-)	Pin, Clevis, 0.50d X 5.00l	1
▲	7	1057338	(002134-)	Motor, Hyd, Gear, Int 17.9 Bi-Dir 2500	1
▲	8	1054256	(000000-)	Guard, Brush	1
▲	9	46559	(000000-)	Screw, Hex, .38-16 X 1.25, Nl	4
▲	10	313552	(003000-)	Fitting, Hyd, E90, Ff06/Fm06	1
▲	11	1041034	(000000-)	Cylinder, Hyd, 1.5b 06.3l 01.50strk 2500	1
▲	12	1026462	(000000-)	Lever, Lift, Brush	2
▲	13	1026525	(000000-)	Tube, 0.59id 1.25od 00.6l, Stl	1
▲	14	59634	(000000-)	Bushing, Sleeve, 0.50b 0.59d 0.62l, Fgl	1
▲	15	29558	(000000-)	Pin, Clevis, 0.37d X 1.50l	2
▲	16	51534	(000000-)	Pin, Clevis, 0.50d X 2.00l	1
▲	17	43290	(000000-)	Pin, Clevis, 0.50d X 1.75l	1
▲	18	45261	(000000-)	Spring, Cmpr, 0.97od .11wir 02.5l	1
▲	19	22290	(000000-)	Spring, Cmpr, 0.72od .06wir 02.3l	1
▲	20	1036333	(000000-)	Angle	1
▲	21	1039141	(000000-)	Knob	1
▲	22	13865	(000000-)	Pin, Roll, .125d X 1.25l, .125/.129	1
▲	23	1039199	(000000-)	Rod, Thrd, M10x1.5 80l	1
▲	24	06965	(000000-)	Screw, Hex, M10 X 1.5 X 80, 8.8	1
▲	25	32492	(000000-)	Washer, Flat, 0.38, Std	5
▲	26	76570	(000000-)	Screw, Hex, M8 X 1.25 X 30, 8.8	1
▲	27	32491	(000000-)	Washer, Flat, 0.31, Std	2
▲	28	08709	(000000-)	Nut, Hex, Lock, M8 X 1.25, Nl	1
▲	29	80395	(000000-)	Sleeve, P/M, 0.31b 0.50d 0.7l [430ss]	1
▲	30	47501	(000000-)	Hub, Adapter, Brush, 1.00b	1
▲	31	39394	(000000-)	Screw, Hex, .31-09 X 1.25, Wood	4
▲	32	84581	(000000-)	Pin Assy, Side Brush W/ Clip	1
▲	33	08182	(000000-)	Pin, Cotter, .125 X 1.00	6
▲	34	39005	(000000-)	Pin, Cotter, .094 X 0.75	2
▲	35	222196	(000000-)	Pin, Clevis, 0.50d X 4.25l	1
▲	36	762427	(003000-)	Fitting, Hyd, E90, Fm04/Om04	2
▲	37	762439	(003000-)	Fitting, Hyd, Str, Fm06/Om10	2
▲	38	1067661	(003000-)	Hose, Hyd, Tc06, Ff06e90/Ff06str, 102.0	1
▲	39	1067662	(003000-)	Hose, Hyd, Tc08, Ff06e90/Ff06str, 120.0	1
▲	40	30407	(000000-)	Clip, Keeper, Open	2
▲	41	1067088	(003000-)	Hose, Hyd, Tc04, Ff04e90/Ff04str, 126.0	2
▲	42	767422	(003000-)	Fitting, Hyd, Tee, Ff04/Fm04/Fm04, Run	2
▲	43	1011123	(003000-)	Fitting, Hyd, E45, Ff04/Fm04	1
▲	44	53468	(000000-)	Clamp, Cable, Stl, 1.75d X 1.00w, 1hole	2
	45	16082	(000000-002133)	Guard, String, Motor, Brush	1
	46	379607	(000000-002133)	Motor, Hyd, Gear, Int 17.9 Bi-Dir 1500 (See Breakdowns)	1
	47	47504	(000000-002999)	Fitting, Hyd, E90, Jf06/Jm06	1
	48	77097	(000000-002999)	Fitting, Hyd, E90, Jm04/Om04	2

Fig. 5 - Left Hand Side Brush Kit, S30 XP

Ref.	Part No.	Serial Number	Description	Qty.
49	47508	(000000-002999)	Fitting, Hyd, Str, Jm06/Om10	2
50	396217	(000000-002999)	Hose, Hyd, Tc06, Jf06e90/Jf06str, 102.0	1
51	1043049	(000000-002999)	Hose, Hyd, Tc08, Jf06e90/Jf06str, 120.0	1
52	1036201	(000000-002999)	Hose, Hyd, Tc04, Jf04e90/Jf04str, 126.0	2
53	57988	(000000-002999)	Fitting, Hyd, Tee, Jf04/Jm04/Jm04, Run	2
54	68441	(000000-002999)	Fitting, Hyd, E45, Jf04/Jm04	1

Fig. 6 - Vacuum Wand Group

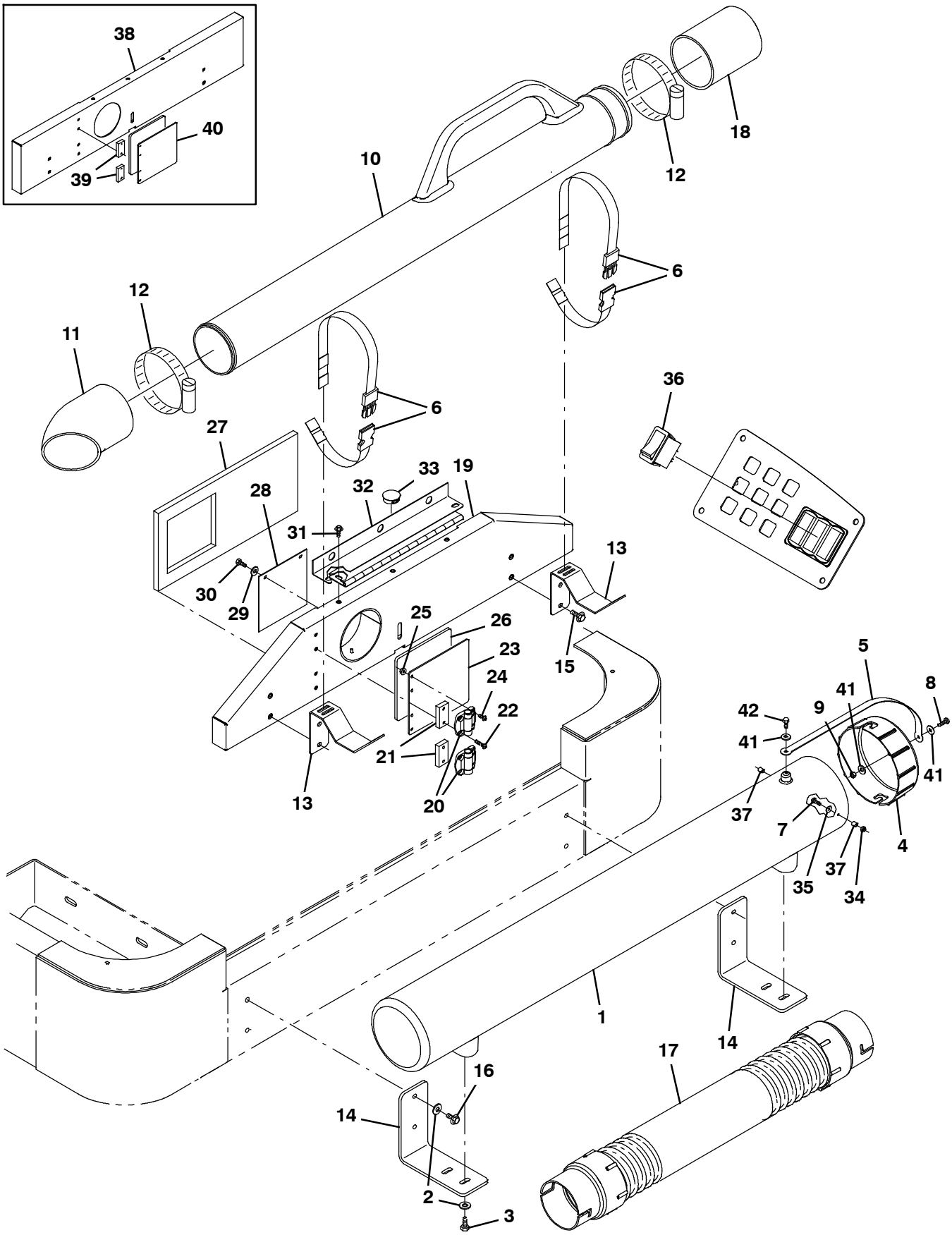

354742

Fig. 6 - Vacuum Wand Group

	Ref.	Part No.	Serial Number	Description	Qty.
	1	1032752	(000000-)	Tube, Hose	1
	2	32491	(000000-)	Washer, Flat, 0.31, Std	8
	3	16931	(000000-)	Screw, Hex, M8 X 1.25 X 20, 8.8	4
	4	1041473	(000000-)	Cap, Enclosure, Hose	1
	5	1041754	(000000-)	Strap, Cap, Enclosure	1
	6	367974	(000000-)	Strap, Pyp, 0.07 1.0w 18.5l, W/ Buckle	2
	7	06934	(000000-)	Screw, Pan, Phl, M5 X 0.80 X 20, 4.8	1
	8	09164	(000000-)	Screw, Pan, M6 X 1.00 X 20, 4.8	1
	9	08708	(000000-)	Nut, Hex, Lock, M6 X 1.00, Nl	1
	10	1032584	(000000-)	Wand, Vacuum	1
	11	1032707	(000000-)	Hose, Nozzle, Floor	1
	12	79380	(000000-)	Clamp, Hose, Wormdrive, 3.75-4.62d, .62w	2
	13	1047015	(000000-)	Bracket, Mtg, Wand	2
	14	1046993	(000000-)	Bracket, Mtg, Tube	2
	15	1020341	(000000-)	Screw, Hex, M8 X 1.25 X 20, Ss, Sems	8
	16	763045	(000000-)	Screw, Hex, M8 X 1.25 X 20, Fmg	4
	17	1042718	(000000-)	Hose Assy, W/2cuff, 4.0d 156l 4.0/4.0	1
	18	1041882	(000000-)	Hose, Rbr	1
▽		314427	(002100-)	Door Assy, Hppr, Vac Wand	1
▲	19	314421	(002100-)	Door Wldt, Hppr	1
▲	20	367950	(000000-)	Hinge, .40pin 2.2w 02.0l, 4/0.21h	2
▲	21	314432	(002100-)	Block, Spacer, Hinge	2
▲	22	06935	(000000-)	Screw, Pan, M5 X 0.80 X 25, 4.8	4
▲	23	314428	(002100-)	Door, Vacuum	1
▲	24	06932	(000000-)	Screw, Pan, Phl, M5 X 0.80 X 10, 4.8	4
▲	25	07789	(000000-)	Nut, Hex, Flng, M5 X 0.80	4
▲	26	1039007	(000000-)	Seal, Celr Rbr, .25, 06.0w 06.0l, Adh	1
▲	27	1035660	(000000-)	Gasket, Ure, .50, 07.47w, 15.47l, Adh	1
▲	28	1039038	(000000-)	Flap, Wand, Vacuum	1
▲	29	32490	(000000-)	Washer, Flat, 0.25, Std	2
▲	30	06942	(000000-)	Screw, Hex, M6 X 1.0 X 16, 8.8	2
▲	31	1040467	(002100-)	Screw, Hex, M6 X 1.00 X 20, 9.8, Sems	2
▲	32	1032545	(002100-)	Hinge Wldt	1
▲	33	76888	(002100-)	Plug, Hole, Rnd, 1.25h .03-.12, Blk Nyl	1
	34	06549	(000000-)	Nut, Hex, Lock, M5 X 0.80, Nl	2
	35	19066	(000000-)	Washer, Flat, 10	2
	36	397889	(000000-)	Switch, Rocker, Dpst, On / None / On (S30 Only)	1
	37	610943	(000000-)	Sleeve, P/M, 0.21b 0.32d 0.4l, Stl Pl	2
	38	1039067	(000000-002099)	Door Wldt, Vacuum	1
	39	1039020	(000000-002099)	Block, Spacer, Hinge	2
	40	1039008	(000000-002099)	Door, Vacuum	1
	41	32490	(000000-)	Washer, Flat, 0.25, Std	3
	42	06942	(000000-)	Screw, Hex, M6 X 1.00 X 16, 8.8	1

Fig. 7 - Blower Wand Group

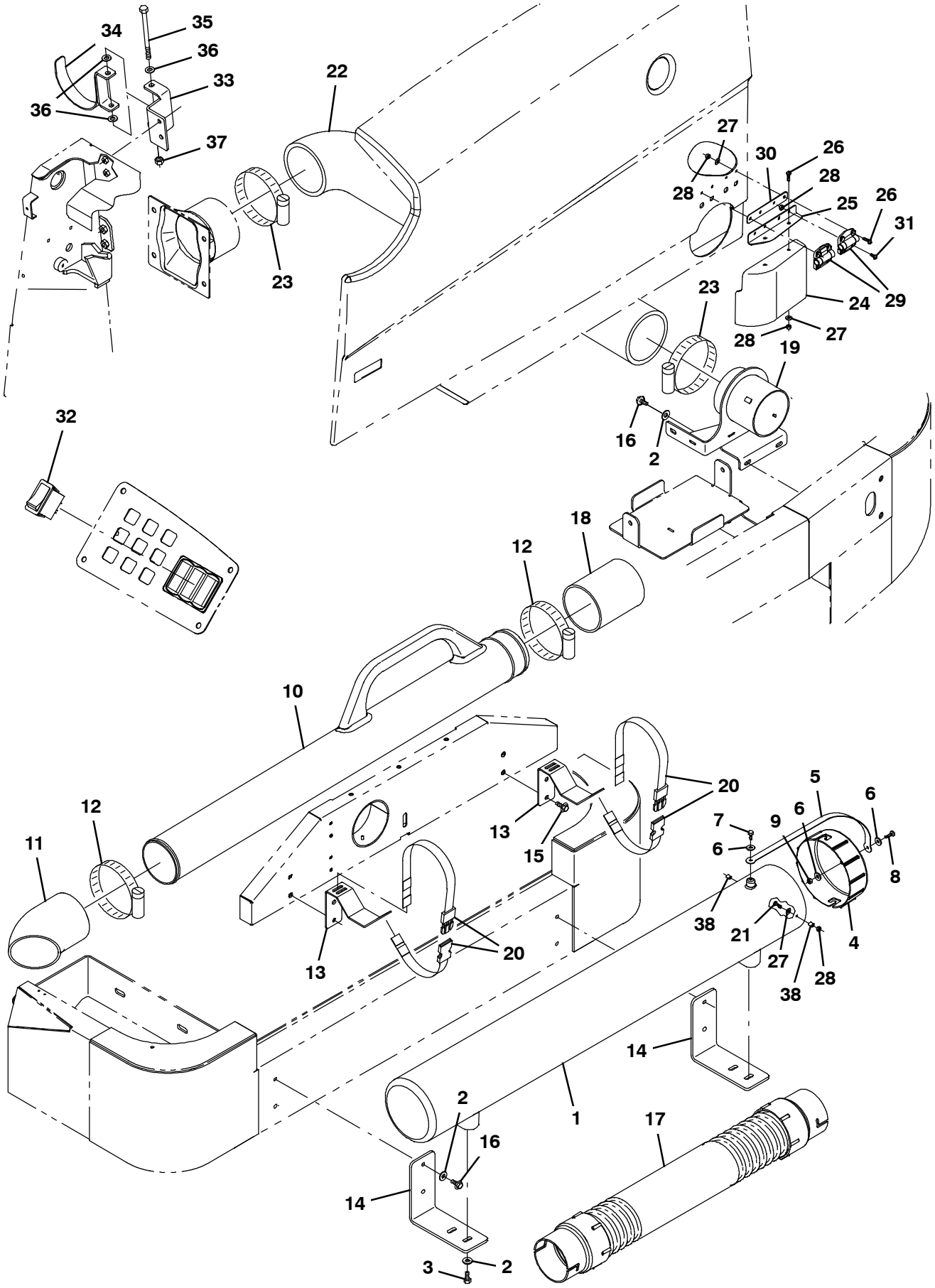

354744

Fig. 7 - Blower Wand Group

Ref.	Part No.	Serial Number	Description	Qty.
1	1032752	(000000-)	Tube, Hose	1
2	32491	(000000-)	Washer, Flat, 0.31, Std	11
3	16931	(000000-)	Screw, Hex, M8 X 1.25 X 20, 8.8	4
4	1041473	(000000-)	Cap, Enclosure, Hose	1
5	1041754	(000000-)	Strap, Cap, Enclosure	1
6	32490	(000000-)	Washer, Flat, 0.25, Std	3
7	06942	(000000-)	Screw, Hex, M6 X 1.0 X 16, 8.8	1
8	09164	(000000-)	Screw, Pan, M6 X 1.00 X 20, 4.8	1
9	08708	(000000-)	Nut, Hex, Lock, M6 X 1.00, Nl	1
10	1032584	(000000-)	Wand, Vacuum	1
11	1032707	(000000-)	Hose, Nozzle, Floor	1
12	79380	(000000-)	Clamp, Hose, Wormdrive, 3.75-4.62d, .62w	2
13	1047015	(000000-)	Bracket, Mtg, Wand	2
14	1046993	(000000-)	Bracket, Mtg, Tube	2
15	1020341	(000000-)	Screw, Hex, M8 X 1.25 X 20, Ss, Sems	4
16	763045	(000000-)	Screw, Hex, M8 X 1.25 X 20, Fmg	7
17	1042718	(000000-)	Hose Assy, W/2cuff, 4.0d 156l 4.0/4.0	1
18	1041882	(000000-)	Hose, Rbr	1
19	1041925	(000000-)	Tube Wldt, Door	1
20	367974	(000000-)	Strap, Pyp, 0.07 1.0w 18.5l, W/ Buckle	2
21	06934	(000000-)	Screw, Pan, Phl, M5 X 0.80 X 20, 4.8	2
22	1042831	(000000-)	Hose, Exhaust, Vacuum, 5.0id, 40.0l	1
23	367718	(000000-)	Clamp, Bridge, 5.0	2
24	1042493	(000000-)	Deflector, Air	1
25	1042511	(000000-)	Bracket, Mtg, Air Deflector	1
26	06933	(000000-)	Screw, Pan, M5 X 0.80 X 16, 4.8	6
27	19066	(000000-)	Washer, Flat, #10	8
28	06549	(000000-)	Nut, Hex, Lock, M5 X 0.80, Nl	12
29	1042868	(000000-)	Hinge, .40pin 2.2w 02.0l, 4/0.21h	2
30	1042518	(000000-)	Spacer, Hinge	1
31	09200	(000000-)	Screw, Pan, M5 X 0.8 X 12, Ss	4
32	397889	(000000-)	Switch, Rocker, Dpst, On / None / On (S30 Only)	1
33	1041944	(000000-)	Bracket, Hinge	1
34	1042661	(000000-)	Bracket Wldt, Wand	1
35	07819	(000000-)	Screw, Hex, M10 X 1.5 X 130, 8.8	1
36	52296	(000000-)	Washer, Flat, 0.40b 0.81d .06, Nyl	3
37	41430	(000000-)	Nut, Hex, Lock, M10 X 1.5, Nl	1
38	610943	(000000-)	Sleeve, P/M, 0.21b 0.32d 0.4l, Stl Pl	2

Fig. 8 - Overhead Guard Kit (000000-002099)

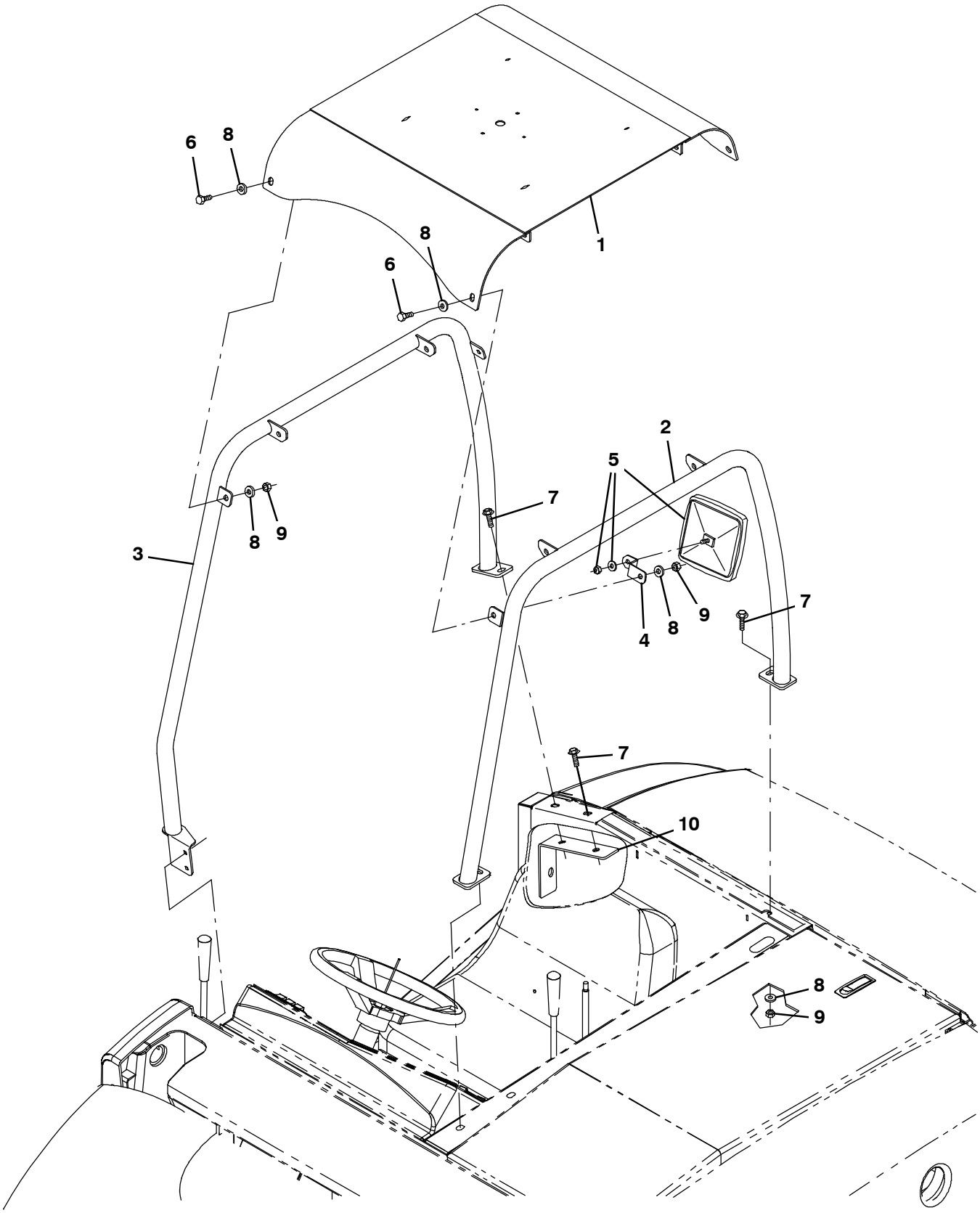

354736

Fig. 8 - Overhead Guard Kit (000000-002099)

	Ref.	Part No.	Serial Number	Description	Qty.
▽		9003635	(000000-002099)	Ohg Kit, Ci [S30]	1
▲	1	1032262	(000000-002099)	Guard Wldt, Ohg, Top	1
▲	2	1032067	(000000-002099)	Leg Wldt, Guard, Lh	1
▲	3	1032069	(000000-002099)	Leg Wldt, Guard, Rh	1
▲	4	1032722	(000000-002099)	Bracket, Mtg, Mirror	1
▲	5	49034	(000000-002099)	Mirror, Convex, 06.7 X 06.2	1
▲	6	39283	(000000-002099)	Screw, Hex, M10 X 1.5 X 25, 8.8	8
▲	7	1037358	(000000-002099)	Screw, Hex, M10 X 1.50 X 35, 9.8, Sems	3
▲	8	32492	(000000-002099)	Washer, Flat, 0.38, Std	17
▲	9	41430	(000000-002099)	Nut, Hex, Lock, M10 X 1.5, Nl	9
▲	10	1045101	(000000-002099)	Bracket, Sppt, Ohg	1

Fig. 9 - Overhead Guard Kit (002100-)

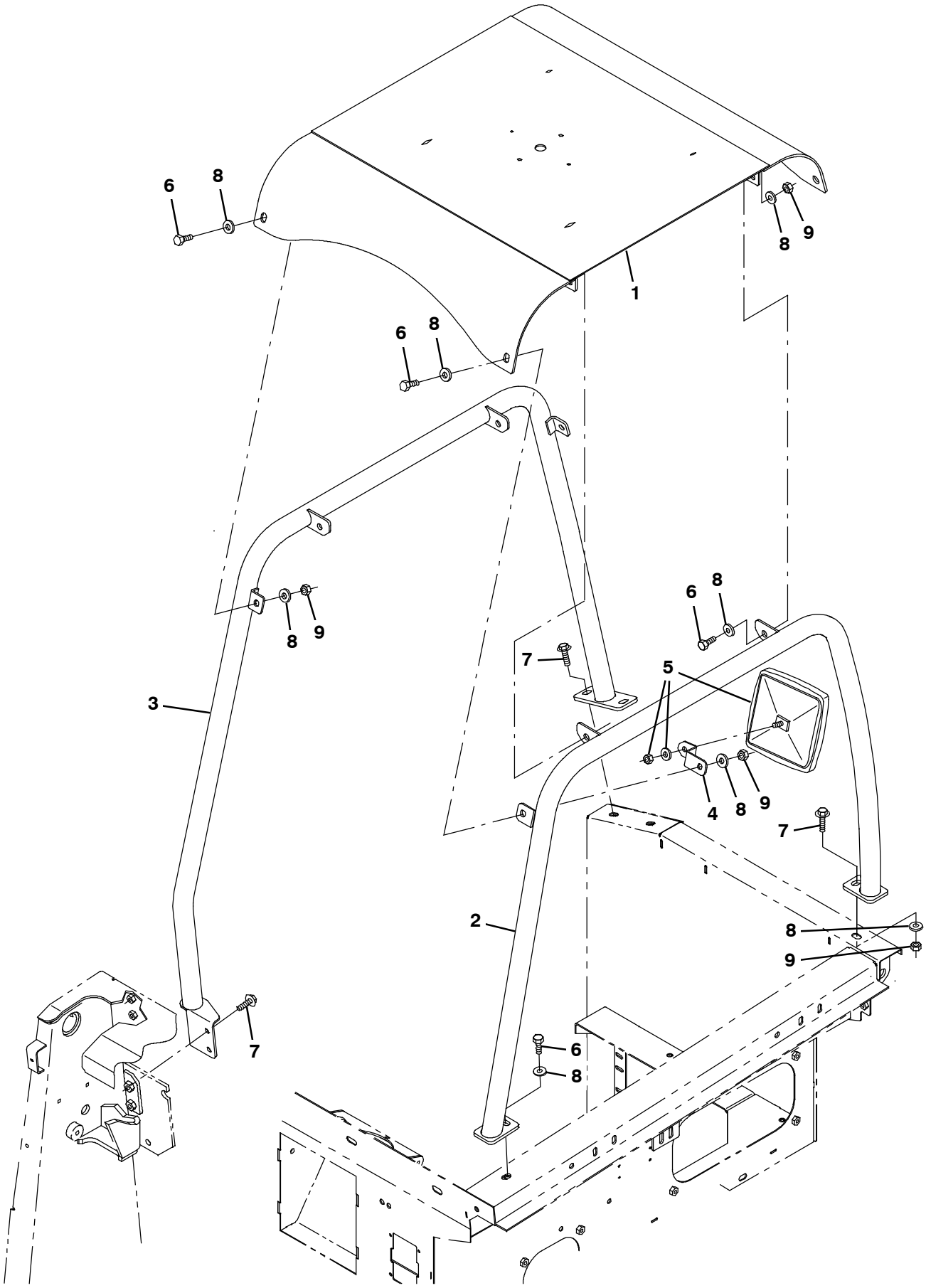

354736

Fig. 9 - Overhead Guard Kit (002100-)

	Ref.	Part No.	Serial Number	Description	Qty.
▽		9008200	(002100-)	Ohg Kit, Ci [S30]	1
▲	1	1032262	(002100-)	Guard Wldt, Ohg, Top	1
▲	2	1032067	(002100-)	Leg Wldt, Guard, Lh	1
▲	3	1061016	(002100-)	Leg Wldt, Guard, Rh	1
▲	4	1032722	(002100-)	Bracket, Mtg, Mirror	1
▲	5	49034	(002100-)	Mirror, Convex, 06.7 X 06.2	1
▲	6	39283	(002100-)	Screw, Hex, M10 X 1.5 X 25, 8.8	8
▲	7	1037358	(002100-)	Screw, Hex, M10 X 1.50 X 35, 9.8, Sems	5
▲	8	32492	(002100-)	Washer, Flat, 0.38, Std	17
▲	9	41430	(002100-)	Nut, Hex, Lock, M10 X 1.5, Nl	9

Fig. 10 - Cab Group

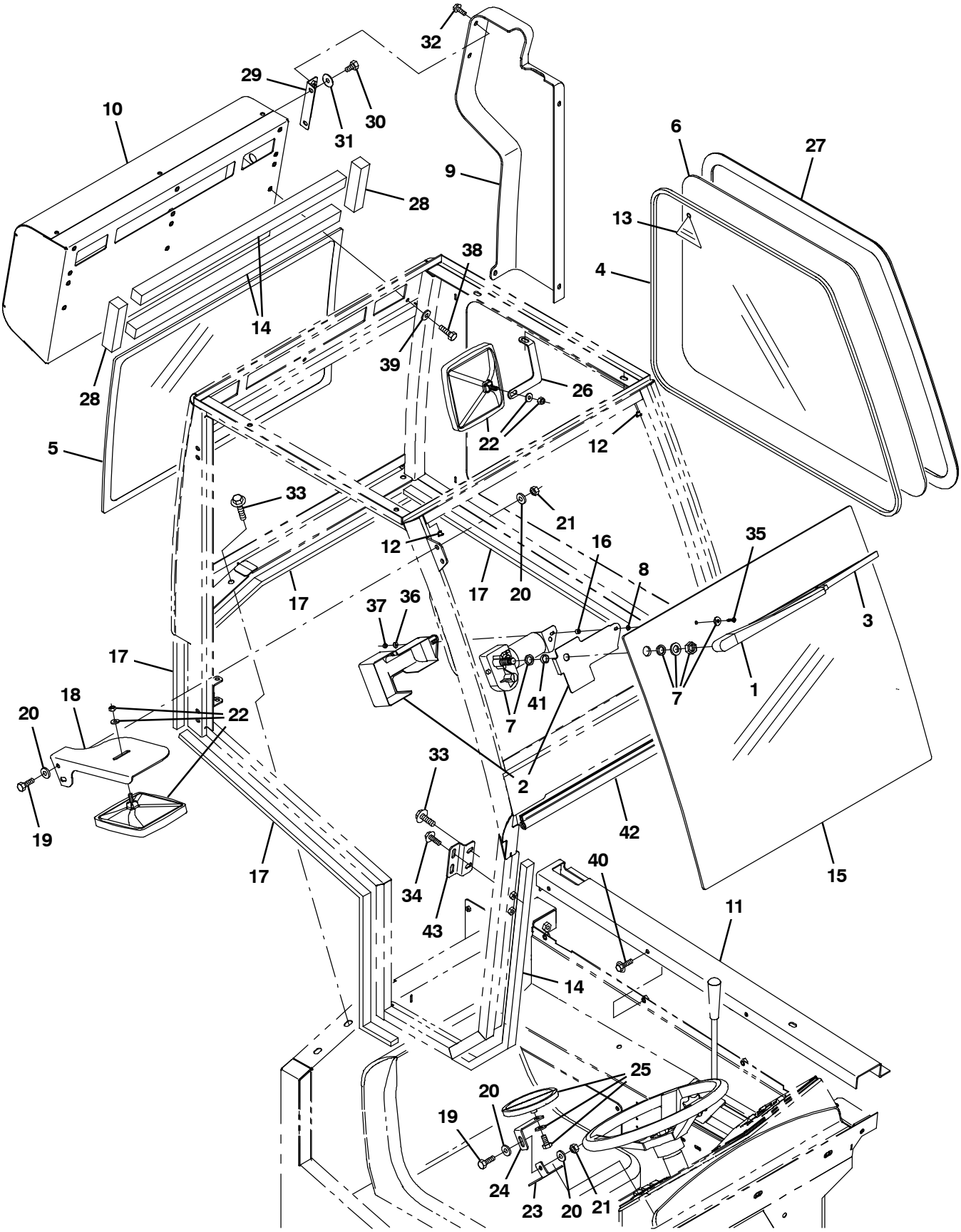

354755

Fig. 10 - Cab Group

Ref.	Part No.	Serial Number	Description	Qty.
1	1062083	(000000–)	Arm, Wiper, Windshield	1
2	1067891	(000000–)	Plate, Motor, Wiper, Cab	1
3	1062084	(000000–)	Blade, Wiper, Windshield	1
4	9009219	(000000–)	Seal, Afmkt, Rbr, Wndw, 10ft [Zipper]	1
5	1067875	(000000–)	Pane, Glass, Wndw, Rear	1
6	1067874	(000000–)	Pane, Glass, Wndw, Lh Side, Cab	1
7	1067872	(000000–)	Motor, Wiper, Cab	1
8	76426	(000000–)	Washer, Sealing, 0.28b 0.75d Ss, Neo	1
9	1067869	(000000–)	Cover, Hose, Plstc, Cab	1
10	1067918	(000000–)	Heater Unit, W/ A/C & Fan	1
11	1060586	(000000–)	Lip Wldt, Oprtr Station / Cab	1
12	80061	(000000–)	Plug, Hole, Rnd, 0.30h 0.3l	2
13	1067911	(000000–)	Label, Info [Exit]	1
14	1069688	(000000–)	Seal, Afmkt, Foam, 1.18 X 1.18, 03ft	2
15	1067878	(000000–)	Pane, Glass, Wndw, Front	1
16	1069211	(000000–)	Spacer, Plstc, 0.18b 0.27d 0.27l	1
17	1069681	(000000–)	Seal, Foam, .50, 1.00w 72.00l, Adh	1
18	1049061	(000000–)	Bracket, Mtg, Mirror	1
19	09740	(000000–)	Screw, Hex, M8 X 1.25 X 20, Ss	3
20	39349	(000000–)	Washer, Flat, 0.31, Sae	6
21	08713	(000000–)	Nut, Hex, Lock, M8 X 1.25, Nl, Ss	3
22	49034	(000000–)	Mirror, Convex, 06.7 X 06.2	2
23	1048740	(000000–)	Bracket, Mtg, Mirror, Lower	1
24	1049017	(000000–)	Bracket, Mtg, Mirror, Upper	1
25	1050295	(000000–)	Mirror, Convex, 0.50d	1
26	1048743	(000000–)	Bracket, Mtg, Mirror	1
27	9009218	(000000–)	Seal, Afmkt, Rbr, Wndw, 10ft	1
28	1069687	(000000–)	Seal, Afmkt, Foam, 1.18 X 1.18, 01ft	2
29	1066952	(000000–)	Bracket, Mtg, Cover	1
30	16735	(000000–)	Screw, Hex, M8 X 1.25 X 16, 8.8	2
31	1069326	(000000–)	Washer, Flat, 0.31, Sae, Blk	2
32	1040467	(000000–)	Screw, Hex, M6 X 1.00 X 20, 9.8, Sems	5
33	1037358	(000000–)	Screw, Hex, M10 X 1.50 X 35, 9.8, Sems	6
34	1037346	(000000–)	Screw, Hex, M8 X 1.25 X 25, 9.8, Sems	2
35	1069316	(000000–)	Screw, Pan, Phl, M4 X 0.70 X 20, Blk	1
36	1059252	(000000–)	Washer, Flat, 0.19b 0.50d .03, Stl, Blk	2
37	02850	(000000–)	Nut, Hex, Lock, M4 X 0.70, Nl	1
38	39277	(000000–)	Screw, Hex, M8 X 1.25 X 25, 8.8	6
39	32491	(000000–)	Washer, Flat, 0.31, Std	6
40	1037346	(000000–)	Screw, Hex, M8 X 1.25 X 25, 9.8, Sems	3
41	1069210	(000000–)	Spacer, Plstc, 0.62b 0.75d 0.27l	1
42	1031616	(000000–)	Seal, Afmkt, Bulb, Str, .75d F/07ga 03ft	1
43	1069232	(000000–)	Bracket, Mtg, Cab	1

Fig. 11 - Cab Cover Group

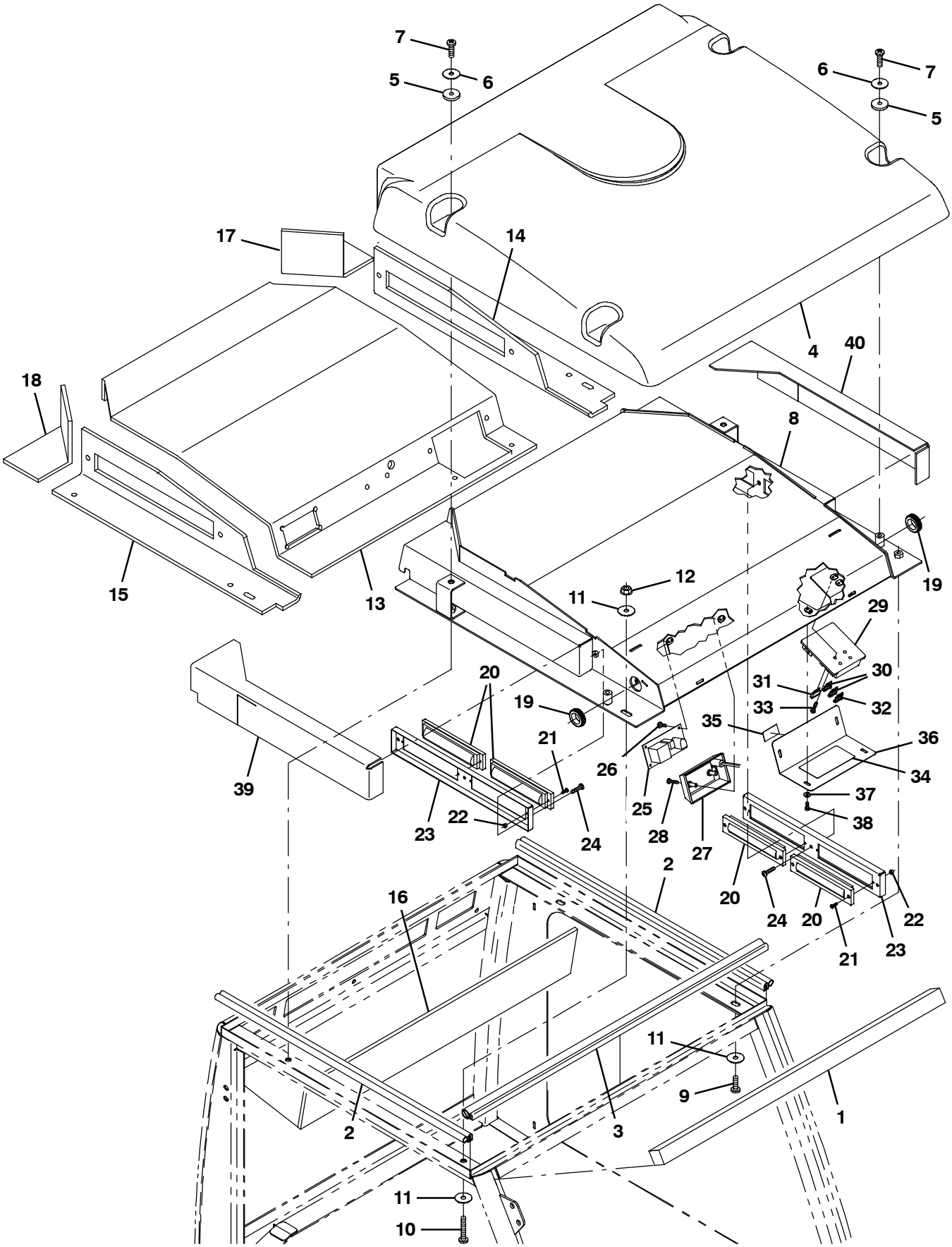

354754

Fig. 11 - Cab Cover Group

Ref.	Part No.	Serial Number	Description	Qty.
1	1069688	(000000–)	Seal, Afmkt, Foam, 1.18 X 1.18, 03ft	1
2	1031207	(000000–)	Seal, Afmkt, Bulb, 90, 0.50d, 03ft	2
3	1030592	(000000–)	Seal, Afmkt, Bulb, 90, 0.75d F/11ga 03ft	1
4	1067873	(000000–)	Panel, Roof, Plstc, Cab	1
5	1067887	(000000–)	Washer, Cab, Shld, Glass	4
6	1069326	(000000–)	Washer, Flat, 0.31, Sae, Blk	4
7	1069310	(000000–)	Screw, Pan, Phl, M8 X 1.25 X 25, Blk	4
8	1067217	(000000–)	Panel Wldt, Top, Cab	1
9	1069310	(000000–)	Screw, Pan, Phl, M8 X 1.25 X 25, Blk	2
10	1069201	(000000–)	Screw, Pan, Phl, M8 X 1.25 X 50, Blk	2
11	1060648	(000000–)	Washer, Flat, 0.31b 0.67d .07, Stl, Blk	5
12	07791	(000000–)	Nut, Hex, Flng, M8 X 1.25	1
13	1068687	(000000–)	Insulation, Sound, Liner, Top	1
14	1068690	(000000–)	Insulation, Sound, Liner, Lh	1
15	1068689	(000000–)	Insulation, Sound, Liner, Rh	1
16	1068688	(000000–)	Insulation, Sound, Liner	1
17	1069229	(000000–)	Insulation, Sound, Liner, Side, Lh	1
18	1069231	(000000–)	Insulation, Sound, Liner, Side, Rh	1
19	10632	(000000–)	Grommet, Rbr, 0.89id, F/1.2h, .14 Matl	2
20	1067909	(000000–)	Louver, Rt, Roll	4
21	1069314	(000000–)	Screw, Pan, Phl, M3 X 0.50 X 12, Blk	8
22	01754	(000000–)	Nut, Hex, Std, M3 X 0	8
23	1066933	(000000–)	Plate, Vent	2
24	1069318	(000000–)	Screw, Pan, Phl, M5 X 0.80 X 25, Blk	6
25	1068751	(000000–)	Controls, Ac/Heater [S30]	1
26	1069315	(000000–)	Screw, Pan, Phl, M4 X 0.70 X 10, Blk	4
27	1067886	(000000–)	Light, Dome, Cab	1
28	1069317	(000000–)	Screw, Pan, Phl, M4 X 0.70 X 25, Blk	1
29	1067870	(000000–)	Fuseholder, Cab	1
30	1016029	(000000–)	Fuse, Blade, 005a, 32vdc	2
31	611140	(000000–)	Fuse, Blade, 020a, 32vdc	1
32	1067917	(000000–)	Fuse, Blade, 002a, 32vdc	1
33	1069317	(000000–)	Screw, Pan, Phl, M4 X 0.70 X 25, Blk	4
34	1067910	(000000–)	Label [Fuse Block]	1
35	1069330	(000000–)	Label, Circuitbreaker [Fuse Box]	1
36	1066972	(000000–)	Cover, Fuse	1
37	1059252	(000000–)	Washer, Flat, 0.19b 0.50d .03, Stl, Blk	4
38	1069315	(000000–)	Screw, Pan, Phl, M4 X 0.70 X 10, Blk	4
39	1072046	(005700–)	Insulation, Heat, Liner, Rh	1
40	1072047	(005700–)	Insulation, Heat, Liner, Lh	1

Fig. 12 - Cab Door Group

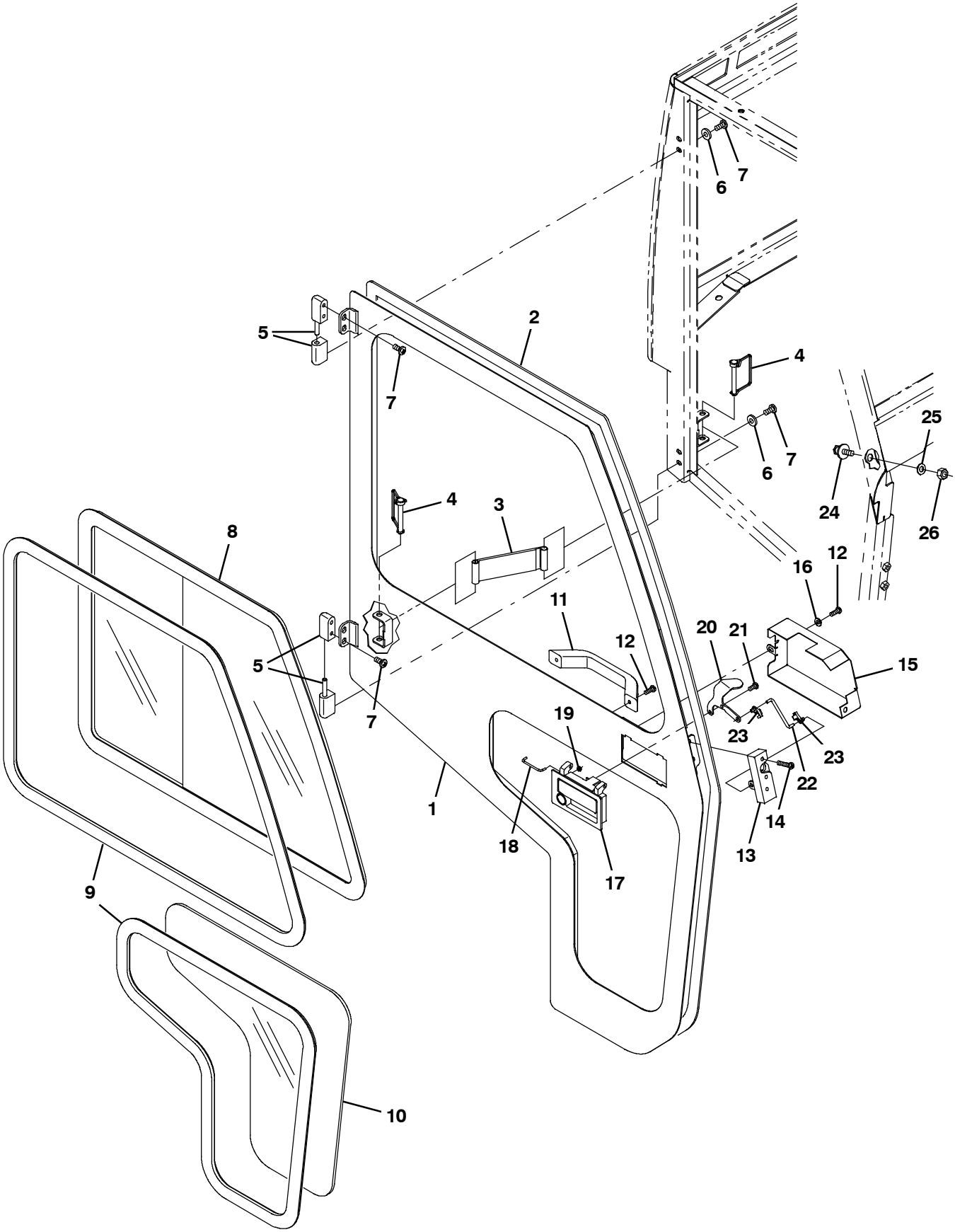

354753

Fig. 12 - Cab Door Group

	Ref.	Part No.	Serial Number	Description	Qty.
	1	1067216	(000000-)	Door Wldt, Rh	1
	2	1015261	(000000-)	Seal, Afmkt, Bulb, Str, 0.76, 0.93w 20ft	1
	3	1067895	(000000-)	Strap, Door, Cab	1
	4	1067881	(000000-)	Pin, Lock, Cab	2
	5	1067879	(000000-)	Hinge, Bracket, Door, Cab	2
	6	1069326	(000000-)	Washer, Flat, 0.31, Sae, Blk	4
	7	1069311	(000000-)	Screw, Pan, Phl, M8 X 1.25 X 16, Blk	8
	8	1067877	(000000-)	Pane, Wndw, Slide, Rh, Cab	1
	9	9009220	(000000-)	Seal, Afmkt, Rbr, Wndw, 08ft	2
	10	1067876	(000000-)	Pane, Wndw, Lower, Cab	1
	11	1067889	(000000-)	Handle, Door, Cab	1
	12	1069312	(000000-)	Screw, Pan, Phl, M6 X 1.0 X 16, Blk	4
	13	1067885	(000000-)	Latch, Cab	1
	14	1069313	(000000-)	Screw, Pan, Phl, M6 X 1.0 X 35, Blk	3
	15	1066980	(000000-)	Cover, Latch	1
	16	1069322	(000000-)	Washer, Flat, 0.25, Sae, Blk	2
▽	17	1067890	(000000-)	Handle, Locking, Cab	1
▲		1067919	(000000-)	Key, Latch, Door Assy	1
	18	1062944	(000000-)	Rod, Handle, Cab	1
	19	1067907	(000000-)	Retainer, Shaft, 0.12id .38od X .052	1
	20	1066957	(000000-)	Bracket, Handle, Latch	1
	21	74027	(000000-)	Screw, Pan, Phl, M6 X 1.00 X 12, Nl, Pl	2
	22	1062952	(000000-)	Rod, Latch, Cab	1
	23	1067880	(000000-)	Clip, Rod, Cab	2
	24	1067884	(000000-)	Stud, Strike, Cab	1
	25	32492	(000000-)	Washer, Flat, 0.38, Std	1
	26	25014	(000000-)	Nut, Hex, Std, .38-16	1

Fig. 13 - Cab Heater Group (000000-005699)

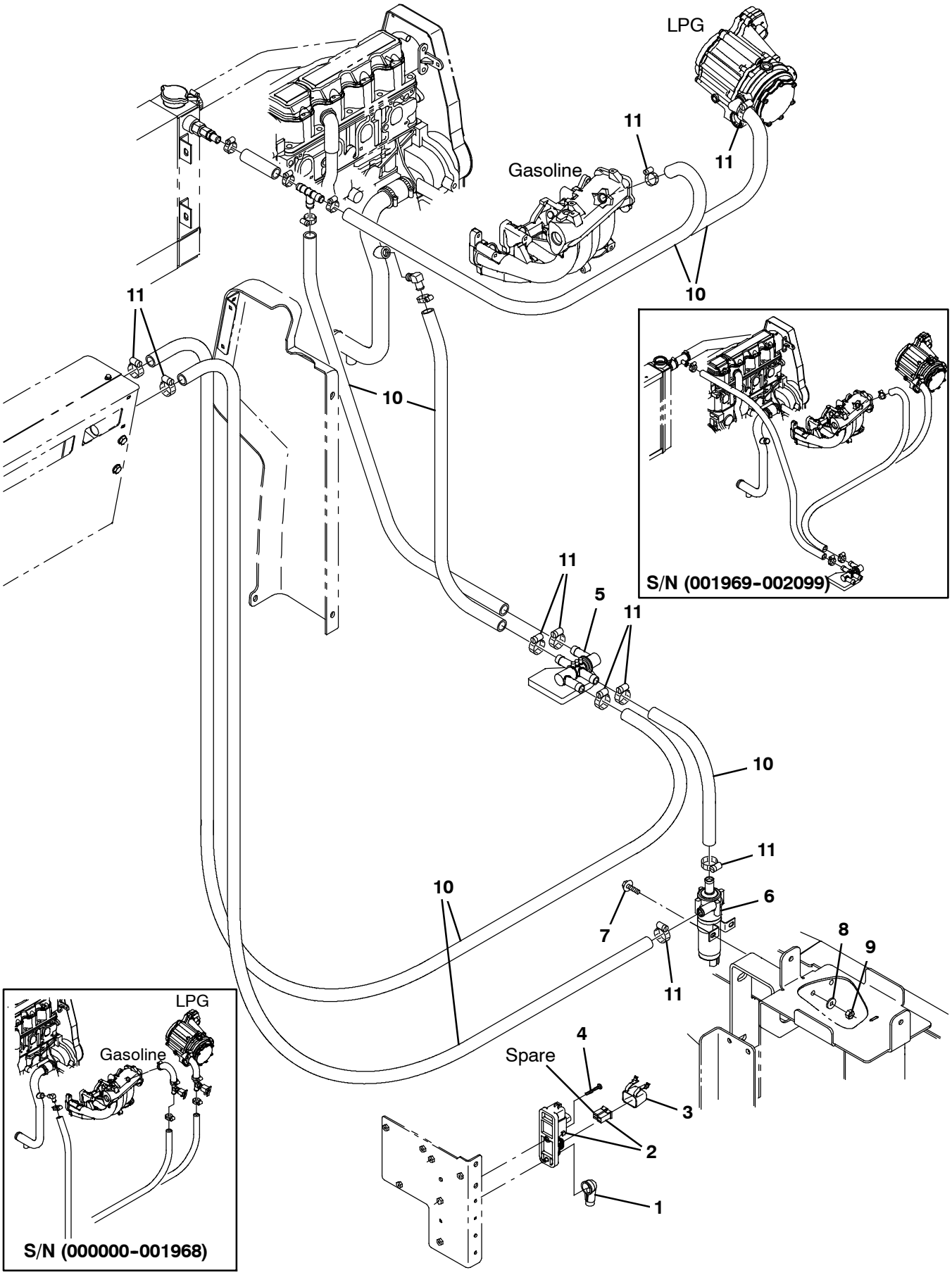

354759

Fig. 13 - Cab Heater Group (000000-005699)

	Ref.	Part No.	Serial Number	Description	Qty.
	1	1016314	(000000-005699)	Boot, 90deg .50id 1.00id 2.50l, Red	1
▽	2	1029105	(000000-005699)	Relay Assy, 12vdc [2f/1r]	1
▲	3	1036230	(000000-005699)	Fuse, 60a, 32vdc [Fem Maxi]	1
	4	06940	(000000-005699)	Screw, Pan, Phl, M5 X 0.80 X 50, 4.8	1
	5	1045063	(000000-005699)	Valve, Heater	1
	6	1044279	(000000-005699)	Pump Assy, Water, 12vdc	1
	7	222159	(000000-005699)	Screw, Hex, M6 X 1.00 X 25, Fmg	2
	8	32490	(000000-005699)	Washer, Flat, 0.25, Std	2
	9	08708	(000000-005699)	Nut, Hex, Lock, M6 X 1.00, Nl	2
	10	1016563	(000000-005699)	Hose, Afmkt, Rbr, Heater, 0.62id, 20ft	1
	11	63810	(000000-005699)	Clamp, Hose, Wormdrive, 0.56-1.06d, .56w	8

Fig. 14 - Cab Heater Group (005700-)

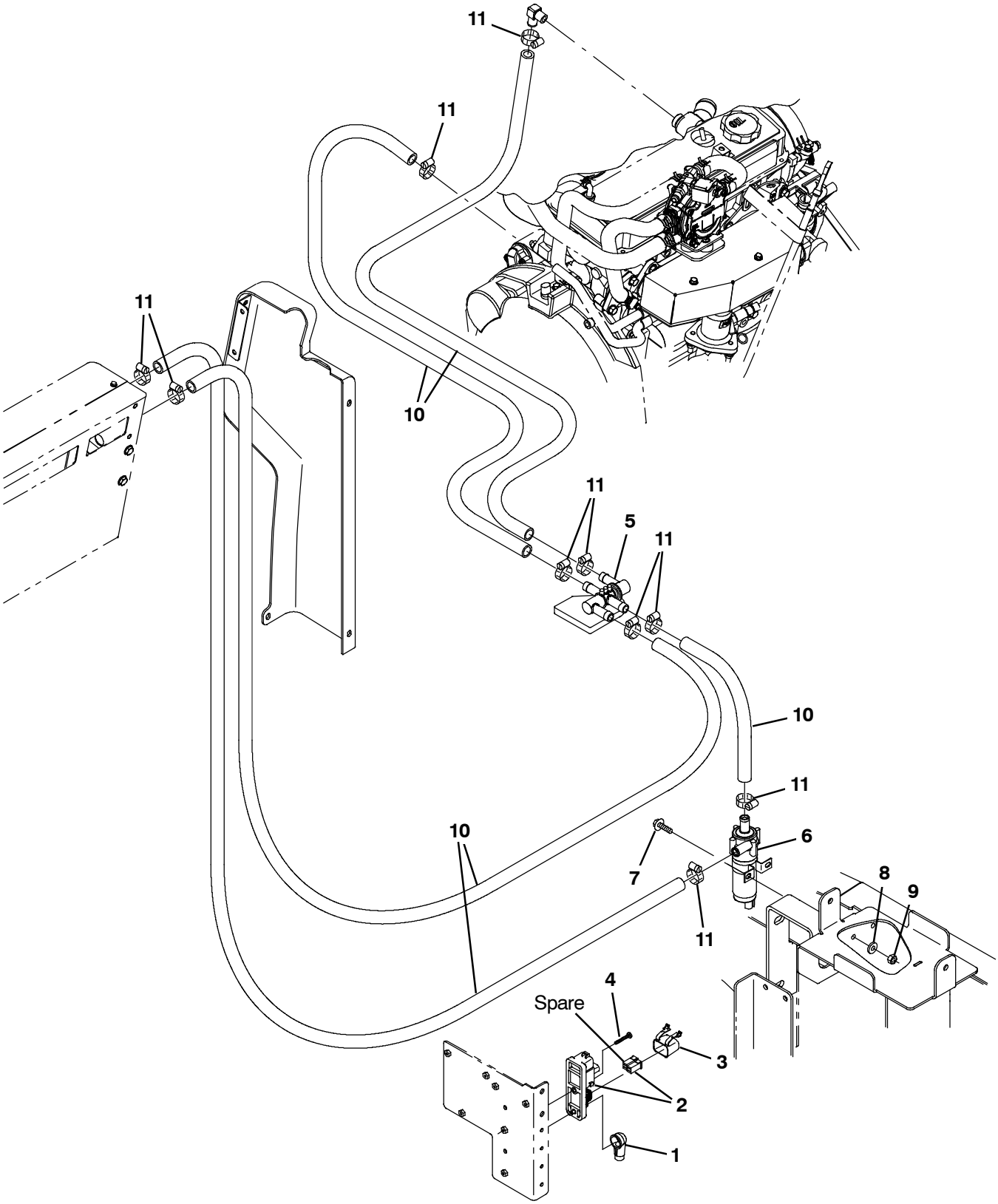

354759

Fig. 14 - Cab Heater Group (005700-)

	Ref.	Part No.	Serial Number	Description	Qty.
	1	1016314	(005700-)	Boot, 90deg .50id 1.00id 2.50l, Red	1
▽	2	1029105	(005700-)	Relay Assy, 12vdc [2f/1r]	1
▲	3	1036230	(005700-)	Fuse, 60a, 32vdc [Fem Maxi]	1
	4	06940	(005700-)	Screw, Pan, Phl, M5 X 0.80 X 50, 4.8	1
	5	1045063	(005700-)	Valve, Heater	1
	6	1044279	(005700-)	Pump Assy, Water, 12vdc	1
	7	222159	(005700-)	Screw, Hex, M6 X 1.00 X 25, Fmg	2
	8	32490	(005700-)	Washer, Flat, 0.25, Std	2
	9	08708	(005700-)	Nut, Hex, Lock, M6 X 1.00, Nl	2
	10	1016563	(005700-)	Hose, Afmkt, Rbr, Heater, 0.62id, 20ft	1
	11	63810	(005700-)	Clamp, Hose, Wormdrive, 0.56-1.06d, .56w	8

Fig. 15 - Cab Air Conditioner Group (000000-005699)

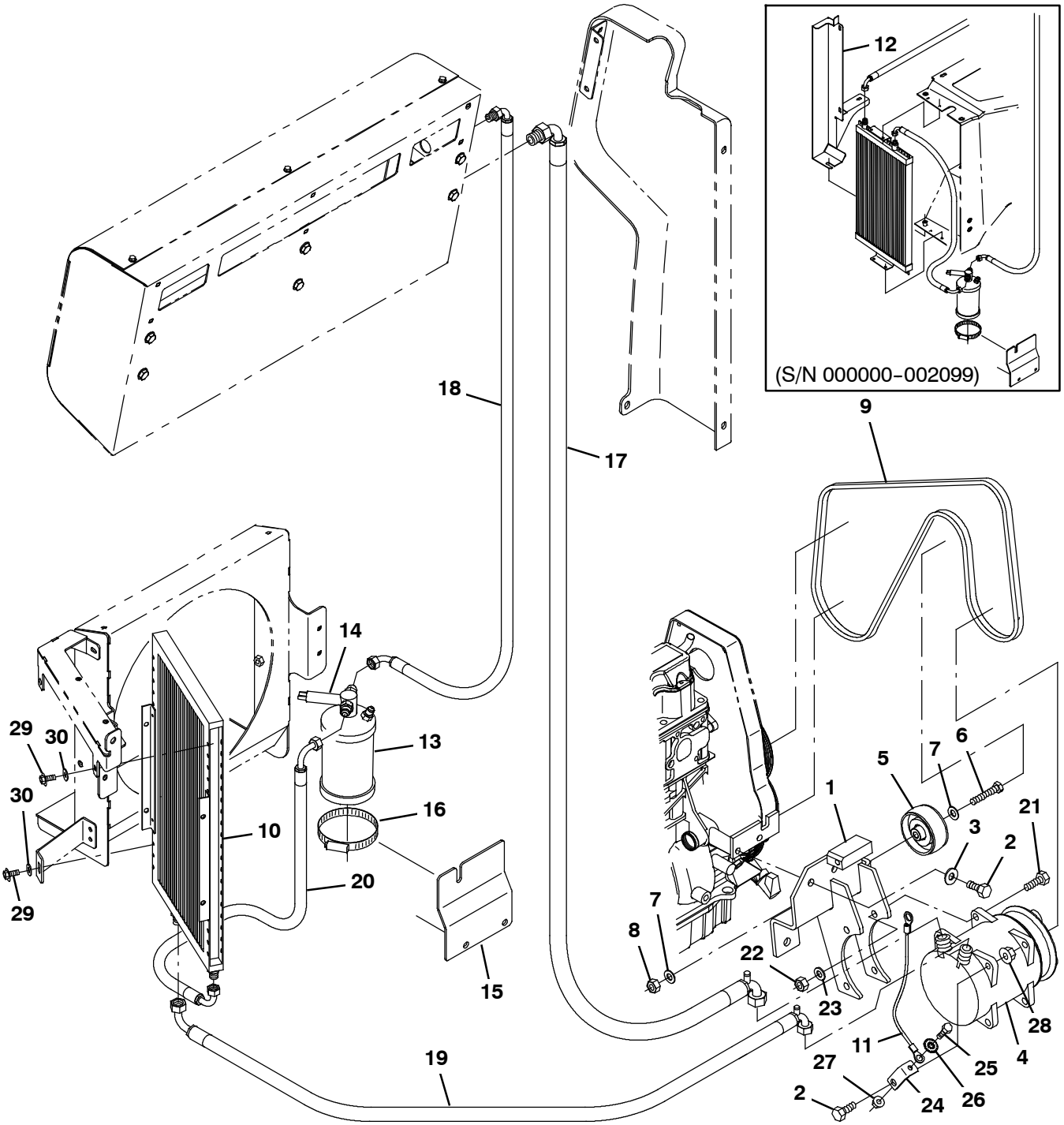

354760

Fig. 15 - Cab Air Conditioner Group (000000-005699)

Ref.	Part No.	Serial Number	Description	Qty.
1	1045112	(000000-005699)	Bracket Wldt, Mtg, Compressor	1
2	39283	(000000-005699)	Screw, Hex, M10 X 1.50 X 25, 8.8	4
3	32492	(000000-005699)	Washer, Flat, 0.38, Std	3
4	1045009	(000000-005699)	Compressor, A/C, 6v Pully [134, Tm-08hd]	1
5	1030782	(000000-005699)	Pulley, Idler, Tens, Belt	1
6	27990	(000000-005699)	Screw, Hex, .38-16 X 2.00, G5	1
7	32485	(000000-005699)	Washer, Flat, 0.38, Sae	2
8	50902	(000000-005699)	Nut, Hex, Lock, .38-16, Nl	1
9	1042954	(000000-005699)	Belt, Ribbed, 55.1l	1
10	1041870	(000000-005699)	Condenser, Ac	1
11	31525	(000000-005699)	Wire, 10ga 16.0l Blk .25ring /.38ring	1
12	1043045	(000000-002099)	Plate, Filler, A/C	1
13	1045033	(000000-005699)	Dryer, A/C	1
14	1045203	(000000-005699)	Switch, A/C [Binary]	1
15	1045681	(000000-005699)	Bracket, Sppt	1
16	43555	(000000-005699)	Clamp, Hose, Wormdrive, 2.50-3.50d, .50w	1
17	1045151	(000000-005699)	Hose, A/C, 10, E90/E90, 060.0l [R134]	1
18	1045153	(000000-005699)	Hose, A/C, 06, E90/E90, 052.0l [R134]	1
19	1045155	(000000-005699)	Hose, A/C, 08, E90/E90, 052.0l [R134]	1
20	1045156	(000000-005699)	Hose, A/C, 06, E90/E90, 043.0l [R134]	1
21	39284	(000000-005699)	Screw, Hex, M10 X 1.25 X 35, 8.8	4
22	41430	(000000-005699)	Nut, Hex, Lock, M10 X 1.5, Nl	4
23	41187	(000000-005699)	Washer, Flat, Belleville, .38	4
24	1047225	(000000-005699)	Angle, Mtg, Ground	1
25	87308	(000000-005699)	Screw, Hex, M6 X 1.00 X 12, 8.8	1
26	41140	(000000-005699)	Washer, Lock, Int-ext, 0.25	1
27	07790	(000000-005699)	Nut, Hex, Flng, M6 X 1.00	1
28	07792	(000000-005699)	Nut, Hex, Flng, M10 X 1.50	1
29	55845	(002100-005699)	Screw, Hex, M5 X 0.80 X 16, Fmg	3
30	19066	(002100-005699)	Washer, Flat, 10	3

Fig. 16 - Cab Air Conditioner Group (005700-)

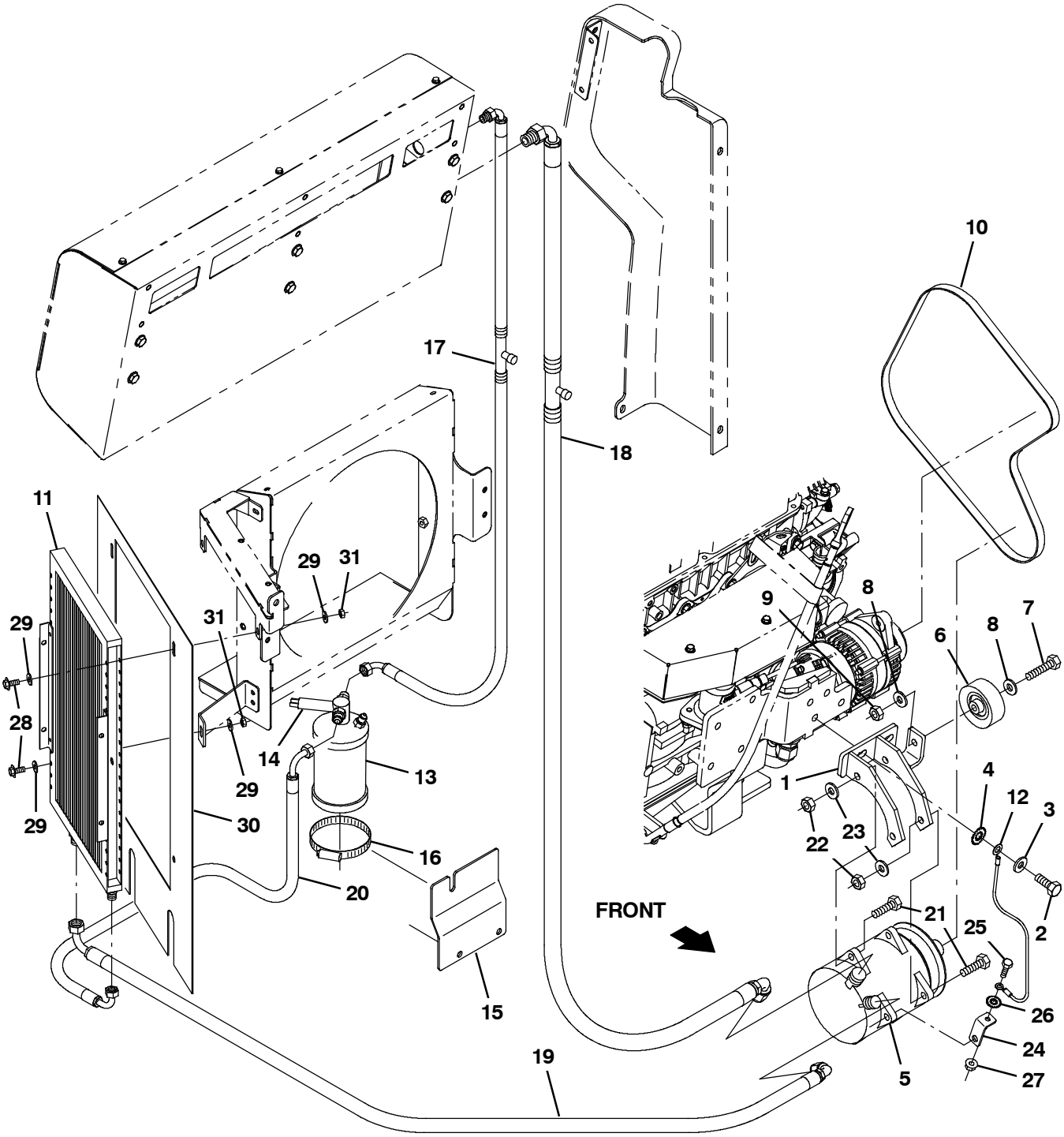

354760

Fig. 16 - Cab Air Conditioner Group (005700-)

Ref.	Part No.	Serial Number	Description	Qty.
1	1071141	(005700-)	Bracket Wldt, Mtg, Compressor	1
2	39283	(005700-)	Screw, Hex, M10 X 1.50 X 25, 8.8	4
3	32492	(005700-)	Washer, Flat, 0.38, Std	3
4	41141	(005700-)	Washer, Lock, Int-Ext, 0.31	1
5	1045009	(005700-)	Compressor, A/C, 6v Pully [134, Tm-08hd]	1
6	1030782	(005700-)	Pulley, Idler, Tens, Belt	1
7	27990	(005700-)	Screw, Hex, .38-16 X 2.00, G5	1
8	32485	(005700-)	Washer, Flat, 0.38, Sae	2
9	50902	(005700-)	Nut, Hex, Lock, .38-16, Nl	1
10	1071681	(005700-)	Belt, Ribbed, Alternator, A/C, 51.125l	1
11	1041870	(005700-)	Condenser, Ac	1
12	31525	(005700-)	Wire, 10ga 16.0l Blk .25ring /.38ring	1
13	1045033	(005700-)	Dryer, A/C	1
14	1045203	(005700-)	Switch, A/C [Binary]	1
15	1045681	(005700-)	Bracket, Sppt	1
16	43555	(005700-)	Clamp, Hose, Wormdrive, 2.50-3.50d, .50w	1
17	1071865	(005700-)	Hose, A/C, 10, E90/E90, 060.0l [R134]	1
18	1071864	(005700-)	Hose, A/C, 06, E45/E90, 052.0l [R134]	1
19	1071883	(005700-)	Hose, A/C, 08, E90/E90, 052.0l [R134]	1
20	1045156	(005700-)	Hose, A/C, 06, E90/E90, 043.0l [R134]	1
21	39284	(005700-)	Screw, Hex, M10 X 1.25 X 35, 8.8	4
22	41430	(005700-)	Nut, Hex, Lock, M10 X 1.5, Nl	4
23	41187	(005700-)	Washer, Flat, Belleville, .38	4
24	1047225	(005700-)	Angle, Mtg, Ground	1
25	87308	(005700-)	Screw, Hex, M6 X 1.00 X 12, 8.8	1
26	41140	(005700-)	Washer, Lock, Int-ext, 0.25	1
27	07790	(005700-)	Nut, Hex, Flng, M6 X 1.00	1
28	55845	(005700-)	Screw, Hex, M5 X 0.80 X 16, Fmg	4
29	19066	(005700-)	Washer, Flat, 10	8
30	1072054	(005700-)	Skirt, A/C	1
31	08708	(005700-)	Nut, Hex, Lock, M6 X 1.00, Nl	4

Fig. 17 - Cab Fuel Cover Group (002100-)

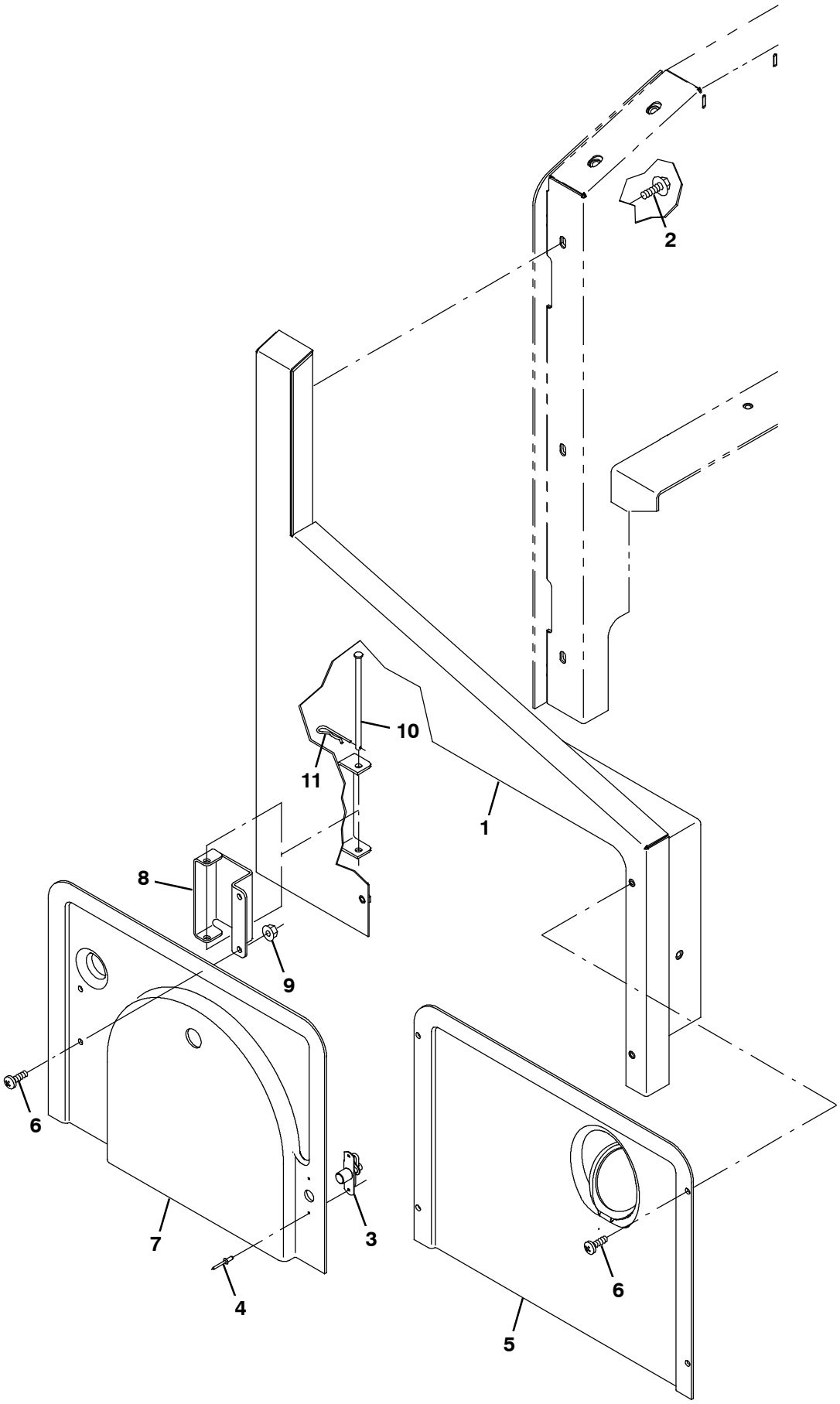

356055

Fig. 17 - Cab Fuel Cover Group (002100-)

Ref.	Part No.	Serial Number	Description	Qty.
1	1036608	(002100-)	Panel Wldt, Side	1
2	1037346	(002100-)	Screw, Hex, M8 X 1.25 X 25, 9.8, Sems	3
3	140962	(002100-)	Latch, Cmpr, Spring, Knurled Knob, Pl	1
4	87316	(002100-)	Rivet, Blind, .125d X 0.32 X .25d, Alm	2
5	9004524	(002100-)	Cover, Gas, W/ Label, Replmt	1
6	1045525	(002100-)	Screw, Pan, Phl, M6 X 1.00 X 12, Blk	6
7	1040281	(002100-)	Cover, Lpg	1
8	1042073	(002100-)	Hinge	1
9	08708	(002100-)	Nut, Hex, Lock, M6 X 1.00, Nl	1
10	1048950	(002100-)	Pin, Clevis, 0.25d X 5.25l	1
11	08085	(002100-)	Pin, Cotter, Hair, 0.31d .058 Wir	1

Fig. 18 - Cab Wire Harness Group

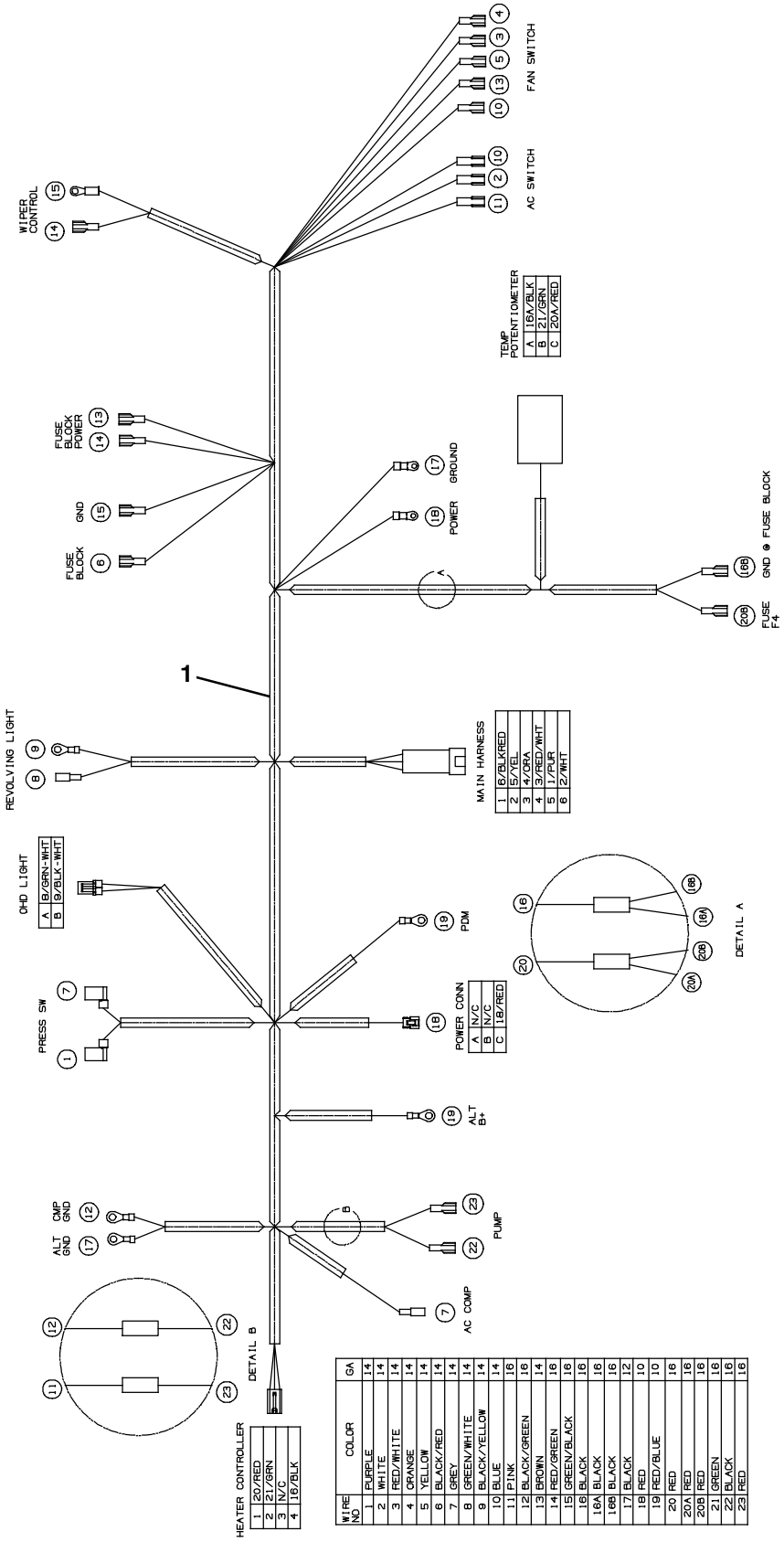

354761

Ref.	Part No.	Serial Number	Description	Qty.
1	1067912	(000000-)	Harness, Wire, Cab	1

Fig. 19 - Cab Wire Harness Electrical Schematic

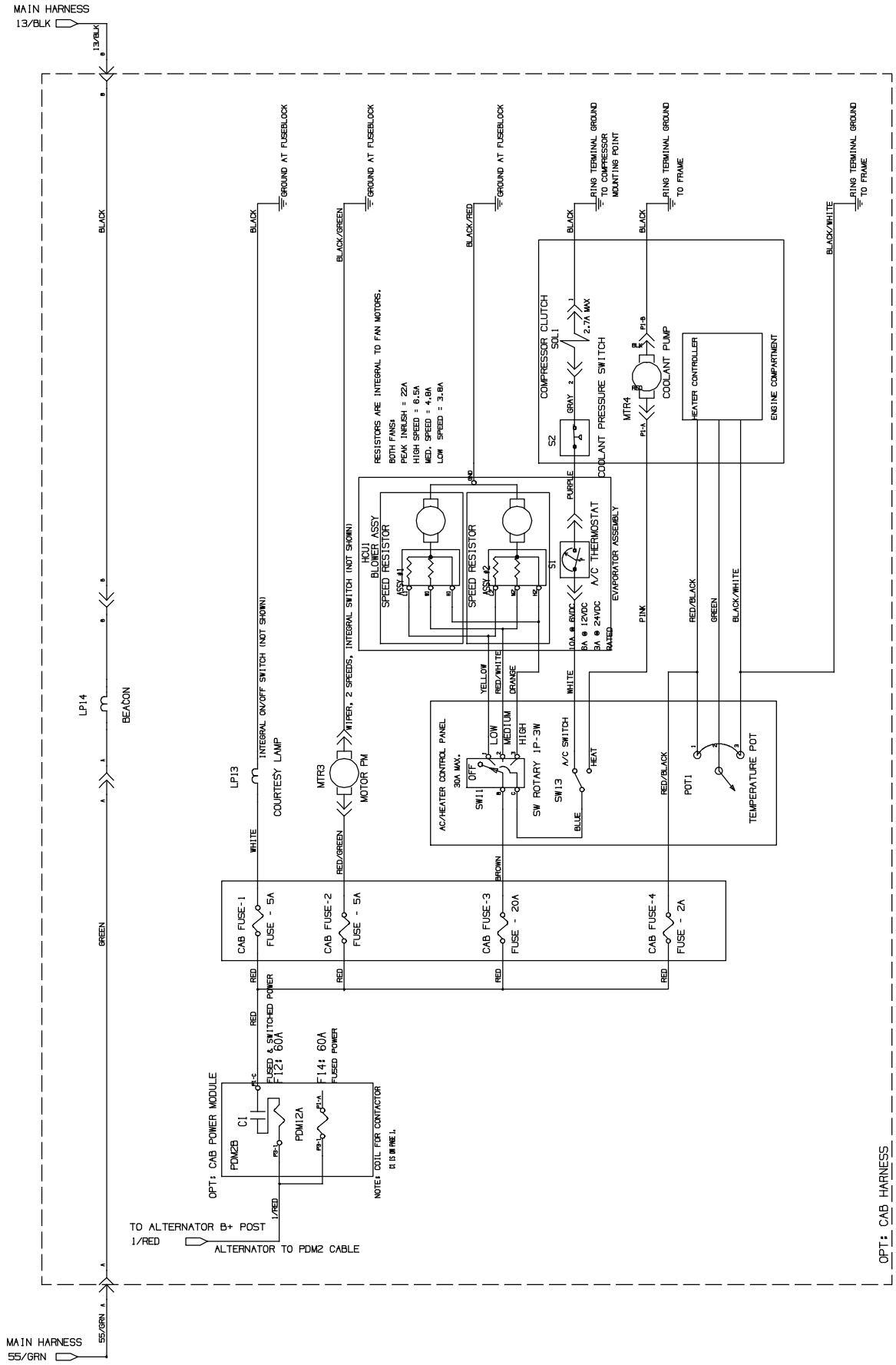

1029278- 354728

Fig. 20 - Corner Bumper Kit (000000-002099)

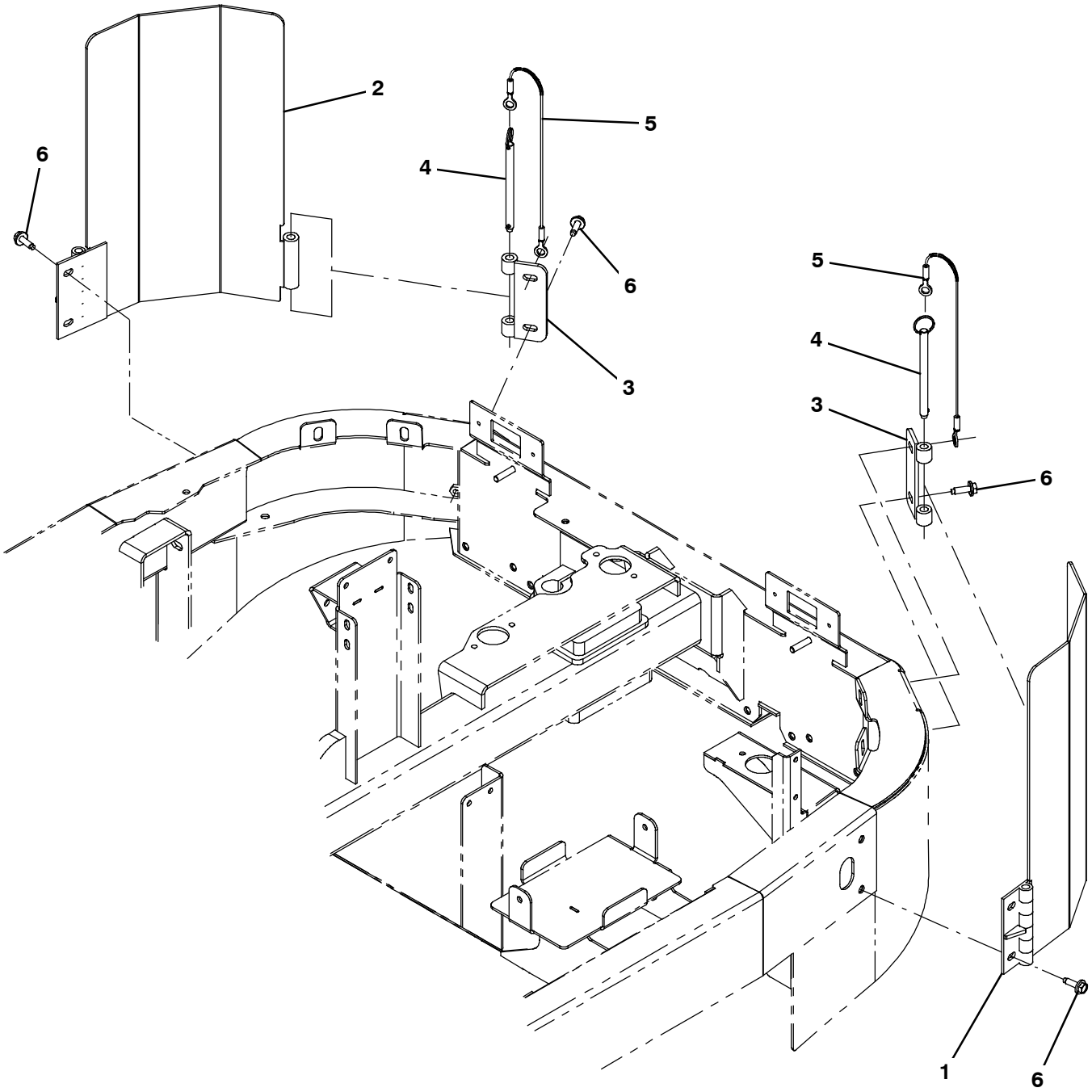

354746

	Ref.	Part No.	Serial Number	Description	Qty.
▽		9004107	(000000-002099)	Bumper Kit, Corner, Ci, [S30]	1
▲	1	1042888	(000000-002099)	Angle Wldt, Bmpr, Tower, Lh	1
▲	2	1042885	(000000-002099)	Angle Wldt, Bmpr, Tower, Rh	1
▲	3	1043183	(000000-002099)	Bracket Wldt, Mtg, Bmpr	2
▲	4	1043176	(000000-002099)	Pin, Hitch, .500d X 6.00l, Pl	2
▲	5	87172	(000000-002099)	Cable, Glv .13d 010.0l .52eye /.52eye	2
▲	6	1037358	(000000-002099)	Screw, Hex, M10 X 1.5 X 35, 9.8, Sems	8

Fig. 21 - Corner Bumper Kit (002100-)

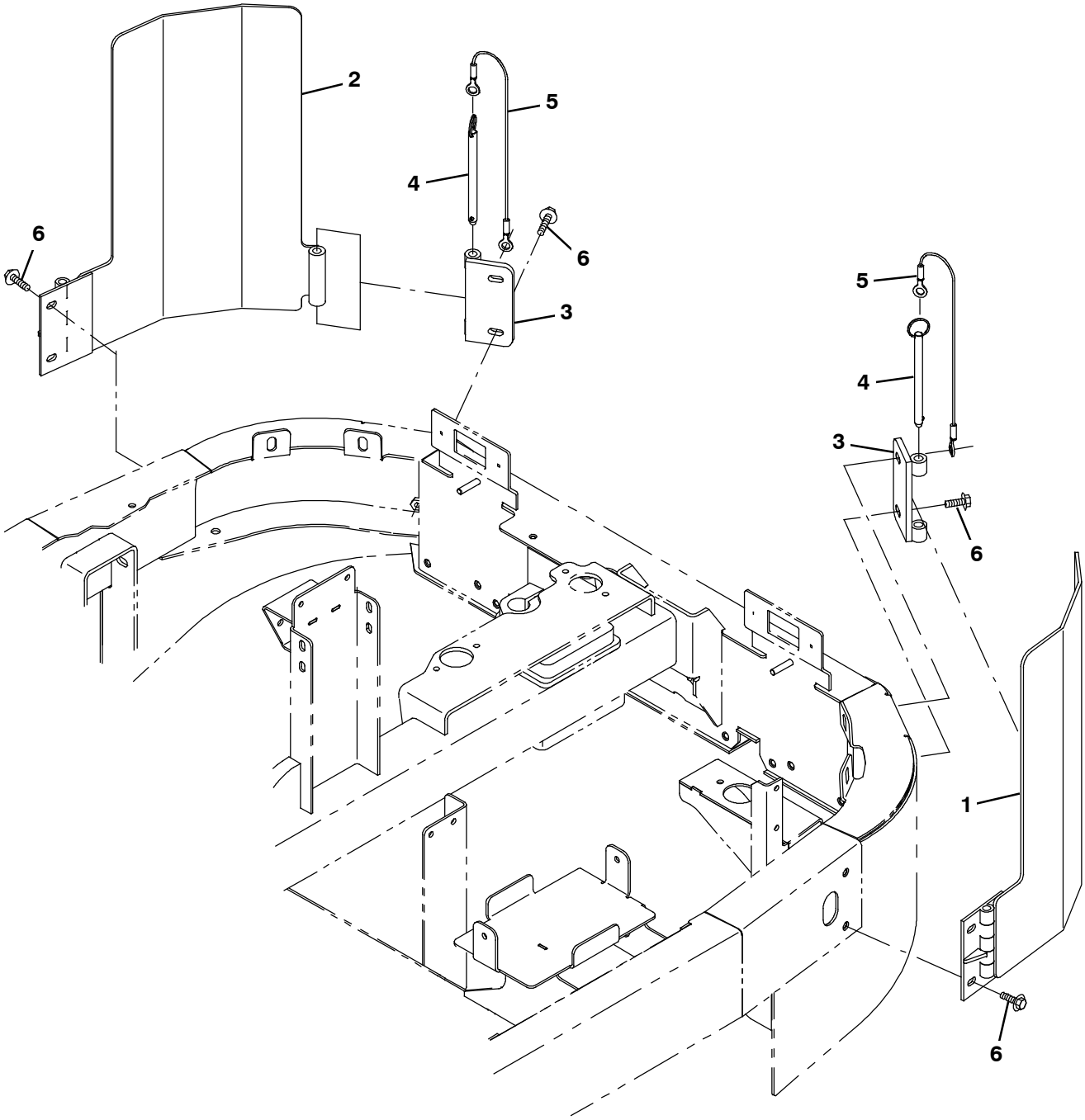

	Ref.	Part No.	Serial Number	Description	Qty.
▽		9008195	(002100-)	Bumper Kit, Corner, Ci, [S30]	1
▲	1	1060546	(002100-)	Angle Wldt, Bmpr, Tower, Lh	1
▲	2	1061162	(002100-)	Angle Wldt, Bmpr, Tower, Rh	1
▲	3	1061629	(002100-)	Bracket Wldt, Mtg, Bmpr	2
▲	4	1043176	(002100-)	Pin, Hitch, .500d X 6.00l, Pl	2
▲	5	87172	(002100-)	Cable, Glv .13d 010.0l .52eye /.52eye	2
▲	6	1037358	(002100-)	Screw, Hex, M10 X 1.5 X 35, 9.8, Sems	8

Fig. 22 - Telemetry Group

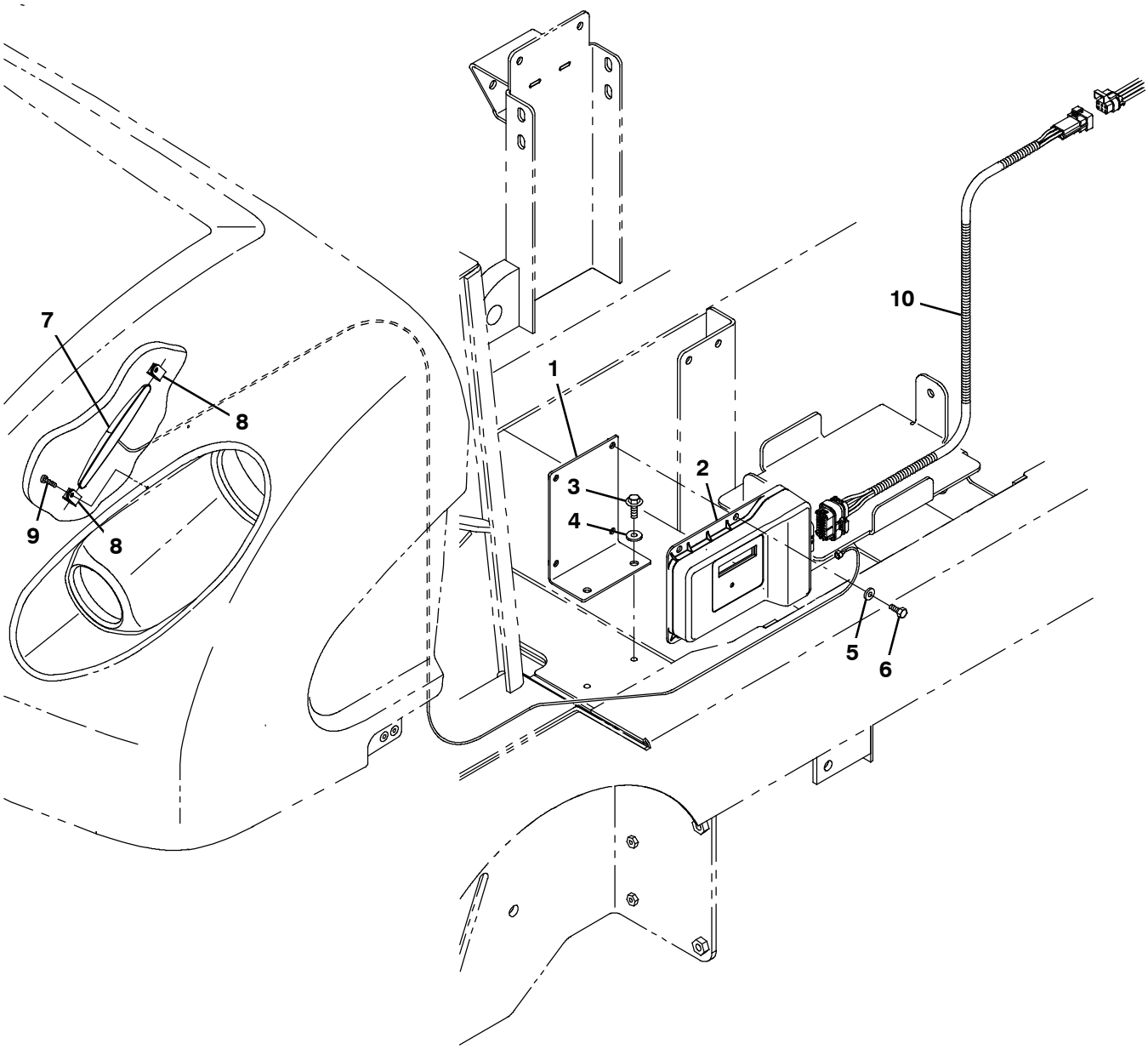

356285

Ref.	Part No.	Serial Number	Description	Qty.
1	1070124	(000000-)	Bracket, Mtg, Telem [S30]	1
2	9010085	(000000-)	Control Box Assy Kit, Replmt, Telem[Usa]	1
2	9010086	(000000-)	Control Box Assy Kit, Replmt, Telem[Can]	1
3	763045	(000000-)	Screw, Hex, M8 X 1.25 X 20, Fmg	2
4	32492	(000000-)	Washer, Flat, 0.38, Std	2
5	19066	(000000-)	Washer, Flat, 0.25b 0.56d .05, Pl, 10	4
6	09244	(000000-)	Screw, Hex, M5 X 0.80 X 16, 8.8	4
7	1070324	(000000-)	Antenna, Telem, 110 In [Gprs]	1
8	140916	(000000-)	Clamp, Cable, Nyl, 0.62d, Nat	2
9	360973	(000000-)	Screw, Pan, 12-16 X 0.50, F/ Plstc	2
10	1071132	(000000-)	Harness, Ele [Extn, Telemetry]	1
	1069580	(000000-)	Label, Opertnl, Telem [Fcc/Ic]	1

Fig. 23 - Fire Extinguisher Kit

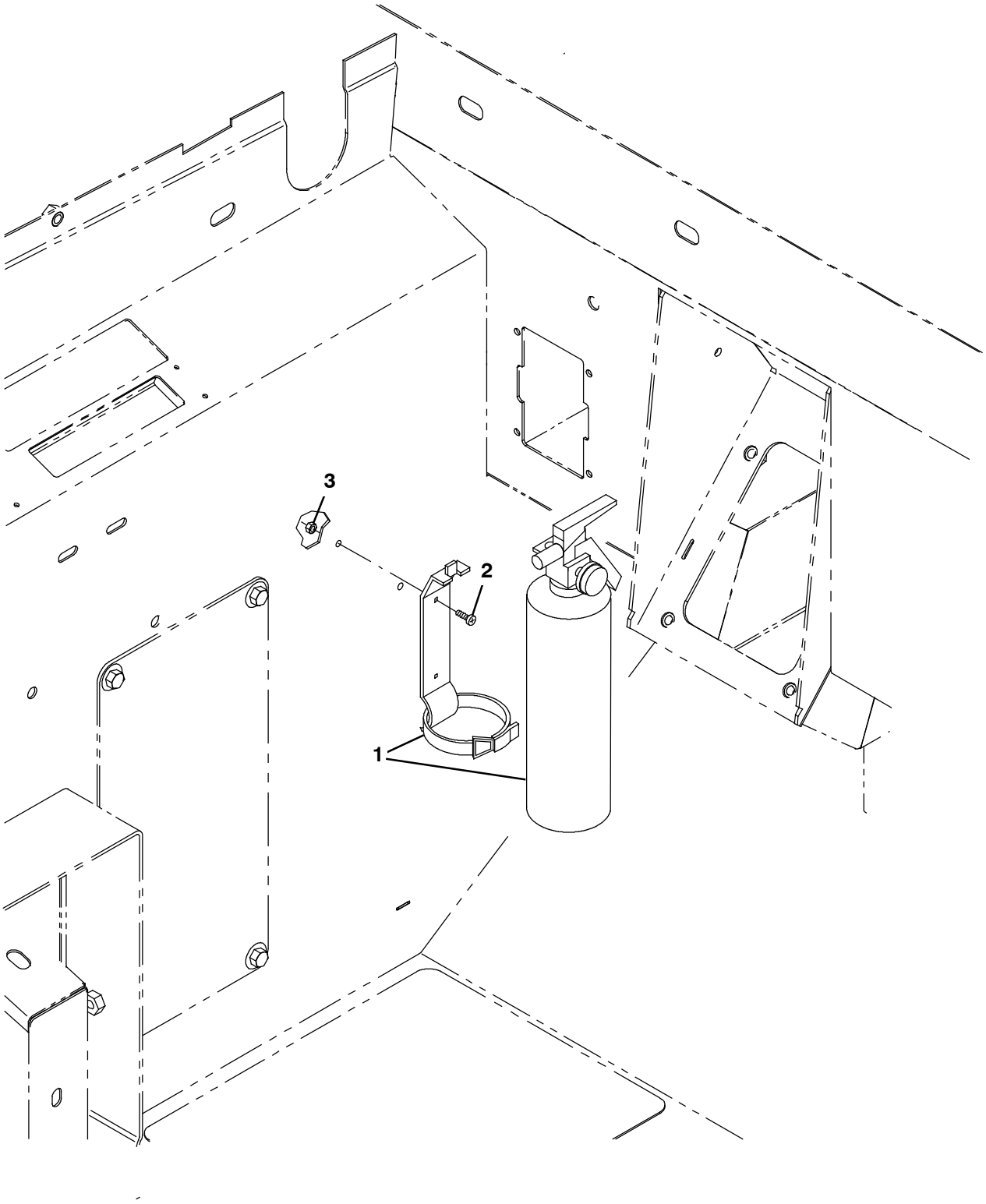

354747

	Ref.	Part No.	Serial Number	Description	Qty.
▽		9003933	(000000-)	Extinguisher Kit, Fire, Ci [S30]	1
▲	1	25312	(000000-)	Extinguisher, Fire, 2.5 Lb Dry	1
▲	2	06933	(000000-)	Screw, Pan, M5 X 0.80 X 16, 4.8	2
▲	3	06549	(000000-)	Nut, Hex, Lock, M5 X 0.80, Nl	2

Fig. 24 - Documentation Group

Ref.	Part No.	Serial Number	Description	Qty.
	9004080	(000000-)	Manual, Oprtr [S30, Gas/Lpg EN Na]	1
	9004081	(000000-)	Manual, Oprtr [S30, Gas/Lpg ES Na]	1
	9004082	(000000-)	Manual, Oprtr [S30, Gas/Lpg FR Na]	1
	9004083	(000000-)	Manual, Oprtr [S30, Gas/Lpg JP]	1
	9004085	(000000-)	Manual, Parts [S30, Gas/Lpg En]	1
	9004100	(000000-002099)	Media, DVD, Oprtr, [S30 EN ES FR]	1
	9008178	(002100-)	Video, Oprtr, Dvd [S30 En Es Fr]	1
	9004086	(000000-)	Manual, Service [S30 EN]	1
	372863	(000000-)	Manual, Service, Eng[Gm1.6l Em Cert]	1
	371790	(000000-)	Manual, Service, Eng [Gm1.6l]	1
	9004621	(000000-)	Manual. Oprtr [S30 Gas/Lpg, Cz, Ce]	1
	9004622	(000000-)	Manual, Oprtr [S30 Gas/Lpg, De, Ce]	1
	9004623	(000000-)	Manual, Oprtr [S30 Gas/Lpg, Dk, Ce]	1
	9004624	(000000-)	Manual, Oprtr [S30 Gas/Lpg, En, Ce]	1
	9004625	(000000-)	Manual, Oprtr [S30 Gas/Lpg, Es, Ce]	1
	9004626	(000000-)	Manual, Oprtr [S30 Gas/Lpg, Fi, Ce]	1
	9004627	(000000-)	Manual, Oprtr [S30 Gas/Lpg, Fr, Ce]	1
	9004628	(000000-)	Manual, Oprtr [S30 Gas/Lpg, Gr, Ce]	1
	9004629	(000000-)	Manual, Oprtr [S30 Gas/Lpg, Hu, Ce]	1
	9004630	(000000-)	Manual, Oprtr [S30 Gas/Lpg, It, Ce]	1
	9004631	(000000-)	Manual, Oprtr [S30 Gas/Lpg, Nl, Ce]	1
	9004632	(000000-)	Manual, Oprtr [S30 Gas/Lpg, No, Ce]	1
	9004633	(000000-)	Manual, Oprtr [S30 Gas/Lpg, Pl, Ce]	1
	9004634	(000000-)	Manual, Oprtr [S30 Gas/Lpg, Pt, Ce]	1
	9004635	(000000-)	Manual, Oprtr [S30 Gas/Lpg, Ru, Ce]	1
	9004636	(000000-)	Manual, Oprtr [S30 Gas/Lpg, Se, Ce]	1
	9004637	(000000-)	Manual, Oprtr [S30 Gas/Lpg, Tr, Ce]	1
	9004638	(000000-)	Manual, Oprtr [S30 Gas/Lpg, Ee, Ce]	1
	9004639	(000000-)	Manual, Oprtr [S30 Gas/Lpg, Lv, Ce]	1
	9004640	(000000-)	Manual, Oprtr [S30 Gas/Lpg, Lt, Ce]	1
	9004641	(000000-)	Manual, Oprtr [S30 Gas/Lpg, Sk, Ce]	1
	9004642	(000000-)	Manual, Oprtr [S30 Gas/Lpg, Si, Ce]	1
	9004729	(000000-)	Manual, Oprtr [S30 Gas/Lpg, Bg, Ce]	1
	9004730	(000000-)	Manual, Oprtr [S30 Gas/Lpg, Ro, Ce]	1
	1045947	(000000-002099)	Instr, Maint, Wall Chart[S30-Online]	1
	1068947	(002100-)	Instr, Maint, Wall Chart [Rotomold S30] (ONLINE ONLY)	1

To view, print, order, download the latest Parts manual, other language Operator manuals, and Use and Care Guides (wall charts) visit:

www.tennantco.com/manual

SECTION 4

Contents **Page**

Fig. 1 – Hydraulic Motor Breakdown, 379608 4–2
Fig. 2 – Hydraulic Motor Breakdown, 379607 4–3
Fig. 3 – Hydraulic Steering Valve Breakdown, 1024260 4–4
Fig. 4 – Hydraulic Valve Breakdown, 1040091 4–6
Fig. 5 – Hydraulic Valve Breakdown, 1034671 4–8
Fig. 6 – AC and Heater Box Breakdown, 1067918 4–10
Fig. 7 – Hydraulic Motor Breakdown, 1027756 4–12
Fig. 8 – Hydraulic Motor Breakdown, 1054901 4–14
Fig. 9 – Hydraulic Piston Pump Breakdown, 1029254 4–16
Fig. 10 – Hydraulic Piston Pump Breakdown, 1054905 4–18

Fig. 1 - Hydraulic Motor Breakdown, 379608

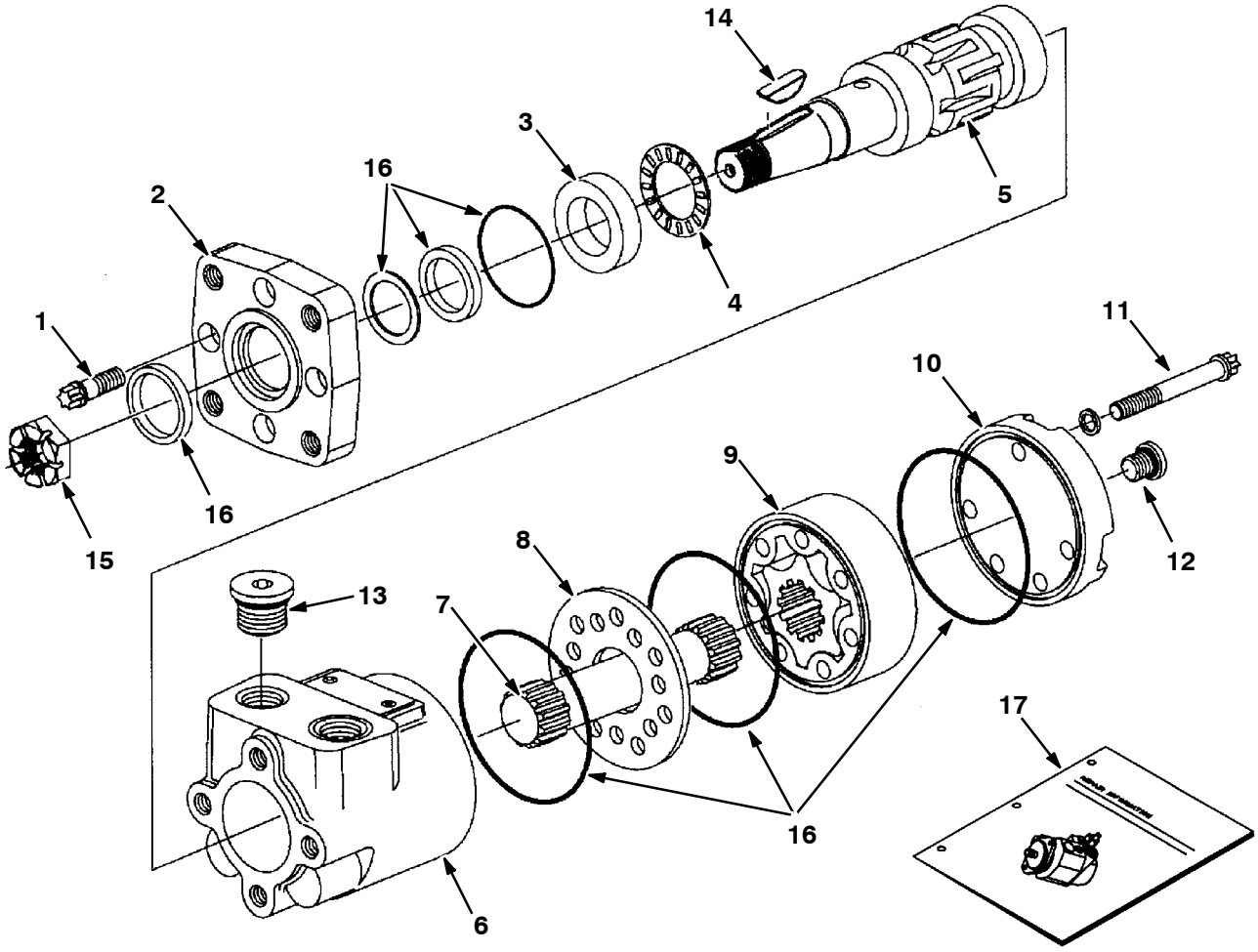

09606 - 09670

	Ref.	Part No.	Serial Number	Description	Qty.
▽		379608	(000000-)	Motor, Hyd, Gear, [In] 02.8 1500	1
▲	1	37555	(000000-)	Screw, Motor, Hyd	4
▲	2	31354	(000000-)	Flange, Motor, Hyd	1
▲	3	16695	(000000-)	Race, Thrust, Motor, Hyd	1
▲	4	45628	(000000-)	Bearing, Thrust, Motor, Hyd	1
▲	5	31375	(000000-)	Shaft, Output, Motor, Hyd	1
▲	6	74100	(000000-)	Housing, Motor, Hyd	1
▲	7	34176	(000000-)	Drive, Motor, Hyd	1
▲	8	74094	(000000-)	Plate, Spacer, Motor, Hyd	1
▲	9	31381	(000000-)	Gerotor Set, Motor, Hyd	1
▲	10	74095	(000000-)	End Cap, Motor, Hyd	1
▲	11	74174	(000000-)	Cap, Screw, Strg Valve	5
▲	12	74098	(000000-)	Fitting, Plug, O-Ring, #4	1
▲	13	74099	(000000-)	Fitting, Plug, O-Ring, Motor, Hyd	2
▲	14	00500-15	(000000-)	Key, Woodruff, 0.25 1.00, [Asa#0808]	1
▲	15	39527	(000000-)	Nut, Hex, Sltd, .75-16	1
▲	16	22654	(000000-)	Kit, Seal, Motor, Hyd	1
	17	74250	(000000-)	Instr, Motor, Hyd, Repair [En]	1

Fig. 2 - Hydraulic Motor Breakdown, 379607

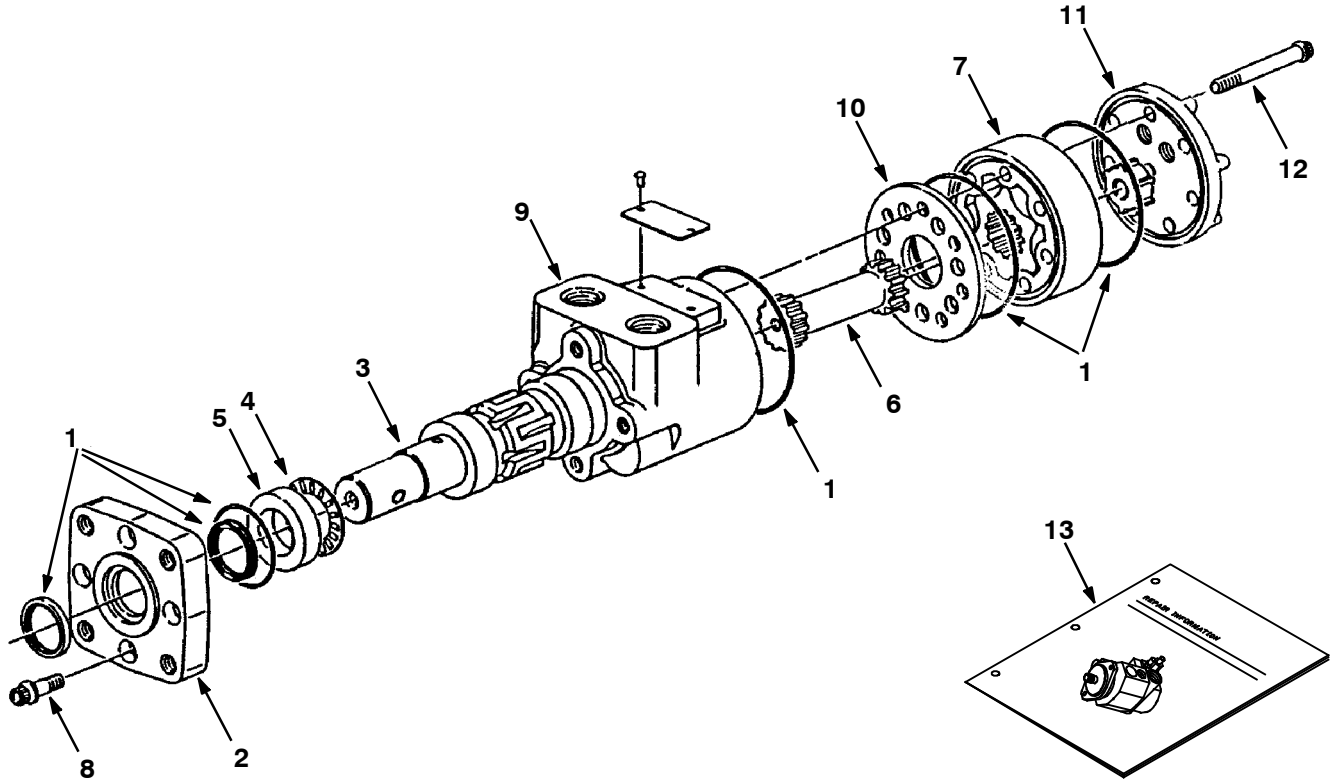

08926 - 09670

	Ref.	Part No.	Serial Number	Description	Qty.
▽		379607	(000000–)	Motor, Hyd, Gear, [In] 17.9 B 1500	1
▲	1	22654	(000000–)	Kit, Seal, Motor, Hyd	1
▲	2	31354	(000000–)	Flange, Motor, Hyd	1
▲	3	31373	(000000–)	Shaft, Output, Motor, Hyd	1
▲	4	45628	(000000–)	Bearing, Thrust, Motor, Hyd	1
▲	5	16695	(000000–)	Race, Thrust, Motor, Hyd	1
▲	6	31380	(000000–)	Drive, Motor, Hyd	1
▲	7	31385	(000000–)	Gerotor Set, Motor, Hyd	1
▲	8	37555	(000000–)	Screw, Motor, Hyd	4
▲	9	74100	(000000–)	Housing, Motor, Hyd	1
▲	10	74094	(000000–)	Plate, Spacer, Motor, Hyd	1
▲	11	74101	(000000–)	Cap, End, Motor, Hyd	1
▲	12	65232	(000000–)	Screw, Cap, Motor, Hyd	5
	13	74250	(000000–)	Instruction, Repair, Motor, Hyd	1

Fig. 3 - Hydraulic Steering Valve Breakdown, 1024260

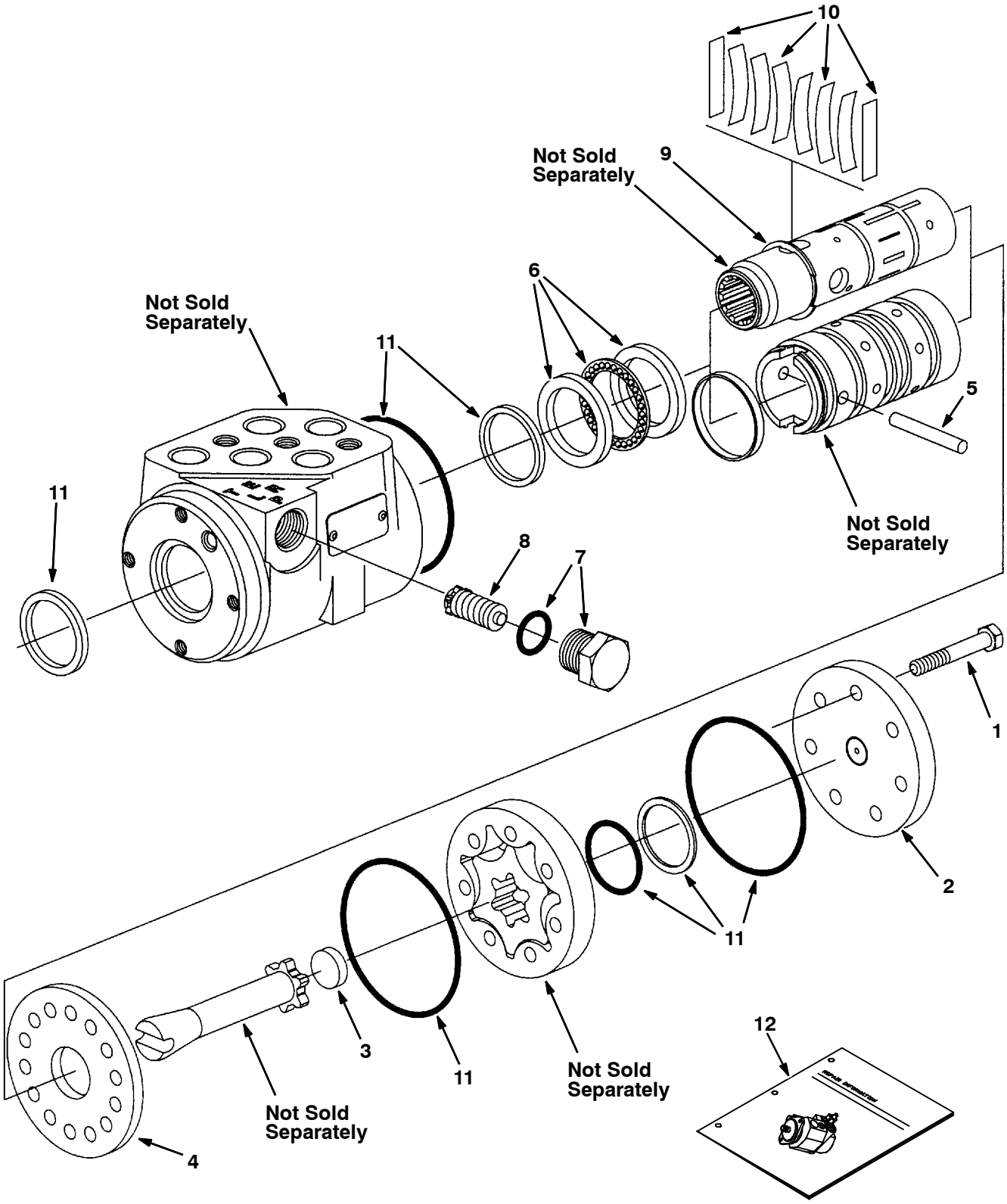

Fig. 3 - Hydraulic Steering Valve Breakdown, 1024260

	Ref.	Part No.	Serial Number	Description	Qty.
▽		1024260	(000000-)	Steer-Control, Hyd05, 06.1 2030	1
▲	1	74183	(000000-)	Screw, Valve, Steering	7
▲	2	74185	(000000-)	Cap, End, Valve, Steering	1
▲	3	74193	(000000-)	Spacer, Valve, Steering	1
▲	4	74222	(000000-)	Plate, Wear, Steering Valve	1
▲	5	74232	(000000-)	Pin, Valve, Steering	1
▲	6	21935	(000000-)	Bearing Kit [Cl]	1
▲	7	21933	(000000-)	Plug Assy [Cl]	1
▲	8	21934	(000000-)	Valve Assy, Relief [Cl]	1
▲	9	74243	(000000-)	Ring, Retainer, Steering Valve	1
▲	10	74196	(000000-)	Spring Kit, Scu [Cl]	1
▲	11	74244	(000000-)	Seal Kit, Steering [Cl]	1
▲	12	74245	(000000-)	Instr, Valve, Steering, Repair	1

Fig. 4 - Hydraulic Valve Breakdown, 1040091

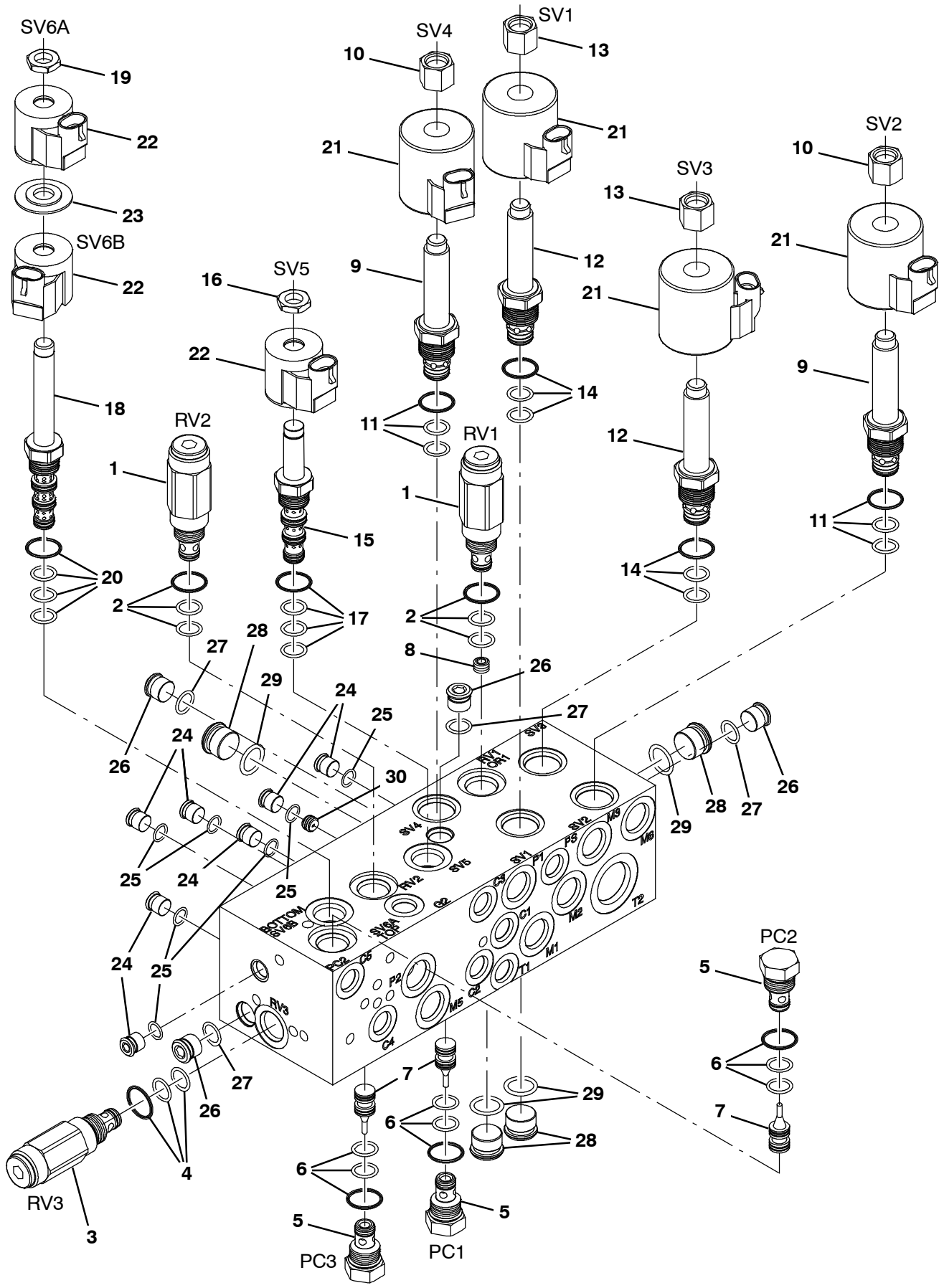

354750

Fig. 4 - Hydraulic Valve Breakdown, 1040091

	Ref.	Part No.	Serial Number	Description	Qty.
▽		1040091	(000000-)	Valve, Hyd, Solenoid, 12vdc [06s]	1
▲▽	1	373691	(000000-)	Valve, Relief	2
▲▲	2	373647	(000000-)	Seal Kit, Cartridge	1
▲▽	3	373692	(000000-)	Valve, Relief	1
▲▲	4	373647	(000000-)	Seal Kit, Cartridge	1
▲▽	5	373656	(000000-)	Valve, Check	3
▲▲	6	373647	(000000-)	Seal Kit, Cartridge	1
▲	7	373658	(000000-)	Spool, Pilot, Hyd	3
▲	8	373694	(000000-)	Plug, Orifice, Valve, Hyd, .040	1
▲▽	9	373663	(000000-)	Valve, Stem, No	2
▲▲	10	373685	(000000-)	Nut, Coil, Nyl Patch	1
▲▲	11	373646	(000000-)	Seal Kit, Cartridge	1
▲▽	12	373690	(000000-)	Valve, Stem, No	2
▲▲	13	373685	(000000-)	Nut, Coil, Nyl Patch	1
▲▲	14	373646	(000000-)	Seal Kit, Cartridge	1
▲▽	15	373657	(000000-)	Stem, Valve, Hyd [4w2p]	1
▲▲	16	373684	(000000-)	Nut, Coil, Nyl Patch	1
▲▲	17	373647	(000000-)	Seal Kit, Cartridge	1
▲▽	18	373637	(000000-)	Valve, Cntrl, Solenoid	1
▲▲	19	373684	(000000-)	Nut, Coil, Nyl Patch	1
▲▲	20	373647	(000000-)	Seal Kit, Cartridge	1
▲	21	373642	(000000-)	Solenoid, #10, 12vdc	4
▲	22	373640	(000000-)	Solenoid, #8, 12vdc	3
▲	23	373639	(000000-)	Spacer, Coil, #8	1
▲▽	24	74098	(000000-)	Fitting, Hyd, Plug, Om04	7
▲▲	25	77003	(000000-)	Seal, Org, .072 X 00.35id #04	1
▲▽	26	13904	(000000-)	Fitting, Plug, Org, #6, Valve [Cec]	4
▲▲	27	77005	(000000-)	Seal, Org, .078 X 00.47id #06	1
▲▽	28	13907	(000000-)	Fitting, Hyd, Plug, Om08	4
▲▲	29	77006	(000000-)	Seal, Org, .087 X 00.64id #08	1
▲	30	373665	(000000-)	Plug, Orifice, Valve, Hyd, .046	1

Fig. 5 - Hydraulic Valve Breakdown, 1034671

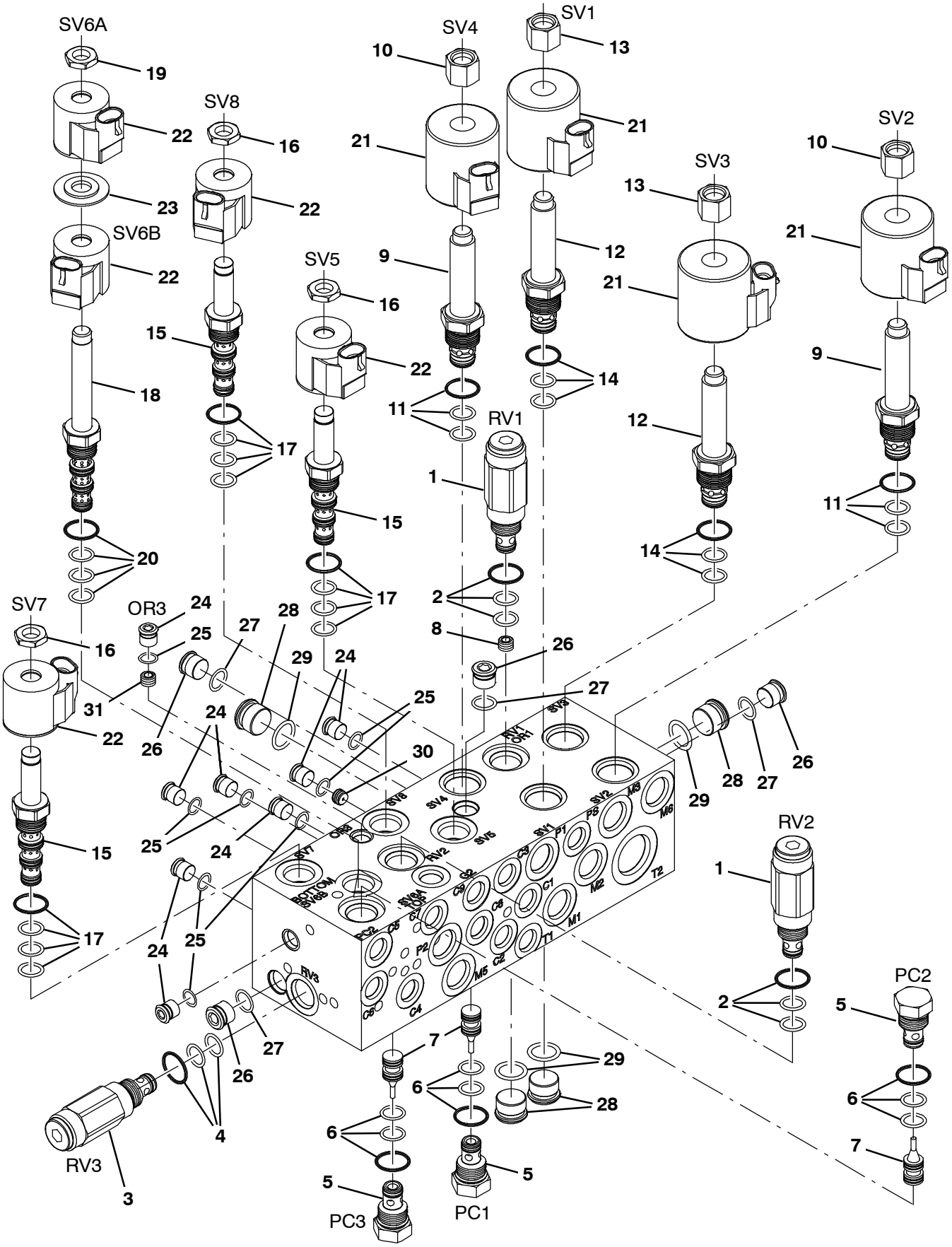

354751

Fig. 5 - Hydraulic Valve Breakdown, 1034671

	Ref.	Part No.	Serial Number	Description	Qty.
▽		1034671	(000000-)	Valve, Hyd, Solenoid, 12vdc [06s]	1
▲▽	1	373691	(000000-)	Valve, Relief	2
▲▲	2	373647	(000000-)	Seal Kit, Cartridge	1
▲▽	3	373692	(000000-)	Valve, Relief	1
▲▲	4	373647	(000000-)	Seal Kit, Cartridge	1
▲▽	5	373656	(000000-)	Valve, Check	3
▲▲	6	373647	(000000-)	Seal Kit, Cartridge	1
▲	7	373658	(000000-)	Spool, Pilot, Hyd	3
▲	8	373694	(000000-)	Plug, Orifice, Valve, Hyd, .040	1
▲▽	9	373663	(000000-)	Valve, Stem, No	2
▲▲	10	373685	(000000-)	Nut, Coil, Nyl Patch	1
▲▲	11	373646	(000000-)	Seal Kit, Cartridge	1
▲▽	12	373690	(000000-)	Valve, Stem, No	2
▲▲	13	373685	(000000-)	Nut, Coil, Nyl Patch	1
▲▲	14	373646	(000000-)	Seal Kit, Cartridge	1
▲▽	15	373657	(000000-)	Stem, Valve, Hyd [4w2p]	3
▲▲	16	373684	(000000-)	Nut, Coil, Nyl Patch	1
▲▲	17	373647	(000000-)	Seal Kit, Cartridge	1
▲▽	18	373637	(000000-)	Valve, Cntrl, Solenoid	1
▲▲	19	373684	(000000-)	Nut, Coil, Nyl Patch	1
▲▲	20	373647	(000000-)	Seal Kit, Cartridge	1
▲	21	373642	(000000-)	Solenoid, #10, 12vdc	4
▲	22	373640	(000000-)	Solenoid, #8, 12vdc	5
▲	23	373639	(000000-)	Spacer, Coil, #8	1
▲▽	24	74098	(000000-)	Fitting, Hyd, Plug, Om04	8
▲▲	25	77003	(000000-)	Seal, Org, .072 X 00.35id #04	1
▲▽	26	13904	(000000-)	Fitting, Plug, Org, #6, Valve [Cec]	4
▲▲	27	77005	(000000-)	Seal, Org, .078 X 00.47id #06	1
▲▽	28	13907	(000000-)	Fitting, Hyd, Plug, Om08	4
▲▲	29	77006	(000000-)	Seal, Org, .087 X 00.64id #08	1
▲	30	373665	(000000-)	Plug, Orifice, Valve, Hyd, .046	1
▲	31	373693	(000000-)	Plug, Orifice, Valve, Hyd, .035	1

Fig. 6 - AC and Heater Box Breakdown, 1067918

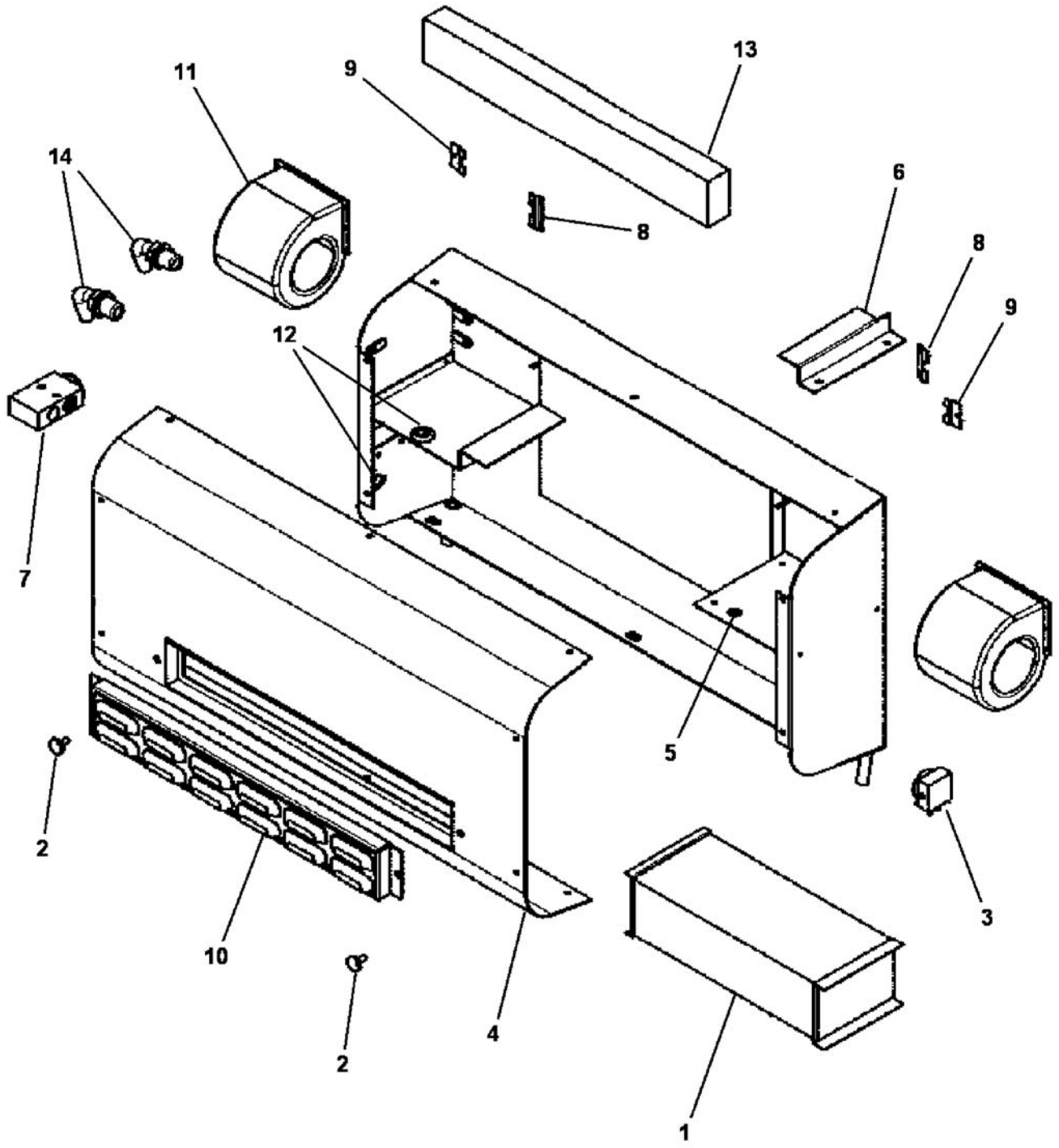

354773

Fig. 6 - AC and Heater Box Breakdown, 1067918

	Ref.	Part No.	Serial Number	Description	Qty.
▽		1067918	(000000–)	Heater & A/C Assy, W/Fan	1
▲	1	9004590	(000000–)	Coil, Heater / Evaporator	1
▲	2	9004591	(000000–)	Knob	2
▲	3	9004592	(000000–)	Thermostat, Heater/Air	1
▲	4	9004593	(000000–)	Cover	1
▲	5	9004594	(000000–)	Grommet, Rbr, .25Id .375Od	1
▲	6	9004595	(000000–)	Bracket, Coil, Mtg	1
▲	7	9004596	(000000–)	Valve, Expansion	1
▲	8	9004597	(000000–)	Clip, Keeper, Blower Mtg	2
▲	9	9004598	(000000–)	Clip, Keeper, Blower Mtg	2
▲	10	9004599	(000000–)	Cover, Access	1
▲	11	9004600	(000000–)	Blown, Fan, Motor	2
▲	12	9004601	(000000–)	Grommet, Rbr, .50Id 1.0Od	2
▲	13	9004602	(000000–)	Filter	1
▲	14	9004603	(000000–)	Fitting, E90, Bm10/Pm08	2

Fig. 7 - Hydraulic Motor Breakdown, 1027756

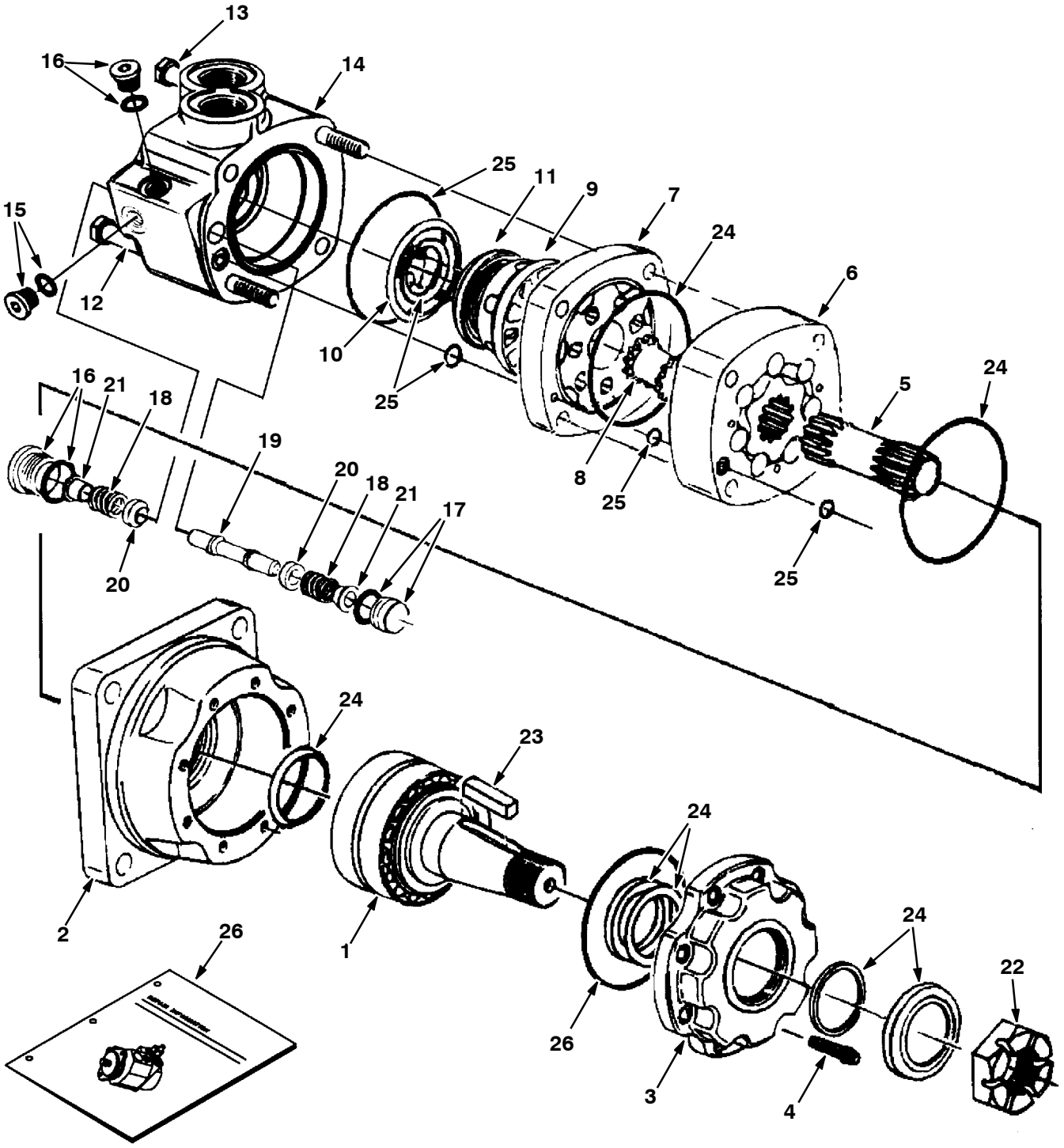

350628-09670

Fig. 7 - Hydraulic Motor Breakdown, 1027756

	Ref.	Part No.	Serial Number	Description	Qty.
▽		1027756	(000000-)	Motor, Hyd, Gear, [Int], 19.0 X 3000	1
▲	1	74165	(000000-)	Shaft, Motor, Hyd	1
▲	2	74166	(000000-)	Housing, Brg, Motor, Hyd	1
▲	3	74167	(000000-)	Retainer, Motor, Hyd	1
▲	4	74168	(000000-)	Screw, Cap, Motor, Hyd	8
▲	5	373695	(000000-)	Drive, Motor, Hyd	1
▲	6	373696	(000000-)	Geroler, Motor, Hyd	1
▲	7	74122	(000000-)	Plate, Valve, Motor, Hyd	1
▲	8	52405	(000000-)	Valve, Motor, Hyd	1
▲	9	74123	(000000-)	Valve, Motor, Hyd	1
▲	10	34178	(000000-)	Spring, Motor, Hyd	2
▲	11	38968	(000000-)	Ring, Motor, Hyd	1
▲	12	74125	(000000-)	Bolt, Motor, Hyd	3
▲	13	373697	(000000-)	Bolt, Motor, Hyd	1
▲	14	373297	(000000-)	Housing, Valve	1
▲	15	373298	(000000-)	Plug	1
▲	16	373545	(000000-)	Plug, Pump, Hyd, Gear	2
▲	17	373299	(000000-)	Plug	1
▲	18	373291	(000000-)	Spring	2
▲	19	373217	(000000-)	Piston, Pump, Hyd, Gear	1
▲	20	373226	(000000-)	Poppet, Pump, Hyd, Gear	2
▲	21	373236	(000000-)	Sleeve, Dashpo, Pump, Hyd, Gear	2
▲	22	45622	(000000-)	Nut, Motor, Hyd	1
▲	23	45623	(000000-)	Key, Motor, Hyd	1
▲	24	79828	(000000-)	Kit, Seal, Motor, Hyd	1
▲	25	33580	(000000-)	Kit, Seal, Motor, Hyd	1
	26	74249	(000000-)	Instr, Repair, Motor, Hyd, Gear	1

Fig. 8 - Hydraulic Motor Breakdown, 1054901

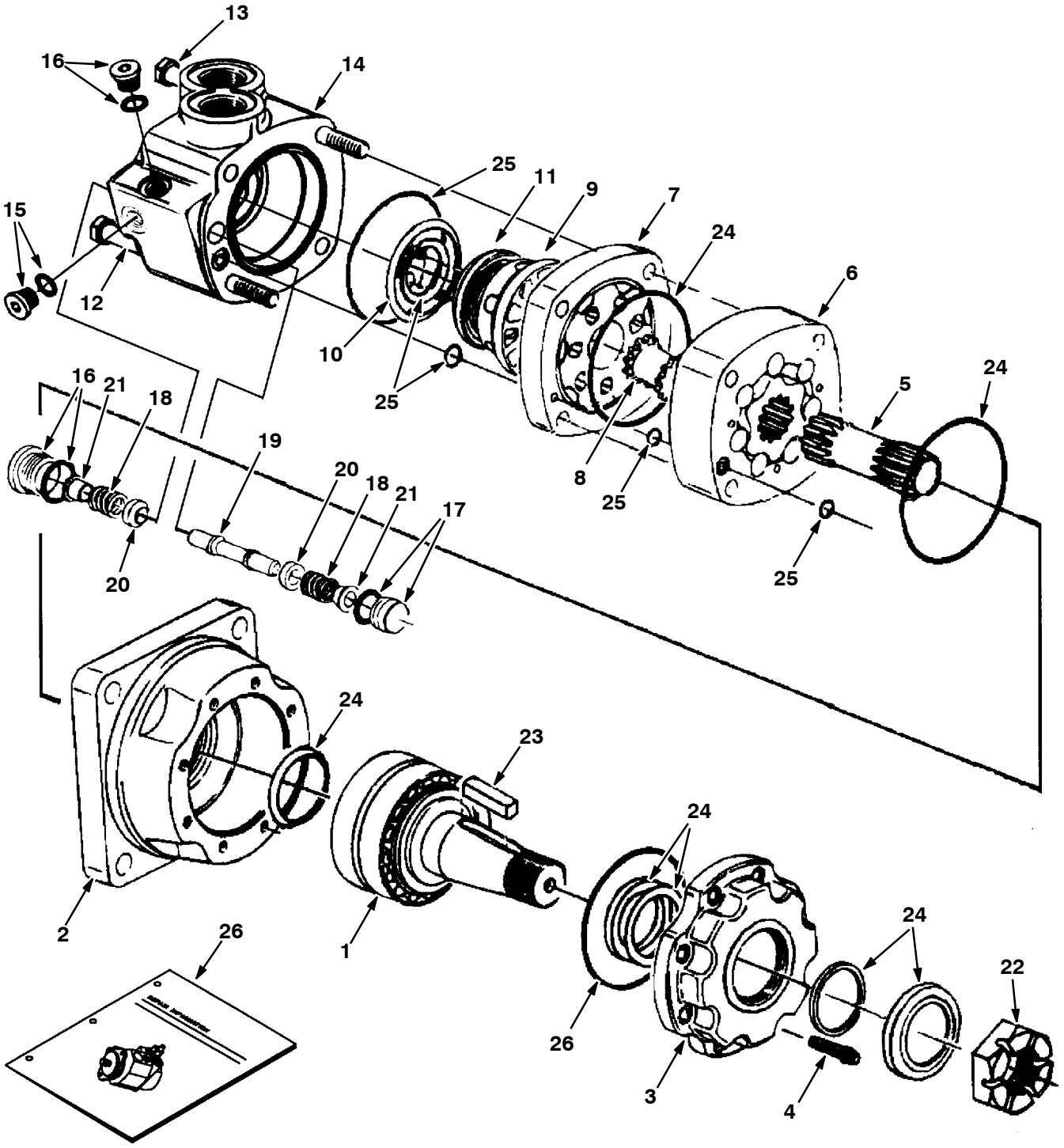

350628-09670

Fig. 8 - Hydraulic Motor Breakdown, 1054901

	Ref.	Part No.	Serial Number	Description	Qty.
▽		1054901	(000000-)	Motor, Hyd, Gear, Int 17.1 Bi-dir 3000	1
▲	1	74165	(000000-)	Shaft, Motor, Hyd	1
▲	2	74166	(000000-)	Housing, Brg, Motor, Hyd	1
▲	3	74167	(000000-)	Retainer, Motor, Hyd	1
▲	4	74168	(000000-)	Screw, Cap, Motor, Hyd	8
▲	5	373435	(000000-)	Drive, Motor, Hyd	1
▲	6	373436	(000000-)	Geroler, Motor, Hyd	1
▲	7	74122	(000000-)	Plate, Valve, Motor, Hyd	1
▲	8	52405	(000000-)	Valve, Motor, Hyd	1
▲	9	74123	(000000-)	Valve, Motor, Hyd	1
▲	10	34178	(000000-)	Spring, Motor, Hyd	2
▲	11	38968	(000000-)	Ring, Motor, Hyd	1
▲	12	373437	(000000-)	Bolt, Motor, Hyd	3
▲	13	373438	(000000-)	Bolt, Motor, Hyd	1
▲	14	373297	(000000-)	Housing, Valve	1
▲	15	373298	(000000-)	Plug	1
▲	16	373545	(000000-)	Plug, Pump, Hyd, Gear	2
▲	17	373299	(000000-)	Plug	1
▲	18	373291	(000000-)	Spring	2
▲	19	373543	(000000-)	Piston, Pump, Hyd, Gear	1
▲	20	373226	(000000-)	Poppet, Pump, Hyd, Gear	2
▲	21	373236	(000000-)	Sleeve, Dashpo, Pump, Hyd, Gear	2
▲	22	45622	(000000-)	Nut, Motor, Hyd	1
▲	23	45623	(000000-)	Key, Motor, Hyd	1
▲	24	79828	(000000-)	Kit, Seal, Motor, Hyd	1
▲	25	33580	(000000-)	Kit, Seal, Motor, Hyd	1
	26	74249	(000000-)	Instr, Repair, Motor, Hyd, Gear	1

Fig. 9 - Hydraulic Piston Pump Breakdown, 1029254

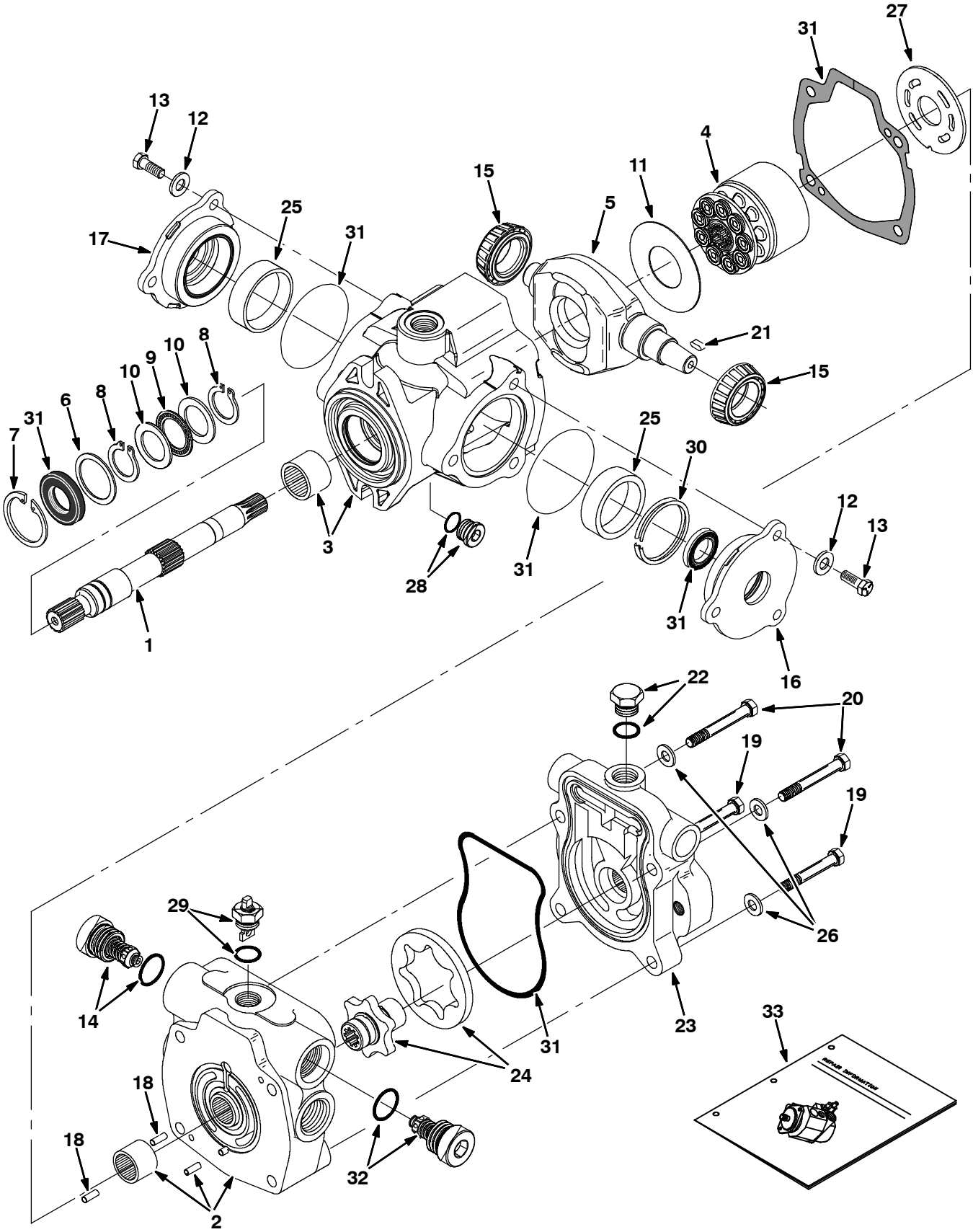

Fig. 9 - Hydraulic Piston Pump Breakdown, 1029254

	Ref.	Part No.	Serial Number	Description	Qty.
▽		1029254	(000000-)	Pump, Hyd, Piston, [V] 1.44 [R] 4000	1
▲	1	373699	(000000-)	Driveshaft, Pump, Hyd	1
▲	2	373430	(000000-)	Cover, End	1
▲	3	373389	(000000-)	Housing	1
▲	4	02706	(000000-)	Kit, Rotating, Pump, Hyd	1
▲	5	373493	(000000-)	Cam	1
▲	6	70096	(000000-)	Washer, Flt, Pump, Hyd	1
▲	7	55926	(000000-)	Ring, Retaining, Pump, Hyd	1
▲	8	373434	(000000-)	Ring, Retaining	2
▲	9	74225	(000000-)	Bearing, Thrust, Pump, Hyd	1
▲	10	74226	(000000-)	Race, Bearing, Pump, Hyd	2
▲	11	373327	(000000-)	Insert, Plate, Cam, Pump, Hyd	1
▲	12	373391	(000000-)	Washer, Pump, Hyd	6
▲	13	373346	(000000-)	Screw, Cap	6
▲	14	74259	(000000-)	Valve, Relief, Pump	1
▲	15	373317	(000000-)	Bearing, Cone, Pump, Hyd	2
▲	16	373393	(000000-)	Plate, Cover	1
▲	17	373394	(000000-)	Plate, Cover	1
▲	18	70100	(000000-)	Pin, Dowel, Pump, Hyd	2
▲	19	373336	(000000-)	Screw, Cap, Pump, Hyd	2
▲	20	373337	(000000-)	Screw, Cap, Pump, Hyd	2
▲	21	74237	(000000-)	Key, Shaft, Pump, Hyd	1
▲	22	13907	(000000-)	Fitting, Plug, O-Ring	1
▲	23	373700	(000000-)	Adaptor Assy, Pump, Hyd	1
▲	24	373701	(000000-)	Gerotor, Pump, Hyd	1
▲	25	373395	(000000-)	Bearing, Cup	2
▲	26	373396	(000000-)	Washer	4
▲	27	74180	(000000-)	Plate, Valve, Pump, Hyd	1
▲	28	13907	(000000-)	Fitting, Plug, O-Ring	1
▲	29	373413	(000000-)	Actuator, Valve, Bypass	1
▲	30	373402	(000000-)	Kit, Shim	1
▲	31	373398	(000000-)	Kit, Seal, Hyd, Pump	1
▲	32	373678	(000000-)	Valve, Relief, 3000psi	1
	33	373429	(000000-)	Instr, Repair, Pump	1

Fig. 10 - Hydraulic Piston Pump Breakdown, 1054905

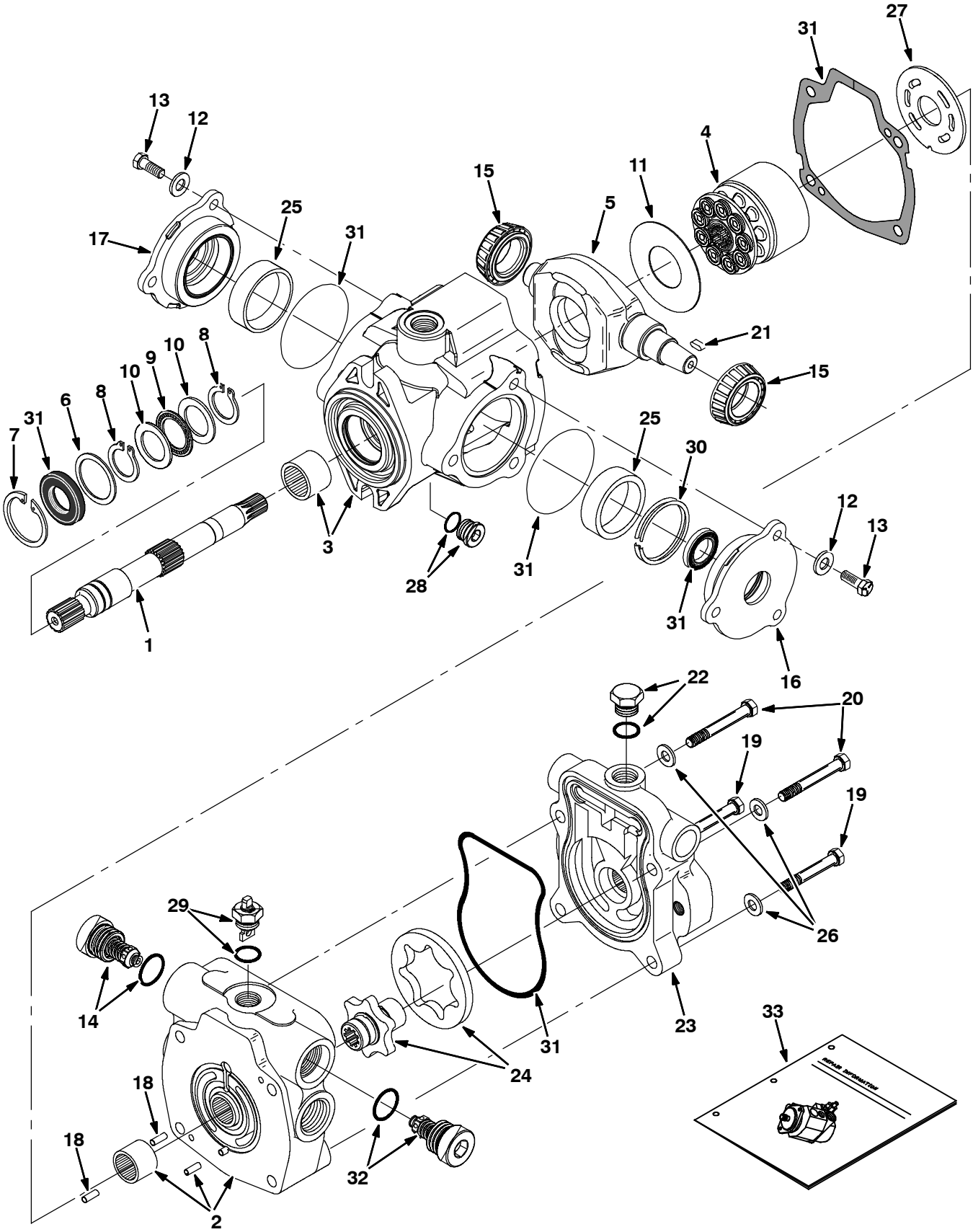

Fig. 10 - Hydraulic Piston Pump Breakdown, 1054905

	Ref.	Part No.	Serial Number	Description	Qty.
▽		1054905	(000000-)	Pump, Hyd, Piston, Var, 1.24 4500, Cw	1
▲	1	373699	(000000-)	Driveshaft, Pump, Hyd	1
▲	2	373430	(000000-)	Cover, End	1
▲	3	373389	(000000-)	Housing	1
▲	4	02706	(000000-)	Kit, Rotating, Pump, Hyd	1
▲	5	373493	(000000-)	Cam	1
▲	6	70096	(000000-)	Washer, Flt, Pump, Hyd	1
▲	7	55926	(000000-)	Ring, Retaining, Pump, Hyd	1
▲	8	373434	(000000-)	Ring, Retaining	2
▲	9	74225	(000000-)	Bearing, Thrust, Pump, Hyd	1
▲	10	74226	(000000-)	Race, Bearing, Pump, Hyd	2
▲	11	373327	(000000-)	Insert, Plate, Cam, Pump, Hyd	1
▲	12	373391	(000000-)	Washer, Pump, Hyd	6
▲	13	373346	(000000-)	Screw, Cap	6
▲	14	74259	(000000-)	Valve, Relief, Pump	1
▲	15	373317	(000000-)	Bearing, Cone, Pump, Hyd	2
▲	16	373393	(000000-)	Plate, Cover	1
▲	17	373394	(000000-)	Plate, Cover	1
▲	18	70100	(000000-)	Pin, Dowel, Pump, Hyd	2
▲	19	373336	(000000-)	Screw, Cap, Pump, Hyd	2
▲	20	373337	(000000-)	Screw, Cap, Pump, Hyd	2
▲	21	74237	(000000-)	Key, Shaft, Pump, Hyd	1
▲	22	13907	(000000-)	Fitting, Plug, O-Ring	1
▲	23	373700	(000000-)	Adaptor Assy, Pump, Hyd	1
▲	24	373701	(000000-)	Gerotor, Pump, Hyd	1
▲	25	373395	(000000-)	Bearing, Cup	2
▲	26	373396	(000000-)	Washer	4
▲	27	74180	(000000-)	Plate, Valve, Pump, Hyd	1
▲	28	13907	(000000-)	Fitting, Plug, O-Ring	1
▲	29	373413	(000000-)	Actuator, Valve, Bypass	1
▲	30	373402	(000000-)	Kit, Shim	1
▲	31	373398	(000000-)	Kit, Seal, Hyd, Pump	1
▲	32	373431	(000000-)	Valve, Relief, 3500psi	1
	33	373429	(000000-)	Instr, Repair, Pump	1

SECTION 5

Contents **Page**

Fig. 1 – Cylinder Head and Valves Group 5-2
Fig. 2 – Crankshaft and Pistion Group 5-4
Fig. 3 – Oil and Water Pump Group 5-6
Fig. 4 – Oil Pan and Filter Group 5-8
Fig. 5 – Manifold Group 5-9
Fig. 6 – Camshaft Group 5-10
Fig. 7 – Ignition Group 5-12

Fig. 1 - Cylinder Head and Valves Group

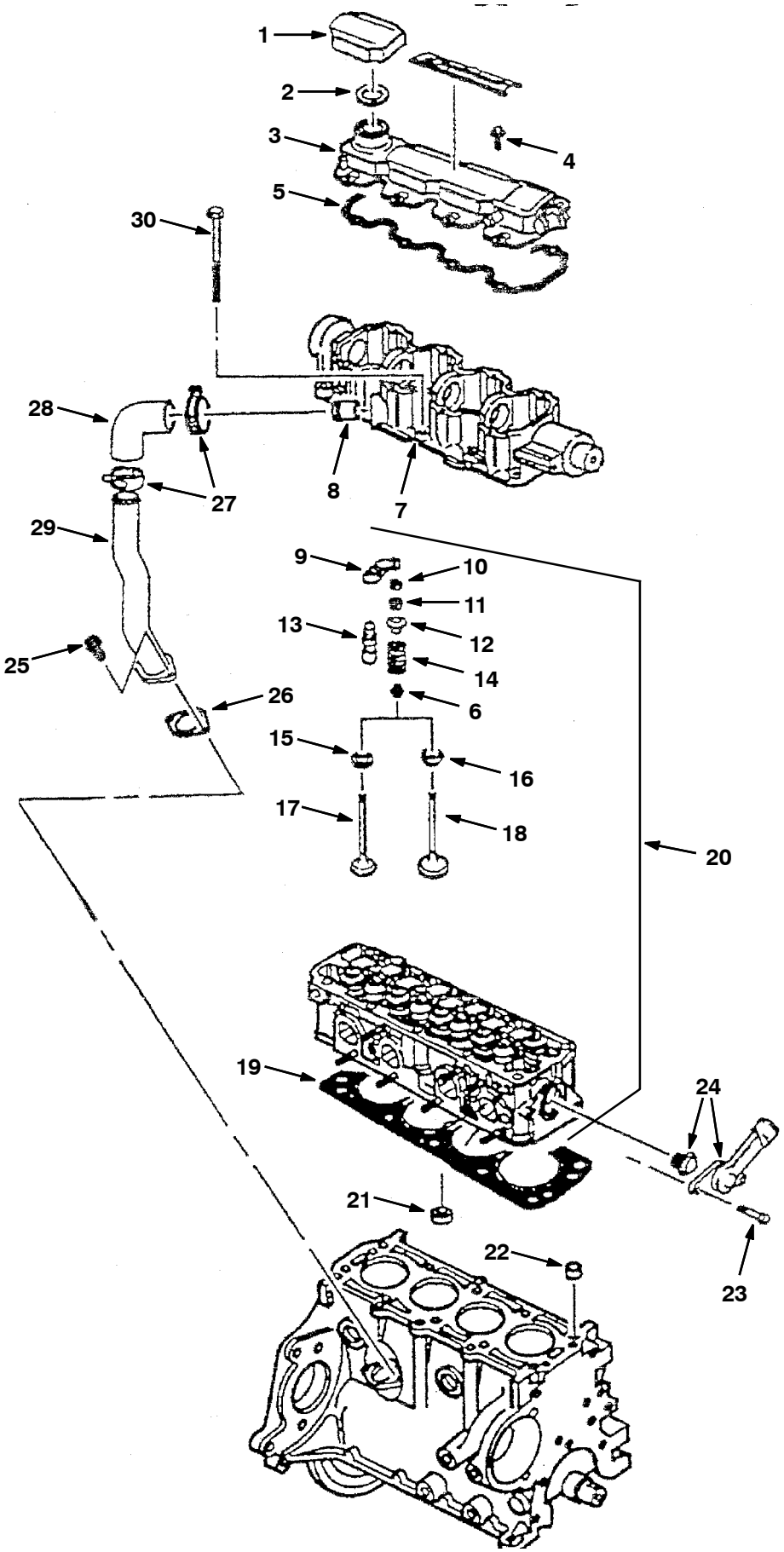

G, LP

Fig. 1 - Cylinder Head and Valves Group

Ref.	Part No.	Description	Qty.
1	372574	Cap, Filler, Oil, W/ Org	1
2	372573	Seal, Org, Cap	1
3	372007	Cover, Hsng, Camshaft	1
4	371990	Bolt, Camshaft Cover	8
5	372008	Gasket, Cover, Hsng, Camshaft	1
6	9003345	Seal, Seat, Valve	8
7	372018	Housing, Camshaft	1
8	372019	Tube [Pcv]	1
9	372030	Arm, Rocker, Valve	8
10	372031	Seat, Spring, Valve, 0.333	8
11	372033	Key, Valve Stem	16
12	372034	Cap, Spring, Valve	4
13	372035	Screw, Adj, Valve, Hyd	8
14	372036	Spring, Valve	8
15	372037	Seat, Rotator, Valve	4
16	372032	Seat, Spring, Valve	8
17	372038	Valve, Exhaust	4
18	372039	Valve, Intake	1
19	372022	Gasket, Head, Cyl	1
20	372023	Head, Cyl	1
21	372024	Seat, Valve, Exhaust, [+0.2mm]	4
21	372025	Seat, Valve, Exhaust, Std	4
21	372026	Seat, Valve, Exhaust, [+0.4mm]	4
21	372027	Seat, Valve, Intake, Std	4
21	372028	Seat, Valve, Intake, [+0.2mm]	4
21	372029	Seat, Valve, Intake, [+0.4mm]	4
22	371999	Pin, Lock, Cyl Head, 14mm X 17mm	2
23	372048	Bolt, Hsng, Thermostat	2
24	372047	Thermostat, W/ Hsng And Seal	1
25	371957	Bolt, Tube [Pvc], M6 X 1 X 15	2
26	371958	Gasket, Tube [Pcv]	1
27	371954	Clamp, Hose, 1.75 [Pcv]	2
28	371955	Hose [Pcv]	1
29	371956	Tube [Pcv]	1
30	372882	Bolt, Head. Cyl	10

Fig. 2 - Crankshaft and Pistion Group

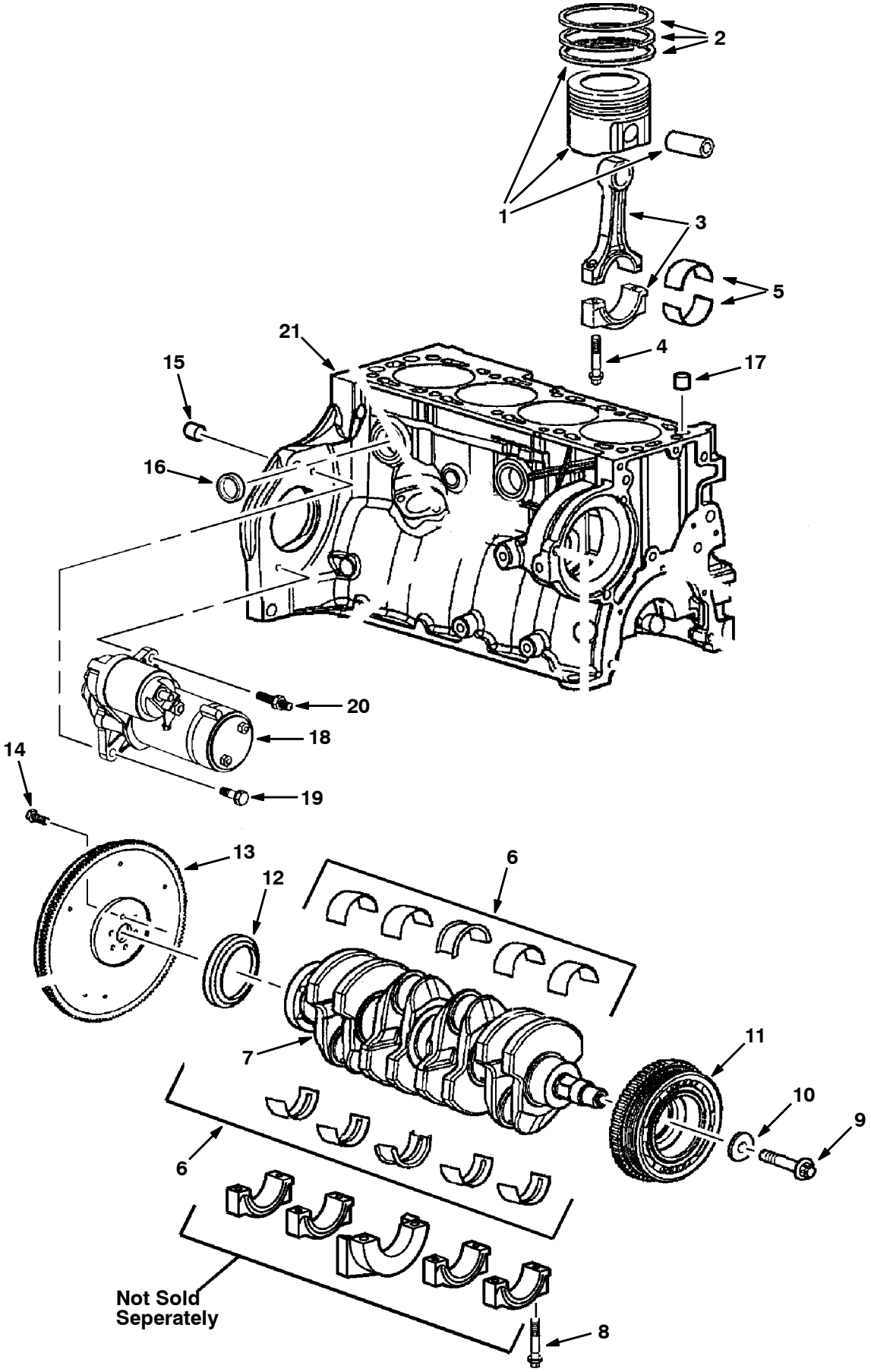

G, LP

Fig. 2 - Crankshaft and Piston Group

	Ref.	Part No.	Description	Qty.
▽	1	371932	Piston, W/ Pin, Std	1
▲	2	371931	Ring Kit, Piston, Std 78.95-79.02mm	4
	3	371934	Rod, Connecting, M08 X 45	4
	4	371935	Bolt, Connecting Rod	8
	5	371933	Bearing Kit, Rod, Connecting, Std	1
	6	371966	Bearing Kit, Cshft, 1.995-2.001mm (Brown Blue)	4
	6	371967	Bearing Kit, Cshft, 2.120-2.126mm	4
	6	371968	Bearing Kit, Cshft, 2.114-2.120mm	4
	6	371969	Bearing Kit, Cshft, 1.989-1.995mm (Brown)	4
	6	371970	Bearing Kit, Cshft, 1.989-1.995mm (Green Blue)	4
	6	371971	Bearing Kit, Cshft, 1.995-2.001mm (Green)	4
	7	371965	Crankshaft	1
	8	371946	Bolt, M10 X 1.50 X 75mm	10
	9	384961	Bolt, Pulley, Cshft	1
	10	371937	Washer, Sheave, Cshft	1
	11	371936	Sheave, Cshft	1
	12	371945	Seal, Oil, Cshft	1
▽	13	371979	Flywheel	1
▲		371977	Gear, Ring, Starter	1
	14	371976	Bolt, Flywheel	6
	15	371978	Pin, Lock, Transmission	2
	16	371942	Plug, Hole, Coolant, Eng Block	6
	17	371999	Pin, Lock, Cyl Head, 14mm X 17mm	2
	18	384963	Starter, 12vdc [Delco] (Mar. 2006 and Newer)	1
	19	384964	Bolt, M08 X 1.25 X 25mm	1
	20	371964	Stud, Starter, M08 X 1.25	1
	21	371944	Block, Short, Eng, W/ Piston & Ring	1

Fig. 3 - Oil and Water Pump Group

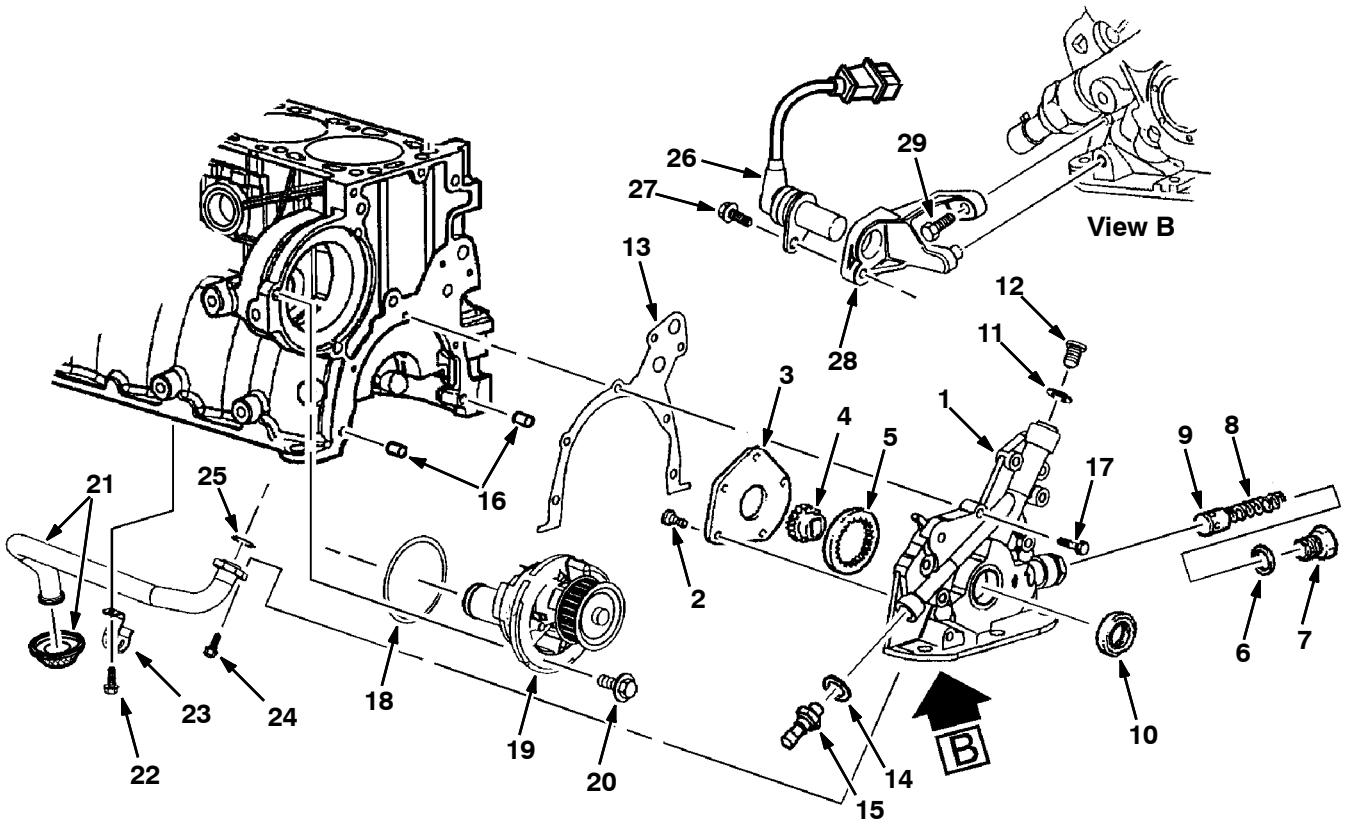

G, LP

Fig. 3 - Oil and Water Pump Group

	Ref.	Part No.	Description	Qty.
▽	1	372572	Pump, Oil	1
▲	2	371947	Bolt, Cover, Oil Pump, M6 X 14	5
▲	3	371948	Cover, Pump, Oil	1
▲	4	371949	Gear, Ring, Drive, Oil Pump	1
▲	5	371950	Gear, Drive, Oil Pump	1
▲	6	371998	Gasket, Plug, Relief Valve,Oil Press	1
▲	7	371994	Plug, Bore, Valve, Relief, Oil Press	1
▲	8	371993	Spring, Valve, Relief, Oil Press	1
	9	371997	Valve, Relief, Oil Press	1
	10	372005	Seal, Org, Oil Pump	1
	11	371951	Seal, Org, Hsng, Oil Pump	1
	12	371952	Plug, Hsng, Oil Pump	1
	13	371984	Gasket, Pump, Oil	1
	14	371987	Seal, Org, Press Switch / Drain Plug	1
	15	371996	Switch, Indicator, Oil Press	1
	16	371983	Pin, Ring, Lock, Hsng, Water Pump	2
	17	371986	Bolt, Pump, Oil	6
	18	372567	Seal, Org, Water Pump	1
	19	371981	Pump, Water [Gm]	1
	20	371980	Bolt, Cover, Water Pump	3
	21	372001	Screen, Oil Pump, W/ Suc Pipe	1
	22	371991	Bolt, Bracket,Screen,Oil Pump,M6x1x1	1
	23	384966	Bracket, Screen, Oil Pump	1
	24	371990	Bolt, Oil Pump Screen/Camshaft Cover	2
	25	371988	Seal, Ring, Pipe, Suc, Oil Pump	1
	26	372002	Sensor, Position, Cshft	1
	27	384968	Bolt, Bracket, Sensor,Cshft Position	1
	28	372003	Bracket, Sensor, Position, Cshft	1
	29	372004	Bolt, Sensor, Position, Cshft	3

Fig. 4 - Oil Pan and Filter Group

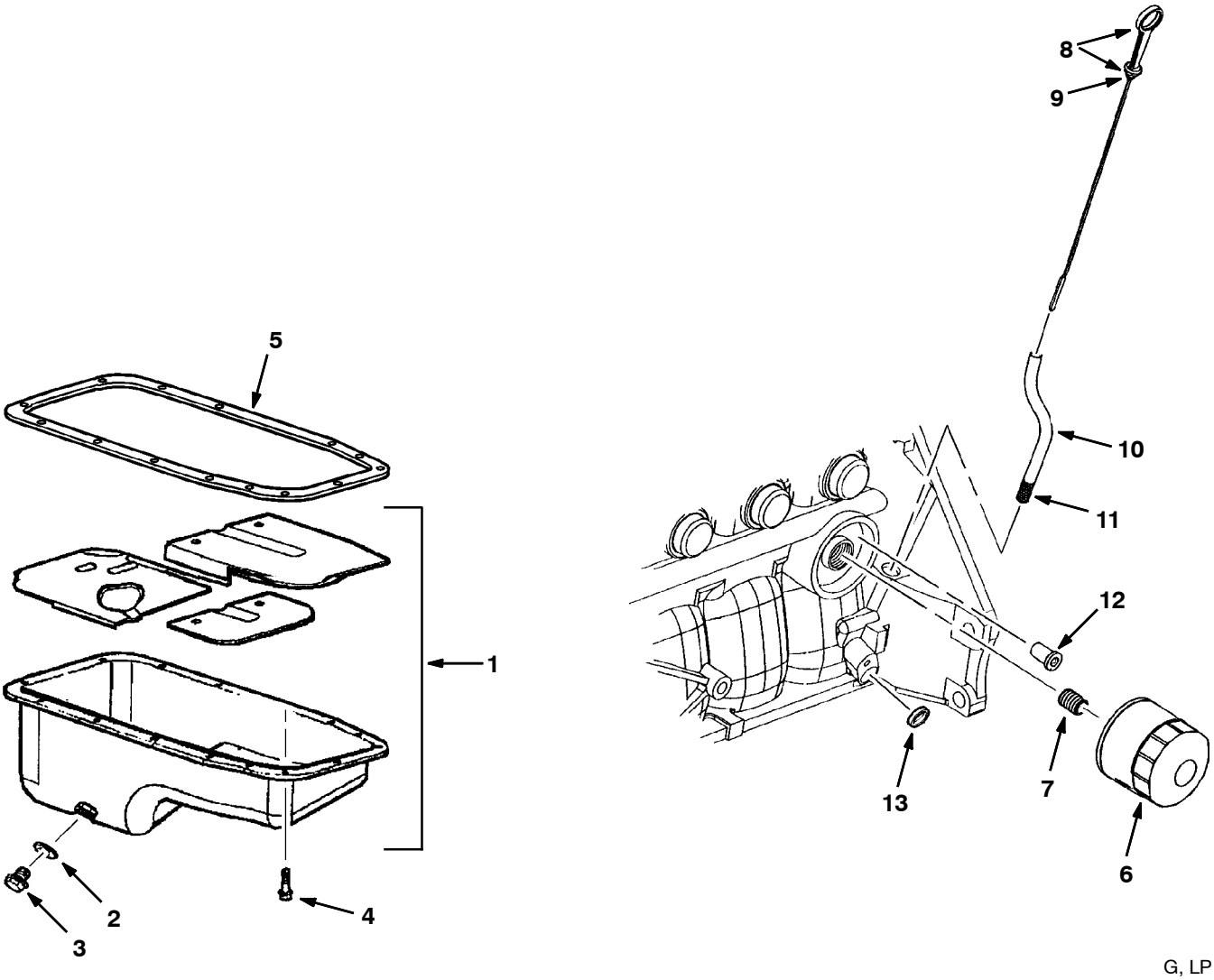

G, LP

	Ref.	Part No.	Description	Qty.
▽	1	371960	Pan, Oil, W/ Baffle / Plug / Seal	1
▲	2	371987	Seal, Org, Press Switch / Drain Plug	1
▲	3	371992	Plug, Drain, Oil Pan, M14 X 1.5 X 12	1
	4	384962	Bolt, Pan, Oil	15
	5	371959	Gasket, Pan, Oil	1
	6	371972	Element, Fltr, Oil, Eng, Spin-On (GM)	4
	7	371973	Fitting, Fltr, Oil	1
▽	8	372560	Dipstick, Oil	1
▲	9	371995	Seal, Org, Cap, Fltr, Oil	1
	10	371940	Tube, Ds	1
	11	371941	Sealant, Tube, Ds	1
	12	371975	Valve, By-Pass, Oil Fltr	1
	13	371943	Plug, Hole, Core, Eng Block	1

Fig. 5 - Manifold Group

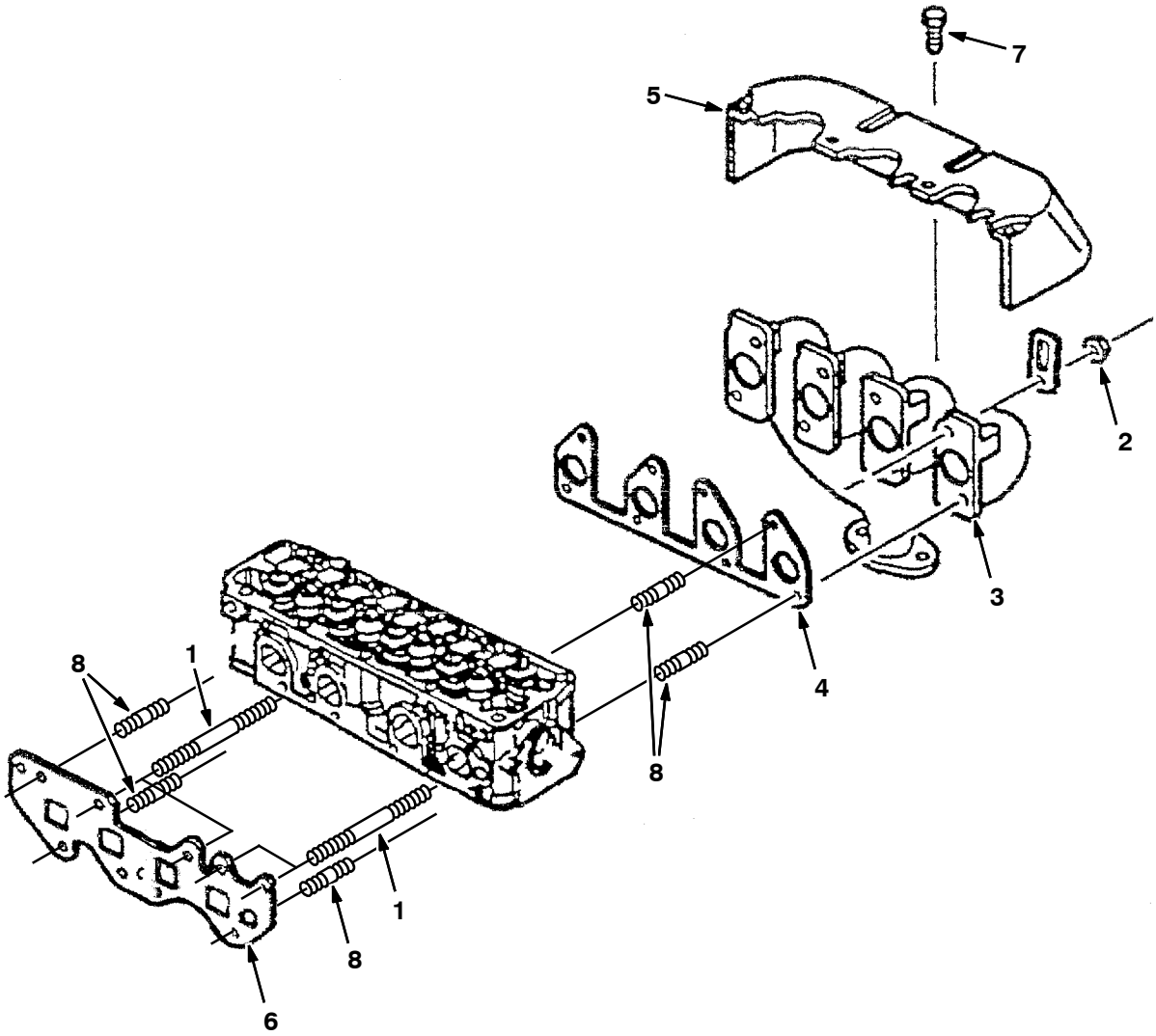

G, LP

Ref.	Part No.	Description	Qty.
1	372021	Stud, Manifold, M8 X 96	4
2	372049	Nut, Manifold, Exhaust, M8 X 1.25	8
3	372050	Manifold, Exhaust	1
4	372051	Gasket, Manifold, Exhaust	1
5	372052	Shield, Manifold, Exhaust	1
6	372053	Gasket, Manifold, Intake	1
7	372066	Bolt, Shield, Manifold, Exhaust	5
8	372020	Stud, Manifold, M8 X 28	13

Fig. 6 - Camshaft Group

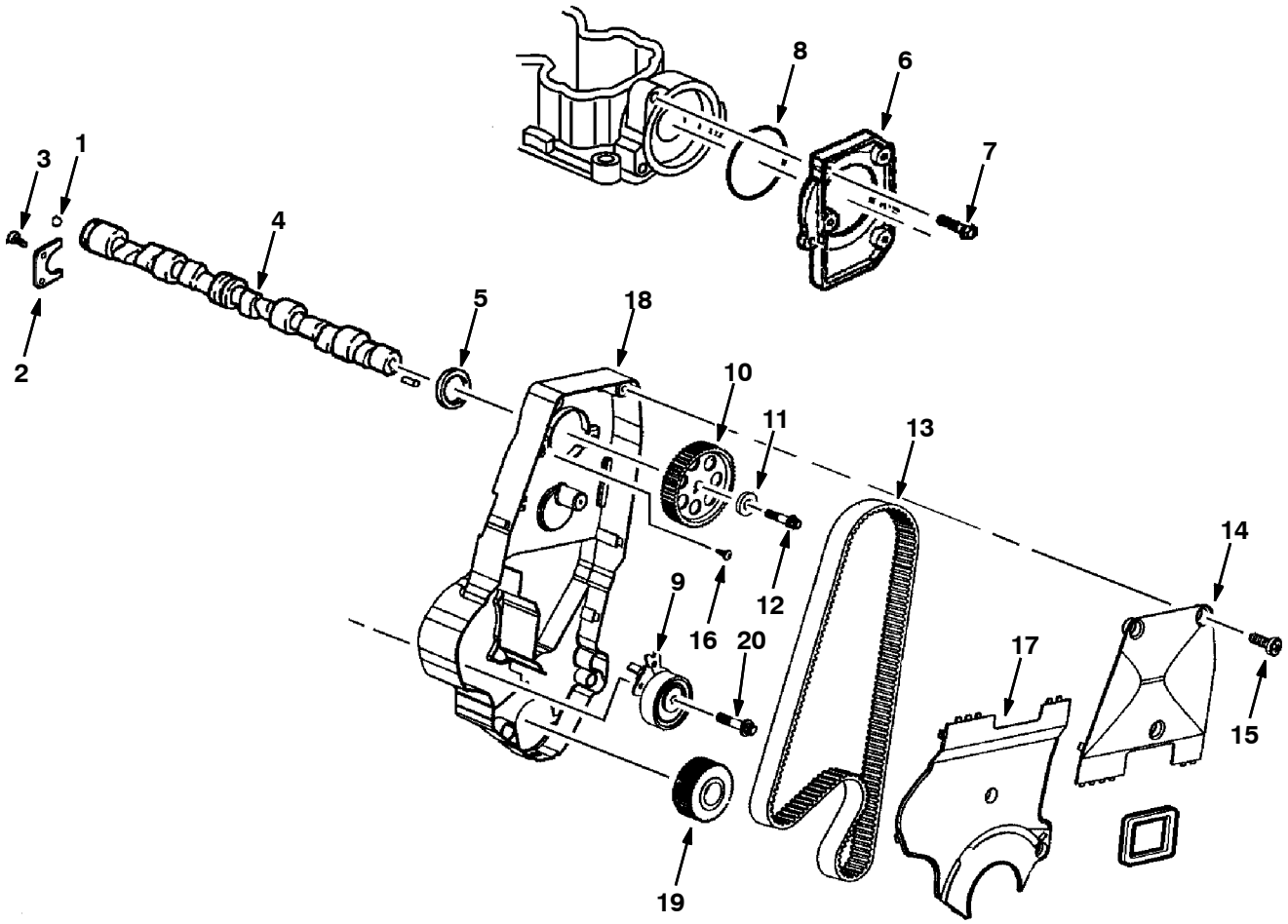

G, LP

Fig. 6 - Camshaft Group

Ref.	Part No.	Description	Qty.
1	372009	Ball, Camshaft	1
2	372010	Retainer, Camshaft	1
3	372011	Bolt, Retainer, Camshaft, M6 X 1 X 16	2
4	372012	Camshaft	1
5	372013	Seal, Org, Bolt, Cover, Camshaft Hsng	1
6	372014	Cover, Hsng, Camshaft	1
7	372015	Bolt, Cover, Camshaft, M6 X 1 X 22	3
8	372016	Seal, Org, Bolt, Cover, Camshaft Hsng	1
9	9004674	Pulley, Tensioner [Gm]	1
10	372040	Sprocket, Camshaft	1
11	372017	Washer, Sprkt, Camshaft	1
12	372041	Bolt, Sprocket, Camshaft, M10x1.25x60	1
13	1057029	Belt, Timing [Gm1.6l]	1
14	372043	Cover, Belt, Timing, Upper Front	1
15	371961	Bolt, Eng Cover, M6 X 1 X 13	6
16	372046	Bolt, Tensioner, Timing Belt,M8x1.25x48	1
17	372044	Cover, Belt, Timing, Lower Front	1
18	372616	Housing, Camshaft	1
19	388552	Sprocket, Crankshaft	1
20	9004675	Bolt, Tensioner [Gm]	1

Fig. 7 - Ignition Group

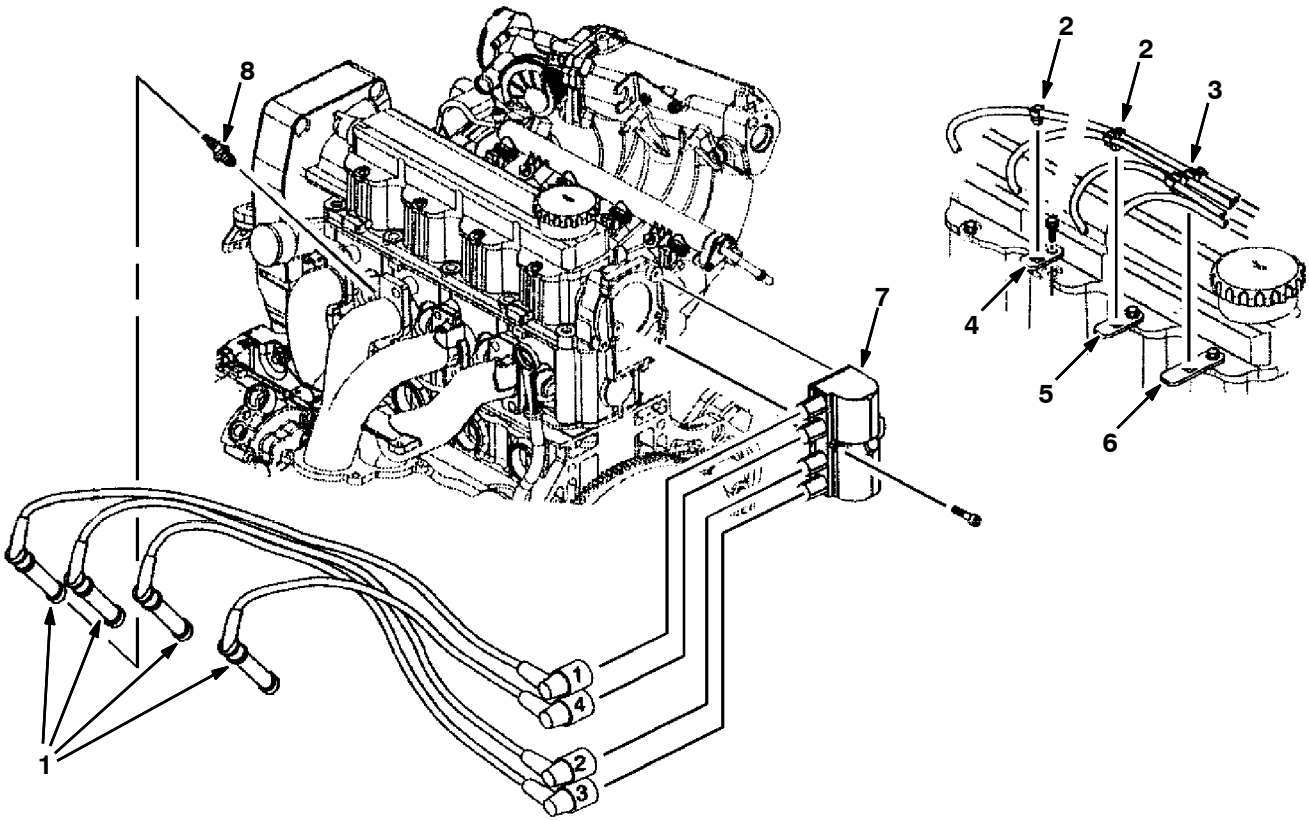

G, LP

Ref.	Part No.	Description	Qty.
1	372603	Wire Set, Sparkplug [1.6l]	1
2	372055	Retainer, Sparkplug, 2 Way	2
3	372056	Retainer, Sparkplug, 3 Way	1
4	372057	Bracket, Retaining, Wire, Sparkplug	1
5	372058	Bracket, Retaining, Wire, Sparkplug	1
6	372059	Bracket, Retaining, Wire, Sparkplug	1
7	372060	Coil, Ignition	1
8	372575	Sparkplug	4

SECTION 6

Contents **Page**

Fig. 1 – Cylinder Block Group 6-2
Fig. 2 – Rocker Cover Group 6-4
Fig. 3 – Cylinder Head Group 6-5
Fig. 4 – Front Cover and Oil Pan Group 6-6
Fig. 5 – Camshaft and Valve Group 6-8
Fig. 6 – Piston and Crankshaft Group 6-10
Fig. 7 – Balancer Group 6-11
Fig. 8 – Oil Pump and Pressure Switch Group 6-12
Fig. 9 – Water Pump Group 6-13
Fig. 10 – Intake Manifold Gasket Group . . . 6-14
Fig. 11 – Exhaust Manifold Gasket Group . . 6-16
Fig. 12 – Fan Tensioner and Pump Mount Group 6-17
Fig. 13 – Flywheel Group 6-18
Fig. 14 – Ignition Coil and Spark Plug Group 6-19
Fig. 15 – Starter / Alternator Group 6-20
Fig. 16 – Remote Oil Filter Group 6-21
Fig. 17 – Coolant Group 6-22
Fig. 18 – DSR Coolant Group, LPG Engine 6-23
Fig. 19 – Electrical Group 6-24
Fig. 20 – Fuel Rail Group, Gasoline Engine 6-26
Fig. 21 – Throttle Body Group, Gasoline Engine 6-27
Fig. 22 – Throttle Body Group, LPG Engine 6-28
Fig. 23 – Vaporizer Group, LPG Engine . . . 6-29
Fig. 24 – Electronic Pressure Regulator (EPR) Group, LPG Engine 6-30

Fig. 1 - Cylinder Block Group

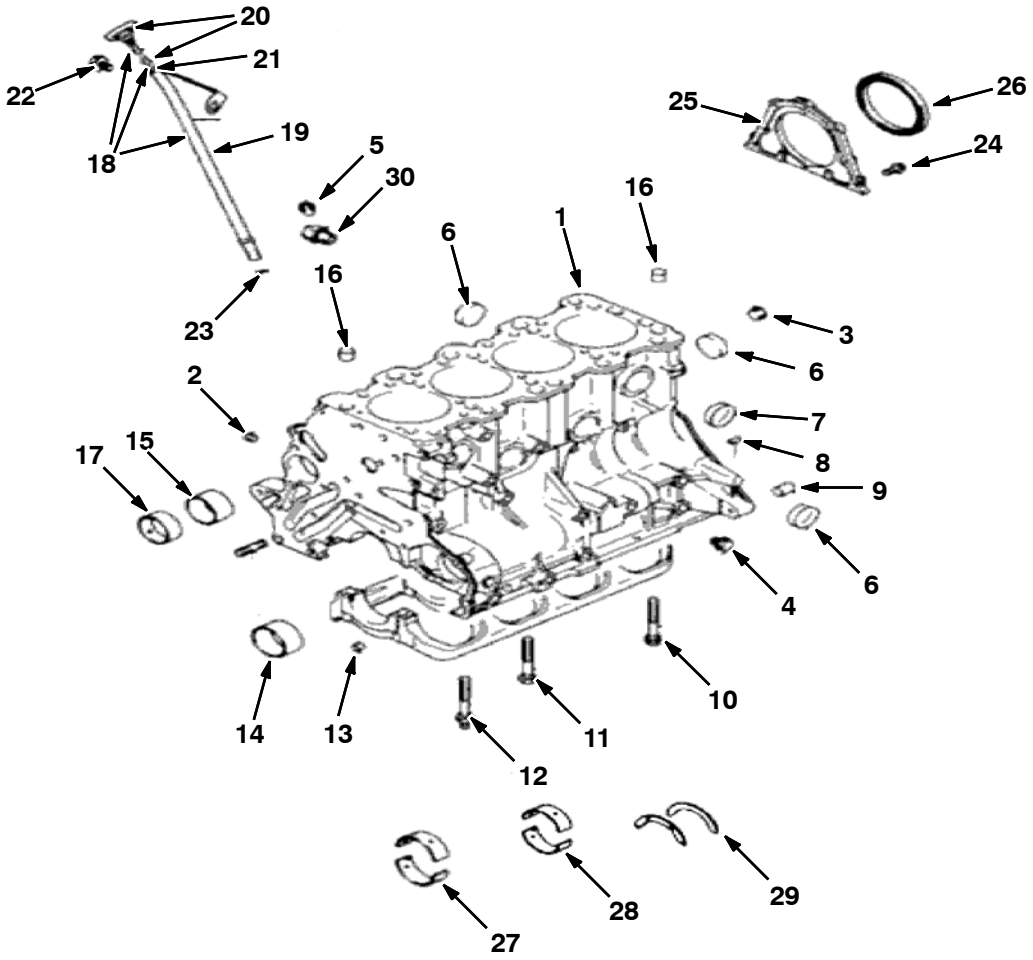

Fig. 1 - Cylinder Block Group

	Ref.	Part No.	Description	Qty.
▽	1	9010419	Block Assy, Cylinder	1
▲	2	9010420	Plug, Taper	2
▲	3	9010421	Plug, Taper	1
▲	4	9010422	Plug	1
▲	5	9010423	Plug, Taper	1
▲	6	9010424	Cap, Seal	7
▲	7	9010425	Cap, Seal	2
▲	8	9010426	Pin, Dowel	2
▲	9	9010427	Bushing, Knock	2
▲	10	9010428	Bolt, Cap, Bearing	2
▲	11	9010429	Bolt, Cap, Bearing	7
▲	12	9010430	Bolt, Cap, Bearing	1
▲	13	9010431	Bushing	2
▲	14	9010432	Bearing, Std, Balancer	1
▲	14	9010433	Bearing, Oversize [1.0]	1
▲	15	9010434	Bearing, Std, Balancer	1
▲	15	9010435	Bearing, Oversize [1.0]	1
▲	16	9010436	Bushing, Knock	2
▲	17	9010458	Bearing, Shaft, Std, Balancer	1
▲	17	9010459	Bearing, Shaft, Balancer [Ovrsz]	1
▽	18	9010439	Dipstick Assy, Guage	1
▲	19	9010440	Dipstick, Guage, Guide	1
▲▽	20	9010437	Dipstick, Rod, Guage	1
▲▲	21	9010438	O-Ring	1
	22	9010441	Bolt, Flange	1
	23	9010442	O-Ring	1
	24	9010444	Bolt, Flange	5
	25	9010445	Seal, Case, Oil, Rear	1
	26	9010446	Seal, Oil	1
	27	9010447	Bearing, Cshft [Green Std 1,2,4,5]	4
	27	9010448	Bearing, Cshft [Yellow Std 1,2,4,5]	4
	27	9010449	Bearing, Cshft[No Color Std 1,2,4,5]	4
	27	9010450	Bearing, Cshft [Lan Std 1,2,4,5]	4
	27	9010451	Bearing, Cshft [Red Std 1,2,4,5]	4
	28	9010452	Bearing, Cshft [Green Std 3]	1
	28	9010453	Bearing, Cshft [Yellow Std 3]	1
	28	9010454	Bearing, Cshft [No Color Std 3]	1
	28	9010455	Bearing, Cshft [Lan Std 3]	1
	28	9010456	Bearing, Cshft [Black Std 3]	1
	29	9010457	Bearing, Thrust, Cshft	1
	30	9010443	Drain, Water, Joint	1

Fig. 2 - Rocker Cover Group

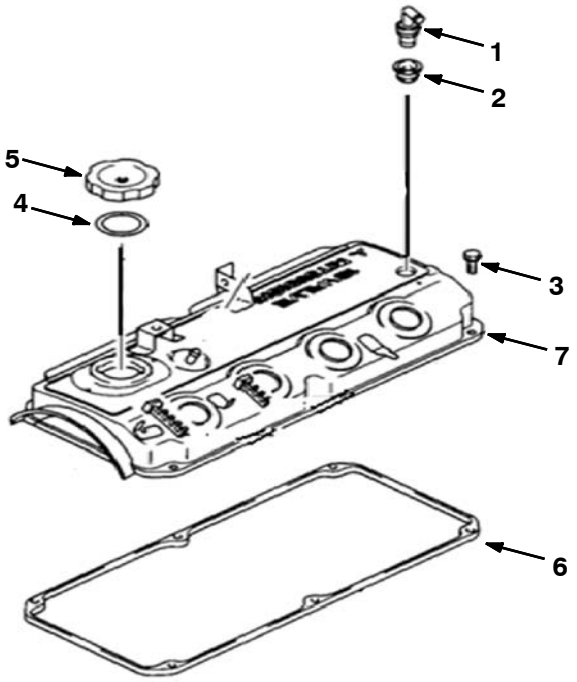

Ref.	Part No.	Description	Qty.
1	9010460	Valve, Pcv	1
2	9010461	Valve, Gasket, Pcv	1
3	9010462	Bolt, Rocker, Cover	6
4	9010463	Gasket, Oil, Filler, Cap	1
5	9010464	Cap, Oil, Filler	1
6	9010465	Gasket, Cover, Rocker	1
7	9010466	Cover Assy, Rocker	1

Fig. 3 - Cylinder Head Group

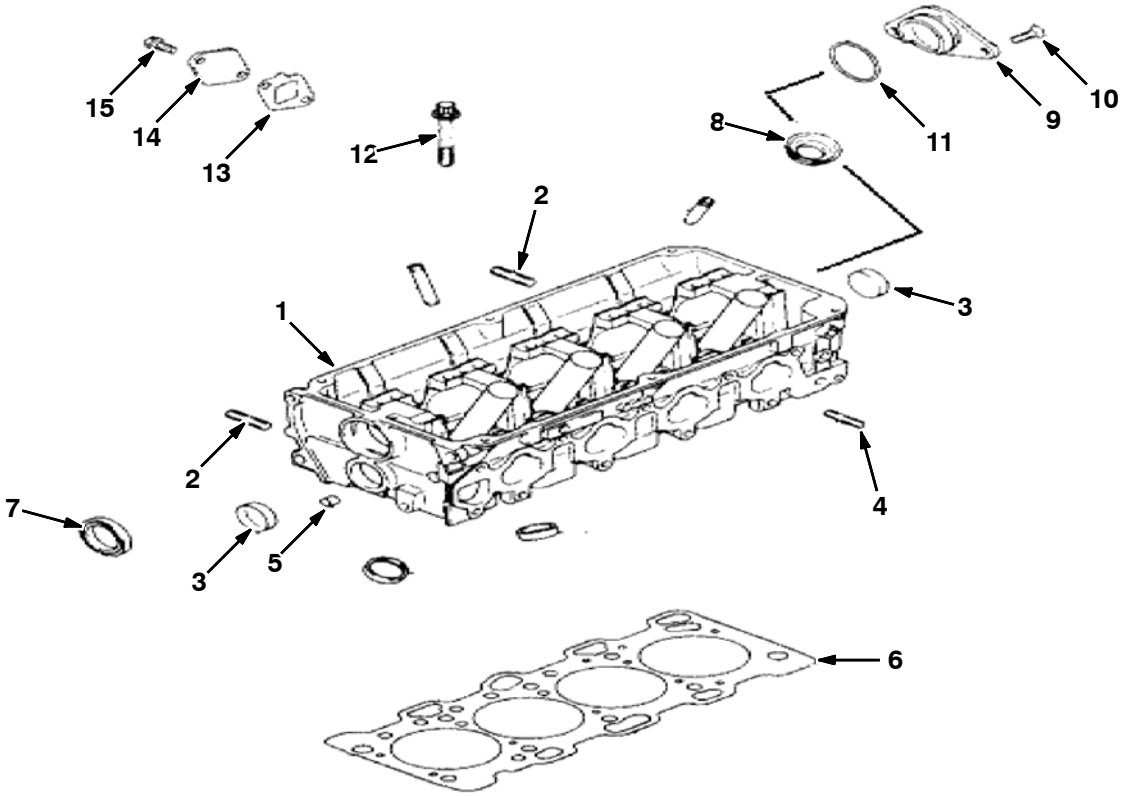

	Ref.	Part No.	Description	Qty.
▽	1	9010467	Head Assy, Cylinder	1
▲	2	9010473	Stud	2
▲	3	9010469	Seal, Cap	2
▲	4	9010470	Stud	3
▲	5	9010431	Bushing	2
	6	9010468	Gasket, Cylinder, Head	1
	7	9010471	Seal, Oil	1
	8	9010479	Seal, Oil	4
	9	9010480	Thurst, Case	1
	10	9010481	Screw	2
	11	9010482	O-Ring	1
	12	9010484	Cylinder Assy, Head, Bolt	10
	13	9010483	Gasket	1
	14	9010485	Cover	1
	15	9010441	Bolt, Flange	2

Fig. 4 - Front Cover and Oil Pan Group

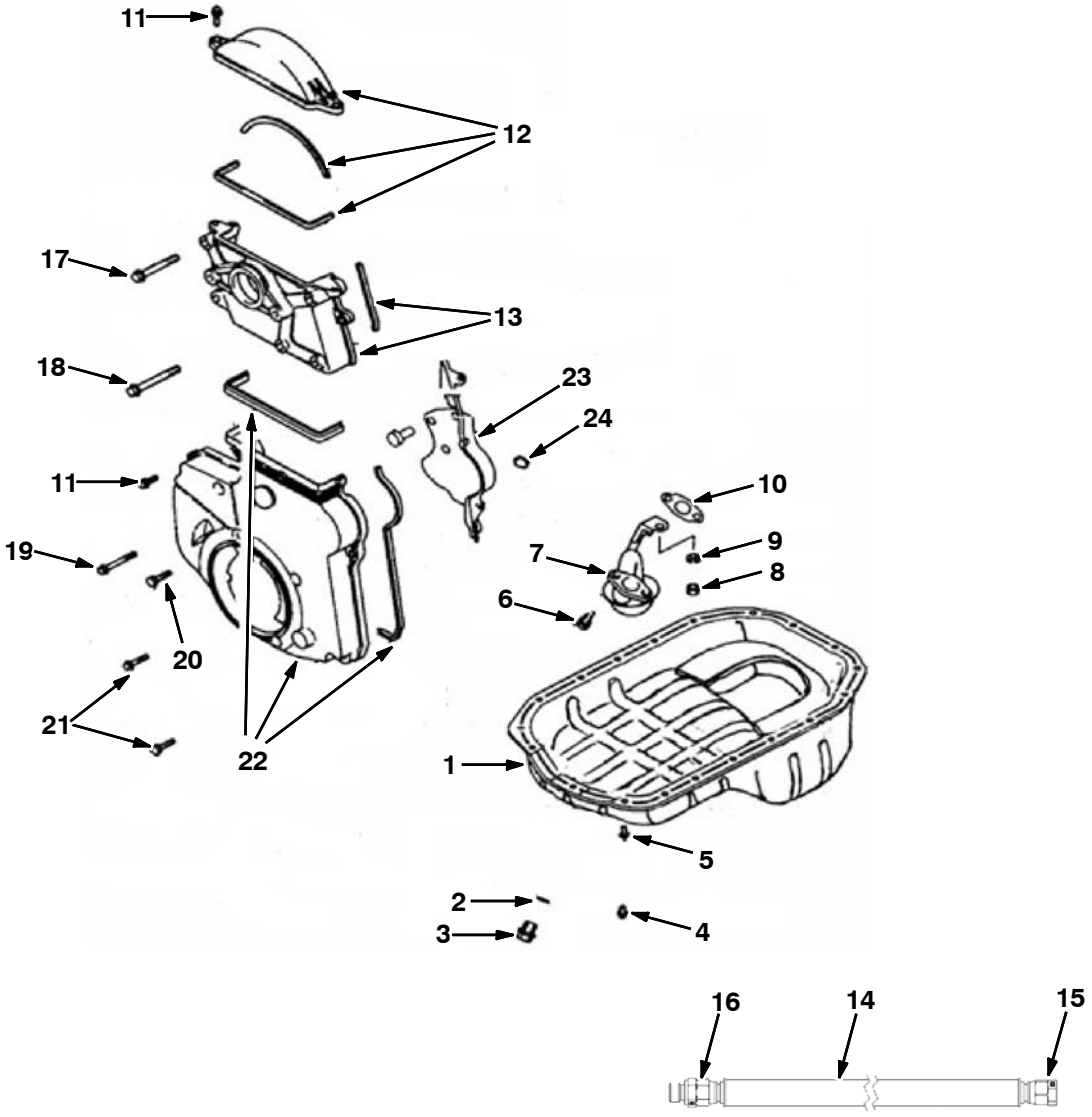

Fig. 4 - Front Cover and Oil Pan Group

	Ref.	Part No.	Description	Qty.
▽	1	9010487	Pan, Oil	1
▲	2	9010488	Gasket, Plug, Drain, Oil	1
▲	3	9010489	Plug, Oil, Drain	1
	4	9010490	Bolt, Flange	17
	5	9010491	Bolt, Flange	2
	6	9010492	Washer, Bolt	2
	7	9010493	Screen, Oil	1
	8	9010494	Nut, Strainer	1
	9	9010495	Washer, Strainer	1
	10	9010496	Gasket, Screen	1
	11	9010497	Bolt, Flange	8
	12	9010498	Cover Assy, Front, Upper [T-Belt]	1
	13	9010502	Bracket Assy, Coil, Ignition	1
	14	9010311	Hose, Drain, Oil [Mit 20/24m]	1
	15	9010312	Plug, Flare, 37deg [Mit]	1
	16	9010313	Fitting, 37deg [Mit]	1
	17	9010503	Bolt, Flange	3
	18	9010504	Bolt, Flange	1
	19	9010505	Bolt, Flange	1
	20	9010506	Bolt	2
	21	9010507	Bolt	2
	22	9010508	Cover, Lower, Front [T-Belt]	1
	23	9010511	Cover, Rear [T-Belt]	1
	24	9010512	Plug, Rubber	1

Fig. 5 - Camshaft and Valve Group

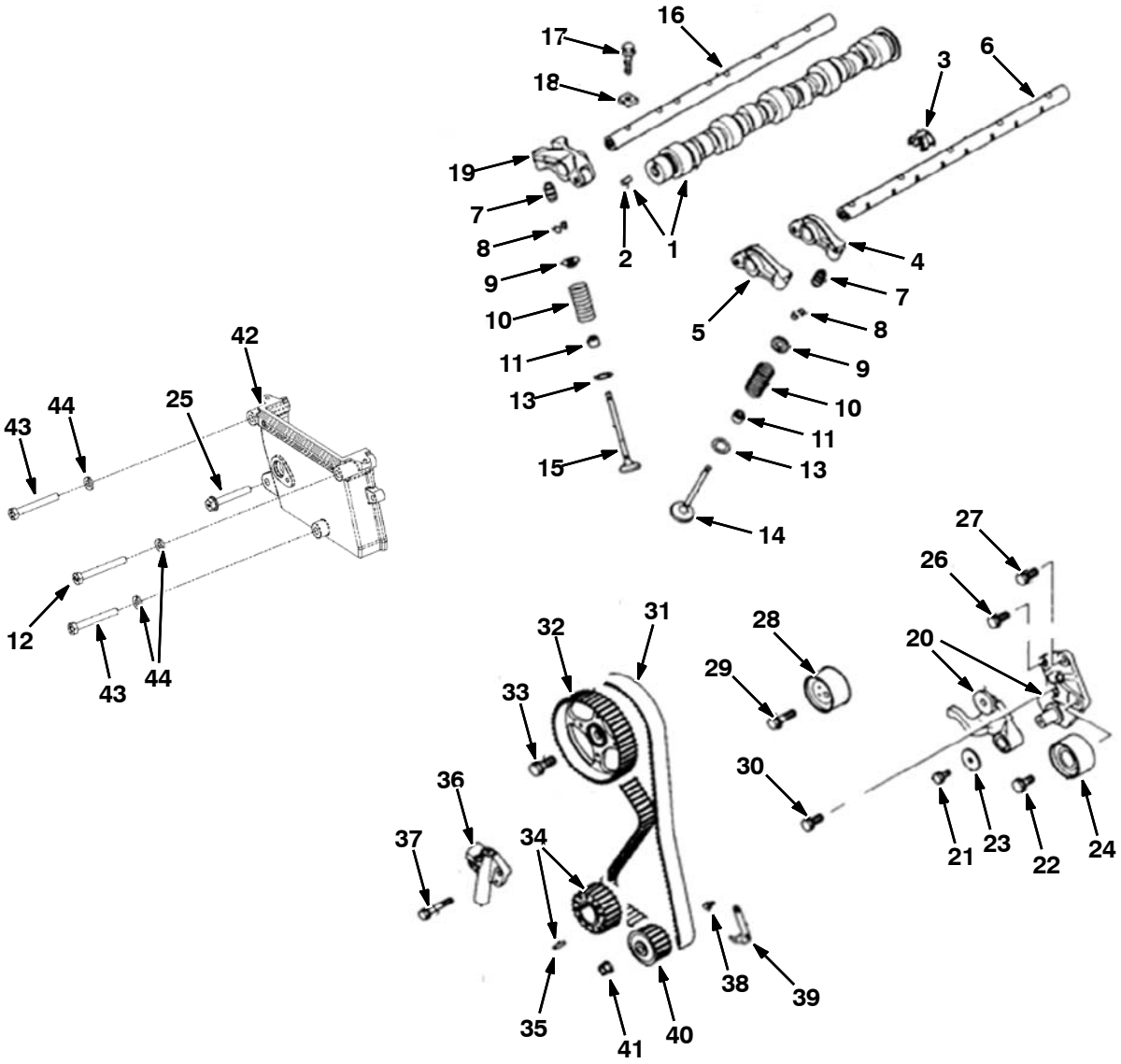

Fig. 5 - Camshaft and Valve Group

	Ref.	Part No.	Description	Qty.
▽	1	9010530	Camshaft Assy	1
▲	2	9010535	Pin, Dowel	1
	3	9010532	Shaft, Spring, Rocker	4
	4	9010533	Arm Assy, Rocker [B]	4
	5	9010534	Arm Assy, Rocker [A]	4
	6	9010531	Shaft, Arm , Rocker	1
	7	9010536	Adjuster Assy, Lash	16
	8	9010537	Valve, Spring, Lock	32
	9	9010538	Valve, Spring, Retainer	16
	10	9010539	Valve, Spring	16
	11	9010540	Valve, Seal, Stem	16
	12	9010254	Bolt, M8-1.25 X 55 Fl Hd [Mit]	1
	13	9010541	Valve, Spring, Seat	16
	14	9010542	Valve, Inlet	8
	15	9010543	Valve, Exhaust	8
	16	9010544	Shaft, Arm, Rocker	1
	17	9010545	Bolt, Flange	13
	18	9010546	Shaft, Cap, Rocker	13
	19	9010547	Arm Assy, Rocker [C]	4
▽	20	9010548	Bracket, Pulley, Tensioner	1
▲	21	9010549	Bolt, Washer	1
▲	22	9010550	Bolt, Washer	1
▲	23	9010551	Washer	1
▲	24	9010552	Pulley, Idler	1
	25	9010253	Bolt, M8-1.25 X 70 Hxhd [Mit]	1
	26	9010554	Bolt, Seal	1
	27	9010555	Bolt, Washer	1
	28	9010556	Pulley, Tensioner	1
	29	9010557	Bolt, Washer	1
	30	9010550	Bolt, Washer	1
	31	9010559	Belt, Timing	1
	32	9010560	Sprocket, Camshaft	1
	33	9010561	Bolt, Flange	1
▽	34	9010562	Sprocket Assy, Cshft	1
▲	35	9010563	Pin, Spring	1
	36	9010564	Tensioner	1
	37	9010565	Bolt, Flange	2
	38	9010491	Bolt, Flange	2
	39	9010567	Bracket, Indicator, Timing	1
	40	9010568	Sprocket, Pump, Oil	1
	41	9010569	Nut	1
	42	9010250	Cover, Timing, Gear [Mit 2.0/2.4l]	1
	43	9010251	Bolt, M8-1.25 X 65 Hxhd [Mit]	2
	44	9010252	Washer, Lock, M8 [Mit]	3

Fig. 6 - Piston and Crankshaft Group

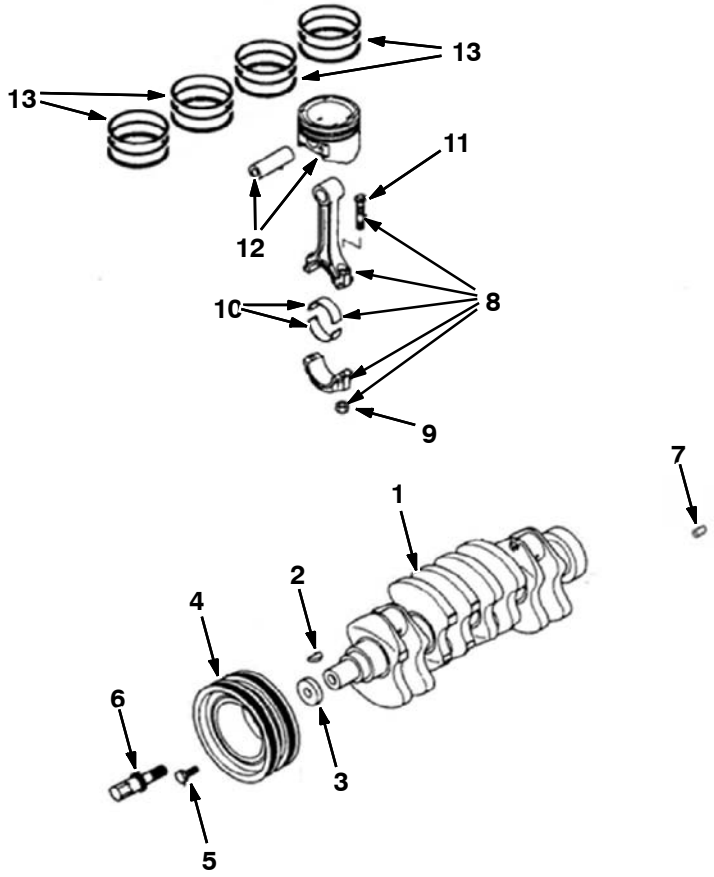

	Ref.	Part No.	Description	Qty.
	1	9010513	Crankshaft Assy	1
	2	9010514	Key	1
	3	9010515	Washer, Special	1
	4	9010516	Pulley Assy, Damper, Torsional	1
	5	9010517	Bolt, Washer	4
	6	9010518	Bolt, Sprocket, Cshft	1
	7	9010519	Pin, Dowel	1
▽	8	9010520	Rod Assy, Connecting	4
▲	9	9010521	Nut	8
▲	10	9010522	Bearing, Rod, Connect [Yellow Std]	4
▲	10	9010523	Bearing, Rod, Connect [No Color Std]	4
▲	10	9010524	Bearing, Rod, Connect [Lan Std]	4
▲	11	9010525	Bolt, Connecting	8
	12	9010526	Piston, Pin [Std A]	4
	12	9010527	Piston, Pin [Std B]	4
	12	9010528	Piston, Pin [Std C]	4
	13	9010529	Piston Set, Ring	1

Fig. 7 - Balancer Group

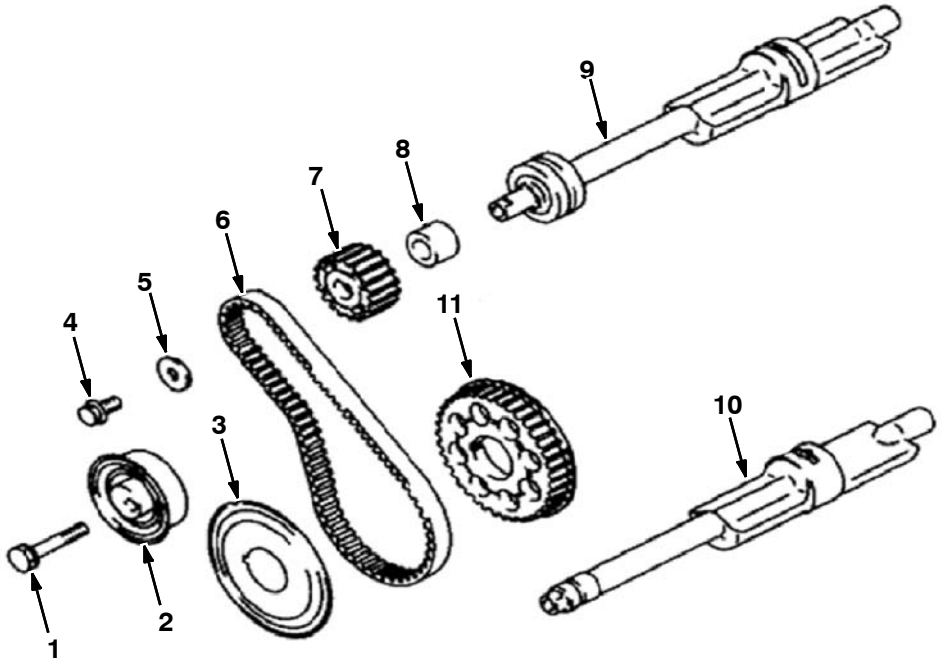

Ref.	Part No.	Description	Qty.
1	9010570	Bolt, Belt, Balancer, Train	1
2	9010571	Tensioner, Timing, Belt	1
3	9010572	Flange, Sprocket, Cshft	1
4	9010600	Bolt, Flange	1
5	9010574	Washer, Belt, Balancer, Train	1
6	9010575	Belt, Timing	1
7	9010576	Sprocket, Shaft, Balancer	1
8	9010577	Spacer, Belt, Balancer, Train	1
9	9010578	Shaft, Right, Balancer	1
10	9010579	Shaft, Left, Balancer	1
11	9010580	Sprocket, Cshft	1

Fig. 8 - Oil Pump and Pressure Switch Group

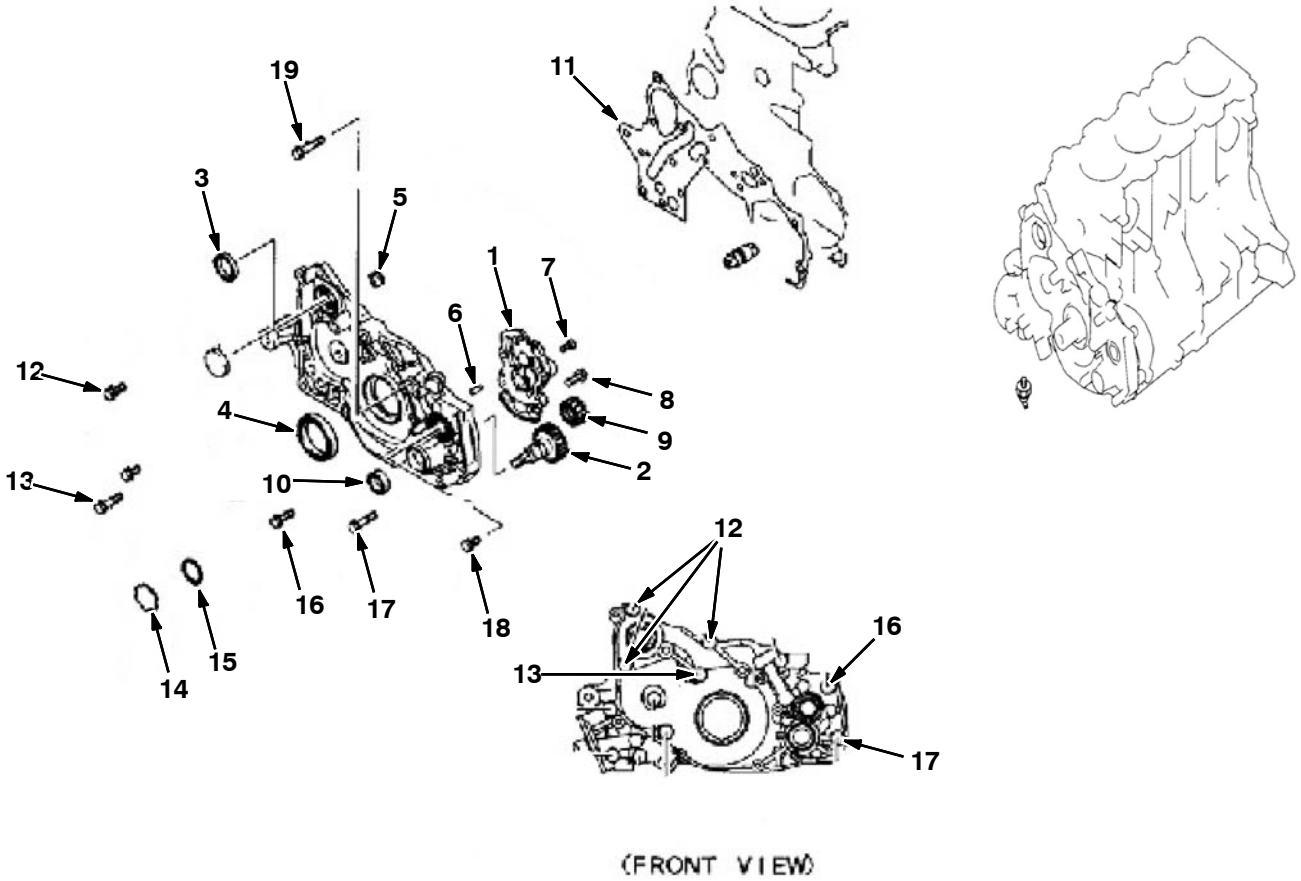

	Ref.	Part No.	Description	Qty.
▽	1	9010582	Pump, Oil	1
▲	2	9010592	Pump, Gear, Drive, Oil	1
▲	3	9010585	Seal, Oil	1
▲	4	9010586	Seal, Oil	1
▲	5	9010587	Plug, Tapper	1
▲	6	9010426	Pin, Dowel	2
▲	7	9010589	Screw	1
▲	8	9010590	Bolt, Flange	4
▲	9	9010591	Pump, Gear, Oil	1
▲	10	9010601	Seal, Oil	1
	11	9010593	Gasket, Case, Front	1
	12	9010594	Bolt, Washer	3
	13	9010595	Bolt, Washer	1
	14	9010596	Plug, Cap	1
	15	9010597	O-Ring	1
	16	9010598	Bolt, Flange	1
	17	9010599	Bolt, Flange	1
	18	9010600	Bolt, Flange	1
	19	9010583	Bolt, Flange	1

Fig. 9 - Water Pump Group

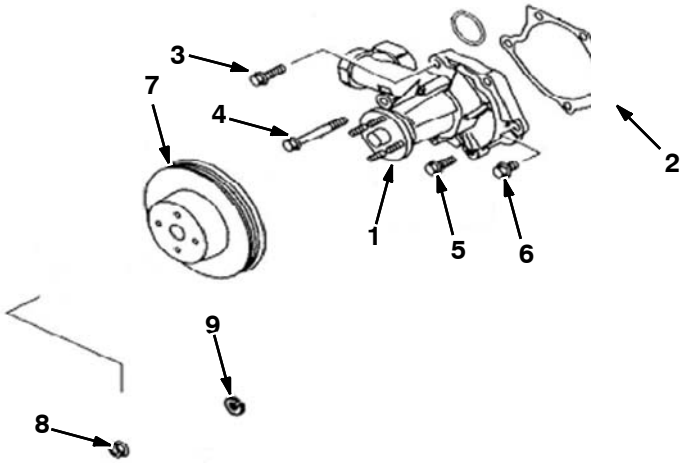

Ref.	Part No.	Description	Qty.
1	9010602	Pump, Water	1
2	9010603	Gasket, Pump, Water	1
3	9010604	Bolt, Flange	1
4	9010503	Bolt, Flange	1
5	9010606	Bolt, Flange	2
6	9010607	Bolt, Flange	1
7	9010612	Pulley, Pump, Water	1
8	9010609	Nut, Flange	4
9	9010610	Washer, Spring	4

Fig. 10 - Intake Manifold Gasket Group

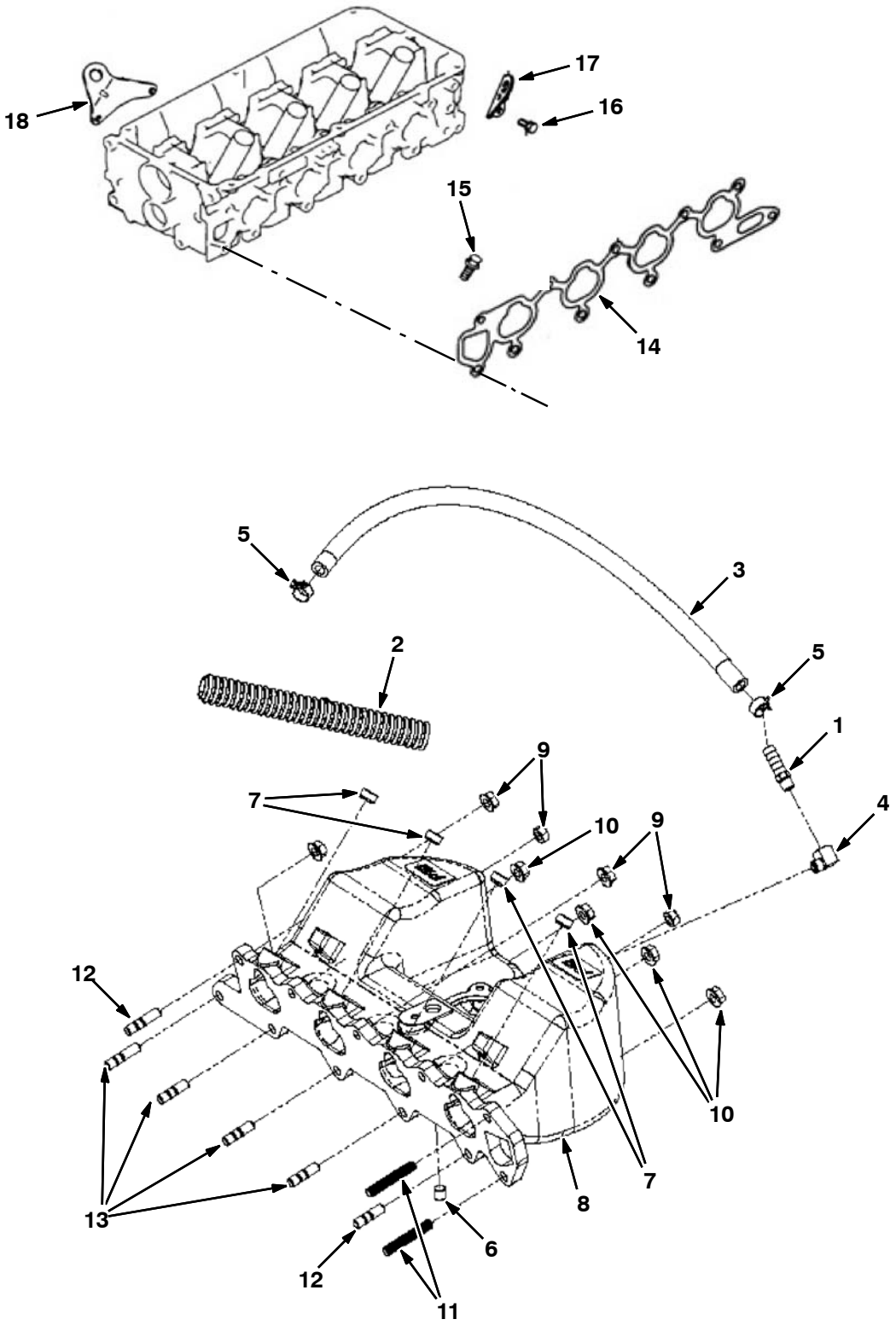

Fig. 10 - Intake Manifold Gasket Group

Ref.	Part No.	Description	Qty.
1	9010382	Fitting, 1/8 Mpt X 3/8 Hb [Mit]	1
2	9010281	Loom, Convoluted, Split 5/8 [Mit]	17”
3	385001	Hose, Fuel, .38d, Rbr[16”L]	20”
4	9010383	Elbow, 1/8m X 1/8f, 90 [Mit]	1
5	9010282	Clamp, 3/8id [Mit Olive Green]	2
6	9010283	Plug, 1/8 Npt, Brs, Skt Hd [Mit]	1
7	9010284	Plug, Injector [Mit]	4
8	9010285	Manifold, Intake [Mit 20/24m Tilt]	1
9	9010286	Nut, M8-1.25 [Mit]	2
10	385015	Nut, Flng, M8	7
11	9010287	Stud, M8-1.25 X 50 Full Thrd [Mit]	2
12	9010288	Stud, M8-1.25 X 35 [Mit Double End]	2
13	9010384	Stud, M8-1.25 X 30 [Mit Double End]	4
14	9010613	Gasket, Manifold, Intake	1
15	9010606	Bolt, Flange	2
16	9010615	Bolt, Manifold, Inlet	1
17	9010617	Hanger, Engine	1
18	9010618	Hanger, Engine	1

Fig. 11 - Exhaust Manifold Gasket Group

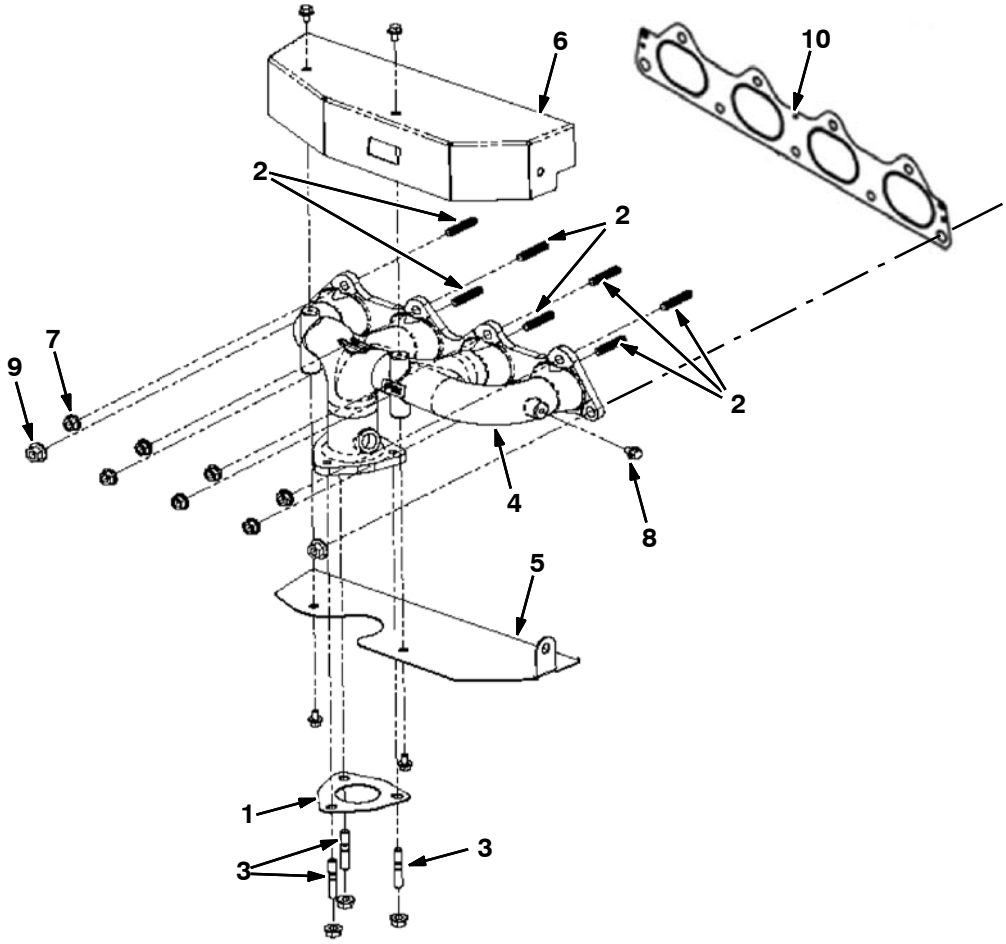

Ref.	Part No.	Description	Qty.
1	9010296	Gasket, Manifold, Exh [Mit]	1
2	9010297	Stud, M8-1.25 X 40 [Mit]	7
3	372020	Stud, Manifold, Intake, M8 X 28	3
4	9010298	Manifold, Exhaust [Mit 2.0/2.4l]	1
5	9010302	Shield, Heat, Lower [Mit 20/24m]	1
6	9010303	Shield, Heat, Upper [Mit 20/24m]	1
7	385015	Nut, Flng, M8	10
8	9010262	Bolt, M6-1.0 X 10 Fl Hd [Mit]	5
9	9010239	Nut, M10-1.25 Flg [Mit]	2
10	9010619	Gasket, Manifold, Exhaust	1

Fig. 12 - Fan Tensioner and Pump Mount Group

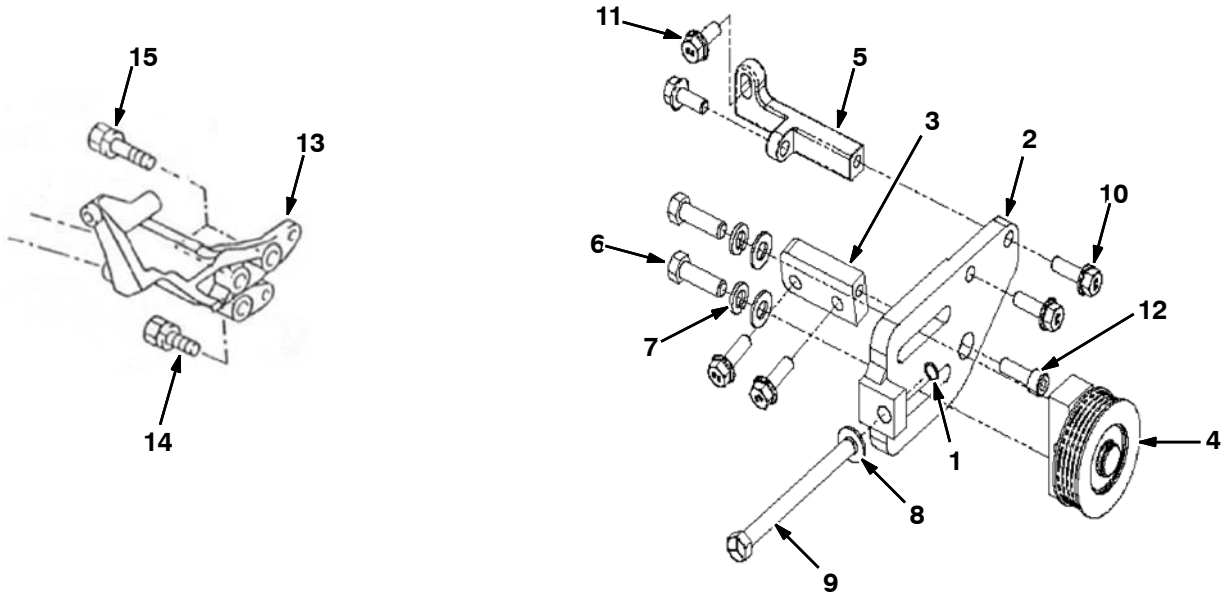

Ref.	Part No.	Description	Qty.
1	371562	Ring, Retaining	1
2	9010222	Plate, Tensioner, Adj [Mit 2.0/2.4l]	1
3	9010223	Bar, Tensioner, Mtg [Mit 2.0/2.4l]	1
4	9010224	Pulley, Tensioner, Assy[Mit2.0/2.4l]	1
5	9010225	Bracket, Tensioner, [Mit 2.0/2.4l]	1
6	9010226	Bolt, 3/8-16 X 1 1/4 Hxhd [Mit]	2
7	371509	Washer, Lock, 0.38	2
8	9010227	Washer, Flat 3/8, Sae	3
9	9010228	Bolt, 3/8-16 X 4.5 [Mit]	1
10	9010229	Bolt, M8-1.25 X 25 [Mit]	4
11	9010230	Bolt, M8-1.25 X 20 Fl Hd [Mit]	2
12	9010231	Bolt, M8-1.25 X 25 Soc Hd [Mit]	1
13	9010623	Bracket, Pump, Mtg	1
14	9010624	Bolt, Washer	1
15	9010625	Bolt, Washer	2

Fig. 13 - Flywheel Group

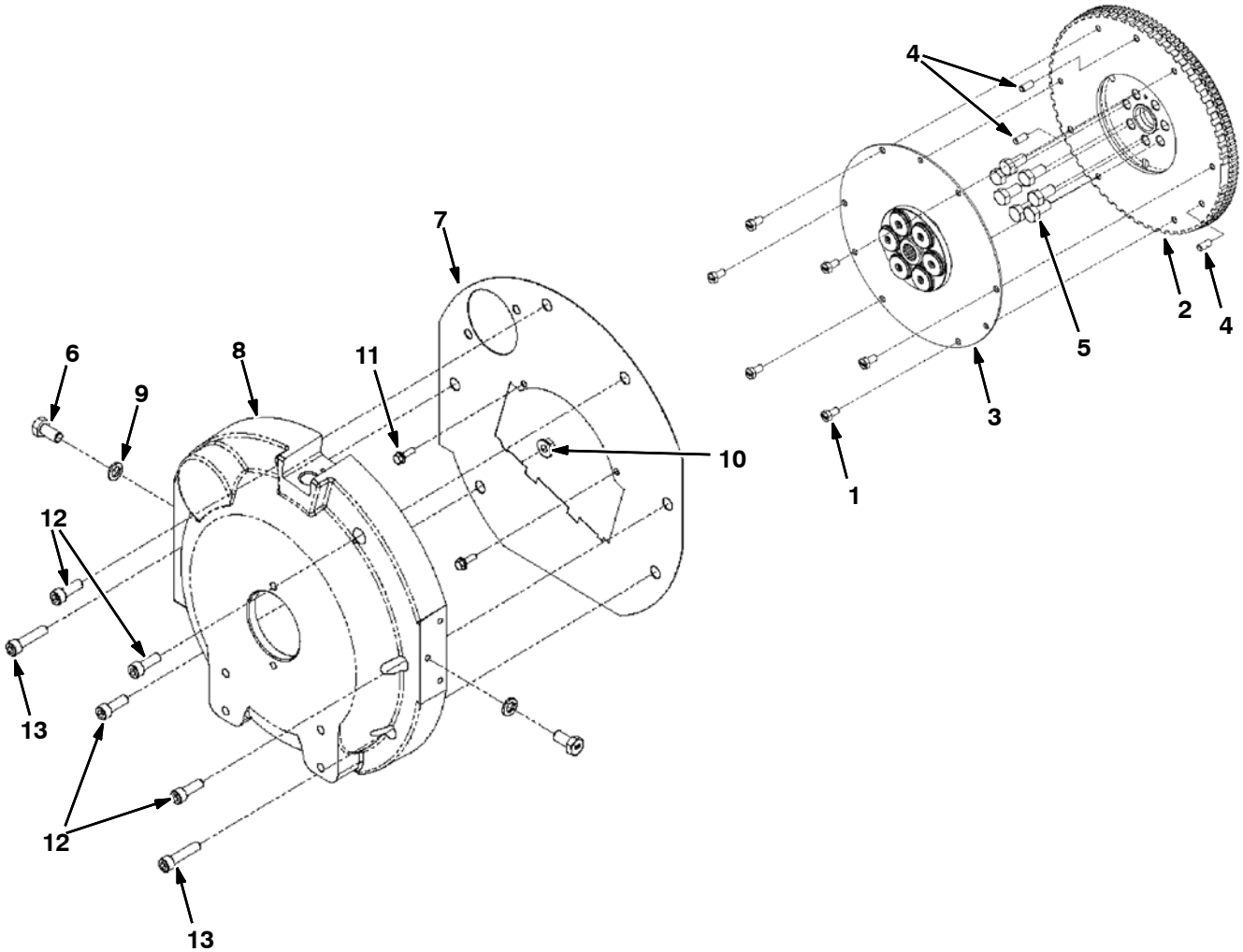

Ref.	Part No.	Description	Qty.
1	9010232	Bolt, M8-1.25 X 15, Hx Hd [Mit]	6
2	9010233	Flywheel, Flatface [Mit 20/24m]	1
3	9010234	Coupling, Flywheel [Mit20/24m]	1
4	9010235	Pin, Flywheel [Mit 20/20m]	3
5	9010236	Bolt, Flywheel [Mit 20/24m]	7
6	9010359	Bolt, M12-1.75 X 25, Hex Hd [Mit]	2
7	9010237	Cover, Dust [Mit 2.0l]	1
8	9010238	Housing, Flywheel [Mit 2.0l]	1
9	9010360	Washer, Lock, M12 [Mit]	2
10	9010239	Nut, M10-1.25 Flg [Mit]	1
11	9010240	Bolt, M6-1.0 X 20 Fl Hd [Mit]	2
12	9010241	Bolt, M10-1.25 X 30 Soc Hd [Mit]	4
13	9010242	Bolt, M10-1.25 X 45 Soc Hd [Mit]	2

Fig. 14 - Ignition Coil and Spark Plug Group

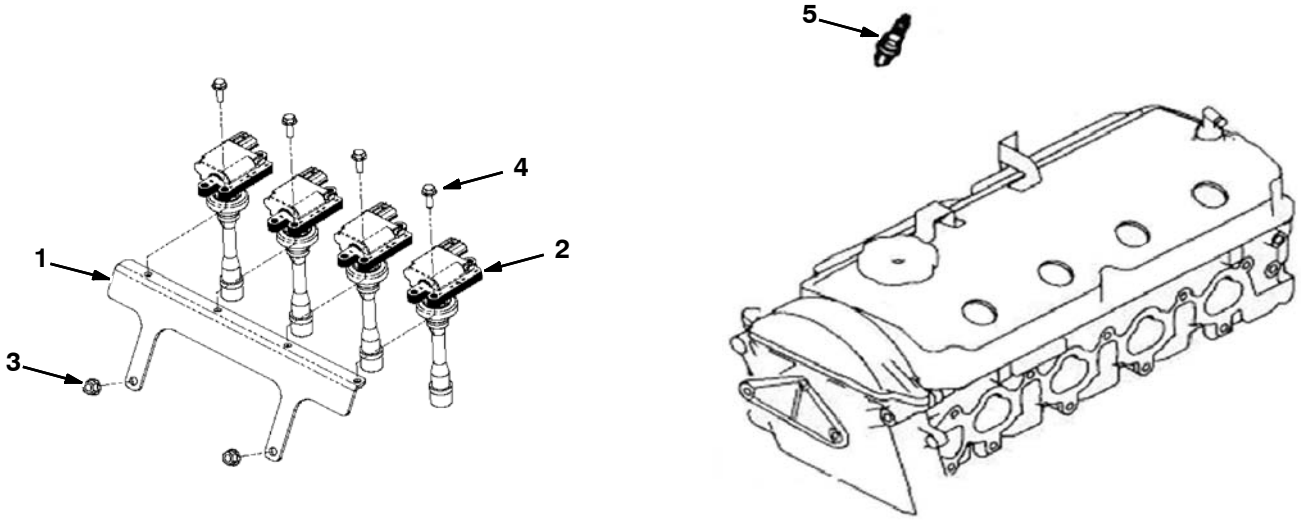

Ref.	Part No.	Description	Qty.
1	9010243	Bracket, Coil [Mit 2.0/2.4l]	1
2	9010244	Coil, Ignition [Mit 2.0/2.4l]	4
3	385015	Nut, Flng, M8	2
4	9010240	Bolt, M6-1.0 X 20 Fl Hd [Mit]	4
5	9010622	Plug, Spark	4

Fig. 15 - Starter / Alternator Group

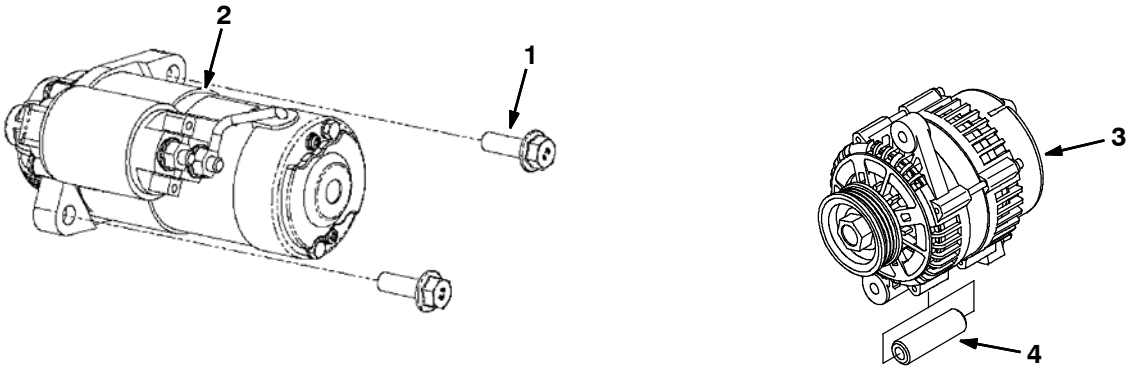

Ref.	Part No.	Description	Qty.
1	9010245	Bolt, M10-1.50 X 30 [Mit]	2
2	9010246	Starter, Motor [Mit 2.0/2.4l]	1
3	9010217	Alternator, 7si [Mit Df Sur-Belt]	1
4	9010219	Spacer, Alternator [Mit 2.0/2.4l]	1

Fig. 16 - Remote Oil Filter Group

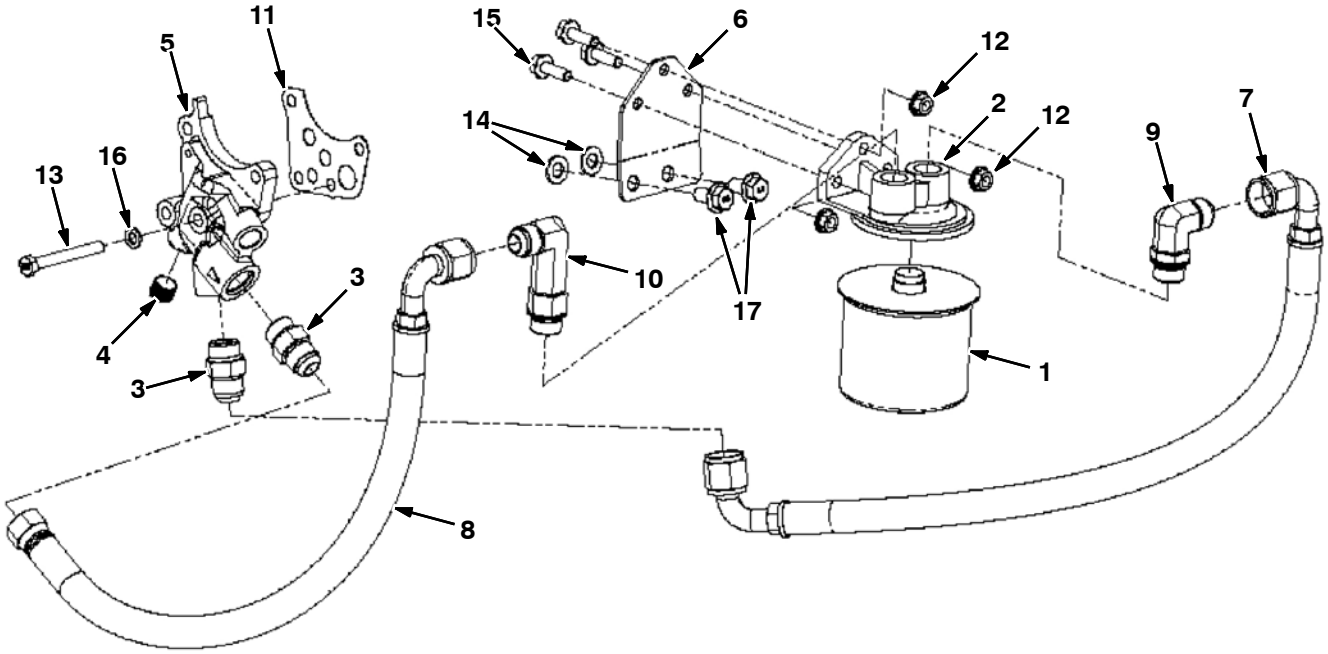

Ref.	Part No.	Description	Qty.
1	9010627	Filter, Oil (Mits)	1
2	371503	Mount, Fltr, Remote	1
3	9010371	Fitting, Str, 10-10 Orb, 37fi [Mit]	4
4	9010372	Plug, 3/8npt X 5/16, Brs [Mit]	1
5	9010373	Adapter, Filter, Oil, Remote [Mit]	1
6	9010374	Bracket, Filter, Oil, Remote [Mit]	1
7	9010375	Hose, 90x90,Filter, Oil, Remote[Mit]	1
8	9010376	Hose, 90xstr,Flter, Oil, Remote[Mit]	1
9	9010628	Elbow	1
10	9010629	Elbow	1
11	9010377	Gasket, Oil, Adapter [Mit 2.0/2.4]	1
12	385015	Nut, Flng, M8	3
13	9010253	Bolt, M8-1.25 X 70 Hxhd [Mit]	1
14	9010630	Washer	2
15	9010229	Bolt, M8-1.25 X 25 [Mit]	3
16	9010380	Washer, Lock, M8 [Mit]	1
17	9010631	Bolt	2

Fig. 17 - Coolant Group

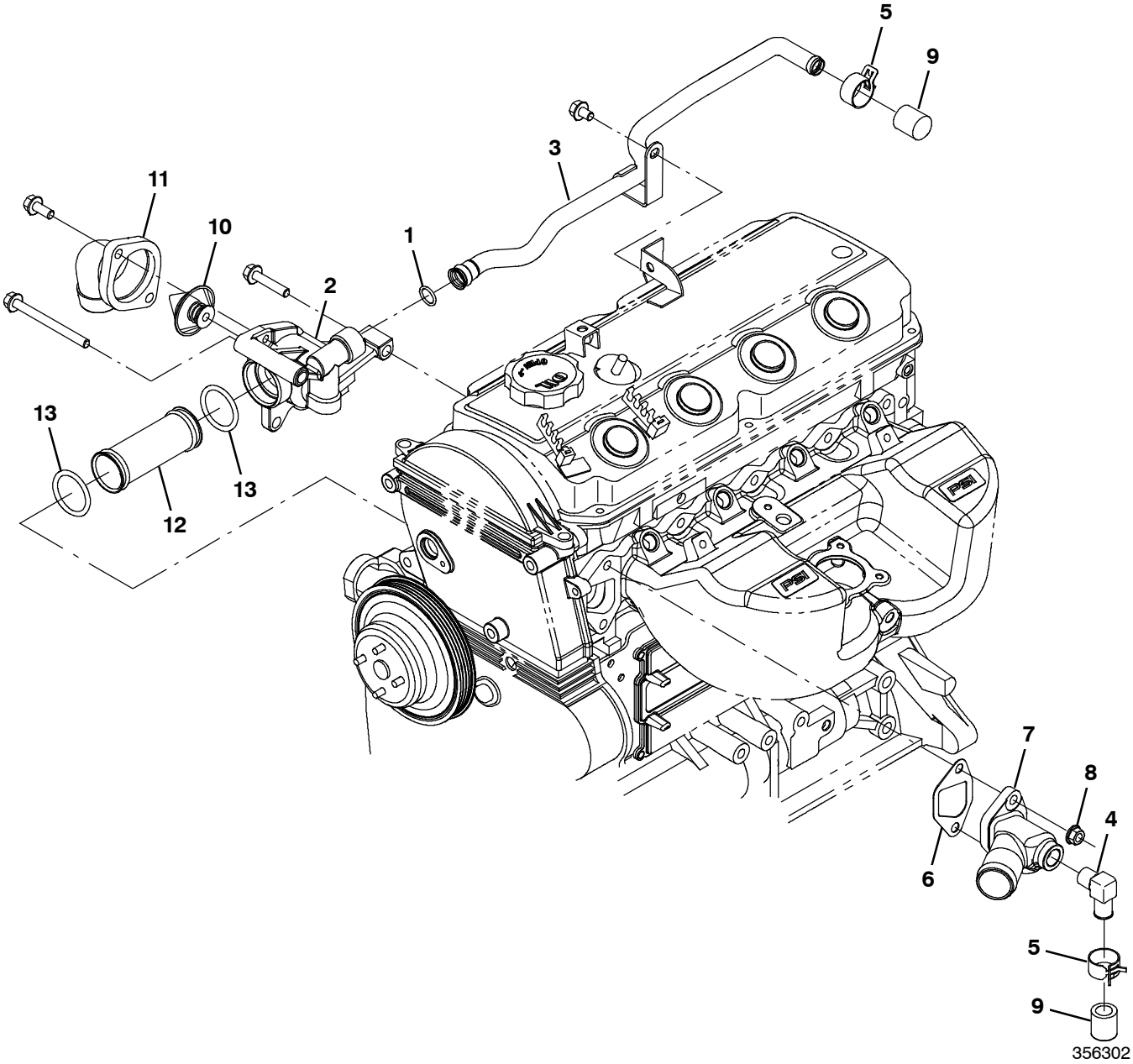

Ref.	Part No.	Description	Qty.
1	9010289	O-Ring [Mit 208 Buna-N]	1
2	9010290	Housing, T-Stat, 2 Holes [Mit]	1
3	9010291	Tube, Water, Line [Mit]	1
4	385011	Fitting, E90	1
5	384979	Clamp, Hose, Spring, 0.62d	2
6	9010632	Gasket, Outlet	1
7	9010294	Outlet, Water, W/Plug [Mit 2.0/2.4l]	1
8	385015	Nut, Flng, M8	2
9	9010295	Cap, Rubber, 5/8id [Mit 2.0/2.4l]	2
10	9010633	Thermostat	1
11	9010215	Housing, Thermostat	1
12	9010910	Tube, Pump, Water	1
13	9013530	Seal, Tube, Water [Mit 2.0l]	2

Fig. 18 - DSR Coolant Group, LPG Engine

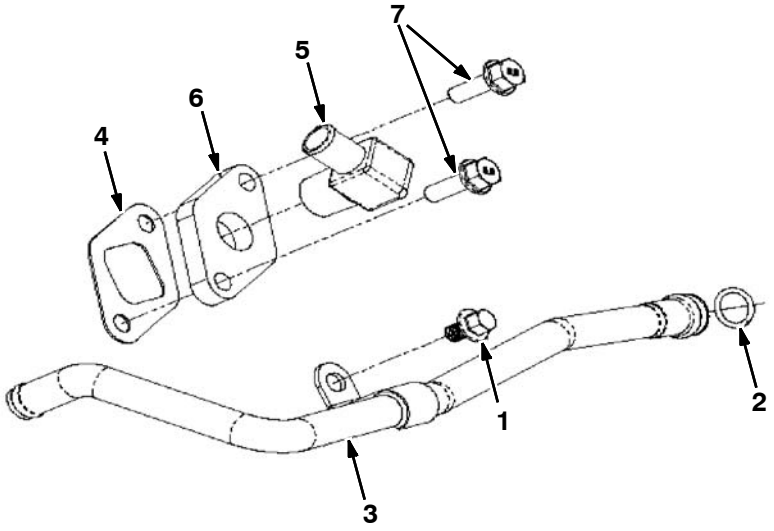

Ref.	Part No.	Description	Qty.
1	9010305	Bolt, M8-1.25 X 12 [Mit]	1
2	9010289	O-Ring [Mit 208 Buna-N]	1
3	9010306	Tube, Cooling, Line [Mit]	1
4	9010307	Gasket, Water Supply [Mit 2.0/2.4l]	1
5	9010308	Fitting, 1/2 Mpt X 5/8bh 90deg [Mit]	1
6	9010309	Plate, Water, Outlet [Mit Bypass]	1
7	9010310	Bolt, M8-1.25 X 25 Flg Hd [Mit]	2

Fig. 19 - Electrical Group

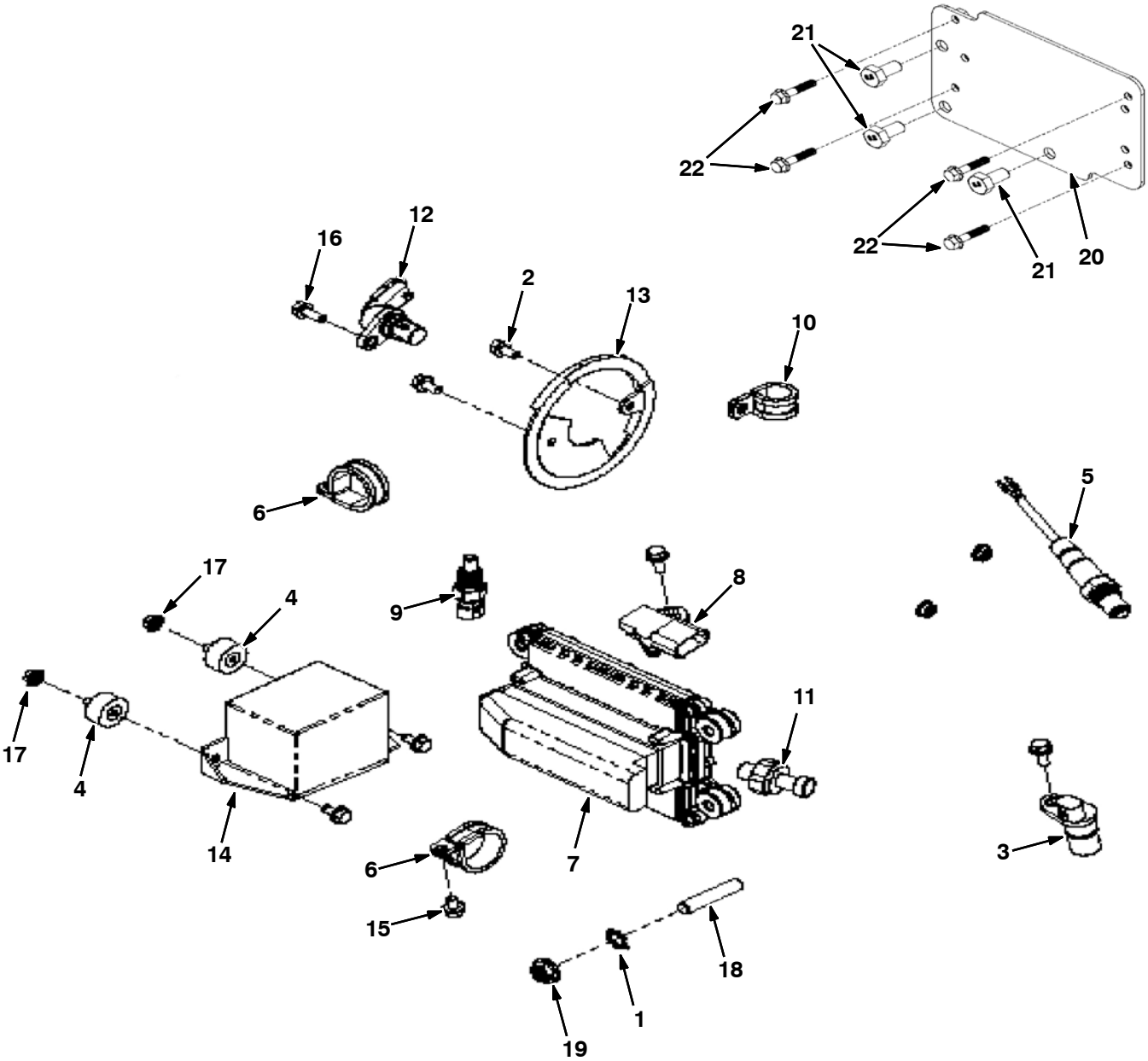

Fig. 19 - Electrical Group

Ref.	Part No.	Description	Qty.
1	9010255	Washer, Star, M10 [Mit]	1
2	9010256	Bolt, M6-1.0 X 12 Fl Hd Pl [Mit]	2
3	372492	Sensor, Spd, Timing Wheel [3.0l]	1
4	9008805	Isolator	2
5	1028558	Sensor, Exhaust, Tailpipe	1
6	9010257	Clamp, 1/4 Hole [Mit #20]	2
7	1071397	Module, Ecu, Gas [Mit 2.0l 2013]	1
7	1071398	Module, Ecu, Lpg [Mit 2.0l 2013]	1
8	372493	Sensor [Tmap]	1
9	372891	Sensor, Temp, Coolant	1
10	9010258	Clamp, 0.75d [Mit]	1
11	9010259	Sender, Oil, Press [Mit] (3 Prong)	1
12	9010260	Sensor, Camshaft [Mit]	1
13	9010261	Cam, Sensor, Wheel [Mit 2.0/2.4l]	1
14	1071653	Harness, Wire, Eng, Gas [Mit, 2.0l]	1
14	1071654	Harness, Wire, Eng, Lpg [Mit, 2.Ol]	1
15	9010262	Bolt, M6-1.0 X 10 Fl Hd [Mit]	3
16	9010263	Bolt, M6-1.0 X 16 Fl Hd [Mit]	3
17	9010264	Nut, M6-1.0 Flange [Mit]	4
18	9010366	Stud, M10-1.25 X 50, Full Thrd [Mit]	1
19	9010367	Nut, M10-1.25, Hx Flg [Mit]	1
20	9010247	Plate, Mtg, Ecu [Mit 2.0/2.4l]	1
21	9010248	Bolt, M10-1.25 X 20 Hxhd [Mit]	3
22	9010249	Bolt, M6-1.0 X 30 Fl Hd [Mit]	4

Fig. 20 - Fuel Rail Group, Gasoline Engine

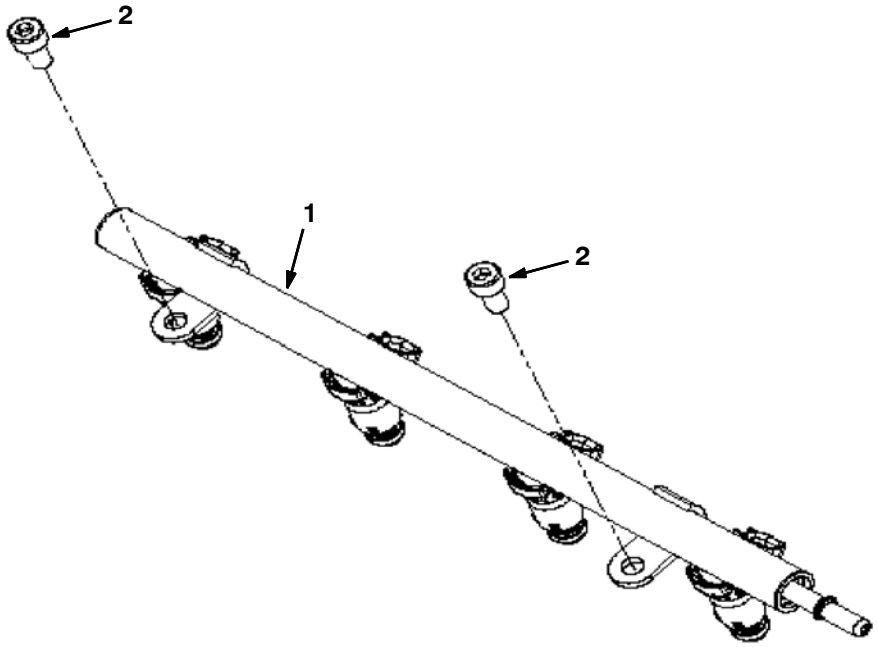

Ref.	Part No.	Description	Qty.
1	9010306	Tube, Cooling, Line [Mit]	1
2	9010327	Bolt, M8-1.25 X 16, Soc Hd [Mit]	2

Fig. 21 - Throttle Body Group, Gasoline Engine

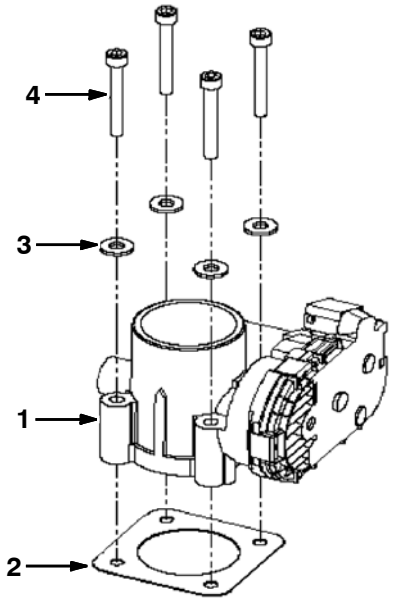

Ref.	Part No.	Description	Qty.
1	9010266	Actuator [Mit , Bosch]	1
2	9010268	Gasket, Throttle [Mit 40mm]	1
3	9010330	Washer, 1/4 Flat [Mit]	4
4	9010331	Bolt, M6-1.0 X 45, Skt Hd [Mit]	4

Fig. 22 - Throttle Body Group, LPG Engine

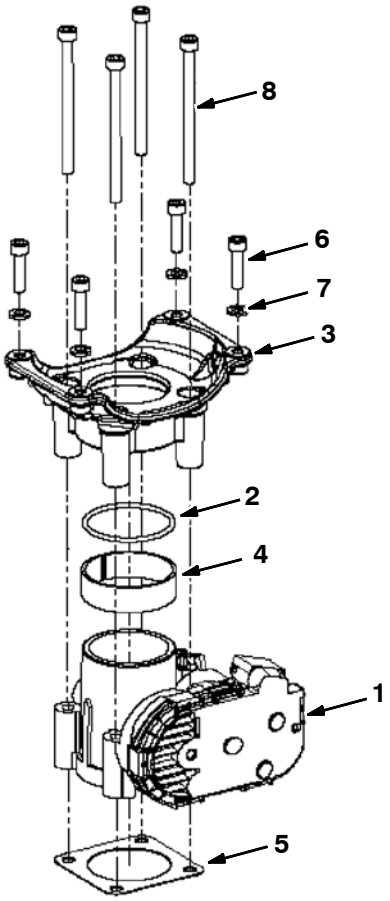

Ref.	Part No.	Description	Qty.
1	9010266	Actuator [Mit , Bosch]	1
2	1037311	Seal, Org, Lpg, Mixer [Gm 2007/Mit]	1
3	9006619	Adapter [E100 Mixer Gm1.6l 2010/Mit]	1
4	9010267	Spacer, Ring, Throttle [Mit 40mm]	1
5	9010268	Gasket, Throttle [Mit 40mm]	1
6	9010269	Bolt, M6-1.0 X 25 Soc Hd [Mit]	4
7	9010270	Washer, Lock, M6 [Mit]	4
8	9010271	Bolt, M6-1.0 X 85 Soc Hd [Mit]	4

Fig. 23 - Vaporizer Group, LPG Engine

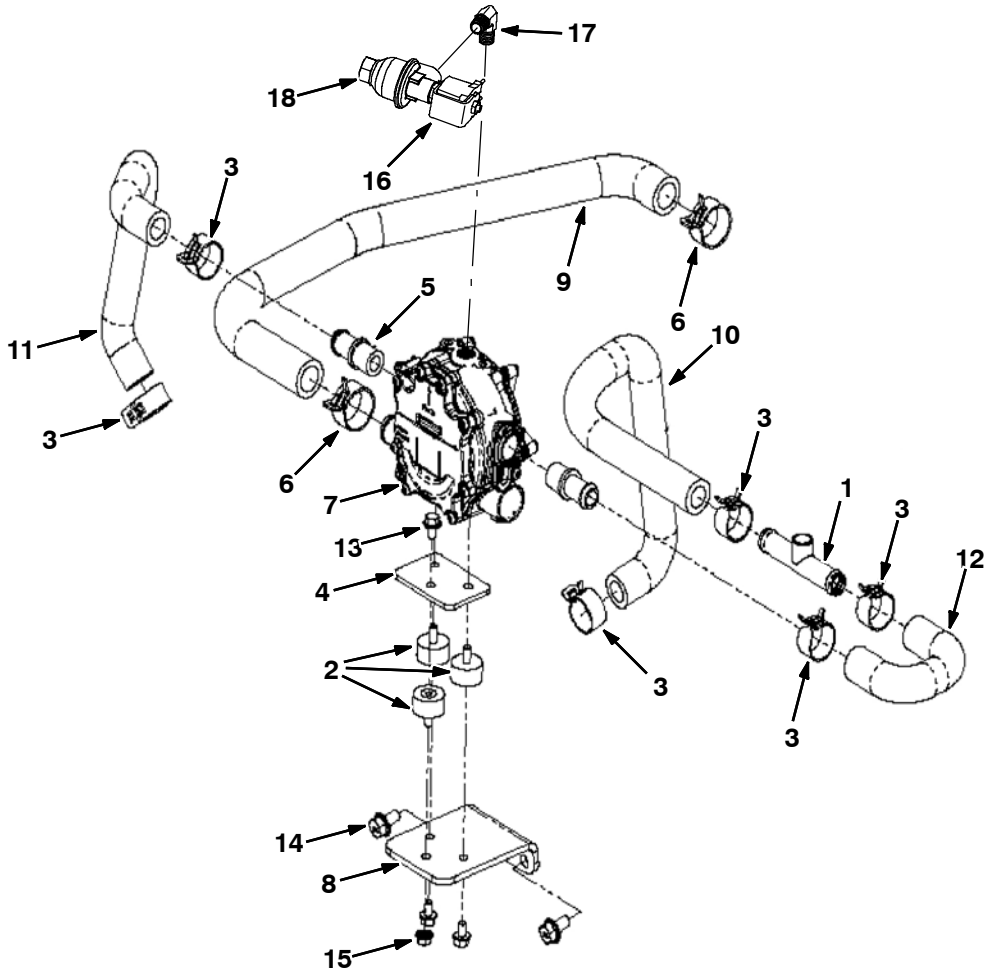

	Ref.	Part No.	Description	Qty.
	1	9010272	Hose Assy, Upper, Tap [Mit]	1
	2	9008805	Isolator	3
	3	384979	Clamp, Hose, Spring, 0.62d	6
	4	9008804	Plate, Mtg [Epr]	1
	5	9010273	Fitting, 1/2 X 5/8 Hose,Plastic[Mit]	2
	6	9010274	Clamp, Tension [Mit #29]	2
▽	7	9008193	Regulator [Gm3.0l 2010/Mit]	1
▲		9010626	Repair Kit, Vaporizer	1
	8	9010275	Bracket, Vaporizer [Mit 20/24m Tilt]	1
	9	9010276	Hose, Fuel, Molded [Mit 20/24m]	1
	10	9010277	Hose, Coolant, Molded [Mit 20/24m]	1
	11	9010278	Hose, Coolant, Molded [Mit 20/24m]	1
	12	9010279	Hose, Coolant, Molded [Mit 20/24m]	1
	13	9010262	Bolt, M6-1.0 X 10 Fl Hd [Mit]	3
	14	9010280	Bolt, M8-1.25 X 16 Fl Hd [Mit]	2
	15	9010264	Nut, M6-1.0 Flange [Mit]	1
	16	9006620	Lock-Off, 12v, Lpg [Mit]	1
	17	9010317	Fitting, 1/4mpt X 1/4mpt, 90deg[Mit]	1
	18	9007380	Filter Kit, Fuelock,Lpg[Gm1.6l 2010]	1

Fig. 24 - Electronic Pressure Regulator (EPR) Group, LPG Engine

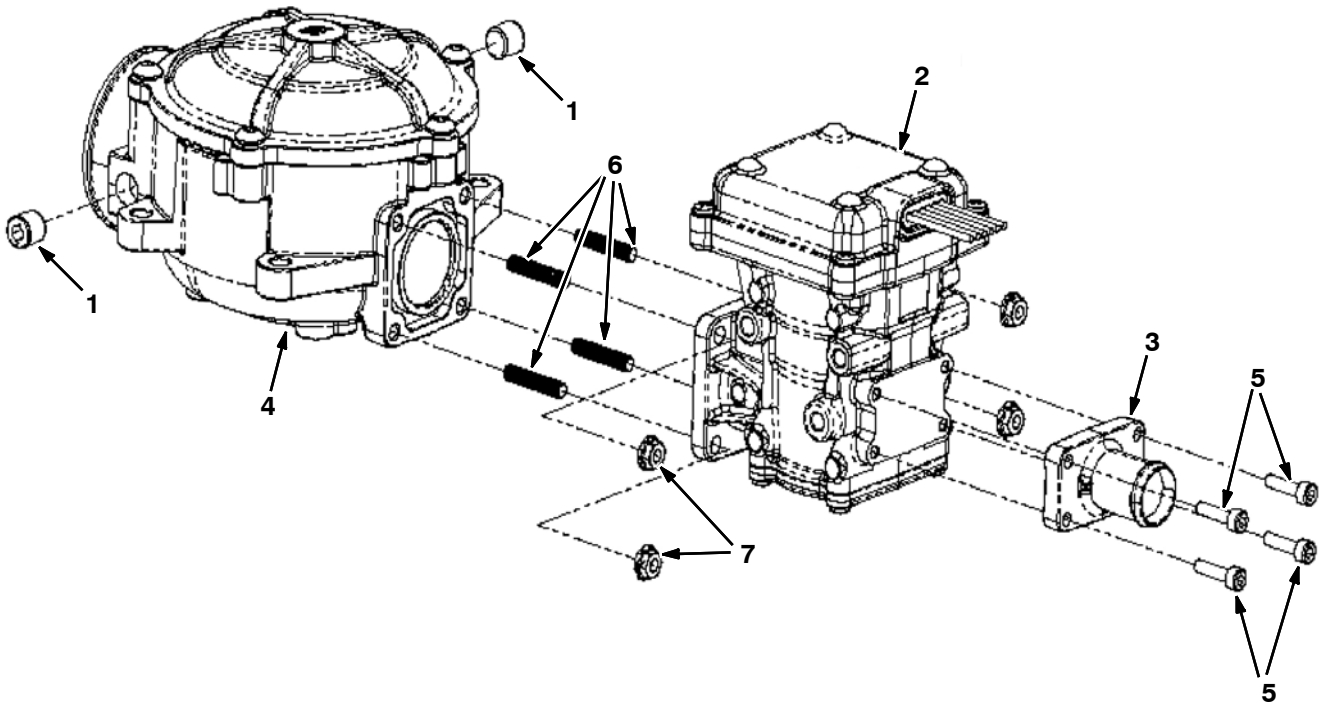

	Ref.	Part No.	Description	Qty.
	1	9010314	Plug, 1/8npt, Brs [Mit]	2
	2	9008806	Regulator, Press, Electronic [Epr]	1
	3	9008807	Fitting, Barb, 3/4” [Epr]	1
▽	4	9006618	Adapter [E100 Mixer Gm1.6l 2010/Mit]	1
▲		9010634	Repair Kit, Mixer	1
	5	9008808	Screw, Soc, M4 X 0.70 X 16	4
	6	9007424	Stud, M05-0.8	4
	7	9007423	Nut, Flng, M05-0.8	4

SECTION 7

CONTENTS **PAGE**

PART NUMBER TO PAGE NUMBER CROSS REFERENCE LIST 7-2
PART DESCRIPTION TO PAGE NUMBER CROSS REFERENCE LIST 7-16

PART NUMBER TO PAGE NUMBER CROSS REFERENCE LIST

Part Number	Page Number
C460919	2-195
CD001	2-27
00500-15	4-2
00960	2-123
01314	2-137
01684	2-99, 2-139
01685	2-9, 2-11, 2-67, 2-71, 2-127
01754	3-25
01760	2-21, 2-25
01762	2-139
02351	2-77
02706	4-17, 4-19
02850	2-7, 2-19, 2-21, 2-23, 2-111, 2-113, 2-123, 3-23
03026	2-59, 2-61, 2-63, 2-65
03192	2-67
03193	2-119
04706	2-39
04733-2	2-111
06532	2-47, 2-51
06548	2-77
06549	2-115, 2-117, 2-127, 3-3, 3-5, 3-7, 3-9, 3-15, 3-17, 3-43
06926	2-37
06927	2-21, 2-23, 2-111, 2-113, 2-123
06928	2-19
06932	3-15
06933	2-17, 2-19, 2-43, 2-45, 2-47, 2-49, 2-51, 2-53, 3-3, 3-5, 3-7, 3-9, 3-17, 3-43
06934	3-15, 3-17
06935	3-3, 3-5, 3-7, 3-9, 3-15
06937	2-47, 2-51
06938	3-3, 3-5, 3-7, 3-9
06940	3-29, 3-31
06941	2-81
06942	2-77, 2-121, 3-15, 3-17
06943	2-41, 2-123
06944	2-157
06945	2-101
06955	2-27, 2-69, 2-97, 2-137
06960	2-121
06961	2-39, 2-67, 2-73
06962	2-81, 2-83, 2-109, 2-137
06963	2-41, 2-43, 2-45, 2-133
06965	2-129, 3-11
06969	2-93, 2-95
06971	2-117
06975	2-139
06977	2-139
07255	2-47
07259	2-115, 2-117
07299	2-43, 2-45
07450	2-135
07471	2-157
07785	3-3, 3-5, 3-7, 3-9
07786	2-123
07788	2-9, 2-11
07789	2-17, 2-19, 2-115, 2-117, 3-15
07790	2-15, 2-23, 2-27, 2-31, 2-41, 2-73, 2-83, 2-107, 2-109, 3-5, 3-9, 3-33, 3-35
07791	2-7, 2-21, 2-23, 2-25, 2-27, 2-29, 2-43, 2-45, 2-55, 2-57, 2-73, 2-75, 2-77, 2-79, 2-81, 2-89, 2-99, 2-111, 2-113, 2-129, 2-131, 2-151, 2-157, 3-25
07792	2-13, 2-15, 2-125, 3-33
07805	2-139
07810	2-137
07819	3-17
08085	2-17, 3-37
08165	2-75
08166	2-73
08175	2-129, 2-139
08178	2-99
08179	2-127, 2-135
08182	2-93, 2-99, 2-127, 2-129, 2-133, 2-137, 3-11
08202	2-93, 2-95
08236	2-107, 2-109
08329	2-89
08708	2-17, 2-33, 2-35, 2-39, 2-81, 2-101, 2-103, 2-105, 2-123, 2-157, 3-15, 3-17, 3-29, 3-31, 3-35, 3-37
08709	2-7, 2-27, 2-41, 2-43, 2-45, 2-59, 2-61, 2-63, 2-65, 2-69, 2-73, 2-75, 2-79, 2-81, 2-83, 2-97, 2-101, 2-111, 2-115, 2-117, 2-123, 2-127, 2-129, 2-133, 2-135, 2-137, 2-139, 2-151, 3-11
08711	2-93, 2-95, 2-139
08712	1-2, 2-99, 2-107, 2-109
08713	1-2, 2-103, 2-105, 2-107, 2-109, 2-125, 2-127, 3-23
08714	2-119, 3-3, 3-7
08716	3-3, 3-5, 3-7, 3-9
09007	2-99
09010	2-9, 2-11, 2-99, 2-107, 2-109, 2-139
09011	2-89, 2-107
09037	2-51
09088	2-93
09120	2-139
09145	3-3, 3-5, 3-7, 3-9
09164	3-15, 3-17
09200	2-15, 3-17
09244	2-135, 3-7, 3-9, 3-42
09252	2-115, 2-117
09740	2-79, 2-89, 3-23
09893	2-123
1005229	1-1, 2-91
1005740	2-137
1007220	2-137
1007482	2-85
1007807	2-139
1007953	2-157
1008640	2-67
1011107	2-77
1011123	3-11
1011216	2-73, 2-75
1011780	2-59, 2-63
1011895	2-77
1012248	2-77
1012615	2-33, 2-35
1013031	2-73, 2-75
1013086	2-77
1013117	2-73, 2-75
1013509	2-77
1013588	2-49, 2-53
10137	2-67, 2-71
1014295	2-43, 2-45
1014563	2-67, 2-83
1014843	2-83
1015205	2-83
1015261	3-27
1015273	2-27
1015274	2-23
1015314	2-83
1015547	2-47, 2-49, 2-53, 2-57
1015815	2-53
1015897	2-47
1015911	2-125
1015930	2-47, 2-55
1016029	3-25

Part Number	Page Number
1016314	2-67, 2-71, 3-29, 3-31
1016556	2-47, 2-59, 2-63
1016559	2-47, 2-57
1016560	2-47, 2-57
1016563	3-29, 3-31
1017141	2-195
1017218	2-31, 2-103, 2-107, 2-123, 2-125
1018289	2-151
1019939	2-77
1020341	3-15, 3-17
1020434	2-195
1021265	2-39
1021579	1-1, 2-151
1022105	2-17, 2-19
1023486	2-143, 2-147
1023853	2-81
1024260	2-37, 2-39, 4-5
1024478	2-37, 2-39
1025101	2-195
1025132	2-151
1025133	2-151
1025196	2-29
1025990	2-143, 2-147
1026317	2-115, 2-117
1026459	2-133, 3-11
1026462	2-133, 3-11
1026525	2-133, 3-11
1026540	2-41
1026600	2-41
1026605	2-97
1026610	2-97
1026681	2-105
1026688	2-99
1026755	2-107, 2-109
1026798	1-2, 2-103, 2-105
1026825	2-15
1026841	2-95
1026856	2-95
1026879	1-2, 2-107, 2-109
1027149	2-121
1027380	2-5
1027531	2-101
1027533	2-101
1027589	2-81, 2-83
1027651	2-101
1027756	2-89, 4-13
1027798	3-3, 3-5, 3-7, 3-9
1027800	3-3, 3-5, 3-7, 3-9
1028017	2-73
1028129	2-79
1028136	2-73
1028146	2-95
1028159	2-95
1028201	2-13, 2-15
1028246	2-101
1028252	2-7
1028343	2-55
1028492	2-89
1028558	2-41, 2-73, 2-75, 6-25
1028559	2-41
1028560	2-153
1028711	2-47
1028722	2-51
1028750	2-33
1028790	2-33, 2-35
1028832	2-33, 2-35
1028924	2-77
1029018	2-41, 2-43, 2-45
1029061	2-147
1029105	3-29, 3-31
1029183	2-29
1029238	2-111, 2-113
1029254	2-157, 4-17
1029259	2-85
1029280	2-111, 2-113
1029288	2-85
1029293	2-77
1029295	2-77
1029580	2-9
1029674	2-129, 2-131
1029682	2-129, 2-133, 3-11
1029689	2-67
1029704	2-129
1029709	2-129
1029801	2-11
1029951	2-33, 2-35
1030102	2-115, 2-117
1030218	1-2, 2-107, 2-109
1030306	2-81
1030374	2-157
1030451	2-125
1030475	2-81
1030498	2-153, 2-155
1030553	2-13
1030572	2-81
1030585	2-23
1030587	2-13
1030588	2-15, 2-23
1030592	3-25
1030593	2-23, 2-27
1030622	2-123
1030626	2-81
1030646	2-13
1030782	3-33, 3-35
1030813	2-33
1030970	2-85
1030973	3-3, 3-5, 3-7, 3-9
1030985	2-33, 2-35
1031026	2-81, 2-83
1031027	2-81
1031051	2-153
1031122	2-123
1031207	3-25
1031211	2-33
1031312	2-47, 2-51
1031439	2-41
1031503	2-7, 2-119
1031566	2-81, 2-83
1031616	3-23
1031621	2-37
1031623	2-23, 2-83
1031625	2-19
1031641	2-29
1031664	2-33, 2-35
1031665	2-127
1031683	2-33
1031916	3-11
1031921	2-101
1031939	2-101
1032012	1-1, 2-9, 2-11
1032067	3-19, 3-21
1032069	3-19
1032112	2-77
1032119	2-59, 2-61, 2-65
1032147	2-21
1032193	2-25
1032262	3-19, 3-21
1032315	2-13, 2-15
1032416	2-25
1032429	2-137
1032432	2-137
1032449	2-137
1032488	2-95
1032515	1-1, 2-95
1032545	2-103, 2-105, 3-15
1032584	3-15, 3-17
1032707	3-15, 3-17
1032722	3-19, 3-21
1032752	3-15, 3-17
1032812	2-77
1032821	2-103
1032894	2-21
1032915	2-151
1032962	2-21, 2-23
1033201	2-13
1033237	2-101
1033286	2-13, 2-15
1033287	2-13, 2-15
1033288	2-13, 2-15
1033291	2-17, 2-19
1033343	2-9, 2-11
1033520	2-193
1033575	2-77
1033578	2-7
1033607	2-21
1033630	2-77
1033644	2-67
1033670	2-143, 2-147
1033746	2-77
1033760	2-33, 2-35
1033771	2-33, 2-35
1033788	2-153, 2-155
1033863	2-127
1033883	2-33, 2-35
1033884	2-33
1033897	2-77
1033914	2-157

Part Number	Page Number
1033915	2-157
1033916	2-157
1033995	2-99, 2-101
1034133	2-101
1034168	1-2, 2-103, 2-105
1034191	3-3, 3-5, 3-7, 3-9
1034244	2-101
1034254	2-21
1034314	2-73
1034321	2-73
1034358	2-21
1034378	2-21, 2-23
1034455	2-93
1034462	2-93
1034501	2-133
1034547	2-81
1034614	2-103
1034633	2-77
1034671	2-161, 4-9
1034760	2-127
1034763	2-127
1034803	2-37
1034806	2-89
1034854	2-13
1034864	2-21, 2-111
1034910	2-99
1034978	2-119
1035152	2-63
1035153	2-33, 2-35
1035293	2-121
1035400	2-137
1035483	2-123
1035506	2-121
1035507	2-33, 2-35
1035510	2-123
1035619	2-101
1035620	2-99
1035660	2-103, 2-105, 3-15
1035684	1-2, 2-103, 2-105
1035807	2-21
1035808	2-21
1035809	2-21
1035810	2-21
1035811	2-25
1035812	2-29
1035813	2-77, 2-79
1035815	2-29
1035826	2-99
1036027	2-95
1036111	3-3, 3-7
1036173	3-3, 3-5, 3-7, 3-9
1036183	3-7, 3-9
1036185	2-143, 2-147
1036193	2-143, 2-147
1036194	2-143, 2-147
1036199	2-151
1036201	2-147, 3-12
1036230	3-29, 3-31
1036270	2-79
1036333	2-133, 3-11
1036489	2-17, 2-19
1036500	2-17, 2-19
1036502	2-17, 2-19
1036513	2-21, 2-25
1036519	2-103, 2-105
1036608	2-13, 3-37
1036702	2-127
1036802	2-121
1036819	2-7
1036892	2-9, 2-11, 2-13, 2-15, 2-23, 2-27, 2-31, 2-41, 2-67, 2-69, 2-73, 2-81, 2-83, 3-5, 3-9
1036906	2-143, 2-147
1036913	2-7
1036985	3-3, 3-7, 3-9
1036995	3-3, 3-5, 3-7, 3-9
1037088	2-123
1037099	2-103, 2-105
1037162	2-143, 2-147
1037265	2-127
1037311	6-28
1037335	2-107, 2-109
1037345	1-2, 2-9, 2-11, 2-77, 2-107, 2-109
1037346	2-7, 2-13, 2-15, 2-17, 2-19, 2-21, 2-23, 2-25, 2-27, 2-29, 2-47, 2-51, 2-59, 2-61, 2-63, 2-65, 2-69, 2-73, 2-75, 2-77, 2-79, 2-81, 2-83, 2-99, 2-103, 2-105, 2-113, 2-129, 2-131, 2-135, 2-151, 2-153, 3-23, 3-37
1037354	2-29, 2-41, 2-43, 2-45, 2-79, 2-81, 2-95, 2-107, 2-111, 2-127, 2-133, 2-135, 2-151
1037355	2-7, 2-59, 2-61, 2-63, 2-65, 2-77, 2-83, 2-93, 2-95, 2-115, 2-117, 2-129, 2-135
1037358	2-13, 2-15, 2-41, 2-125, 2-127, 2-135, 2-137, 3-19, 3-21, 3-23, 3-40, 3-41
1037476	2-127
1037998	2-79
1038037	1-2, 2-103
1038060	2-127
1038070	2-115
1038101	2-127
1038160	2-121
1038172	2-121
1038176	2-107, 2-109, 2-137
1038209	2-59, 2-61, 2-63, 2-65
1038329	2-127
1038353	1-2, 2-103
1038360	2-99
1038372	2-127
1038387	2-193
1038738	2-13, 2-15
1038806	2-13, 2-15
1038896	2-127
1038915	2-115, 2-117
1038922	2-115
1038959	2-13, 2-15
1039007	3-15
1039008	3-15
1039020	3-15
1039038	3-15
1039057	2-115, 2-117
1039067	3-15
1039127	2-123
1039141	2-133, 3-11
1039199	2-133, 3-11
1039210	2-157
1039228	2-127
1039309	2-157
1039320	2-9, 2-11
1039340	2-157
1039425	2-13
1039483	2-157
1039501	2-139
1039517	2-95
1039520	2-95
1039523	2-95
1039553	2-127
1039586	2-143, 2-147
1039628	2-133
1039649	3-11
1039735	3-3, 3-5, 3-7, 3-9
1039753	2-143, 2-147
1039812	2-111
1039846	2-123
1039853	2-123
1039883	2-107, 2-109
1039907	2-107
1039914	2-117
1039916	2-107, 2-109
1039942	2-111
1039948	2-123
1039971	2-111, 2-113
1039999	2-111, 2-113
1040019	2-135, 3-7, 3-9
1040082	2-111
1040091	2-159, 4-7
1040118	2-111
1040146	2-7
1040162	2-99
1040276	2-105
1040281	2-17, 3-37
1040363	2-17, 2-19

Part Number	Page Number
1040400	2-105
1040408	2-105
1040467	2-39, 2-79, 2-81, 2-83, 2-103, 2-105, 2-107, 2-109, 2-135, 2-137, 3-15, 3-23
1040564	2-125
1040590	2-105
1040707	2-29
1040753	2-135, 2-137
1040756	2-125
1040759	2-107, 2-109
1040761	2-99
1040812	2-125
1040816	2-21, 2-23
1040962	2-37
1041034	2-133, 3-11
1041102	2-5
1041123	2-135
1041151	2-55, 2-57
1041152	2-55, 2-57
1041237	2-123
1041383	2-143, 2-147
1041385	2-143, 2-147
1041386	2-143, 2-147
1041392	2-143, 2-147
1041393	2-89
1041446	2-137
1041473	3-15, 3-17
1041539	2-135
1041754	3-15, 3-17
1041839	2-81
1041870	3-33, 3-35
1041873	2-33, 2-35
1041882	3-15, 3-17
1041925	3-17
1041941	2-143, 2-147
1041944	3-17
1041967	2-103, 2-105
1042021	2-97
1042024	2-97
1042027	2-125
1042047	2-121
1042073	2-17, 3-37
1042097	2-5
1042101	1-1
1042327	2-115
1042328	2-115
1042463	2-123
1042493	3-17
1042511	3-17
1042515	2-89
1042518	3-17
1042661	3-17
1042718	3-15, 3-17
1042785	2-135
1042791	2-9, 2-11
1042812	2-9
1042829	2-11
1042831	3-17
1042855	2-135
1042868	3-17
1042885	3-40
1042888	3-40
1042954	1-1, 3-33
1042973	2-115, 2-117
1043045	3-33
1043049	3-12
1043066	2-151
1043092	2-125
1043176	3-40, 3-41
1043183	3-40
1043372	2-195
1043373	2-195
1043552	2-73
1043558	2-73
1043652	2-159, 2-161
1043747	2-79
1043751	2-21, 2-59, 2-63
1043754	2-157
1043755	2-157
1043759	2-81
1043760	2-21
1043762	2-21
1043813	2-79
1043869	2-125
1043896	2-81
1043927	2-125
1043996	2-21
1044095	2-107
1044229	2-81
1044279	3-29, 3-31
1044391	2-81
1044419	1-2, 2-107, 2-109
1044420	1-2, 2-107, 2-109
1044565	2-63
1044691	2-13, 2-15
1044764	2-103, 2-105
1044768	2-103, 2-105
1044939	2-103
1044950	1-2, 2-107, 2-109
1044992	2-77, 2-79
1044998	2-121
1045009	3-33, 3-35
1045033	3-33, 3-35
1045061	2-125
1045063	3-29, 3-31
1045101	3-19
1045109	2-121
1045112	3-33
1045125	2-151
1045128	2-123
1045151	3-33
1045153	3-33
1045155	3-33
1045156	3-33, 3-35
1045203	3-33, 3-35
1045224	2-7
1045232	2-123
1045348	1-1, 2-7
1045352	2-9, 2-11
1045354	1-1, 2-9, 2-11
1045357	1-2, 2-103, 2-105
1045359	1-2, 2-103
1045366	1-1, 2-9, 2-11
1045434	2-121
1045487	2-33, 2-35, 2-127
1045525	2-17, 3-37
1045681	3-33, 3-35
1045764	2-81, 2-83
1045947	3-44
1045964	2-135, 2-137
1045999	2-47, 2-51
1046048	2-135
1046052	2-135
1046109	2-153
1046121	2-143, 2-147
1046406	2-21, 2-29
1046408	2-111
1046413	2-21
1046418	2-29
1046426	2-13, 2-15
1046428	2-9, 2-11, 2-125
1046613	2-77
1046890	2-139
1046893	2-33
1046928	2-117
1046929	2-117
1046993	3-15, 3-17
1047015	3-15, 3-17
1047073	2-107, 2-109
1047096	2-107, 2-109
1047225	3-33, 3-35
1047418	2-103, 2-105
1047420	2-103, 2-105
1047543	2-103, 2-105
1047618	2-193
1047619	2-193
1047741	2-195
1048261	2-17, 2-19
1048335	2-125
1048353	2-125
1048740	3-23
1048743	3-23
1048891	1-2, 2-107, 2-109
1048932	2-17, 2-19
1048950	2-17, 3-37
1048955	2-19
1048974	2-79
1048997	2-123
1049017	3-23
1049061	3-23
1049158	2-103, 2-105
1050295	3-23
1051052	2-17, 2-19
1051863	2-83
1053164	2-125
1053318	2-27
1053361	2-125
1054236	2-155

Part Number	Page Number
1054256	2-129, 2-131, 3-11
1054382	2-81, 2-83
1054428	2-81, 2-83
1054565	2-63
1054664	2-155
1054842	2-21
1054901	2-89, 4-15
1054905	2-157, 4-19
1055002	2-83
1055029	2-85, 2-87
1055106	2-41
1055170	2-51
10552	2-73
1055377	2-67
1055381	2-67
1055425	2-67
1055552	2-49
1055564	2-83
1056232	2-47
1056233	2-51
1056241	2-73
1056300	2-55, 2-57
1056406	2-81
1056407	2-81
1056566	2-41
1056769	2-33, 2-35
1056828	2-15
1057029	5-11
1057337	2-139
1057338	2-129, 2-131, 3-11
1057643	2-139
1057707	1-2
1057708	1-2
1057710	1-2
1057711	1-2
1057776	2-23
1057778	2-23
1057786	2-23
1057875	2-15
1057880	2-15
1057890	2-59, 2-61, 2-63, 2-65
1057934	2-113
1057936	2-113
1057942	2-113
1057961	2-27
1057999	2-81
1058092	2-103, 2-105
1058108	2-15
1058273	2-15
1058404	2-83
1058623	2-85
1058670	2-83
1058784	2-39
1058785	2-39
1058807	2-39
1058996	2-37, 2-39
1059052	2-83
1059211	2-23
1059221	2-31
1059223	2-103, 2-105
1059252	3-23, 3-25
1059269	2-27
1059276	2-27
1059278	2-113
1059285	2-27
1059286	2-27
1059291	2-27
1059307	2-15
1059339	2-113
1059440	2-23
1059474	2-73
1059477	2-23
1059478	2-23
1059479	2-23
1059481	2-23
1059516	2-23
1059520	2-23
1059868	2-31
1059874	2-23, 2-31
1059996	2-23
1060009	2-83
1060207	2-63
1060343	2-83
1060413	2-111, 2-113
1060449	2-23
1060546	3-41
1060586	3-23
1060639	2-23
1060648	3-25
1060745	2-73, 2-75
1060763	2-127
1060764	2-133
1060765	2-121
1061000	2-23
1061016	3-21
1061047	2-195
1061048	2-195
1061140	3-5, 3-9
1061145	2-23
1061146	2-23
1061147	2-23
1061162	3-41
1061203	3-5, 3-9
1061498	2-83
1061629	3-41
1061961	1-1, 2-93
1062083	3-23
1062084	3-23
1062116	2-47, 2-57
1062944	3-27
1062952	3-27
10632	3-25
10632-14	3-5, 3-9
10632-4	2-123
10632-8	2-13
10632-9	3-5, 3-9
1063456	2-193
1063457	2-193
1064528	2-15
1065452	2-143, 2-145, 2-147, 2-149
1065453	2-143, 2-145, 2-147, 2-149
1065781	2-157
1066063	2-113
1066893	2-17, 2-19
1066933	3-25
1066952	3-23
1066957	3-27
1066972	3-25
1066980	3-27
1067052	2-139
1067053	2-157
1067054	2-155
1067055	2-123
1067059	2-115, 2-117
1067083	2-145, 2-149
1067084	2-145, 2-149
1067086	2-149
1067087	2-145, 2-149
1067088	2-149, 3-11
1067089	2-145, 2-149
1067090	2-145, 2-149
1067097	2-145, 2-149
1067099	2-145, 2-149
1067101	2-145, 2-149
1067102	2-145, 2-149
1067104	2-145, 2-149
1067105	2-145, 2-149
1067106	2-145, 2-149
1067107	2-145, 2-149
1067108	2-145, 2-149
1067109	2-145, 2-149
1067110	2-145, 2-149
1067112	2-145, 2-149
1067113	2-145, 2-149
1067115	2-145, 2-149
1067177	2-155
1067178	2-157
1067179	2-157
1067180	2-157
1067181	2-157
1067182	2-157
1067185	2-155
1067186	2-155
1067187	2-155
1067216	3-27
1067217	3-25
1067299	2-145, 2-149
1067300	2-145, 2-149
1067661	3-11
1067662	3-11
1067773	2-151
1067869	3-23
1067870	3-25
1067872	3-23
1067873	3-25
1067874	3-23
1067875	3-23

Part Number	Page Number
1067876	3-27
1067877	3-27
1067878	3-23
1067879	3-27
1067880	3-27
1067881	3-27
1067884	3-27
1067885	3-27
1067886	3-25
1067887	3-25
1067889	3-27
1067890	3-27
1067891	3-23
1067895	3-27
1067907	3-27
1067909	3-25
1067910	3-25
1067911	3-23
1067912	3-38
1067917	3-25
1067918	3-23, 4-11
1067919	3-27
1068299	2-155
1068687	3-25
1068688	3-25
1068689	3-25
1068690	3-25
1068751	3-25
1068947	3-44
1069019	1-2
1069020	1-2
1069201	3-25
1069210	3-23
1069211	3-23
1069229	3-25
1069231	3-25
1069232	3-23
1069310	3-25
1069311	3-27
1069312	3-27
1069313	3-27
1069314	3-25
1069315	3-25
1069316	3-23
1069317	3-25
1069318	3-25
1069322	3-27
1069326	3-23, 3-25, 3-27
1069330	3-25
1069580	3-42
1069681	3-23
1069687	3-23
1069688	3-23, 3-25
1070124	3-42
1070324	3-42
1070348	2-45
1070833	2-61, 2-65
1070920	2-61, 2-65
1070926	2-65
1070976	2-87
1070999	2-43, 2-45
1071010	2-87
1071014	2-87
1071053	2-89
1071132	3-42
1071136	2-69
1071138	2-69
1071141	3-35
1071155	2-43
1071186	2-69
1071229	2-75
1071242	2-75
1071243	2-75
1071258	2-75
1071376	2-75
1071397	6-25
1071398	6-25
1071440	2-49, 2-53
1071502	2-49
1071599	2-61
1071606	2-43, 2-45
1071653	2-193, 6-25
1071654	2-193, 6-25
1071656	2-75
1071680	2-69
1071681	3-35
1071716	2-157
1071717	2-157
1071722	2-83
1071854	2-71
1071855	2-71
1071857	2-193
1071860	2-193
1071864	3-35
1071865	3-35
1071883	3-35
1072046	3-25
1072047	3-25
1072054	3-35
1072384	2-87
1072386	2-87
1072408	2-49, 2-53
1072476	2-101
1072531	2-145, 2-149
1072559	2-49, 2-53
1072632	2-155
1072633	2-145, 2-149
1072815	2-19
1073641	2-19
10832	2-41, 2-157
11442-1	2-55, 2-57
11531	2-85
11635	1-2, 2-103
11984	2-63
1201894	2-19
12267	2-127, 2-135, 2-137
12277	2-139
13015	2-67, 2-71
13248	2-101, 2-121, 2-123, 2-125, 2-159, 2-161, 3-3, 3-7
13513	2-17
13773	2-139
13865	2-133, 3-11
13904	4-7, 4-9
13907	4-7, 4-9, 4-17, 4-19
140916	3-42
140962	2-17, 2-19, 2-81, 3-37
14242	2-93, 2-95
14432	2-59, 2-61, 2-63, 2-65
14605	2-99
15331	2-99
15543	2-59
15675	2-109, 2-113
16082	2-129, 2-131, 3-11
16213	2-101
16391	2-125
16411	1-2
16412	1-2
16455	2-115, 2-117
16695	4-2, 4-3
16735	2-15, 2-23, 2-27, 2-31, 2-123, 2-157, 3-23
16930	2-7, 2-107, 2-119
16931	2-67, 2-69, 2-79, 2-123, 2-125, 2-139, 3-15, 3-17
17414	2-79
19064	2-23
19065	2-7, 2-97, 2-111, 2-113
19066	2-15, 2-23, 2-33, 2-35, 2-47, 2-49, 2-51, 2-53, 2-113, 2-115, 2-117, 2-127, 2-135, 3-3, 3-5, 3-7, 3-9, 3-15, 3-17, 3-33, 3-35, 3-42
19207	2-195
19312	2-47, 2-49, 2-51, 2-53
19313	2-67
19315	2-41, 2-47, 2-51
19317	2-47, 2-51
19583	2-89
19676	2-81
19760	2-79
20634	2-125
21119	2-143, 2-147
21168	2-13, 2-15, 2-111, 2-115, 2-117
21194	2-85, 2-87
21195	2-67
21196	2-41, 2-43, 2-45
21198	2-101, 2-157

Part Number	Page Number
21246	2-7
21933	4-5
21934	4-5
21935	4-5
222158	2-107, 2-115, 2-117, 2-151
222159	2-107, 2-109, 3-29, 3-31
222196	2-129, 2-133, 3-11
222236	2-101
222290	2-33, 2-35, 2-193
222460	2-93, 2-95, 2-127, 2-135, 2-137
222497	2-73, 2-75
22290	2-39, 2-133, 3-11
22297	2-85, 2-87
22308-3	2-79
223350	2-13, 2-15
223609	2-127
22654	4-2, 4-3
23156	2-79
24012	2-73, 2-75
24047	2-79
24265	2-105
24339	2-89, 2-95
24899	2-139
24928-1	2-79
24976	2-41
25014	2-73, 2-75, 3-27
25122	1-1, 2-151
25312	3-43
25537	2-17
25887	2-139
26395-2	2-7
26496	2-79
26663	2-97
27767	2-47, 2-57
27990	3-33, 3-35
28296	2-121
29558	2-127, 2-133, 3-11
30013	2-23, 2-123
30251	2-139
30252	2-139
30253	2-139
30255	2-139
30407	3-11
31249	2-97
31354	4-2, 4-3
313552	3-11
31373	4-3
31375	4-2
31380	4-3
31381	4-2
31385	4-3
314421	3-15
314427	3-15
314428	3-15
314432	3-15
31525	3-33, 3-35
31613	1-1, 2-151
31922	3-7, 3-9
32126	2-89
32483	2-17, 2-39, 2-49, 2-53, 2-101, 2-109, 3-3, 3-5, 3-7, 3-9
32485	2-33, 2-35, 2-41, 2-43, 2-45, 2-67, 2-93, 2-125, 2-127, 2-129, 2-139, 2-157, 3-33, 3-35
32486	2-39, 2-43, 2-45, 2-93, 2-95, 2-99, 2-127, 2-129
32490	1-2, 2-41, 2-47, 2-51, 2-77, 2-81, 2-107, 2-109, 3-15, 3-17, 3-29, 3-31
32491	1-2, 2-7, 2-9, 2-11, 2-15, 2-17, 2-19, 2-23, 2-27, 2-29, 2-41, 2-43, 2-45, 2-59, 2-61, 2-63, 2-65, 2-69, 2-73, 2-75, 2-79, 2-81, 2-83, 2-89, 2-101, 2-103, 2-105, 2-107, 2-109, 2-111, 2-113, 2-123, 2-133, 2-137, 3-11, 3-15, 3-17, 3-23
32492	2-9, 2-11, 2-41, 2-43, 2-45, 2-67, 2-71, 2-73, 2-75, 2-81, 2-83, 2-99, 2-107, 2-109, 2-123, 2-129, 2-131, 2-133, 2-137, 3-11, 3-19, 3-21, 3-27, 3-33, 3-35, 3-42
32493	2-7, 2-41, 2-117, 2-119
32522	2-93
32598	2-93, 2-95, 2-115, 2-117
32716	2-127, 2-135, 2-137
32960	2-81, 2-83
32982	2-151
32983	2-17, 2-19, 2-67
32984	2-41, 2-67, 2-71
32987	2-89, 2-139
33580	4-13, 4-15
33612	2-73
33807	2-135
33928	2-97
33932	2-97
33948	2-121
34176	4-2
34178	4-13, 4-15
34357	2-153, 2-155, 2-159, 2-161
34738	2-81
34816	2-33
34821	2-67
34823	2-67
35529	2-115, 2-117
35707	2-79
35710	2-79
35973	2-139
360369	2-17, 2-19
360370	2-17, 2-19
360460	2-127
360801	2-127
360943	2-103, 2-113
360973	2-23, 3-42
361023	2-151
361075	2-33, 2-35
361339	2-109, 2-125
36159	2-49, 2-53
363087	2-135, 2-137
36328	2-115, 2-117, 2-139
363976	2-67, 2-97
365009	2-143, 2-147
36661	2-125
367403	2-127
367404	2-115, 2-117
367679	2-103, 2-105
367718	3-17
367950	3-15
367974	3-15, 3-17
368197	2-137
369704	2-7
369745	2-63
369746	1-1, 2-59, 2-61, 2-63, 2-65
369747	2-59, 2-61, 2-63, 2-65
369781	2-93, 2-95, 2-127
370008	2-5
370009	2-5
370181	2-9, 2-11, 2-91, 2-95
371503	6-21
371509	6-17
371527	2-67
371562	6-17
371770	2-55, 2-57
371790	3-44
371861	2-73
371865	2-67
371866	2-41
371868	2-41
371869	2-41
371870	2-41
371871	2-67
371872	2-67
371877	2-41, 2-55, 2-57
371931	5-5
371932	5-5
371933	5-5
371934	5-5
371935	5-5

Part Number	Page Number
371936	5-5
371937	5-5
371940	5-8
371941	5-8
371942	5-5
371943	5-8
371944	5-5
371945	5-5
371946	5-5
371947	5-7
371948	5-7
371949	5-7
371950	5-7
371951	5-7
371952	5-7
371954	5-3
371955	5-3
371956	5-3
371957	5-3
371958	5-3
371959	5-8
371960	5-8
371961	5-11
371964	5-5
371965	5-5
371966	5-5
371967	5-5
371968	5-5
371969	5-5
371970	5-5
371971	5-5
371972	1-1, 2-41, 5-8
371973	5-8
371975	5-8
371976	5-5
371977	5-5
371978	5-5
371979	5-5
371980	5-7
371981	5-7
371983	5-7
371984	5-7
371986	5-7
371987	5-7, 5-8
371988	5-7
371990	5-3, 5-7
371991	5-7
371992	5-8
371993	5-7
371994	5-7
371995	5-8
371996	2-41, 5-7
371997	5-7
371998	5-7
371999	5-3, 5-5
372001	5-7
372002	2-41, 5-7
372003	5-7
372004	5-7
372005	5-7
372007	5-3
372008	5-3
372009	5-11
372010	5-11
372011	5-11
372012	5-11
372013	5-11
372014	5-11
372015	5-11
372016	5-11
372017	5-11
372018	5-3
372019	5-3
372020	5-9, 6-16
372021	5-9
372022	5-3
372023	5-3
372024	5-3
372025	5-3
372026	5-3
372027	5-3
372028	5-3
372029	5-3
372030	5-3
372031	5-3
372032	5-3
372033	5-3
372034	5-3
372035	5-3
372036	5-3
372037	5-3
372038	5-3
372039	5-3
372040	5-11
372041	5-11
372043	5-11
372044	5-11
372046	5-11
372047	5-3
372048	5-3
372049	5-9
372050	5-9
372051	5-9
372052	5-9
372053	5-9
372055	5-12
372056	5-12
372057	5-12
372058	5-12
372059	5-12
372060	5-12
372066	5-9
372235	2-193
372236	2-193
372237	2-193
372440	1-1, 2-77
372470	2-47, 2-51
372492	6-25
372493	6-25
372528	2-55
372529	2-55, 2-57
372534	2-47, 2-51
372539	2-55, 2-57
372543	2-47, 2-51
372544	2-47
372545	2-47
372547	2-47, 2-51
372548	2-47, 2-51
372549	2-47, 2-51
372550	2-47, 2-51
372554	2-41
372556	2-41
372557	2-67
372560	5-8
372567	5-7
372571	1-1
372572	5-7
372573	5-3
372574	5-3
372575	1-1, 5-12
372579	2-51
372603	5-12
372615	1-1, 2-55
372616	5-11
372862	2-41
372863	3-44
372882	5-3
372891	6-25
372953	2-41
373217	4-13
373226	4-13, 4-15
373236	4-13, 4-15
373291	4-13, 4-15
373297	4-13, 4-15
373298	4-13, 4-15
373299	4-13, 4-15
373317	4-17, 4-19
373327	4-17, 4-19
373336	4-17, 4-19
373337	4-17, 4-19
373346	4-17, 4-19
373389	4-17, 4-19
373391	4-17, 4-19
373393	4-17, 4-19
373394	4-17, 4-19
373395	4-17, 4-19
373396	4-17, 4-19
373398	4-17, 4-19
373402	4-17, 4-19
373413	4-17, 4-19
373429	4-17, 4-19
373430	4-17, 4-19
373431	4-19
373434	4-17, 4-19
373435	4-15
373436	4-15
373437	4-15
373438	4-15
373493	4-17, 4-19
373543	4-15

Part Number	Page Number
373545	4-13, 4-15
373637	4-7, 4-9
373639	4-7, 4-9
373640	4-7, 4-9
373642	4-7, 4-9
373646	4-7, 4-9
373647	4-7, 4-9
373656	4-7, 4-9
373657	4-7, 4-9
373658	4-7, 4-9
373663	4-7, 4-9
373665	4-7, 4-9
373678	4-17
373684	4-7, 4-9
373685	4-7, 4-9
373690	4-7, 4-9
373691	4-7, 4-9
373692	4-7, 4-9
373693	4-9
373694	4-7, 4-9
373695	4-13
373696	4-13
373697	4-13
373698	2-89
373699	4-17, 4-19
373700	4-17, 4-19
373701	4-17, 4-19
373702	2-115, 2-117
373707	2-157
373708	2-157
373711	2-123
373712	2-123
374000	2-195
374224	2-195
374560	2-89
374563	2-89
374710	2-93
37555	4-2, 4-3
377084	2-33, 2-35
377165	2-7
377212	2-85
377235	2-143, 2-147
377249	2-139
377537	1-2
377538	1-2
377540	1-2
379607	2-129, 2-131, 3-11, 4-3
379608	2-139, 4-2
379684	2-135
379686	2-135
379829	2-109
381391	2-61, 2-65, 2-81
381857	2-143, 2-147
381865	2-143, 2-147
383139	2-139
383142	2-139
383143	2-139
383160	1-1
383161	2-7
383194	2-137
383202	2-195
383203	2-139, 2-195
383205	2-135, 2-137
383981	2-77
384442	2-73
384961	5-5
384962	5-8
384963	5-5
384964	5-5
384966	5-7
384968	5-7
384970	2-55, 2-57
384971	2-55, 2-57
384972	2-47, 2-51
384973	2-55, 2-57
384974	2-47, 2-51
384975	2-55
384976	2-51
384977	2-55, 2-57
384978	2-55, 2-57
384979	2-55, 2-57, 6-22, 6-29
384980	2-51
384983	2-55
384984	2-55, 2-57
384985	2-47, 2-51
384986	2-55, 2-57
384990	2-193
384991	2-51
384992	2-47
384995	2-47, 2-51
384996	2-51
384997	2-193
384998	2-193
384999	2-193
385001	6-15
385011	6-22
385015	6-15, 6-16, 6-19, 6-21, 6-22
385029	2-41
388153	2-39
388552	5-11
38968	4-13, 4-15
39005	2-93, 2-121, 2-133, 3-11
390880	2-121
39239	2-33, 2-35
392645	2-79
39272	2-67, 2-71
39277	2-27, 2-81, 2-83, 2-97, 2-123, 3-23
39278	2-73, 2-75, 2-127
39279	2-115, 2-117
39283	2-125, 3-19, 3-21, 3-33, 3-35
39284	2-73, 2-75, 2-101, 3-33, 3-35
39285	2-123, 2-125, 2-159, 2-161
39309	2-37
39311	2-67, 2-125, 2-127
39312	2-137
393209	2-67
393215	2-123
39349	2-41, 2-67, 2-71, 2-75, 2-81, 2-83, 2-89, 2-101, 2-123, 2-125, 2-127, 3-23
39350	2-81, 2-89, 2-159, 2-161
39394	2-129, 2-131, 3-11
39395	2-139
394916	2-193
394922	2-33, 2-35
39527	4-2
39562	2-93
395973	2-159, 2-161
396213	2-143, 2-147
396217	3-12
396234	2-143, 2-147
397225	2-103, 2-105
397826	2-127
39785	2-67
397889	2-33, 3-15, 3-17
39810	2-41
398279	1-1, 2-59, 2-61, 2-63, 2-65
398481	2-195
398501	2-33, 2-35
398508	2-33
398528	2-33
398806	2-25, 2-27, 2-29, 2-31
40352	2-93
40607	2-123
40625	2-153, 2-155
41139	2-67, 2-113
41140	2-41, 2-125, 3-33, 3-35
41141	3-35
41142	2-7, 2-41, 2-43, 2-45, 2-67, 2-71, 2-125
41178	1-2, 2-103, 2-123
41186	2-101, 2-139
41187	2-9, 2-11, 2-73, 3-33, 3-35
41342	2-127
41346	2-43, 2-45
41359	2-99, 2-101
41361	2-41, 2-67, 2-71
41430	2-7, 2-41, 2-43, 2-45, 2-81, 2-83, 2-95, 2-101, 2-109, 2-123, 2-127, 2-137, 3-17, 3-19, 3-21, 3-33, 3-35
41619	2-9, 2-11
42011	2-67
42120-1	2-115, 2-117

Part Number	Page Number
43290	2-133, 2-137, 3-11
43555	3-33, 3-35
43611	2-27, 2-103, 2-105, 2-111
43844	2-47, 2-55, 2-77, 2-81, 2-83
44869	2-123, 2-139, 2-159, 2-161
44961	2-129, 2-131
45181	2-97
45261	2-129, 2-133, 3-11
45622	4-13, 4-15
45623	4-13, 4-15
45628	4-2, 4-3
45780	2-7
45786	2-91, 2-95
46480	2-151
46481	2-151
46482	2-151, 2-159, 2-161
46559	2-129, 2-131, 3-11
46563	2-97
47167	2-47, 2-57
47501	2-129, 2-131, 3-11
47504	3-11
47508	2-129, 2-131, 2-157, 3-12
47512	2-159, 2-161
47585	2-39
47638	2-115, 2-117, 2-151
47720	2-79
47801	2-89
48985	2-93
49034	3-19, 3-21, 3-23
49177	2-17, 2-19
49263	2-81, 2-111
49266	2-47, 2-81, 2-83, 3-3, 3-5, 3-7, 3-9
49609	2-37
49697	2-113
49800	2-19, 2-21, 2-23, 2-111, 2-113
49883	2-69
50335	2-41
50902	2-79, 3-33, 3-35
51109	2-97
51225	2-129, 2-133, 3-11
51305	2-47, 2-55
51338	2-89, 2-93, 2-95
51339	2-89, 2-93, 2-95
51534	2-133, 3-11
51538	2-99, 2-129, 2-133, 3-11
51560-5	2-59, 2-61, 2-63, 2-65
51564	2-139
51715	2-139
51813	2-127
51839	2-47, 2-55, 2-57
52142	2-153, 2-155
52296	3-17
52405	4-13, 4-15
52929	2-151
53076	2-151
53400-1	2-79
53400-4	2-79
53466	2-121
53468	2-107, 2-129, 2-131, 3-11
53816	2-91
53817	1-1, 2-91
53818	2-91
53819	2-91
53819-2	2-91
54051	2-89
54052	2-89
54087	2-89
54182	2-7
54184	2-7
54190	1-1, 2-7
54204	2-139
54274	2-81, 2-83, 2-123, 2-159, 2-161
54390	2-93, 2-95
54400	2-93, 2-127
54577	2-93
54878	2-139
54911-32	2-85, 2-87
54922	2-5
54923	2-5
54925	2-5
54927	2-5
54995	2-127, 2-135
55034	2-111
55586	2-81, 2-83, 2-137
55685	2-89, 2-159, 2-161
55779	2-139
55845	3-33, 3-35
55926	4-17, 4-19
56185	2-37, 2-39
56186	2-33, 2-35
56228	2-139
56690	2-37, 2-39, 2-159, 2-161
56692	2-81, 2-83, 2-157
56820	2-89
56827	2-157
56976A	2-79
57315	2-89
57773	2-41, 2-43, 2-45
57804	2-193
57824	2-139
57912	2-47
57988	3-12
58078	2-93
58228	2-41, 2-43, 2-45
58494	2-21, 2-25
58589	2-79
58592	2-41, 2-151
58842	2-89
59009	2-97
59192	2-9, 2-11
59194	2-11
59195	2-9
59440	2-5
59537	2-9
59538	2-11
59542	2-115, 2-117
59577	2-37, 2-39
59634	2-133, 3-11
59649	2-101
59658	2-127
59767	2-195
59899	2-127
60751	3-7, 3-9
610943	3-15, 3-17
611140	3-25
626081	2-103, 2-105
630448	2-107, 2-109
63234	2-125
63378	2-17, 2-19
63511	2-151
63810	2-47, 2-55, 2-57, 2-59, 2-63, 3-29, 3-31
63926	2-115, 2-117
64173	2-127
64425	2-127
64489	2-101
64886	2-89
65145-1	2-157
65206	2-143, 2-147
65232	4-3
66018	2-5
66019	2-5
66185	2-71
66188	2-195
66211	2-93
66213	2-93
67665	2-95
67811	2-157
68106	2-41
68441	3-12
68872	2-67, 2-71
68873	2-67, 2-71
69234	2-55
69461	2-17, 2-19
69904	2-7
69915	2-7
69972	2-115, 2-117
70096	4-17, 4-19
70100	4-17, 4-19
70157	2-89, 2-107, 2-109, 2-129, 2-131
70158	2-93
70161	2-93
70280	2-91
70622	2-39
70623	2-39
70709	2-39
70717	2-39

Part Number	Page Number
71373	2-93
71539	2-47, 2-49, 2-51, 2-53
71579	2-7
72381	2-195
72926	2-89
72968	2-7, 2-105
72970	2-39, 2-83
72977	2-67, 2-71
72979	2-55
73109	2-151
73281	2-89
73411	2-101
73471	2-47, 2-55
74027	3-27
74040	2-25
74094	4-2, 4-3
74095	4-2
74098	4-2, 4-7, 4-9
74099	4-2
74100	4-2, 4-3
74101	4-3
74122	4-13, 4-15
74123	4-13, 4-15
74125	4-13
74165	4-13, 4-15
74166	4-13, 4-15
74167	4-13, 4-15
74168	4-13, 4-15
74174	4-2
74180	4-17, 4-19
74183	4-5
74185	4-5
74193	4-5
74196	4-5
74222	4-5
74225	4-17, 4-19
74226	4-17, 4-19
74232	4-5
74237	4-17, 4-19
74243	4-5
74244	4-5
74245	4-5
74249	4-13, 4-15
74250	4-2, 4-3
74259	4-17, 4-19
75575	2-107, 2-109
75934	2-101
75968	2-39
762156	2-151
762179	2-129, 2-131
762282	2-85
762425	2-115, 2-117, 2-151
762426	2-89, 2-159, 2-161
762427	2-107, 2-109, 2-133, 2-137, 3-11
762428	2-83, 2-137
762432	2-89
762433	2-39, 2-159, 2-161
762437	2-159, 2-161
762439	2-129, 2-131, 2-157, 3-11
762445	2-123, 2-139, 2-159, 2-161
762456	2-83, 2-157
762463	2-151
762466	2-157
762468	2-89
762469	2-151, 2-157
762481	2-151
762484	2-151
762492	2-151, 2-155
763042	2-127
763045	3-15, 3-17, 3-42
76426	3-23
76570	2-9, 2-11, 2-81, 2-99, 2-101, 2-125, 2-127, 2-133, 3-11
767410	2-159, 2-161
767422	3-11
767430	2-159, 2-161
76825	2-59, 2-63
76888	3-15
769077	2-159, 2-161
76958	2-67
77003	4-7, 4-9
77005	4-7, 4-9
77006	4-7, 4-9
77097	2-107, 2-109, 2-133, 2-137, 3-11
771090	2-39
77345	2-89
77473	2-143, 2-147
78122	2-79
79380	3-15, 3-17
79381	2-85, 2-87
79536	2-63
79828	4-13, 4-15
80061	3-23
80395	2-129, 2-133, 3-11
80491	2-103, 2-105
81991	2-17
82200	3-3, 3-5
82733	2-103, 2-105
82739	2-123
82829	2-113
82839	2-99
83159	3-7, 3-9
83578	2-47, 2-55
84170	2-101
84581	2-129, 2-131, 3-11
86240	2-93, 2-135, 2-137
86328	2-85, 2-87
86799	2-13, 2-15
86866	2-99, 2-111
86877	2-195
86953	2-127
87172	3-40, 3-41
87308	3-33, 3-35
87316	2-17, 2-19, 3-37
87631	2-139
87672	2-143, 2-147
87738	2-81, 2-83
87816	2-97
9000351	2-143, 2-147
9000355	2-77
9000845	3-7, 3-9
9000846	3-3, 3-5
9000879	3-3, 3-5, 3-7, 3-9
9003345	5-3
9003390	2-47
9003391	2-51
9003635	3-19
9003805	3-7
9003865	3-3
9003933	3-43
9004070	3-11
9004077	1-2, 2-103
9004078	1-2, 2-107, 2-109
9004080	3-44
9004081	3-44
9004082	3-44
9004083	3-44
9004085	3-44
9004086	3-44
9004100	3-44
9004107	3-40
9004325	2-35
9004513	2-35
9004516	2-73
9004518	2-151
9004519	2-115, 2-117
9004520	2-67
9004521	2-67
9004524	2-17, 3-37
9004527	2-115, 2-117
9004528	2-33, 2-35
9004529	2-33
9004541	1-1
9004542	1-1
9004543	1-1
9004544	1-1
9004545	1-1, 2-33, 2-35
9004574	2-99
9004575	2-99
9004590	4-11
9004591	4-11
9004592	4-11
9004593	4-11
9004594	4-11
9004595	4-11
9004596	4-11
9004597	4-11
9004598	4-11
9004599	4-11
9004600	4-11
9004601	4-11
9004602	4-11
9004603	4-11
9004621	3-44

Part Number	Page Number
9004622	3-44
9004623	3-44
9004624	3-44
9004625	3-44
9004626	3-44
9004627	3-44
9004628	3-44
9004629	3-44
9004630	3-44
9004631	3-44
9004632	3-44
9004633	3-44
9004634	3-44
9004635	3-44
9004636	3-44
9004637	3-44
9004638	3-44
9004639	3-44
9004640	3-44
9004641	3-44
9004642	3-44
9004674	5-11
9004675	5-11
9004729	3-44
9004730	3-44
9004815	2-103, 2-105
9004865	2-95
9004867	2-95
9004868	2-95
9004869	2-95
9004870	2-95
9004871	2-95
9004873	2-95
9004940	1-1, 2-7, 2-9, 2-11
9005082	2-17
9006618	2-51, 6-30
9006619	2-47, 2-51, 6-28
9006620	2-55, 2-57, 6-29
9006634	2-41
9006635	2-41
9006886	2-81
9006895	2-41
9006917	2-67
9007088	2-67
9007131	3-3, 3-5, 3-7, 3-9
9007181	3-5
9007380	1-1, 2-55, 2-57, 6-29
9007384	1-1
9007385	1-1
9007423	2-51, 6-30
9007424	2-51, 6-30
9007552	2-55, 2-57
9007553	2-55, 2-57
9007972	2-113
9007973	2-31
9007974	2-23
9007975	2-23
9007976	2-27
9007977	2-15
9007978	2-15
9007979	2-15
9008178	3-44
9008193	6-29
9008195	3-41
9008197	2-41
9008198	3-9
9008199	3-5
9008200	3-21
9008229	2-73
9008624	2-123
9008697	2-89, 2-143, 2-147, 2-157
9008804	6-29
9008805	6-25, 6-29
9008806	6-30
9008807	6-30
9008808	6-30
9008919	2-125
9009218	3-23
9009219	3-23
9009220	3-27
9009247	2-123
9010085	3-42
9010086	3-42
9010202	2-69
9010203	2-69
9010215	6-22
9010217	6-20
9010219	6-20
9010222	6-17
9010223	6-17
9010224	6-17
9010225	6-17
9010226	6-17
9010227	6-17
9010228	6-17
9010229	6-17, 6-21
9010230	6-17
9010231	6-17
9010232	6-18
9010233	6-18
9010234	6-18
9010235	6-18
9010236	6-18
9010237	6-18
9010238	6-18
9010239	6-16, 6-18
9010240	6-18, 6-19
9010241	6-18
9010242	6-18
9010243	6-19
9010244	6-19
9010245	6-20
9010246	6-20
9010247	6-25
9010248	6-25
9010249	6-25
9010250	6-9
9010251	6-9
9010252	6-9
9010253	6-9, 6-21
9010254	6-9
9010255	6-25
9010256	6-25
9010257	6-25
9010258	6-25
9010259	6-25
9010260	6-25
9010261	6-25
9010262	6-16, 6-25, 6-29
9010263	6-25
9010264	6-25, 6-29
9010266	6-27, 6-28
9010267	6-28
9010268	6-27, 6-28
9010269	6-28
9010270	6-28
9010271	6-28
9010272	6-29
9010273	6-29
9010274	6-29
9010275	6-29
9010276	6-29
9010277	6-29
9010278	6-29
9010279	6-29
9010280	6-29
9010281	6-15
9010282	6-15
9010283	6-15
9010284	6-15
9010285	6-15
9010286	6-15
9010287	6-15
9010288	6-15
9010289	6-22, 6-23
9010290	6-22
9010291	6-22
9010294	6-22
9010295	6-22
9010296	6-16
9010297	6-16
9010298	6-16
9010302	6-16
9010303	6-16
9010305	6-23
9010306	6-23, 6-26
9010307	6-23
9010308	6-23
9010309	6-23
9010310	6-23
9010311	6-7
9010312	6-7
9010313	6-7
9010314	6-30
9010317	6-29
9010327	6-26
9010330	6-27
9010331	6-27
9010359	6-18

Part Number	Page Number
9010360	6-18
9010366	6-25
9010367	6-25
9010371	6-21
9010372	6-21
9010373	6-21
9010374	6-21
9010375	6-21
9010376	6-21
9010377	6-21
9010380	6-21
9010382	6-15
9010383	6-15
9010384	6-15
9010419	6-3
9010420	6-3
9010421	6-3
9010422	6-3
9010423	6-3
9010424	6-3
9010425	6-3
9010426	6-3, 6-12
9010427	6-3
9010428	6-3
9010429	6-3
9010430	6-3
9010431	6-3, 6-5
9010432	6-3
9010433	6-3
9010434	6-3
9010435	6-3
9010436	6-3
9010437	6-3
9010438	6-3
9010439	6-3
9010440	6-3
9010441	6-3, 6-5
9010442	6-3
9010443	6-3
9010444	6-3
9010445	6-3
9010446	6-3
9010447	6-3
9010448	6-3
9010449	6-3
9010450	6-3
9010451	6-3
9010452	6-3
9010453	6-3
9010454	6-3
9010455	6-3
9010456	6-3
9010457	6-3
9010458	6-3
9010459	6-3
9010460	6-4
9010461	6-4
9010462	6-4
9010463	6-4
9010464	6-4
9010465	6-4
9010466	6-4
9010467	6-5
9010468	6-5
9010469	6-5
9010470	6-5
9010471	6-5
9010473	6-5
9010479	6-5
9010480	6-5
9010481	6-5
9010482	6-5
9010483	6-5
9010484	6-5
9010485	6-5
9010487	6-7
9010488	6-7
9010489	6-7
9010490	6-7
9010491	6-7, 6-9
9010492	6-7
9010493	6-7
9010494	6-7
9010495	6-7
9010496	6-7
9010497	6-7
9010498	6-7
9010502	6-7
9010503	6-7, 6-13
9010504	6-7
9010505	6-7
9010506	6-7
9010507	6-7
9010508	6-7
9010511	6-7
9010512	6-7
9010513	6-10
9010514	6-10
9010515	6-10
9010516	6-10
9010517	6-10
9010518	6-10
9010519	6-10
9010520	6-10
9010521	6-10
9010522	6-10
9010523	6-10
9010524	6-10
9010525	6-10
9010526	6-10
9010527	6-10
9010528	6-10
9010529	6-10
9010530	6-9
9010531	6-9
9010532	6-9
9010533	6-9
9010534	6-9
9010535	6-9
9010536	6-9
9010537	6-9
9010538	6-9
9010539	6-9
9010540	6-9
9010541	6-9
9010542	6-9
9010543	6-9
9010544	6-9
9010545	6-9
9010546	6-9
9010547	6-9
9010548	6-9
9010549	6-9
9010550	6-9
9010551	6-9
9010552	6-9
9010554	6-9
9010555	6-9
9010556	6-9
9010557	6-9
9010559	6-9
9010560	6-9
9010561	6-9
9010562	6-9
9010563	6-9
9010564	6-9
9010565	6-9
9010567	6-9
9010568	6-9
9010569	6-9
9010570	6-11
9010571	6-11
9010572	6-11
9010574	6-11
9010575	6-11
9010576	6-11
9010577	6-11
9010578	6-11
9010579	6-11
9010580	6-11
9010582	6-12
9010583	6-12
9010585	6-12
9010586	6-12
9010587	6-12
9010589	6-12
9010590	6-12
9010591	6-12
9010592	6-12
9010593	6-12
9010594	6-12
9010595	6-12
9010596	6-12
9010597	6-12
9010598	6-12
9010599	6-12
9010600	6-11, 6-12
9010601	6-12
9010602	6-13
9010603	6-13

Part Number	Page Number
9010604	6-13
9010606	6-13, 6-15
9010607	6-13
9010609	6-13
9010610	6-13
9010612	6-13
9010613	6-15
9010615	6-15
9010617	6-15
9010618	6-15
9010619	6-16
9010622	1-1, 6-19
9010623	6-17
9010624	6-17
9010625	6-17
9010626	6-29
9010627	1-1, 6-21
9010628	6-21
9010629	6-21
9010630	6-21
9010631	6-21
9010632	6-22
9010633	6-22
9010634	6-30
9010910	6-22
9011154	2-145, 2-149, 2-159, 2-161
99321	1-2
99997	2-91

PART DESCRIPTION TO PAGE NUMBER CROSS REFERENCE LIST

A

Actuator [Mit , Bosch], 6-27, 6-28
Actuator, Valve, Bypass, 4-17, 4-19
Adapter [E100 Mixer Gm 1.6l 2010], 2-47, 2-51
Adapter [E100 Mixer Gm1.6l 2010/Mit], 6-28, 6-30
Adapter, Filter, Oil, Remote [Mit], 6-21
Adapter, Intake, Throttle Body, 2-47, 2-51
Adapter, Valve, 400mm [Bosch], 2-51
Adaptor Assy, Pump, Hyd, 4-17, 4-19
Adjuster Assy, Lash, 6-9
Adjuster Kit, Manual, W/ Pivot, 2-95
Alarm Assy, Backup, 12-24vdc 82-107dba, 3-3, 3-5, 3-7, 3-9
Alternator, 12vdc 075a [Multi Grv], 2-67
Alternator, 7si [Mit Df Sur-Belt], 6-20
Angle, 2-133, 3-11
Angle Wldt, Bmpr, Tower, Lh, 3-40, 3-41
Angle Wldt, Bmpr, Tower, Rh, 3-40, 3-41
Angle, Guide, 2-21, 2-111
Angle, Keeper, Cable, 2-135
Angle, Mtg, Ground, 3-33, 3-35
Angle, Mtg, Stl, .19 2.3 3.7 01.0l 3hole, 2-25
Angle, Sppt Wldt, Hinge, 2-21
Antenna, Telem, 110 In [Gprs], 3-42
Arm Assy, Rocker [A], 6-9
Arm Assy, Rocker [B], 6-9
Arm Assy, Rocker [C], 6-9
Arm Wldt, Brush, Main, Drive, Lh, 2-139
Arm Wldt, Brush, Side, 2-129, 2-133, 3-11
Arm Wldt, Lever, 2-127
Arm Wldt, Neutral, 2-101
Arm Wldt, Safety, 2-111
Arm, Alternator, Adj [Mit 2013], 2-69
Arm, Brush, Main, W/ Label, 2-139
Arm, Brush, Side, 2-129
Arm, Lift, Hppr, W/ Label, Replmt, 2-115, 2-117
Arm, Linkage, Side Brush, 2-133, 3-11
Arm, Rocker, Valve, 5-3
Arm, Safety, Hppr, W/ Label, Replmt, 2-115, 2-117
Arm, Wiper, Windshield, 3-23
Armrest, Rh, 2-19

B

Ball, Camshaft, 5-11
Bar, Flat, Ss 0.12 01.00 X 18.5l, 4/0.5h, 2-115
Bar, Flat, Stl 0.19, 01.50 X 04.1l, 2-89
Bar, Tensioner, Mtg [Mit 2.0/2.4l], 6-17
Battery, Wet, 12vdc 0475cca, 2-67, 2-71
Bearing Kit [Cl], 4-5
Bearing Kit, Cshft, 1.989-1.995mm (Brown), 5-5
Bearing Kit, Cshft, 1.989-1.995mm (Green Blue), 5-5
Bearing Kit, Cshft, 1.995-2.001mm (Brown Blue), 5-5
Bearing Kit, Cshft, 1.995-2.001mm (Green), 5-5
Bearing Kit, Cshft, 2.114-2.120mm, 5-5
Bearing Kit, Cshft, 2.120-2.126mm, 5-5
Bearing Kit, Rod, Connecting, Std, 5-5
Bearing, Ball, 8mmb X 22mmd X 7mmw, 2-101
Bearing, Ball, 1.38b 2.83d 0.67w, 2-139
Bearing, Ball, 20mm B 42mm D 12mm W, 2-67
Bearing, Cone, 1.38b 0.71w, 2-89, 2-93, 2-95
Bearing, Cone, Pump, Hyd, 4-17, 4-19
Bearing, Cshft [Black Std 3], 6-3
Bearing, Cshft [Green Std 3], 6-3
Bearing, Cshft [Lan Std 1,2,4,5], 6-3
Bearing, Cshft [Lan Std 3], 6-3
Bearing, Cshft [No Color Std 3], 6-3
Bearing, Cshft [Red Std 1,2,4,5], 6-3
Bearing, Cshft [Yellow Std 3], 6-3
Bearing, Cshft [Green Std 1,2,4,5], 6-3
Bearing, Cshft [Yellow Std 1,2,4,5], 6-3
Bearing, Cshft[No Color Std 1,2,4,5], 6-3
Bearing, Cup, 4-17, 4-19
Bearing, Cup, 2.56d 0.55w, 2-89, 2-93, 2-95
Bearing, Flng, 0.75b 1.00d 0.75l, Bnz, 2-101
Bearing, Flng, 2hole, 0.50b, 2-39
Bearing, Flng, 2hole, 0.50b [Nyl], 2-39
Bearing, Flng, 2hole, 0.75b, 2-97
Bearing, Journal-1.25 I.D. X .75 Lg, 2-107, 2-109
Bearing, Oversize [1.0], 6-3
Bearing, Rod, Connect [Lan Std], 6-10
Bearing, Rod, Connect [No Color Std], 6-10
Bearing, Rod, Connect [Yellow Std], 6-10
Bearing, Self Align, 1.25b 2.00d, 2-115, 2-117
Bearing, Shaft, Balancer [Ovrsz], 6-3
Bearing, Shaft, Std, Balancer, 6-3
Bearing, Std, Balancer, 6-3
Bearing, Thrust, 0.66b 1.25d 0.06w, 2-135
Bearing, Thrust, Cshft, 6-3
Bearing, Thrust, Motor, Hyd, 4-2, 4-3
Bearing, Thrust, Pump, Hyd, 4-17, 4-19
Bearing, W/ Collar, 0.75b 1.85d 1.06w, 2-139
Belt, Ribbed, 38.5l, 2-67
Belt, Ribbed, 39.0l, 1-1
Belt, Ribbed, 55.1l, 1-1, 3-33
Belt, Ribbed, Alternator, 40.25l, 2-69
Belt, Ribbed, Alternator, A/C, 51.125l, 3-35
Belt, Timing, 6-9, 6-11
Belt, Timing [Gm1.6l], 5-11
Bezel, Switch [3 Gang], 2-33, 2-35
Blade, Wiper, Windshield, 3-23
Block Assy, Cylinder, 6-3
Block, Short, Eng, W/ Piston & Ring, 5-5
Block, Spacer, Hinge, 3-15
Blown, Fan, Motor, 4-11
Bolt, 6-7, 6-21
Bolt Kit, M10 X 1.50 X 16, Thin, 2-37
Bolt, 3/8-16 X 1 1/4 Hxhd [Mit], 6-17
Bolt, 3/8-16 X 4.5 [Mit], 6-17
Bolt, Belt, Balancer, Train, 6-11
Bolt, Bracket, Sensor,Cshft Position, 5-7
Bolt, Bracket,Screen,Oil Pump,M6x1x1, 5-7
Bolt, Camshaft Cover, 5-3
Bolt, Cap, Bearing, 6-3
Bolt, Carriage, M8 X 1.25 X 30, 1-2, 2-103, 2-105
Bolt, Carriage, M8 X 1.25 X 40, 2-7
Bolt, Connecting, 6-10
Bolt, Connecting Rod, 5-5
Bolt, Cover, Camshaft, M6 X 1 X 22, 5-11
Bolt, Cover, Oil Pump, M6 X 14, 5-7
Bolt, Cover, Water Pump, 5-7
Bolt, Eng Cover, M6 X 1 X 13, 5-11
Bolt, Eye, M10 X 1.50 X 117mm, 08.00 Eye, 2-137
Bolt, Flange, 6-3, 6-5, 6-7, 6-9, 6-11, 6-12, 6-13, 6-15
Bolt, Flywheel, 5-5
Bolt, Flywheel [Mit 20/24m], 6-18
Bolt, Head. Cyl, 5-3
Bolt, Hold-Down, Battery 08.5l, 2-67, 2-71
Bolt, Hsng, Thermostat, 5-3
Bolt, M08 X 1.25 X 25mm, 5-5
Bolt, M10 X 1.50 X 75mm, 5-5
Bolt, M10-1.25 X 20 Hxhd [Mit], 6-25
Bolt, M10-1.25 X 30 Soc Hd [Mit], 6-18
Bolt, M10-1.25 X 45 Soc Hd [Mit], 6-18
Bolt, M10-1.50 X 30 [Mit], 6-20
Bolt, M12-1.75 X 25, Hex Hd [Mit], 6-18
Bolt, M6-1.0 X 10 Fl Hd [Mit], 6-16, 6-25, 6-29
Bolt, M6-1.0 X 12 Fl Hd Pl [Mit], 6-25
Bolt, M6-1.0 X 16 Fl Hd [Mit], 6-25
Bolt, M6-1.0 X 20 Fl Hd [Mit], 6-18, 6-19
Bolt, M6-1.0 X 25 Soc Hd [Mit], 6-28
Bolt, M6-1.0 X 30 Fl Hd [Mit], 6-25
Bolt, M6-1.0 X 45, Skt Hd [Mit], 6-27
Bolt, M6-1.0 X 85 Soc Hd [Mit], 6-28
Bolt, M8-1.25 X 12 [Mit], 6-23
Bolt, M8-1.25 X 15, Hx Hd [Mit], 6-18
Bolt, M8-1.25 X 16 Fl Hd [Mit], 6-29
Bolt, M8-1.25 X 16, Soc Hd [Mit], 6-26
Bolt, M8-1.25 X 20 Fl Hd [Mit], 6-17
Bolt, M8-1.25 X 25 [Mit], 6-17, 6-21
Bolt, M8-1.25 X 25 Flg Hd [Mit], 6-23
Bolt, M8-1.25 X 25 Soc Hd [Mit], 6-17
Bolt, M8-1.25 X 55 Fl Hd [Mit], 6-9
Bolt, M8-1.25 X 65 Hxhd [Mit], 6-9
Bolt, M8-1.25 X 70 Hxhd [Mit], 6-9, 6-21
Bolt, Manifold, Inlet, 6-15

Bolt, Motor, Hyd, 4-13, 4-15
Bolt, Oil Pump Screen/Camshaft Cover, 5-7
Bolt, Pan, Oil, 5-8
Bolt, Pulley, Cshft, 5-5
Bolt, Pump, Oil, 5-7
Bolt, Retainer, Camshaft, M6 X 1 X 16, 5-11
Bolt, Rocker, Cover, 6-4
Bolt, Seal, 6-9
Bolt, Sensor, Position, Cshft, 5-7
Bolt, Shield, Manifold, Exhaust, 5-9
Bolt, Shld, .25d X 1.25, #10-24, 2-97
Bolt, Shld, .31d X 1.00, .25-20, 2-101
Bolt, Shld, 1.37d X 5.13l,1.1-18 Drilled, 2-89
Bolt, Soc Head, M5 X 80 X 35, 2-51
Bolt, Sprocket, Camshaft, M10x1.25x60, 5-11
Bolt, Sprocket, Cshft, 6-10
Bolt, Tensioner [Gm], 5-11
Bolt, Tensioner, Timing Belt,M8x1.25x48, 5-11
Bolt, Tube [Pvc], M6 X 1 X 15, 5-3
Bolt, Washer, 6-9, 6-10, 6-12, 6-17
Boot, 90deg .50id 1.00id 2.50l, Red, 2-67, 2-71, 3-29, 3-31
Boot, Bellows, 3.1l 4.4w 2.8h 1hole, Neo, 2-39
Boot, Terminal, Battery, 02-01ga, Blk, 2-67, 2-71
Boot, Terminal, Battery, 02-01ga, Red, 2-67, 2-71
Box, Instrument, Ii, Trimmed, 2-33, 2-35
Box, Pre-Filter, Lower, Trimmed, 2-121
Box, Pre-Filter, Upper, 3 X 4, Trimmed, 2-121
Brace Wldt, 2-21
Brace Wldt, Sppt, 2-23
Brace Wldt, Sppt [Gm 2010], 2-21
Bracket Assy, Coil, Ignition, 6-7
Bracket Kit, Alternator, Repair, 2-67
Bracket Wldt, 2-127
Bracket Wldt, Alternator [S30 Mit2013], 2-69
Bracket Wldt, Alternator, Lower [Gm1.6l], 2-67
Bracket Wldt, Brush, Side, 2-127
Bracket Wldt, Light, Flsh, 3-3, 3-7
Bracket Wldt, Linkage, Propel, 2-101
Bracket Wldt, Linkage, Propel [Mits], 2-101
Bracket Wldt, Mtg, Bmpr, 3-40, 3-41
Bracket Wldt, Mtg, Compressor, 3-33, 3-35
Bracket Wldt, Mtg, Cyl, 2-137
Bracket Wldt, Mtg, Eng, Front, 2-43, 2-45
Bracket Wldt, Mtg, Eng, Rear [Mit 2013], 2-43, 2-45
Bracket Wldt, Mtg, Motor, 2-83
Bracket Wldt, Mtg, Muffler [Mit 2013], 2-75
Bracket Wldt, Mtg, Radiator, 2-81, 2-83
Bracket Wldt, Mtg, Reg, Lpg[Gm 2010], 2-55, 2-57
Bracket Wldt, Mtg, Regulator, Lpg, 2-55
Bracket Wldt, Mtg, Shakr, 2-125
Bracket Wldt, Radiator, 2-83
Bracket Wldt, Reservoir, Hyd, 2-151
Bracket Wldt, Sppt, Cover, Rear, Rh, 2-23
Bracket Wldt, Sppt, Radiator, Rh, 2-83
Bracket Wldt, Steering, Tilt, 2-39
Bracket Wldt, Tank, Lpg, 2-79
Bracket Wldt, Wand, 3-17
Bracket, Mtg, Cover, 3-23
Bracket, Alarm, Backup, 3-5, 3-9
Bracket, Anchor, Strap, Alternator, 2-67
Bracket, Angle, Hold-Down, Battery, 2-67, 2-71
Bracket, Angle, Keeper, Cable, 2-93, 2-127
Bracket, Angle, Lintel, 2-27
Bracket, Angle, Mtg, Relief Valve, 2-79
Bracket, Angle, Mtg, Seat, 2-17, 2-19
Bracket, Brush, Stop Adj, 2-137
Bracket, Coil [Mit 2.0/2.4l], 6-19
Bracket, Coil, Mtg, 4-11
Bracket, Exhaust, 2-73
Bracket, Filter, Oil, Remote [Mit], 6-21
Bracket, Flap, Recirculation, 2-7
Bracket, Grill, 2-21, 2-23
Bracket, Handle, Latch, 3-27
Bracket, Hinge, 3-17
Bracket, Indicator, Timing, 6-9
Bracket, Latch, Cover, Top, 2-27
Bracket, Latch, Lh, 2-111, 2-113
Bracket, Latch, Rh, 2-111, 2-113
Bracket, Latch, Shrd, 2-23
Bracket, Latch, Shrd, Seat, 2-15
Bracket, Latch, Side, Door, 2-31
Bracket, Lift, 2-135
Bracket, Light, 3-5, 3-9
Bracket, Mtg, Air Deflector, 3-17
Bracket, Mtg, Air-Clnr, 2-21, 2-59, 2-61, 2-63, 2-65
Bracket, Mtg, Alternator [S30 Mit 2013], 2-69
Bracket, Mtg, Cab, 3-23
Bracket, Mtg, Cntrl, Eng, 2-47, 2-51
Bracket, Mtg, Condenser, 2-83
Bracket, Mtg, Cooling Shrd, 2-81
Bracket, Mtg, Eng, 2-41
Bracket, Mtg, Fan Shrd, 2-73, 2-75, 2-81
Bracket, Mtg, Filter, 2-121
Bracket, Mtg, Filter, Rh, 2-121
Bracket, Mtg, Fltr, 2-123
Bracket, Mtg, Heat Shield, 2-73
Bracket, Mtg, Lh, 2-139
Bracket, Mtg, Mirror, 3-19, 3-21, 3-23
Bracket, Mtg, Mirror, Lower, 3-23
Bracket, Mtg, Mirror, Upper, 3-23
Bracket, Mtg, Motor, Side Brush, 2-129, 2-131, 3-11
Bracket, Mtg, Rh, 2-139
Bracket, Mtg, Shield, Outlet, 2-75
Bracket, Mtg, Switch, 2-115, 2-117
Bracket, Mtg, Tank, 2-81
Bracket, Mtg, Tank [Gm 2010], 2-81
Bracket, Mtg, Telem [S30], 3-42
Bracket, Mtg, Tube, 3-15, 3-17
Bracket, Mtg, Wand, 3-15, 3-17
Bracket, Prop, Rod, Cover, 2-27
Bracket, Pulley, Tensioner, 6-9
Bracket, Pump, Mtg, 6-17
Bracket, Retainer, Dust Seal, 2-121
Bracket, Retainer, Safety, 2-101
Bracket, Retainer, Seal, 2-9, 2-11
Bracket, Retaining, Wire, Sparkplug, 5-12
Bracket, Screen, Oil Pump, 5-7
Bracket, Seal, Chute, 2-107, 2-109
Bracket, Seal, Lh, 2-103, 2-105
Bracket, Seal, Rh, 2-103, 2-105
Bracket, Sensor, Position, Cshft, 5-7
Bracket, Skirt, 2-9, 2-11
Bracket, Sppt, 3-33, 3-35
Bracket, Sppt, Cover, Rear, Lh, 2-23
Bracket, Sppt, Hppr Seal, 1-2, 2-103, 2-105
Bracket, Sppt, Hyd Tube, 2-157
Bracket, Sppt, Ohg, 3-19
Bracket, Sppt, Prop, Rod, 2-27
Bracket, Sppt, Radiator, 2-83
Bracket, Sppt, Rear, Shrd, 2-23
Bracket, Sppt, Shrd, Rear, Lower, Lh, 2-23
Bracket, Sppt, Shrd, Rear, Lower, Rh, 2-23
Bracket, Sppt, Shrd, Rear, Upper, Lh, 2-23
Bracket, Support, Hinge, 2-103
Bracket, Switch, 2-135, 2-137
Bracket, Switch, Reverse, 3-3, 3-5, 3-7, 3-9
Bracket, Tensioner, [Mit 2.0/2.4l], 6-17
Bracket, U, .12, 1.2w 2.3 1.0l, 2/0.6h, 2-127
Bracket, U, .19, 2.8w 0.9 1.0l, 1/0.3h, 2-139
Bracket, Vaporizer [Mit 20/24m Tilt], 6-29
Brake Assy, Drum, Mech, 07.9d [6600]], 2-93
Brake Kit, Repair, 2-93
Brake Wldt, Parking, 2-97
Brake, Knot, Lh, 7.0d, 2-95
Brake, Knot, Rh, 7.0d, 2-95
Brush, Disk, Swp, 25.4 D, Flat Wire, 2-5
Brush, Disk, Swp, 26.0 D, Nylon, 2-5
Brush, Disk, Swp, 26.0 D, Polypropylene, 2-5
Brush, Swp, 45L, 5 Double Row Patrol, Nylon, 2-5
Brush, Swp, 45L, 8 Double Row, Nylon, 2-5
Brush, Swp, 45L, 8 Double Row, Polypropylene, 2-5
Brush, Swp, 45L, 8 Double Row, Polypropylene & Wire, 2-5
Brush, Swp, 45L, 8 Double Row, Wire, 2-5
Brush, Swp, 45L, 24 Single Row, Natural Fiber & Wire, 2-5

Brush, Swp, 45L, 24 Single Row, Nylon, 2-5
Brush, Swp, 45L, Sand Wedge, Polypropylene, 2-5
Brush, Swp, 45L, Window , Polypropylene, 2-5
Bumper Kit, Corner, Ci, [S30], 3-40, 3-41
Bumper Wldt, Front, 2-115, 2-117
Bushing, 6-3, 6-5
Bushing, Flng, 0.44b 1.25d 0.25l, 2-135, 2-137
Bushing, Knock, 6-3
Bushing, Sleeve, 0.31b 0.55d 0.38l, Oib, 2-99
Bushing, Sleeve, 0.37b 0.50d 0.50l, Oib, 2-97
Bushing, Sleeve, 0.50b 0.59d 0.38l, Stl, 2-127
Bushing, Sleeve, 0.50b 0.59d 0.62l, Fgl, 2-133, 3-11
Bushing, Sleeve, 1.00b 1.13d 0.99l, Fgl, 2-115, 2-117
Button, Cntrl, Horn, 2-37, 2-39

C

Cable, 06ga 13.0l Blk, 2-41, 2-43, 2-45
Cable, 06ga 16.0l Red .38ring /.38ring, 2-67
Cable, Battery, 02ga 33.0l Red .38ring, 2-67
Cable, Battery, 02ga 36.0l Blk .38ring, 2-67
Cable, Battery, 2ga, 70l, Black, 2-71
Cable, Battery, 2ga, 70l, Red, 2-71
Cable, Brake, 2-93
Cable, Glv .09d 013.0l .38eye /.38eye, 2-81
Cable, Glv .13d 010.0l .52eye /.52eye, 3-40, 3-41
Cable, Glv .13d 063.4l .50eye / M10, 2-127
Cable, Glv .19 24.5l .3 Eye / M10, 2-135
Cable, Glv .19d 009.88l .38eye / M10, 2-137
Cable, Push / Pull, 062.5l M6x1.0/M6x1.0, 2-101
Cable, Push / Pull, 070.4l M6x1.0/M6x1.0, 2-99
Cam, 4-17, 4-19
Cam, Sensor, Wheel [Mit 2.0/2.4l], 6-25
Camshaft, 5-11
Camshaft Assy, 6-9
Cap, Breather, Hyd (CE Only), 2-151
Cap, Breather, Hyd, 2.4 Ds, 1-1, 2-151
Cap, Enclosure, Hose, 3-15, 3-17
Cap, End, Motor, Hyd, 4-3
Cap, End, Valve, Steering, 4-5
Cap, Filler, Oil, W/ Org, 5-3
Cap, Fuel, Tank, 2-77
Cap, Hub, Dust, 2.57d 0.77l, 2-93, 2-95
Cap, Oil, Filler, 6-4
Cap, Radiator, 14psi [Stant Ao-2516], 2-81, 2-83
Cap, Rubber, 5/8id [Mit 2.0/2.4l], 6-22
Cap, Screw, Strg Valve, 4-2
Cap, Seal, 6-3
Cap, Spring, Valve, 5-3
Cap, Valve, Tire, Tubeless [Schrader], 2-91, 2-95
Cap, Vinyl, 3.28d 0.45l, 2-139
Channel, 2-13, 2-15
Channel, .12, 1.5w 0.5 44.6l, 3/0.4h, 2-7
Channel, Mtg, Fan Motor, 2-81
Clamp, 0.75d [Mit], 6-25
Clamp, 1/4 Hole [Mit #20], 6-25
Clamp, 3/8id [Mit Olive Green], 6-15
Clamp, Bridge, 5.0, 3-17
Clamp, Cable, Nyl, 0.62d, Nat, 3-42
Clamp, Cable, Ss, 2.50d X 1.00w, 1hole, 2-89, 2-107, 2-109, 2-129, 2-131
Clamp, Cable, Stl, 0.38d X 0.38w, 1hole, 2-7
Clamp, Cable, Stl, 0.63d X 0.75w, 1hole, 2-113
Clamp, Cable, Stl, 0.75d X 0.75w, 1hole, 2-157
Clamp, Cable, Stl, 1.00d X 0.75w, 1hole, 2-55
Clamp, Cable, Stl, 1.50d X 0.75w, 1hole, 2-85, 2-87
Clamp, Cable, Stl, 1.50d X 1.00w, 1hole, 2-121
Clamp, Cable, Stl, 1.75d X 1.00w, 1hole, 2-107, 2-129, 2-131, 3-11
Clamp, Cable, Stl, 2.00d X 0.75w, 1hole, 2-77
Clamp, Hose, 1.0, 2-55, 2-57
Clamp, Hose, 1.75 [Pcv], 5-3
Clamp, Hose, Spring Stl, 0.58d X 0.31w, 2-49, 2-53
Clamp, Hose, Spring, 0.62d, 2-55, 2-57, 6-22, 6-29
Clamp, Hose, Spring, 0.75d, 2-55, 2-57
Clamp, Hose, Wormdrive, 0.25-0.62d, .31w, 2-47, 2-55, 2-77, 2-81, 2-83
Clamp, Hose, Wormdrive, 0.56-1.06d, .56w, 2-47, 2-55, 2-57, 2-59, 2-63, 3-29, 3-31
Clamp, Hose, Wormdrive, 1.06-2.00d, .56w, 2-85
Clamp, Hose, Wormdrive, 1.25-2.00d, .50w, 2-85, 2-87
Clamp, Hose, Wormdrive, 1.56-2.50d, .50w, 2-85, 2-87
Clamp, Hose, Wormdrive, 1.81-2.75d, .50w, 2-59, 2-61, 2-63, 2-65
Clamp, Hose, Wormdrive, 2.50-3.50d, .50w, 3-33, 3-35
Clamp, Hose, Wormdrive, 3.75-4.62d, .62w, 3-15, 3-17
Clamp, Mtg, Fltr, Air, 2-59, 2-61, 2-63, 2-65
Clamp, Muffler, 1.62d, 2-73, 2-75
Clamp, Tension [Mit #29], 6-29
Clamp, Tube, 0.37d 0.50d, 2 Hole, 2-157
Clamp, Tube, 0.50d 0.50d, 2 Hole, 2-157
Clevis Wldt, Adj, .50pin 0.50-20, Pl, 2-93
Clevis, Adj, 0.38pin, 0.50-20thd, 2-93
Clevis, Adj, 0.38pin, M10x1.5, 2-127, 2-135, 2-137
Clevis, Adj, M6 Pin, M6 X 1.0 Rh, Pl, 2-99
Clip, .250h, Plstc [Pine-Tree], 2-13, 2-15, 2-111
Clip, Grip, Hose, 0.75-1.12, Stl,Blk Vyl, 2-43, 2-45
Clip, Keeper, Blower Mtg, 4-11
Clip, Keeper, Open, 3-11
Clip, Rod, Cab, 3-27
Clip, Spring, 2-95
Clip, Spring, Prop Arm, 2-115, 2-117
Coil, Heater / Evaporator, 4-11
Coil, Ignition, 5-12
Coil, Ignition [Mit 2.0/2.4l], 6-19
Column, Steering, 09.9l 0.86d 36tooth, 2-39
Column, Steering, Tilt, 2-37
Compressor, A/C, 6v Pully [134, Tm-08hd], 3-33, 3-35
Condenser, Ac, 3-33, 3-35
Connector, Fuel, E90, Qf, 2-77
Connector, Fuel, Qf, 2-77
Contact Kit, W/ Brush [En], 2-39
Control Box Assy Kit, Replmt, Telem[Can], 3-42
Control Box Assy Kit, Replmt, Telem[Usa], 3-42
Controls, Ac/Heater [S30], 3-25
Cooler, Hyd, 18gpm 400btu Of12 20x8x2, 2-153
Cord, Sponge, 1-2, 2-107, 2-109
Coupling, Drive, 13t, 2-41
Coupling, Flywheel [Mit20/24m], 6-18
Cover, 4-11, 6-5
Cover Assy, Front, Upper [T-Belt], 6-7
Cover Assy, Hppr, 2-111
Cover Assy, Rear, 2-21
Cover Assy, Rocker, 6-4
Cover Wldt, Top, 2-25
Cover, Access, 4-11
Cover, Belt, Timing, Lower Front, 5-11
Cover, Belt, Timing, Upper Front, 5-11
Cover, Dust [Mit 2.0l], 6-18
Cover, End, 4-17, 4-19
Cover, Fuse, 3-25
Cover, Gas, W/ Label, Replmt, 2-17, 3-37
Cover, Hose, 2-55, 2-57
Cover, Hose, Plstc, Cab, 3-23
Cover, Hppr, Rotomold, Afmkt [S30], 2-113
Cover, Hsng, Camshaft, 5-3, 5-11
Cover, Hsng, Flywheel Rep.by9006895, 2-41
Cover, Latch, 3-27
Cover, Lntl, Lh, 2-13
Cover, Lntl, Lh, Rotomold, Afmkt [S30], 2-15

Cover, Lntl, Rh, 2-13
Cover, Lntl, Rh, Rotomold, Afmkt [S30], 2-15
Cover, Lower, Front [T-Belt], 6-7
Cover, Lpg, 2-17, 3-37
Cover, Pump, Oil, 5-7
Cover, Rear [T-Belt], 6-7
Cover, Rear, Lh, Rotomold, Afmkt [S30], 2-23
Cover, Rear, Rh, Rotomold, Afmkt [S30], 2-23
Cover, Seat, Rotomold, Afmkt [S30], 2-15
Cover, Seat, Trimmed, 2-15
Cover, Side, Lh, 2-29
Cover, Side, Rh, 2-13
Cover, Side, Rotomold, Afmkt [S30], 2-31
Cover, Timing, Gear [Mit 2.0/2.4l], 6-9
Cover, Top, Rotomold, Afmkt [S30], 2-27
Crankshaft, 5-5
Crankshaft Assy, 6-10
Cylinder Assy, Head, Bolt, 6-5
Cylinder, Hyd, 1.5b 06.3l 01.50strk 2500, 2-133, 3-11
Cylinder, Hyd, 2.0b 08.0l 04.00strk 2500, 2-107, 2-109, 2-137
Cylinder, Hyd, 2.0b 15.0l 08.00strk 1500, 2-89
Cylinder, Hyd, 2.5b 28.6l 18.62strk 3000, 2-115, 2-117

D

Deflector, Air, 3-17
Diode, Ele, Plug, 2-33, 2-35
Diode, Ele, Plug (CE Only), 2-193
Dipstick Assy, Guage, 6-3
Dipstick, Guage, Guide, 6-3
Dipstick, Oil, 5-8
Dipstick, Rod, Guage, 6-3
Disc, 0.06, 04.39d 01.67b, 4/.30h 3.8bc, 2-139
Disc, 0.08, 04.39d 02.56b, 4/.28h 3.8bc, 2-139
Door Assy, Hppr, Vac Wand, 3-15
Door Wldt, 2-103, 2-105
Door Wldt, Brush, Lh, 2-11
Door Wldt, Brush, Rh, 2-9
Door Wldt, Dust, 2-107, 2-109
Door Wldt, Hppr, 2-103, 2-105, 2-107, 2-109, 3-15
Door Wldt, Rh, 3-27
Door Wldt, Shakr, 2-125
Door Wldt, Vacuum, 3-15
Door, Access, 2-17, 2-19, 2-81
Door, Vacuum, 3-15
Drain, Water, Joint, 6-3
Drive, Motor, Hyd, 4-2, 4-3, 4-13, 4-15
Driveshaft, Pump, Hyd, 4-17, 4-19
Drum Assy, Brake, 2-95
Dryer, A/C, 3-33, 3-35
Duct Wldt, Chute, Dust, 34 Deg, 2-123
Duct, Outlet, Vacuum, 2-123
Duct, Vyl, 0.74 X 1.50 .75d Max 48.0l, 2-111

E

Elbow, 6-21
Elbow, 1/8m X 1/8f, 90 [Mit], 6-15
Element, Fltr, Air [Dn], 1-1, 2-59, 2-61, 2-63, 2-65
Element, Fltr, Air, Safety, 1-1, 2-59, 2-61, 2-63, 2-65
Element, Fltr, Oil, Eng, Spin-On, 2-41
Element, Fltr, Oil, Eng, Spin-On (GM), 1-1, 5-8
End Cap, Motor, Hyd, 4-2
Engine, Block, Long [Gm1.6l] (See Engine Breakdown), 2-41
Engine, Gas [Mitsubishi] (See Engine Breakdown), 2-43
Engine, Lpg [Mitsubishi] (See Engine Breakdown), 2-45
Extinguisher Kit, Fire, Ci [S30], 3-43
Extinguisher, Fire, 2.5 Lb Dry, 3-43

F

Fan, Cooling, 14.1d, 6 Blade, 0.5b Taper, 2-81, 2-83
Fastener, Wire, Tie [Button Head], 2-33, 2-35
Filter, 4-11
Filter Assy, Air, 2-63
Filter Assy, Cyl, Dust, Replmt [S30], 2-125
Filter Assy, Hyd, 10mic, 1-1, 2-151
Filter Kit, Fuelock, Lpg, 1-1, 2-55
Filter Kit, Fuelock,Lpg, 1-1
Filter Kit, Fuelock,Lpg[Gm1.6l 2010], 1-1, 2-55, 2-57, 6-29
Filter, Air, 2.0 Inlet, Str, 2-59, 2-61, 2-65
Filter, Cyl, 11.09d, 13.31l, 6.6 Id, 1-1
Filter, Fuel [Gm 1.6l/3.0l], 1-1, 2-77
Filter, Oil (Mits), 6-21
Filter, Oil, (Mits), 1-1
Fitting Kit [Epr], 2-55, 2-57
Fitting, 1/2 Mpt X 5/8bh 90deg [Mit], 6-23
Fitting, 1/2 X 5/8 Hose,Plastic[Mit], 6-29
Fitting, 1/4mpt X 1/4mpt, 90deg[Mit], 6-29
Fitting, 1/8 Mpt X 3/8 Hb [Mit], 6-15
Fitting, 37deg [Mit], 6-7
Fitting, Adapter, Orifice, Pf06/Pm06, 2-47, 2-49, 2-53, 2-57
Fitting, Barb, 3/4" [Epr], 6-30
Fitting, Brs, Breather [02mp], 2-123
Fitting, Brs, E45, Pf02/Pm02, 2-41
Fitting, Brs, E90, Bm06/Pm04, 2-53
Fitting, Brs, E90, Em05/Pm04, 2-77
Fitting, Brs, E90, Em10/Pm06, 2-47, 2-55, 2-57
Fitting, Brs, Qdc, Pf04, Lpg Fem, 2-79
Fitting, Brs, Str, Bm03/Pm02, 2-123
Fitting, Brs, Str, Bm06/Pm02, 2-49
Fitting, Brs, Str, Bm06/Pm06, 2-49, 2-53
Fitting, Brs, Str, Em10/Pm06, 2-47, 2-57
Fitting, Brs, Str, Pf02/Pm02 [Bspt], 2-49
Fitting, Brs, Str, Pf04/Pf04, Bh, 2-79
Fitting, Brs, Str, Pf04/Pm02, 2-47, 2-55
Fitting, Brs, Str, Pf06/Pm04, 2-49, 2-53
Fitting, Brs, Str, Pf06/Pm08, 2-47, 2-57
Fitting, Brs, Str, Pm02, Service, 2-59, 2-61, 2-63, 2-65
Fitting, Draincock, .25npt, 2-85, 2-87
Fitting, Draincock, E90, .25npt, 2-47, 2-55
Fitting, E90, 2-51, 6-22
Fitting, E90, Bm10/Pm08, 4-11
Fitting, Fltr, Oil, 5-8
Fitting, Fuel [Mixer E100lp 2010], 2-51
Fitting, Fuel, Str, 0.38-24 [07 Eng], 2-77
Fitting, Fuel, Str, 0.56-18 [07 Eng], 2-77
Fitting, Grease, Str Pm04 .47l, 2-115, 2-117
Fitting, Grease, Str Pm04 .63l, 2-89
Fitting, Hyd, Cap, Jf06, 2-153, 2-155
Fitting, Hyd, E45, Ff04/Fm04, 3-11
Fitting, Hyd, E45, Fm04/Om06, 2-123
Fitting, Hyd, E45, Jf04/Jm04, 3-12
Fitting, Hyd, E45, Jm04/Om06, 2-123
Fitting, Hyd, E45, Pf04/Pm04, 2-79
Fitting, Hyd, E90, Ff06/Fm06, 3-11
Fitting, Hyd, E90, Fm04/Om04, 2-107, 2-109, 2-133, 2-137, 3-11
Fitting, Hyd, E90, Fm04/Om06, 2-115, 2-117, 2-151
Fitting, Hyd, E90, Fm06/Om06, 2-89
Fitting, Hyd, E90, Fm06/Om08, 2-159, 2-161
Fitting, Hyd, E90, Fm08/Om08, Med, 2-139
Fitting, Hyd, E90, Fm10/Om08, 2-157
Fitting, Hyd, E90, Fm10/Om12, 2-151, 2-157
Fitting, Hyd, E90, Fm12/0m08, 2-157
Fitting, Hyd, E90, Fm12/Om12, 2-151, 2-155
Fitting, Hyd, E90, Fm16/Om12, 2-155
Fitting, Hyd, E90, Fm20/Om20, 2-151
Fitting, Hyd, E90, Jf06/Jm06, 3-11
Fitting, Hyd, E90, Jm04/Om04, 2-107, 2-109, 2-133, 2-137, 3-11
Fitting, Hyd, E90, Jm04/Om06, 2-115, 2-117, 2-151
Fitting, Hyd, E90, Jm06/Om06, 2-89
Fitting, Hyd, E90, Jm06/Om08, 2-159, 2-161
Fitting, Hyd, E90, Jm08/Om08, Med, 2-139
Fitting, Hyd, E90, Jm10/Om08, 2-157
Fitting, Hyd, E90, Jm10/Om12, 2-151
Fitting, Hyd, E90, Jm12/0m08, 2-157
Fitting, Hyd, E90, Jm12/Om12, 2-151
Fitting, Hyd, E90, Jm16/Om12, 2-153, 2-155
Fitting, Hyd, E90, Jm20/Om20, 2-151
Fitting, Hyd, E90, Spcl, 2-55, 2-57
Fitting, Hyd, Plug, Fm10, 2-151

Fitting, Hyd, Plug, Jm10, 2-151
Fitting, Hyd, Plug, Om04, 4-7, 4-9
Fitting, Hyd, Plug, Om06, 2-151, 2-159, 2-161
Fitting, Hyd, Plug, Om08, 4-7, 4-9
Fitting, Hyd, Plug, Pm02, 2-151
Fitting, Hyd, Plug, Pm06, 2-85
Fitting, Hyd, Rst, Fm04/Of04, .047, 2-115, 2-117
Fitting, Hyd, Rst, Jf04/Jm04, .047, 2-115, 2-117
Fitting, Hyd, Str, Ff16/Fm12, 2-155
Fitting, Hyd, Str, Fm04/Om04, 2-83, 2-137
Fitting, Hyd, Str, Fm04/Om06, 2-89, 2-159, 2-161
Fitting, Hyd, Str, Fm06/Om06, 2-39, 2-159, 2-161
Fitting, Hyd, Str, Fm06/Om06, Long, 2-39
Fitting, Hyd, Str, Fm06/Om10, 2-129, 2-131, 2-157, 3-11
Fitting, Hyd, Str, Fm08/Om08, 2-123, 2-139, 2-159, 2-161
Fitting, Hyd, Str, Fm08/Om08, Long, 2-159, 2-161
Fitting, Hyd, Str, Fm08/Om10, 2-83, 2-157
Fitting, Hyd, Str, Fm10/Om10, 2-151
Fitting, Hyd, Str, Fm10/Om12, 2-89
Fitting, Hyd, Str, Fm16/Om12, 2-155, 2-159, 2-161
Fitting, Hyd, Str, Fm16/Om16, 2-151
Fitting, Hyd, Str, Fm20/Om16, 2-157
Fitting, Hyd, Str, Jm04/Om04, 2-81, 2-83, 2-137
Fitting, Hyd, Str, Jm04/Om06, 2-89, 2-159, 2-161
Fitting, Hyd, Str, Jm06/Om06, 2-37, 2-39, 2-159, 2-161
Fitting, Hyd, Str, Jm06/Om06, Long, 2-37, 2-39
Fitting, Hyd, Str, Jm06/Om10, 2-129, 2-131, 2-157, 3-12
Fitting, Hyd, Str, Jm08/Om08, 2-123, 2-139, 2-159, 2-161
Fitting, Hyd, Str, Jm08/Om10, 2-81, 2-83, 2-157
Fitting, Hyd, Str, Jm10/Om10, 2-151
Fitting, Hyd, Str, Jm16/Om12, 2-153, 2-155, 2-159, 2-161
Fitting, Hyd, Str, Jm16/Om16, 2-151
Fitting, Hyd, Str, Jm20/Om16, 2-157
Fitting, Hyd, Str, Om04/Qm04, 2-159, 2-161
Fitting, Hyd, Str, Om06/Qm04, 2-159, 2-161
Fitting, Hyd, Str, Pf02/Pm04, 2-79
Fitting, Hyd, Tee, Ff04/Fm04/Fm04, Run, 3-11
Fitting, Hyd, Tee, Jf04/Jm04/Jm04, Run, 3-12
Fitting, Hyd, Tee, Pf04/Pf04/Pm04, Run, 2-79
Fitting, Nipple, .25mal, 2-55, 2-57
Fitting, Pipe, Bshg, M18 X 1.5, 2-41
Fitting, Pipe, E45, Spcl, 2-79
Fitting, Pipe, E90, Pf02/Pm02, 2-63
Fitting, Pipe, Plug, Pm02, Soc Head, 2-73
Fitting, Pipe, Plug, Pm04, Sq Head, 2-77
Fitting, Plstc, Tee, Bm10/Bm10/Bm10, Nyl, 2-47, 2-57
Fitting, Plug, 2-41
Fitting, Plug, M16, Intake Manifold, 2-47, 2-51
Fitting, Plug, O-Ring, 4-17, 4-19
Fitting, Plug, O-Ring, #4, 4-2
Fitting, Plug, O-Ring, Motor, Hyd, 4-2
Fitting, Plug, Org, #6, Valve [Cec], 4-7, 4-9
Fitting, Str, 10-10 Orb, 37fi [Mit], 6-21
Fitting, Vacuum [M16-15-6h], 2-47, 2-51
Flange Wldt, Fltr, 2-125
Flange, Brg, 1.9id 2h, 2-139
Flange, Brg, Mount, 2-39
Flange, Motor, Hyd, 4-2, 4-3
Flange, Sprocket, Cshft, 6-11
Flap Assy, Seal, Dust Chute, 2-123
Flap, Tire/Tube, 570/500-8, 2-91
Flap, Wand, Vacuum, 3-15
Flasher, 12-80vdc, 2a, 3-3, 3-5, 3-7, 3-9
Flasher, Hd, 12vdc 25a [10-57300], 3-7, 3-9
Flywheel, 5-5
Flywheel, Flatface [Mit 20/24m], 6-18
Frame Wldt, Main [S30], 2-7
Fuelline, .31d Str/Str, Plstc, 2-77
Fuelline, .31d Str/Str, Plstc [8200], 2-77
Fuse, 10 Amp, 2-193
Fuse, 15 Amp, [Min-15], 2-193
Fuse, 20 Amp, [Min-20], 2-193
Fuse, 5 Amp, [Min-5], 2-193
Fuse, 60 Amp, 2-193
Fuse, 60a, 32vdc [Fem Maxi], 3-29, 3-31
Fuse, Blade, 002a, 32vdc, 3-25
Fuse, Blade, 005a, 32vdc, 3-25
Fuse, Blade, 020a, 32vdc, 3-25
Fuse, Blade, 060a [Maxi], 2-33, 2-35
Fuse, Blade, 15a, 32v [Mini], 2-33, 2-35
Fuseholder, Cab, 3-25

G

Gasket, 6-5
Gasket Kit, Repair, Gas [Gm1.6l 2007], 2-47
Gasket Kit, Repair, Lpg [Gm1.6l 2007], 2-51
Gasket, 2.00, 06.30w 10.63l, Adh, 2-123
Gasket, Body, Throttle [1.6l], 2-47
Gasket, Case, Front, 6-12
Gasket, Cover, Hsng, Camshaft, 5-3
Gasket, Cover, Rocker, 6-4
Gasket, Cylinder, Head, 6-5
Gasket, Exhaust, .07, 1.63id, 2/3.4bc, 2-73, 2-75
Gasket, Flng, Pipe, Exhaust, 2-73
Gasket, Head, Cyl, 5-3
Gasket, Manifold, Exh [Mit], 6-16
Gasket, Manifold, Exhaust, 5-9, 6-16
Gasket, Manifold, Intake, 2-47, 5-9, 6-15
Gasket, Neo, .06, 02.00w 02.00l, Adh, 2-125
Gasket, Oil, Adapter [Mit 2.0/2.4], 6-21
Gasket, Oil, Filler, Cap, 6-4
Gasket, Outlet, 6-22
Gasket, Pan, Oil, 5-8
Gasket, Panel, Instmt, 2-33
Gasket, Panel, Switch, 2-33, 2-35
Gasket, Plug, Drain, Oil, 6-7
Gasket, Plug, Relief Valve,Oil Press, 2-41, 5-7
Gasket, Pump, Oil, 5-7
Gasket, Pump, Water, 6-13
Gasket, Rbr, .13, 07.87w 09.84l, Adh, 2-17, 2-19
Gasket, Rbr, Dust Chute, 2-107, 2-109
Gasket, Rbr, Pedal, Propel, 2-99
Gasket, Screen, 6-7
Gasket, Sender, Fuel, 2-77
Gasket, Sensor, Thermal, 2-103, 2-105
Gasket, Throttle [Mit 40mm], 6-27, 6-28
Gasket, Tube [Pcv], 5-3
Gasket, Ure, .50, 07.47w, 15.47l, Adh, 3-15
Gasket, Water Supply [Mit 2.0/2.4l], 6-23
Gasket,Harness, 2-33, 2-35
Gasspring, 072lb, 06.2strk, 2-21, 2-25
Gear, Drive, Oil Pump, 5-7
Gear, Ring, Drive, Oil Pump, 5-7
Gear, Ring, Starter, 5-5
Geroler, Motor, Hyd, 4-13, 4-15
Gerotor Set, Motor, Hyd, 4-2, 4-3
Gerotor, Pump, Hyd, 4-17, 4-19
Glovenet-525 Document Rack/Net 60200104-, 2-27
Grill, 2-21, 2-23
Grill Wldt, Rear, Rh, 2-23
Grill Wldt, Screen, Rear, Rh, 2-23
Grill, Cooler, Oil, 2-21
Grill, Eng, 2-21
Grill, Rear, 2-21
Grommet, Rbr, .25Id .375Od, 4-11
Grommet, Rbr, .50Id 1.0Od, 4-11
Grommet, Rbr, 0.62id, F/0.9h, .06 Matl, 2-123
Grommet, Rbr, 0.63id, F/0.8h, .12 Matl, 3-5, 3-9
Grommet, Rbr, 0.75id, F/1.3h, .12 Matl (CE Only), 2-13
Grommet, Rbr, 0.89id, F/1.2h, .14 Matl, 3-25
Grommet, Rbr, 1.00id, F/1.4h, .12 Matl, 3-5, 3-9
Guard Wldt, Ohg, Top, 3-19, 3-21
Guard, Belt, Gas/Lp, W/ Label, Replmt, 2-67
Guard, Belt, Lh, G/Lpg, W/ Label, Replmt, 2-69

Guard, Belt, Rh, G/Lpg, W/ Label, Replmt, 2-69
Guard, Brush, 2-129, 2-131, 3-11
Guard, Fan, 2-83
Guard, Hose, Rbr, 5.0l, 2-129, 2-131
Guard, Hose, Wrap, Plstc, 37.0, 2-89
Guard, String, Motor, Brush, 2-129, 2-131, 3-11

H

Handle, Door, Cab, 3-27
Handle, Locking, Cab, 3-27
Hanger, Engine, 6-15
Harness, Backup, Rev [S30], 3-3, 3-5, 3-7, 3-9
Harness, Cover, Hppr [S30], 2-193
Harness, Ele [Extn, Telemetry], 3-42
Harness, Hppr [S30], 2-193
Harness, Main, [S30 Xp] (S30 XP Only), 2-193
Harness, Main,[S30] (S30 Only), 2-193
Harness, Ohg [S30], 3-3, 3-5, 3-7, 3-9
Harness, Pump, Fuel [Coyote], 2-77
Harness, Switch, Seat, Ce [S30 Xp] (CE Only) (S30XP Only), 2-193
Harness, Switch, Seat, Ce [S30] (CE Only), 2-193
Harness, Wire, Cab, 3-38
Harness, Wire, Eng, Gas [Gm 1.6L], 2-193
Harness, Wire, Eng, Gas [Mit, 2.0l], 2-193, 6-25
Harness, Wire, Eng, Lpg [Gm 1.6l], 2-193
Harness, Wire, Eng, Lpg [Mit, 2.Ol], 2-193, 6-25
Head Assy, Cylinder, 6-5
Head, Cyl, 5-3
Headlight, 12vdc, 35watt 2.8a, Halogen, 2-111, 2-113
Heater & A/C Assy, W/Fan, 4-11
Heater Unit, W/ A/C & Fan, 3-23
Hinge, 2-17, 2-25, 3-37
Hinge Wldt, 2-103, 2-105, 3-15
Hinge Wldt, Cover, Hppr, Lh, 2-113
Hinge Wldt, Cover, Hppr, Rh, 2-113
Hinge Wldt, Hppr, 2-103, 2-105
Hinge Wldt, Shrd, Lh, 2-23, 2-29, 2-31
Hinge Wldt, Shrd, Lower Lh, 2-29
Hinge Wldt, Shrd, Rh, 2-15, 2-23
Hinge Wldt, Shrd, Side, Lh, 2-31
Hinge, .25pin .12 4.0w 04.0l, 4/.44sl, 2-21
Hinge, .25pin .12, Cover, Top, 2-27
Hinge, .40pin 2.2w 02.0l, 4/0.21h, 3-15, 3-17
Hinge, Bracket, Door, Cab, 3-27
Hinge, Rbr, 2-107, 2-109
Hopper Wldt, Stl, Rear Dump, 2-105
Hopper, Plstc, Trimmed, 2-103
Horn, 12vdc, Dba [Wolo], 2-7
Hose [Epr To Manifold], 2-55, 2-57
Hose [Mixer To Epr], 2-55
Hose [Pcv], 5-3
Hose Assy, Upper, Tap [Mit], 6-29
Hose Assy, W/2cuff, 4.0d 156l 4.0/4.0, 3-15, 3-17
Hose Kit, Hyd, Replmt [S30], 2-145, 2-149, 2-159, 2-161
Hose Kit, Rear Drive, Replmt, 2-89, 2-143, 2-147, 2-157
Hose, 90x90,Filter, Oil, Remote[Mit], 6-21
Hose, 90xstr,Flter, Oil, Remote[Mit], 6-21
Hose, A/C, 06, E45/E90, 052.0l [R134], 3-35
Hose, A/C, 06, E90/E90, 043.0l [R134], 3-33, 3-35
Hose, A/C, 06, E90/E90, 052.0l [R134], 3-33
Hose, A/C, 08, E90/E90, 052.0l [R134], 3-33, 3-35
Hose, A/C, 10, E90/E90, 060.0l [R134], 3-33, 3-35
Hose, Afmkt, Coolant Recvy, 05ft, 2-83
Hose, Afmkt, Rbr, Heater, 0.38id, 03ft, 2-49, 2-53
Hose, Afmkt, Rbr, Heater, 0.62id, 01ft, 2-47, 2-57
Hose, Afmkt, Rbr, Heater, 0.62id, 02ft, 2-47, 2-57
Hose, Afmkt, Rbr, Heater, 0.62id, 03ft, 2-47, 2-59, 2-63
Hose, Afmkt, Rbr, Heater, 0.62id, 20ft, 3-29, 3-31
Hose, Coolant, Molded [Mit 20/24m], 6-29
Hose, Coolant, Upper, Mold [Mit 2013], 2-87
Hose, Drain, Engine Oil, 2-41
Hose, Drain, Oil [Mit 20/24m], 6-7
Hose, Drain, Overflow, Radiator, 2-81
Hose, Drain,Overflow,Radiator[1pick=1ft], 2-61, 2-65
Hose, Exhaust, Vacuum, 5.0id, 40.0l, 3-17
Hose, Fuel [Mixer To Epr, 22.5"L], 2-55, 2-57
Hose, Fuel, 0.31id [Evap Emission 07], 2-77
Hose, Fuel, .38d, Rbr[16"L], 6-15
Hose, Fuel, 0.18id, 29.0l, 2-81, 2-83
Hose, Fuel, Molded [Mit 20/24m], 6-29
Hose, Heater, 0.62id, 020.0l, 2-55
Hose, Heater, E90, 0.62id, 60.0 4.0, 2-47
Hose, Hyd, Med04, Jf04e45/Jf04str, 038.0, 2-143, 2-147
Hose, Hyd, Med04, Jf04e45/Jf04str, 078.0, 2-143, 2-147
Hose, Hyd, Med04, Jf04str/Jf04str, 37.0, 2-143, 2-147
Hose, Hyd, Med10, Jf10e90/Jf10str, 27.0, 2-143, 2-147
Hose, Hyd, Med16, Jf16e90/Jf16str, 016.0, 2-143, 2-147
Hose, Hyd, Med16, Jf16e90/Jf16str, 19.0, 2-143, 2-147
Hose, Hyd, Spcl, Ff10e45/Ff10str, 056.0, 2-145, 2-149
Hose, Hyd, Spcl, Ff10e45/Ff10str, 56.0, 2-143, 2-147
Hose, Hyd, Spcl, Ff10str/Ff10str, 046.0, 2-143, 2-145, 2-147, 2-149
Hose, Hyd, Suc12, Ff12str/Ff12str, 025.0, 2-145, 2-149
Hose, Hyd, Suc12, Jf12str/Jf12str, 27.0, 2-143, 2-147
Hose, Hyd, Suc20, Ff20e45/Ff20str, 022.5, 2-145, 2-149
Hose, Hyd, Suc20, Jf20e45/Jf20str, 022.5, 2-143, 2-147
Hose, Hyd, Tc04, Ff04e45/Ff04str, 038.0, 2-145, 2-149
Hose, Hyd, Tc04, Ff04e45/Ff04str, 078.0, 2-145, 2-149
Hose, Hyd, Tc04, Ff04e90/Ff04str, 042.0, 2-149
Hose, Hyd, Tc04, Ff04e90/Ff04str, 092.0, 2-145, 2-149
Hose, Hyd, Tc04, Ff04e90/Ff04str, 126.0, 2-149, 3-11
Hose, Hyd, Tc04, Ff04str/Ff04str, 018.0, 2-145, 2-149
Hose, Hyd, Tc04, Ff04str/Ff04str, 037.0, 2-145, 2-149
Hose, Hyd, Tc04, Jf04e90/Jf04str, 042.0, 2-147
Hose, Hyd, Tc04, Jf04e90/Jf04str, 092.0, 2-143, 2-147
Hose, Hyd, Tc04, Jf04e90/Jf04str, 126.0, 2-147, 3-12
Hose, Hyd, Tc04, Jf04str/Jf04str, 018.0, 2-143, 2-147
Hose, Hyd, Tc04, Jf04str/Jf04str, 039.0, 2-143, 2-147
Hose, Hyd, Tc06, Ff06e90/Ff06str, 028.0, 2-145, 2-149
Hose, Hyd, Tc06, Ff06e90/Ff06str, 054.0, 2-145, 2-149
Hose, Hyd, Tc06, Ff06e90/Ff06str, 062.0, 2-145, 2-149
Hose, Hyd, Tc06, Ff06e90/Ff06str, 080.0, 2-145, 2-149
Hose, Hyd, Tc06, Ff06e90/Ff06str, 086.0, 2-145, 2-149
Hose, Hyd, Tc06, Ff06e90/Ff06str, 102.0, 3-11
Hose, Hyd, Tc06, Ff06e90/Ff06str, 134.0, 2-145, 2-149
Hose, Hyd, Tc06, Ff06str/Ff06str, 048.0, 2-145, 2-149
Hose, Hyd, Tc06, Jf06e90/Jf06str, 028.0, 2-143, 2-147
Hose, Hyd, Tc06, Jf06e90/Jf06str, 062.0, 2-143, 2-147
Hose, Hyd, Tc06, Jf06e90/Jf06str, 102.0, 3-12
Hose, Hyd, Tc06, Jf06e90/Jf06str, 134.0, 2-143, 2-147
Hose, Hyd, Tc06, Jf06e90/Jf06str, 50.0, 2-143, 2-147
Hose, Hyd, Tc06, Jf06e90/Jf06str, 54.0, 2-143, 2-147

Hose, Hyd, Tc06, Jf06e90/Jf06str, 86.0, 2-143, 2-147
Hose, Hyd, Tc06, Jf06str/Jf06e90, 080.0, 2-143, 2-147
Hose, Hyd, Tc06, Jf06str/Jf06str, 048.0, 2-143, 2-147
Hose, Hyd, Tc08, Ff06e90/Ff06str, 120.0, 3-11
Hose, Hyd, Tc08, Ff08e90/Ff08str, 018.0, 2-145, 2-149
Hose, Hyd, Tc08, Ff08e90/Ff08str, 034.0, 2-145, 2-149
Hose, Hyd, Tc08, Ff08e90/Ff08str, 042.0, 2-145, 2-149
Hose, Hyd, Tc08, Ff08e90/Ff08str, 052.0, 2-145, 2-149
Hose, Hyd, Tc08, Ff08str/Ff08str, 040.0, 2-145, 2-149
Hose, Hyd, Tc08, Ff08str/Ff08str, 041.0, 2-145, 2-149
Hose, Hyd, Tc08, Jf06e90/Jf06str, 120.0, 3-12
Hose, Hyd, Tc08, Jf08e90/Jf08str, 018.0, 2-143, 2-147
Hose, Hyd, Tc08, Jf08e90/Jf08str, 034.0, 2-143, 2-147
Hose, Hyd, Tc08, Jf08e90/Jf08str, 40.0, 2-143, 2-147
Hose, Hyd, Tc08, Jf08e90/Jf08str, 52.0, 2-143, 2-147
Hose, Hyd, Tc08, Jf08str/Jf08e90, 42.0, 2-143, 2-147
Hose, Hyd, Tc08, Jf08str/Jf08str, 040.0, 2-143, 2-147
Hose, Hyd, Tc08, Jf08str/Jf08str, 37.0, 2-143, 2-147
Hose, Hyd, Tc10, Ff10e90/Ff10str, 027.0, 2-145, 2-149
Hose, Hyd, Tc10, Ff10e90/Ff10str, 42.0, 2-151
Hose, Hyd, Tc10, Jf10e90/Jf10str, 42.0, 2-151
Hose, Hyd, Tc12, Ff12e90/Ff12str, 014.0, 2-145, 2-149
Hose, Hyd, Tc16, Ff16e90/Ff16str, 016.0, 2-145, 2-149
Hose, Hyd,Med, Jf16str/Jf16e90, 16.0, 2-143, 2-147
Hose, Intake Mold, 2.00Id 2.00Id [EPDM], 2-63
Hose, Intake, Mold, 2-63
Hose, Intake, Mold [Epdm Mit2013], 2-65
Hose, Intake, Mold, 2.0id, Lpg [Gm 10], 2-63
Hose, Intake, Mold, 2.0id, Lpg [Gm 2010], 2-63
Hose, Intake, Mold, Gas [Epdm Mit2013], 2-61
Hose, Lpg, Med05, Pm04str/Sm04str, 035.0, 2-79
Hose, Lpg, Med05, Pm04str/Sm04str, 055.0, 2-79
Hose, Med04, Jf04e45/Jf04str, 86.0, 2-143, 2-147
Hose, Mold, .62 To .75, 2-55
Hose, Nozzle, Floor, 3-15, 3-17
Hose, Pvc, Clr, 0.38id 0.56od 022.0l, 2-47, 2-55
Hose, Radiator, Mold, 2-85
Hose, Radiator, Mold, .75id X .62id, 2-47
Hose, Rbr, 3-15, 3-17
Hose, Rbr, 1.125id X1.25id, 03.00l, 2-87
Hose, Rbr, 1.125id, 02.25l, 2-87
Hose, Rbr, 1.25id 1.25id, 2-85, 2-87
Hose, Rbr, 1.25id 1.62od 02.2l, 2-85
Hose, Rbr, 2.00id 2.50od 02.5l, 2-59, 2-61, 2-63, 2-65
Hose, Rbr, 2.00Id 2.50Od 03.0L, 2-59
Hose, Rbr, E90, 1.25id 1.25id 04.2 03.1, 2-85
Hose, Rbr, E90, 2.00id [Edpm Mit 2013], 2-61, 2-65
Hose, Rbr, E90, 2.00id 2.00id 03.5 03.5, 2-59, 2-63
Hose, Supply, Gas, .25id, 2-55, 2-57
Hose, Vacuum, 0.16id X 012.0l, 2-123
Hose, Vacuum, 0.22id X 15.0l, 2-47, 2-51
Housing, 4-17, 4-19
Housing, Brg, Motor, Hyd, 4-13, 4-15
Housing, Brg, Pivot, Door, 2-107, 2-109
Housing, Camshaft, 5-3, 5-11
Housing, Fltr, Trimmed, 2-123
Housing, Flywheel [Mit 2.0l], 6-18
Housing, Motor, Hyd, 4-2, 4-3
Housing, Pump, 2-41
Housing, Sppt, Drive, 2-89
Housing, T-Stat, 2 Holes [Mit], 6-22
Housing, Thermostat, 6-22
Housing, Throttle, 40mm [Bosch], 2-47, 2-51
Housing, Valve, 4-13, 4-15
Hub Assy, Wheel, 5 Bolt 4.50bc Taper B, 2-89
Hub Wldt, 2-101
Hub, Adapter, Brush, 1.00b, 2-129, 2-131, 3-11

I

Impeller Assy, Vacfan [Coyote], 2-123
Indicator, Ele, [Multi-Display], 2-33
Indicator, Press, 60psi (S30 Only), 2-151
Indicator, Service, Fltr, Air [20h20 Dn], 2-59, 2-61, 2-63, 2-65
Innertube, 6.00 X 9.00 [Js-2], 2-95
Innertube, Valve [5.00r-8, Js2, 500-8], 2-91
Insert, Plate, Cam, Pump, Hyd, 4-17, 4-19
Instr, Maint, Wall Chart [Rotomold S30] (ONLINE ONLY), 3-44
Instr, Maint, Wall Chart[S30-Online], 3-44
Instr, Motor, Hyd, Repair [En], 4-2
Instr, Repair, Motor, Hyd, Gear, 4-13, 4-15
Instr, Repair, Pump, 4-17, 4-19
Instr, Valve, Steering, Repair, 4-5
Instruction, Repair, Motor, Hyd, 4-3
Insulation, Acstc, 0.5, 03.0 X 23.0 Adh, 2-23
Insulation, Acstc, 0.5, 05.5 X 23.0 Adh, 2-23
Insulation, Acstc, 0.5, 11.5 X 14.5 Adh, 2-23
Insulation, Acstc, 2.0, 02.0 X 12.0, 2-9, 2-11
Insulation, Acstc, Rnd, 0.8, 02.5d 0.5h, 2-39
Insulation, Flame-Retardant, 0.5, 2-77, 2-79
Insulation, Flame-Retardant, 0.75-0.88, 2-13, 2-15
Insulation, Flame-Retardant, 1.0, 2-25
Insulation, Flame-Retardant, 1.00, 2-17, 2-19, 2-21, 2-29
Insulation, Heat, Liner, Lh, 3-25
Insulation, Heat, Liner, Rh, 3-25
Insulation, Sound, Liner, 3-25
Insulation, Sound, Liner, Lh, 3-25
Insulation, Sound, Liner, Rh, 3-25
Insulation, Sound, Liner, Side, Lh, 3-25
Insulation, Sound, Liner, Side, Rh, 3-25
Insulation, Sound, Liner, Top, 3-25
Isolator, 6-25, 6-29
Isolator [Epr], 2-55, 2-57
Isolator, Box, Relay, 2-47, 2-49, 2-51, 2-53
Isolator, Rbr, 2-73, 2-75
Isolator, Vib, Bshg, 1.1d 0.6l .4b 0.78h, 2-81, 2-83, 2-101, 2-123, 2-159, 2-161
Isolator, Vib, Flng, 1.3h .4b 2/.34h, 2-41, 2-43, 2-45

K

Key, 6-10
Key, Ignition, 1-1
Key, Ignition [Replmt W/O Dust Boot], 2-33, 2-35
Key, Latch, Door Assy, 3-27
Key, Motor, Hyd, 4-13, 4-15
Key, Shaft, Pump, Hyd, 4-17, 4-19
Key, Sq, 0.12 X 0.12, 0.50l, 2-123
Key, Valve Stem, 5-3
Key, Woodruff, 0.25 1.00, [Asa#0808], 4-2
Kit, Rotating, Pump, Hyd, 4-17, 4-19
Kit, Seal, Hyd, Pump, 4-17, 4-19
Kit, Seal, Motor, Hyd, 4-2, 4-3, 4-13, 4-15
Kit, Shim, 4-17, 4-19
Knob, 2-133, 3-11, 4-11
Knob Assy, Star, 1.12d 3ear M06x1.0 0.8l, 2-103, 2-105
Knob Assy,Star,1.97d 4ear M10x1.5 10.75l, 2-127
Knob, 1.12d 3.86l M10 X 1.5, Plstc Tpr], 2-127, 2-135

Knob, Rnd, 2.38d 0.88l M6 X 1.0, Plstc, 2-103, 2-105
Knob, Star, 2.20d 8ear 1.1l M10x1.5, Nyl, 2-135, 2-137
Knob, Star, 2.75d 4ear 1.1l M8x1.25, 2-125
Knob, Star, 2.75d 4ear 1.1l M8x1.25,Thru, 2-125
Knob, Tee, 0.38-16, 2.5 X 1.0 1.1l,Plstc, 2-39

L

Label [Fuse Block], 3-25
Label Set, Hi Temp, 2-195
Label Set, Info/Hzrd [Multi-Mach], 2-195
Label Set, Info/Hzrd, Misc, Ce (CE Only), 2-195
Label Set, Info/Hzrd, Misc, Tj (Japan Only), 2-195
Label, Caution [Apply Parking Brake], 2-195
Label, Caution [Apply Parking Brake] (CE and Japan Only), 2-195
Label, Caution, Battery, Tj (Japan Only), 2-195
Label, Circuitbreaker [Fuse Box], 3-25
Label, Cyclone [S30], 2-195
Label, Handle, Lift, 2-195
Label, Info [Exit], 3-23
Label, info, Arm Brush, 2-195
Label, Info, Arm, Brush, 2-139
Label, Info, Hyd Fluid, Na / Ce (Japan Only), 2-195
Label, Level, Sound [100 Db] (CE Only), 2-195
Label, Logo, 10.4l, White [Tennant], 2-195
Label, Opertnl, Telem [Fcc/Ic], 3-42
Label, Panl, Instmt, Basic, 2-33
Label, Panl, Instmt, Rh, 2-33, 2-35
Label, White [S30], 2-195
Lamp, 12vdc, 0.5a, 04cp [#1157], 2-7
Lamp, 12vdc, 37.5watt, Halogen, 2-111, 2-113
Lamp, Bulb, Flsh, 3-3, 3-5
Lamp, Bulb, Strobe, 3-7, 3-9
Lamp, Clr, 12vdc [#3157 Series], 3-7, 3-9
Latch, 2-19, 2-21, 2-23, 2-25, 2-27, 2-29, 2-31, 2-111, 2-113
Latch Assy, Mtg, Tank, Lpg, W/Nut, 2-79
Latch Kit, Door, Access, Ci [S30], 2-103, 2-105
Latch Wldt, Bolt, 2-103, 2-105
Latch, Bolt, 2-9, 2-11
Latch, Cab, 3-27
Latch, Cmpr, M5 X 0.8 Blk, 2-139
Latch, Cmpr, Spring, Knurled Knob, Pl, 2-17, 2-19, 2-81, 3-37
Latch, Hook, 2-9, 2-11
Leg Wldt, Guard, Lh, 3-19, 3-21
Leg Wldt, Guard, Rh, 3-19, 3-21
Lens Assy, W/ Reflector, 2-111, 2-113
Lens, Amb, F/ Strobe / Flasher, 3-3, 3-5, 3-7, 3-9
Lens, Blu, F/ Strobe / Flasher, 3-3, 3-5, 3-7, 3-9
Lens, Red, F/ Strobe / Flasher, 3-3, 3-5, 3-7, 3-9
Lever Assy, 177.8 X 45, 2-95
Lever Wldt, Brush, Side, 2-127
Lever Wldt, Lift, Brush, Main, 2-135
Lever, Lift, Brush, 2-133, 3-11
Lever, Pump, 2-101
Light Kit, Inside, Ci [S30], 3-3, 3-5
Light Kit, outdoor, Ci [S30], 3-7, 3-9
Light, Dome, Cab, 3-25
Light, Flsh, 12vdc, Amb, Rwk, 3-3, 3-5
Light, Led, White, 12-24vdc, 3-3, 3-5, 3-7, 3-9
Light, Panl, 14vdc, 1.1 X 1.0, 2-33, 2-35
Light, Panl, 14vdc, 1.1 X 1.0 (CE Only), 2-33, 2-35
Light, Strobe, Amb, 12-48vdc, Rwk, 3-7, 3-9
Link, 0.19, 1.0w 16.5l, 1/0.5h 1/0.4sl, 2-111
Link, Crank, Limiter, 2-99
Lip Wldt, Oprtr Station / Cab, 3-23
Lip Wldt, Station, Oprtr, 2-15
Lip, Station, Oprtr [Ii], 2-13
Lock-Off, 12v, Lpg [Mit], 6-29
Loom, Convoluted, Split 5/8 [Mit], 6-15
Louver, Rt, Roll, 3-25

M

Magnet, Drive Brush, 2-17, 2-19
Maint Kit, 400hr [S30 Lpg 2010], 1-1
Maint Kit, 400hr, Gas [S30], 1-1
Maint Kit, 400hr, Lpg [S30], 1-1
Maint Kit, 800hr [S30 Lpg 2010], 1-1
Maint Kit, 800hr, Gas [S30], 1-1
Maint Kit, 800hr, Lpg [S30], 1-1
Manifold, Exhaust, 5-9
Manifold, Exhaust [Mit 2.0/2.4l], 6-16
Manifold, Gas, Relief, Valve, 2-77
Manifold, Intake [1.6l], 2-47, 2-51
Manifold, Intake [Mit 20/24m Tilt], 6-15
Manual, Oprtr [S30 Gas/Lpg, Bg, Ce], 3-44
Manual, Oprtr [S30 Gas/Lpg, De, Ce], 3-44
Manual, Oprtr [S30 Gas/Lpg, Dk, Ce], 3-44
Manual, Oprtr [S30 Gas/Lpg, Ee, Ce], 3-44
Manual, Oprtr [S30 Gas/Lpg, En, Ce], 3-44
Manual, Oprtr [S30 Gas/Lpg, Es, Ce], 3-44
Manual, Oprtr [S30 Gas/Lpg, Fi, Ce], 3-44
Manual, Oprtr [S30 Gas/Lpg, Fr, Ce], 3-44
Manual, Oprtr [S30 Gas/Lpg, Gr, Ce], 3-44
Manual, Oprtr [S30 Gas/Lpg, Hu, Ce], 3-44
Manual, Oprtr [S30 Gas/Lpg, It, Ce], 3-44
Manual, Oprtr [S30 Gas/Lpg, Lt, Ce], 3-44
Manual, Oprtr [S30 Gas/Lpg, Lv, Ce], 3-44
Manual, Oprtr [S30 Gas/Lpg, Nl, Ce], 3-44
Manual, Oprtr [S30 Gas/Lpg, No, Ce], 3-44
Manual, Oprtr [S30 Gas/Lpg, Pl, Ce], 3-44
Manual, Oprtr [S30 Gas/Lpg, Pt, Ce], 3-44
Manual, Oprtr [S30 Gas/Lpg, Ro, Ce], 3-44
Manual, Oprtr [S30 Gas/Lpg, Ru, Ce], 3-44
Manual, Oprtr [S30 Gas/Lpg, Se, Ce], 3-44
Manual, Oprtr [S30 Gas/Lpg, Si, Ce], 3-44
Manual, Oprtr [S30 Gas/Lpg, Sk, Ce], 3-44
Manual, Oprtr [S30 Gas/Lpg, Tr, Ce], 3-44
Manual, Oprtr [S30, Gas/Lpg EN Na], 3-44
Manual, Oprtr [S30, Gas/Lpg ES Na], 3-44
Manual, Oprtr [S30, Gas/Lpg FR Na], 3-44
Manual, Oprtr [S30, Gas/Lpg JP], 3-44
Manual, Parts [S30, Gas/Lpg En], 3-44
Manual, Service [S30 EN], 3-44
Manual, Service, Eng [Gm1.6l], 3-44
Manual, Service, Eng[Gm1.6l Em Cert], 3-44
Manual. Oprtr [S30 Gas/Lpg, Cz, Ce], 3-44
Mat, Floor (S30XP Only), 2-13, 2-15
Media, DVD, Oprtr, [S30 EN ES FR], 3-44
Mirror, Convex, 0.50d, 3-23
Mirror, Convex, 06.7 X 06.2, 3-19, 3-21, 3-23
Mixer [E100lp Gm 2010], 2-51
Mixer, W/70deg Ftg, 2-51
Module, Ecu, Gas [Gm1.6l 2007], 2-47
Module, Ecu, Gas [Gm1.6l 2010], 2-47
Module, Ecu, Gas [Mit 2.0l 2013], 6-25
Module, Ecu, Lpg [Gm1.6l 2007], 2-51
Module, Ecu, Lpg [Gm1.6l 2010], 2-51
Module, Ecu, Lpg [Mit 2.0l 2013], 6-25
Molding, Afmkt, Trim, Pvc, .18 .31, 08ft, 2-21, 2-29
Molding, Afmkt, Trim, Pvc, .18 .31, 12ft, 2-111
Motor, Ele, 2200rpm 0.08hp 06.0a, Shakr, 2-125
Motor, Hyd, Gear, [In] 02.8 1500, 4-2
Motor, Hyd, Gear, [In] 17.9 B 1500, 4-3
Motor, Hyd, Gear, [Int], 19.0 X 3000, 4-13
Motor, Hyd, Gear, Ext 0.28 Rh 3000, 2-123
Motor, Hyd, Gear, Ext 0.67 Rh 2500, 2-81, 2-83
Motor, Hyd, Gear, Int 02.8 Bi-Dir 1500 (See Breakdowns), 2-139
Motor, Hyd, Gear, Int 02.8 Bi-Dir 2500, 2-139
Motor, Hyd, Gear, Int 15.0 Bi-Dir 3000 (See Breakdowns), 2-89
Motor, Hyd, Gear, Int 17.1 Bi-dir 3000, 4-15

Motor, Hyd, Gear, Int 17.1 Bi-Dir 3000 (See Breakdowns), 2-89
Motor, Hyd, Gear, Int 17.9 Bi-Dir 1500 (See Breakdowns), 2-129, 2-131, 3-11
Motor, Hyd, Gear, Int 17.9 Bi-Dir 2500, 2-129, 2-131, 3-11
Motor, Info, Repair, 2-123
Motor, Wiper, Cab, 3-23
Mount, Fltr, Remote, 6-21
Muffler, Catalytic [Gm 1.6l 2007], 2-73
Muffler, Catalytic [Gm 1.6l 2010], 2-73
Muffler, Catalytic [Mit 2.0l 2013], 2-75

N

Nut, 6-9, 6-10
Nut, Adj, Mtg, Tank, Lpg, 2-79
Nut, Coil, Nyl Patch, 4-7, 4-9
Nut, Flange, 6-13
Nut, Flng, M05-0.8, 6-30
Nut, Flng, M05-0.8 [Gm1.6l Lp 2010], 2-51
Nut, Flng, M8, 6-15, 6-16, 6-19, 6-21, 6-22
Nut, Hex, Flng, M10 X 1.50, 2-13, 2-15, 2-125, 3-33
Nut, Hex, Flng, M5 X 0.80, 2-17, 2-19, 2-115, 2-117, 3-15
Nut, Hex, Flng, M6 X 1.00, 2-15, 2-23, 2-27, 2-31, 2-41, 2-73, 2-83, 2-107, 2-109, 3-5, 3-9, 3-33, 3-35
Nut, Hex, Flng, M8 X 1.25, 2-7, 2-21, 2-23, 2-25, 2-27, 2-29, 2-43, 2-45, 2-55, 2-57, 2-73, 2-75, 2-77, 2-79, 2-81, 2-89, 2-99, 2-111, 2-113, 2-129, 2-131, 2-151, 2-157, 3-25
Nut, Hex, Jam, .38-16, 2-93
Nut, Hex, Jam, .38-16, Lh, 2-93
Nut, Hex, Jam, .50-20, 2-93
Nut, Hex, Jam, M10 X 1.5, Ss, 2-127, 2-135, 2-137
Nut, Hex, Jam, M20 X 1.5, 2-37, 2-39
Nut, Hex, Lock, .25-20, Nl, 2-101
Nut, Hex, Lock, .25-28, Nl, 2-17
Nut, Hex, Lock, .31-18, Nl, 2-17, 2-19, 2-67
Nut, Hex, Lock, .31-18, Nl (S30XP Only), 2-17, 2-19
Nut, Hex, Lock, .31-18, Nl, Thin, 2-21, 2-25
Nut, Hex, Lock, .31-24, Nl, 2-81, 2-83
Nut, Hex, Lock, .38-16, Nl, 2-79, 3-33, 3-35
Nut, Hex, Lock, .75-10, Nl, 2-89, 2-139
Nut, Hex, Lock, #10-24, Nl, 2-97
Nut, Hex, Lock, M10 X 1.5, Nl, 2-7, 2-41, 2-43, 2-45, 2-81, 2-83, 2-95, 2-101, 2-109, 2-123, 2-127, 2-137, 3-17, 3-19, 3-21, 3-33, 3-35
Nut, Hex, Lock, M10 X 1.5, Nl, Ss, 2-119, 3-3, 3-7
Nut, Hex, Lock, M12 X 1.75, Nl, 2-93, 2-95, 2-139
Nut, Hex, Lock, M4 X 0.70, Nl, 2-7, 2-19, 2-21, 2-23, 2-111, 2-113, 2-123, 3-23
Nut, Hex, Lock, M4 X 0.70, Nl, Ss, 2-97
Nut, Hex, Lock, M5 X 0.80, Nl, 2-115, 2-117, 2-127, 3-3, 3-5, 3-7, 3-9, 3-15, 3-17, 3-43
Nut, Hex, Lock, M6 X 1.00, Nl, 2-17, 2-33, 2-35, 2-39, 2-81, 2-101, 2-103, 2-105, 2-123, 2-157, 3-15, 3-17, 3-29, 3-31, 3-35, 3-37
Nut, Hex, Lock, M6 X 1.00, Nl, Ss, 1-2, 2-99, 2-107, 2-109
Nut, Hex, Lock, M8 X 1.25, Nl, 2-7, 2-27, 2-41, 2-43, 2-45, 2-59, 2-61, 2-63, 2-65, 2-69, 2-73, 2-75, 2-79, 2-81, 2-83, 2-97, 2-101, 2-111, 2-115, 2-117, 2-123, 2-127, 2-129, 2-133, 2-135, 2-137, 2-139, 2-151, 3-11
Nut, Hex, Lock, M8 X 1.25, Nl, Ss, 1-2, 2-103, 2-105, 2-107, 2-109, 2-125, 2-127, 3-23
Nut, Hex, Sltd, .75-16, 4-2
Nut, Hex, Sltd, 1.00-20, 2-93, 2-95
Nut, Hex, Sltd, 1.12-18, 2-89
Nut, Hex, Std, .25-20, 2-47, 2-49, 2-51, 2-53
Nut, Hex, Std, .31-18, 2-67
Nut, Hex, Std, .38-16, 2-73, 2-75, 3-27
Nut, Hex, Std, .75-10, 2-89
Nut, Hex, Std, M10 X 1.25, 2-71
Nut, Hex, Std, M10 X 1.50, 2-137
Nut, Hex, Std, M12 X 1.75, Ss, 2-9, 2-11
Nut, Hex, Std, M3 X 0, 3-25
Nut, Hex, Std, M5 X 0.80, 8, 2-41
Nut, Hex, Std, M6 X 1.00, 8, 2-99, 2-101
Nut, Hex, Std, M6 X 1.00, Ss, 3-3, 3-5, 3-7, 3-9
Nut, Hex, Std, M8 X 1, 2-123
Nut, Hex, Std, M8 X 1.25, 2-67, 2-125, 2-127
Nut, Hex, Std, M8 X 1.25, Brs, 2-41, 2-67, 2-71
Nut, Hex, Stover, M10 X 1.50, 2-73
Nut, Hex, Stover, M8, 2-75
Nut, M10-1.25 Flg [Mit], 6-16, 6-18
Nut, M10-1.25, Hx Flg [Mit], 6-25
Nut, M6-1.0 Flange [Mit], 6-25, 6-29
Nut, M8-1.25 [Mit], 6-15
Nut, Manifold, Exhaust, M8 X 1.25, 5-9
Nut, Motor, Hyd, 4-13, 4-15
Nut, Strainer, 6-7
Nut, Wheel, .50-20 X 60 Angle, 2-89, 2-95
Nut, Wing, .31-18, 2-67, 2-71
Nut, Wing, M10 X 1.5, Pltd, 2-121

O

O-Ring, 6-3, 6-5, 6-12
O-Ring [Mit 208 Buna-N], 6-22, 6-23
Ohg Kit, Ci [S30], 3-19, 3-21
Oil, Hyd [El, Iso 100, 01gal], 1-2
Oil, Hyd [El, Iso 100, 05gal], 1-2
Oil, Hyd [El, Iso 32, 01gal], 1-2
Oil, Hyd [El, Iso 32, 05gal], 1-2
Oil, Hyd [El, Iso 68, 01gal], 1-2
Oil, Hyd [El, Iso 68, 05gal], 1-2
Oil, Hydraulic 68 [20l] (CE ONLY), 1-2
Outlet, Water, W/Plug [Mit 2.0/2.4l], 6-22

P

Pad, Pedal, Brake, 3.96l 2.36w 0.75, 2-97
Paint, Airdry, Blk, 12oz (NOT EUROPE), 1-2
Paint, Airdry, Gray, 12oz (NOT EUROPE), 1-2
Paint, Airdry, Iron Gray, 12oz (NOT EUROPE), 1-2
Paint, Airdry, Off-White, 12oz (NOT EUROPE), 1-2
Paint, Airdry, Teal, 12oz, Solid (NOT EUROPE), 1-2
Pan, Oil, 6-7
Pan, Oil, W/ Baffle / Plug / Seal, 5-8
Pane, Glass, Wndw, Front, 3-23
Pane, Glass, Wndw, Lh Side, Cab, 3-23
Pane, Glass, Wndw, Rear, 3-23
Pane, Wndw, Lower, Cab, 3-27
Pane, Wndw, Slide, Rh, Cab, 3-27
Panel Assy, Instmt, Basic, Replmt, 2-33
Panel Assy, Switch, Replmt, 2-33, 2-35
Panel Kit, Label, Replmt [S30], 2-35
Panel Kit, Replmt [S30], 2-35
Panel Wldt, Access, 2-99
Panel Wldt, Deflector, Heat, 2-77, 2-79
Panel Wldt, Handle, Lift, 2-135
Panel Wldt, Heat, Shield, Lh, 2-23
Panel Wldt, Lift, 2-137
Panel Wldt, Mtg, Door, 2-107
Panel Wldt, Side, 2-13, 3-37
Panel Wldt, Top, Cab, 3-25
Panel, Heat, Shield, Rear, Lh, 2-23
Panel, Instrument, Basic, 2-33
Panel, Light, 2-33, 2-35
Panel, Roof, Plstc, Cab, 3-25
Panel, Seat, 2-17, 2-19
Panel, Shrd, Eng, 2-23
Panel, Shrd, Seat, 2-15
Panel, Side, Access, 2-13, 2-15
Panel, Side, Access, Ce (CE Only), 2-13, 2-15
Panel, Switch Ii, 2-33, 2-35
Pedal Wldt, Brake, 2-97
Pedal, Propel, Lower, W/Tread, 2-99
Pedal, Propel, Upper, W/Tread, 2-99
Pin Assy, Side Brush W/ Clip, 2-129, 2-131, 3-11
Pin, Clevis, 0.25d X 0.50l, 2-121
Pin, Clevis, 0.25d X 0.75l, 2-99
Pin, Clevis, 0.25d X 5.25l, 2-17, 3-37
Pin, Clevis, 0.37d X 0.62l, 2-111
Pin, Clevis, 0.37d X 1.00l, 2-93
Pin, Clevis, 0.37d X 1.50l, 2-127, 2-133, 3-11

Pin, Clevis, 0.37d X 2.12l, 2-127
Pin, Clevis, 0.37d X 4.33l, 2-99
Pin, Clevis, 0.38d X 1.13l, 2-93, 2-135, 2-137
Pin, Clevis, 0.50d X 1.25l, 2-93
Pin, Clevis, 0.50d X 1.75l, 2-133, 2-137, 3-11
Pin, Clevis, 0.50d X 2.00l, 2-133, 3-11
Pin, Clevis, 0.50d X 2.25l, 2-107, 2-109
Pin, Clevis, 0.50d X 4.25l, 2-129, 2-133, 3-11
Pin, Clevis, 0.50d X 5.00l, 2-99, 2-129, 2-133, 3-11
Pin, Clevis, 0.50d X 5.50l, 2-129, 2-133, 3-11
Pin, Cotter, .062 X 0.75, 2-99
Pin, Cotter, .094 X 0.75, 2-93, 2-121, 2-133, 3-11
Pin, Cotter, .094 X 1.00, 2-127, 2-135
Pin, Cotter, .125 X 1.00, 2-93, 2-99, 2-127, 2-129, 2-133, 2-137, 3-11
Pin, Cotter, .125 X 1.25, 2-129, 2-139
Pin, Cotter, .125 X 1.75, 2-93, 2-95
Pin, Cotter, .125 X 2.50, 2-89
Pin, Cotter, .156 X 1.25, 2-107, 2-109
Pin, Cotter, Hair, 0.31d .058 Wir, 2-17, 3-37
Pin, Cotter, Hair, 0.38d .072 Wir, 2-99, 2-111
Pin, Dowel, 6-3, 6-9, 6-10, 6-12
Pin, Dowel, Pump, Hyd, 4-17, 4-19
Pin, Flywheel [Mit 20/20m], 6-18
Pin, Hitch, .500d X 6.00l, Pl, 3-40, 3-41
Pin, Hppr, Lift, 2-115
Pin, Lift, Hppr, 2-115, 2-117
Pin, Lock, Cab, 3-27
Pin, Lock, Cyl Head, 14mm X 17mm, 5-3, 5-5
Pin, Lock, Transmission, 5-5
Pin, Locking, Steering, Tilt [S30], 2-39
Pin, Pivot, 0.75d 02.1l, Int 0.33b, 2-101
Pin, Ring, Lock, Hsng, Water Pump, 5-7
Pin, Roll, .125d X 1.25l, .125/.129, 2-133, 3-11
Pin, Spring, 6-9
Pin, Valve, Steering, 4-5
Pipe, Exhaust, Flex [S30 Mit 2013], 2-75
Pipe, Exhaust, G/Lpg [Mit 2013], 2-75
Piston Set, Ring, 6-10
Piston, Pin [Std A], 6-10
Piston, Pin [Std B], 6-10
Piston, Pin [Std C], 6-10
Piston, Pump, Hyd, Gear, 4-13, 4-15
Piston, W/ Pin, Std, 5-5
Pivot Wldt, Brush, Side, 2-129, 2-133, 3-11
Pivot, Adj, Brush, 2-127
Plate, 2-117
Plate Kit, Repair, 2-41
Plate Wldt, Brush, Adj, 2-135, 2-137
Plate Wldt, Fan, Hub [Gm 1.6l], 2-67
Plate Wldt, Lower, 2-125
Plate Wldt, Perma-Filter, 2-103, 2-105
Plate Wldt, Sppt, Hppr, Lh, 2-115
Plate Wldt, Sppt, Hppr, Rh, 2-115
Plate Wldt, Stop [S30], 2-135
Plate, Adj, Brush, 2-127
Plate, Attmnt, Cover, 2-13
Plate, Brush, Adj, 2-137
Plate, Cover, 2-123, 4-17, 4-19
Plate, Filler, 2-81
Plate, Filler, A/C, 3-33
Plate, Guard, Belt [Gm 1.6l], 2-41
Plate, Guide, 2-125
Plate, Hinge, 2-111
Plate, Lift, Brush, 2-127
Plate, Lift, Upper, 2-127
Plate, Lock Plate, 2-91
Plate, Motor, Wiper, Cab, 3-23
Plate, Mtg, 2-139
Plate, Mtg [Epr], 6-29
Plate, Mtg, Ecu [Mit 2.0/2.4l], 6-25
Plate, Mtg, Eng, 2-41
Plate, Mtg, Relay, 2-47, 2-51
Plate, Mtg, Steer-Control, 2-37
Plate, Mtg, Vacfan, 2-123
Plate, Prop, Rod, 2-27
Plate, Retainer, Door, Dump, 1-2, 2-107, 2-109
Plate, Ring, Headlight, Lh, 2-113
Plate, Ring, Headlight, Rh, 2-113
Plate, Ring, Light, 2-113
Plate, Seal, Retainer, 1-2, 2-107, 2-109
Plate, Spacer, Motor, Hyd, 4-2, 4-3
Plate, Sppt, Hppr, 2-117
Plate, Sppt, Hppr Bottom, 2-103
Plate, Stop, Parking, 2-97
Plate, Tensioner, Adj [Mit 2.0/2.4l], 6-17
Plate, Valve, Motor, Hyd, 4-13, 4-15
Plate, Valve, Pump, Hyd, 4-17, 4-19
Plate, Vent, 3-25
Plate, Water, Outlet [Mit Bypass], 6-23
Plate, Wear, Steering Valve, 4-5
Plate, Wheel, Ce, 2-95
Plate,Lift,Premium, 2-133
Plug, 4-13, 4-15, 6-3
Plug Assy [Cl], 4-5
Plug Wldt, Drive, Brush, 2-139
Plug Wldt, Idler, Brush, 2-139
Plug, .12npt, Ss, 2-47, 2-51
Plug, 1/8 Npt, Brs, Skt Hd [Mit], 6-15
Plug, 1/8npt, Brs [Mit], 6-30
Plug, 3/8npt X 5/16, Brs [Mit], 6-21
Plug, Bore, Valve, Relief, Oil Press, 5-7
Plug, Cap, 6-12
Plug, Drain, Oil Pan, M14 X 1.5 X 12, 5-8
Plug, Flare, 37deg [Mit], 6-7
Plug, Hole, Coolant, Eng Block, 5-5
Plug, Hole, Core, Eng Block, 5-8
Plug, Hole, Injector, 2-51
Plug, Hole, Rnd, 0.25h 0.43l, Brb, Nyl, 2-113
Plug, Hole, Rnd, 0.25h 0.8l, Brb, Nyl, 2-115, 2-117
Plug, Hole, Rnd, 0.30h 0.3l, 3-23
Plug, Hole, Rnd, 0.38h .03-.12, Blk Nyl, 2-137
Plug, Hole, Rnd, 0.44h .03-.12, Blk Nyl, 2-135
Plug, Hole, Rnd, 1.25h .03-.12, Blk Nyl, 3-15
Plug, Hole, Rt, Rocker Switch, .87 X 1.7, 2-33, 2-35
Plug, Hsng, Oil Pump, 5-7
Plug, Injector [Mit], 6-15
Plug, Manifold, Intake, 2-47, 2-51
Plug, Oil, Drain, 6-7
Plug, Orifice, Valve, Hyd, .035, 4-9
Plug, Orifice, Valve, Hyd, .040, 4-7, 4-9
Plug, Orifice, Valve, Hyd, .046, 4-7, 4-9
Plug, Port, Sensor [Map], 2-47, 2-51
Plug, Pump, Hyd, Gear, 4-13, 4-15
Plug, Rubber, 6-7
Plug, Spark, 1-1, 6-19
Plug, Taper, 6-3
Plug, Tapper, 6-12
Poppet, Pump, Hyd, Gear, 4-13, 4-15
Pulley Assy, Cable, 2.8d 0.50b, 2-135
Pulley Assy, Damper, Torsional, 6-10
Pulley, Cable, 1.5d Nyl, 2-93, 2-95, 2-127
Pulley, Cable, 3.1d 2.30b, .19d Cable, 2-127
Pulley, Idler, 6-9
Pulley, Idler, Tens, Belt, 3-33, 3-35
Pulley, Pump, Water, 6-13
Pulley, Tensioner, 6-9
Pulley, Tensioner [Gm], 5-11
Pulley, Tensioner, Assy[Mit2.0/2.4l], 6-17
Pump Assy, Water, 12vdc, 3-29, 3-31
Pump, Fuel, Hi Press [Gm 1.6l/3.0l], 2-77
Pump, Gear, Drive, Oil, 6-12
Pump, Gear, Oil, 6-12
Pump, Hyd, Gear, Ext, 3, 00.70 2500, Cw, 2-157
Pump, Hyd, Piston, [V] 1.44 [R] 4000, 4-17
Pump, Hyd, Piston, Var, 1.24 4500, Cw, 4-19
Pump, Hyd, Piston, Var, 1.24 4500, Cw (See Breakdowns), 2-157
Pump, Info, Repair, 2-157
Pump, Oil, 5-7, 6-12
Pump, Water, 6-13
Pump, Water [Gm], 5-7

R

Race, Bearing, Pump, Hyd, 4-17, 4-19
Race, Thrust, Motor, Hyd, 4-2, 4-3
Radiator [Cross-Flow], 2-81
Radiator, W/ Hyd Cooler [Side X Side], 2-83
Rail, Injector, Fuel, Plstc, 2-47
Regulator [Gm3.0l 2010/Mit], 6-29
Regulator [Ep], 2-55, 2-57
Regulator, Press, Electronic [Epr], 6-30
Relay Assy, 12vdc [2f/1r], 3-29, 3-31
Relay, 12vdc, 20a, Spdt, 2-193

Relay, 12vdc, 40a, Spdt, 2-193
Relay, 12vdc, 040a, Spdt No (CE Only), 2-33, 2-35
Relay, 12vdc, 35a, Spdt [Micro 280], 2-33, 2-35
Repair Kit, Mixer, 6-30
Repair Kit, Vaporizer, 6-29
Reservoir, Hyd, W/ Label, Replmt, 2-151
Resistor, 022.00ohm, 0040watt, 2-47, 2-49, 2-51, 2-53
Retainer, Blade, Deflector, 2-7
Retainer, Boot, Steering Column, 2-39
Retainer, Camshaft, 5-11
Retainer, Motor, 2-125
Retainer, Motor, Hyd, 4-13, 4-15
Retainer, Pulley, 2-127
Retainer, Shaft, 0.12id .38od X .052, 3-27
Retainer, Skirt, 2-105
Retainer, Skirt, .12, 1.5w X 14.4l, Blk, 2-9, 2-11
Retainer, Sparkplug, 2 Way, 5-12
Retainer, Sparkplug, 3 Way, 5-12
Retainer, Stop, 2-137
Retainer, Tank, Lpg, 2-79
Rim Assy, 08.0 X 3.8, 4.5bc /5bolt, 2-91
Rim Assy, 09.0 X 4.0, 4.5bc /5bolt, 2-95
Ring Kit, Piston, Std 78.95-79.02mm, 5-5
Ring, Motor, Hyd, 4-13, 4-15
Ring, Retainer, Steering Valve, 4-5
Ring, Retaining, 4-17, 4-19, 6-17
Ring, Retaining, Ext, 0.50d, Hd, 2-39
Ring, Retaining, Ext, 0.50d, Ss, 2-127
Ring, Retaining, Ext, 1.50d, Hd, 2-115, 2-117
Ring, Retaining, Int, 2.00d, 2-115, 2-117
Ring, Retaining, Pump, Hyd, 4-17, 4-19
Rivet, Blind, .125d X 0.32 X .25d, Alm, 2-17, 2-19, 3-37
Rivet, Blind, .125d X 0.32 X .25d, Stl, 2-81
Rivet, Plstc, .250d X 0.90, 2-7, 2-21, 2-23, 2-39, 2-83, 2-105
Rivet, Plstc, .325d X 0.79, 2-7
Rod Assy, Connecting, 6-10
Rod Wldt, Brake, 2-97
Rod Wldt, Safety, Hppr Cover, 2-121
Rod-End, M6 X 1.0rh Fem 6mmb [Nylon], 2-99, 2-101
Rod-End, 0.75-16rh Fem 0.75b Zerk, 2-89
Rod-End, 0.75-16rh Mal 0.75b [Teflon], 2-89
Rod, Connecting, M08 X 45, 5-5
Rod, Handle, Cab, 3-27
Rod, Hanger, Isolator, 2-73, 2-75
Rod, Latch, Cab, 3-27
Rod, Thrd, 2 End, .25-28 06.0l, 2-17
Rod, Thrd, 2 End, M10 X 1.5 04.6l, 2-121
Rod, Thrd, M10x1.5 80l, 2-133, 3-11

S

Screen, Oil, 6-7
Screen, Oil Pump, W/ Suc Pipe, 5-7
Screw, 2-55, 2-57, 6-5, 6-12
Screw, Adj, Valve, Hyd, 5-3
Screw, Btn, M8 X 1.25 X 40, Ss, 2-127
Screw, Cap, 4-17, 4-19
Screw, Cap, Motor, Hyd, 4-3, 4-13, 4-15
Screw, Cap, Pump, Hyd, 4-17, 4-19
Screw, Flt, Soc, .75-10 X 2.50, Al, 2-139
Screw, Flt, Soc, M5 X 0.80 X 16, 10.9, 2-139
Screw, Flt, Soc, M8 X 1.25 X 25, 10.9, 2-137
Screw, Hex, .25-20 X 0.50, G5, 2-41, 2-47, 2-51
Screw, Hex, .25-20 X 0.75, G5, 2-47, 2-51
Screw, Hex, .31-09 X 1.25, Wood, 2-129, 2-131, 3-11
Screw, Hex, .31-18 X 1.75, G5, 2-67
Screw, Hex, .31-18 X 4.50, G5, 2-67
Screw, Hex, .38-16 X 0.62, G5, 2-85, 2-87
Screw, Hex, .38-16 X 0.75, G5, 2-67
Screw, Hex, .38-16 X 0.75, Nl, 2-139
Screw, Hex, .38-16 X 0.88, G5, 2-41, 2-43, 2-45
Screw, Hex, .38-16 X 1.25, G5, 2-101, 2-157
Screw, Hex, .38-16 X 1.25, Nl, 2-129, 2-131, 3-11
Screw, Hex, .38-16 X 2.00, G5, 3-33, 3-35
Screw, Hex, .38-16 X 3.00, G5, 2-79
Screw, Hex, .38-16 X 3.75, G5, 2-79
Screw, Hex, .50-13 X 1.25, G5, 2-41
Screw, Hex, .75-10 X 2.50, Fl, 2-139
Screw, Hex, .75-10 X 3.25, G5, 2-89
Screw, Hex, 10-24 X 0.50, Ss, 2-67
Screw, Hex, M07-1.00 X 23.0, 8.8, 2-41
Screw, Hex, M10 X 1.25 X 25, 8.8, 2-43, 2-45
Screw, Hex, M10 X 1.25 X 35, 8.8, 2-73, 3-33, 3-35
Screw, Hex, M10 X 1.5 X 130, 8.8, 3-17
Screw, Hex, M10 X 1.5 X 25, 8.8, 3-19, 3-21
Screw, Hex, M10 X 1.5 X 35, 9.8, Sems, 3-40, 3-41
Screw, Hex, M10 X 1.5 X 60, 8.8, 2-133
Screw, Hex, M10 X 1.5 X 80, 8.8, 3-11
Screw, Hex, M10 X 1.50 X 16, 8.8, 2-121
Screw, Hex, M10 X 1.50 X 20, 8.8, 2-39, 2-67, 2-73
Screw, Hex, M10 X 1.50 X 25, 10.9, 2-9, 2-11, 2-91, 2-95
Screw, Hex, M10 X 1.50 X 25, 8.8, 2-125, 3-33, 3-35
Screw, Hex, M10 X 1.50 X 30, 8.8, 2-67
Screw, Hex, M10 X 1.50 X 35, 8.8, 2-73, 2-75, 2-101
Screw, Hex, M10 X 1.50 X 35, 9.8, Sems, 2-13, 2-15, 2-41, 2-125, 2-127, 2-135, 2-137, 3-19, 3-21, 3-23
Screw, Hex, M10 X 1.50 X 40, 8.8, 2-123, 2-125, 2-159, 2-161
Screw, Hex, M10 X 1.50 X 45, 8.8, 2-81, 2-83, 2-109, 2-137
Screw, Hex, M10 X 1.50 X 50, 8.8, 2-7, 2-107, 2-119
Screw, Hex, M10 X 1.50 X 60, 8.8, 2-41, 2-43, 2-45
Screw, Hex, M10 X 1.50 X 80, 8.8, 2-129
Screw, Hex, M10 X 1.50 X 90, 8.8, 2-119
Screw, Hex, M12 X 1.75 X 30, 8.8, 2-43, 2-45
Screw, Hex, M12 X 1.75 X 40, 10.9, 2-115, 2-117
Screw, Hex, M12 X 1.75 X 40, 8.8, 2-93, 2-95
Screw, Hex, M12 X 1.75 X 50, 8.8, 2-117
Screw, Hex, M12 X 1.75 X 90, 8.8, 2-139
Screw, Hex, M16 X 2.00 X 20, 8.8, 2-139
Screw, Hex, M4 X 0.70 X 10, Fmg, Blk, 2-135, 2-137
Screw, Hex, M4 X 0.70 X 20, Ss, 2-97
Screw, Hex, M5 X 0.80 X 16, 8.8, 2-135, 3-7, 3-9, 3-42
Screw, Hex, M5 X 0.80 X 16, Fmg, 3-33, 3-35
Screw, Hex, M5 X 0.80 X 20, 8.8, 2-115, 2-117
Screw, Hex, M6 X 1.0 X 16, 8.8, 3-15, 3-17
Screw, Hex, M6 X 1.0 X 20, 9.8, Sems, 2-79, 2-81, 2-103, 2-105, 2-107, 2-109, 2-135
Screw, Hex, M6 X 1.00 X 10, 8.8, 2-81
Screw, Hex, M6 X 1.00 X 10, Fmg, 2-107, 2-115, 2-117, 2-151
Screw, Hex, M6 X 1.00 X 12, 8.8, 3-33, 3-35
Screw, Hex, M6 X 1.00 X 12, Nl, Ss, 1-2, 2-103
Screw, Hex, M6 X 1.00 X 16, 8.8, 2-77, 2-121, 3-15
Screw, Hex, M6 X 1.00 X 16, Fmg, 2-109, 2-125
Screw, Hex, M6 X 1.00 X 20, 8.8, 2-41, 2-123
Screw, Hex, M6 X 1.00 X 20, 9.8, Sems, 2-39, 2-83, 2-137, 3-15, 3-23
Screw, Hex, M6 X 1.00 X 20, Nl, Ss, 2-139
Screw, Hex, M6 X 1.00 X 20, Ss, 3-3, 3-5, 3-7, 3-9
Screw, Hex, M6 X 1.00 X 25, 8.8, 2-157
Screw, Hex, M6 X 1.00 X 25, 9.8 Sems, 2-9, 2-11, 2-13, 2-41, 2-67, 2-73, 2-81, 2-83
Screw, Hex, M6 X 1.00 X 25, 9.8, Sems, 2-15, 2-23, 2-27, 2-31, 2-69, 3-5, 3-9

Screw, Hex, M6 X 1.00 X 25, Fmg, 2-107, 2-109, 3-29, 3-31
Screw, Hex, M6 X 1.00 X 25, Ss, 2-99
Screw, Hex, M6 X 1.00 X 30, 8.8, 2-101
Screw, Hex, M6 X 1.00 X 30, 9.8, Sems, 1-2, 2-9, 2-11, 2-77, 2-107, 2-109
Screw, Hex, M6 X 1.00 X 35, Ss, 2-139
Screw, Hex, M6 X 1.00 X 60, 8.8, 2-77
Screw, Hex, M8 X 1.25 X 120, 8.8, Fl, 2-69
Screw, Hex, M8 X 1.25 X 16, 8.8, 2-15, 2-23, 2-27, 2-31, 2-123, 2-157, 3-23
Screw, Hex, M8 X 1.25 X 16, Ss, 2-109, 2-113
Screw, Hex, M8 X 1.25 X 20, 8.8, 2-67, 2-69, 2-79, 2-123, 2-125, 2-139, 3-15, 3-17
Screw, Hex, M8 X 1.25 X 20, Fmg, 3-15, 3-17, 3-42
Screw, Hex, M8 X 1.25 X 20, Ss, 2-79, 2-89, 3-23
Screw, Hex, M8 X 1.25 X 20, Ss, Sems, 3-15, 3-17
Screw, Hex, M8 X 1.25 X 25, 8.8, 2-27, 2-81, 2-83, 2-97, 2-123, 3-23
Screw, Hex, M8 X 1.25 X 25, 9.8, Sems, 2-7, 2-13, 2-15, 2-17, 2-19, 2-21, 2-23, 2-25, 2-27, 2-29, 2-47, 2-51, 2-59, 2-61, 2-63, 2-65, 2-69, 2-73, 2-75, 2-77, 2-79, 2-81, 2-83, 2-99, 2-103, 2-105, 2-113, 2-129, 2-131, 2-135, 2-151, 2-153, 3-23, 3-37
Screw, Hex, M8 X 1.25 X 25, Ss, 2-9, 2-11, 2-99, 2-107, 2-109, 2-139
Screw, Hex, M8 X 1.25 X 30, 8.8, 2-9, 2-11, 2-81, 2-99, 2-101, 2-125, 2-127, 2-133, 3-11
Screw, Hex, M8 X 1.25 X 30, 9.8, Sems, 2-29, 2-41, 2-43, 2-45, 2-79, 2-81, 2-95, 2-107, 2-111, 2-127, 2-133, 2-135, 2-151
Screw, Hex, M8 X 1.25 X 30, Ss, 2-89, 2-107
Screw, Hex, M8 X 1.25 X 35, 8.8, 2-27, 2-69, 2-97, 2-137
Screw, Hex, M8 X 1.25 X 35, 9.8, Sems, 2-7, 2-59, 2-61, 2-63, 2-65, 2-77, 2-83, 2-93, 2-95, 2-115, 2-117, 2-129, 2-135
Screw, Hex, M8 X 1.25 X 35, Nl, Ss, 2-127
Screw, Hex, M8 X 1.25 X 40, 8.8, 2-127
Screw, Hex, M8 X 1.25 X 50, 8.8, 2-73, 2-75, 2-127
Screw, Hex, M8 X 1.25 X 60, 8.8, Fl, 2-67, 2-97
Screw, Hex, M8 X 1.25 X 70, 8.8, 2-115, 2-117
Screw, Motor, Hyd, 4-2, 4-3
Screw, Pan, 12-16 X 0.50, F/ Plstc, 2-23, 3-42
Screw, Pan, 12-16 X 0.75, F/ Plstc, 2-113
Screw, Pan, M5 X 0.8 X 12, Ss, 3-17
Screw, Pan, M5 X 0.80 X 16, 4.8, 3-17, 3-43
Screw, Pan, M5 X 0.80 X 25, 4.8, 3-15
Screw, Pan, M6 X 1.00 X 20, 4.8, 3-15, 3-17
Screw, Pan, M8 X 1.25 X 25, Blk, 2-127
Screw, Pan, Phl, .31-18 X 0.75, G2, 2-17
Screw, Pan, Phl, .31-18 X 1.00, G2, 2-17, 2-19
Screw, Pan, Phl, 08-16 X 1.00, F/ Plstc, 2-27
Screw, Pan, Phl, 10-14 X 0.75, F/ Plstc, 2-103
Screw, Pan, Phl, 10-32 X 0.50, G2, Blk, 2-33, 2-35
Screw, Pan, Phl, M3 X 0.50 X 12, Blk, 3-25
Screw, Pan, Phl, M4 X 0.70 X 10, 4.8, 2-37
Screw, Pan, Phl, M4 X 0.70 X 10, Blk, 3-25
Screw, Pan, Phl, M4 X 0.70 X 10, Ss, 2-113
Screw, Pan, Phl, M4 X 0.70 X 16, 4.8, 2-21, 2-23, 2-111, 2-113
Screw, Pan, Phl, M4 X 0.70 X 16, Ss, 2-105, 2-123
Screw, Pan, Phl, M4 X 0.70 X 20, 4.8, 2-19
Screw, Pan, Phl, M4 X 0.70 X 20, Blk, 3-23
Screw, Pan, Phl, M4 X 0.70 X 25, Blk, 3-25
Screw, Pan, Phl, M4 X 0.70 X 60, 4.8, 2-7
Screw, Pan, Phl, M5 X 0.80 X 10, 4.8, 3-15
Screw, Pan, Phl, M5 X 0.80 X 12, Ss, 2-15
Screw, Pan, Phl, M5 X 0.80 X 16, 4.8, 2-17, 2-19, 2-43, 2-45, 2-47, 2-49, 2-51, 2-53, 3-3, 3-5, 3-7, 3-9
Screw, Pan, Phl, M5 X 0.80 X 16, Blk, 2-33, 2-35, 2-127
Screw, Pan, Phl, M5 X 0.80 X 20, 4.8, 3-15, 3-17
Screw, Pan, Phl, M5 X 0.80 X 25, 4.8, 3-3, 3-5, 3-7, 3-9
Screw, Pan, Phl, M5 X 0.80 X 25, Blk, 3-25
Screw, Pan, Phl, M5 X 0.80 X 35, 4.8, 2-47, 2-51
Screw, Pan, Phl, M5 X 0.80 X 40, 4.8, 3-3, 3-5, 3-7, 3-9
Screw, Pan, Phl, M5 X 0.80 X 50, 4.8, 3-29, 3-31
Screw, Pan, Phl, M6 X 1.0 X 16, Blk, 3-27
Screw, Pan, Phl, M6 X 1.0 X 35, Blk, 3-27
Screw, Pan, Phl, M6 X 1.00 X 12, Blk, 2-17, 3-37
Screw, Pan, Phl, M6 X 1.00 X 12, Nl, Pl, 3-27
Screw, Pan, Phl, M6 X 1.00 X 16, 4.8, 3-3, 3-5, 3-7, 3-9
Screw, Pan, Phl, M8 X 1.25 X 16, Blk, 3-27
Screw, Pan, Phl, M8 X 1.25 X 25, Blk, 3-25
Screw, Pan, Phl, M8 X 1.25 X 50, Blk, 3-25
Screw, Set, Soc, 10-24 X 0.25, Nl, 2-125
Screw, Soc, .31-24 X 1.00, Al, 2-101
Screw, Soc, .38-16 X 1.50, Al, 2-41, 2-157
Screw, Soc, .50-13 X 1.50, Al, 2-89
Screw, Soc, M10 X 1.50 X 16, 12.9, 2-33, 2-35
Screw, Soc, M10 X 1.50 X 25, 12.9, 2-37
Screw, Soc, M12 X 1.75 X 55, 10.9, 2-41
Screw, Soc, M16 X 2.00 X 50, 12.9, 2-89
Screw, Soc, M4 X 0.70 X 16, 6-30
Screw, Soc, M6 X 1.00 X 20, 12.9, Nl, 2-139
Screw, Soc, M6 X 1.00 X 25, 12.9, 2-47, 2-51
Screw, Soc, M6 X 1.00 X 45, 12.9, 2-47
Screw, Soc, M8 X 1.25 X 16, 12.9, 2-37
Screw, Soc, M8 X 1.25 X 70, 12.9, 2-51
Screw, Valve, Steering, 4-5
Seal Assy, Pre-Filter, 2-121
Seal Kit, 2-89, 2-115, 2-117, 2-157
Seal Kit, Cartridge, 4-7, 4-9
Seal Kit, Motor, 2-123
Seal Kit, Steering [Cl], 4-5
Seal Kit, Vacuum Hsng, Replmt, 2-123
Seal, Afmkt, Bulb, 90, 0.50d, 03ft, 3-25
Seal, Afmkt, Bulb, 90, 0.75d F/11ga 01ft, 2-23
Seal, Afmkt, Bulb, 90, 0.75d F/11ga 02ft, 2-15, 2-23
Seal, Afmkt, Bulb, 90, 0.75d F/11ga 03ft, 3-25
Seal, Afmkt, Bulb, 90, 0.75d F/11ga 08ft, 2-23, 2-27
Seal, Afmkt, Bulb, Adh 0.38, 0.75w 02ft, 2-83
Seal, Afmkt, Bulb, Str, .50d F/11ga 02ft, 2-23, 2-83
Seal, Afmkt, Bulb, Str, .50d F/11ga 03ft, 2-19
Seal, Afmkt, Bulb, Str, .75d F/07ga 03ft, 3-23
Seal, Afmkt, Bulb, Str, 0.76, 0.93w 01ft, 2-23
Seal, Afmkt, Bulb, Str, 0.76, 0.93w 02ft, 2-27
Seal, Afmkt, Bulb, Str, 0.76, 0.93w 20ft, 3-27
Seal, Afmkt, Foam, 1.18 X 1.18, 01ft, 3-23
Seal, Afmkt, Foam, 1.18 X 1.18, 03ft, 3-23, 3-25
Seal, Afmkt, Rbr, Clsd, Adh, 02ft, 2-9, 2-11, 2-125
Seal, Afmkt, Rbr, Clsd, Adh, 05f, 2-125
Seal, Afmkt, Rbr, Clsd, Adh, 08ft, 2-13, 2-15
Seal, Afmkt, Rbr, Open, Adh, 01ft, 2-29

Seal, Afmkt, Rbr, Open, Adh, 03ft, 2-21
Seal, Afmkt, Rbr, Wndw, 08ft, 3-27
Seal, Afmkt, Rbr, Wndw, 10ft, 3-23
Seal, Afmkt, Rbr, Wndw, 10ft [Zipper], 3-23
Seal, Afmkt, Ure, Adh, 0.38, 0.38w 02ft, 2-83
Seal, Cap, 6-5
Seal, Case, Oil, Rear, 6-3
Seal, Celr Rbr, .25, 06.0w 06.0l, Adh, 3-15
Seal, Chute, Dust, 2-123
Seal, Door, Dump, 1-2, 2-107, 2-109
Seal, Drive, Rear, Grease Cav, 2-89
Seal, Foam, .50 7.47w 15.47l, Ure, Adh, 2-103, 2-105
Seal, Foam, .50, 1.00w 72.00l, Adh, 3-23
Seal, Hppr, 2-103, 2-105
Seal, Inlet, Pre-Filter, 2-103, 2-105
Seal, Lip, 8.86id, 2-125
Seal, Oil, 6-3, 6-5, 6-12
Seal, Oil, Cshft, 5-5
Seal, Org, .069 X 03.06id, 2-157
Seal, Org, .072 X 00.35id #04, 4-7, 4-9
Seal, Org, .078 X 00.47id #06, 4-7, 4-9
Seal, Org, .087 X 00.64id #08, 4-7, 4-9
Seal, Org, Bolt, Cover, Camshaft Hsng, 5-11
Seal, Org, Cap, 5-3
Seal, Org, Cap, Fltr, Oil, 5-8
Seal, Org, Hsng, Oil Pump, 5-7
Seal, Org, Lpg, Mixer [Gm 2007/Mit], 6-28
Seal, Org, Oil Pump, 5-7
Seal, Org, Press Switch / Drain Plug, 5-7, 5-8
Seal, Org, Sensor, Temp [Epr], 2-55, 2-57
Seal, Org, Water Pump, 5-7
Seal, Perma-Filter, 2-103, 2-105
Seal, Pre-Filter, 2-121
Seal, Pre-Filter [Midsize], 2-121
Seal, Rbr, .13, 9.06w 9.84l, Red, 2-123
Seal, Rbr, Clsd, 1.00, Door, Brush, Lh, 2-11
Seal, Rbr, Clsd, 1.00, Door, Brush, Rh, 2-9
Seal, Rbr, Clsd, 2.00w 09.8l Lh, 2-11
Seal, Rbr, Clsd, 2.00w 09.8l Rh, 2-9
Seal, Rbr, Open, 0.12, 0.25w 27.4l Adh, 2-81
Seal, Ring, Pipe, Suc, Oil Pump, 5-7
Seal, Seat, Valve, 5-3
Seal, Trim, Bulb, 90 Degree, 2-13, 2-15
Seal, Wiper, Door, 1-2, 2-107, 2-109
Sealant, Tube, Ds, 5-8
Seat Kit, Std, Replmt (S30 Only), 2-17
Seat, Deluxe [S30] (S30XP Only) (See Breakdowns), 2-19
Seat, Rotator, Valve, 5-3
Seat, Spring, Valve, 5-3
Seat, Spring, Valve, 0.333, 5-3
Seat, Std [Michigan, Model V-2505] (S30 Only), 2-17, 2-19
Seat, Std [Milsco] (S30 Only), 2-19
Seat, Suspension, W/1 Arm & Seatbelt (S30XP Only), 2-17, 2-19
Seat, Valve, Exhaust, [+0.2mm], 5-3
Seat, Valve, Exhaust, [+0.4mm], 5-3
Seat, Valve, Exhaust, Std, 5-3
Seat, Valve, Intake, [+0.2mm], 5-3
Seat, Valve, Intake, [+0.4mm], 5-3
Seat, Valve, Intake, Std, 5-3
Seatbelt, Retractable [Deluxe Seat], 2-17, 2-19
Send-Unit, Fuel, 2-77
Send-Unit, Water, Temp,04npt[113oh/195d], 2-41, 2-151
Sender, Oil, Press [Mit] (3 Prong), 6-25
Sensor [T Map], 2-47, 2-51
Sensor [Tmap], 6-25
Sensor, Camshaft [Mit], 6-25
Sensor, Exhaust, Tailpipe, 2-41, 2-73, 2-75, 6-25
Sensor, Oxygen [Gm 1.6l/3.0l 2007], 2-41
Sensor, Position, Cshft, 2-41, 5-7
Sensor, Spd, Timing Wheel [3.0l], 6-25
Sensor, Temp [Epr], 2-55, 2-57
Sensor, Temp, Coolant, 2-41, 6-25
Shaft, 2-93
Shaft, Arm , Rocker, 6-9
Shaft, Arm, Rocker, 6-9
Shaft, Cap, Rocker, 6-9
Shaft, Idler, Plug, Brush, 2-139
Shaft, Left, Balancer, 6-11
Shaft, Motor, Hyd, 4-13, 4-15
Shaft, Output, Motor, Hyd, 4-2, 4-3
Shaft, Right, Balancer, 6-11
Shaft, Spring, Rocker, 6-9
Sheave Assy Kit, Repair, 2-67
Sheave, Cshft, 5-5
Sheave, Mach [Gm1.6l], 2-67
Shield, Heat, 2-73, 2-81
Shield, Heat, G/Lpg [S30 Mit 2013], 2-75
Shield, Heat, W/ Label, Gas/Lp, Replmt, 2-73
Shield, Heat, Lower [Mit 20/24m], 6-16
Shield, Heat, Tank [Gm 2010], 2-81
Shield, Heat, Upper [Mit 20/24m], 6-16
Shield, Manifold, Exhaust, 5-9
Shield, Starter [1.6l], 2-41
Shock Absorber, 2.3 Strk, 2-101
Shoe Assy, Brake, 177.8 X 45, 2-95
Shoe Set, Brake [1 Set=1pkg=2 Shoes], 2-93
Shroud Kit, Fan, Afmkt, 2-81
Shroud Wldt, Radiator, 2-81
Shroud Wldt, Station, Oprtr, 2-13, 2-15
Shroud, Cooling, 2-81
Shroud, Fan, 2-81, 2-83
Side Brush Kit, Lh, Ci [S30], 3-11
Skirt Kit, Door, Hppr, Maint [S30], 1-2, 2-107, 2-109
Skirt Kit, Hppr Maint [S30], 1-2
Skirt Kit, Hppr, Maint [S30], 2-103
Skirt Kit, Side / Rear [S30], 1-1, 2-7, 2-9, 2-11
Skirt, A/C, 3-35
Skirt, Deflector, 2-9, 2-11, 2-105
Skirt, Deflector Wheel Pocket Skirt, 1-1
Skirt, Door, Brush, 1-1, 2-9, 2-11
Skirt, Hppr, 1-2, 2-103
Skirt, Lip, 1-2, 2-103, 2-105
Skirt, Lip, Hppr, 1-2, 2-103
Skirt, Lip, Hppr, Stl, 2-105
Skirt, Neo, .06, 20.00w 20.00l, 2-81
Skirt, Neo, .06, 30.00w 41.00l [3 Wheel], 2-83
Skirt, Neo, .06, 30.00w 41.00l[Mit 2013], 2-83
Skirt, Neo, .12, 06.65w 18.50l, 03/ Sl, 1-2, 2-103
Skirt, Neo, .18, 06.74w 49.00l, 04/ Sl Rear Skirt, 1-1
Skirt, Neo, .18, 06.74w 50.00l, 04/ Sl, 1-1, 2-7
Skirt, Neo, .37, 06.00w 44.65l, 04/ Sl, 2-7
Skirt, Neo, .37, 06.00w 44.65l, 04/ Sl Recirculation, 1-1
Skirt, Rbr, 2-7
Skirt, Rbr, .12, 10.66w 43.00l, 10/ Sl, 2-7
Sleeve, 0.31b 0.50d 0.3l, Ss, 2-127
Sleeve, Dashpo, Pump, Hyd, Gear, 4-13, 4-15
Sleeve, Nyl, #27 20.0l, 2-139
Sleeve, Nyl, 2.38id 05.0l, 2-89
Sleeve, P/M, 0.21b 0.32d 0.4l, Stl Pl, 3-15, 3-17
Sleeve, P/M, 0.25b 0.38d 0.2l [430ss], 2-103, 2-105
Sleeve, P/M, 0.31b 0.50d 0.5l [430ss], 2-93, 2-95, 2-127, 2-135, 2-137
Sleeve, P/M, 0.31b 0.50d 0.7l [430ss], 2-129, 2-133, 3-11
Sleeve, P/M, 0.31b 0.50d 1.3l [430ss], 2-73
Sleeve, P/M, 0.32b 0.50d 1.3l [430ss], 2-75
Sleeve, P/M, 0.33b 0.63d 0.4l, Ss / Oil, 2-127
Sleeve, P/M, 0.37b 0.75d 0.6l, Stl, 2-77
Sleeve, P/M, 0.40b 0.63d 0.1l [430ss], 2-121
Solenoid, #10, 12vdc, 4-7, 4-9
Solenoid, #8, 12vdc, 4-7, 4-9
Spacer, 0.32d, 1.00d, 0.38l, Pl (CE Only), 2-17, 2-19
Spacer, 0.33b 0.50d 0.15l, Pl, 2-101
Spacer, Alternator [Mit 2.0/2.4l], 6-20
Spacer, Belt, Balancer, Train, 6-11
Spacer, Coil, #8, 4-7, 4-9
Spacer, Hinge, 3-17
Spacer, Plstc, 0.18b 0.27d 0.27l, 3-23
Spacer, Plstc, 0.62b 0.75d 0.27l, 3-23
Spacer, Ring, Throttle [Mit 40mm], 6-28
Spacer, Rnd, .38b .88d .38l, 2-17, 2-19
Spacer, Sppt, 2-107
Spacer, Strap, Adj, Alternator, 2-67
Spacer, Valve, Steering, 4-5
Sparkplug, 5-12
Sparkplug [Gm], 1-1
Spindle Wldt, Wheel, Front, Lh, 2-95

Spindle Wldt, Wheel, Front, Rh, 2-95
Spool, Pilot, Hyd, 4-7, 4-9
Spring, 2-93, 4-13, 4-15
Spring Assy Kit, 2-7
Spring Kit, Scu [Cl], 4-5
Spring, 3/4 X 16 [Gm1.6l 2010 Lpg], 2-55, 2-57
Spring, Cmpr, 0.48od .04wir 03.5l, 2-103, 2-105
Spring, Cmpr, 0.72od .06wir 02.3l, 2-39, 2-133, 3-11
Spring, Cmpr, 0.97od .11wir 02.5l, 2-129, 2-133, 3-11
Spring, Extn, 0.50od 0.06wir 02.5l, 2-107, 2-109
Spring, Extn, 0.75od 0.09wir 02.5l, 2-97
Spring, Extn, 1.00od 0.12wir 05.0l, 2-101
Spring, Extn, 1.39od 0.15wir 09.0l, 2-137
Spring, Motor, Hyd, 4-13, 4-15
Spring, Tens, Brake, 2-95
Spring, Tors, 0.61id .18wir 02.0coil, 2-95
Spring, Tors, 0.75id .06wir 02.8coil, 2-97
Spring, Tors, 1.09id .11wir 03.0coil, 2-127
Spring, Valve, 5-3
Spring, Valve, Relief, Oil Press, 5-7
Sprocket Assy, Cshft, 6-9
Sprocket, Camshaft, 5-11, 6-9
Sprocket, Crankshaft, 5-11
Sprocket, Cshft, 6-11
Sprocket, Pump, Oil, 6-9
Sprocket, Shaft, Balancer, 6-11
Starter, 12vdc [Delco] (Mar. 2006 and Newer), 5-5
Starter, Motor [Mit 2.0/2.4l], 6-20
Steer-Control, Hyd05, 06.1 2030, 2-39, 4-5
Steer-Control, Hyd05, 06.1 2030 (See Breakdowns), 2-37
Stem, Valve, Hyd [4w2p], 4-7, 4-9
Strainer, Hyd, 010gpm 100mesh, 2-151
Strainer, Hyd, 025gpm 100mesh 03psi, 1-1, 2-151
Strap, Adj, Alternator, 2-67
Strap, Cap, Enclosure, 3-15, 3-17
Strap, Door, Cab, 3-27
Strap, Door, Dump, Side, 1-2, 2-107, 2-109
Strap, Main, Lip, 1-2, 2-103, 2-105
Strap, Mtg, Tank, Lpg, 2-79
Strap, Pyp, 0.07 1.0w 18.5l, W/ Buckle, 3-15, 3-17
Strap, Rbr, 2-125
Strap, Static, W/Grommet, .19 1.1w 25.0l, 2-7
Strap, Tank, Fuel, 2-77
Strap, Tank, Hyd, 2-151
Strip, Backing, Hppr, 2-7
Strip, Seal, 2-21
Stud, 6-5
Stud, Ball, .39d .31-16, Gasspring, 2-21, 2-25
Stud, M05-0.8, 6-30
Stud, M05-0.8 [Gm1.6l Lp 2010], 2-51
Stud, M10 X 1.50 [35], 2-73
Stud, M10-1.25 X 50, Full Thrd [Mit], 6-25
Stud, M8-1.25 X 30 [Mit Double End], 6-15
Stud, M8-1.25 X 35 [Mit Double End], 6-15
Stud, M8-1.25 X 40 [Mit], 6-16
Stud, M8-1.25 X 50 Full Thrd [Mit], 6-15
Stud, Manifold, Intake, M8 X 28, 6-16
Stud, Manifold, M8 X 28, 5-9
Stud, Manifold, M8 X 96, 5-9
Stud, Starter, M08 X 1.25, 5-5
Stud, Strike, Cab, 3-27
Stud, Wheel, .50-20 X 1.50l, 0.370th, 2-89
Stud, Wheel, .50-20 X 1.88l, 0.560th, 2-95
Switch Assy, Press, No 02400psi, 2-159, 2-161
Switch Kit, Press, Replmt[S30], 2-123
Switch, A/C [Binary], 3-33, 3-35
Switch, Indicator, Oil Press, 2-41, 5-7
Switch, Indicator, Oil Press [2010], 2-41
Switch, Key, 4 Pos [Honeywell], 2-33, 2-35
Switch, Limit, 15a, Nc, 2-135, 3-7, 3-9
Switch, Press, 0006psi Dpdt, 2-41
Switch, Press, 0070psi Spst Nc 12vdc 08a, 2-79
Switch, Press, Hyd, 18-24psi, Spst, No (S30XP only), 2-151
Switch, Pressure, 12v, 2-123
Switch, Pressure, Oil, 6-12
Switch, Rocker, Dpdt, Mom / Off / Mom, 2-33
Switch, Rocker, Dpdt, On / Off / Mom, 2-33
Switch, Rocker, Dpst, On / None / On, 2-33
Switch, Rocker, Dpst, On / None / On (S30 Only), 3-15, 3-17
Switch, Rocker, Prgrsv, 2-33
Switch, Rocker, Prgrsv (Operating Lights), 2-33, 2-35
Switch, Seat, No [Delta 6440-04], 2-19
Switch, Snap, 15a Nc, Rlr, 2-127
Switch, Snap, 15a No, 3-3, 3-5, 3-7, 3-9
Switch, Snap, 15a No, Rlr, 2-115, 2-117
Switch, Thermal, 160deg, Spdt, 2-103, 2-105
Switch, Turn Signal, 3-7, 3-9

T

Taillight, 12vdc, 6.3 X 2.5, 2-7
Tank, Coolant, 03.30w 4.7hi 04.7l,1liter, 2-81
Tank, Coolant, 03.6w 04.1hi 05.5l,1liter, 2-81, 2-83
Tank, Fuel, 2-77
Tank, Lpg, 33lb, W/ Gauge [Empty, Liq], 2-79
Tape, Warning, Left Blk/Yel [33 Mtr] (CE Only), 2-195
Tape, Warning, Rh, Blk / Yel [33 Mtr] (CE Only), 2-195
Tensioner, 6-9
Tensioner, Timing, Belt, 6-11
Terminal, Tab, .25 .19h .84l, 2-41
Thermostat, 6-22
Thermostat, Heater/Air, 4-11
Thermostat, W/ Hsng And Seal, 5-3
Thurst, Case, 6-5
Tie, Cable, Nyl, 07.3l .19w 1.8 Max D, 2-47, 2-81, 2-83, 3-3, 3-5, 3-7, 3-9
Tie, Cable, Nyl, 11.4l .19w 3.0 Max D, 2-81, 2-111
Tie, Cable, Nyl, 14.5l .30w 4.0 Max D, 2-129, 2-131
Timer, 12vdc, 10a [Ce Seat Switch] (CE Only), 2-33
Timer, 12vdc, 30sec On, 2-33
Timer, 12vdc, 6sec Spcl [Tosr116], 2-33
Tire Assy, Pneu, 21 X 6.0-12 4.5bc, Ce, 2-95
Tire Assy, Pneu, 5.00 4.5bc/5blt[R8ic70] Pneumatic Rear, 1-1
Tire Assy, Pneu, 570/500-08 4.5bc 5bolt (Standard), 2-91
Tire Assy, Pneu, 600x9 4.5bc/5bolt, Ce Pneumatic Front, 1-1
Tire Assy, Solid, 18.0 X 4.3 4.5bc 5bolt (Option), 2-91
Tire Assy, Solid, 18.0x4.3 4.5bc/5bolt Solid Rear Tire, 1-1
Tire Assy, Solid, 20.8 X 5.0, W/ Brg, 1-1, 2-93
Tire, Pneu, 21 X 6.0 X 9.0 12 Ply [Ic40], 2-95
Tire, Solid, 18.0 X 7.0 X 8.0[4.33 Sc15], 2-91
Tire, W/ Tube, W/ Flap, 2-91
Track, Slide, Seat Adj, 12.5l, 2-17, 2-19
Track, Slide, Seat Adj, 12.5l, W/Latch, 2-17, 2-19
Tray Wldt, Lpg, 2-79
Tread, Non-Skid, 02.2w 11.5l, 2-99
Tread, Non-Skid, 04.5w 10.0l, 2-13, 2-15
Tread, Non-Skid, 10.0w 12.0l, 2-13, 2-15
Tube [Pcv], 5-3
Tube Assy, Hyd, Cooler [Coyote], 2-153, 2-155
Tube Assy, Hyd, Fltr, 2-155
Tube Assy, Hyd, Fltr [Coyote], 2-153
Tube Assy, Hyd, Valve Tank [Coyote], 2-153, 2-155
Tube Kit, Exhaust, Repair, Gas/Lpg [S30], 2-73
Tube Wldt, 2-139
Tube Wldt, Door, 3-17
Tube Wldt, Exhaust, Muffler, Gas/Lpg, 2-73
Tube Wldt, Tee, 2-59, 2-63, 2-85
Tube Wldt, Tee [Mit 2013], 2-61, 2-65
Tube, 0.38id 0.5ood 00.6l, Ss, 2-125

Tube, 0.41id, 0.73od, 00.88l, Stl, 2-125
Tube, 0.59id 1.25od 00.6l, Stl, 2-133, 3-11
Tube, 0.77id 1.75od 00.7l, Stl, Pntd, 2-89
Tube, 1.88id 2.00od 02.5l, Ss, 2-63
Tube, Bleed, Air, .62od 2.2l .12npt, Alm, 2-47, 2-55
Tube, Coolant, 1.3d, Lower, 2-85, 2-87
Tube, Coolant, Eng, 2-85
Tube, Coolant, Lower [Mit 2013 S30], 2-87
Tube, Cooling, Line [Mit], 6-23, 6-26
Tube, Ds, 5-8
Tube, Exhaust, Tailpipe, 3 Wheel, 2-73
Tube, Hose, 3-15, 3-17
Tube, Hyd [Pump Charge], 2-157
Tube, Hyd, Gear Pump Front [Coyote], 2-157
Tube, Hyd, Gear Pump Front[S30 Mit2013], 2-157
Tube, Hyd, Gear Pump Middle [Coyote], 2-157
Tube, Hyd, Gear Pump Middle[S30 Mit2013], 2-157
Tube, Hyd, Gear Pump Rear [Coyote], 2-157
Tube, Hyd, Pump, Drain, 2-157
Tube, Hyd, Pump, Rear Drive, Ff10/Fm10, 2-157
Tube, Hyd, Steering Drain, 2-153, 2-155
Tube, Plstc, 0.25id 0.31od 00.5l, Blk, 2-139
Tube, Pump, Water, 6-22
Tube, Water, Line [Mit], 6-22
Turnbuckle, Body, .38thread, 03.9l, 2-93

V

Valve Assy, Relief [Cl], 4-5
Valve, By-Pass, Oil Fltr, 5-8
Valve, Check, 4-7, 4-9
Valve, Cntrl, Solenoid, 4-7, 4-9
Valve, Exhaust, 5-3, 6-9
Valve, Expansion, 4-11
Valve, Gasket, Pcv, 6-4
Valve, Heater, 3-29, 3-31
Valve, Hyd, Solenoid, 12vdc [06s], 4-7, 4-9
Valve, Hyd, Solenoid, 12vdc [06s] (See Breakdowns), 2-159
Valve, Hyd, Solenoid, 12vdc [08s] (See Breakdowns), 2-161
Valve, Inlet, 6-9
Valve, Intake, 5-3
Valve, Lock Off, 2-55
Valve, Lock Off [Gm 1.6l 2010], 2-55, 2-57
Valve, Lpg, Press Relief [Rego], 2-79
Valve, Motor, Hyd, 4-13, 4-15
Valve, Pcv, 6-4
Valve, Relief, 4-7, 4-9
Valve, Relief, 3000psi, 4-17
Valve, Relief, 3500psi, 4-19
Valve, Relief, Oil Press, 5-7
Valve, Relief, Pump , 4-17, 4-19
Valve, Seal, Stem, 6-9
Valve, Spring, 6-9
Valve, Spring, Lock, 6-9
Valve, Spring, Retainer, 6-9
Valve, Spring, Seat, 6-9
Valve, Stem, No, 4-7, 4-9
Video, Oprtr, Dvd [S30 En Es Fr], 3-44

W

Wand, Vacuum, 3-15, 3-17
Washer, 4-17, 4-19, 6-9, 6-21
Washer Flat,0.50,Sae, 2-39, 2-43, 2-45
Washer, 1/4 Flat [Mit], 6-27
Washer, Belt, Balancer, Train, 6-11
Washer, Bolt, 6-7
Washer, Cab, Shld, Glass, 3-25
Washer, Flat 3/8, Sae, 6-17
Washer, Flat, #10, 3-17
Washer, Flat, 0.16b 0.38d .05, Pl, 06, 2-23
Washer, Flat, 0.19b 0.44d .03, Nyl, Blk, 2-33, 2-35
Washer, Flat, 0.19b 0.50d .03, Stl, Blk, 3-23, 3-25
Washer, Flat, 0.25, Fendr, 1-2, 2-103, 2-123
Washer, Flat, 0.25, Sae, 2-17, 2-39, 2-49, 2-53, 2-101, 2-109, 3-3, 3-5, 3-7, 3-9
Washer, Flat, 0.25, Sae, Blk, 3-27
Washer, Flat, 0.25, Std, 1-2, 2-41, 2-47, 2-51, 2-77, 2-81, 2-107, 2-109, 3-15, 3-17, 3-29, 3-31
Washer, Flat, 0.25b 0.56d .05, Pl, 10, 2-49, 2-53, 3-42
Washer, Flat, 0.27b 0.69d .05, Ss, 2-99, 2-139
Washer, Flat, 0.31, Fendr, 2-23, 2-123
Washer, Flat, 0.31, Hardened, 2-67
Washer, Flat, 0.31, Sae, 2-41, 2-67, 2-71, 2-75, 2-81, 2-83, 2-89, 2-101, 2-123, 2-125, 2-127, 3-23
Washer, Flat, 0.31, Sae, Blk, 3-23, 3-25, 3-27
Washer, Flat, 0.31, Std, 1-2, 2-7, 2-9, 2-11, 2-15, 2-23, 2-27, 2-29, 2-41, 2-43, 2-45, 2-59, 2-61, 2-63, 2-65, 2-69, 2-73, 2-75, 2-79, 2-81, 2-83, 2-89, 2-101, 2-103, 2-105, 2-107, 2-109, 2-111, 2-113, 2-123, 2-133, 2-137, 3-11, 3-15, 3-17, 3-23
Washer, Flat, 0.31, Std (S30XP Only), 2-17, 2-19
Washer, Flat, 0.31b 0.67d .07, Stl, Blk, 3-25
Washer, Flat, 0.32b 1.00d .12, Ss, 2-31, 2-103, 2-107, 2-123, 2-125
Washer, Flat, 0.34b 1.50d .12, Stl, Pl, 2-109
Washer, Flat, 0.38, Fendr, 2-121
Washer, Flat, 0.38, Hardened, 2-41, 2-55, 2-57
Washer, Flat, 0.38, Sae, 2-33, 2-35, 2-41, 2-43, 2-45, 2-67, 2-93, 2-125, 2-127, 2-129, 2-139, 2-157, 3-33, 3-35
Washer, Flat, 0.38, Std, 2-9, 2-11, 2-41, 2-43, 2-45, 2-67, 2-71, 2-73, 2-75, 2-81, 2-83, 2-99, 2-107, 2-109, 2-123, 2-129, 2-131, 2-133, 2-137, 3-11, 3-19, 3-21, 3-27, 3-33, 3-35, 3-42
Washer, Flat, 0.38b 0.88d .08, Ss, 2-9, 2-11, 2-67, 2-71, 2-127
Washer, Flat, 0.38b 0.88d .12, Stl, Pl, 2-17, 2-19
Washer, Flat, 0.39b 0.75d .06, Nyl, 2-27, 2-103, 2-105, 2-111
Washer, Flat, 0.40b 0.81d .06, Nyl, 3-17
Washer, Flat, 0.40b 1.12d .12, Ss, 2-67, 2-83
Washer, Flat, 0.40b 1.12d .12, Stl, Pl, 2-101, 2-121, 2-123, 2-125, 2-159, 2-161, 3-3, 3-7
Washer, Flat, 0.44b 2.00d .12, Stl, Pl, 2-41, 2-43, 2-45
Washer, Flat, 0.50, Sae, 2-93, 2-95, 2-99, 2-127, 2-129
Washer, Flat, 0.50, Std, 2-7, 2-41, 2-117, 2-119
Washer, Flat, 0.53b 1.75d .12, Stl, Pl, 2-139
Washer, Flat, 0.56b 1.38d .11, Ss, 2-9, 2-11
Washer, Flat, 0.62, Sae, 2-99
Washer, Flat, 0.75, Sae, 2-81, 2-89, 2-159, 2-161
Washer, Flat, 0.81b 1.24d .03, Stl, Pl, 2-101
Washer, Flat, 08, 2-7, 2-97, 2-111, 2-113
Washer, Flat, 1.02b 1.75d .12, Stl, 2-93, 2-95, 2-115, 2-117
Washer, Flat, 1.39b 2.12d .13, Stl, 2-89
Washer, Flat, 10, 2-15, 2-23, 2-33, 2-35, 2-47, 2-51, 2-113, 2-115, 2-117, 2-127, 2-135, 3-3, 3-5, 3-7, 3-9, 3-15, 3-33, 3-35
Washer, Flat, 2.16b 3.50d .16, Felt, 2-89
Washer, Flat, Belleville, .31, 2-101, 2-139
Washer, Flat, Belleville, .38, 2-9, 2-11, 2-73, 3-33, 3-35
Washer, Flat, Belleville, .50, 2-115, 2-117, 2-139
Washer, Flat, Belleville, M10, 2-127
Washer, Flt, Pump, Hyd, 4-17, 4-19
Washer, Lock, 0.38, 6-17
Washer, Lock, Int-ext, 0.25, 2-41, 2-125, 3-33, 3-35
Washer, Lock, Int-Ext, 0.31, 3-35
Washer, Lock, Int-ext, 0.38, 2-7, 2-41, 2-43, 2-45, 2-67, 2-71, 2-125
Washer, Lock, Int-ext, 10, 2-67, 2-113
Washer, Lock, Int, 0.25, 2-151
Washer, Lock, Int, 0.31, 2-41, 2-67, 2-71
Washer, Lock, M12 [Mit], 6-18

Washer, Lock, M6 [Mit], 6-28
Washer, Lock, M8 [Mit], 6-9, 6-21
Washer, Pump, Hyd, 4-17, 4-19
Washer, Sealing, 0.28b 0.75d Ss, Neo, 3-23
Washer, Sheave, Cshft, 5-5
Washer, Special, 6-10
Washer, Spring, 6-13
Washer, Sprkt, Camshaft, 5-11
Washer, Star, M10 [Mit], 6-25
Washer, Strainer, 6-7
Washer, Thrust, 0.61b 1.25d .06, Fgl, 2-127
Weight, Counter, Casting, 52.8lb, 2-119
Weight, Counter, Casting, 72.8lb, 2-119
Weight, Counter, Casting, 72.8lb (S30 and S30XP Only), 2-7
Weight, Counter, Casting, 79.9 Lb, 2-7
Weight, Eccentric, 2-125
Wheel, Steering, 14.0d 0.81b 36tooth, 2-37, 2-39
Wire Set, Sparkplug [1.6l], 5-12
Wire, 10ga 16.0l Blk .25ring /.38ring, 3-33, 3-35
Wire, Ground, 2-67