800D

Operator Manual

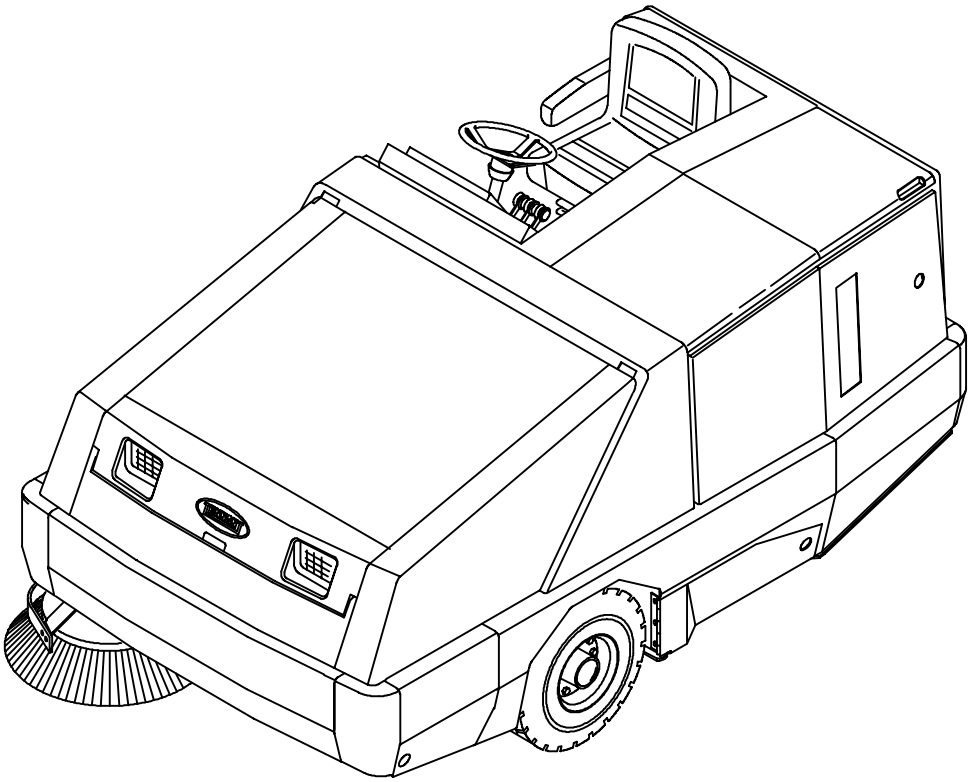

MM308

This manual is furnished with each new TENNANT Model 800D. It provides necessary operating and preventive maintenance instructions. Read this manual completely and understand the machine before operating or servicing it.

This machine will provide excellent service. However, the best results will be obtained at minimum costs if:

- The machine is operated with reasonable care.
- The machine is maintained regularly – per the maintenance instructions provided.
- The machine is maintained with TENNANT supplied or equivalent parts.

Manual Number – MM308

Revision: 07

Published: 11–95

Copyright © 1993, 1994, 1995 TENNANT, Printed in U.S.A.

CONTENTS

	Page
SAFETY PRECAUTIONS	3
OPERATION	5
OPERATOR RESPONSIBILITY	5
MACHINE COMPONENTS	7
CONTROL PANEL SYMBOLS	8
CONTROLS AND INSTRUMENTS	10
OPERATION OF CONTROLS	11
DIRECTIONAL PEDAL	11
BRAKE PEDAL	12
PARKING BRAKE (For machines below serial number 001103)	12
PARKING BRAKE (For machines serial number 001103 and above)	13
THROTTLE LEVER	14
SIDE BRUSH LEVER (For machines below serial number 001177	15
SIDE BRUSH SWITCH (For machines serial number 001177 and above)	15
SIDE BRUSH DOWN PRESSURE KNOB	16
HOPPER DOOR LEVER	17
HOPPER ROLLOUT LEVER	18
HOPPER LIFT LEVER	19
HORN BUTTON	19
CHARGING SYSTEM LIGHT	20
ENGINE OIL PRESSURE LIGHT	20
ENGINE WATER TEMPERATURE LIGHT	20
HOPPER TEMPERATURE LIGHT – THERMO SENTRY™	20
MAIN BRUSH SHUT DOWN LIGHT	21
CLOGGED FILTER LIGHT	21
HOPPER DOOR LIGHT (OPTION)	21
FUEL LEVEL GAUGE	21
HOURMETER	22
HAZARD LIGHT SWITCH (OPTION)	22
OPERATING LIGHTS SWITCH	22
FILTER SHAKER SWITCH	23
VACUUM FAN SWITCH	23
IGNITION SWITCH	24
MAIN BRUSH SWITCH	25
STEERING WHEEL	26
STEERING WHEEL TILT LEVER	26
BLOWER WAND LEVER (OPTION)	26
CIRCUIT BREAKERS	27
GLOW PLUGS LIGHT	27
MAIN BRUSH DOWN PRESSURE KNOB	28
LATCHES	28
OPERATOR SEAT	29
HOPPER SUPPORT BAR	29
WINDSHIELD WIPER SWITCH (OPTION)	30
DOME LIGHT SWITCH (OPTION)	30
RECIRCULATING AIR LOUVERS (OPTION)	30
HEATER KNOB (OPTION)	30
FAN SPEED SWITCH (OPTION)	31
AIR CONDITIONING SWITCH (OPTION)	31
AIR CONTROL VENTS (OPTION)	31
HOW THE MACHINE WORKS	32
PRE-OPERATION CHECKLIST	32
STARTING THE MACHINE	34
SWEEPING AND BRUSH INFORMATION	37
SWEEPING	39
STOP SWEEPING	41
EMPTYING THE HOPPER	42
STOP THE MACHINE	44
POST-OPERATION CHECKLIST	46
ENGAGING HOPPER SUPPORT BAR	47
DISENGAGING HOPPER SUPPORT BAR	49
OPERATION ON INCLINES	50
MACHINE TIE–DOWNS	51
OPTIONS	52
VACUUM WAND	52
BLOWER WAND	56
REGENERATIVE FILTER SYSTEM (RFS)	58
MACHINE TROUBLESHOOTING	59

CONTENTS

Page

MAINTENANCE 60
MAINTENANCE CHART 60
LUBRICATION 62
ENGINE 62
REAR WHEEL SUPPORT 62
FRONT WHEEL BEARINGS 63
SIDE BRUSH PIVOT PINS 63
MAIN BRUSH ADJUSTMENT 63
HYDRAULICS 64
HYDRAULIC FLUID RESERVOIR 64
HYDRAULIC FLUID 65
HYDRAULIC HOSES 65
PROPELLING MOTOR 66
ENGINE 66
COOLING SYSTEM 66
AIR FILTER INDICATOR 67
AIR FILTER 67
WATER SEPERATOR/FUEL FILTER . . 68
ENGINE FUEL FILTER 68
FUEL LINES 68
PRIMING FUEL SYSTEM 68
TO PRIME FUEL SYSTEM 68
BATTERY 70
BELTS AND CHAINS 70
ENGINE BELT 70
STATIC DRAG CHAIN 70
DEBRIS HOPPER 71
HOPPER DUST FILTER 71
TO REMOVE OR REPLACE HOPPER DUST FILTER 71
THERMO SENTRY™ 73

Page

BRUSHES 73
MAIN BRUSH 73
TO REPLACE MAIN BRUSH 73
TO CHECK AND ADJUST MAIN BRUSH PATTERN 74
SIDE BRUSH 77
TO REPLACE SIDE BRUSH 77
SKIRTS AND SEALS 78
HOPPER LIP SKIRTS 78
BRUSH COMPARTMENT SKIRTS 78
REAR SKIRTS 79
BRUSH DOOR SEALS 79
HOPPER SEALS 79
HOPPER DOOR SEALS 79
HOPPER SIDE SKIRT 80
HOPPER DUST SEAL 80
HOPPER COVER SEAL 80
HOPPER VACUUM FAN SEAL 80
BRAKES AND TIRES 81
SERVICE BRAKES 81
PARKING BRAKE 81
TIRES 82
REAR WHEEL 82
PUSHING OR TOWING MACHINE 82
MACHINE JACKING 83
STORING MACHINE 83
SPECIFICATIONS 84
GENERAL MACHINE PERFORMANCE . . 84
POWER TYPE 85
STEERING 85
HYDRAULIC SYSTEM 85
INDEX 86

SAFETY PRECAUTIONS

The following precautions are used throughout this manual as indicated in their description:

WARNING: To warn of hazards or unsafe practices which could result in severe personal injury or death.

FOR SAFETY: To identify actions which must be followed for safe operation of equipment.

The machine is suited to sweep disposable debris. Do not use the machine other than described in this Operator Manual. The machine is not designed for use on public roads.

The following information signals potentially dangerous conditions to the operator or equipment:

FOR SAFETY:

1. **Do not operate machine:**
   - **unless trained and authorized.**
   - **unless operator manual is read and understood.**
   - **if it is not in proper operating condition.**
   - **in flammable or explosive areas unless designed for use in those areas.**
   - **in areas with possible falling objects unless equipped with overhead guard.**

2. **Before starting machine:**
   - **check for fuel, oil, and liquid leaks.**
   - **keep sparks and open flame away from refueling area.**
   - **make sure all safety devices are in place and operate properly.**
   - **check brakes and steering for proper operation.**

3. **When starting machine:**
   - **keep foot on brake and directional pedal in neutral.**

4. **When using machine:**
   - **use brakes to stop machine.**
   - **go slow on inclines and slippery surfaces.**
   - **use care when reversing machine.**
   - **move machine with care when hopper is raised.**
   - **make sure adequate clearance is available before raising hopper.**
   - **do not carry passengers on machine.**
   - **always follow safety and traffic rules.**
   - **report machine damage or faulty operation immediately.**

5. **Before leaving or servicing machine:**
   - **stop on level surface.**
   - **set parking brake.**
   - **turn off machine and remove key.**

6. **When servicing machine:**
   - **avoid moving parts. do not wear loose jackets, shirts, or sleeves.**
   - **block machine tires before jacking machine up.**
   - **jack machine up at designated locations only. Block machine up with jack stands.**
   - **use hoist or jack of adequate capacity to lift machine.**
   - **wear eye and ear protection when using pressurized air or water.**
   - **disconnect battery connections before working on machine.**
   - **avoid contact with battery acid.**
   - **avoid contact with hot engine coolant.**
   - **allow engine to cool.**
   - **keep flames and sparks away from fuel system service area. Keep area well ventilated.**
   - **use cardboard to locate leaking hydraulic fluid under pressure.**
   - **use tennant supplied or approved replacement parts.**

WARNING: Engine emits toxic gases. Severe respiratory damage or asphyxiation can result. Provide adequate ventilation. Consult with your regulatory authorities for exposure limits. Keep engine properly tuned.

WARNING: Raised hopper may fall. Engage hopper support bar.

WARNING: Lift arm pinch point. Stay clear of hopper lift arms.

WARNING: Moving belt and fan. Keep away.

The following safety labels are mounted on the machine in the locations indicated. If these or any label becomes damaged or illegible, install a new label in its place.

EMISSIONS LABEL – LOCATED ON THE FRONT PANEL OF THE OPERATOR COMPARTMENT.

NOISE LABEL – LOCATED ON THE FRONT PANEL OF THE OPERATOR COMPARTMENT.

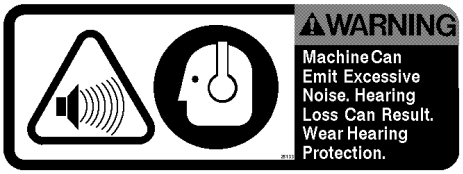

FOR SAFETY LABEL – LOCATED ON THE FRONT PANEL OF THE OPERATOR COMPARTMENT.

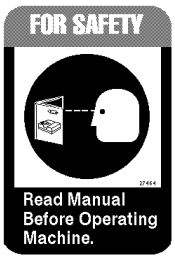

ENGINE FAN AND BELT LABEL – LOCATED ON THE RADIATOR SHROUD.

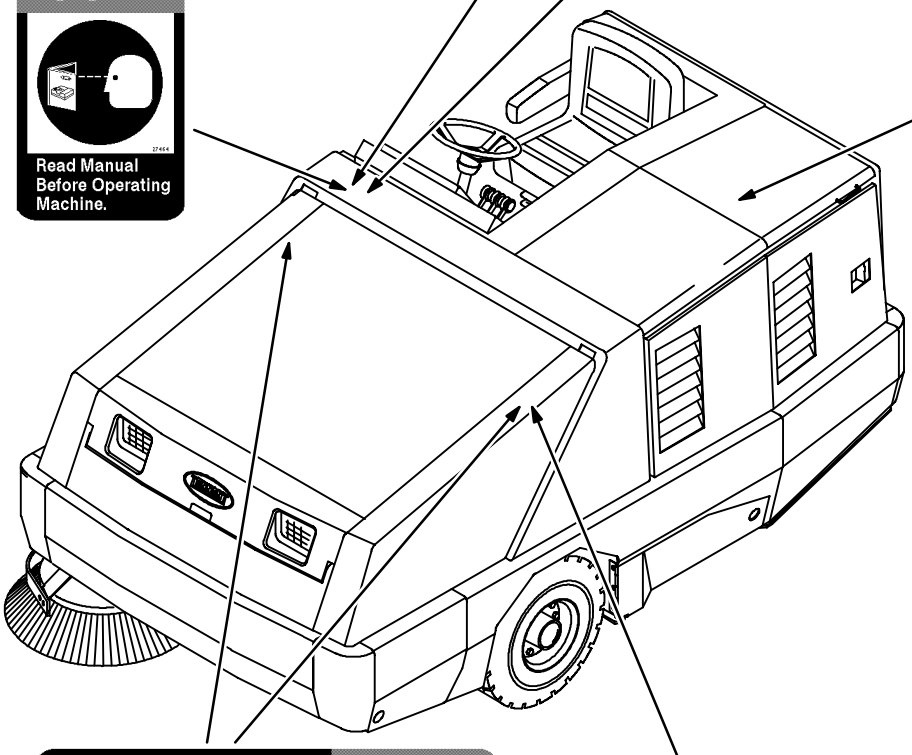

07623

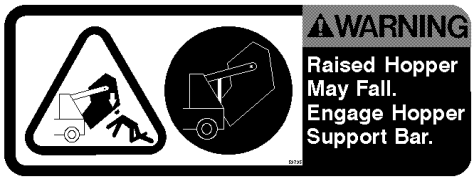

HOPPER SUPPORT BAR LABEL – LOCATED ON THE HOPPER LIFT ARMS CROSS-TUBE AND ON BOTH HOPPER LIFT ARMS.

HOPPER LIFT ARMS LABEL – LOCATED ON BOTH HOPPER LIFT ARMS.

OPERATION

OPERATOR RESPONSIBILITY

- ❑ The operator's responsibility is to take care of the daily maintenance and checkups of the machine to keep it in good working condition. The operator must inform the service mechanic or supervisor when the required maintenance intervals occur as stated in the *MAINTENANCE* section of this manual.

- ❑ Read this manual carefully before operating this machine.

FOR SAFETY: Do not operate machine, unless operation manual is read and understood.

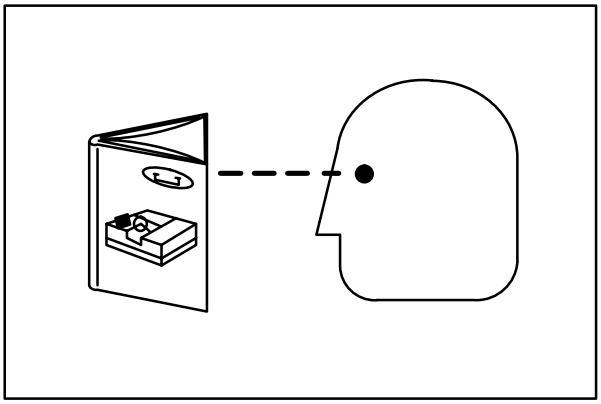

07324

- ❑ Check the machine for shipping damage. Check to make sure machine is complete per shipping instructions.

- ❑ Check the hydraulic fluid level in the hydraulic reservoir.

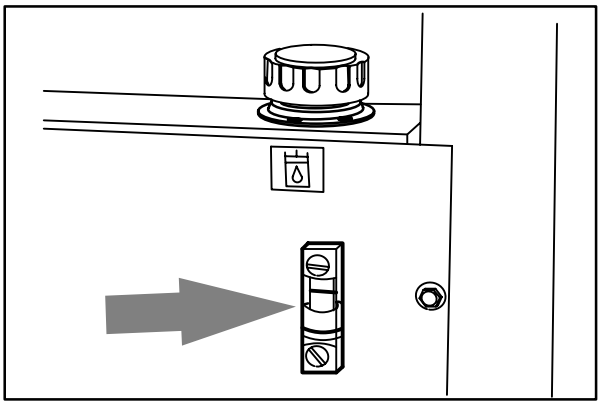

08430

- ❑ Check the engine oil level.

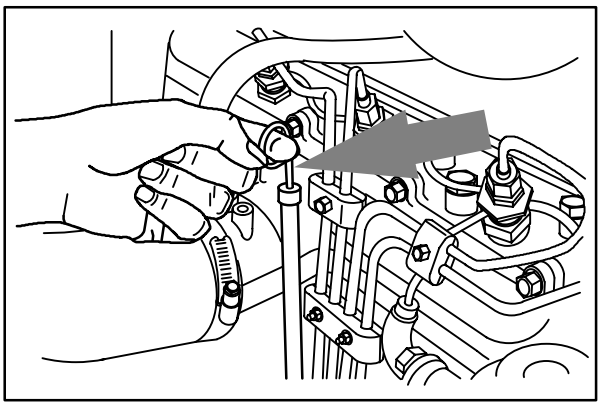

08431

❑ Check the radiator coolant level. The coolant level should be 25 to 50 mm (1 to 2 in) below the fill opening.

FOR SAFETY: When servicing machine, avoid contact with hot engine coolant.

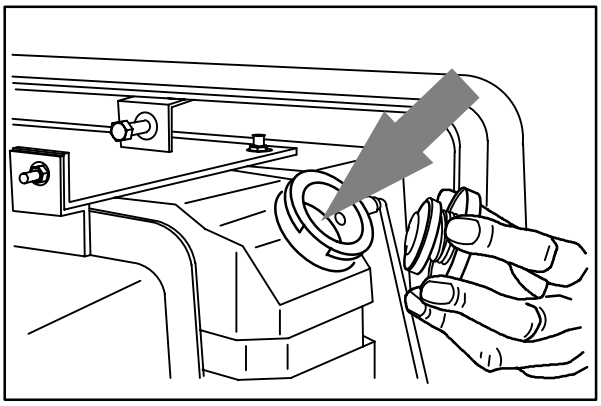

08432

❑ Fill the fuel tank.

FOR SAFETY: When servicing machine, keep flames and sparks away from fuel system service area. Keep area well ventilated.

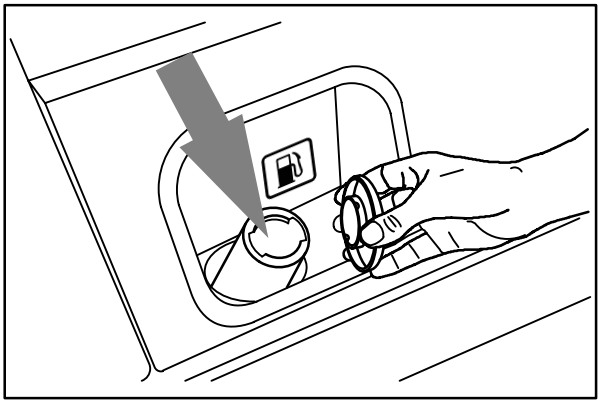

08433

❑ After the first 50 hours of operation, follow the recommended procedures stated in the *MAINTENANCE CHART*.

❑ Keep your machine regularly maintained by following the maintenance information in this manual. We recommend taking advantage of a regularly scheduled service contract from your TENNANT representative.

❑ Order parts and supplies directly from your authorized TENNANT representative. Use the parts manual provided when ordering parts.

MACHINE COMPONENTS

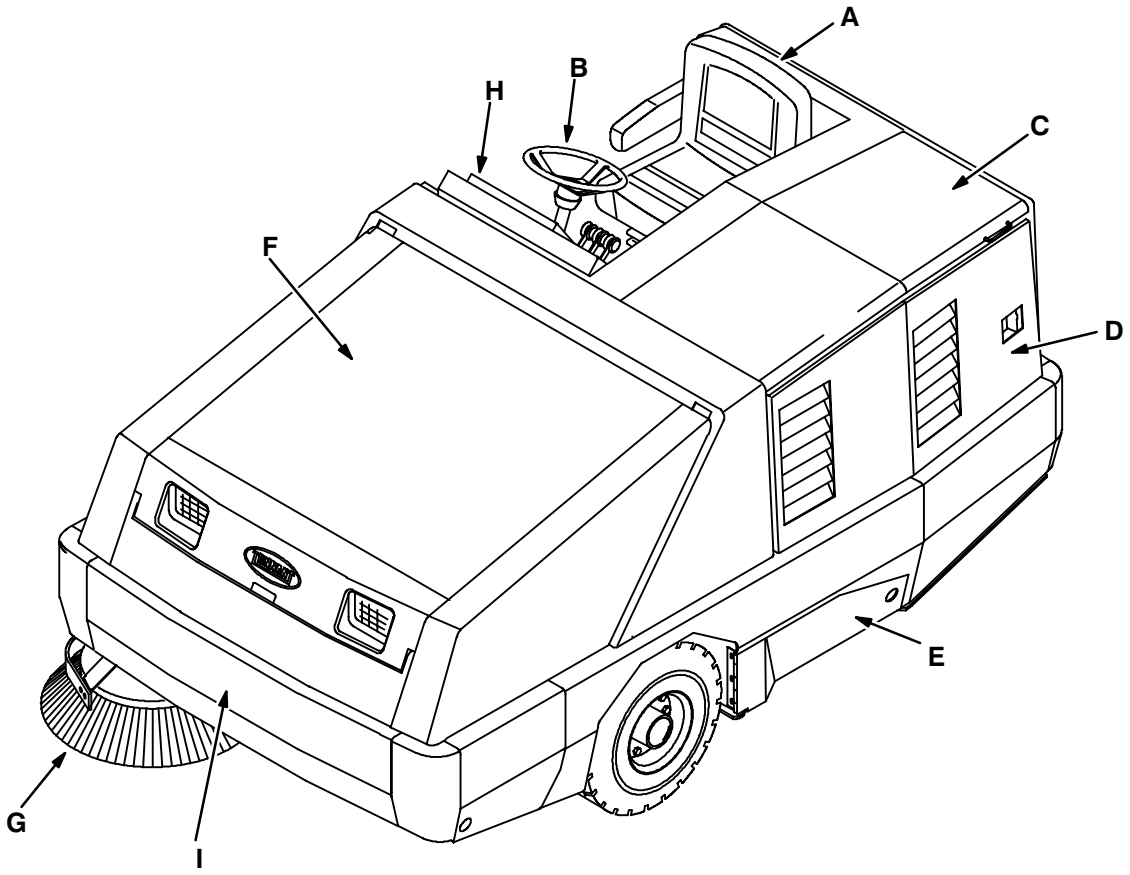

07623

A. Operator Seat
B. Steering Wheel
C. Engine Cover
D. Engine Side Door
E. Main Brush Access Door
F. Hopper Cover
G. Side Brush
H. Instrument Panel
I. Hopper Door

CONTROL PANEL SYMBOLS

These symbols identify controls and displays on the machine:

- Idle
- Fast
- Side Brush Down Pressure Light
- Side Brush Down Pressure Heavy
- Side Brush Down and On
- Side Brush Up and Off
- Hopper Door Close
- Hopper Door Open
- Hopper Roll In
- Hopper Roll Out
- Hopper Down
- Hopper Up
- Horn
- Charging System
- Engine Oil Pressure
- Engine Water Temperature
- Hopper Temperature – Thermo Sentry™
- Main Brush Shut Down
- Filter Clogged
- Hopper Door Closed
- Fuel
- Hourmeter
- Hazard Light
- Operating Lights
- Fan
- Steering Wheel Tilt
- Main Brush Down and II Speed™
- Main Brush Off

Main Brush Down and Normal Speed

Main Brush Down Pressure Light

Main Brush Down Pressure Heavy

Circuit Breaker 1

Circuit Breaker 2

Circuit Breaker 3

Circuit Breaker 4

Circuit Breaker 5

Circuit Breaker 6

Circuit Breaker 7

Circuit Breaker 8

Circuit Breaker 9

Parking Brake

Glow Plugs (Preheat)

CONTROLS AND INSTRUMENTS

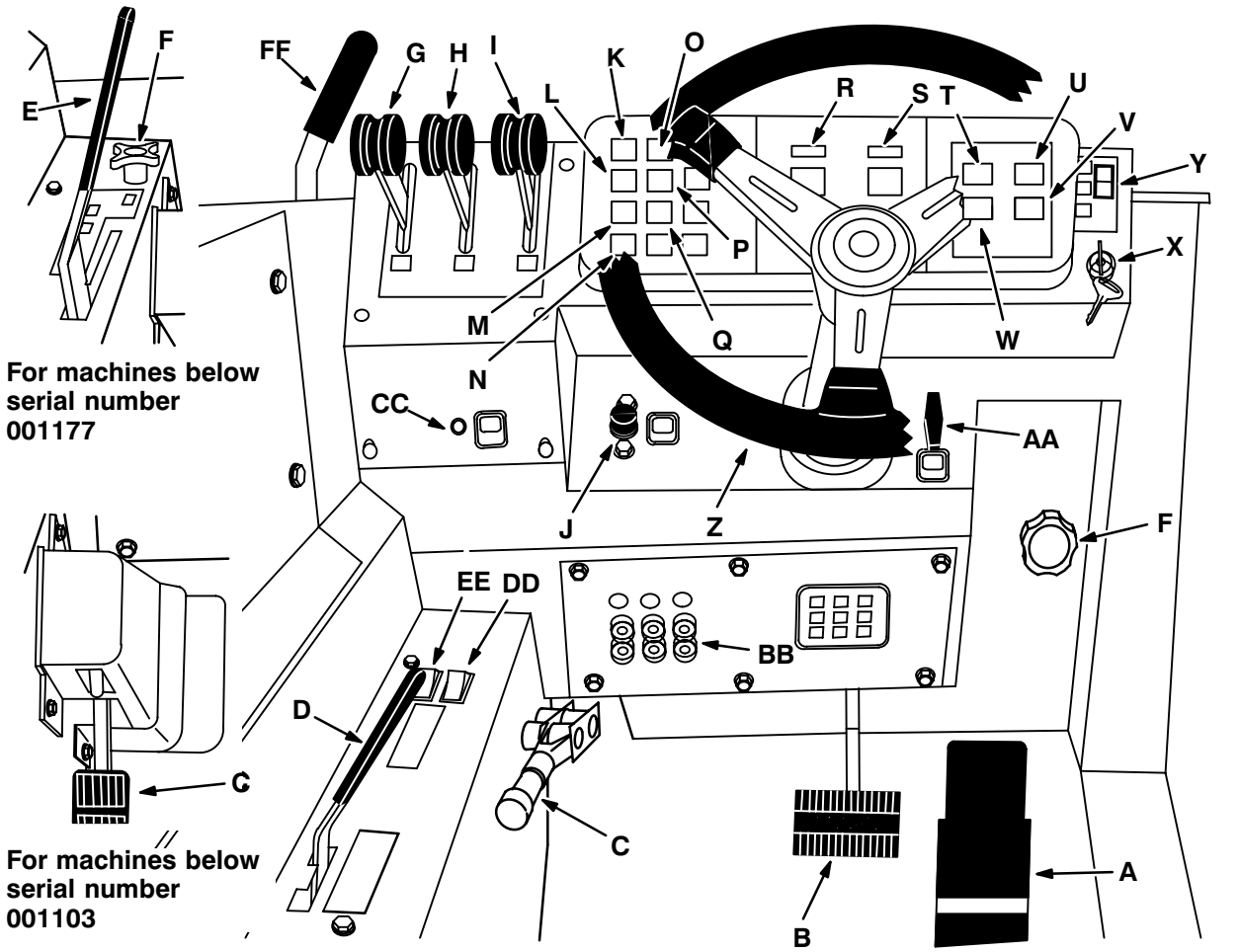

A. Directional Pedal
B. Brake Pedal
C. Parking Brake
D. Throttle Lever
E. Side Brush Lever
F. Side Brush Down Pressure Knob
G. Hopper Door Lever
H. Hopper Rollout Lever
I. Hopper Lift Lever
J. Horn Button
K. Charging System Light
L. Engine Oil Pressure Light
M. Engine Water Temperature Light
N. Hopper Temperature Light – Thermo Sentry™
O. Main Brush Shut Down Light
P. Clogged Filter Light
Q. Hopper Door Light (Option)
R. Fuel Level Gauge
S. Hourmeter
T. Hazard Light Switch (Option)
U. Operating Light Switch
V. Filter Shaker Switch
W. Vacuum Fan Switch
X. Ignition Switch
Y. Main Brush Switch
Z. Steering Wheel
AA. Steering Column Tilt Lever
BB. Circuit Breakers
CC. Glow Plugs Light
DD. Side Brush Switch, Right
EE. Side Brush Switch, Left (Option)
FF. Blower Wand Lever (Option)

OPERATION OF CONTROLS

DIRECTIONAL PEDAL

The directional pedal controls direction of travel and the propelling speed of the machine. You change the speed of the machine with the pressure of your foot; the harder you press the faster the machine travels.

Forward: Press the top of the directional pedal with the toe of your foot.

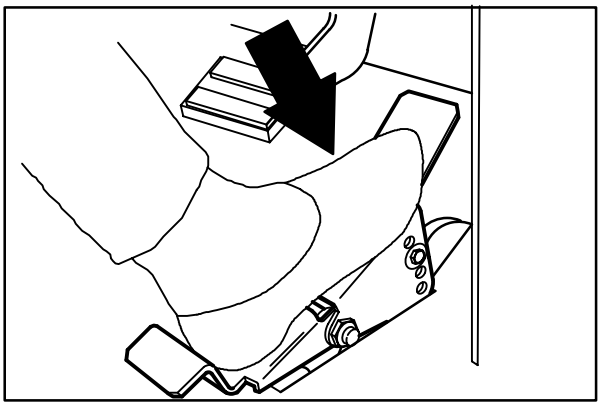

08467

Reverse: Press the bottom of the directional pedal with the heel of your foot.

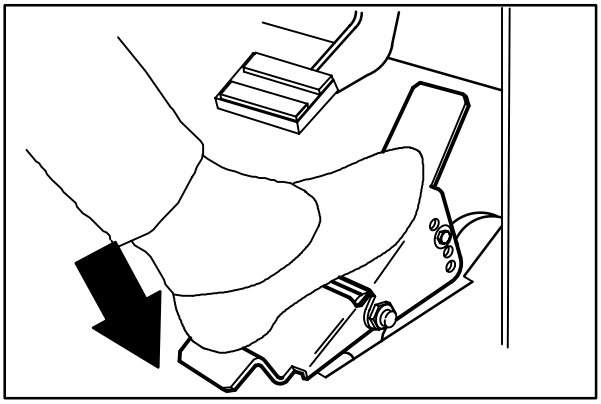

08468

Neutral: Take your foot off the directional pedal and it will return to the neutral position.

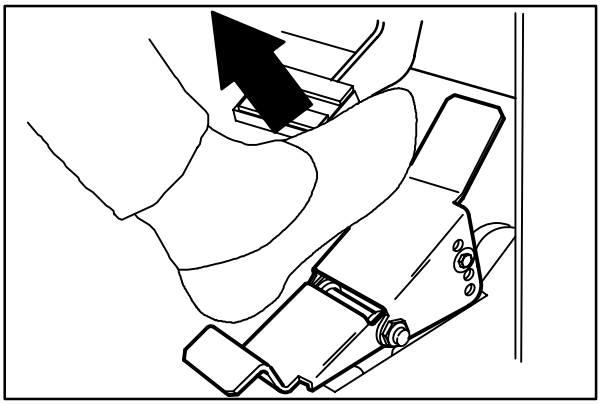

08469

The toe angle of the directional pedal is adjustable. Remove the clevis pin, move the top of the pedal to the angle needed, and put the clevis pin through the adjustment holes.

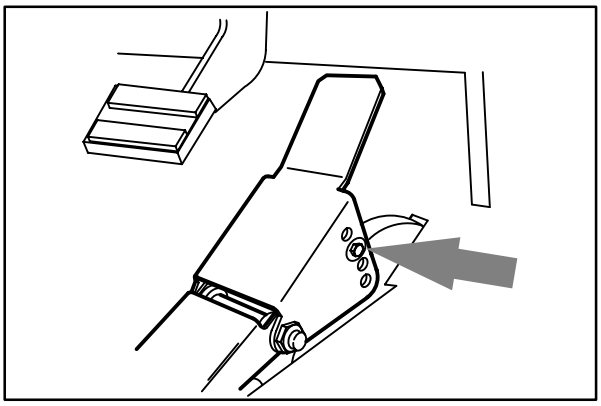

08470

BRAKE PEDAL

The brake pedal stops the machine.

Stop: Take your foot off the directional pedal and let it return to the neutral position. Step on the brake pedal.

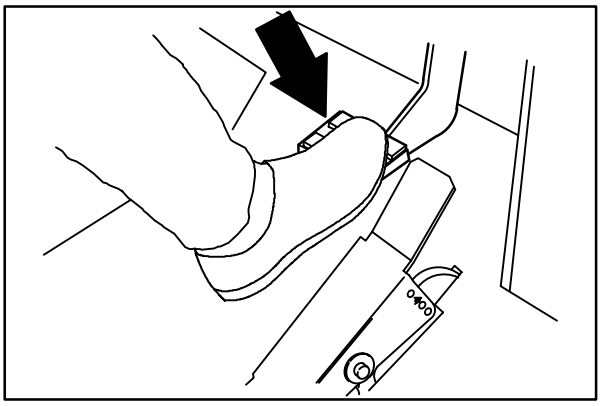

08471

PARKING BRAKE (For machines below serial number 001103)

The parking brake (P) pedal sets and the lever releases the front wheel brakes.

Set: Step on the parking brake pedal.

FOR SAFETY: Before leaving or servicing machine; stop on level surface, set parking brake, turn off machine and remove key.

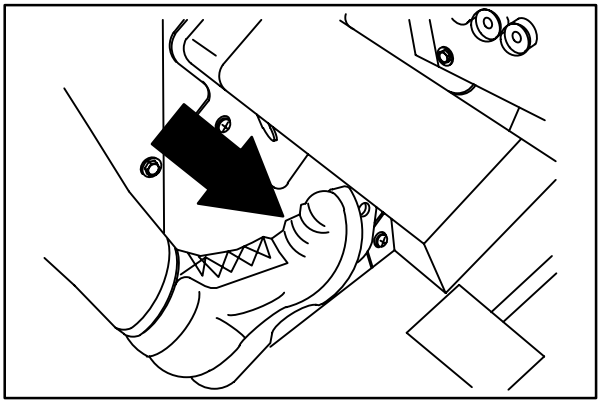

08434

Release: Pull up on the release lever.

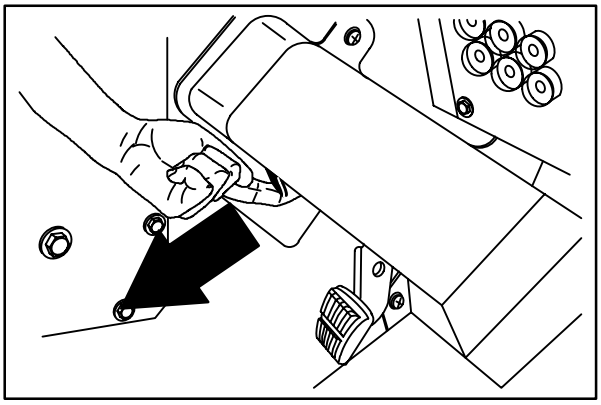

08435

PARKING BRAKE (For machines serial number 001103 and above)

The parking brake lever sets and releases the front wheel brakes.

Set: Pull the parking brake lever up.

FOR SAFETY: Before leaving or servicing machine; stop on level surface, set parking brake, turn off machine and remove key.

Release: Push the parking brake lever down.

THROTTLE LEVER

The throttle lever controls the engine speed.

Fast: Pull the lever into the **Fast** position.

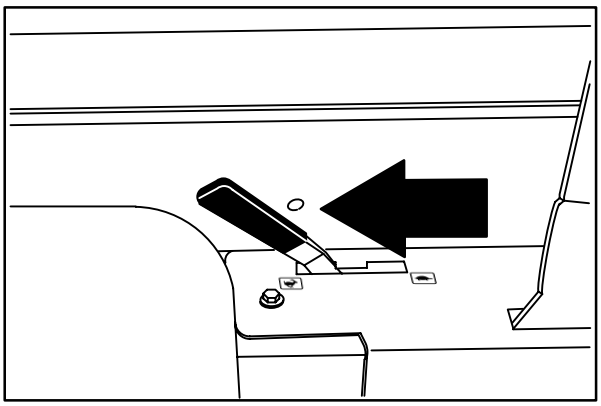

08456

Idle: Push the lever into the **Idle** position.

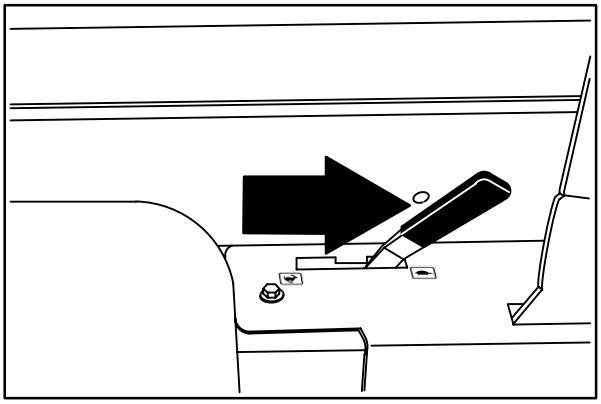

08457

SIDE BRUSH LEVER (For machines below serial number 001177

The side brush lever controls the position and rotation of the side brush.

On/Down: Pull the side brush position lever back and to the right into the **On/Down** slot.

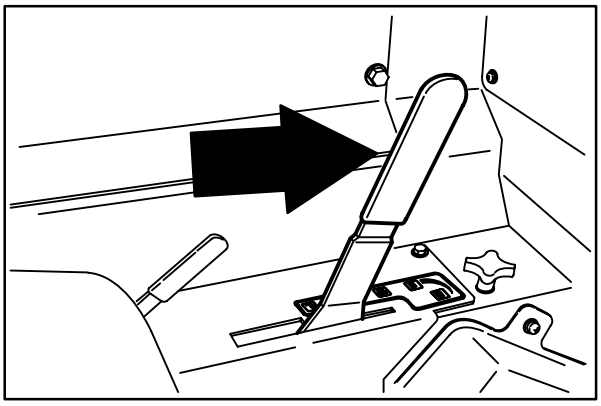

08458

Off/Up: Pull the side brush position lever back and to the left into the **Off/Up** slot.

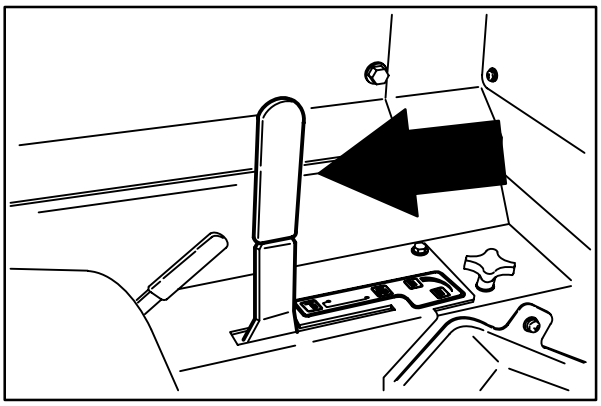

08459

SIDE BRUSH SWITCH (For machines serial number 001177 and above)

The right side brush switch controls the right side brush position and rotation. The optional left side brush switch controls the optional left side brush position and rotation.

Down and On: Press the top of the switch into the **On/Down** position.

Up and Off: Press the bottom of the switch into the **Off/Up** position.

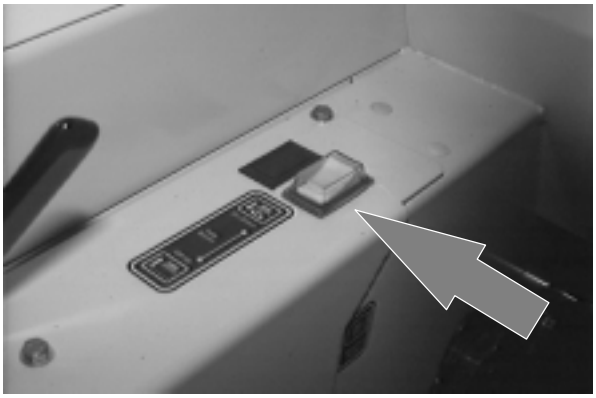

SIDE BRUSH DOWN PRESSURE KNOB

The side brush down pressure knob changes the side brush contact with the sweeping surface.

For machines below serial number 001177.

Heavy: Turn the side brush down pressure knob counter-clockwise.

Light: Turn the side brush down pressure knob clockwise.

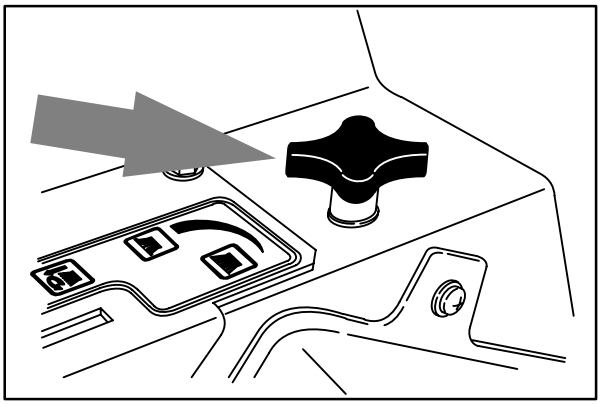

09395

For machines serial number 001177 and above.

Increase Pressure: Turn the side brush down pressure knob counter-clockwise.

Decrease Pressure: Turn the side brush down pressure knob clockwise.

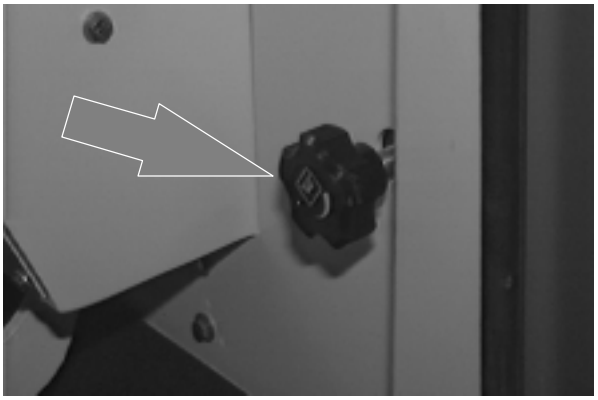

HOPPER DOOR LEVER

The hopper door lever opens and closes the hopper door. Close the hopper door when emptying the hopper to control debris and dust.

Open: Pull and hold the hopper door lever in the **Open** position.

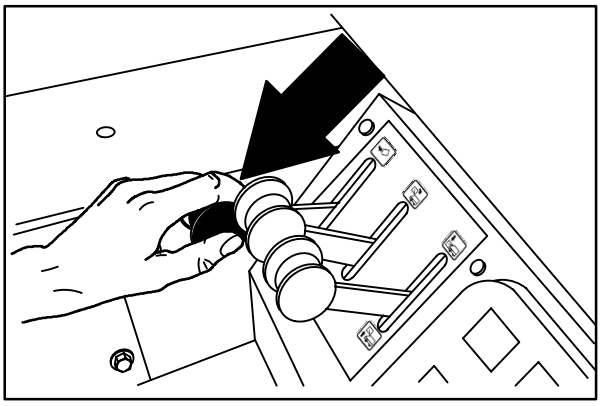

08474

Hold: Release the hopper door lever into the middle position.

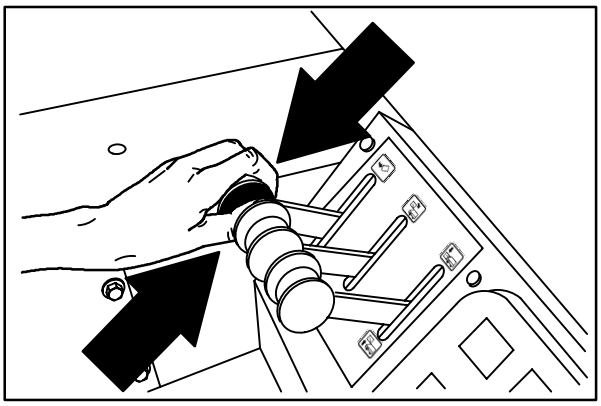

08475

Close: Push and hold the hopper door lever in the **Close** position.

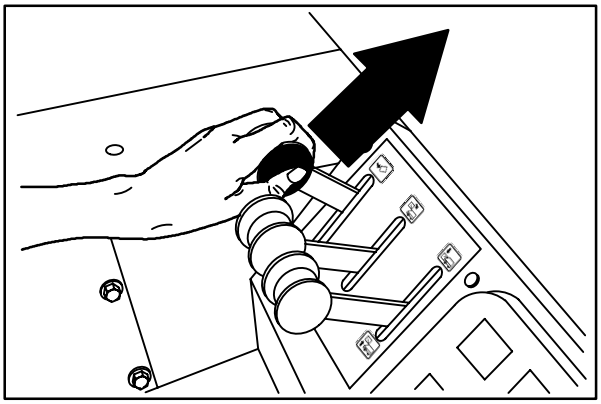

08476

HOPPER ROLLOUT LEVER

The hopper rollout lever moves the hopper in and out.

Out: Pull and hold the hopper rollout lever in the **Out** position.

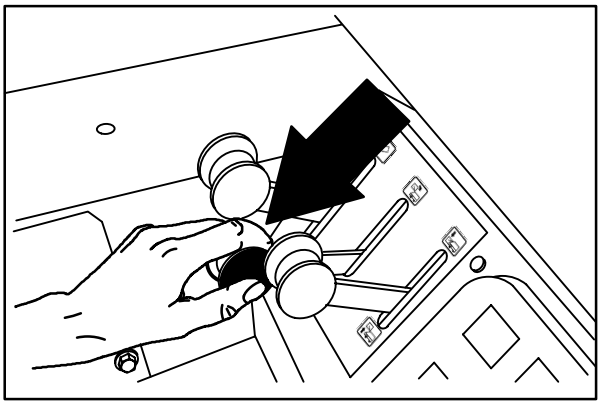

08477

Hold: Release the hopper rollout lever into the middle position.

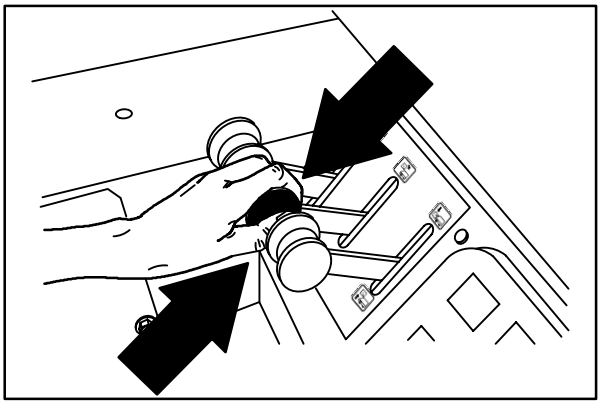

08478

In: Push and hold the hopper rollout lever in the **In** position.

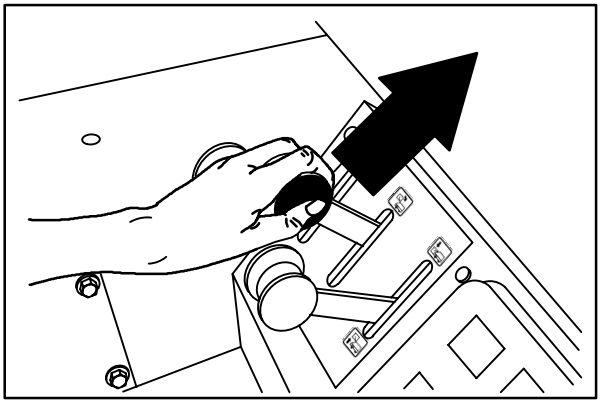

08479

HOPPER LIFT LEVER

The hopper lift lever raises and lowers the hopper.

Raise: Pull and hold the hopper lift lever in the **Up** position.

WARNING: Raised hopper may fall. Engage hopper support bar.

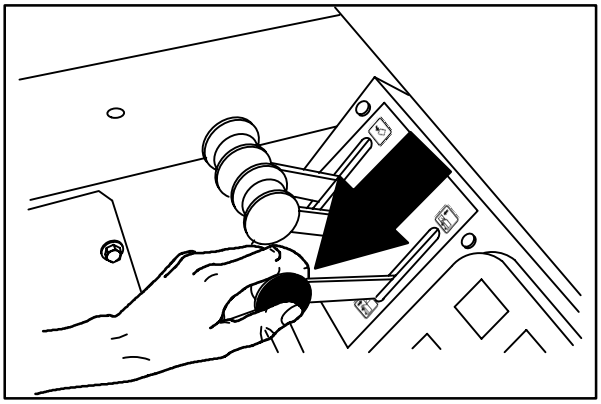

08480

Hold: Release the hopper lift lever up and into the middle position.

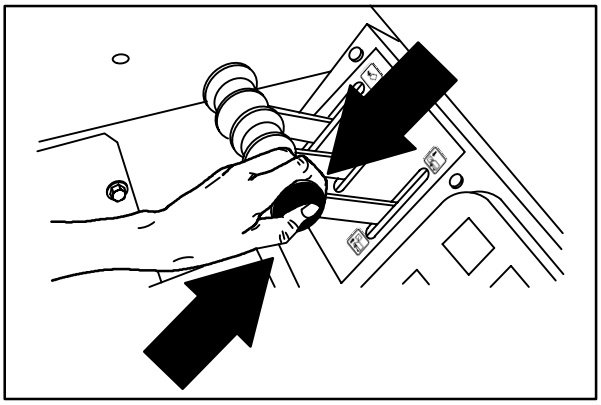

08481

Lower: Push and hold the hopper lift lever in the **Down** position.

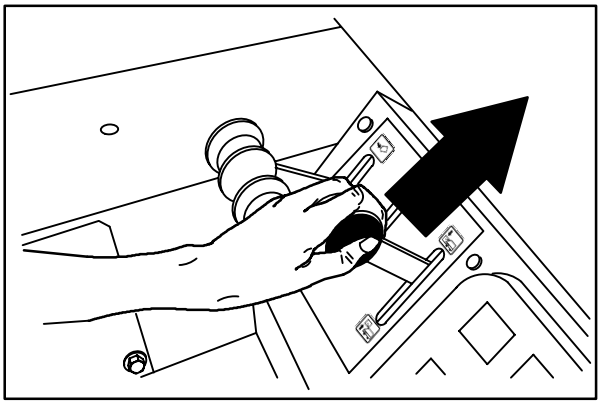

08482

HORN BUTTON

The horn button operates the horn.

Sound: Press the button.

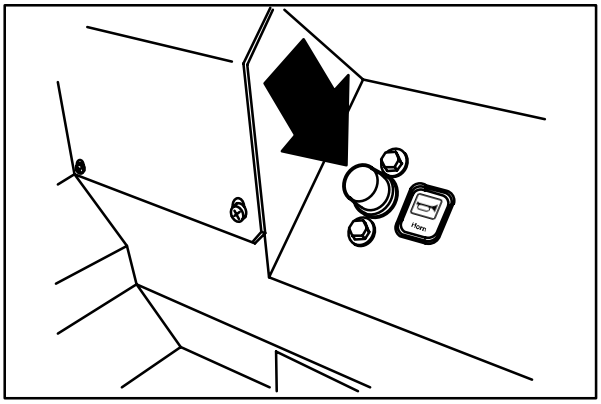

08438

CHARGING SYSTEM LIGHT

The charging system light comes on when the existing voltage potential of the battery is not within normal range – 10 to 14 Volts. Stop operating the machine. Locate the problem and have it corrected.

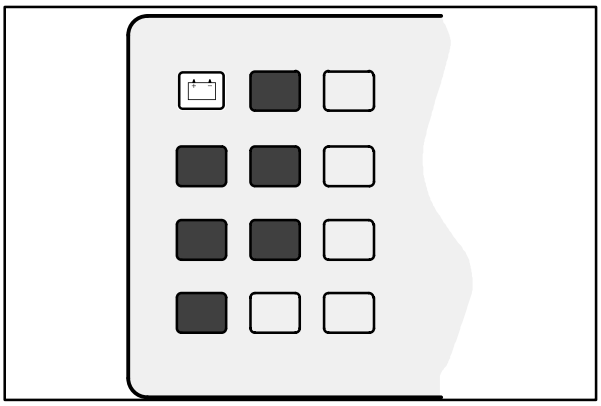

07757

ENGINE OIL PRESSURE LIGHT

The engine oil pressure light comes on when the engine oil pressure falls below 35 kPa (5 psi). Stop operating the machine. Locate the problem and have it corrected.

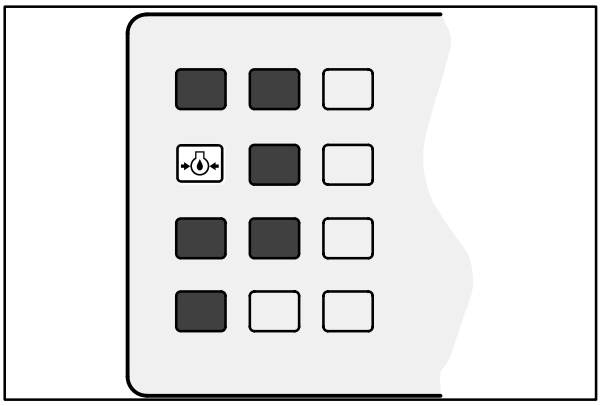

07758

ENGINE WATER TEMPERATURE LIGHT

The engine water temperature light comes on when the temperature of the engine coolant is more than 107° C (225° F). Stop operating the machine. Locate the problem and have it corrected.

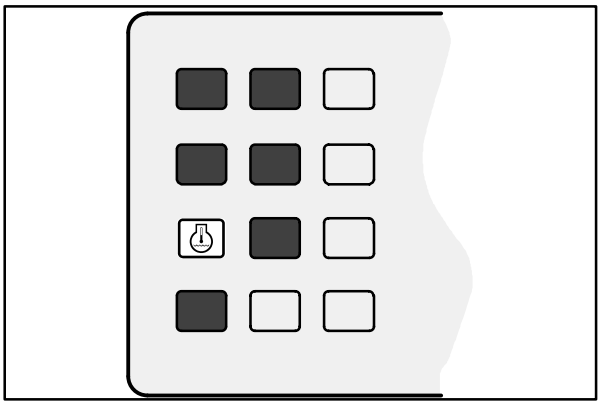

07759

HOPPER TEMPERATURE LIGHT – THERMO SENTRY™

The hopper temperature light comes on when there is too much heat in the hopper, possibly from a fire. The Thermo Sentry™ will stop the vacuum fan.

The Thermo Sentry™ has to be reset manually, see *THERMO SENTRY* in *MAINTENANCE.*

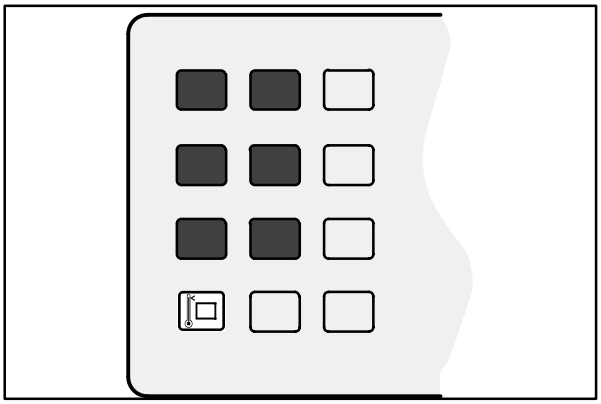

07760

MAIN BRUSH SHUT DOWN LIGHT

The main brush shut down light comes on when there is excessive down pressure for the main brush, or there is a problem with the main and side brush hydraulic motor circuit. The brush pressures can be reduced with the main brush and side brush pressure knobs.

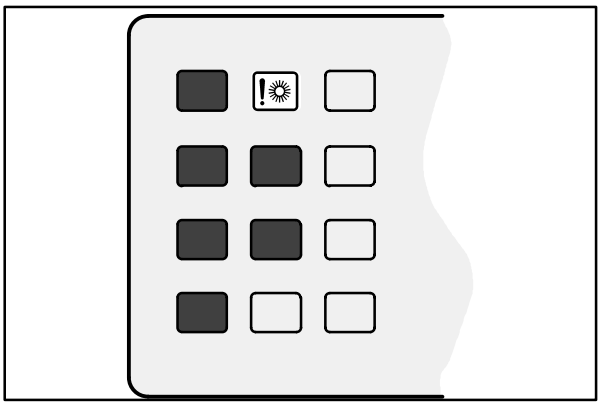

07761

CLOGGED FILTER LIGHT

The clogged filter light comes on when the hopper dust filter is clogged. If the machine is equipped with a Regenerative Filter System (RFS) option, the light will remain on for a few seconds each time the RFS cycles.

To clean the filter, press the filter shaker switch. If the clogged filter light remains lit, manually clean the hopper dust filter. See *HOPPER DUST FILTER* in *MAINTENANCE.*

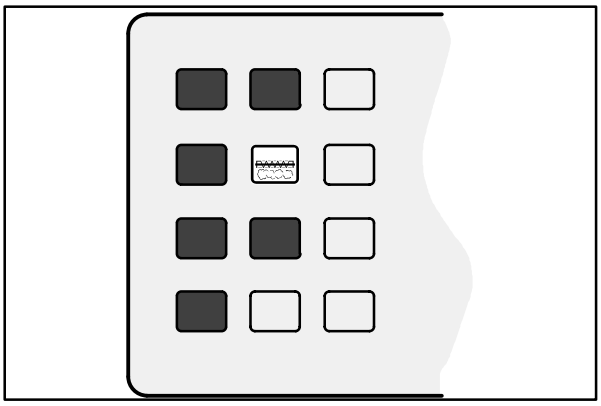

07762

HOPPER DOOR LIGHT (OPTION)

The hopper door light comes on when the hopper door is open. Make sure the hopper door is closed and the hopper door light is off, before sweeping with the machine.

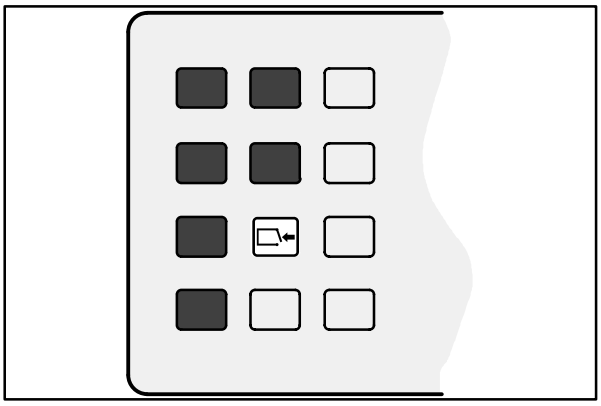

07763

FUEL LEVEL GAUGE

The fuel level gauge indicates how much fuel is in the fuel tank with a segmented LED light. When the tank is full, all ten of the segments are lit. As the fuel tank empties, the segments shut off. The fuel tank is empty when all ten of the segments have shut off.

NOTE: Do not let the fuel tank empty completely. Air can enter the fuel system. The fuel system will need bleeding before the next engine start.

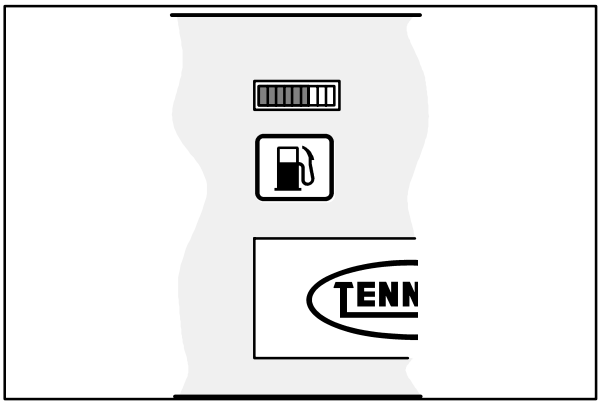

07764

HOURMETER

The hourmeter records the number of hours the machine has been operated. Use this information to determine machine maintenance intervals.

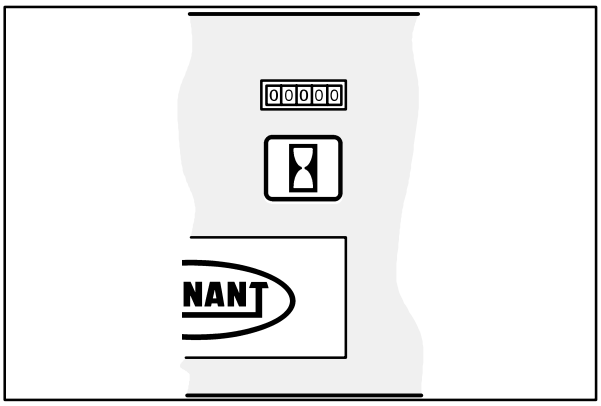

07765

HAZARD LIGHT SWITCH (OPTION)

The hazard light switch powers on and off the hazard light.

On: Press the hazard light switch. The indicator light above the switch will come on.

Off: Press the hazard light switch. The indicator light above the switch will go off.

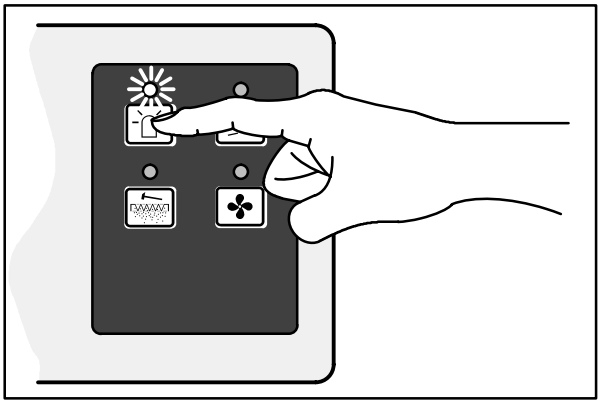

08228

OPERATING LIGHTS SWITCH

The operating lights switch powers on and off the headlights and taillights.

On: Press the operating lights switch. The indicator light above the switch will come on.

Off: Press the operating lights switch. The indicator light above the switch will go off.

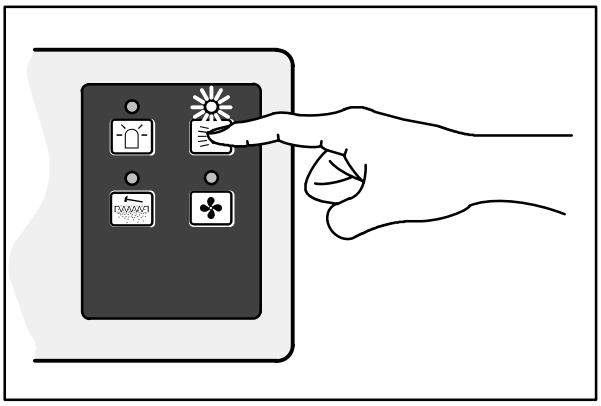

08230

FILTER SHAKER SWITCH

The filter shaker switch starts the hopper dust filter shaker. The shaker automatically operates for 40 seconds.

Start: Press the filter shaker switch. The indicator light will remain on while the filter shaker is operating.

Stop: Press the filter shaker switch again ***IF*** wanting to stop the filter shaker during the 40 second shaking cycle.

NOTE: The vacuum fan shuts off while the filter shaker is operating.

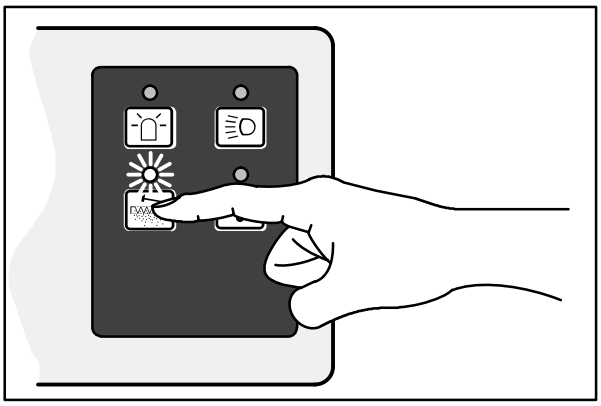

08229

VACUUM FAN SWITCH

The vacuum fan switch starts and stops the vacuum fan.

Start: Press the vacuum fan switch. The indicator light above the switch will come on.

Stop: Press the vacuum fan switch. The indicator light above the switch will go off.

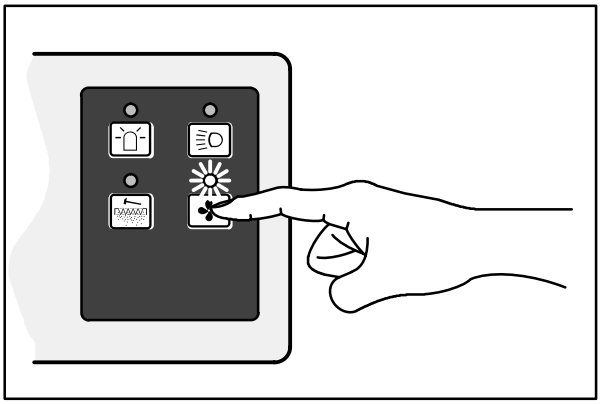

08231

IGNITION SWITCH

The ignition switch starts and stops the engine with a key.

Preheat: Turn the key clockwise. The glow plugs light will come on. When the glow plug light goes out, usually for 5 to 15 seconds depending on the weather conditions, the engine is ready to start.

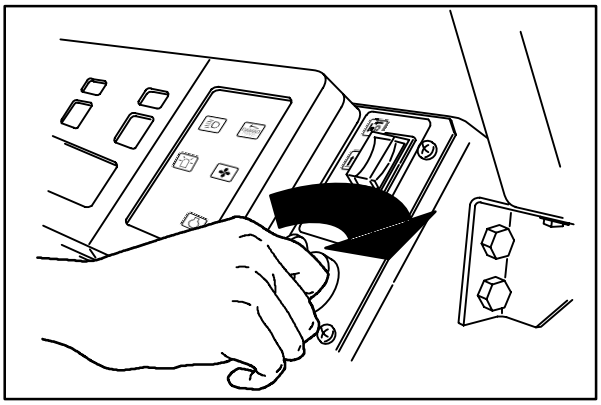

08460

Start: Turn the key all the way clockwise. Release the key as soon as the engine starts.

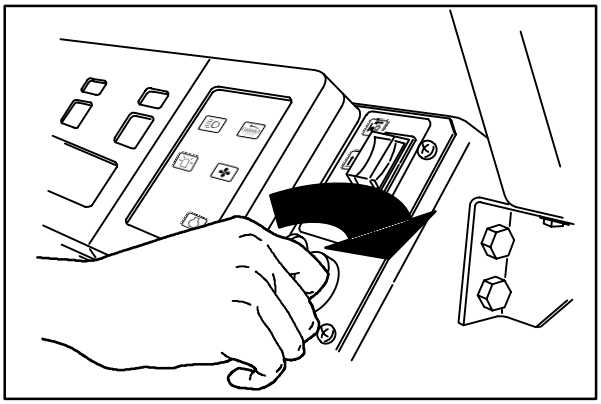

08460

Stop: Turn the key counter-clockwise.

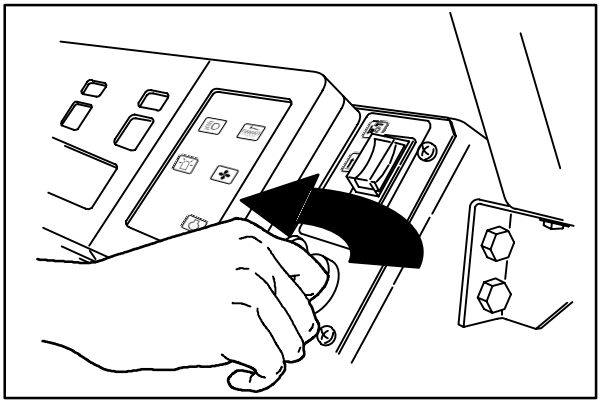

08461

MAIN BRUSH SWITCH

The main brush switch controls the main brush position and rotation.

Main Brush Down and Normal Speed: Press the top **Normal** position of the switch.

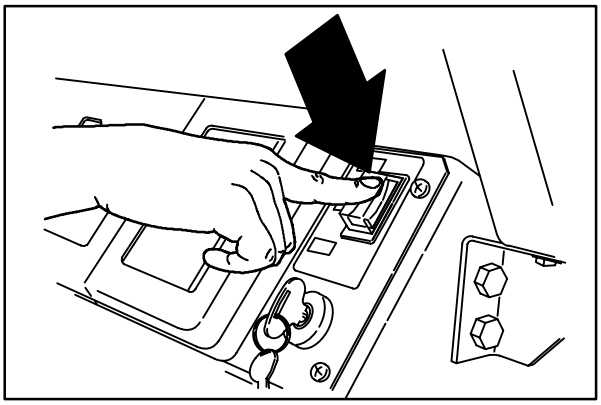

08462

Main Brush Up and Off: Place the switch in the middle **Off** position.

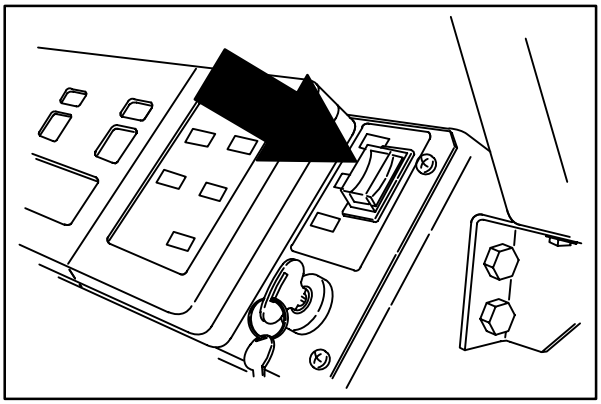

08464

Main Brush Down and II Speed™: Press the bottom **II Speed™** position of the switch.

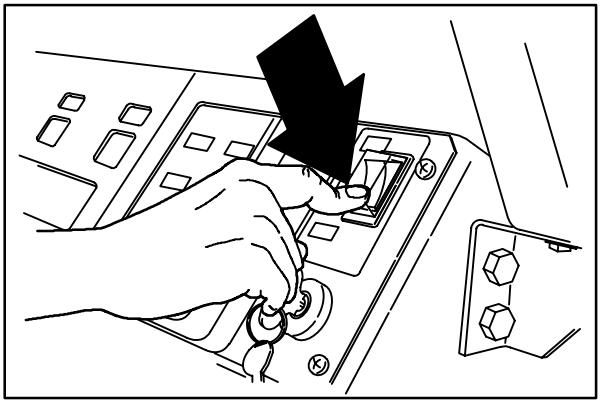

08463

STEERING WHEEL

The steering wheel controls the machine's direction. The machine is very responsive to the steering wheel movements.

Left: Turn the steering wheel to the left.

Right: Turn the steering wheel to the right.

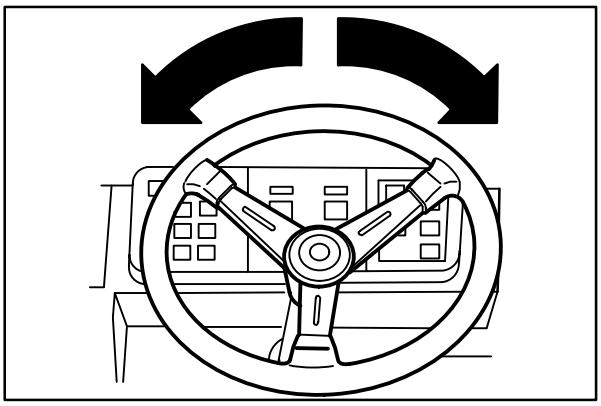

08484

STEERING WHEEL TILT LEVER

The steering wheel tilt lever controls the angle of the steering wheel.

Adjust: Pull out the tilt lever, move the wheel up or down, and release the tilt lever.

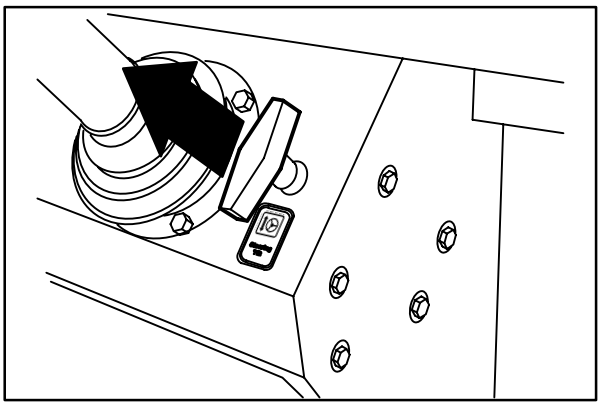

08439

BLOWER WAND LEVER (OPTION)

The blower wand lever controls the air flow through the optional blower wand.

On: Move the lever to the left.

Off: Move the lever to the right.

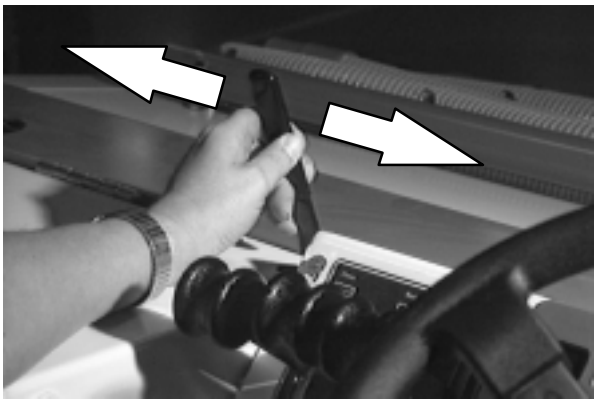

CIRCUIT BREAKERS

The circuit breakers are resetable electrical circuit protection devices. Their design stops the flow of current in the event of a circuit overload. Once a circuit breaker is tripped, it must be reset manually. Press the reset button after the breaker has cooled down.

If the overload that caused the circuit breaker to trip is still there, the circuit breaker will continue to stop current flow until the problem is corrected.

The circuit breakers are located in the operator compartment.

The chart lists the circuit breakers and the electrical components they protect.

Circuit Breaker	Rating	Circuit Protected
CB-1	15 A	Horn
CB-2	15 A	Filter shaker
CB-3	15 A	Controls
CB-4	15 A	Instrument panel
CB-5	15 A	Hazard light
CB-6	2.5 A	Brushes
CB-7	15 A	Left side brush option
CB-8	15 A	Accessories
CB-9	15 A	Accessories

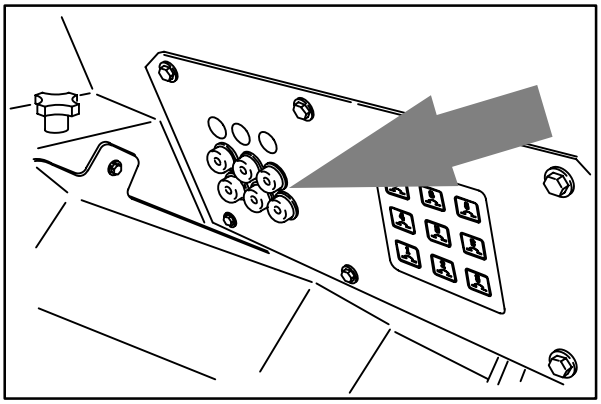

08440

GLOW PLUGS LIGHT

The glow plugs light comes on when the ignition switch is turned clockwise to the start position. The light will go out when the engine is ready to start, usually 5 to 15 seconds depending on the weather conditions.

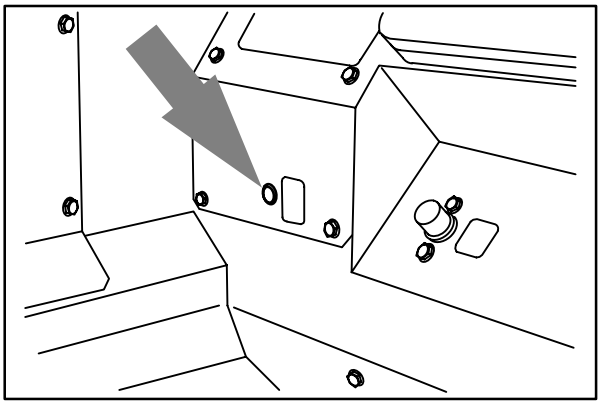

08927

MAIN BRUSH DOWN PRESSURE KNOB

The main brush down pressure knob changes the main brush contact with the sweeping surface.

Increase Pressure: Turn the main brush down pressure knob counter-clockwise.

Decrease Pressure: Turn the main brush down pressure knob clockwise.

LATCHES

The side doors, rear door, engine cover, and hopper cover are secured with latches.

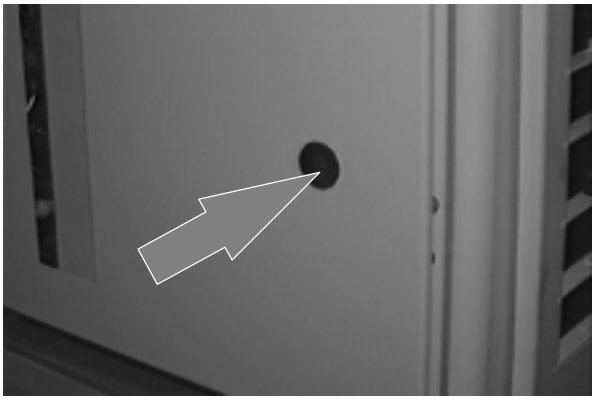

Open the Main Brush Side Doors: Pull up on the door latch.

Open the Engine Side Door: Pull up on the door latch.

Open the Rear Door: Push the latch to the left.

Open the Engine Cover: Push in on the cover latch.

Open the Hopper Cover: Push the latch to the right.

Open Rear Bumper Door: Push the latch to the left.

OPERATOR SEAT

The operator seat has two adjustments. The adjustments are for the front to rear seat position and ride stiffness.

The seat front-to-rear position is adjusted by the seat position lever.

Adjust: Push the lever forward, slide the seat backward or forward to the desired position and release the lever.

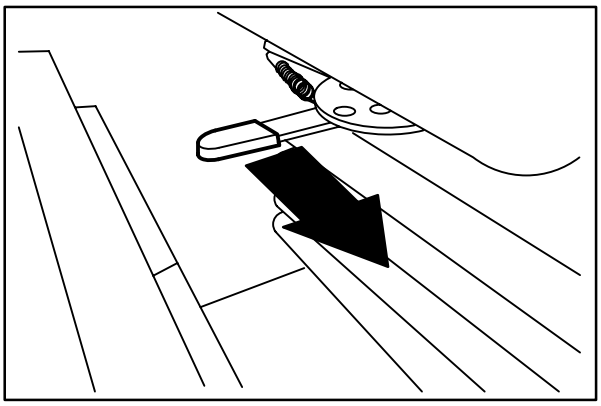

08443

The ride stiffness is adjusted with the stiffness knob.

Adjust: Turn the knob clockwise to increase the ride stiffness, and counter-clockwise to decrease the ride stiffness.

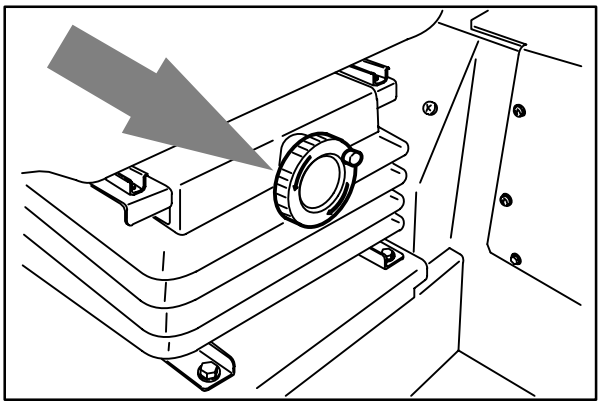

08444

Lift: Pull up on the seat mounting plate until the seat mount locks up.

Lower: Pull on the release lever and lower the seat mounting plate.

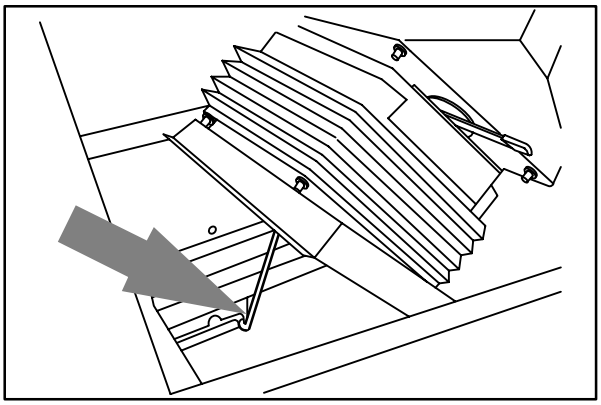

08445

HOPPER SUPPORT BAR

The hopper support bar is located on the operator's side of the hopper. The hopper support bar holds the hopper in the raised position to allow work under the hopper. DO NOT rely on the machine hydraulic system to keep the hopper raised.

WARNING: Raised hopper may fall. Engage hopper support bar.

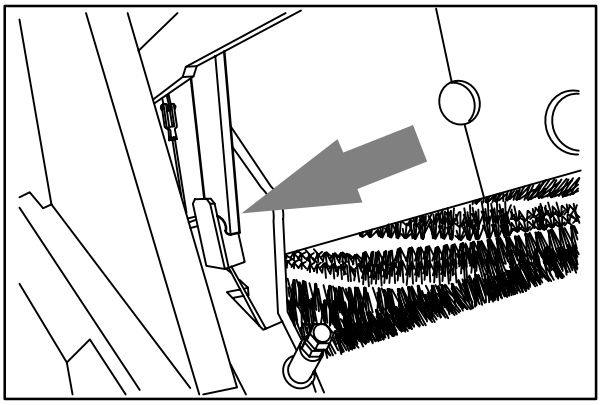

08446

WINDSHIELD WIPER SWITCH (OPTION)

The windshield wiper switch operates the windshield wiper on the cab option.

On: Pull out on the switch.

Off: Push in on the switch.

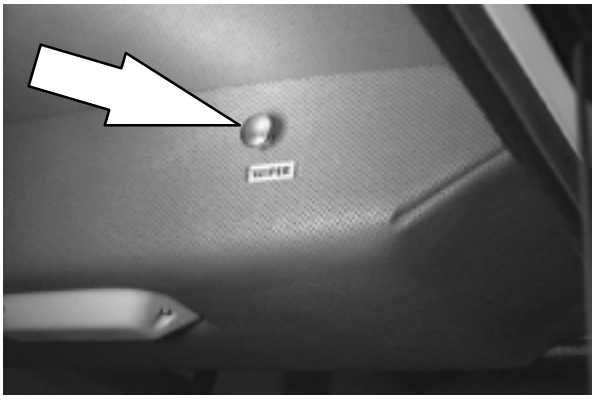

DOME LIGHT SWITCH (OPTION)

The dome light switch controls the dome light on the cab option.

On: Press on the switch.

Off: Press on the switch again.

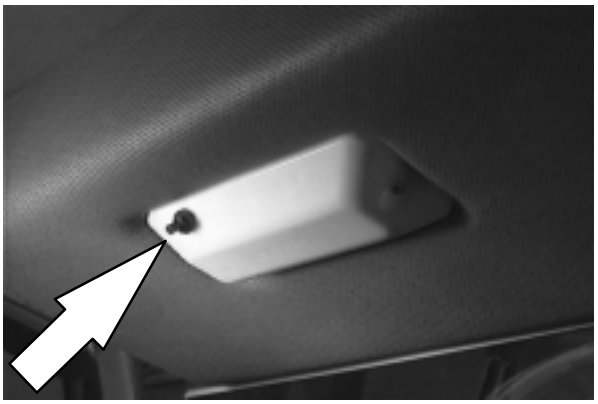

RECIRCULATING AIR LOUVERS (OPTION)

The optional recirculating air louvers recirculates the cab air through the temperature core. This will maximize either the heated or cooled air when opened.

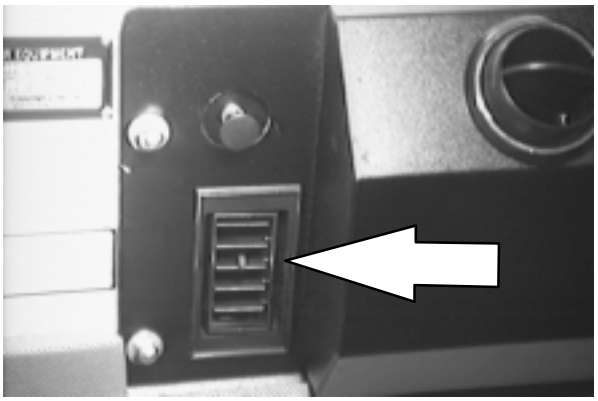

HEATER KNOB (OPTION)

The heater knob controls the cab heater on the cab option.

On: Pull the knob out until the air temperature is at the desired comfort level. For maximum heat, pull the knob out all the way.

Off: Push the knob in all the way.

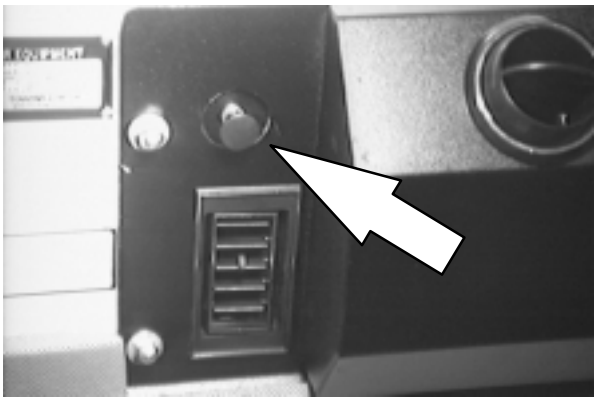

FAN SPEED SWITCH (OPTION)

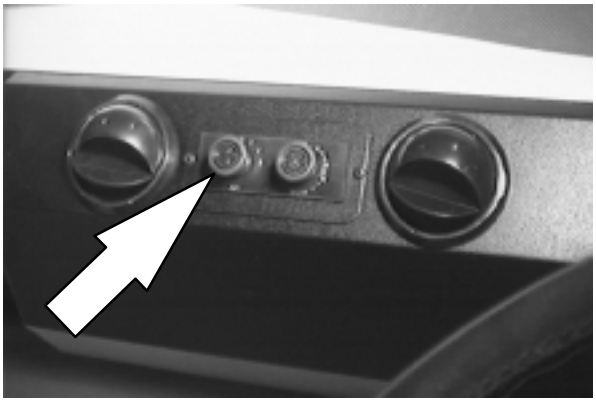

The fan speed switch controls the speed of the fan in the cab option. The pressurizer can be operated at three speeds.

Slow: Turn the switch clockwise to the first setting.

Medium: Turn the switch clockwise to the second setting.

Fast: Turn the switch clockwise to the third setting.

Off: Turn the switch counter–clockwise to the off setting.

AIR CONDITIONING SWITCH (OPTION)

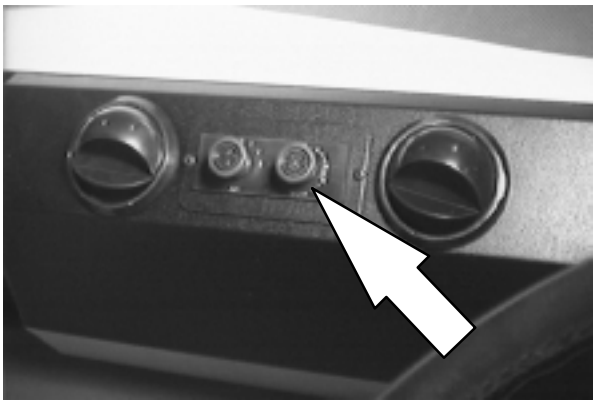

The air conditioning switch operates the cab's air conditioner in the optional cab.

On: Turn the switch clockwise until the air temperature is at the desired comfort level. For maximum cooling, turn the switch clockwise all the way to the maximum position.

Off: Turn the switch counter–clockwise all the way to the off position.

AIR CONTROL VENTS (OPTION)

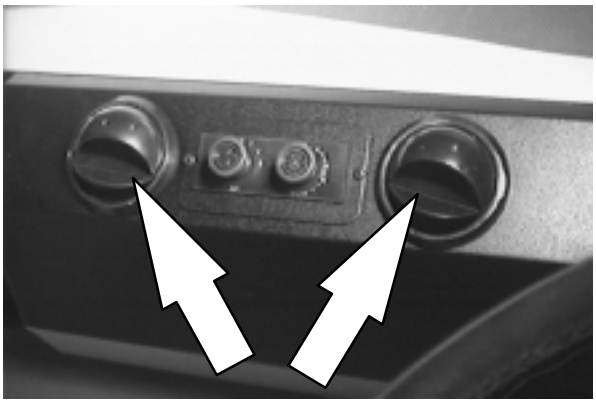

The air control vents control the direction of the air flow in an optional cab. Turn the vents until they meet your desired comfort level. For defrosting, direct the air control vents onto the windows. This creates warm, dry air which works best for defrosting. If this causes the windows to fog, turn on the air conditioner for drier air.

HOW THE MACHINE WORKS

The steering wheel controls the direction of machine travel. The directional pedal controls the speed and forward/reverse direction. The brake pedal slows and stops the machine.

The side brush sweeps debris into the path of the main brush. The main brush sweeps debris from the floor into the hopper. The vacuum system pulls dust and air through the hopper and the hopper dust filters.

When sweeping is finished, clean the hopper dust filter and empty the hopper.

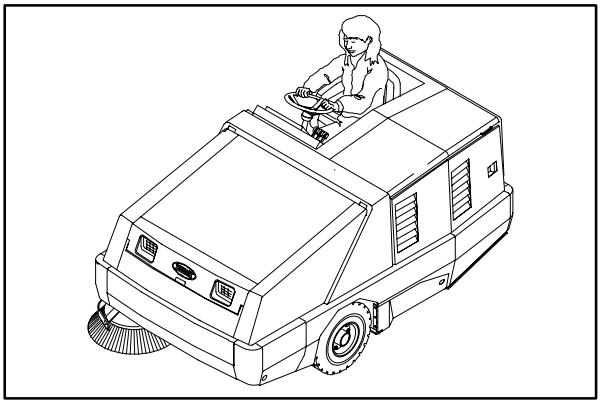

08580

PRE-OPERATION CHECKLIST

❑ Check under the machine for leaks (fuel, oil, coolant).

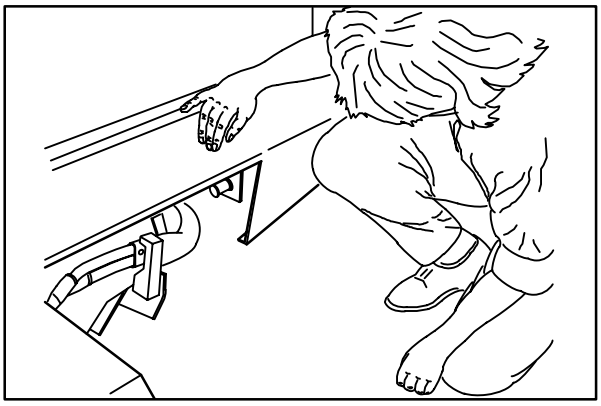

07807

❑ Check the engine air filter indicator.

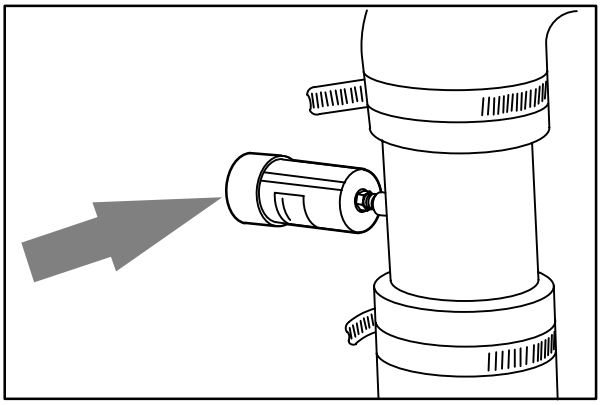

08447

❑ Check the engine oil level.

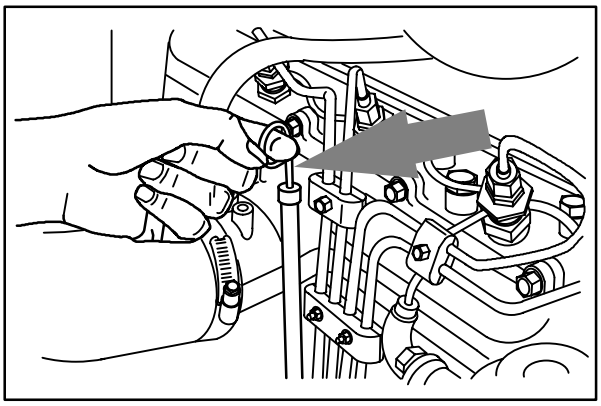

08431

❑ Check fuel level.

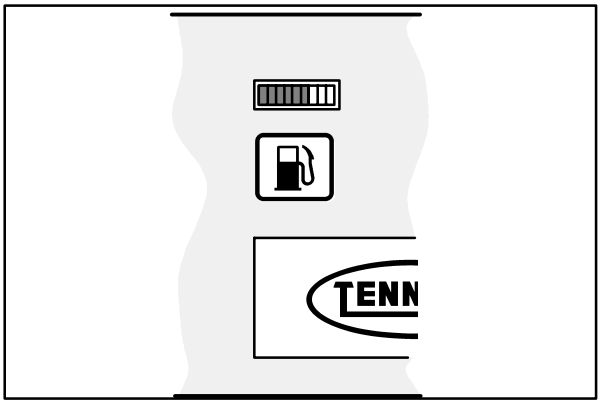

07764

❑ Check the brakes and steering for proper operation.

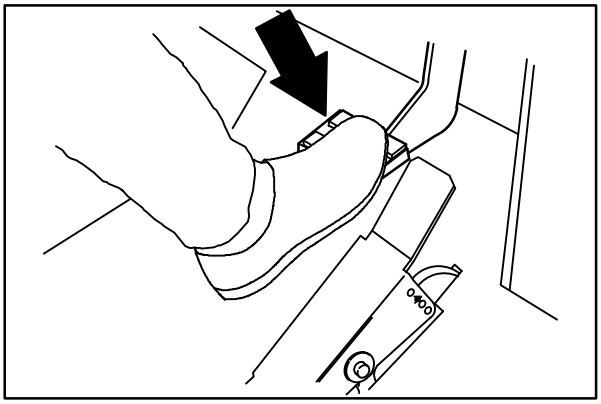

08471

STARTING THE MACHINE

1. You must be in the operator's seat with the directional pedal in neutral, and your foot on the brake pedal or with the parking brake set.

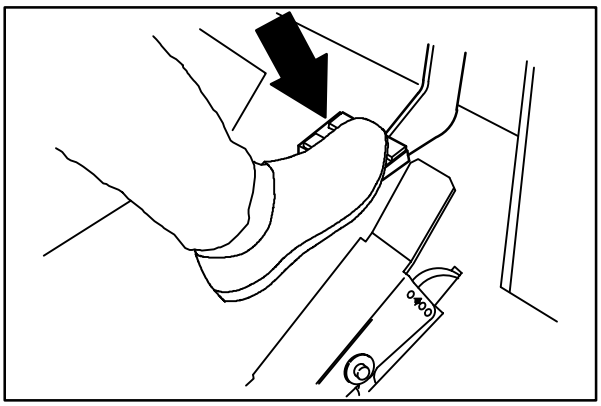

08471

2. Move the throttle lever to the **Idle** position.

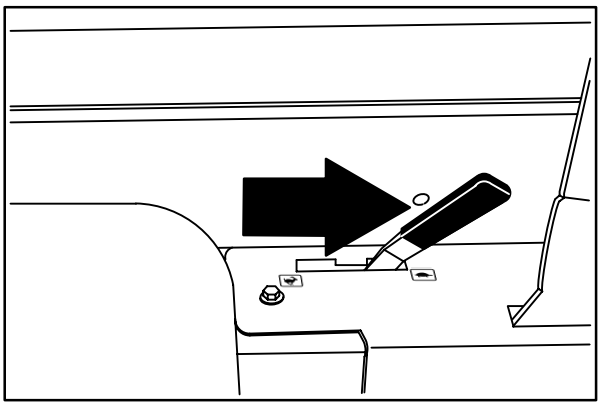

08457

3. Turn the key clockwise. The glow plugs light will come on. When the glow plug light goes out, usually for 5 to 15 seconds depending on the weather conditions, the engine is ready to start.

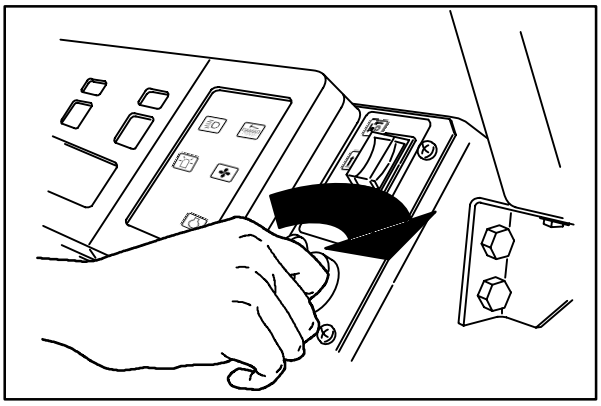

08460

4. Turn the ignition switch key clockwise until the engine starts.

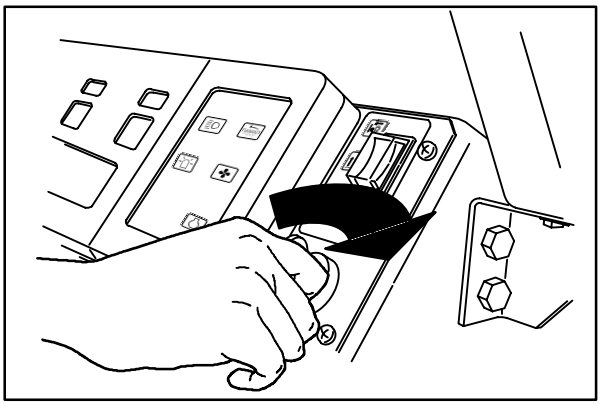

08460

NOTE: Do not operate the starter motor for more than 10 seconds at a time or after the engine has started. Allow the starter to cool between starting attempt or damage to the starter motor may occur.

5. Allow the engine and hydraulic system to warm up three to five minutes.

WARNING: Engine emits toxic gases. Severe respiratory damage or asphyxiation can result. Provide adequate ventilation. Consult with your regulatory authorities for exposure limits. Keep engine properly tuned.

6. Release the machine parking brake.

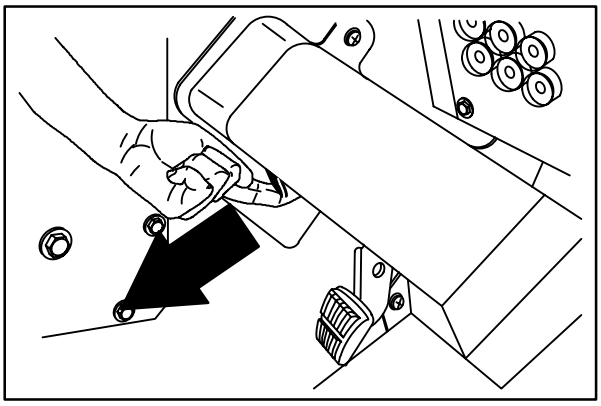

08435

7. Move the throttle lever to the **Fast** position.

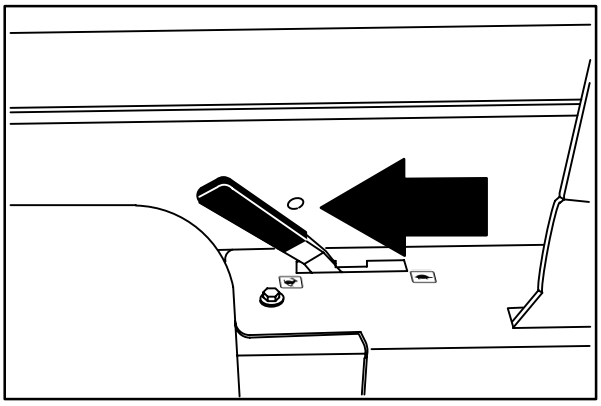

08456

8. Drive the machine to the area to be swept.

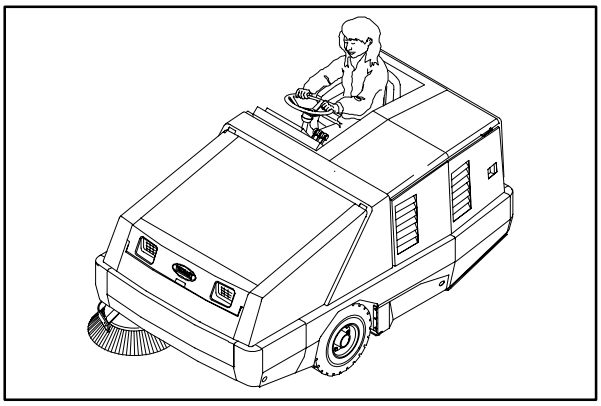

08580

SWEEPING AND BRUSH INFORMATION

Pick up oversized debris before sweeping. Flatten or remove bulky cartons from aisles before sweeping. Pick up pieces of wire, twine, string, etc., which could become entangled in brush or brush plugs.

Plan the sweeping in advance. Try to arrange long runs with minimum stopping and starting. Sweep debris from very narrow aisles into main aisles ahead of time. Do an entire floor or section at one time. Sweep as straight a path as possible. Avoid bumping into posts or scraping the sides of the sweeper. Overlap the brush paths.

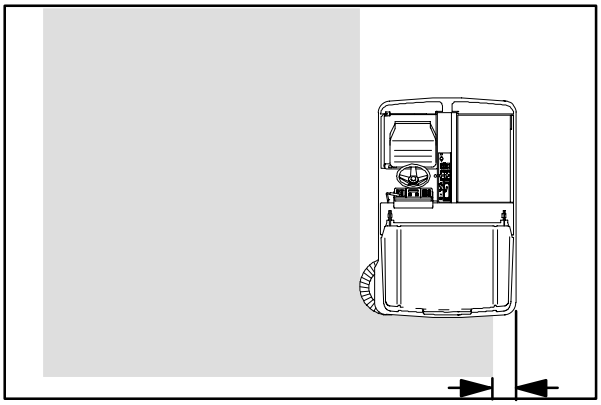

07817

Avoid turning the steering wheel too sharply when the machine is in motion. The machine is very responsive to the movement of the steering wheel. Avoid sudden turns, except in emergencies.

Use main brush **II Speed**™ when picking up light litter. This will improve both litter pickup and hopper loading. Do not use the **II Speed**™ speed in dusty environments. The machine can dust and clog the hopper dust filter. Operate the main brush in the **Normal** position when picking up general debris.

For best results, use the correct brush type for your sweeping application. The following are recommendations for main and side brush applications.

Polypropylene 8-double Row Main Brush – Gives superior pickup of sand, gravel, and paper litter. Retains its stiffness when wet, and can be used indoor or out. Not recommended for high-temperature debris.

Polypropylene and Wire 8-double Row Main Brush – The wire bristles loosen slightly packed soilage and heavier debris. The polypropylene bristles sweep up the debris with excellent hopper loading.

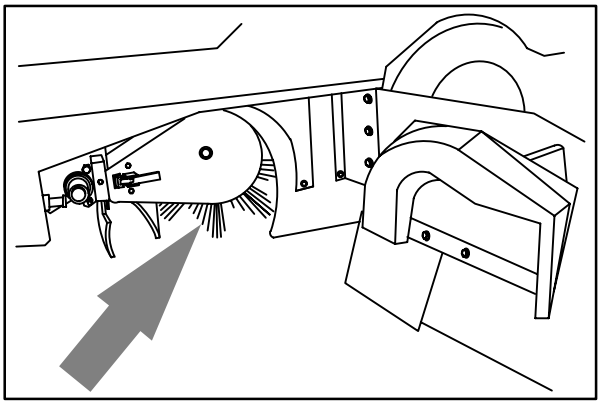

08587

Crinkle Wire 8-double Row Main Brush – The stiff wire bristles cut through compacted grime, hard to sweep dirt, and dirt mixed with oil, grease, or mud. This brush is recommended for foundry sweeping where heat may melt synthetic bristles. This brush has good hopper loading ability, but is not recommended for dusty applications.

Nylon 24-row Main Brush – Recommended for severe dust conditions on rough surfaces. This brush has excellent pickup and long life.

Nylon Patrol Main Brush – Designed for sweeping large indoor or outdoor areas at higher speed. The patrol pattern gives excellent loading of light bulky debris (leaves and paper), while the nylon bristle gives long life.

Heavy Gauge Polypropylene 8-double Row Main Brush – Designed for sweeping outdoor areas. The stiffer bristles allow excellent loading of heavier bulky debris (leaves and paper litter).

Polypropylene Side Brush – A good general purpose brush for sweeping of light to medium debris in both indoor and outdoor applications. This brush is recommended when bristles may get wet.

Nylon Side Brush – A longer life, general purpose brush that is recommended for rough surfaces.

Flat Wire Side Brush – Recommended for outside and curb-side sweeping where soilage is heavy or compacted. The stiff wire bristles dig out soilage. This brush is also recommended for foundry sweeping where heat may melt synthetic bristles.

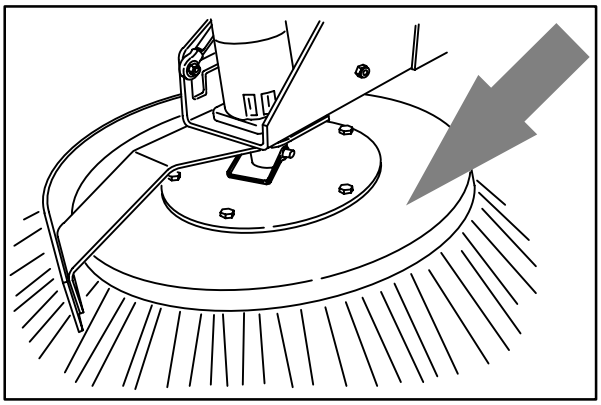

08588

SWEEPING

1. The hopper door has to be closed during sweeping. If your machine has the hopper door light option, make sure the hopper door light is off. If the hopper door light is on, close the hopper door.

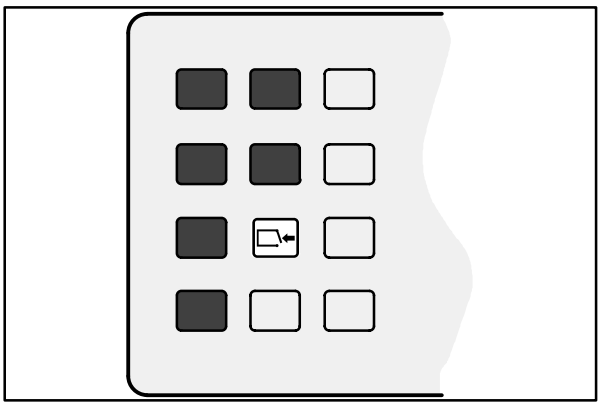

07763

2. Place the main brush switch in the **Normal** or **II Speed**™ position.

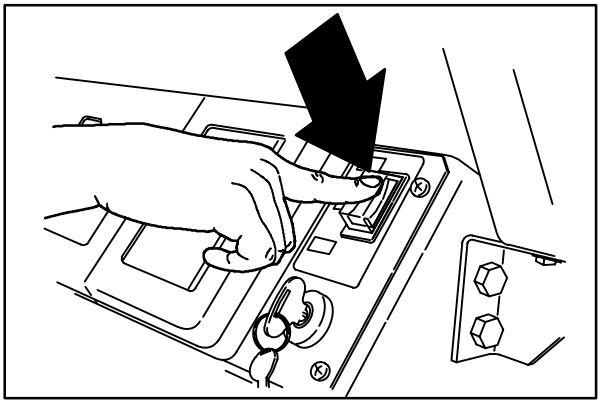

08462

3. For machines below serial number 001177, pull the side brush position lever back and to the right into the **On/Down** slot.

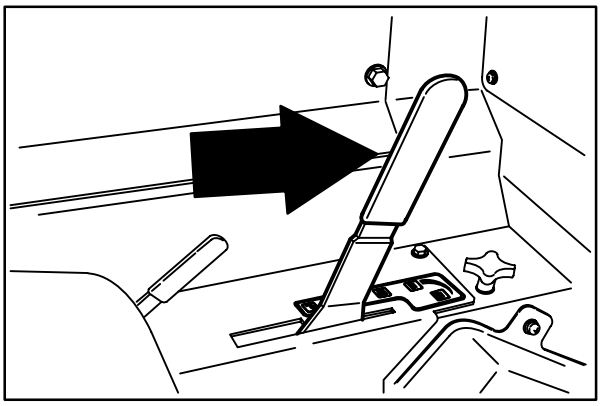

08458

For machines serial number 001177 and above, push the top of the side brush switch into the **On/Down** position.

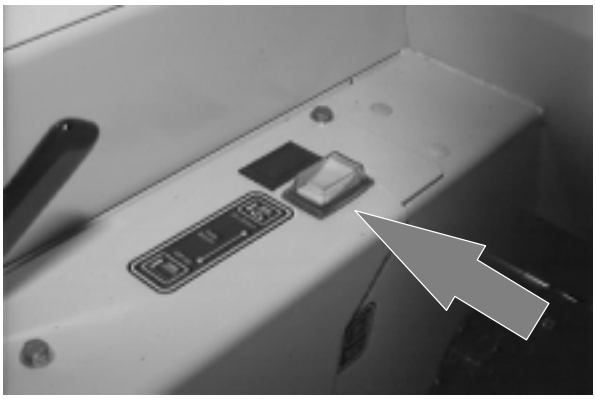

4. Press the vacuum fan switch to start the vacuum.

5. Sweep as needed.

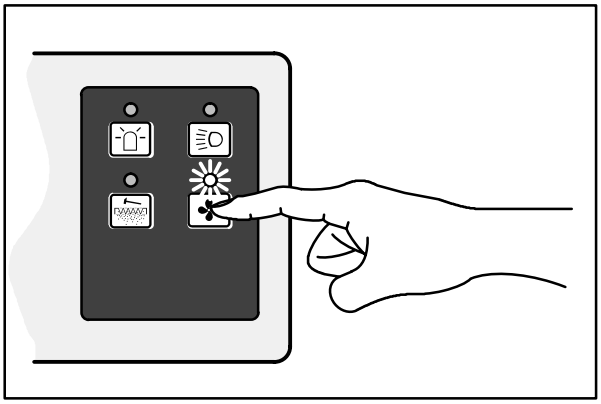

08231

STOP SWEEPING

1. For machines below serial number 001177, pull the side brush position lever back and to the left into the **Off/Up** slot.

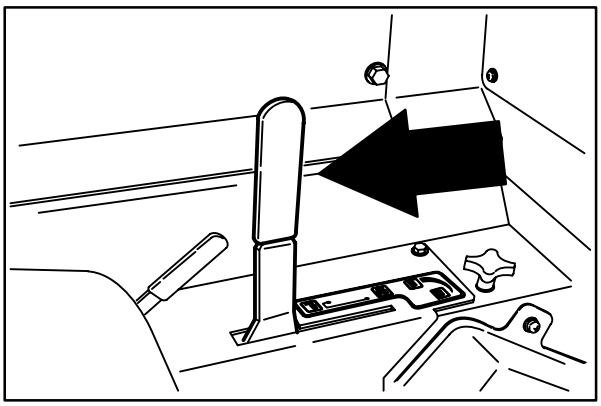

08459

For machines serial number 001177 and above, push the bottom of the side brush switch into the **Off/Up** position.

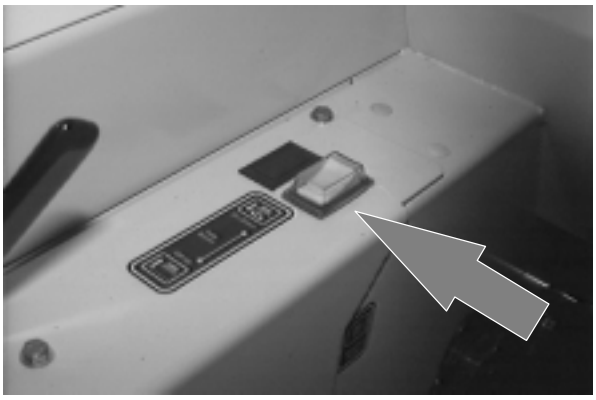

2. Place the main brush switch in the middle **Off** position.

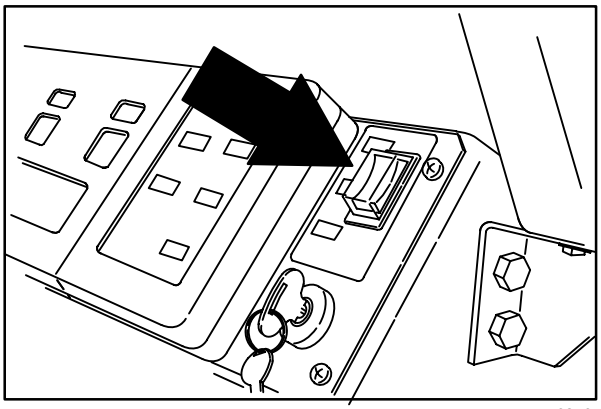

08464

3. Press the filter shaker switch to shake the hopper dust filter.

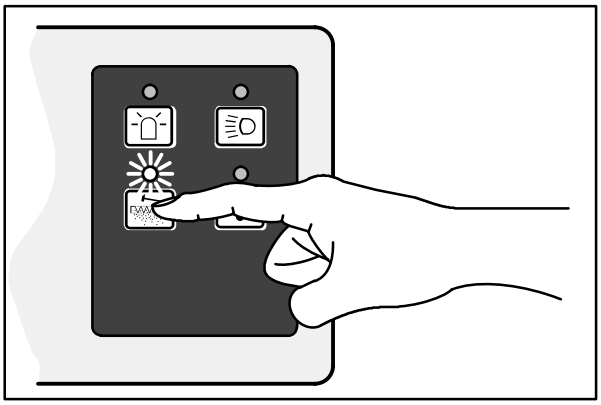

08229

EMPTYING THE HOPPER

1. Slowly drive the machine to the debris site or debris container.

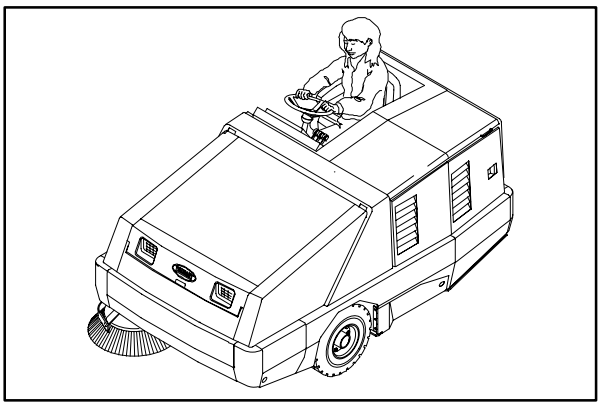

08580

2. Pull and hold the hopper lift lever in the **Up** position and raise the hopper to the desired height.

FOR SAFETY: When using machine, make sure adequate clearance is available before raising hopper.

NOTE: Be aware that the minimum ceiling height needed to high dump the hopper is 3355 mm (11 ft).

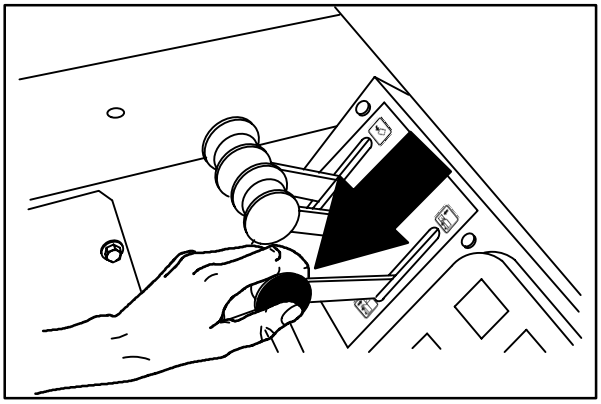

08480

3. Release the hopper lift lever up and into the middle (Hold) position.

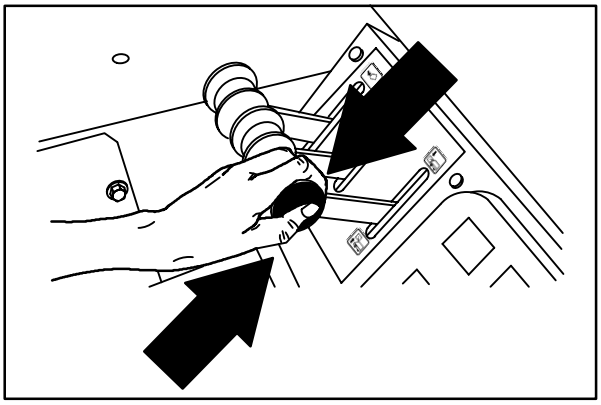

08481

4. Drive the machine up to the debris container.

FOR SAFETY: When using machine, move machine with care when hopper is raised.

5. Pull and hold the hopper rollout lever into the **Out** position.
6. Lower the hopper into the debris container to control dust.

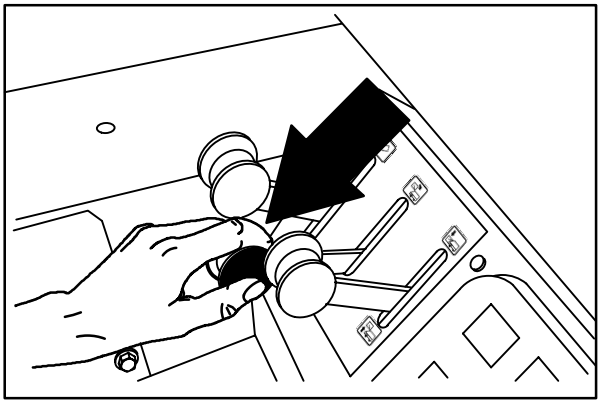

08477

7. Pull and hold the hopper door lever into the **Open** position.

8. Raise the hopper enough and/or close the hopper door to clear the top of the debris container.

9. Slowly back the machine away from the debris site or debris container.

FOR SAFETY: When using machine, move machine with care when hopper is raised.

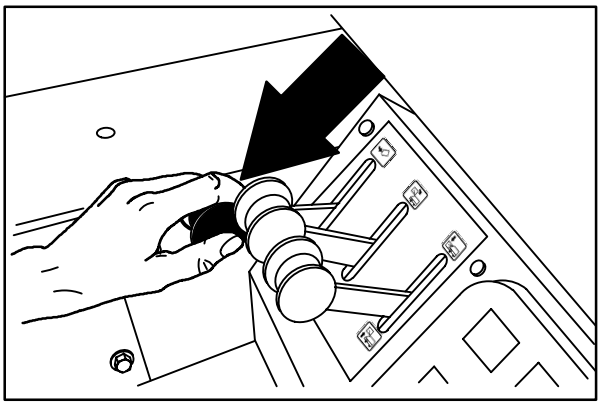

08474

10. Push and hold the hopper door lever into the **Close** position.

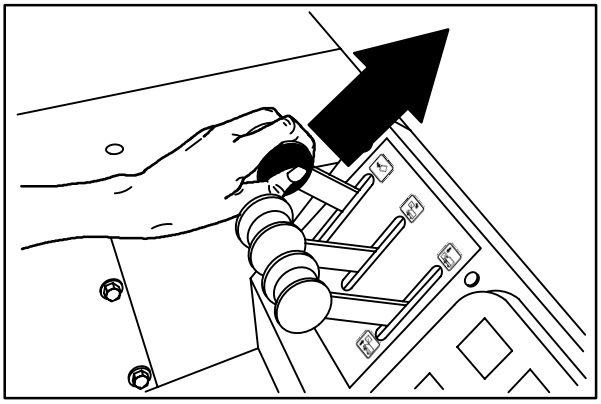

08476

11. Push and hold the hopper rollout lever into the **In** position.

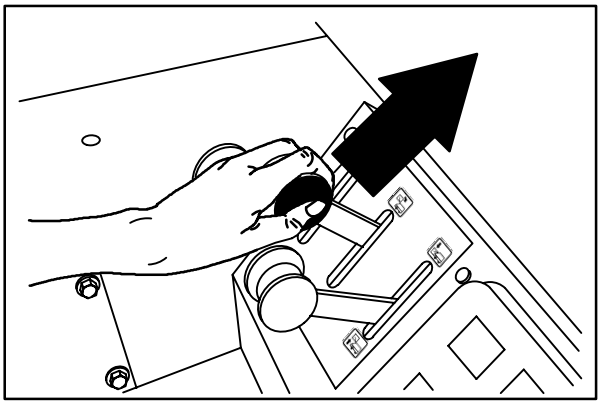

08479

12. Push and hold the hopper lift lever in the **Down** position.

NOTE: The hopper lift lever, hopper rollout lever, and the hopper door lever can be use together to lift the hopper, rollout the hopper, and open the hopper door.

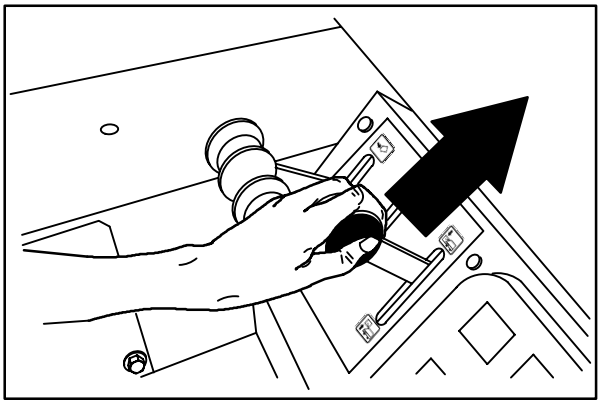

08482

STOP THE MACHINE

1. Stop sweeping.

2. Take your foot off the directional pedal. Step on the brake pedal.

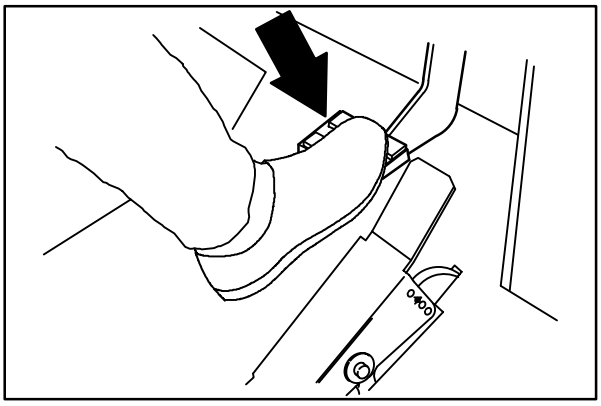

08471

3. Move the throttle lever to the **Idle** position.

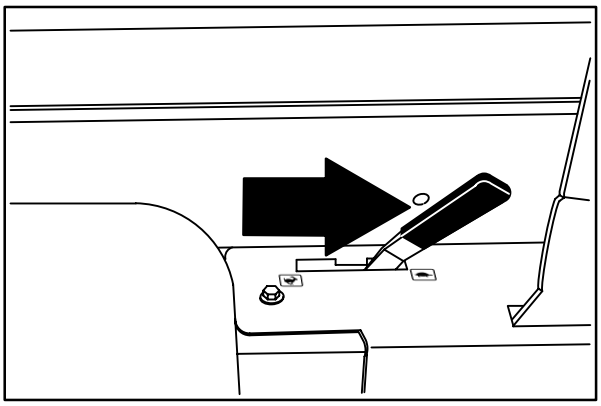

08457

4. Set the machine parking brake.

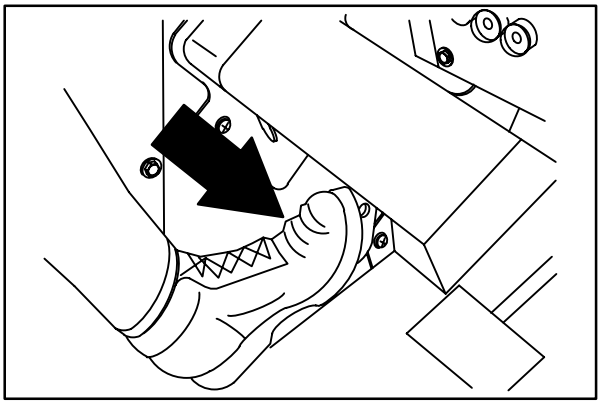

08434

5. Turn the ignition switch key counter-clockwise to stop the engine. Remove the switch key.

FOR SAFETY: Before leaving or servicing machine; stop on level surface, set parking brake, turn off machine and remove key.

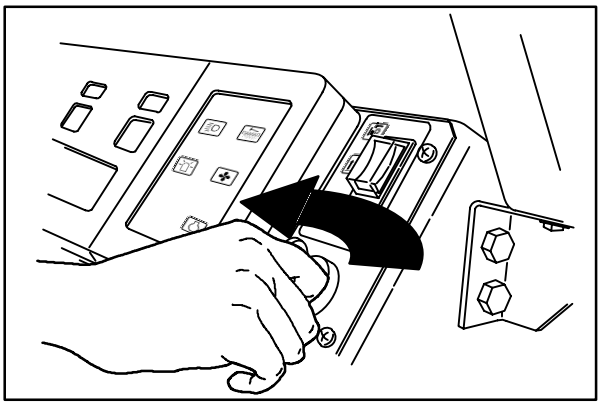

08461

POST-OPERATION CHECKLIST

- ❑ Check the brushes adjustment. See *TO CHECK AND ADJUST MAIN BRUSH PATTERN* and *SIDE BRUSH* in *MAINTENANCE*.
- ❑ Check the brush skirts for damage, wear, and adjustment.

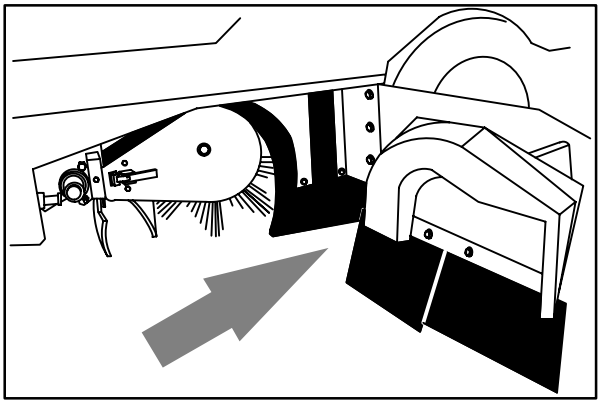

08493

- ❑ Check for wire or string tangled on the main and side brushes.

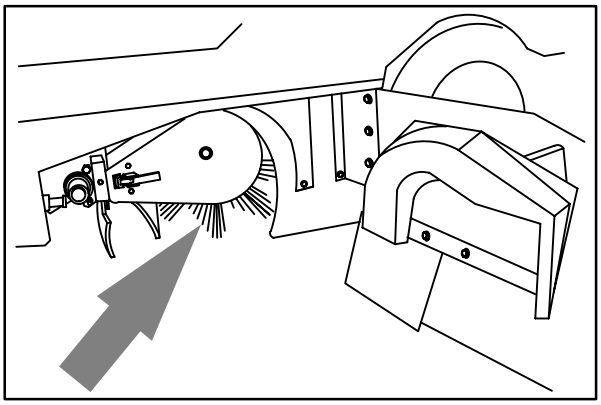

08587

- ❑ Check for fuel odor that indicates a fuel leak.
- ❑ Check under the machine for leak spots (fuel, oil, coolant).
- ❑ Check the service records to determine maintenance requirements.

ENGAGING HOPPER SUPPORT BAR

1. Set the machine parking brake.

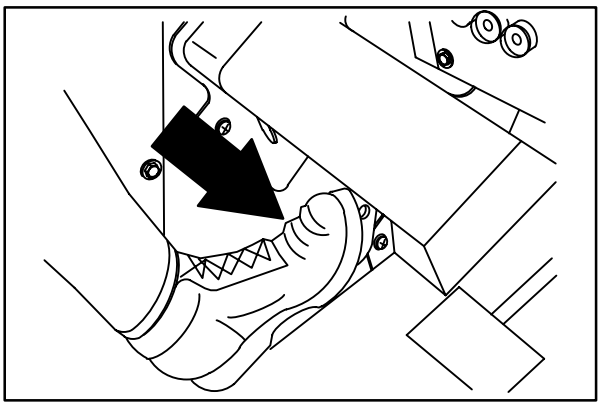

08434

2. Start the engine.

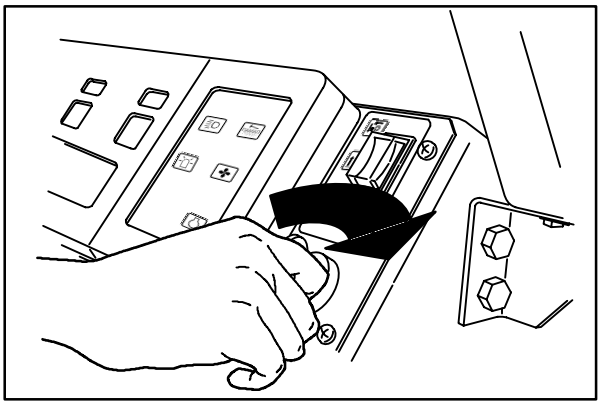

08460

3. Raise the hopper all the way up.

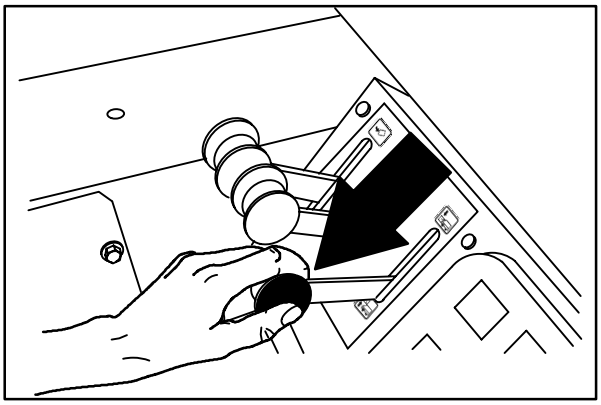

08480

4. Remove the support bar from the storage clip.

WARNING: Raised hopper may fall. Engage hopper support bar.

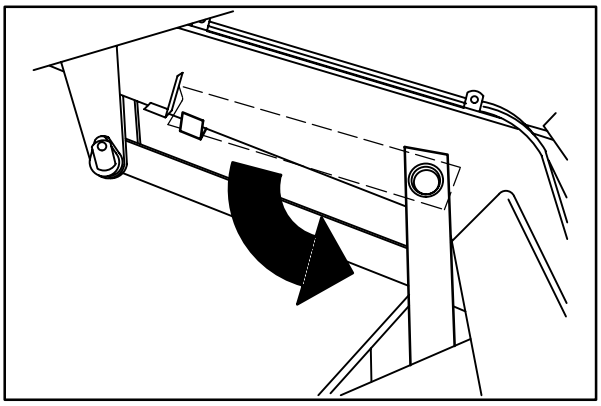

08589

5. Slowly lower the hopper so the support bar rests on the bar stop on the machine frame.

WARNING: Lift arm pinch point. Stay clear of hopper lift arms.

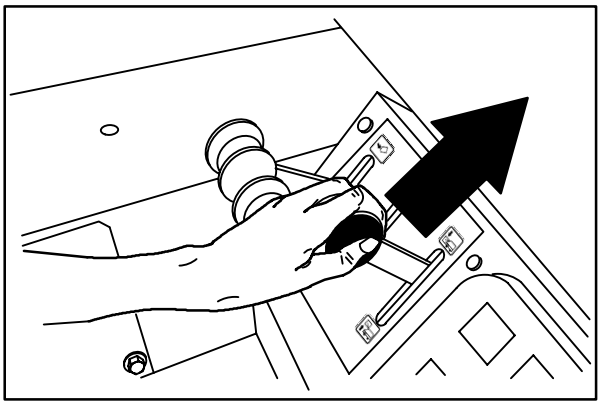

08482

6. Shut the engine off.

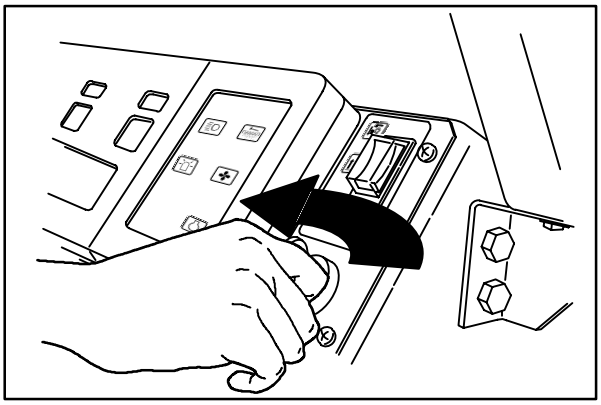

08461

DISENGAGING HOPPER SUPPORT BAR

1. Start the engine.

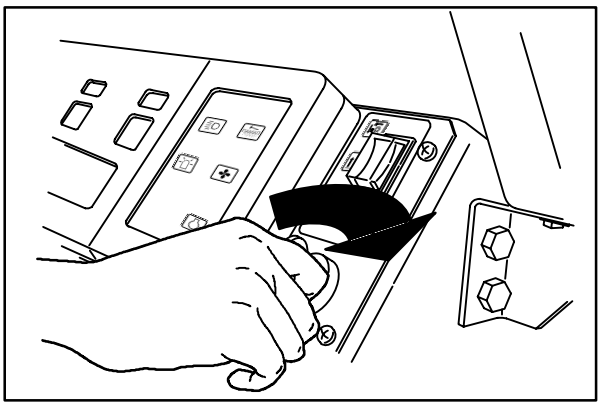

08460

2. Raise the hopper slightly to release the hopper support bar.

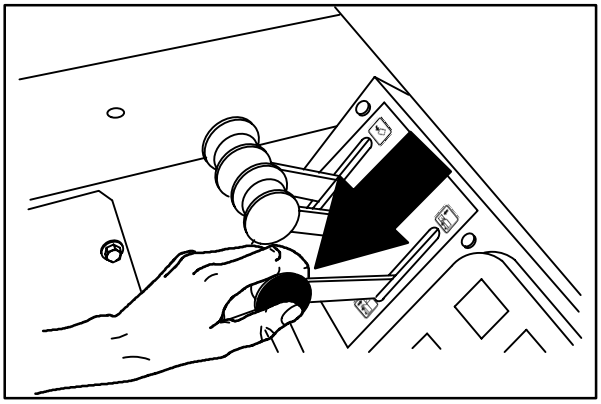

08480

3. Put the hopper support bar in the storage clip.

WARNING: Lift arm pinch point. Stay clear of hopper lift arms.

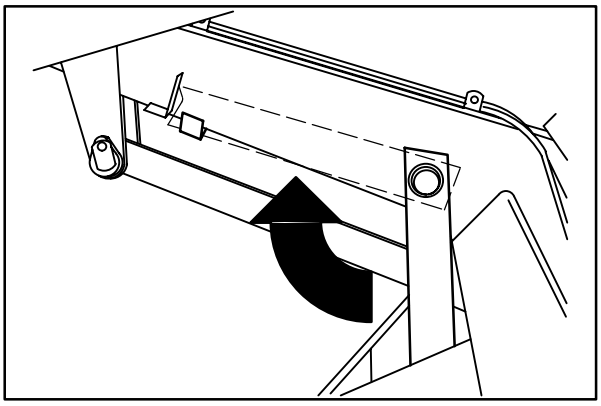

08590

4. Lower the hopper.

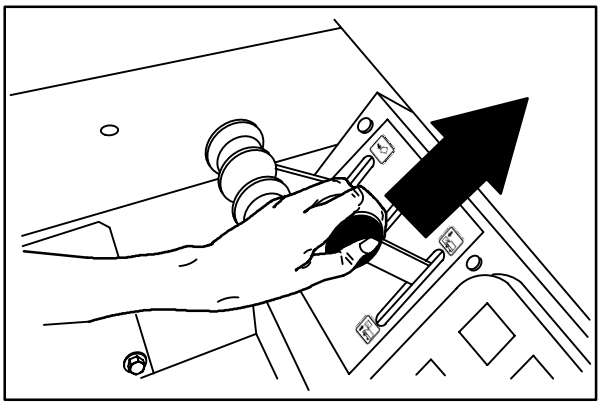

08482

5. Shut the engine off.

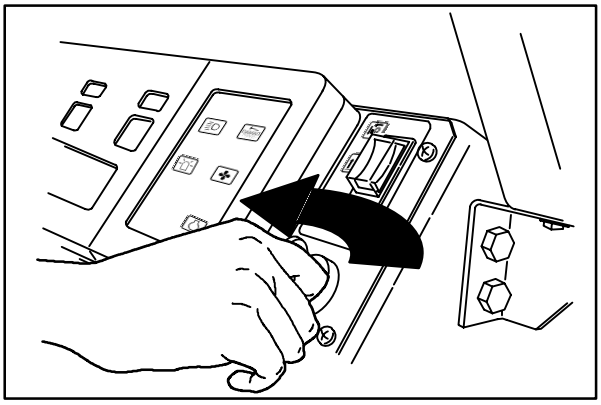

08461

OPERATION ON INCLINES

Drive the machine slowly on inclines. Use the brake pedal to control machine speed on descending inclines.

The maximum rated incline is 8.5°.

FOR SAFETY: When using machine, move machine with care when hopper is raised.

MACHINE TIE–DOWNS

The machine must be tied down on the main frame. Always set the machine parking brake and block the tires before tying down the machine.

FOR SAFETY: Before leaving or servicing machine, stop on level surface, set parking brake, turn off machine and remove key. Block machine tires.

The two front tie–down locations are through the U–bolt section of the main frame in front of the wheels.

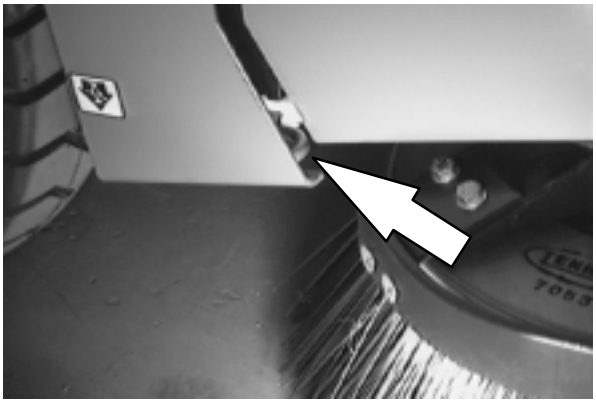

The two rear tie–down locations are through the U–bolt section of the main frame under the side bumpers toward the rear.

OPTIONS

VACUUM WAND

The vacuum wand uses the machine's vacuum system. The vacuum hose and wand allow pick-up of debris that is out of reach of the machine.

1. Stop the machine within reach of the area to be vacuumed and set the machine parking brake.

2. Turn off the vacuum fan by pressing the vacuum fan switch . The indicator light above the switch will go off.

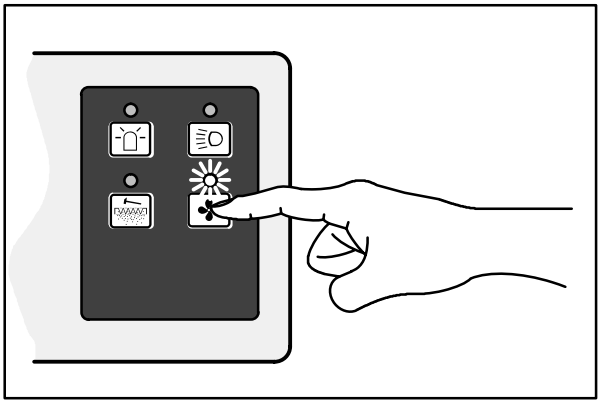

08231

3. Turn off and lift the main brush by placing the switch in the middle **Off** position.

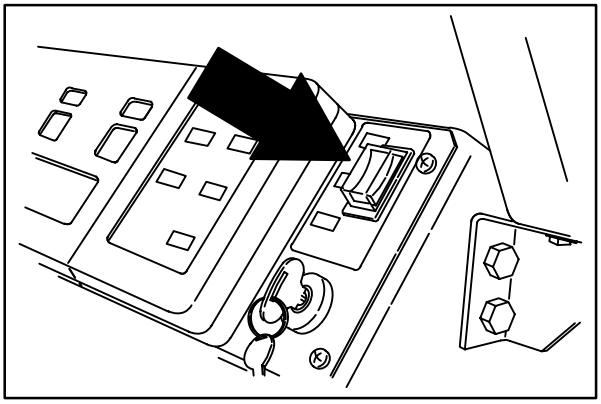

08464

4. Turn off and lift the side brush(es) by placing the bottom of the switch(es) into the **Off/Up** position.

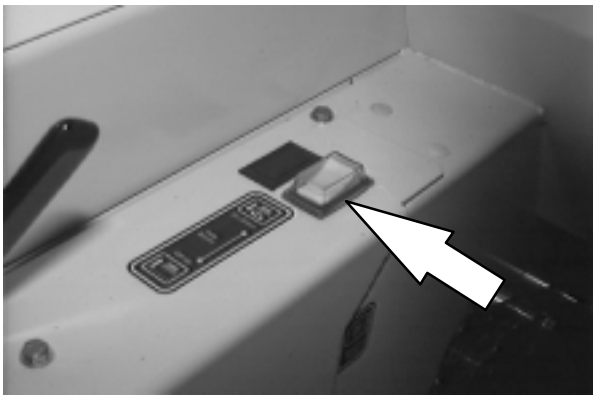

5. Open the forward hopper access door and engage the lift arm.

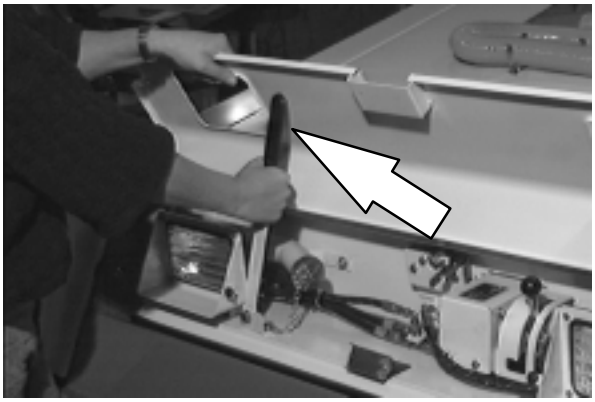

6. Remove the vacuum plug from the vacuum adaptor tube in front of the hopper.

7. Remove the vacuum wand and hose from the mounting clips and assemble them together.

8. Connect the vacuum hose to the vacuum adaptor tube in front of the hopper.

9. Close the vacuum door by sliding the vacuum door lever down and to the left into the locked position.

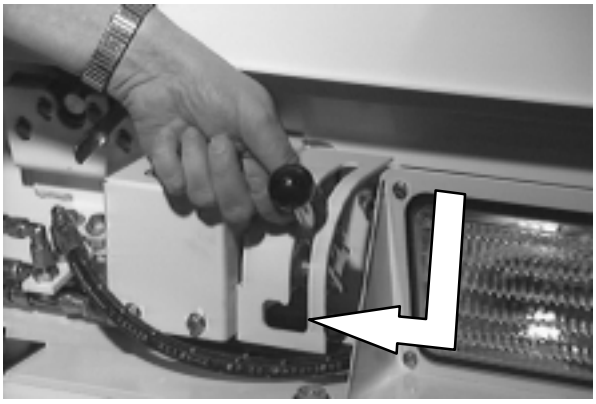

10. Turn on the vacuum fan by pressing the vacuum fan switch . The indicator light above the switch will go on.

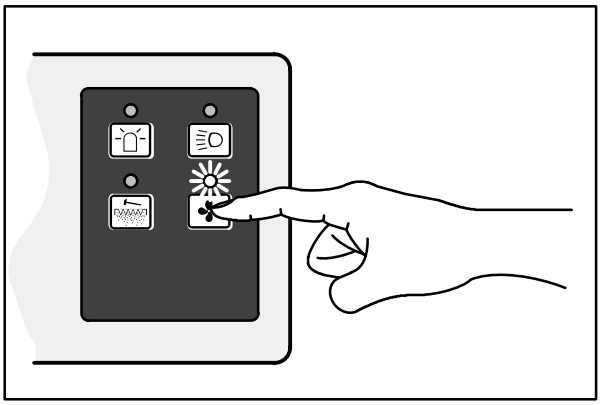

08231

11. Vacuum the area as needed.

12. When done vacuuming, turn off the vacuum fan by pressing the vacuum fan switch . The indicator light above the switch will go off.

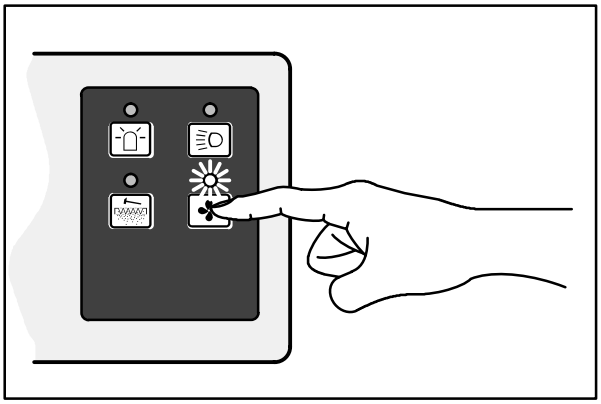

08231

13. Open the vacuum door by sliding the vacuum door lever to the right and up from the locked position.

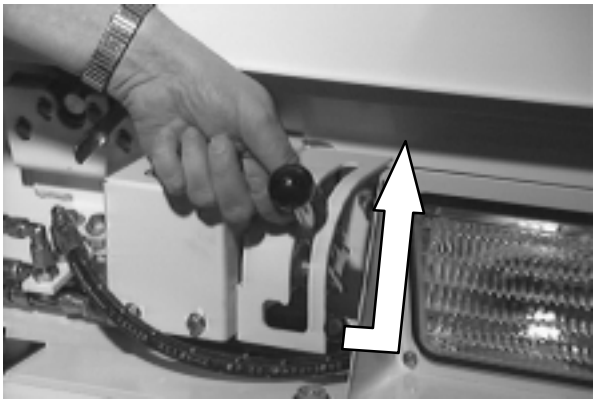

14. Disconnect the vacuum hose from the vacuum adaptor tube in front of the hopper.

15. Disassemble the vacuum hose assembly and place back onto the hopper in the mounting clips.

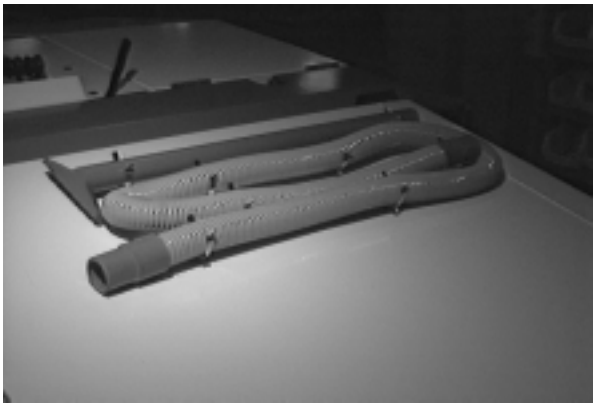

16. Replace the vacuum plug into the vacuum adaptor tube in front of the hopper, disengage the lift arm and close the forward hopper access door.

BLOWER WAND

The blower wand uses the machine's vacuum exhaust. The blower wand allows the operator to blow debris out from areas while sweeping with the machine.

1. Remove the blower attachment from the back of the machine.

2. Move the blower wand lever on the lintle to the left into the **ON** position to start airflow through the wand.

3. Direct the wand into the area of debris and blow as needed.

The operator can rest the wand on the side bracket.

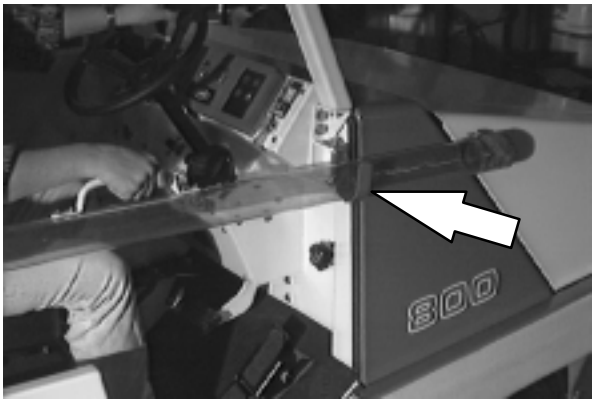

The operator can also add the extension onto the end of the blower wand for extended reach.

4. Move the blower wand lever on the lintle to the right into the **OFF** position to stop airflow through the wand.

5. Place the blower attachment on the back of the machine when finished.

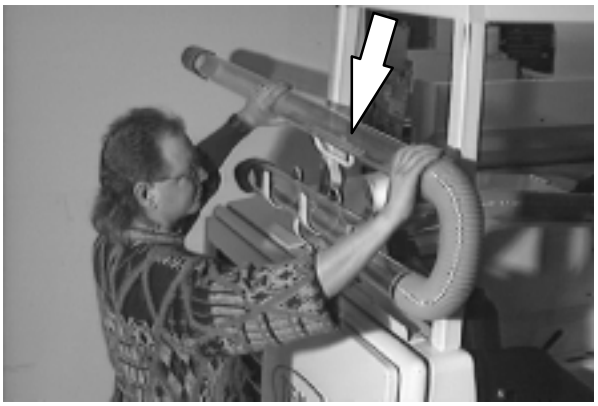

REGENERATIVE FILTER SYSTEM (RFS)

The Regenerative Filter System (RFS) is an option that alternately turns on the filter shaker motors when the filters need cleaning because of a build–up of dust or debris.

Normally the RFS does not require the operator to stop the machine to shake the filters during sweeping operation (except in extreme and severe dust environments). However, it is recommended that the filters are shaken at the operator's initiative each time the hopper is dumped. This can be accomplished during transit to a dump sight. *AVOID* shaking the filters while hopper is in a rolled out position. To initiate a shaking cycle, press the filter button on the instrument panel. See *FILTER SHAKER SWITCH.*

In very severe dust environments, the plugged filter indicator on the instrument panel may remain lit. When this occurs, it is recommended that the operator stop the machine and initiate one or two shake cycles to clear a possible plugged filter condition. After shaking, roll the hopper out to evacuate the dust tray. Resume sweeping operation.

If the hopper is over full, the light may come on. Check the hopper load and dump if necessary.

If the filter light remains on after all the above conditions are corrected, the filters may be plugged or the RFS may be inoperative. Filters may be shaken by the operator initiative by pressing the filter button on the instrument panel if there is a failure in the RFS control system.

Successful operation of the RFS option requires clean, undamaged filters. Plugged filters may cause the RFS to cycle continuously even at start up. The option also requires good sealing of the upper lid to the hopper, as well as a good seal between the two upper filter chambers.

It is recommended that the machine be driven for some test sweeping with the RFS option at initial start up. This next step assumes the hopper cover and upper filter chamber of the hopper was cleaned thoroughly prior to installation of the RFS option. Sweep for 30 minutes and open the hopper cover to check the integrity of the seals. Look at the top of the shaker panels and the underside of the hopper cover. Check for any signs of *dust tracking* that may be caused by a bad seal or filter. Repair a necessary. Perform this check periodically while using the sweeper with the RFS option.

MACHINE TROUBLESHOOTING

Problem	Cause	Remedy
Excessive dusting	Brush skirts and dust seals worn, damaged, out of adjustment	Replace or adjust brush skirts or dust seals
	Hopper dust filter clogged	Shake and/or clean or replace dust filter
	Main brush operating in **II Speed**™	Operate main brush in **Normal** speed
	Vacuum hose damaged	Replace vacuum hose
	Vacuum fan seal (vacuum fan inlet bracket) damaged	Replace seal
	Vacuum fan failure	Contact TENNANT service personnel
	Hopper door partially or completely closed	Open the hopper door
	Thermo Sentry™ tripped	Reset Thermo Sentry™
	Fabric presceen missing on dust filters	Clean filter elements and install fabric prescreen
Poor sweeping performance	Brush bristles worn	Replace brushes
	Main and side brushes not adjusted properly	Adjust main and side brushes
	Debris caught in main brush drive mechanism	Free drive mechanism of debris
	Main brush drive failure	Contact TENNANT service personnel
	Side brush drive failure	Contact TENNANT service personnel
	Hopper full	Empty hopper
	Hopper floor skirts worn or damaged	Replace floor skirts
	Hopper door partially or completely open	Close the hopper door
	Wrong sweeping brush	Contact TENNANT representative for recommendations

MAINTENANCE

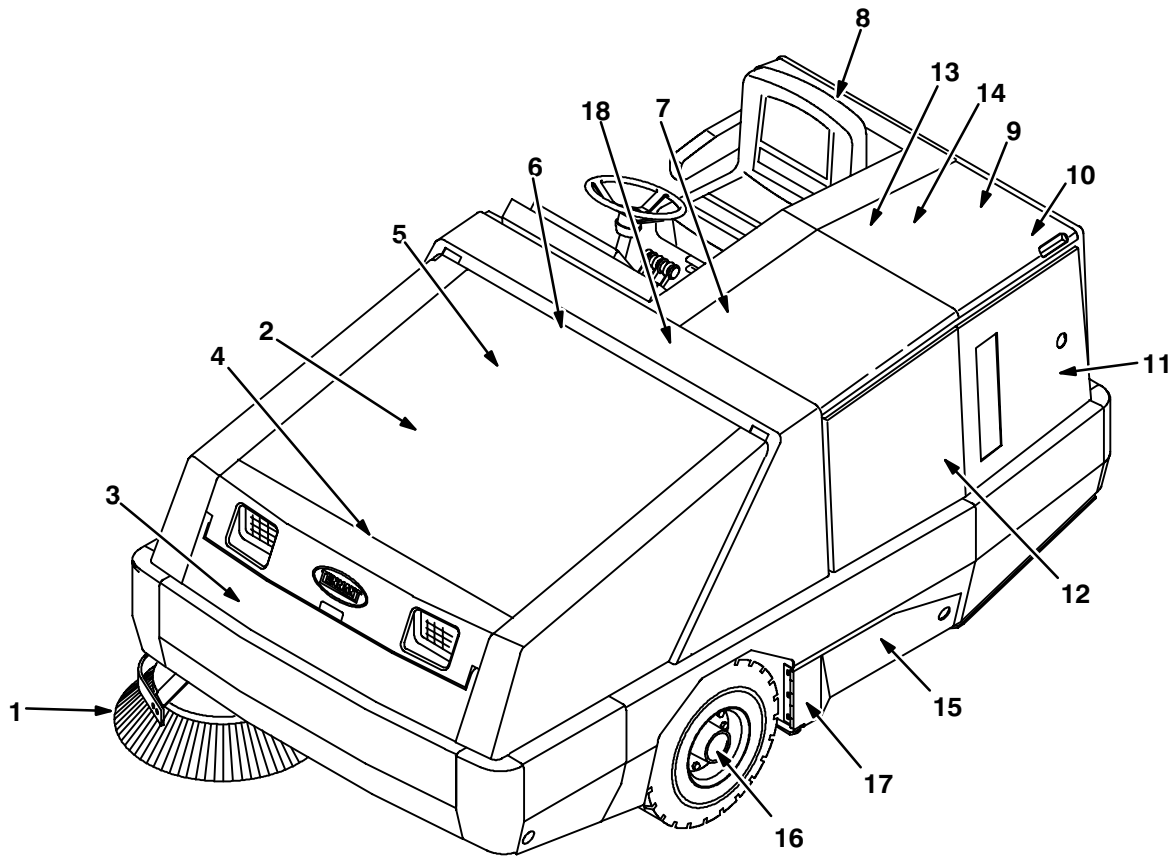

07623

MAINTENANCE CHART

Interval	Key	Description	Procedure	Lubricant/ Fluid	No. of Service Points
Daily	12	Engine air filter	Check indicator	–	1
			Empty dust cap	–	1
	9	Engine crankcase	Check oil level	EO	1
	15	Brush compartment skirts	Check for damage, wear and adjustment	–	6
	17	Hopper lip skirts	Check for damage, wear and adjustment	–	3
	15	Main brush	Check for damage, wear, and adjustment	–	1
			Check brush pattern	–	1
	1	Side brush	Check for damage, wear, and adjustment	–	1
			Check brush pattern	–	1
	2	Hopper dust filter	Shake	–	2

Interval	Key	Description	Procedure	Lubricant/ Fluid	No. of Service Points
50 Hours	15	Main brush	Rotate end-for-end	–	1
	2	Hopper dust filter	Check or clean	–	2
	12	Fuel lines	Check for wear and leaks	–	1
	18	Main brush adjustment	Lubricate	SPL	1
100 Hours	8	Hydraulic fluid reservoir	Check fluid level	HYDO	1
	10	Hydraulic fluid cooler	Clean cooler fins	–	1
	9	Radiator	Clean core exterior	–	1
			Check coolant level	WG	1
			Clean screen	–	1
		Tires	Check pressure	–	3
	15	Main brush and hopper seals	Check for damage or wear	–	12
	12	Engine crankcase	■ Change oil and filter element	EO	1
	12	Engine fan belt	■ Check tension	–	1
200 Hours	12	Engine	Steam clean exterior	–	1
	9	Radiator hoses and clamps	Check for tightness and wear	–	2
	14	Rear wheel support bearings	Lubricate	SPL	1
	7	Parking brake	Check adjustment	–	1
	3	Side brush pivot	Lubricate	SPL	1
400 Hours	12	Fuel filter, Engine	Replace	–	1
	12	Water separator/fuel filter	Replace	–	1
	9	Cooling system	Flush	WG	1
	5	Brake master cylinder	Check fluid level	BF	1
800 Hours	8	Hydraulic reservoir	Replace filler cap	–	1
			Replace suction strainer	–	1
			Change hydraulic fluid	HYDO	1
	11	Hydraulic fluid filter	■ Change filter element	–	1
		Hydraulic hoses	Check for wear and damage	–	45
	14	Propelling motor	■ Torque shaft nut	–	1
	14	Rear wheel	■ Torque wheel nuts	–	1
	13	Battery	■ Clean and tighten battery cable connections	–	1
1600 Hours	16	Front wheel bearings	Check, lubricate, and adjust	SPL	2

LUBRICANT/FLUID

BF . . . . Brake fluid
EO . . . . Engine oil, SAE–CC/CD rated
HYDO . Tennant Company or approved hydraulic fluid
SPL . . . Special lubricant, Lubriplate EMB grease (TENNANT part no. 01433–1)
WG . . . Water and permanent-type ethylene glycol anti-freeze, –34° C (–30° F)

NOTE: Also check procedures indicted (■) after the first 50-hours of operation.

LUBRICATION

ENGINE

Check the engine oil level daily. Change the engine oil and oil filter after the first 50 hours of machine operation, and then every 100 hours of operation. Use 10W30 SAE–CC/CD rated engine oil.

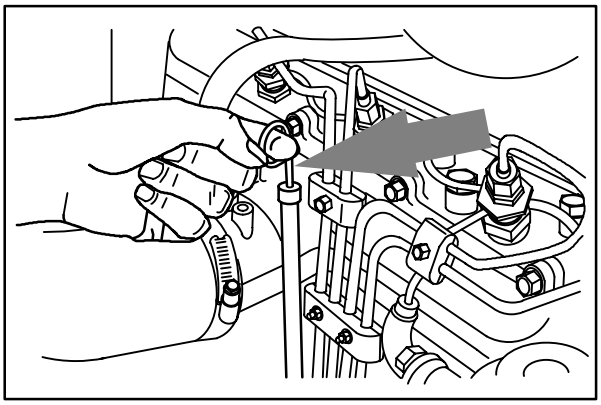

08431

For machines below serial number , the engine oil drain is located on the left side of the machine inside the main brush compartment. For machines serial number and above, the engine oil drain is located on the engine oil pan. Drain the engine oil when it is warm.

Fill the engine with oil to the level indicated on the oil dipstick. The engine oil capacity is 6 L (6.3 qt) including the oil filter.

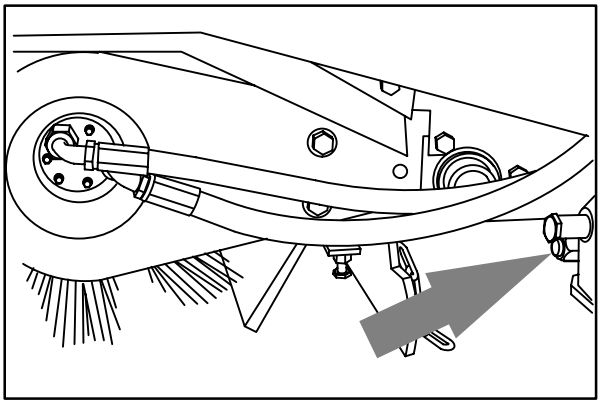

08448

REAR WHEEL SUPPORT

The rear wheel support pivots the rear wheel. The support has one grease fitting for the bearings. The rear wheel support bearings must be lubricated every 200 hours of operation. Use Lubriplate EMB grease (TENNANT part no. 01433–1).

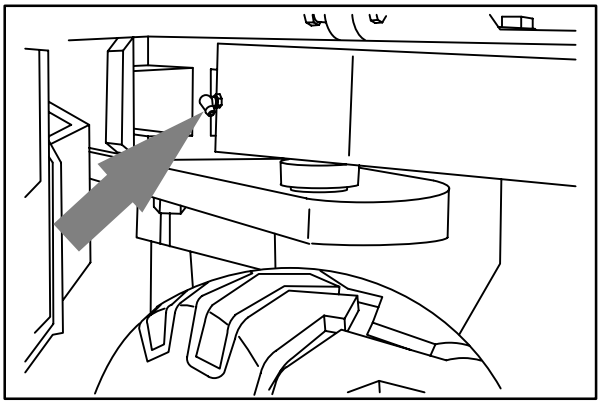

08451

FRONT WHEEL BEARINGS

Inspect the front wheel bearings for seal damage, and repack and adjust every 1600 hours of operation. Use Lubriplate EMB grease (TENNANT part no. 01433–1).

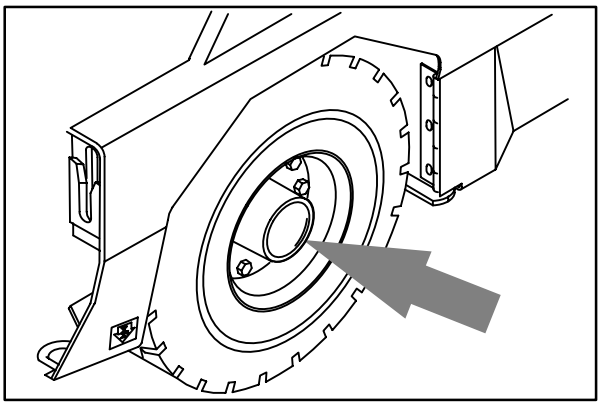

08579

SIDE BRUSH PIVOT PINS

The side brush pivot pins should be lubricated with Lubriplate EMB grease (TENNANT part no. 01433–1) every 200 hours of operation.

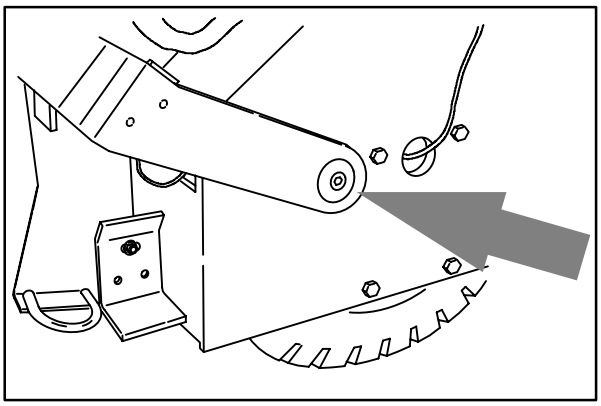

08581

MAIN BRUSH ADJUSTMENT

The main brush adjustment, located on the right side of the main brush, has one grease fitting for lubrication. Lubricate the main brush adjustment every 50 hours of operation with Lubriplate EMB grease (TENNANT part no. 01433–1).

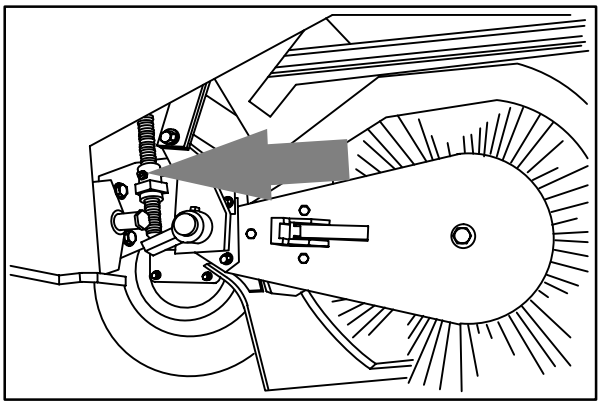

08934

HYDRAULICS

HYDRAULIC FLUID RESERVOIR

The reservoir is located behind the operator seat.

Mounted on top of the reservoir is a filler cap with a built-in breather. Replace the cap every 800 hours of operation.

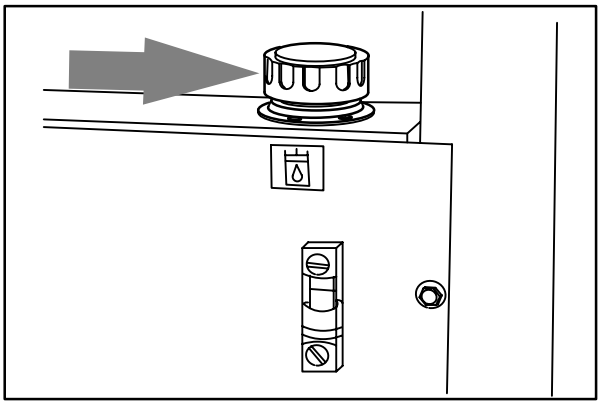

08452

Check the hydraulic fluid level at operating temperature every 100 hours of operation. Make sure the hopper is down when checking hydraulic fluid level. The sight gauge is marked with full, the black line, and add, the red line, levels to indicate the level of hydraulic fluid in the reservoir.

Lubricate the filler cap gasket with a film of hydraulic fluid before putting the cap back on the reservoir.

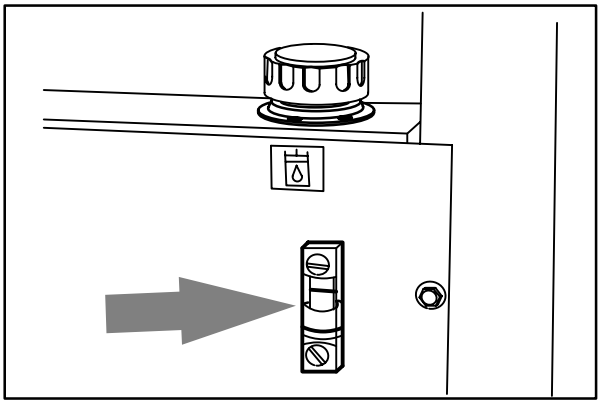

08430

ATTENTION! Do not overfill the hydraulic fluid reservoir or operate the machine with a low level of hydraulic fluid in the reservoir. Damage to the machine hydraulic system may result.

Drain and refill the hydraulic fluid reservoir with new hydraulic fluid every 800 hours of operation.

The hydraulic fluid filter is located in the engine compartment.

Replace the filter element every 800 hours of operation.

The reservoir has a built-in strainer outlet that filters hydraulic fluid before it enters the system. Replace the strainer every 800 hours of operation.

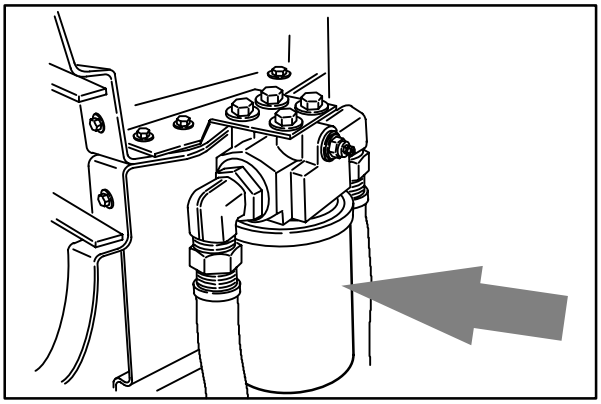

08453

HYDRAULIC FLUID

The quality and condition of the hydraulic fluid play a very important role in how well the machine operates. TENNANT's hydraulic fluid is specially selected to meet the needs of TENNANT machines.

TENNANT's hydraulic fluids provide a longer life for the hydraulic components. There are two fluids available for different temperature ranges:

TENNANT part no.	Ambient Temperature
65869	above 7° C (45° F)
65870	below 7° C (45° F)

The higher temperature fluid has a higher viscosity and should not be used at the lower temperatures. Damage to the hydraulic pumps may occur because of improper lubrication.

The lower temperature fluid is a thinner fluid for colder temperatures.

If a locally-available hydraulic fluid is used, make sure the specifications match TENNANT hydraulic fluid specifications. Using substitute fluids can cause premature failure of hydraulic components.

European marketed machines are filled with locally available hydraulic fluids. Check the label on the hydraulic fluid reservoir.

ATTENTION! Hydraulic components depend on system hydraulic fluid for internal lubrication. Malfunctions, accelerated wear, and damage will result if dirt or other contaminants enter the hydraulic system.

HYDRAULIC HOSES

Check the hydraulic hoses every 800 hours of operation for wear or damage.

Fluid escaping at high pressure from a very small hole can be almost invisible, and can cause serious injuries.

See a doctor at once if injury results from escaping hydraulic fluid. Serious infection or reaction can develop if proper medical treatment is not given immediately.

FOR SAFETY: When servicing machine, use cardboard to locate leaking hydraulic fluid under pressure.

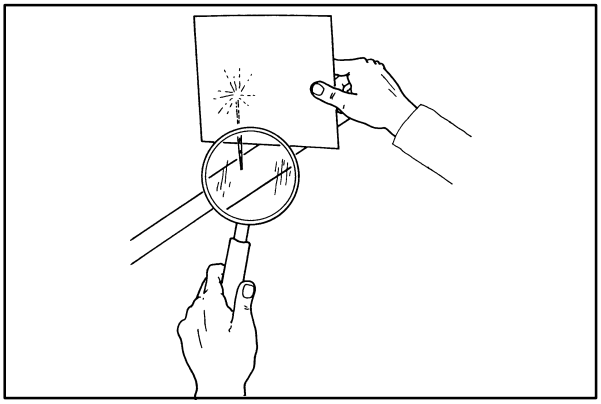

00002

If you discover a fluid leak, contact your mechanic/supervisor.

PROPELLING MOTOR

Torque the shaft nut to 237 Nm (175 ft lb) plus enough torque to align the slotted nut and the shaft hole after the first 50-hours of operation, and every 800 hours there after.

ENGINE

COOLING SYSTEM

Check the radiator coolant every 100 hours of operation. Use clean water mixed with a permanent-type, ethylene glycol antifreeze to a –34° C (–30° F) rating. The coolant level should be 25 to 50 mm (1 to 2 in) below the filler opening.

FOR SAFETY: When servicing machine, avoid contact with hot engine coolant.

ATTENTION! Never pour cold water or cold antifreeze into the radiator of an overheated engine. Allow the engine to cool down to avoid cracking the cylinder head or block. Keep the engine running while adding water.

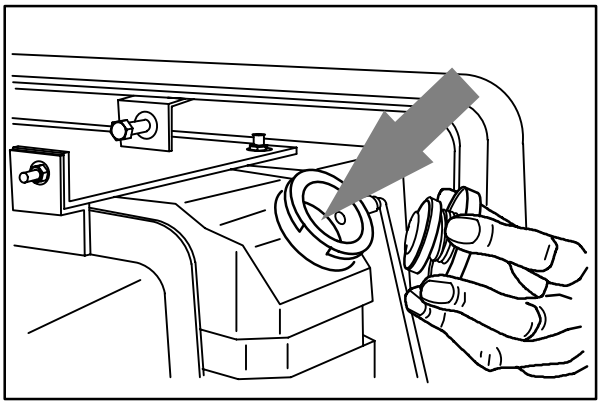

08432

Clean the radiator screen every 100 hours of operation.

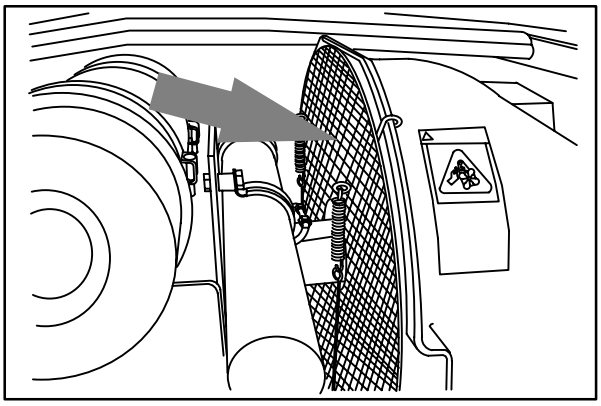

08582

Check the radiator hoses and clamps every 200 hours of operation. Tighten the clamps if they are loose. Replace the hoses and clamps if the hoses are cracked, harden, or swollen.

Check the radiator core exterior and hydraulic cooler fins for debris every 100 hours of operation. Blow or rinse all dust, which may have collected on the radiator, in through the grille and radiator fins, opposite the direction of normal air flow. The grille and hydraulic cooler open for easier cleaning. Be careful not to bend the cooling fins when cleaning. Clean thoroughly to prevent the fins becoming encrusted with dust. Clean the radiator and cooler only after the radiator has cooled to avoid cracking.

FOR SAFETY: When servicing machine, wear eye and ear protection when using pressurized air or water.

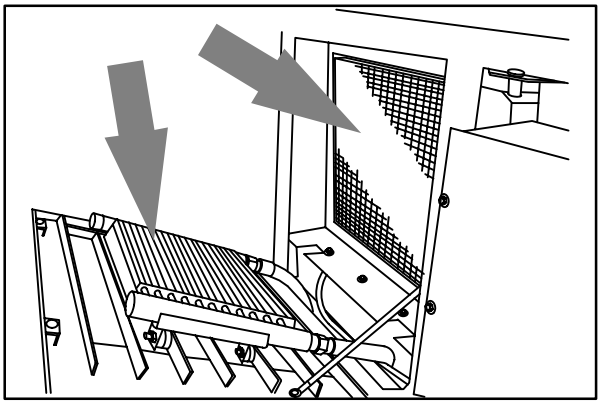

08454

Flush the radiator and the cooling system every 400 hours of operation, using a dependable cleaning compound.

AIR FILTER INDICATOR

The air filter indicator shows when to clean or replace the air filter element. Check the indicator daily. The indicator's red line will move as the air filter element fills with dirt. Do not clean or replace the air filter element until the red line reaches 5 kPa (20 in H_2O) and the "SERVICE WHEN RED" window is filled with red. The indicator's red line may return to a lower reading on the scale when the engine shuts off. The red line will return to a correct reading after the engine runs for a while.

Reset the air filter indicator by pushing the reset button on the end of the indicator after cleaning or replacing the air filter element.

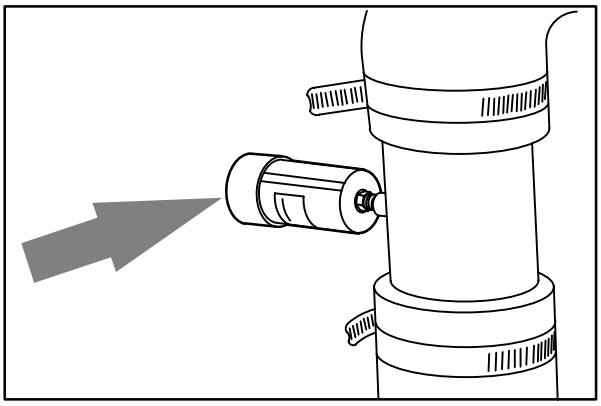

08447

AIR FILTER

The engine air filter housing has a dust cap and a dry cartridge-type air filter element. Empty the dust cap daily. The air filter must be replaced whenever the filter element is damaged or has been cleaned three times.

Machines with the heavy duty SE air filter option have a safety element. It is inside the standard element. Replace this element, do not clean it, after the regular element has been damaged or cleaned three times.

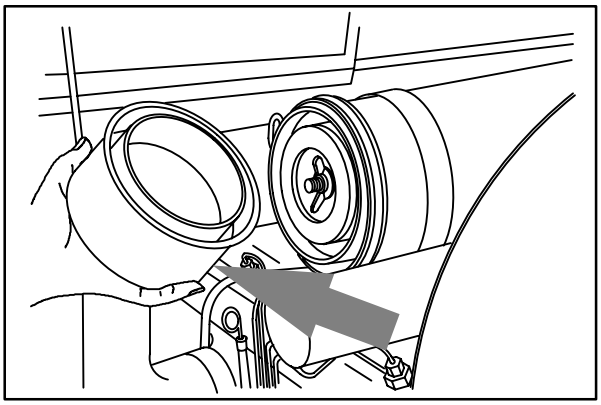

08455

Install the dust cap on the air filter housing with the arrows pointing up.

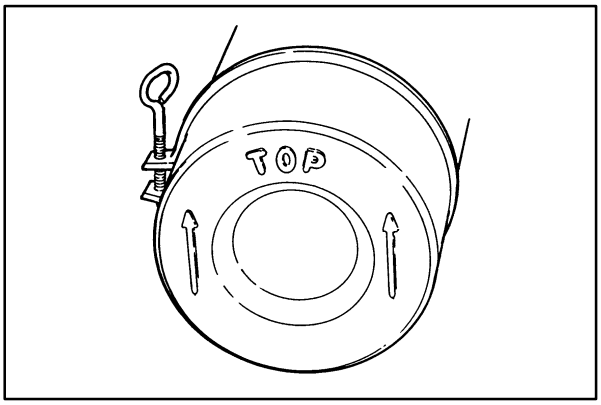

02492

Service the air filter element only when the air filter indicator shows restriction in the air intake system. Do not remove the air filter element from the housing unless it is restricting air flow.

Using an air hose, direct clean dry air, maximum 205 kPa (30 psi), up and down the pleats on the inside of the element. Do not rap, tap or pound dust out of the element.

FOR SAFETY: When servicing machine, wear eye and ear protection when using pressurized air or water.

After cleaning the air filter element, inspect it for damage by placing a bright light inside. The slightest rupture requires replacement of the element. Inspect the seals on the ends of the element, they should be flexible and undamaged.

WATER SEPARATOR/FUEL FILTER

The water separator/fuel filter filters impurities from the fuel and seperates any water from the fuel system. It is located on the left side of the engine compartment. Water can be drained from the drain cock at the bottom as needed.

Replace the water separator/fuel filter element every 400 hours of operation.

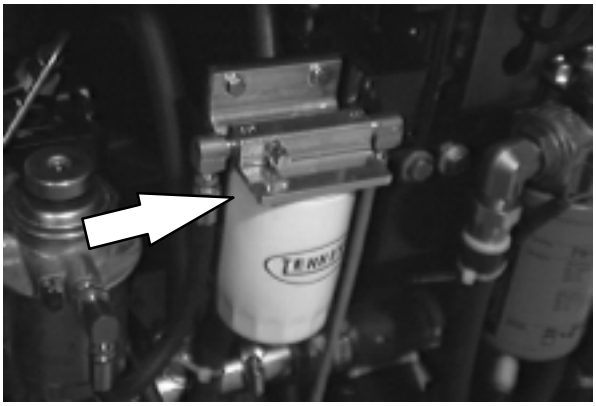

ENGINE FUEL FILTER

The engine fuel filter filters impurities from the fuel. It is located on the left side of the engine.

Replace the engine fuel filter element every 400 hours of operation.

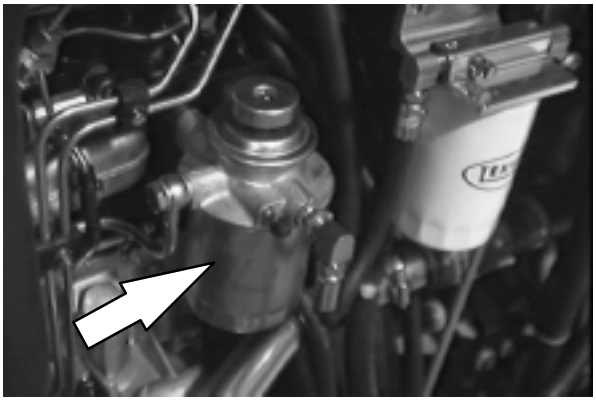

FUEL LINES

Check the fuel lines for wear and leaks every 50 hours of operation.

For older style fuel lines made of rubber, the fuel lines become worn out whether the engine has been used much or not. Replace the fuel lines every two years. If the fuel lines are found worn or damaged before two years' time, replace or repair them at once.

Bleed the fuel system after replacement of any of the fuel lines, see *TO PRIME THE FUEL SYSTEM*. When the fuel lines are not installed, plug both ends with clean cloth or paper to prevent dirt from entering the lines. Dirt in the lines can cause fuel injection pump malfunction.

PRIMING FUEL SYSTEM

Priming the fuel system removes pockets of air in the fuel lines and fuel components. Air in the fuel system will prevent smooth engine operation.

Prime the fuel system after running out of fuel, disconnecting the low pressure fuel lines, or any part of the low pressure fuel system leaks during engine operation.

TO PRIME FUEL SYSTEM

1. Stop the engine and set the machine parking brake.

FOR SAFETY: Before leaving or servicing machine; stop on level surface, set parking brake, and turn off machine.

2. Fill the fuel tank.

3. Open the side and top engine access doors.

4. Loosen the vent screw on the top of the fuel filter.

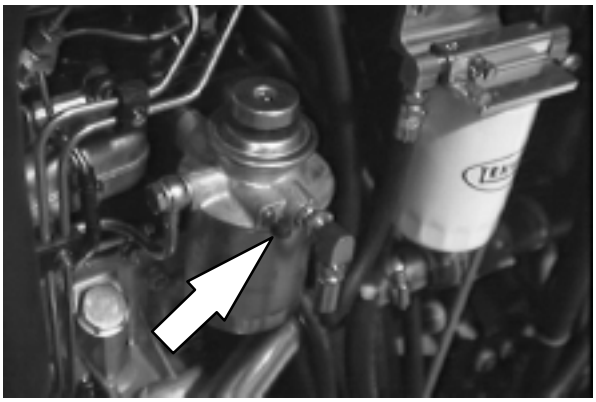

5. Turn the ignition switch on.

6. Manually operate the priming pump on the top of the fuel filter until fuel, free from air, comes from the filter vent point.

FOR SAFETY: When servicing machine, keep flames and sparks away from fuel system service area. Keep area well ventilated.

7. While holding down the priming pump, tighten the filter vent screw.

8. Loosen the return connection of the fuel injection pump.

9. Operate the the priming pump until fuel, free from air, comes from the injection pump vent point.

10. While holding down the priming pump, tighten the return connection to the injection pump.

11. Loosen all four of the high pressure fuel line connections at the atomizers.

ATTENTION! The engine may start running spontaneously if all four of the fuel line connections are not loosened.

12. Operate the starter motor until fuel, free from air, comes from the line connections.

*NOTE: Operating the throttle in the **Fast** position will increase the fuel flow speedup the bleeding process. After bleeding is finished, return the throttle to **Idle**.*

13. Tighten the high pressure fuel line connections. The engine is now ready to start.

14. Close the access doors.

NOTE: If the engine runs correctly for a short time and then stops, or runs roughly, check for air in the fuel system. If there is air in the system, there is probably leakage in the low pressure system.

15. Turn the ignition switch off.

BATTERY

The battery for the machine is a low maintenance battery. Do not add water to the battery, or remove the battery vent plugs.

The battery is located under the hydraulic reservoir for machines below serial number 001212, and in the engine compartment for machines serial 001212 and above.

After the first 50 hours of operation, and every 800 hours after that, clean and tighten the battery connections.

BELTS AND CHAINS

ENGINE BELT

The engine fan belt is driven by the engine crankshaft pulley and drives the alternator pulley. Proper belt tension is 9 to 10 mm (0.35 to 0.39 in) for a new belt and 10 to 11 mm (0.39 to 0.43 in) for a used belt with a force of 10 kg (22 lb).

Check and adjust the belt tension every 100 hours of operation.

WARNING: Moving belt and fan. Keep away.

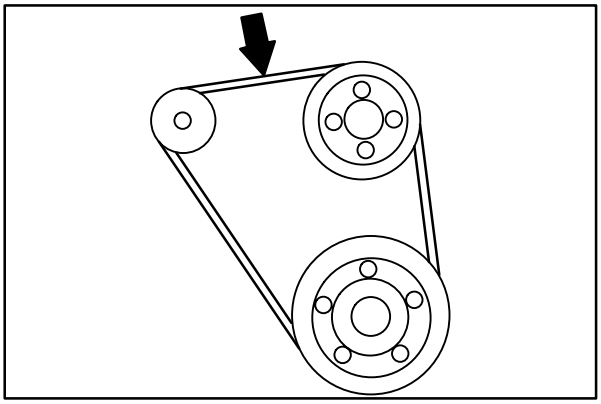

08486

STATIC DRAG CHAIN

A static drag chain prevents the buildup of static electricity in the machine. The chain is attached to the machine by a rear main brush skirt retaining bolt.

Make sure the chain is touching the floor at all times.

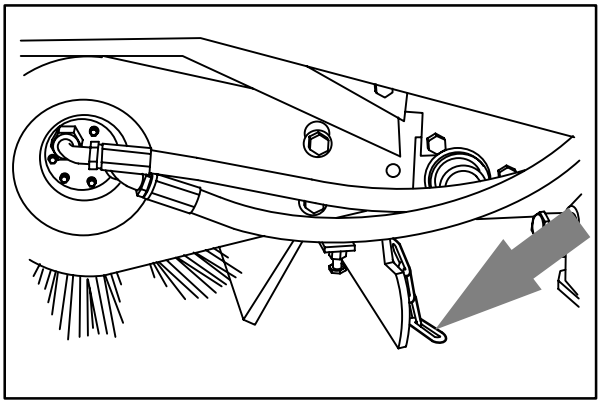

08449

DEBRIS HOPPER

HOPPER DUST FILTER

The dust filters filter the air pulled up from the hopper. The dust filters are equipped with a shaker to remove the accumulated dust particles. The dust filters shaker is operated by the filter shaker switch.

Shake the dust filters before dumping the hopper and at the end of every work shift. Avoid shaking the filters while the hopper is in a rolled out position. Check and clean the dust filters every 50 hours of operation. Extremely dusty conditions may require more frequent cleaning of dust filters.

To clean the dust filters, use one of the following methods:

- SHAKING – Press the filter shaker switch.
- AIR – Blow compressed air through the dust filter from the inside. This may be done with the dust filter in the machine, or for more efficient cleaning remove the dust filter from the machine and the prescreen wrap from the filter element. Always wear eye protection when using compressed air.

FOR SAFETY: When servicing machine, wear eye and ear protection when using pressurized air or water.

- WATER – Remove the fabric presceen wrap from the filter element. Wash the prescreen wrap in a water and mild detergent solution. Rinse the prescreen wrap until it is clean. Air dry the wet prescreen wrap; do not use compressed air. **NEVER** wash the filter element with water.

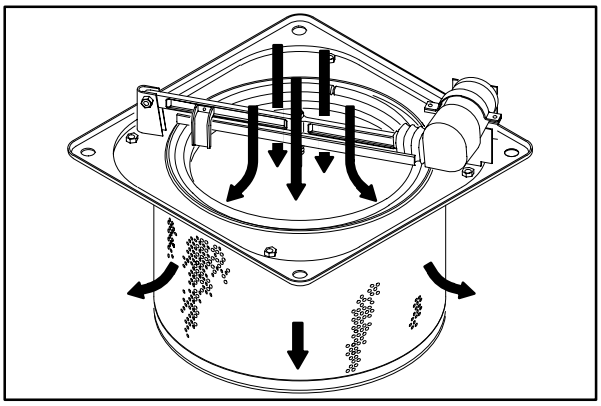

08594

TO REMOVE OR REPLACE HOPPER DUST FILTER

1. Stop the engine and set the machine parking brake.

FOR SAFETY: Before leaving or servicing machine; stop on level surface, set parking brake, turn off machine and remove key.

2. Open the hopper cover.
3. Disconnect the shaker motor wire connectors.

4. Remove the four retaining screws from the filter shaker frame.

5. Pull the filter shaker frame out of the hopper.

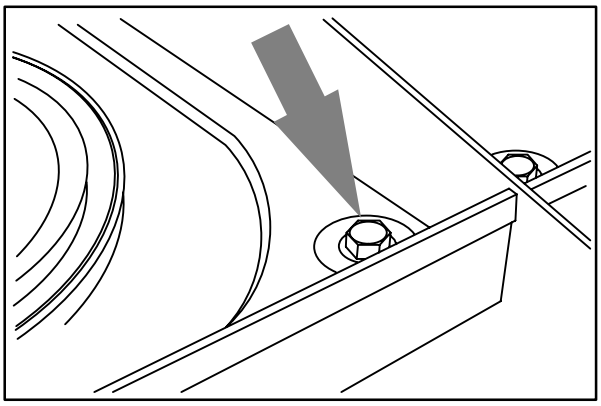

08591

6. Carefully turn over the shaker frame and element.

7. Remove the four filter retaining screws from the shaker frame.

8. Remove the retainer ring from the shaker frame. Remove the filter.

9. Make sure the prescreen wrap is tightly wrapped around and securely fastened on the new filter element. Put the new filter on the filter shaker frame.

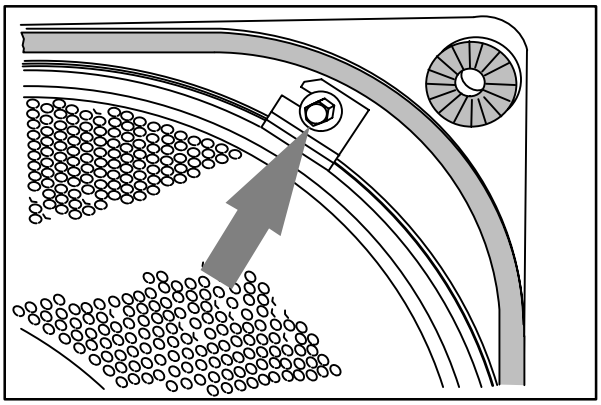

08592

10. Place the retainer ring over the filter. Make sure the retaining ring fits inside the lip of the filter element all the way around. Line up the slots on the retainer ring with the retaining screws holes.

11. Mount using the retaining screws.

12. Check the seal on the shaker frame for damage. Make sure the vibration isolators are mounted in all four corners of the filter shaker frame.

13. Put the filter and shaker frame in the hopper.

14. Install the four retaining screws and tighten.

15. Connect the shaker motor wire connectors.

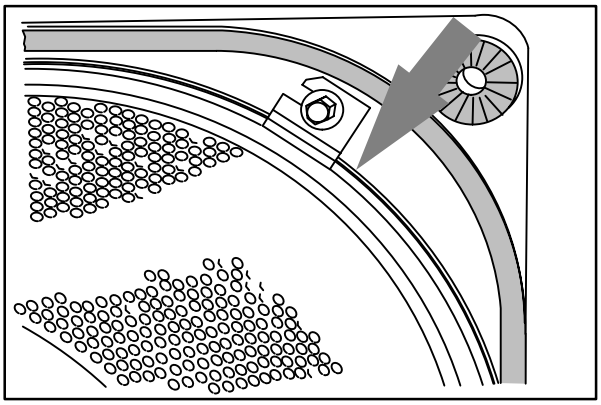

08593

THERMO SENTRY™

The Thermo Sentry™ senses the temperature of the air pulled up from the hopper. If there is a fire in the hopper, the Thermo Sentry™ stops the vacuum fan and cuts off the air flow. The Thermo Sentry™ is located on the vacuum fan housing.

Reset the Thermo Sentry™ by pushing in its reset button.

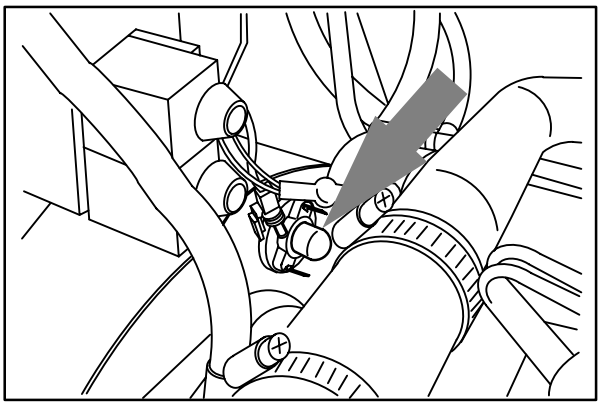

08928

BRUSHES

MAIN BRUSH

The main brush is cylindrical and spans the width of the machine, sweeping debris into the hopper.

Check the brush daily for wear or damage. Remove any string or wire tangled on the main brush, main brush drive hub, or main brush idler hub.

Check the main brush pattern daily. The pattern should be 50 to 65 mm (2 to 2.5 in) wide. Adjust the main brush pattern by turning the main brush pressure knob located next to the operator seat.

Rotate the main brush end-for-end every 50 hours of operation for maximum brush life and best sweeping performance.

Replace the main brush when the remaining bristles measure 30 mm (1.25 in) in length.

TO REPLACE MAIN BRUSH

1. Stop the engine and set the machine parking brake.

FOR SAFETY: Before leaving or servicing machine; stop on level surface, set parking brake, turn off machine and remove key.

2. Raise the main brush.

3. Open the right side main brush access door.

4. Unlatch and remove the brush idler plate.

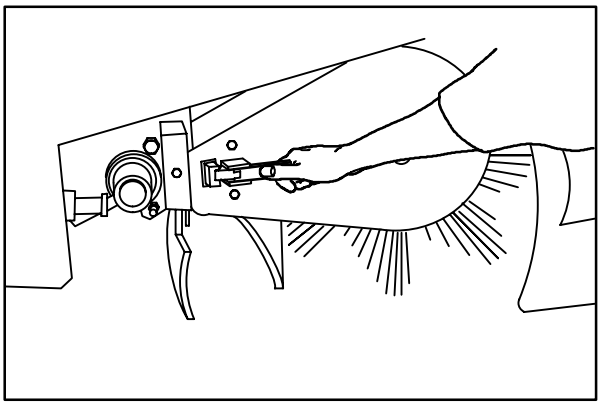

08487

5. Grasp the main brush; pull it off the brush drive plug and out of the main brush compartment.

6. Put the new or rotated end-for-end main brush on the floor next to the access door.

7. Slide the main brush onto the drive plug. Rotate the brush until it engages the drive plug, and push it all the way onto the plug.

8. Slide the main brush idler plate plug onto the main brush.

9. Latch the idler plate onto the machine frame.

10. Close the right side main brush access door.

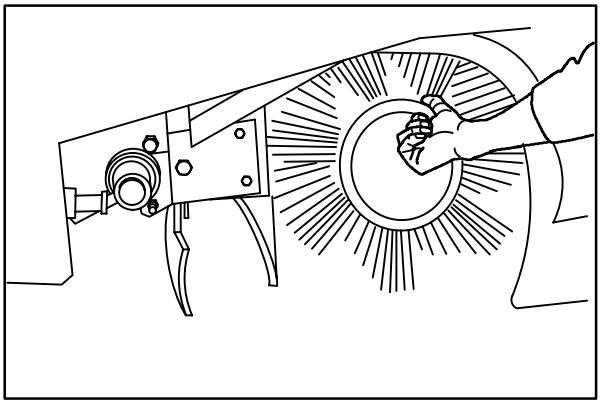

08488

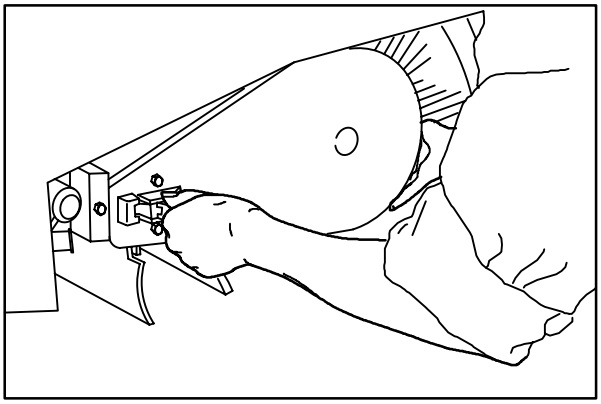

08489

TO CHECK AND ADJUST MAIN BRUSH PATTERN

1. Apply chalk, or some other material that will not blow away easily, to a smooth, level floor.

2. Raise the side brush and main brush and position the main brush over the chalked area.

3. Start the main brush.

4. Lower the main brush for 15 to 20 seconds while keeping a foot on the brakes to keep the machine from moving. This will lower the rotating main brush.

NOTE: If chalk or other material is not available, allow the brushes to spin on the floor for two minutes. A polish mark will remain on the floor.

5. Raise the main brush.

6. Stop the main brush.

7. Drive the machine off the test area.

8. Observe the width of the brush pattern. The proper brush pattern width is 65 to 75 mm (2.5 to 3.5 in).

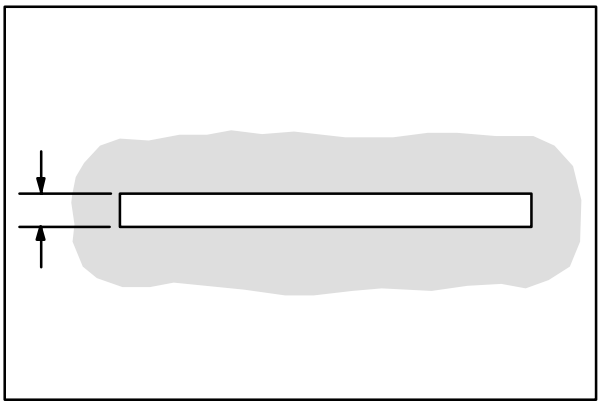

00582

9. To increase the width of the main brush pattern, turn the main brush down pressure knob counter-clockwise.

To decrease the width of the main brush pattern, turn the main brush down pressure knob clockwise.

If the main brush pattern is tapered, more than 15 mm (0.5 in) on one end than the other, adjust the taper at the drive end of the brush.

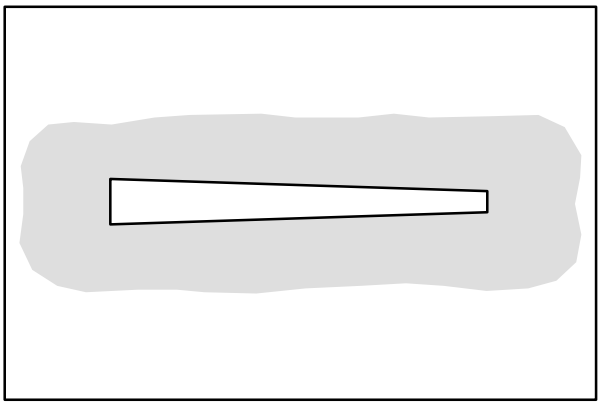

00601

A. Loosen the brush drive end plate mounting bolts.

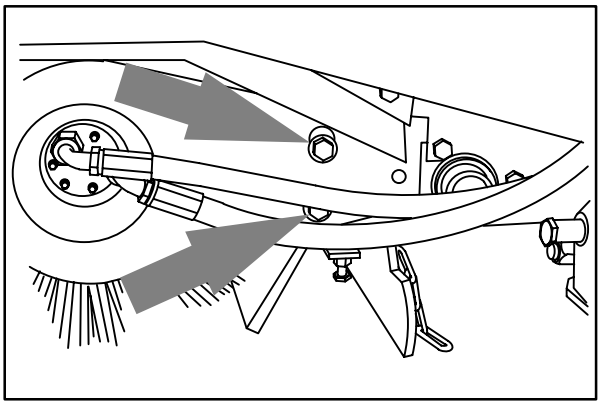

08450

B. Turn the taper adjustment nut counter-clockwise to increase the pattern width at the brush drive end, and clockwise to decrease the pattern width at the brush drive end. Tighten the drive end plate mounting bolts.

C. Check the main brush pattern and readjust as necessary. Then adjust the width of the main brush pattern.

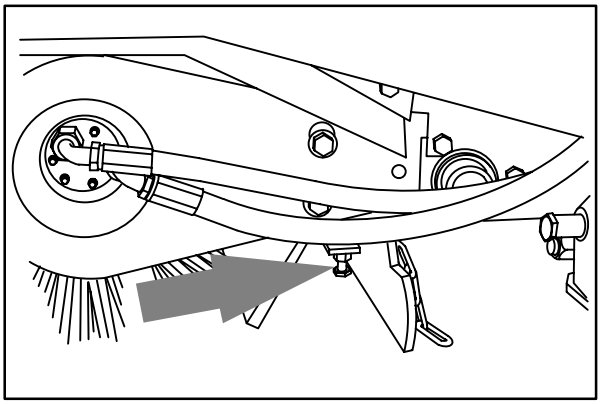

08490

SIDE BRUSH

The side brush sweeps debris along edges into the path of the main brush.

Check the brush daily for wear or damage. Remove any string or wire found tangled on the side brush or side brush drive hub.

Check the side brush pattern daily. One-half of the side brush bristles should contact the floor when the brush is in motion. Adjust the side brush pattern by the side brush down pressure knob. Turn the knob counter-clockwise to increase the brush contact with the sweeping surface, and clockwise to decrease the brush contact with the sweeping surface.

The side brush should be replaced when it no longer sweeps effectively for your application. A guideline length is when the remaining bristles measure 50 mm (2 in) in length. You may change the side brush sooner if you are sweeping light litter, or wear the bristles shorter if you are sweeping heavy debris.

TO REPLACE SIDE BRUSH

1. Empty the debris hopper.
2. Set the machine parking brake.
3. Raise the hopper.
4. Stop the engine.

FOR SAFETY: Before leaving or servicing machine; stop on level surface, set parking brake, turn off machine and remove key.

5. Remove the side brush retaining pin from the side brush drive shaft.
6. Slide the side brush off the side brush drive shaft.

NOTE: Remove the drive hub and put it on the new brush if one is not installed.

7. Slide the new side brush onto the side brush drive shaft.
8. Insert the side brush retaining pin through the side brush hub and shaft and secure.

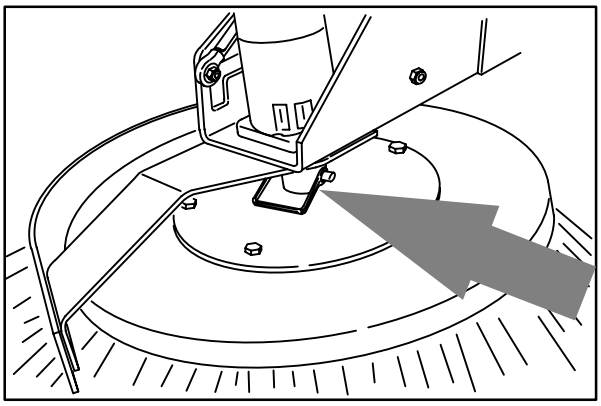

08466

9. Disengage the hopper support bar and lower the hopper.

10. Adjust the side brush pattern with the side brush down pressure knob.

SKIRTS AND SEALS

HOPPER LIP SKIRTS

The hopper lip skirts are located on the bottom rear of the hopper. The skirts float over debris and help deflect that debris into the hopper. The top skirt is segmented.

Check the hopper lip skirts for wear or damage daily.

Replace the hopper lip skirts when they no longer touch the floor.

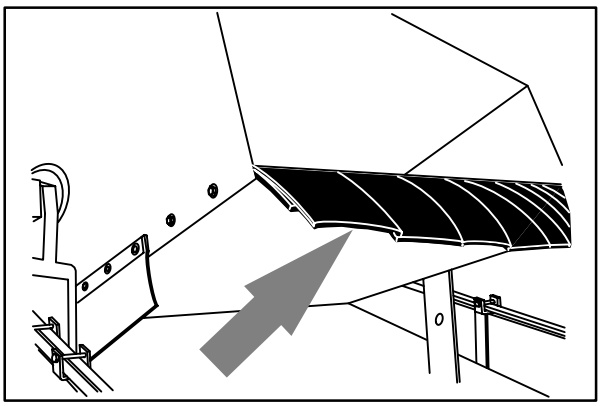

08491

BRUSH COMPARTMENT SKIRTS

The brush compartment skirts are located on the bottom of each of the two main brush doors and around the ends of the brush on the main frame. The inside brush door skirt should touch the floor, and the outside brush door skirt should clear the floor by 3 to 5 mm (0.12 to 0.25 in).

Check the skirts for wear or damage and adjustment daily.

NOTE: The brush door skirts have slotted holes to allow for a ground clearance adjustment. The door must be closed for proper adjustment.

NOTE: Tire pressure will affect skirt clearances.

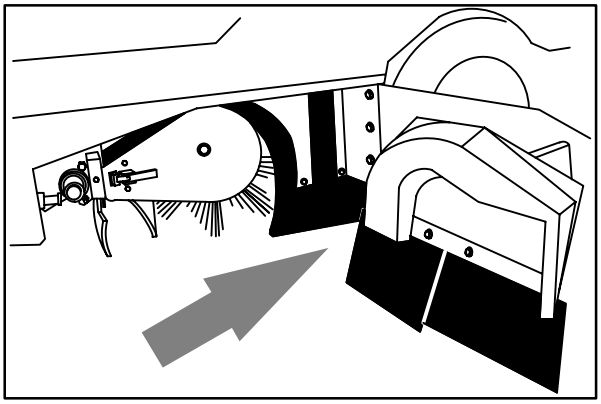

08493

REAR SKIRTS

The two rear skirts are located on the bottom rear of the main brush compartment. The vertical skirt should clear the floor up to 20 mm (0.75 in) in dusty conditions, and touch the floor otherwise. The recirculation skirt is self-adjusting.

Check the skirts for wear or damage and adjustment daily.

NOTE: Tire pressure will affect skirt clearances.

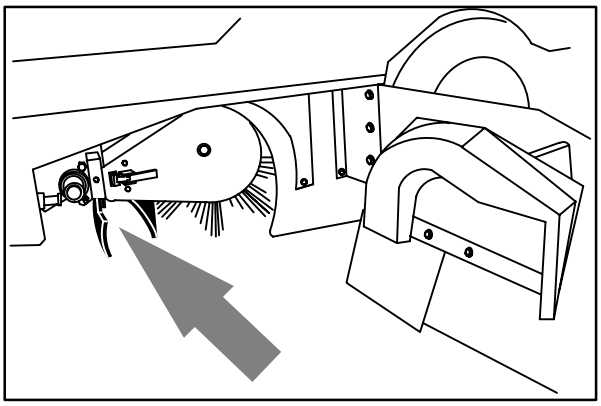

08494

BRUSH DOOR SEALS

The brush door seals are located on both main brush doors and on corresponding portions of the main frame.

Check the seals for wear or damage every 100 hours of operation.

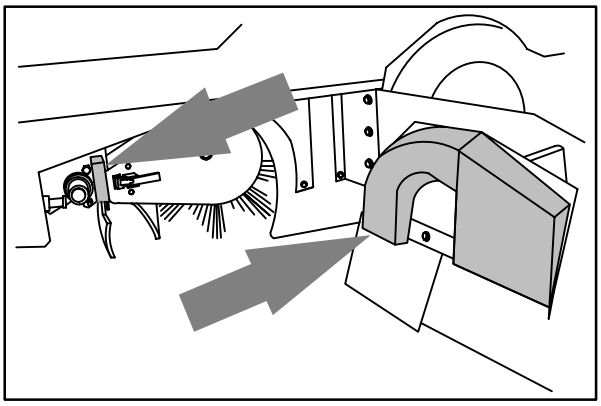

08495

HOPPER SEALS

The hopper seals are located on the top and side portions of the machine frame that contact the hopper.

Check the seals for wear or damage every 100 hours of operation.

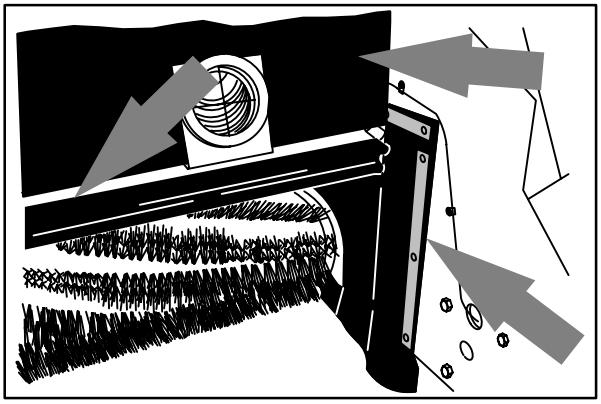

08496

HOPPER DOOR SEALS

The hopper door seals are located on the hopper door. They seal the hopper when the hopper door is closed.

Check the seals for wear or damage every 100 hours of operation.

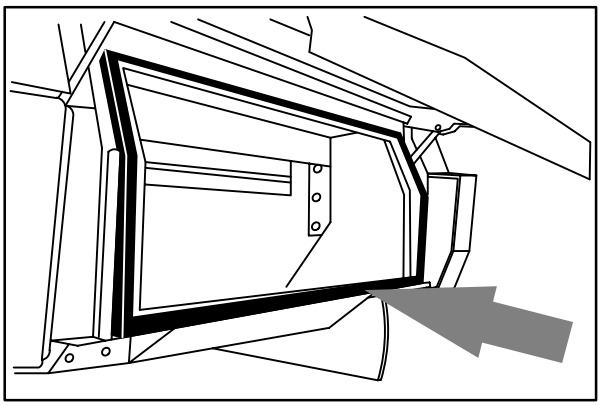

08497

HOPPER SIDE SKIRT

The hopper side skirt is located on the left side of the hopper.

Check the hopper side skirt for wear or damage daily.

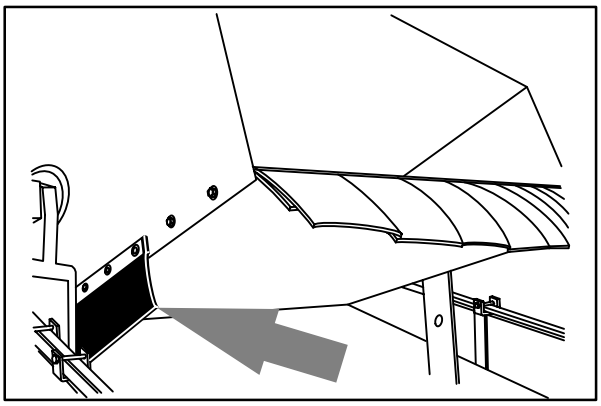

08492

HOPPER DUST SEAL

The hopper dust seal is located inside the hopper. It seals the hopper filter compartment.

Check the seal for wear or damage every 100 hours of operation.

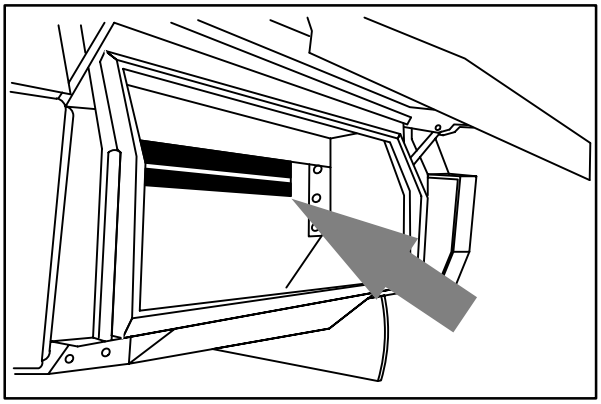

08498

HOPPER COVER SEAL

The hopper cover seals are located on the inside of the hopper cover. They seal the hopper filter compartment.

Check the seal for wear or damage every 100 hours of operation.

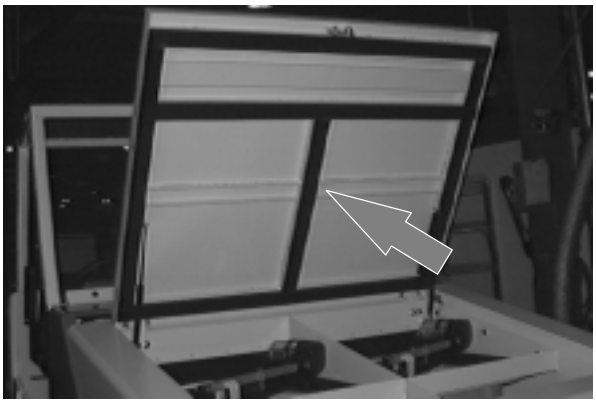

HOPPER VACUUM FAN SEAL

The hopper vacuum fan seal is mounted on the the vacuum fan inlet bracket.

Check the seal for wear or damage every 100 hours of operation.

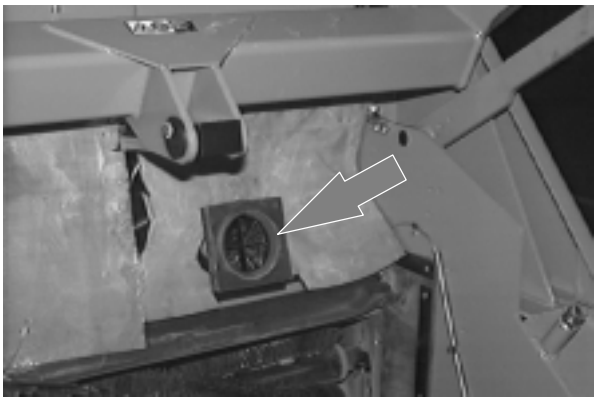

BRAKES AND TIRES

SERVICE BRAKES

The hydraulic service brakes are located on the front wheels.

The master brake cylinder is located on the fire wall.

Check the master brake cylinder fluid level every 400 hours of operation.

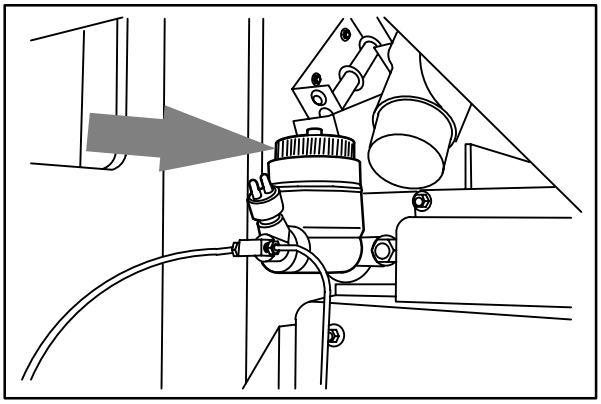

08501

PARKING BRAKE

The parking brake is set with foot pedal on machine below serial number 001103, and with a lever on machines serial number 001103 and above.

Adjust the parking brake whenever it becomes very easy to set the parking brake, when the machine rolls after setting the parking brake, and every 200 hours of operation.

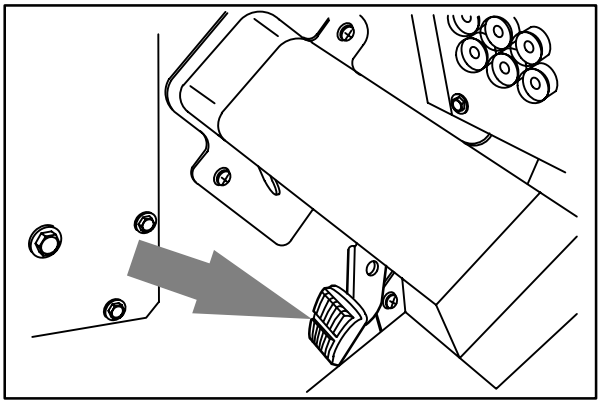

08574

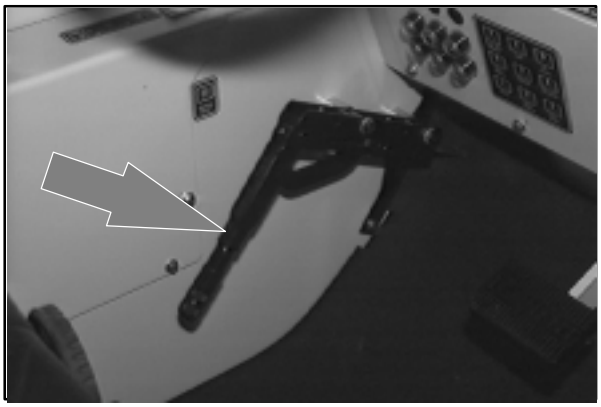

TIRES

The standard machine tires are pneumatic.

Check the tire pressure every 100 hours of operation. The proper tire air pressure is 690 – 758 kPa (100 – 110 psi).

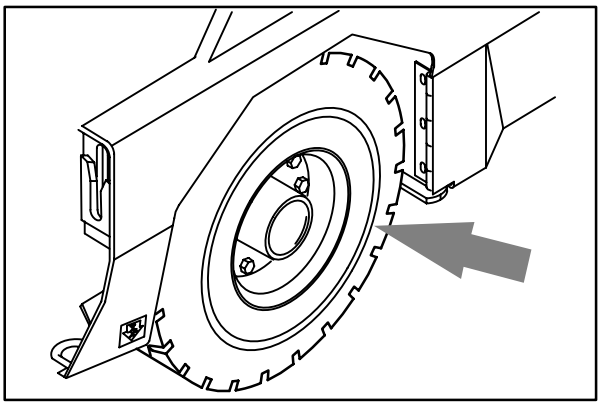

08575

REAR WHEEL

Torque the rear wheel nuts in a star pattern to 102 to 115 Nm (75 to 85 ft lb) after the first 50-hours of operation, and every 800 hours there after.

PUSHING OR TOWING MACHINE

The propelling pump has a towing valve to prevent damage to the hydraulic system when the machine is being towed. Turn the valve 90° clockwise before towing the machine.

You can push the machine from the front or rear, and tow it only from the rear.

ATTENTION! Do not push or tow the machine without using the towing valve, or the machine hydraulic system may be damaged.

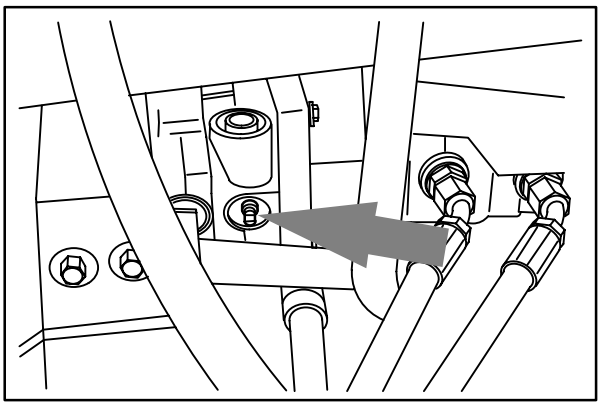

08576

MACHINE JACKING

You can jack up the machine for service at the designated locations. Use a jack of adequate capacity and good working condition. Always stop the machine on a flat, level surface and block the tires before jacking the machine up.

The front jacking locations are the flat bottom edge of the machine frame next to the front tires.

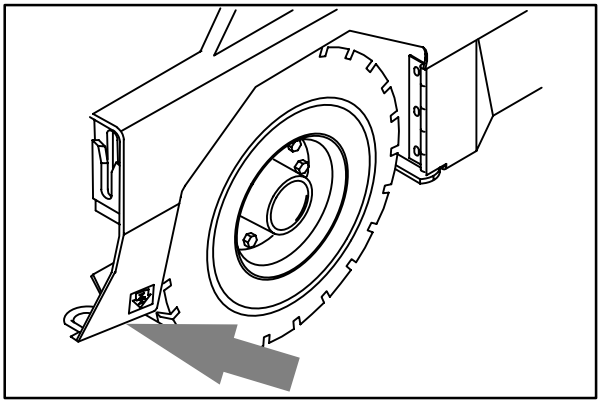

08485

The rear jacking location is the middle of the rear bumper.

FOR SAFETY: When servicing machine, block machine tires before jacking machine up.

FOR SAFETY: When servicing machine, jack machine up at designated locations only. Block machine up with jack stands.

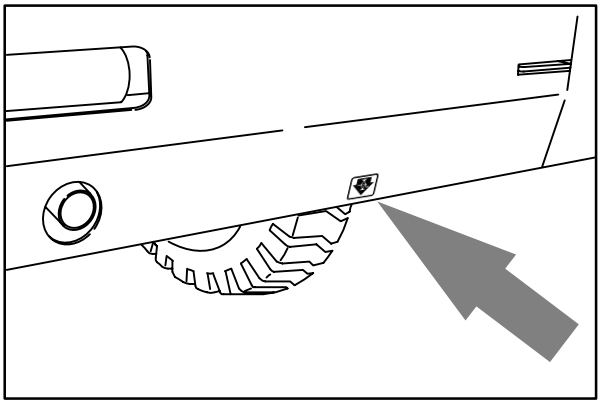

08586

STORING MACHINE

Before storing the machine for an extended period of time, the machine needs to be prepped to lessen the chance of rust, sludge, and other undesirable deposits from forming. Contact TENNANT service personnel.

SPECIFICATIONS

GENERAL MACHINE DIMENSIONS/CAPACITIES

Item	Dimension/capacity
Length	3050 mm (120 in)
Width	1780 mm (70 in)
Height	1335 mm (52.5 in)
Height with overhead guard	2095 mm (82.5 in)
Height with overhead guard and hazard light	2310 mm (91 in)
Height with cab	2095 mm (82.5 in)
Height with cab and hazard light	2310 mm (91 in)
Track	1560 mm (61.5 in)
Wheelbase	1420 mm (56 in)
Main brush diameter	405 mm (16 in)
Main brush length	1270 mm (50 in)
Side brush diameter	65 mm (26 in)
Sweeping path width	1270 mm (50 in)
Sweeping path width with side brush	1675 mm (66 in)
Main brush pattern width	50 to 65 mm (2.0 to 2.5 in)
Hopper weight capacity	907.2 kg (2000 lb)
Hopper volume capacity	849.5 L (30 cu ft)
Dust filter area	17.7 m^2 (190 sq ft)
GVWR	4068 kg (8970 lb)
Ceiling height minimum dumping clearance	3355 mm (11 ft)

GENERAL MACHINE PERFORMANCE

Item	Measure
Maximum forward speed	16 kmh (10 mph)
Maximum reverse speed	7.3 kmh (4.5 mph)
Minimum aisle turn width, left	3450 mm (135 in)
Minimum aisle turn width, right	4675 mm (184 in)
Maximum rated climb and descent angle	8.5°

POWER TYPE

Engine	Type	Ignition	Cycle	Aspiration	Cylinders	Bore	Stroke
Perkins 4.154XA	Piston	Diesel	4	Natural	4	89 mm (3.5 in)	102 mm (4 in)

Displacement	Net power, governed	Net power, maximum
2522 cc (154 cu in)	33.6 kw (45 hp) @ 2400 rpm	44.8 kw (60 hp) @ 3000 rpm

Fuel	Cooling system	Electrical system
Diesel Fuel tank: 45.5 L (12 gal)	Water/ethylene glycol antifreeze	12 V nominal
	Total: 13.6 L (3.6 gal)	50 A alternator
	Radiator: 6.1 L (1.6 gal)	

Idle speed, no load	Governed speed, under load
600 to 650 rpm	2400 ± 50 rpm

Engine lubricating oil with filter
6 L (6.3 qt) 10W30 SAE–CC/CD rated engine oil

STEERING

Type	Power source	Emergency steering
Rear wheel, hydraulic cylinder and rotary valve controlled	Hydraulic accessory pump	Manual

HYDRAULIC SYSTEM

System	Capacity	Fluid Type
Hydraulic reservoir	47.3 L (12.5 gal)	TENNANT part no. 65869 – above 7° C (45° F)
Hydraulic total	56.8 L (15 gal)	TENNANT part no. 65870 – below 7° C (45° F)

BRAKING SYSTEM

Type	Operation
Service brakes	Hydraulic drum brakes (2), one per front wheel, foot brake master cylinder activated
Parking brake	Utilize service brakes, cable actuated

TIRES

Location	Type	Size	Pressure
Front (2)	Pneumatic	6.5 x 23.5 in	690 – 758 kPa (100 – 110 psi)
Rear (1)	Pneumatic	6.5 x 23.5 in	690 – 758 kPa (100 – 110 psi)

INDEX

A

Air conditioning switch, 31

Air control vents, 31

Air filter, 67
- Dust cap, 67
- Element, 67
- Heavy duty SE filter option, 67

Air filter indicator, 67

Aisle turn, 84

B

Battery, 70
- Charging system, Light, 20

Bearings, Front wheel, 63

Belts, 70
- Engine fan belt, 70

Blower wand, 56–57

Blower wand lever, 26

Brake pedal, 12

Brakes, 33, 81
- Parking, Adjustment, 81
- Service, 81
- System specifications, 85

Brushes, 37–38, 46, 73–77
- Adjusting main brush taper, 76–78
- Checking main brush pattern, 74–76
- Checking side brush pattern, 77
- Door latch, 28
- Door seals, 79
- Door skirts, 78
- Main brush, 73
- Main brush bristle length, 73
- Replacing main brush, 73–75
- Replacing side brush, 77
- Side brush, 77–78
- Side brush bristle length, 77

Button, Horn, 19

C

Cab
- Air conditioning switch, 31
- Air control vents, 31
- Dome light switch, 30
- Fan speed switch, 31
- Heater knob, 30
- Recirculating air louvers, 30
- Windshield wiper switch, 30

Capacities, 84

Chains, 70
- Static drag, 70

Charging system light, 20

Circuit breakers, 27

Clogged filter light, 21

Control panel
- Charging system, 20
- Clogged filter light, 21
- Engine oil pressure, 20
- Engine water temperature light, 20
- Filter shaker switch, 23
- Fuel level gauge, 21
- Hazard light switch, 22
- Hopper door light, 21
- Hopper temperature light, 20
- Hourmeter, 22
- Main brush shut down light, 21
- Operating lights switch, 22
- Vacuum fan switch, 23

Controls, 10
- Air conditioning switch, 31
- Air control vents, 31
- Blower wand lever, 26
- Brake pedal, 12
- Charging system light, 20
- Circuit breakers, 27
- Clogged filter light, 21
- Directional pedal, 11
- Dome light switch, 30
- Engine oil pressure light, 20
- Engine water temperature light, 20
- Fan speed switch, 31
- Filter shaker switch, 23
- Fuel level gauge, 21

Hazard light switch, 22
Heater knob, 30
Hopper door lever, 17
Hopper door light, 21
Hopper lift lever, 19
Hopper rollout lever, 18
Hopper temperature light, 20
Horn button, 19
Hourmeter, 22
Ignition switch, 24
Latches, 28
Main brush down pressure knob, 28
Main brush shut down light, 21
Main brush switch, 25
Operating lights switch, 22
Operation, 11
Parking brake, 12, 13
Recirculating air louvers, 30
Side brush down pressure knob, 16
Side brush lever, 15
Side brush switch, 15
Steering wheel, 26
Steering wheel tilt lever, 26
Symbols, 8–9
Throttle lever, 14
Vacuum fan switch, 23
Windshield wiper switch, 30

Covers
Engine, Latch, 28
Hopper
Latch, 28
Seals, 80

D

Debris hopper, 71–72

Dimensions, 84

Directional pedal, 11
Toe adjustment, 12

Disengaging hopper support bar, 49–50

Dome light switch, 30

Doors
Brush
Latch, 28
Seals, 79
Skirts, 78
Engine side, Latch, 28
Grille, Latch, 28
Hopper, Seals, 79
Rear bumper, Latch, 28

Dust filter, 71
Changing, 71–72
Cleaning, 71

E

Electrical
Circuit breakers, 27
Ignition switch, 24

Emptying the hopper, 42–43

Engaging hopper support bar, 47–48

Engine, 66
Air filter, 67
Air filter indicator, 32, 67
Coolant temperature, Light, 20
Cooling system, 66
Cover latch, 28
Fan belt, 70
Fuel filter, 68
Fuel lines, 68
Lubrication, 62
Oil capacity, 62
Oil level, 5, 33
Oil pressure, Light, 20
Priming fuel system, 68–69
Side door latch, 28
Specifications, 85
Water seperator/fuel filter, 68

Engine Fuel filter, 68

Engine oil pressure light, 20

Engine water temperature light, 20

F

Fan speed switch, 31

Filter shaker switch, 23

Fuel filter, Engine, 68

Fuel level, 33

Fuel level gauge, 21

Fuel lines, 68

Fuel system
Fuel lines, 68
Priming, 68–69

Fuel tank, Gasoline, 6

G

Gauge, Fuel level, 21

Glow plugs light, 27

Grease fittings, Rear wheel support, 62

H

Hazard light switch, 22

Heater knob, 30

Hopper, 71–72
- Changing dust filter, 71–72
- Clogged filter, Light, 21
- Cover latch, 28
- Cover seal, 80
- Disengaging hopper support bar, 49–50
- Door lever, 17
- Door light, 21
- Door seals, 79
- Dust filter, 71
- Engaging hopper support bar, 47–48
- Filter cleaning, 71
- Filter shaker, 23
- Lift, 19
- Lip skirts, 78
- Rollout, 18
- Seals, 79
- Side skirt, 80
- Support bar, 29
- Temperature, Light, 20
- Thermo-Sentry, 73
- Thermo-sentry, 20
- Vacuum fan seal, 80

Hopper door, Operate, 17

Hopper door lever, 17

Hopper door light, 21

Hopper lift lever, 19

Hopper rollout lever, 18

Hopper support bar, 29

Hopper temperature light, 20

Horn button, 19

Hourmeter, 22

How the machine works, 32

Hydraulic fluid, 65

Hydraulic fluid reservoir, 64

Hydraulic hoses, 65

Hydraulics, 64–65
- Fluid, 65
- Fluid filter, 64
- Fluid level, 5, 64
- Hoses, 65
- Propelling motor, 66
- Reservoir, 64
- System specifications, 85

I

Ignition switch, 24

J

Jack points, 83

K

Knobs
- Heater, 30
- Main brush down pressure, 28
- Side brush down pressure, 16

L

Latches, 28
- Engine cover, 28
- Engine side door, 28
- Grille doors, 28
- Hopper cover, 28
- Main brush doors, 28
- Rear bumper door, 28

Levers
- Blower wand, 26
- Hopper door, 17
- Hopper lift, 19
- Hopper rollout, 18
- Parking brake release, 12, 13
- Side brush, 15
- Steering wheel tilt, 26
- Throttle, 14

Light, Main brush shut down, 21

Lights
- Charging system, 20
- Clogged filter, 21
- Engine oil pressure, 20
- Engine water temperature, 20
- Glow plugs, 27
- Hazard light switch, 22
- Hopper door, 21
- Hopper temperature, 20
- Operating lights switch, 22

Louvers, Recirculating air, 30

Lubrication, 62
- Engine, 62
- Front wheel bearings, 63
- Main brush adjustment, 63
- Rear wheel support, 62
- Side brush pivot pins, 63

M

Machine components, 7

Machine jacking, 83

Machine leaks, 32, 46

Machine tie−downs, 51

Main brush, 37–38, 73–76
- Adjust brush taper, 76–78
- Adjustment lubrication, 63
- Bristle length, 73
- Checking brush pattern, 74–76
- Door latch, 28
- Door seals, 79
- Door skirts, 78
- Down pressure, 28
- Maintenance, 73
- Replacing, 73–75
- Shut down light, 21
- Switch, 25

Main brush down pressure knob, 28

Main brush shut down light, 21

Main brush switch, 25

Maintenance, 60
- Intervals, 60–61
- Recommended, 6

Maintenance chart, 60–61

Motors, Propelling, 66

O

Operating lights switch, 22

Operation on inclines, 50

Operator Responsibility, 5

Operator seat, 29

Option, Hazard light switch, 22

Options, 52–59
- Air conditioning switch, 31
- Air control vents, 31
- Blower wand, 56–57
- Blower wand lever, 26
- Dome light switch, 30
- Fan speed switch, 31
- Heater knob, 30
- Heavy duty SE air filter, 67
- Recirculating air louvers, 30
- Regenerative filter system (RFS), 58–59
- Vacuum wand, 52–57
- Windshield wiper switch, 30

P

Parking brake, 12, 13, 81

Pedal, Directional, 11
- Toe adjustment, 12

Pedals
- Brake, 12
- Parking brake, 12

Pivot pins, Side brush, 63

Post-operation checklist, 46

Pre-operation checklist, 32–33

Preheat, Glow plugs, 27

Priming fuel system, 68–69

Pushing machine, 82

R

Radiator, 66
- Coolant level, 6, 66
- Coolant type, 66
- Flushing system, 67
- Hoses, 66

Rear wheel, 82

Recirculating air louvers, 30

Regenerative filter system (RFS), 58–59

S

Safety
Disengaging hopper support bar, 49–50
Engaging hopper support bar, 47–48
Hopper support bar, 29
Labels, 4
Precautions, 3

Seals, 78–80
Brush doors, 79
Hopper, 79
Hopper cover, 80
Hopper door, 79
Hopper vacuum fan seal, 80

Seat, 29
Adjustment, 29
Lift, 29

Service records, 46

Side brush, 38, 77–78
Bristle length, 77
Checking brush pattern, 77
Down pressure, 16
Lever, 15
Replacing, 77
Switch, 15

Side brush down pressure knob, 16

Side brush lever, 15

Skirts, 46, 78–79
Brush doors, 78
Hopper Lip, 78
Hopper side, 80
Rear, 79

Specifications, 84–85
Braking system, 85
Hydraulic system, 85
Machine capacities, 84
Machine dimensions, 84
Machine performance, 84
Power type, 85
Steering, 85
Tires, 85

Starting the machine, 34–35

Static drag chain, 70

Steering, 33
Specifications, 85

Steering wheel, 26

Steering wheel tilt lever, 26

Stop sweeping, 41

Stop the machine, 44–45

Storing machine, 83

Sweeping, 39–40

Sweeping and brush information, 37–38

Switches
Air conditioning, 31
Dome light, 30
Fan speed, 31
Filter shaker, 23
Hazard light, 22
Ignition, 24
Main brush, 25
Operating lights, 22
Side brush, 15
Vacuum fan, 23
Windshield wiper, 30

T

Thermo-sentry, 73

Thermo-sentry, 20

Throttle, Lever, 14

Throttle lever, 14

Tie—downs, 51

Tires, 81–83
Pressure, 82
Rear wheel, 82
Specifications, 85

Towing machine, 82

Travel speed, 84

Troubleshooting, 59

V

Vacuum fan switch, 23

Vacuum wand, 52–57

Vents, Air control, 31

W

Water seperator/fuel filter, 68

Windshield wiper switch, 30