3640
(Electric)

Sweeper

Parts Manual

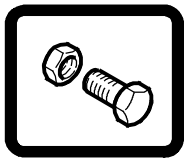

Tennant*True*® Parts

North America / International / Japan

For the latest Parts manuals and other language Operator manuals, visit:

www.tennantco.com/manuals

9014884
Rev. 15 (06-2022)

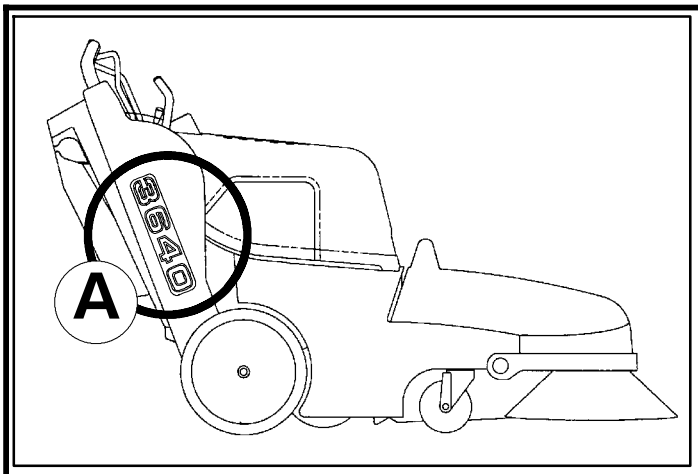

Ref	Part No.	Serial Number	Description	Qty.
1	82681	(000000-)	Bracket Wldt, Lpg Mount	1
▽ 2	63810	(000000-)	Latch Assy, Lpg Tank Mtg, W/Nut	4
▲ 3	51839	(000000-)	Nut Adjustable, Lpg Tank Mtg	2
4	49263	(000000-)	Tie, Cable	3
D	82556	(000000- 001039)	Bracket, Vaporizer	1
	54930	(000000-)	Vaporizer, LPG	1

C

HOW TO ORDER PARTS - See diagram above

Only use TENNANT Company supplied or equivalent parts. Parts and supplies may be ordered online, by phone, by fax or by mail.

Follow the steps below to ensure prompt delivery.

1. **(A)** Identify the machine model.
2. **(B)** Identify the machine serial number from the data label.
3. **(C)** Ensure the proper serial number is used from the parts list.
4. Identify the part number and quantity. Do not order by page or reference numbers.
5. Provide your name, company name, customer ID number, billing and shipping address, phone number and purchase order number.
6. Provide detail shipping instructions.

(D) ▽ - identifies an assembly
▲ - identifies parts included in assembly

Please fill out at time of installation for future reference.

Model No. - _____

Serial No. - _____

Machine Options - _____

Sales Rep. - _____

Sales Rep. phone no. - _____

Customer ID Number - _____

Installation Date - _____

Tennant Company
10400 Clean Street
Eden Prairie, MN 55344-2650 USA
Phone: (800) 553-8033

www.tennantco.com

Tennant Company Japan
9F Industry & Trade Center
Yokohama, Kanagawa 231-0023
Japan
Telephone: 81-45-640-5630
Fax: 81-45-640-5604

www.tennant.co.jp

Specifications and parts are subject to change without notice.

Copyright © 2009 - 2022 TENNANT Company, Printed in U.S.A.

JP

パーツの発注方法 ?上記の図を参照してください

TENNANT社製のパーツまたは同等品のみをお使いください。
パーツやサプライ品のご注文は、オンライン、電話、FAX、または手紙でお願いいたします。
確実にお届けできるように、以下の情報お知らせください。

1. **(A)** 製品のモデル名をお知らせください。
2. **(B)** 製品のデータラベルに印刷されているシリアル番号をお知らせください。
3. **(C)** パーツリストを参照して、シリアル番号が正しいかご確認ください。
4. パーツ番号と数量をお知らせください。マニュアル/カタログのページ番号や参照番号でのご注文はご遠慮ください。
5. お客様のお名前、会社名、顧客ID番号、請求/発送先住所、電話番号、注文書番号をお知らせください。
6. 発送に関するご希望があれば、明記してください。

(D) ▽ - アセンブリを示します
▲ - アセンブリに含まれるパーツを示します

後日確認できるように、設置時に記入してください。

モデルNo. - _____

シリアルNo. - _____

製品のオプション- _____

販売代理店 - _____

販売代理店の電話番号 - _____

顧客ID番号 - _____

設置日 - _____

SECTION 2

Contents **Page**

Fig. 1 - General Recommended Maintenance Items 2- 2
Fig. 2 - Replacement Brushes 2- 3
Fig. 3 - Main Frame Group 2- 4
Fig. 4 - Drive System Group 2- 6
Fig. 5 - Main Brush Group 2- 8
Fig. 6 - Side Brush Group 2- 10
Fig. 7 - Hopper Group 2- 12
Fig. 8 - Vacuum Fan Group 2- 14
Fig. 9 - Vacuum Housing Group 2- 16
Fig. 10 - Vacuum Housing Group (Japan Market) 2- 18
Fig. 11 - Panel Filter Group 2- 20
Fig. 12 - Brush Lift Handles Group 2- 22
Fig. 13 - Clutch and Shift Handle Group 2- 24
Fig. 14 - Electric Motor Group 2- 26
Fig. 15 - Battery Cover Group 2- 28
Fig. 16 - EE Battery Cover And Circuit Breaker Group 2- 30
Fig. 17 - Battery Cable Harness Group 2- 32
Fig. 18 - Instrument Panel Group 2- 33
Fig. 19 - EE Instrument Panel Group 2- 34
Fig. 20 - Electrical Schematic 2- 35
Fig. 21 - Wire Harness Group 2- 36
Fig. 21 - Wire Harness Group (S/N 10983966 -) 2- 37
Fig. 21 - Wire Harness Group, EE (S/N 000000 - 10417525) 2- 38
Fig. 21 - Wire Harness Group, EE (S/N 10417526- 10983965) 2- 39
Fig. 21 - Wire Harness Group, EE (S/N 10983966 -) 2- 40
Fig. 22 - Label Group 2- 42

Fig. 1 - General Recommended Maintenance Items

	Ref.	Part No.	Serial Number	Description	Qty.
▽	1	80269	(000000-)	Replmt Kit, Skirts & Seals	1
▲	2	379214	(000000-)	Skirt, Rear	1
▲	3	378811	(000000-)	Kit, Side Skirt, Rh	1
▲	4	378812	(000000-)	Kit, Skirt, Side, Lh	1
▲	5	80373	(000000-)	Seal	1
▲	6	80315	(000000-)	Seal	1
▲	7	373142	(000000-)	Skirt, Hopper	1
▲	8	80392	(000000-)	Gasket, Cuff	1
▲	9	80096	(000000-)	Seal, Chamber	1
▲	10	80260	(000000-)	Gasket, Vac Fan	1
▲	11	72970	(000000-)	Rivet, Plstc	5
▲	12	80186	(000000-)	Plate, Skirt, Retainer	5
	13	1067680	(000000-)	Bag, Vacuum, Paper [1pick=1pkg] (1 Pkg = 10 Bags)	1
	14	80141	(000000-)	Angle, Lip	1
	15	222403	(000000-)	Wheel, 2.O Dia	1
	16	1037199	(000000-)	Filter, Panl, Dust, 2.7 X 15.0 X 22.0	1
	17	80117	(000000-)	Kit, Replmt Main Br Belt	1
	18	80464	(000000-)	Hose, Flex	1
	19	01739	(000000-)	Kit, Brush	1
	20	01740	(000000-)	Spring, Brush	1
	21	80125	(000000-)	Brush & Spring Assy	1
	22	80152	(000000-)	Belt, Flat	1
	23	80940	(000000-)	Belt, V	1
	24	377365	(000000-)	Pin, Brush, Main	1

Fig. 2 - Replacement Brushes

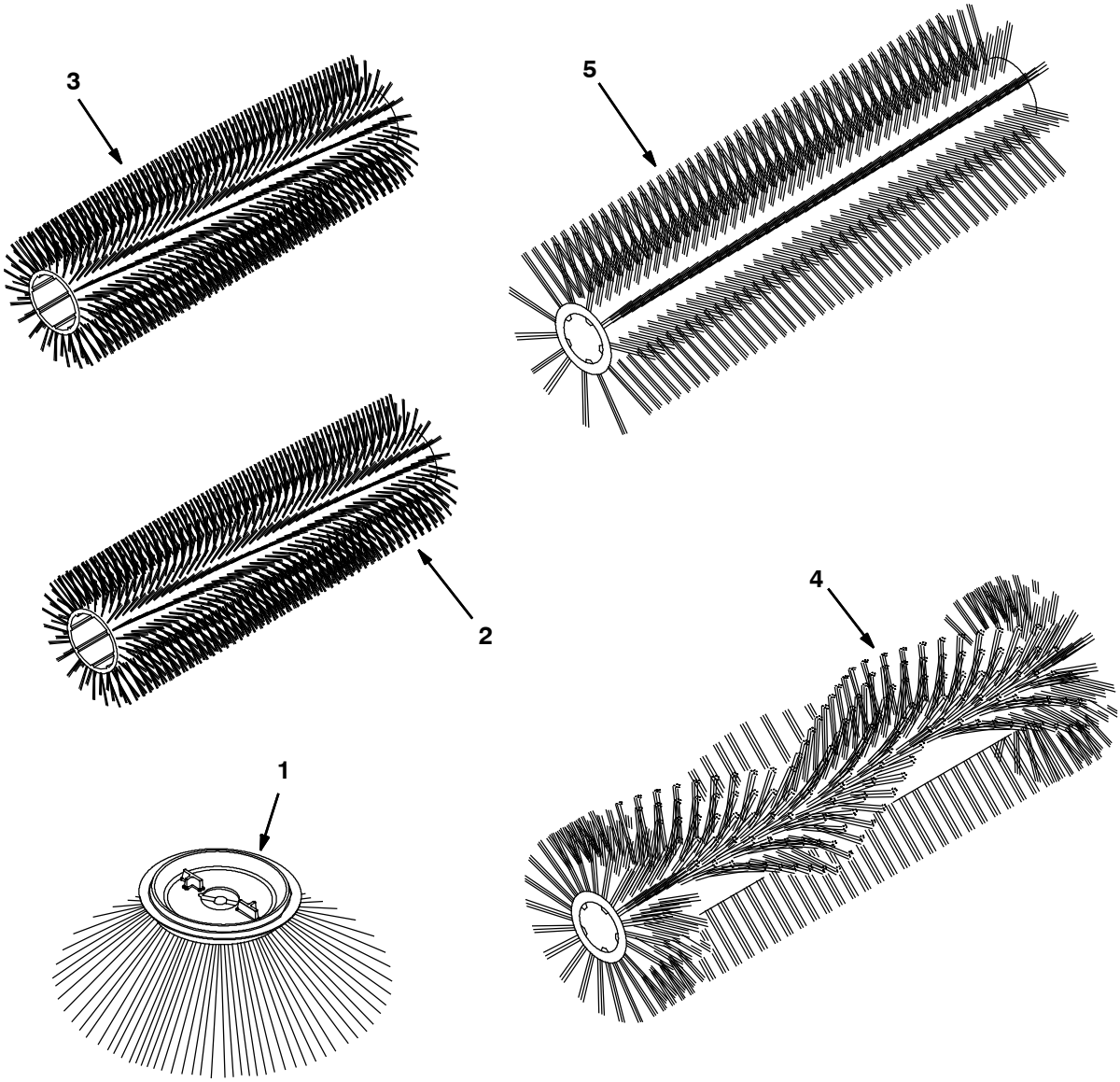

350846 - ALL

Ref.	Part No.	Serial Number	Description	Qty.
1	80042	(000000-)	Brush, Side	1
1	378804	(000000-)	Brush, Side STFP	1
2	80058	(000000-)	Brush, Sweep, 24Lg Poly	1
3	80355	(000000-)	Brush, Carpet	1
4	80351	(000000-)	Brush, Sweep, Sandwedge	1
5	378802	(000000-)	Brush, Sweep, P&W	1

Fig. 3 - Main Frame Group

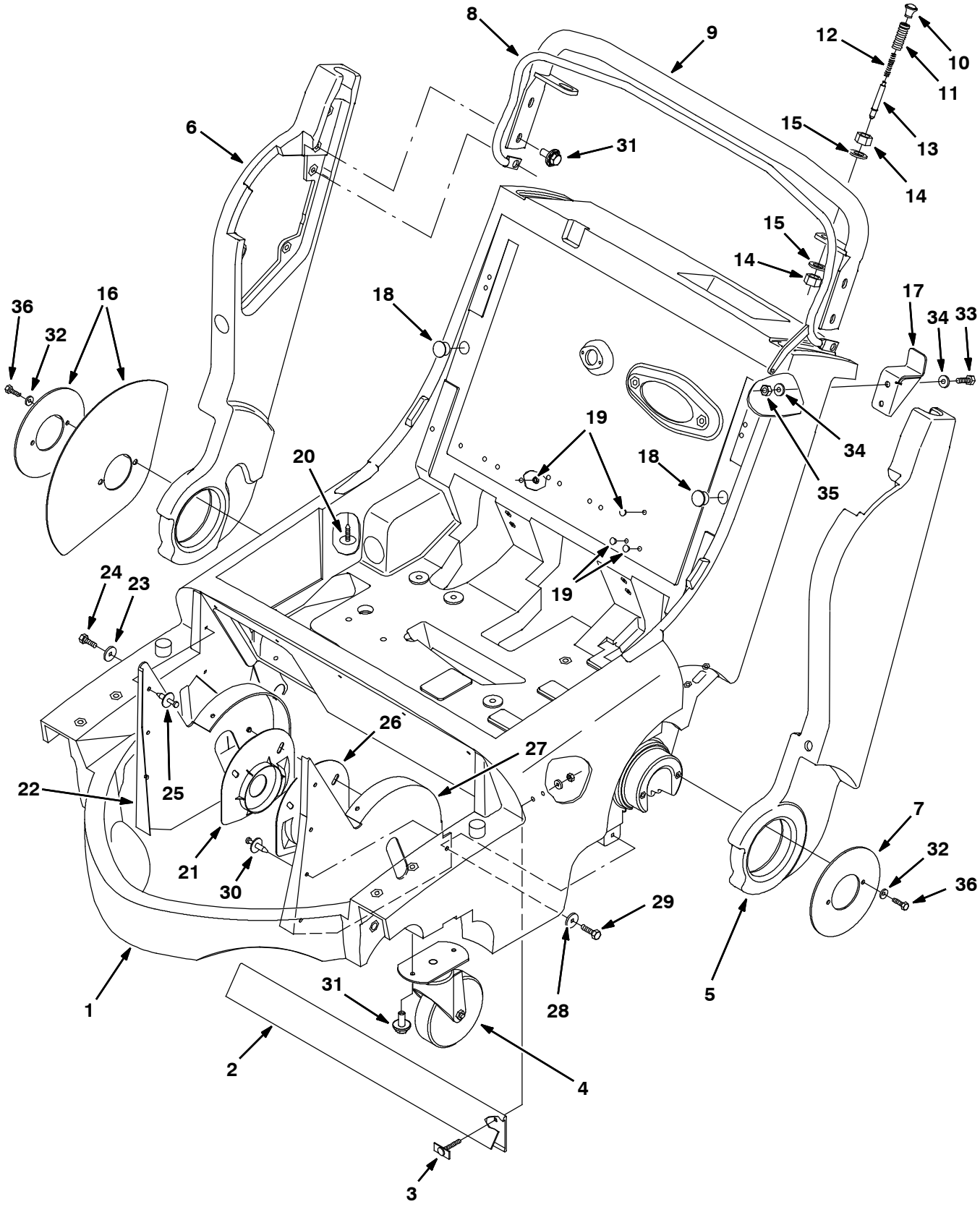

350848 - ALL

Fig. 3 - Main Frame Group

	Ref.	Part No.	Serial Number	Description	Qty.
	1	9005828	(000000-)	Frame, Main, [3640]	1
	2	379214	(000000-)	Skirt, Rear	1
	3	80186	(000000-)	Plate, Skirt, Retainer	5
	4	80028	(000000-)	Caster, 5.0D X 1.37 Wheel	2
	5	9005830	(000000-)	Handle, Main, Lh, Afmkt [3640]	1
	6	9005831	(000000-)	Handle, Main, Rh, Afmkt [3640]	1
	7	80037	(000000-)	Plate, Retainer	1
	8	80945	(000000-)	Lever, Clutch, Wldt	1
	9	80430	(000000-)	Handle, Steering	1
▽		379228	(000000-)	Kit, Repair, Adj Handle	2
▲	10	80180	(000000-)	Knob,#10- 32,0.81Dia,Plastic	2
▲	11	80445	(000000-)	Sleeve, Threaded	2
▲	12	80448	(000000-)	Spring, Comp 0.34Idx.045Wire	2
▲	13	373141	(000000-)	Pin, Handle Adjustment	2
▲	14	763066	(000000-)	Nut,Hx Jam M16X2.0 Din 439	4
▲	15	04400	(000000-)	Washer- Flt 17 X30X3 Ss M16	2
	16	80105	(000000-)	Shield, Dirt Kit	1
	17	80106	(000000-)	Bracket, Handle Stop	1
	18	130161	(000000-)	Plug, Hole, Rnd, 0.88d, Blk	2
	19	80061	(000000-)	Plug, Hole .297	4
	20	378770	(000000-)	Clip	1
▽		378811	(000000-)	Kit, Skirt, Rh	1
▲	21	378806	(000000-)	Guard	1
▲	22	378809	(000000-)	Skirt	1
▲	23	41178	(000000-)	Washer, Flat, .25 Fender	1
▲	24	20394	(000000-)	Screw, Hex, #10 X 0.62, Fmg Ab	1
▲	25	72968	(000000-)	Rivet, Plstc	7
▽		378812	(000000-)	Kit, Skirt, Lh	1
▲	26	378807	(000000-)	Guard	1
▲	27	378810	(000000-)	Skirt	1
▲	28	41178	(000000-)	Washer, Flat, .25 Fender	1
▲	29	20394	(000000-)	Screw, Hex, #10 X 0.62, Fmg Ab	1
▲	30	72968	(000000-)	Rivet, Plstc	7
	31	1020341	(000000-)	Screw, Hex, M8 X 1.25 X 20, Ss, Sems	6
	32	32490	(000000-)	Washer, Flat, 0.25 Std	4
	33	76570	(000000-)	Screw, Hex, M8 X 1.25 X 30, 8.8	2
	34	32491	(000000-)	Washer, Flat, 0.31 Std	4
	35	08709	(000000-)	Nut, Hex, Lock, M8 X 1.25, Nl	2
	36	06942	(000000-)	Screw, Hex, M6 X 1.0 X 16, 8.8	4

Fig. 4 - Drive System Group

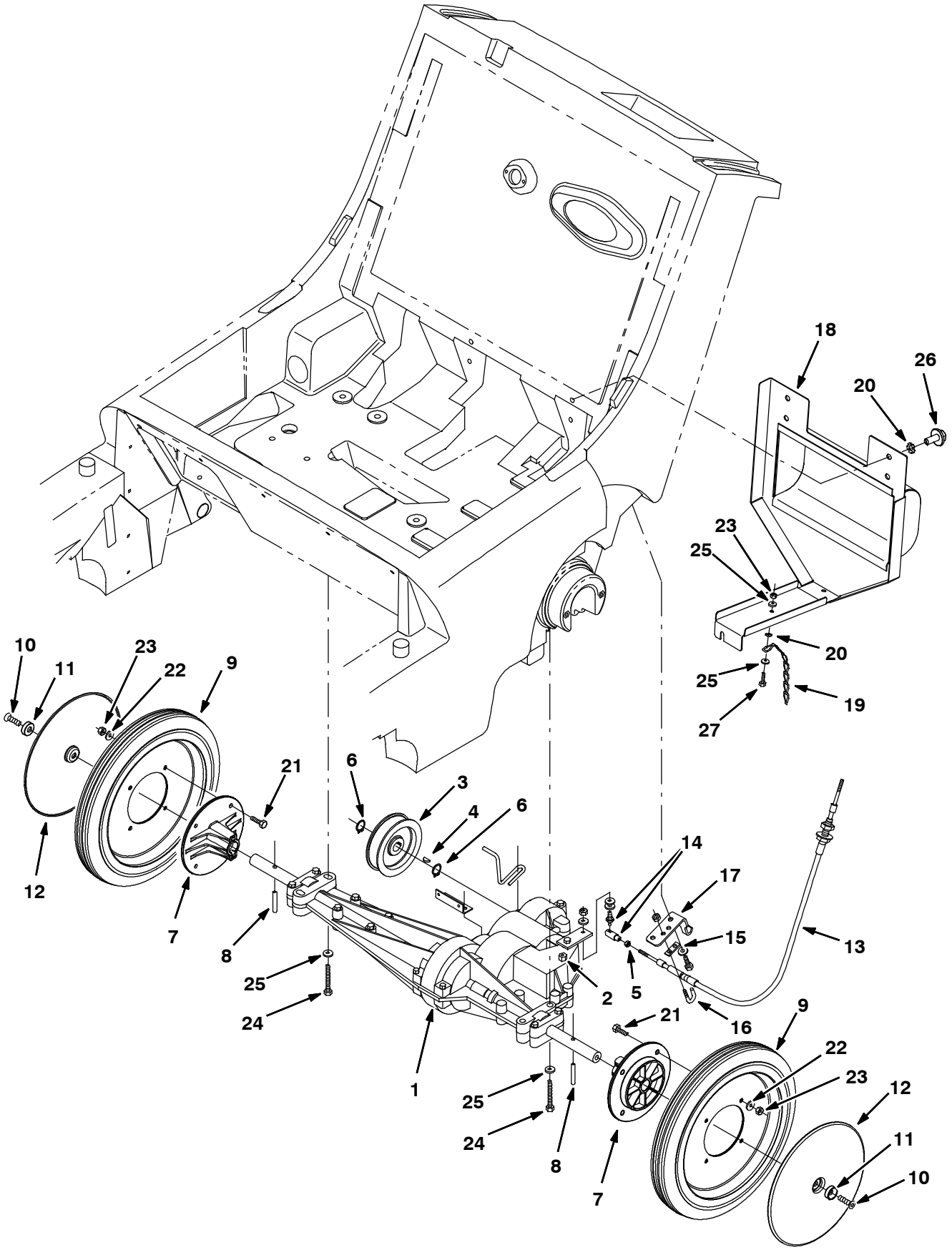

350850 - ALL

Fig. 4 - Drive System Group

	Ref.	Part No.	Serial Number	Description	Qty.
▽	1	80476	(000000-)	Kit, Transaxle Assy (see breakdowns)	1
▲	2	80471	(000000-)	Fitting, Relief 1/8	1
	3	80110	(000000-)	Sheave, Flat, 3.7Od	1
	4	00500-4	(000000-)	Key-Wdruff 0.12 0.50 Asa#0404	1
	5	01713	(000000-)	Nut-Hx Std 10-32 G2 Pltd	1
	6	33373	(000000-)	Ring, Retain,Ex,0.62Od,Heavydt	1
	7	373105	(000000-)	Hub, Wheel	2
	8	18276	(000000-)	Pin,Dowel,0.2502Dia.X 1.50 Lg	2
	9	80148	(000000-)	Tire & Wheel Assy	2
	10	222692	(000000-)	Screw-Flat 8X1.25 25Nylon Loc	2
	11	80922	(000000-)	Washer, Finish M8 Pltd	2
	12	80465	(000000-)	Hubcap	2
	13	80415	(000000-)	Cable, Shift, Push Pull	1
	14	80158	(000000-)	Balljoint,	1
	15	80429	(000000-)	Support, Cable	1
	16	80425	(000000-)	Bolt, Bent, M6	1
	17	80113	(000000-)	Plate, Support, Cable	1
	18	80962	(000000-)	Plate Wldt, Backstop	1
	19	222842	(000000-)	Chain, Static, Brass	1
	19	46307	(000000-)	Chain, Coil, Str, 2/0, 05.5l 04 Link (Japan)	1
	20	41141	(000000-)	Washer, Lock, Int-Ext, .31	2
	21	06943	(000000-)	Screw, Hex, M6 X 1.0 X 20, 8.8	8
	22	32483	(000000-)	Washer, Flat, 0.25 Sae	8
	23	08708	(000000-)	Nut, Hex, Lock, M6 X 1.0, Nl	9
	24	06949	(000000-)	Screw, Hex, M6 X 1.0 X 50, 8.8	4
	25	32490	(000000-)	Washer, Flat, 0.25 Std	6
	26	1020341	(000000-)	Screw, Hex, M8 X 1.25 X 20, Ss, Sems	4
	27	06943	(000000-)	Screw, Hex, M6 X 1.0 X 20, 8.8	1

Fig. 5 - Main Brush Group

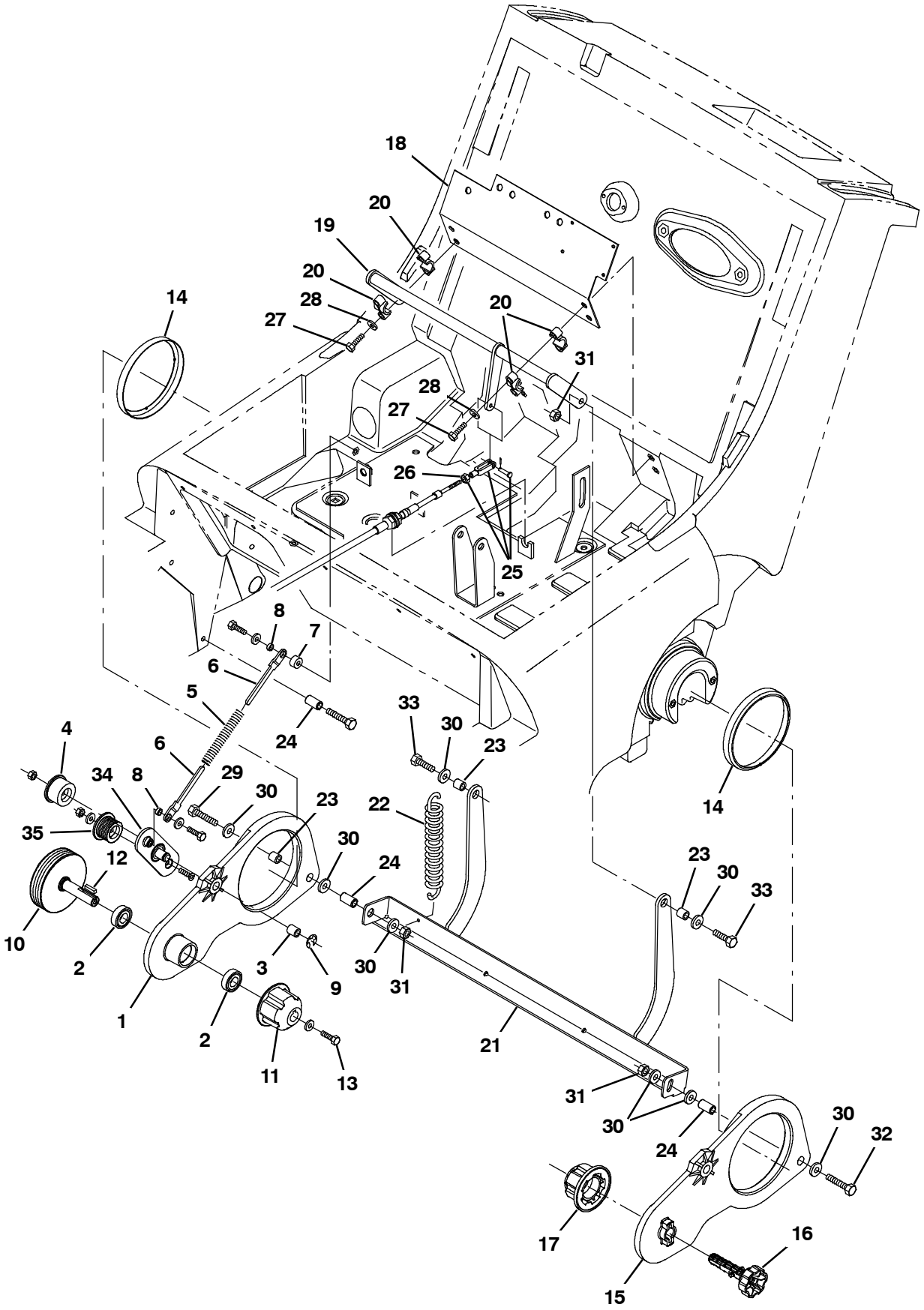

350852 - ALL

Fig. 5 - Main Brush Group

	Ref.	Part No.	Serial Number	Description	Qty.
▽	1	80047	(000000-)	Arm, Brush	1
▲	2	41360	(000000-)	Bearing, Ball, 0.59b 1.26d 0.35w[2seal]	2
▲	3	63233	(000000-)	Bushing, Sleeve, 0.50b 0.59d 0.50l, Bnz	1
	4	80079	(000000-)	Pulley, Idler	1
	5	80159	(000000-)	Spring, Comp,	1
	6	373140	(000000-)	Strip, Spring, Comp	2
	7	80937	(000000-)	Sleeve, .025Ob .62D .34Pm	1
	8	80491	(000000-)	Sleeve, .25Ob .38D .156Ss	2
	9	80492	(000000-)	Ring, Retaining, Ex	1
	10	80048	(000000-)	Shaft, Sheave	1
	11	378805	(000000-)	Plug, Brush Drive	1
	12	00911	(000000-)	Key Square 0.18 0.18 00.75 Lg	1
	13	11329	(000000-)	Scr- Hexssm 6X1.0 16 Nylonloc	1
	14	80371	(000000-)	Ring, Wear	2
	15	80424	(000000-)	Arm, Brush, Idler Side	1
	16	377365	(000000-)	Pin, Main Brush	1
	17	1057629	(000000-)	Plug, Idler, Brush [Sgl Brg]	1
	18	80956	(000000-)	Plate, Support, Cross Shaft	1
	19	80379	(000000-)	Shaft, Wldt, Cross	1
	20	80387	(000000-)	Block, Bearing 0.625Dia	4
	21	80384	(000000-)	Link Wldt, Brush Lift	1
	22	379217	(000000-)	Spring, Extension	1
	23	222460	(000000-)	Sleeve	3
	24	80395	(000000-)	Sleeve, .318B .50D .65Ss	3
▽	25	27880	(000000-)	Yoke Assy.	1
▲	26	01713	(000000-)	Nut- Hx Std 10- 32 G2 Pltd	1
	27	06946	(000000-)	Scr- Hex m06 x 1.0x 35 8.8	4
	28	32490	(000000-)	Washer- Flt	4
	29	39278	(000000-)	Screw, Hex, M8 X 1.25 X 50, 8.8	1
	30	32491	(000000-)	Washer, Flat, 0.31 Std	8
	31	08709	(000000-)	Nut, Hex, Lock, M8 X 1.25, Nl	4
	32	06955	(000000-)	Screw, Hex, M8 X 1.25 X 35, 8.8	1
	33	76570	(000000-)	Screw, Hex, M8 X 1.25 X 30, 8.8	2
	34	80053	(000000-)	Plate, Pivot	1
	35	80075	(000000-)	Pulley, Idler	1

Fig. 6 - Side Brush Group

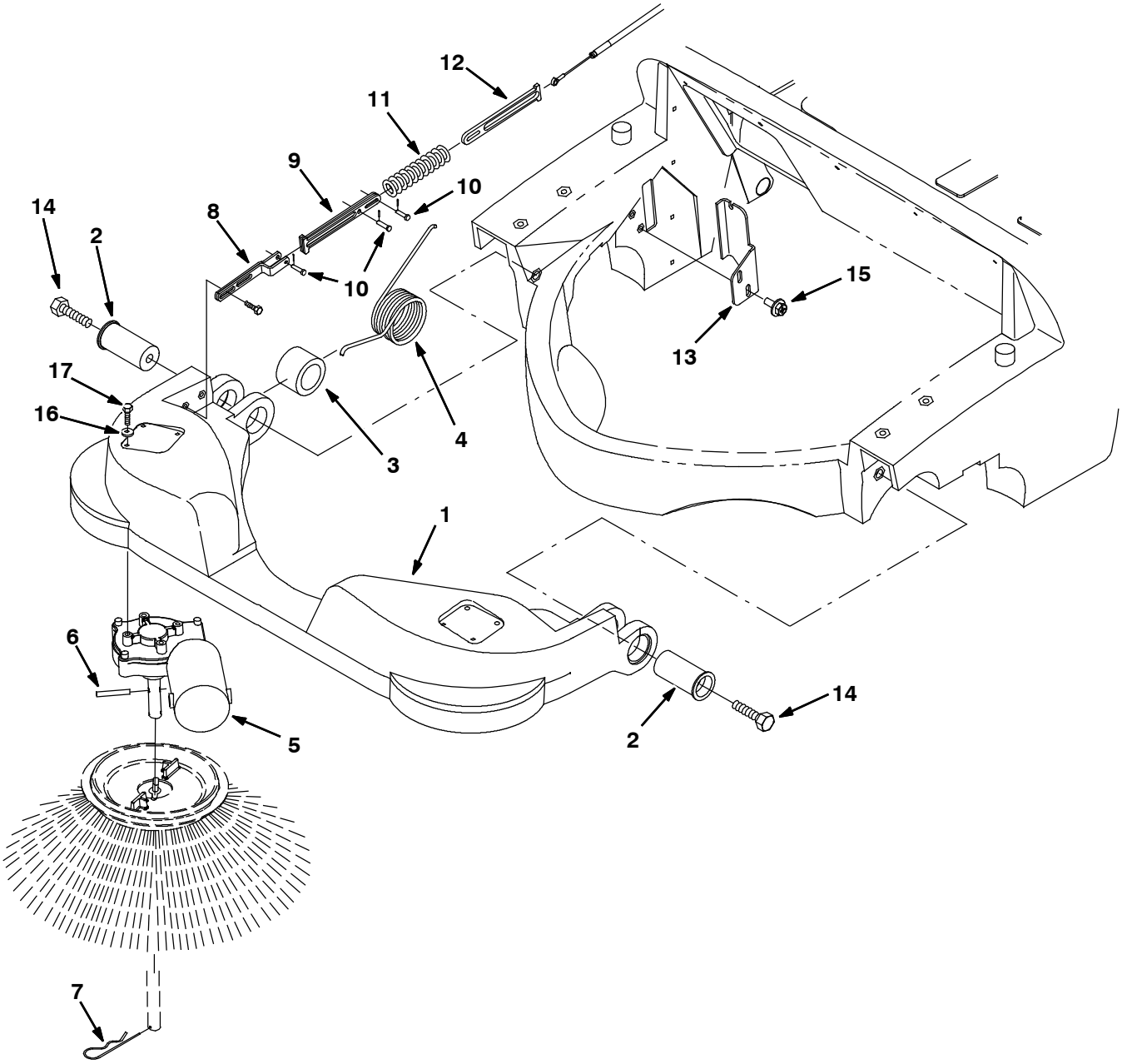

10350854 - E

Fig. 6 - Side Brush Group

	Ref.	Part No.	Serial Number	Description	Qty.
	1	9005829	(000000-)	Housing, Brush, Side, Afmkt [3640]	1
	2	80016	(000000-)	Pivot, Bushing	2
	3	80321	(000000-)	Sleeve, 1.45B 2.1D 1.5 Pltd	1
	4	379207	(000000-)	Spring, Torsion	1
▽	5	1056183	(000000-)	Motor, Ele, 24vdc 0068rpm 0.08hp 04.5a	1
▲		80126	(000000-)	Brush&Spring Assy Se	1
▲		80127	(000000-)	Brush Cap Se	2
▲		369795	(000000-)	Holder, Brush	2
▲		369796	(000000-)	Clip	2
	6	11516	(000000-)	Pin,Roll,.25Odx1.75L,.250/.256	1
	7	02942	(000000-)	Pin,Hair Cotter .12Wire 2.37Sl	1
	8	80155	(000000-)	Bracket Wldt, Lift	1
	9	379216	(000000-)	Strip, Spring	2
	10	76782	(000000-)	Pin,Clevis,0.19 Dia.X 0.75 Lg	3
	11	80484	(000000-)	Spring, Comp, 0.74Idx.11 Wire	1
	12	379215	(000000-)	Strip, Spring	1
	13	80010	(000000-)	Bracket, Cable	1
	14	06974	(000000-)	Screw, Hex, M12 X 1.75 X 80, 8.8	2
	15	1034731	(000000-)	Screw, Hex, M6 X 1.00 X 16, Sems, Ss	2
	16	32490	(000000-)	Washer, Flat, 0.25 Std	4
	17	06942	(000000-)	Screw, Hex, M6 X 1.00 X 16, 8.8	4

Fig. 7 - Hopper Group

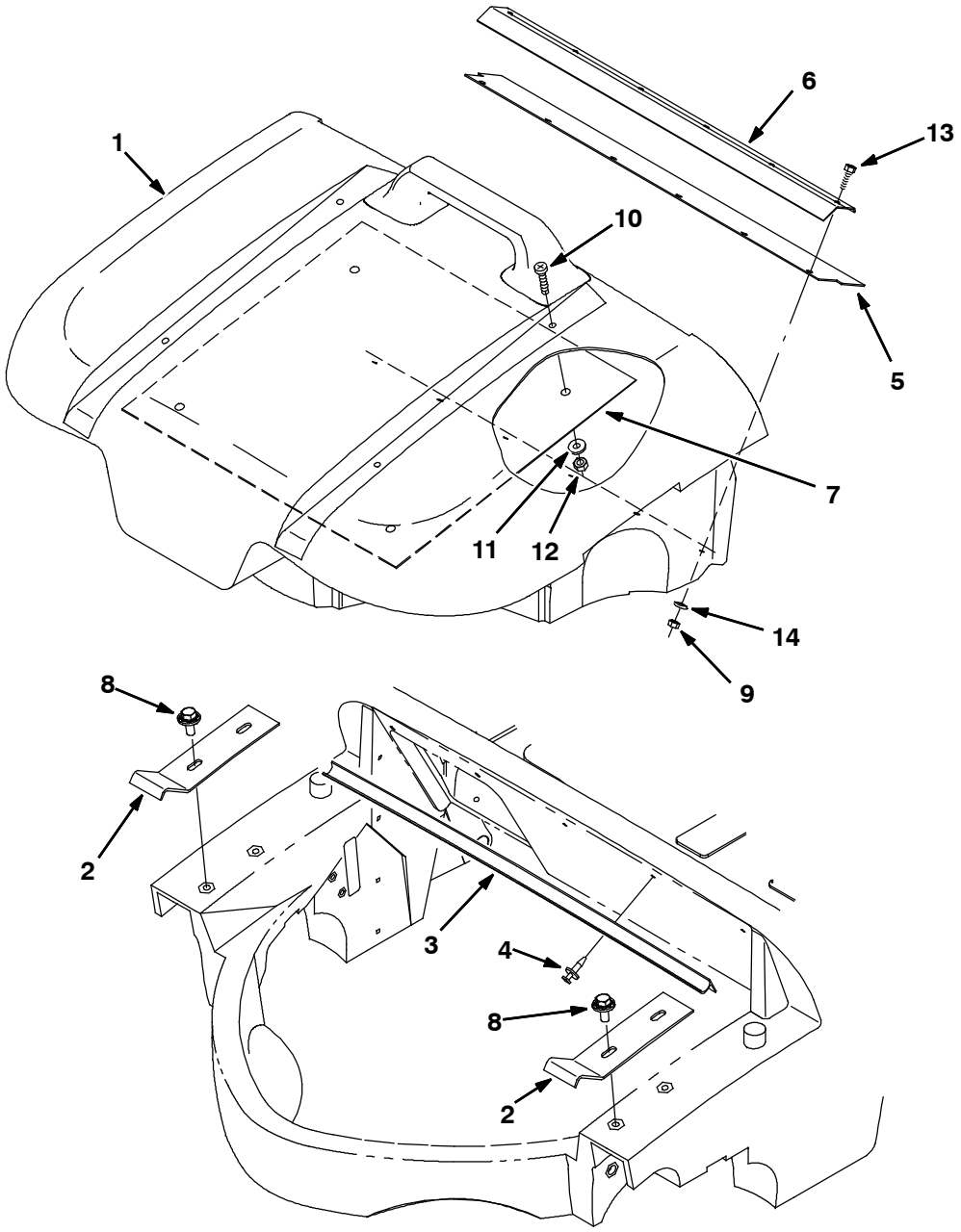

350856 - ALL

Fig. 7 - Hopper Group

Ref.	Part No.	Serial Number	Description	Qty.
1	9005833	(000000-)	Hopper, Afmkt [3640]	1
2	80958	(000000-)	Bracket, Support	2
3	80315	(000000-)	Seal	1
4	72970	(000000-)	Rivet, Plstc	5
5	373142	(000000-)	Skirt, Hopper	1
6	80141	(000000-)	Angle, Lip	1
7	80266	(000000-)	Plate, Firewall	1
8	1020341	(000000-)	Screw, Hex, M8 X 1.25 X 20, Ss, Sems	4
9	08712	(000000-)	Nut, Hex, Lock, M6 X 1.0, Ss, Nl	6
10	09737	(000000-)	Screw, Pan, M8 X 1.25 X 20, 4.8	4
11	01685	(000000-)	Washer, Flat, 0.31 Ss	4
12	08713	(000000-)	Nut, Hex, Lock, M8 X 1.25, Nl, Ss	4
13	08716	(000000-)	Screw, Hex, M6 X 1.0 X 20, Ss	6
14	32490	(000000-)	Washer, Flat, 0.25 Std	6

Fig. 8 - Vacuum Fan Group

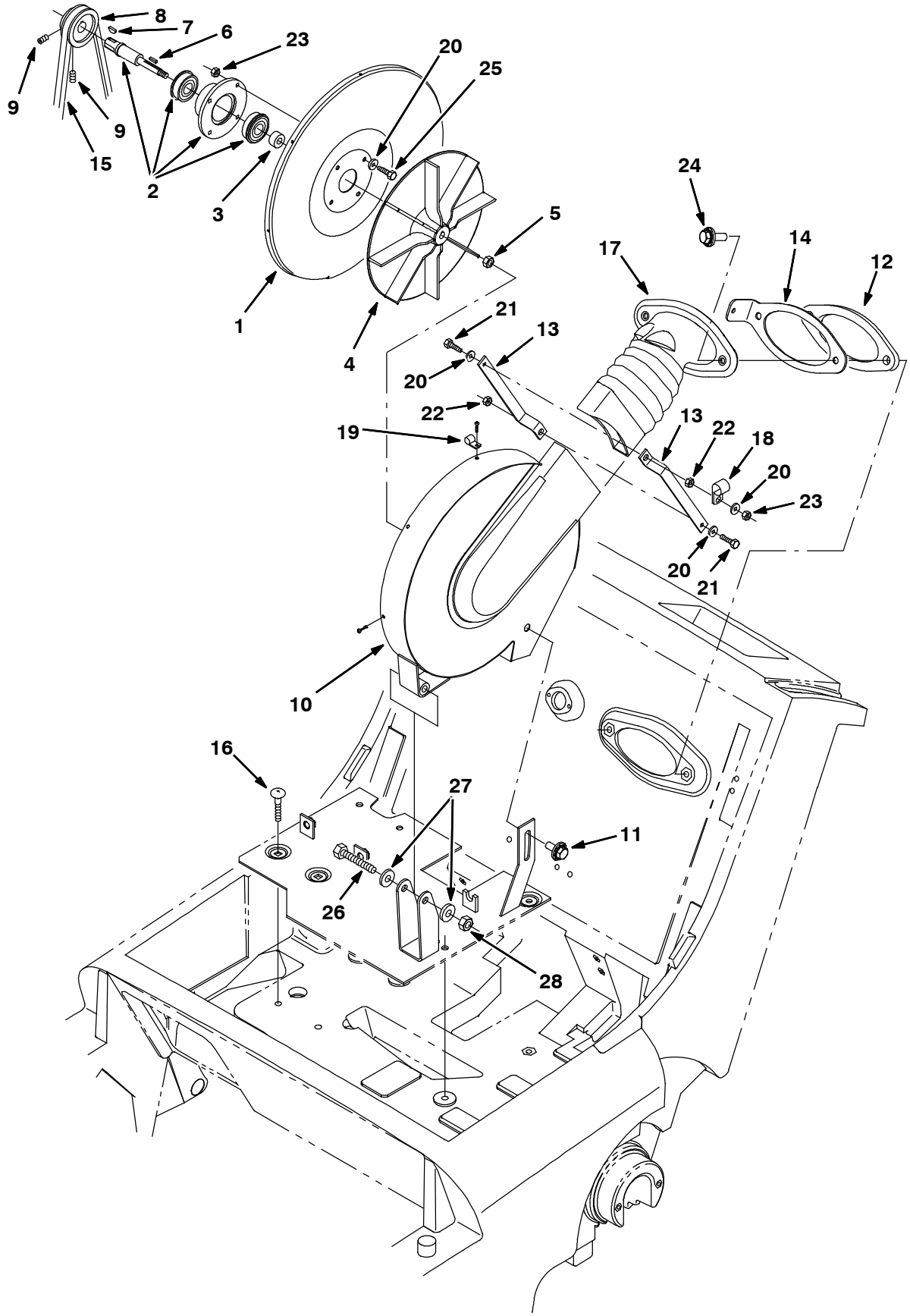

350858 - E

Fig. 8 - Vacuum Fan Group

Ref.	Part No.	Serial Number	Description	Qty.
1	80314	(000000-)	Plate, Backing, Vac Fan	1
2	16934	(000000-)	Shaft,Brg&Flange Assy- Fan	1
3	379203	(000000-)	Spacer	1
4	80320	(000000-)	Impeller, 9.06 Dia X 0.375B	1
5	87299	(000000-)	Nut- Hxflexloc .31- 24 Thin Pltd	1
6	00960	(000000-)	Key Square 0.12 0.12 00.50 Lg	1
7	00500- 4	(000000-)	Key- Wdruff 0.12 0.50 Asa#0404	1
8	1025304	(000000-)	Sheave, [3l/4l],1grv, 1.8/2.1pd 0.63b	1
9	46820	(000000-)	Scr- Set .31- 18X0.38 Nylon Loc	2
10	80088	(000000-)	Vacuum Fan Housing	1
11	1020341	(000000-)	Screw, Hex, M8 X 1.25 X 20, Ss, Sems	1
12	80260	(000000-)	Gasket, Vac Fan	1
13	80104	(000000-)	Bar, Transition Mtg	2
14	80029	(000000-)	Plate, Vac Fan, Prop Rod	1
15	80940	(000000-)	V- Belt 3L 230 - One	1
16	69915	(000000-)	Bolt- Carrm 8X1.25 40 4.6	2
17	80136	(000000-)	Transition, Vacfan, Electric	1
18	67767	(000000-)	Clamp, Cable	1
19	09385	(000000-)	Clamp, Cable, Poly	1
20	32490	(000000-)	Washer, Flat, 0.25 Std	7
21	06943	(000000-)	Screw, Hex, M6 X 1.0 X 20, 8.8	2
22	07790	(000000-)	Nut, Hex, Flng, M6 X 1.0	2
23	08708	(000000-)	Nut, Hex, Lock, M6 X 1.0, Nl	5
24	1072628	(000000-)	Screw, Hex, M8 X 1.25 X 25, Ss, Sems	2
25	06942	(000000-)	Screw, Hex, M6 X 1.0 X 16, 8.8	4
26	06963	(000000-)	Screw, Hex, M10 X 1.5 X 60, 8.8	1
27	32485	(000000-)	Washer, Flat, 0.38 Sae	2
28	41430	(000000-)	Nut, Hex, Lock, M10 X 1.5, Nl	1

Fig. 9 - Vacuum Housing Group

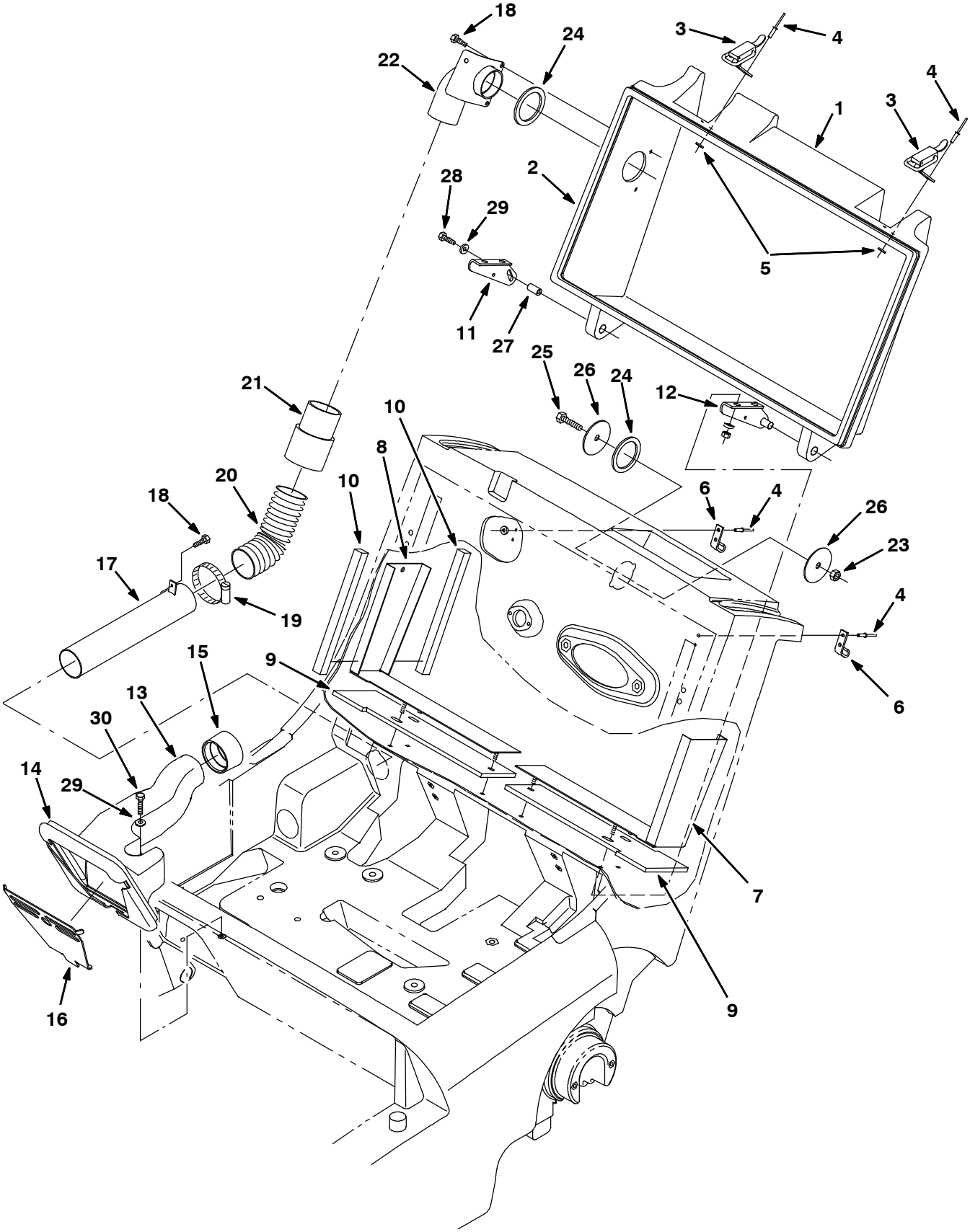

350862 - ALL

Fig. 9 - Vacuum Housing Group

Ref.	Part No.	Serial Number	Description	Qty.
1	373147	(000000-)	Kit, Replmt, Door, Filter	1
2	80373	(000000-)	Seal	1
3	23709	(000000-)	Catch, Draw Pull	2
4	80218	(000000-)	Rivet, Pop .196Dx.76X38Dhd	8
5	08793	(000000-)	Washer	8
6	80368	(000000-)	Clip, Latch	2
7	80971	(000000-)	Plate	1
8	80021	(000000-)	Bracket, Sealing, Rh	1
9	80052	(000000-)	Seal, Cover	2
10	80064	(000000-)	Seal, Foam .62 .62 8.0	4
11	379227	(000000-)	Bracket, Pivot	1
12	80011	(000000-)	Bracket, Pivot Lh	1
13	9005836	(000000-)	Duct, Vacuum, Hi- Flow, Afmkt [3640]	1
14	80096	(000000-)	Seal, Chamber	1
15	373116	(000000-)	Seal, Tube, Vacuum	1
16	80017	(000000-)	Screen, Vacuum Inlet	1
17	373123	(000000-)	Tube, Vacuum	1
18	20394	(000000-)	Screw, Hex, #10 X 0.62, Fmg Ab	4
19	22297	(000000-)	Clamp, Wormdrive	1
20	373118	(000000-)	Hose, Flex	1
21	83285	(000000-)	Cuff, Hose	1
22	373113	(000000-)	Coupling, Hose, Elbow	1
23	08709	(000000-)	Nut, Hex, Lock, M08- 1.25,Nl	1
24	80392	(000000-)	Gasket, Cuff	2
25	76570	(000000-)	Screw, Hex, M08- 1.25 X 30, 8.8	1
26	373117	(000000-)	Washer, Flat, 0.38b 2.25d .07, Stl, Pnt	2
27	379226	(000000-)	Pin, Tapped	1
28	06942	(000000-)	Screw, Hex M06	1
29	32490	(000000-)	Washer, Flat .25	2
30	06945	(000000-)	Screw, Hex, M6 X 1.0 X 30, 8.8	1

Fig. 10 - Vacuum Housing Group (Japan Market)

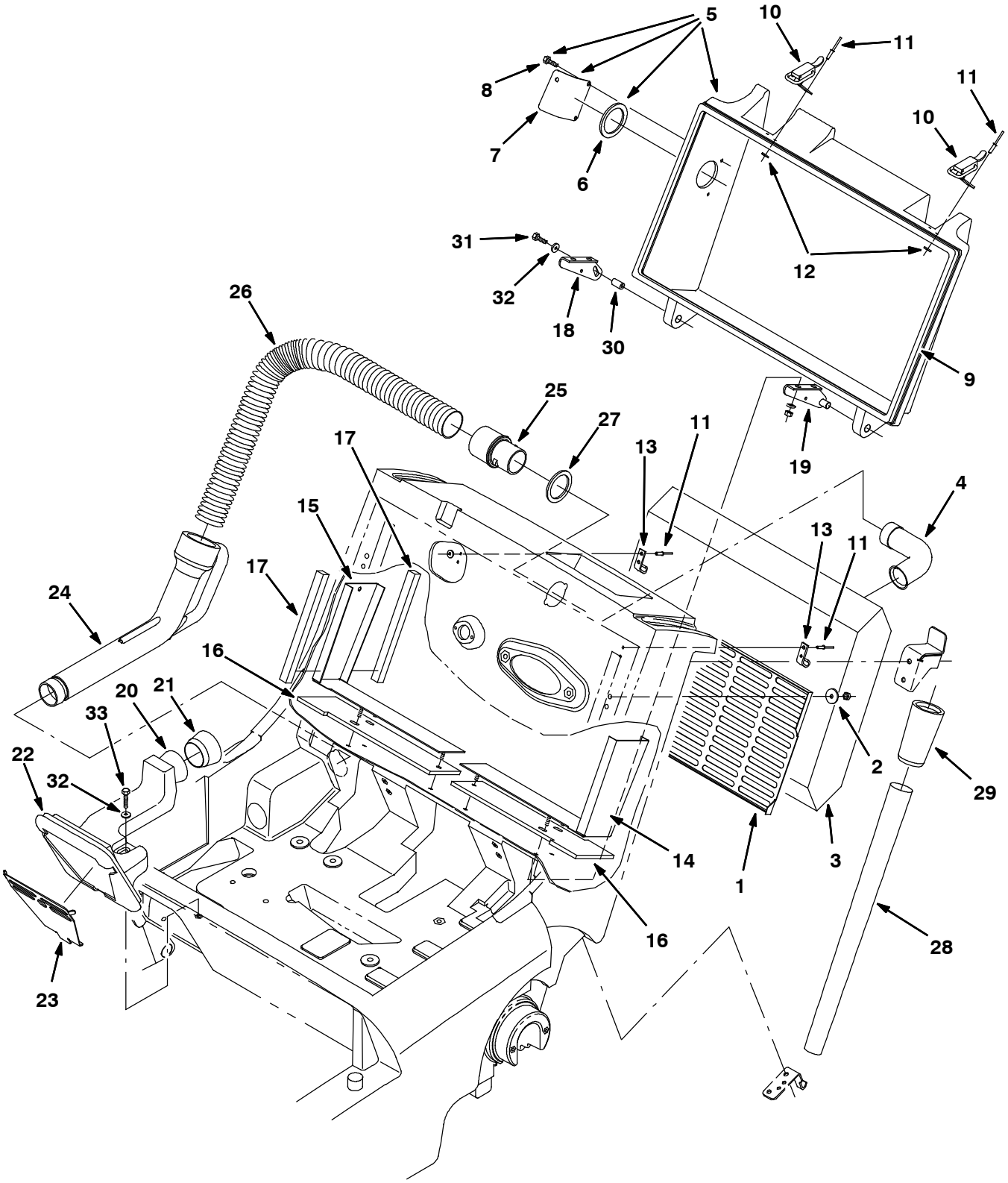

350862 - ALL

Fig. 10 - Vacuum Housing Group (Japan Market)

	Ref.	Part No.	Serial Number	Description	Qty.
	1	80103	(000000-)	Screen, Vacuum Bag	1
	2	41178	(000000-)	Washer, Flat, .25 Fender	2
	3	80432	(000000-)	Bag, Vacuum, Disposable 10PK	1
	4	80433	(000000-)	Tube, Vacuum	1
▽	5	373147	(000000-)	Kit, Replmt, Door, Filter	1
▲	6	80392	(000000-)	Gasket, Cuff	1
▲	7	373145	(000000-)	Cover, Hole	1
▲	8	20394	(000000-)	Screw, Hex #10	3
	9	80373	(000000-)	Seal	1
	10	23709	(000000-)	Catch, Draw Pull	2
	11	80218	(000000-)	Rivet, Pop .196Dx.76X38Dhd	8
	12	08793	(000000-)	Washer	8
	13	80368	(000000-)	Clip, Latch	2
	14	80971	(000000-)	Plate	1
	15	80021	(000000-)	Bracket, Sealing, Rh	1
	16	80052	(000000-)	Seal, Cover	2
	17	80064	(000000-)	Seal, Foam .62 .62 8.0	4
	18	379227	(000000-)	Bracket, Pivot	1
	19	80011	(000000-)	Bracket, Pivot Lh	1
	20	9005838	(000000-)	Housing, Vacuum, Afmkt [3640]	1
	21	373125	(000000-)	Seal, Vac Wand	1
	22	80096	(000000-)	Seal, Chamber	1
	23	80017	(000000-)	Screen, Vacuum Inlet	1
	24	9005837	(000000-)	Nozzle, Wand, Vacuum, 1.8od, Afmkt[3640]	1
	25	80270	(000000-)	Cuff, Flex	1
	26	80464	(000000-)	Hose, Flex	1
	27	80392	(000000-)	Gasket, Cuff	1
	28	190039	(000000-)	Tube, Extn, Blk [W- 500]	1
	29	80299	(000000-)	Coupling, Vac- Wand	1
	30	379226	(000000-)	Pin, Tapped	1
	31	06942	(000000-)	Screw, Hex, M06	1
	32	32490	(000000-)	Washer, Flat, .25	2
	33	06945	(000000-)	Screw, Hex, M6 X 1.0 X 30, 8.8	1

Fig. 11 - Panel Filter Group

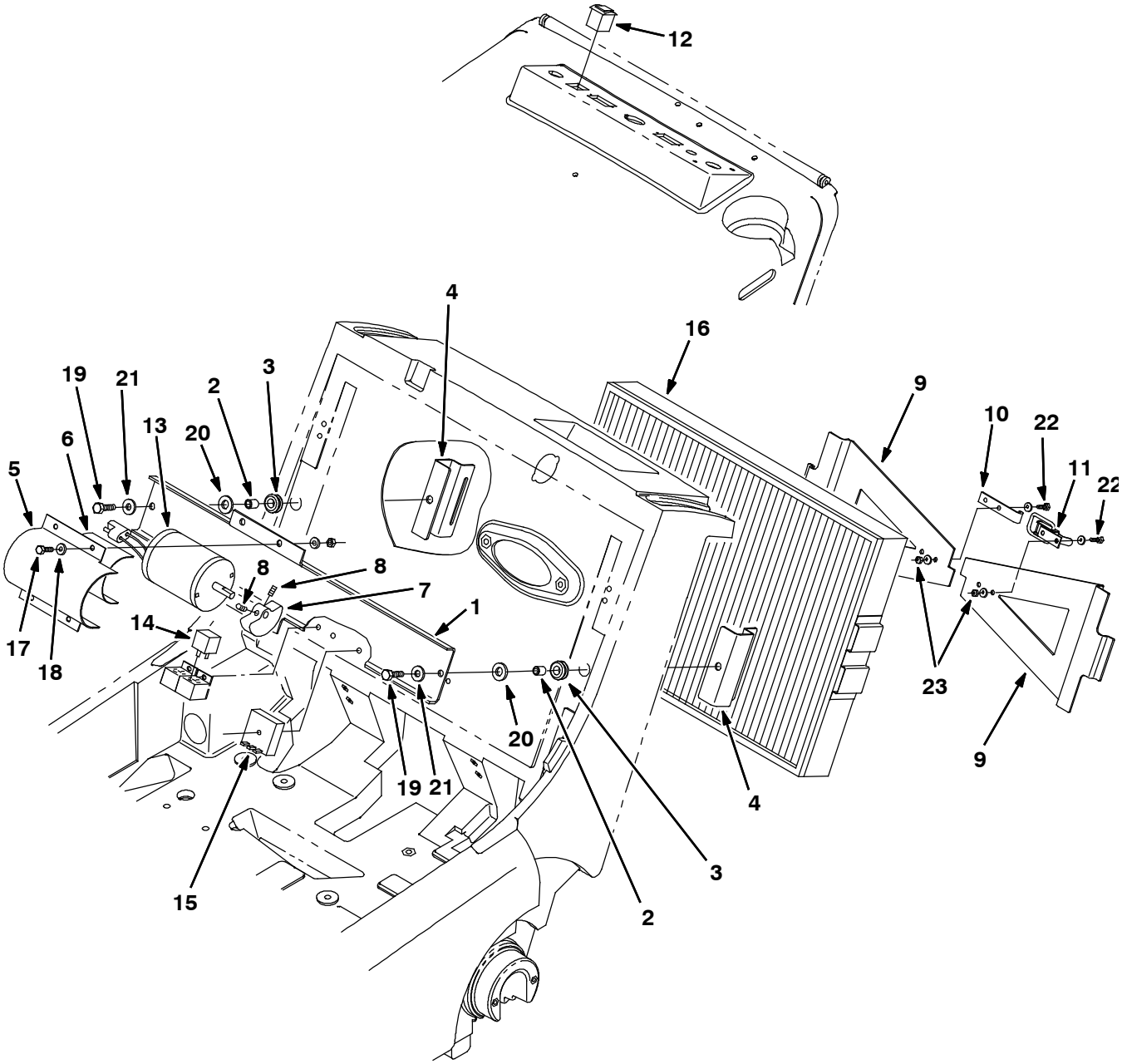

352792 - ALL

Fig. 11 - Panel Filter Group

	Ref.	Part No.	Serial Number	Description	Qty.
▽		80243	(000000-)	Filter Kit, Panl, 24vdc, Ci [6080/3640]	1
▲	1	80436	(000000-)	Bar, Shaker, Motor	1
▲	2	360930	(000000-)	Sleeve	2
▲	3	87515	(000000-)	Grommet, Rubber	2
▲	4	379218	(000000-)	Bracket, Shaker	2
▲	5	80437	(000000-)	Strap, Shaker Motor	1
▲	6	44893	(000000-)	Bar, Flat	1
▲	7	1053321	(000000-)	Weight, Eccentric, Pntd	1
▲	8	20634	(000000-)	Screw, Set, #10	2
▲	9	80033	(000000-)	Bracket, Retainer	2
▲	10	80107	(000000-)	Strike, Latch	1
▲	11	23709	(000000-)	Catch, Draw Pull	1
▲	12	80296	(000000-)	Switch, Rocker	1
▲	13	1059575	(000000-)	Motor, Ele, 24vdc 1440rpm 0.08hp 03.0a	1
▲	14	49309	(000000-)	Relay, 24V	1
▲	15	80328	(000000-)	Timer, 24V	1
▲	16	1037199	(000000-)	Filter, Panl, Dust, 2.7 X 15.0 X 22.0	1
▲	17	06942	(000000-)	Screw, Hex, M6 X 1.0 X 16, 8.8	4
▲	18	32490	(000000-)	Washer, Flat, 0.25 Std	4
▲	19	09023	(000000-)	Screw, Hex, M8 X 1.25 X 35, Ss, Fl	2
▲	20	32486	(000000-)	Washer, Flat, 0.50 Sae	2
▲	21	01685	(000000-)	Washer, Flat, 0.31 Ss	2
▲	22	12312	(000000-)	Screw, Hex, M5 X 0.8 X 12, 8.8	4
▲	23	06549	(000000-)	Nut, Hex, Lock, M5 X 0.8, Nl	4

Fig. 12 - Brush Lift Handles Group

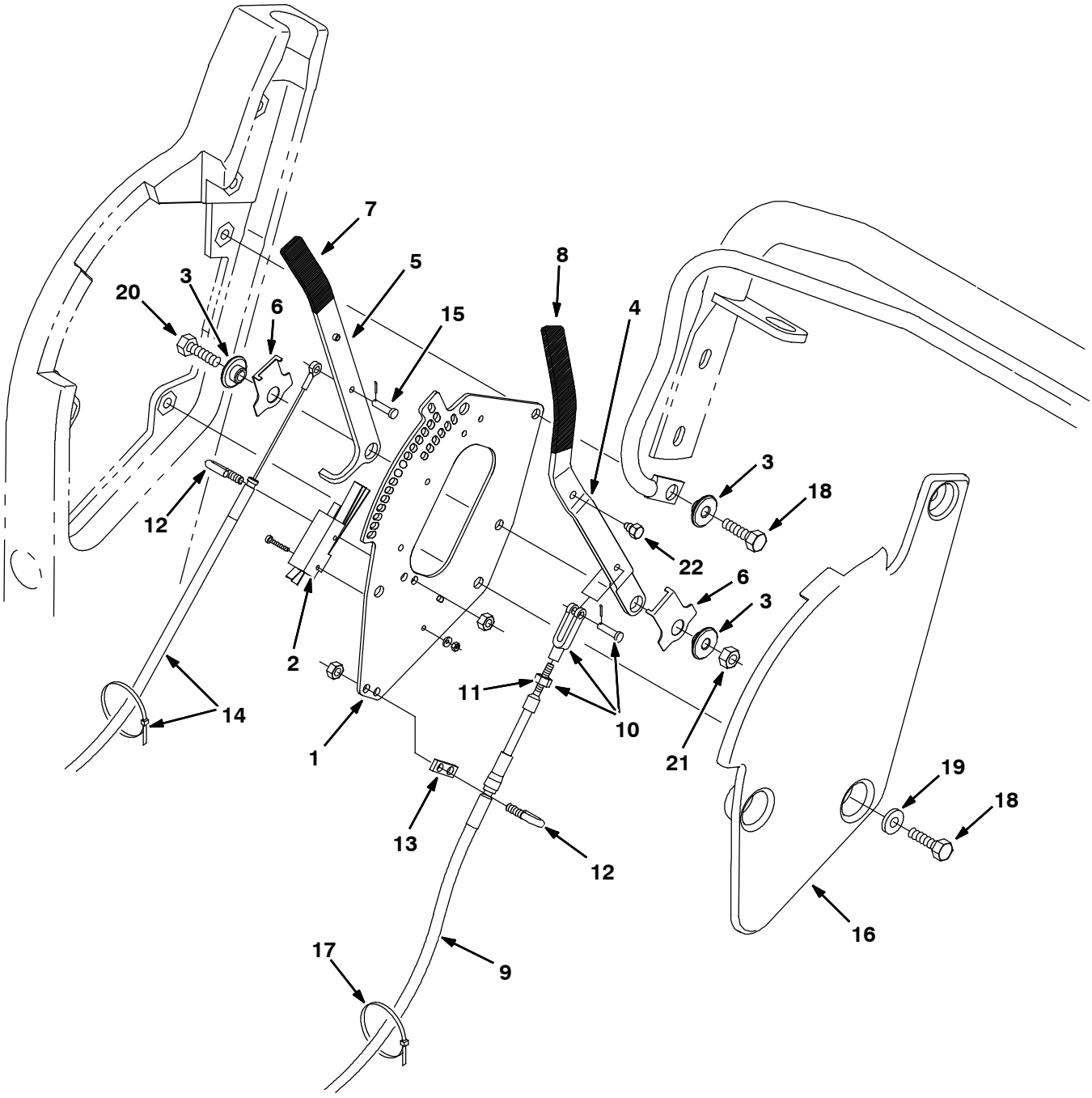

350866 - ALL

Fig. 12 - Brush Lift Handles Group

	Ref.	Part No.	Serial Number	Description	Qty.
	1	80411	(000000-)	Plate, Mounting Rh	1
	2	1008142	(000000-)	Switch, Snap Actn, 250vdc 25a Spdt	1
	3	80950	(000000-)	Bushing, Flanged	3
	4	379211	(000000-)	Handle, Lift, Main Brush	1
	5	379210	(000000-)	Handle, Lift, Side Brush	1
	6	80480	(000000-)	Spring, Detent	2
	7	80372	(000000-)	Grip, Vinyl .18X.75.2.00	1
	8	80979	(000000-)	Grip, Vinyl .18X .75X 5.00	1
	9	80190	(000000-)	Cable Assy, Main Brush	1
▽	10	27880	(000000-)	Yoke Assy.	1
▲	11	01713	(000000-)	Nut- Hx Std 10- 32 G2 Pltd	1
	12	80425	(000000-)	Bolt, Bent, M6	2
	13	80429	(000000-)	Support, Cable	1
	14	80302	(000000-)	Replacement Kit, Sidebrush Cable	1
	15	36376	(000000-)	Pin,Clevis, .19 Dia.X .50 Lg	1
	16	80414	(000000-)	Plate, Access, Rh	1
	17	49266	(000000-)	Tie, Cable 1.75D Max 7.50Lg	2
	18	12273	(000000-)	Screw, Hex, M8 X 1.25 X 20, Ss, Nl	4
	19	01685	(000000-)	Washer, Flat, 0.31 Ss	3
	20	76570	(000000-)	Screw, Hex, M8 X 1.25 X 30, 8.8	1
	21	08709	(000000-)	Nut, Hex, Lock, M8 X 1.25, Nl	1
	22	80972	(000000-)	Bolt, .25- 28, Mtg, Swp, Carpet [3640]	1

Fig. 13 - Clutch and Shift Handle Group

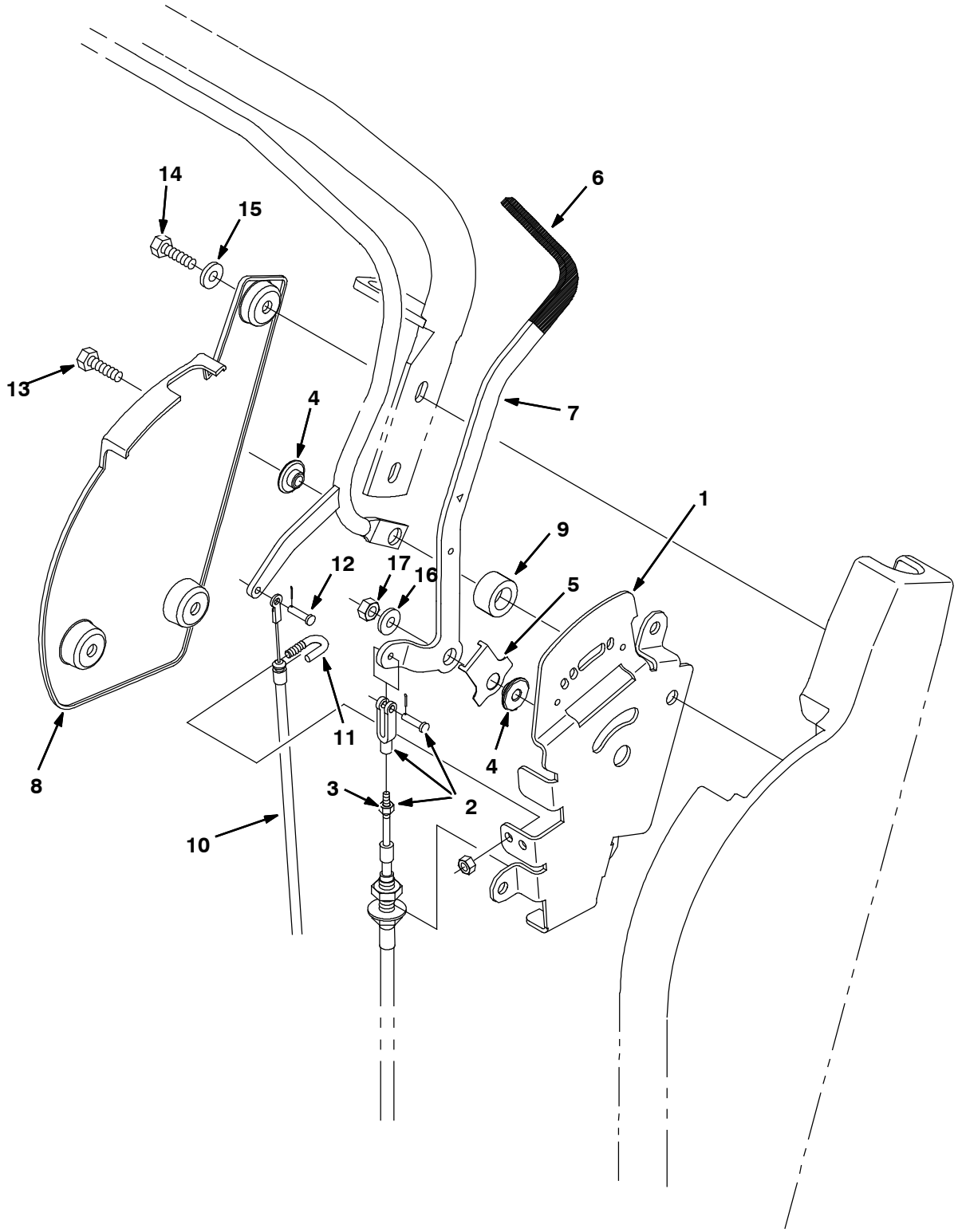

350864 - ALL

Fig. 13 - Clutch and Shift Handle Group

	Ref.	Part No.	Serial Number	Description	Qty.
	1	80428	(000000-)	Plate, Pivot, Lh	1
▽	2	80184	(000000-)	Yoke Assy, 10- 32	1
▲	3	01713	(000000-)	Nut- Hx Std 10- 32 G2 Pltd	1
	4	80950	(000000-)	Bushing, Flanged	2
	5	80480	(000000-)	Spring, Detent	1
	6	80979	(000000-)	Grip, Vinyl .18X .75X 5.00	1
	7	80927	(000000-)	Handle, Shift	1
	8	80589	(000000-)	Plate, Access, Lh	1
	9	80496	(000000-)	Spacer, Pivot .62Lg	1
	10	80192	(000000-)	Cable, Pull Cl	1
	11	80425	(000000-)	Bolt, Bent, M6	1
	12	36376	(000000-)	Pin,Clevis, .19 Dia.X .50 Lg	1
	13	12333	(000000-)	Screw, Hex, M8 X 1.25 X 25, Ss, Nl	1
	14	12273	(000000-)	Screw, Hex, M8 X 1.25 X 20, Ss, Nl	3
	15	01685	(000000-)	Washer, Flat, 0.31 Ss	3
	16	32490	(000000-)	Washer, Flat, 0.25 Std	1
	17	08709	(000000-)	Nut, Hex, Lock, M8 X 1.25, Nl	1

Fig. 14 - Electric Motor Group

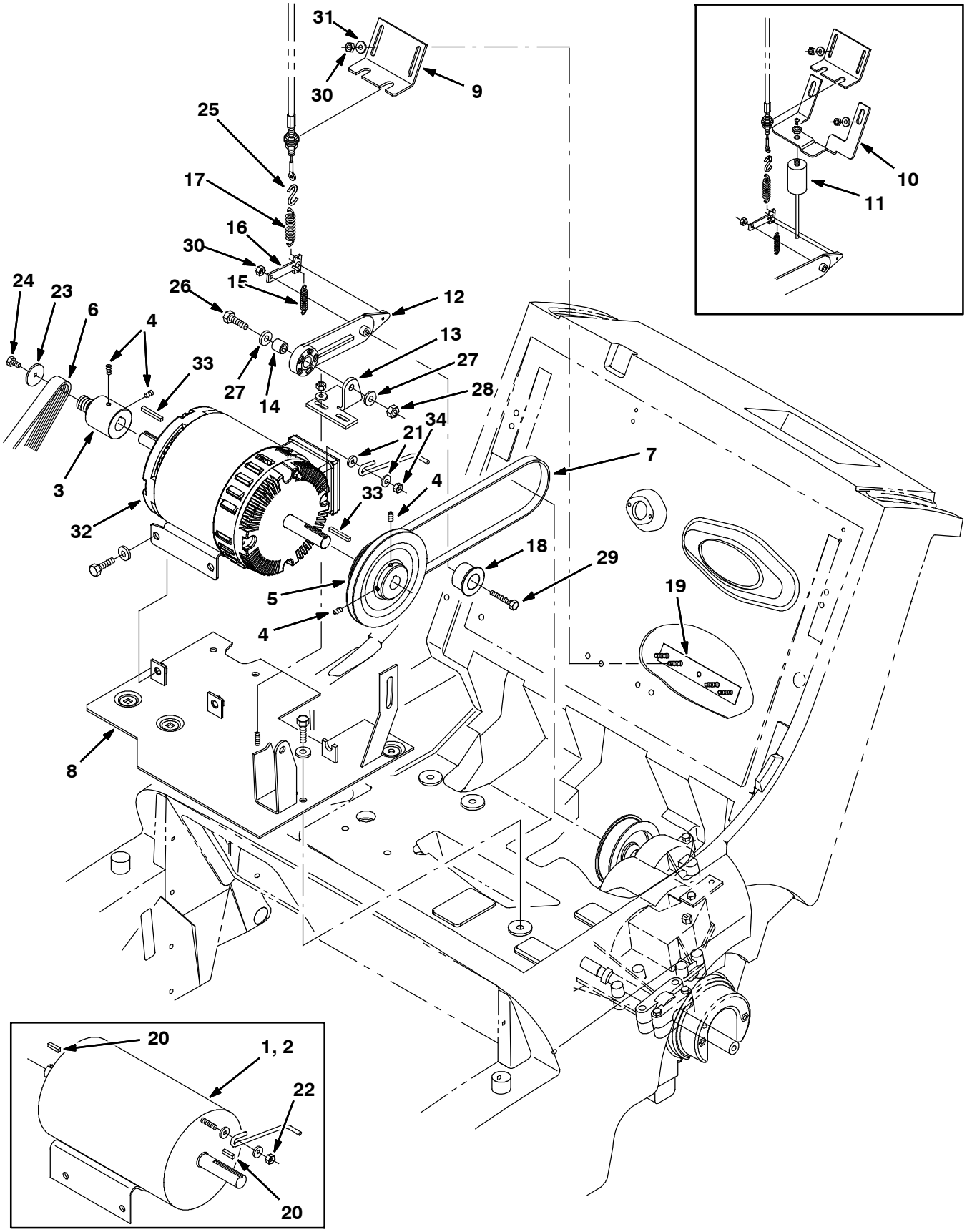

350868 - E

Fig. 14 - Electric Motor Group

	Ref.	Part No.	Serial Number	Description	Qty.
▽	1	377431	(000000- 10566878)	Motor, Ele, 24vdc 1.00hp 1750rpm 42.0a (Replaced by 1068526)	1
▲		01739	(000000-)	Brush Kit - 4 Brushes Included	1
▲		01740	(000000-)	Brush Spring (1 Only)	4
▽	2	377406	(000000- 10704457)	Motor, Ele, 24vdc 1.00hp 1750rpm 46.0a (EE Model) (Replaced by 1068525)	1
▲		01739	(000000-)	Brush Kit - 4 Brushes Included	1
▲		01740	(000000-)	Brush Spring (1 Only)	4
	3	373139	(000000-)	Pulley, Drive	1
	4	09162	(000000-)	Scr- Set M 6X1.0 8 Nylonloc	4
	5	80242	(000000-)	Sheave, 3L 2Gr 3.2Pd 5.5Pd	1
▽		80117	(000000-)	Belt Kit, Main Brush, Replmt[6080/3640e]	1
▲	6	80139	(000000-)	Belt, Ribbed, 36.0l [J8]	1
	7	80152	(000000-)	Belt, Flat .75Wide X 33.0 Circ	1
	8	80357	(000000-)	Plate Wldt, Floor, Elec	1
	9	80407	(000000-)	Bracket, Cable, Clutch	1
	10	80065	(000000- xxxxxx)	Bracket, Mounting, Dampener, E (Replaced by None)	1
	11	80959	(000000- xxxxxx)	Dampener, Push, 15Lbs (Replaced by None)	1
	12	80405	(000000-)	Arm, Clutch Pivot	1
	13	80406	(000000-)	Bracket, Clutch Pivot	1
	14	80409	(000000-)	Sleeve, .344B .62D .58	1
	15	378769	(000000-)	Sprng,Tens, .36Od .03Wire 1.5L	1
	16	80319	(000000-)	Bar, Clutch	1
	17	75575	(000000-)	Spring, Tens,0.5Dx.06Wire 2.5L	1
	18	80079	(000000-)	Pulley, Idler	1
	19	80408	(000000-)	Plate, Cable, Clutch	1
	20	00915	(000000- 10566878)	Key, Square .18x .18x 1.38	2
	21	80322	(000000-)	Brake, Belt, Elec	1
	22	75934	(000000- 10566878)	Nut, Hex, Lock, .25- 20, Nl	1
	23	41178	(000000-)	Washer, Flat, Fender	1
	24	06941	(000000-)	Scr, Hex, M6	1
	25	43363	(000000-)	S- Hook	1
	26	06955	(000000-)	Screw, Hex, M8 X 1.25 X 35, 8.8	1
	27	32491	(000000-)	Washer, Flat, 0.31 Std	2
	28	08709	(000000-)	Nut, Hex, Lock, M8 X 1.25, Nl	1
	29	06946	(000000-)	Screw, Hex, M6 X 1.0 X 35, 8.8	1
	30	08708	(000000-)	Nut, Hex, Lock, M6 X 1.0, Nl	3
	31	32490	(000000-)	Washer, Flat, 0.25 Std	2
▽	32	1068526	(10566879-)	Motor Kit, Ele, 24vdc 1750rpm 1.00hp	1
		1059370	(10566879-)	Brush, Motor, Replmt [Bag Of 4)	1
▽	32	1068525	(10704458-)	Motor Kit, Ele, 24vdc 1750rpm 1.00hp (EE Model)	1
		1059370	(10704458-)	Brush, Motor, Replmt [Bag Of 4)	1
▲	33	00916	(10566879-)	Key, Sq, 0.19 X 0.19, 1.50l	2
▲	34	08708	(10566879-)	Nut, Hex, Lock, M6 X 1.00, Nl	1

Fig. 15 - Battery Cover Group

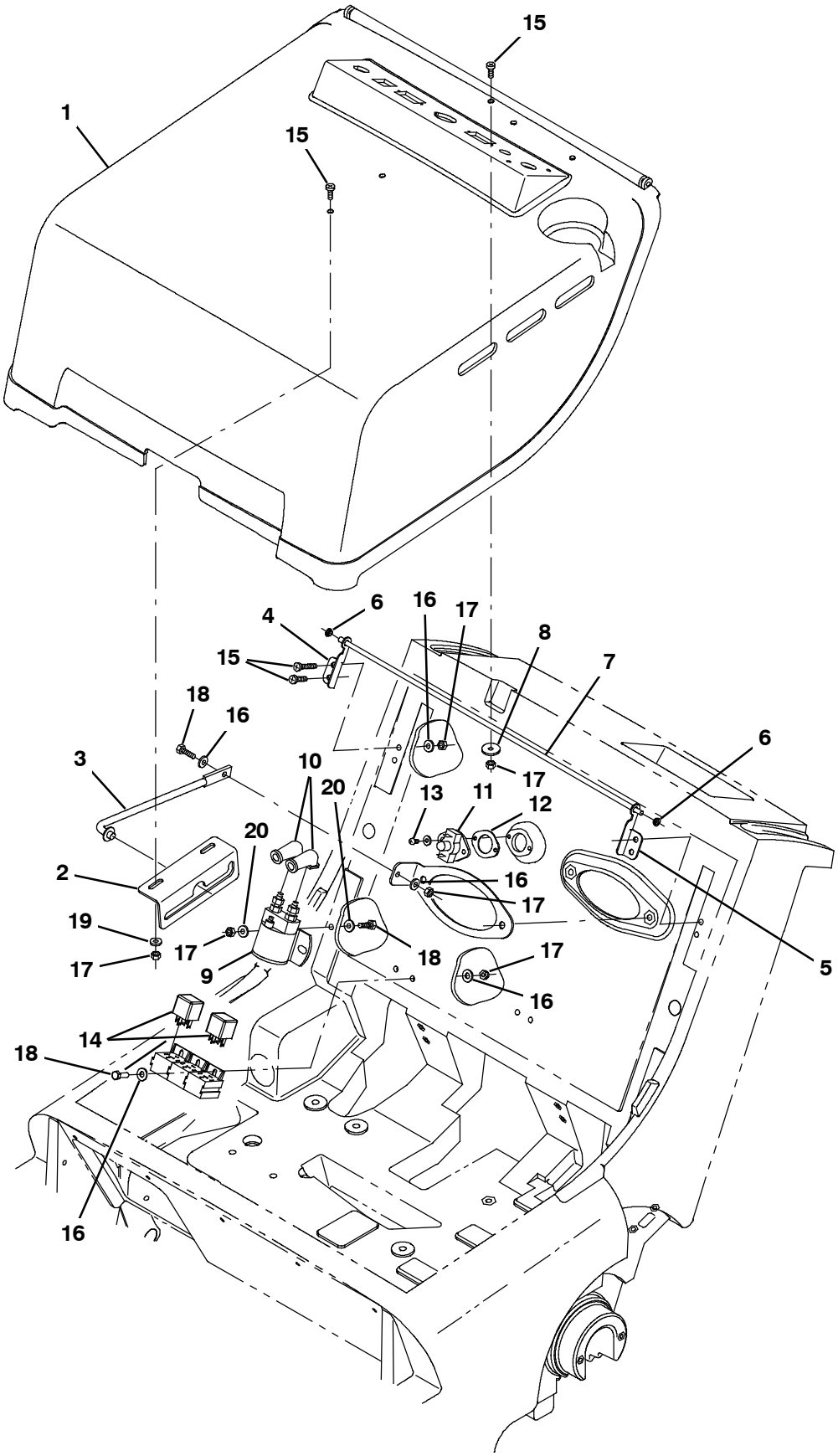

350872 - E

Fig. 15 - Battery Cover Group

Ref.	Part No.	Serial Number	Description	Qty.
1	80195	(000000-)	Cover, Battery, Complt, W/ Label	1
1	80204	(000000-)	Cover, Battery, Compartment, W/ Label TJ (Japan)	1
2	80364	(000000-)	Bracket, Rod, Propel	1
3	54615	(000000-)	Rod, Seat	1
4	80949	(000000-)	Pivot, Hinge, Eng Cover, Rh,E	1
5	80837	(000000-)	Pivot, Hinge, Eng Cover, Left	1
6	80921	(000000-)	Bearing, Snap- In, .250 Bore	2
7	80924	(000000-)	Rod, Hinge Pin, Nylon	1
8	41178	(000000-)	Washer, Flat, 0.25 Fender	1
9	02424	(000000-)	Contactor, 24Volt Dc	1
10	02076	(000000-)	Boot, 90 Deg .50D .57X .84	2
11	02712	(000000-)	Thermostat Assembly,140 Deg	1
12	82733	(000000-)	Gasket, Fire Switch	1
13	49162	(000000-)	Screw- Pan 08- 10X.050	2
14	49309	(000000-)	Relay, 24V Dc Spdt	2
15	09164	(000000-)	Screw, Pan, M6 X 1.0 X 20, 4.8	7
16	32483	(000000-)	Washer, Flat, 0.25 Sae	10
17	08708	(000000-)	Nut, Hex, Lock, M6 X 1.0, Nl	12
18	06943	(000000-)	Screw, Hex, M6 X 1.0 X 20, 8.8	5
19	01684	(000000-)	Washer, Flat, 0.25 Ss	2
20	32490	(000000-)	Washer, Flat, 0.25 Std	4

Fig. 16 - EE Battery Cover And Circuit Breaker Group

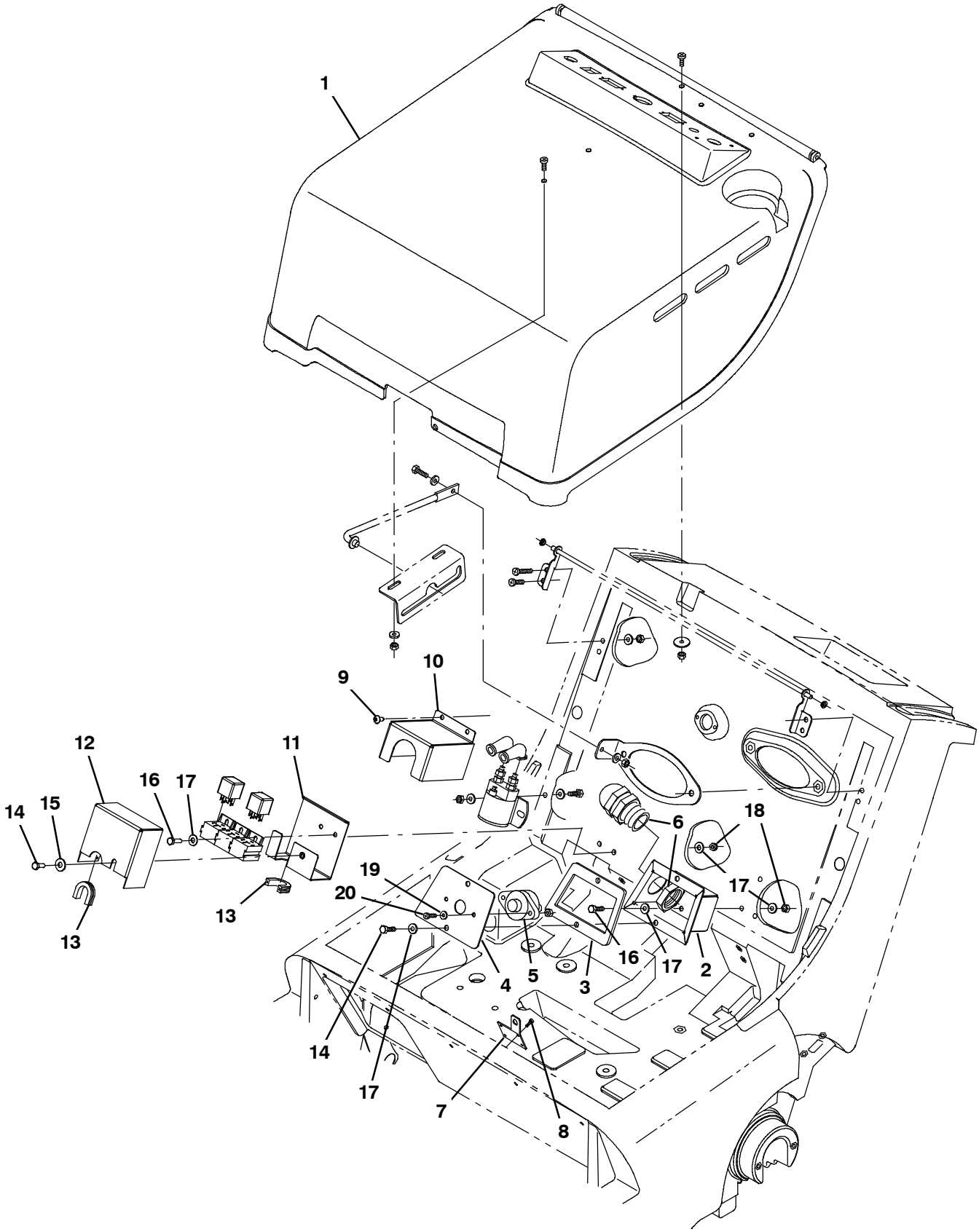

350943 - EE

Fig. 16 - EE Battery Cover And Circuit Breaker Group

Ref.	Part No.	Serial Number	Description	Qty.
1	80196	(000000-)	Hood, Ee w/Labels	1
2	80245	(000000-)	Box, Circuit Breaker, Ee	1
3	80247	(000000-)	Gasket, Box, Circuit Breaker	1
4	80248	(000000-)	Plate, Cover, Box, Ee	1
5	375118	(000000-)	Circuitbreaker, 40 Resetable	1
6	222726	(000000-)	Strain Relief, .72/.97Cord	1
7	80273	(000000-)	Plate, Lock, Ee	1
8	222267	(000000-)	Screw, Pan, Fmg, #06 X 0.50	4
9	1009324	(000000-)	Screw, Pan, Phl, 10- 16 X 0.50,Blk[Typ17]	2
10	1054932	(000000-)	Contactor, Enclosure [3640]	1
11	1045300	(000000-)	Base, Cover, Relay [3640 Ee, Ul]	1
12	1045299	(000000-)	Cover, Relay [3640 Ee, Ul]	1
13	10632- 2	(000000-)	Grommet, Rbr, 0.62id, F/0.9h, .12 Matl	2
14	06942	(000000-)	Screw, Hex, M6 X 1.0 X 16, 8.8	3
15	32490	(000000-)	Washer, Flat, 0.25, Std	1
16	06943	(000000-)	Screw, Hex, M6 X 1.0 X 20, 8.8	4
17	32483	(000000-)	Washer, Flat, 0.25, Sae	10
18	08708	(000000-)	Nut, Hex, Lock, M6 X 1.00, Nl	4
19	06933	(000000-)	Screw, Pan, M5 X 0.80 X 16, 4.8	2
20	01683	(000000-)	Washer, Flat, 0.22b 0.50d .05, Ss [#10]	2

Fig. 17 - Battery Cable Harness Group

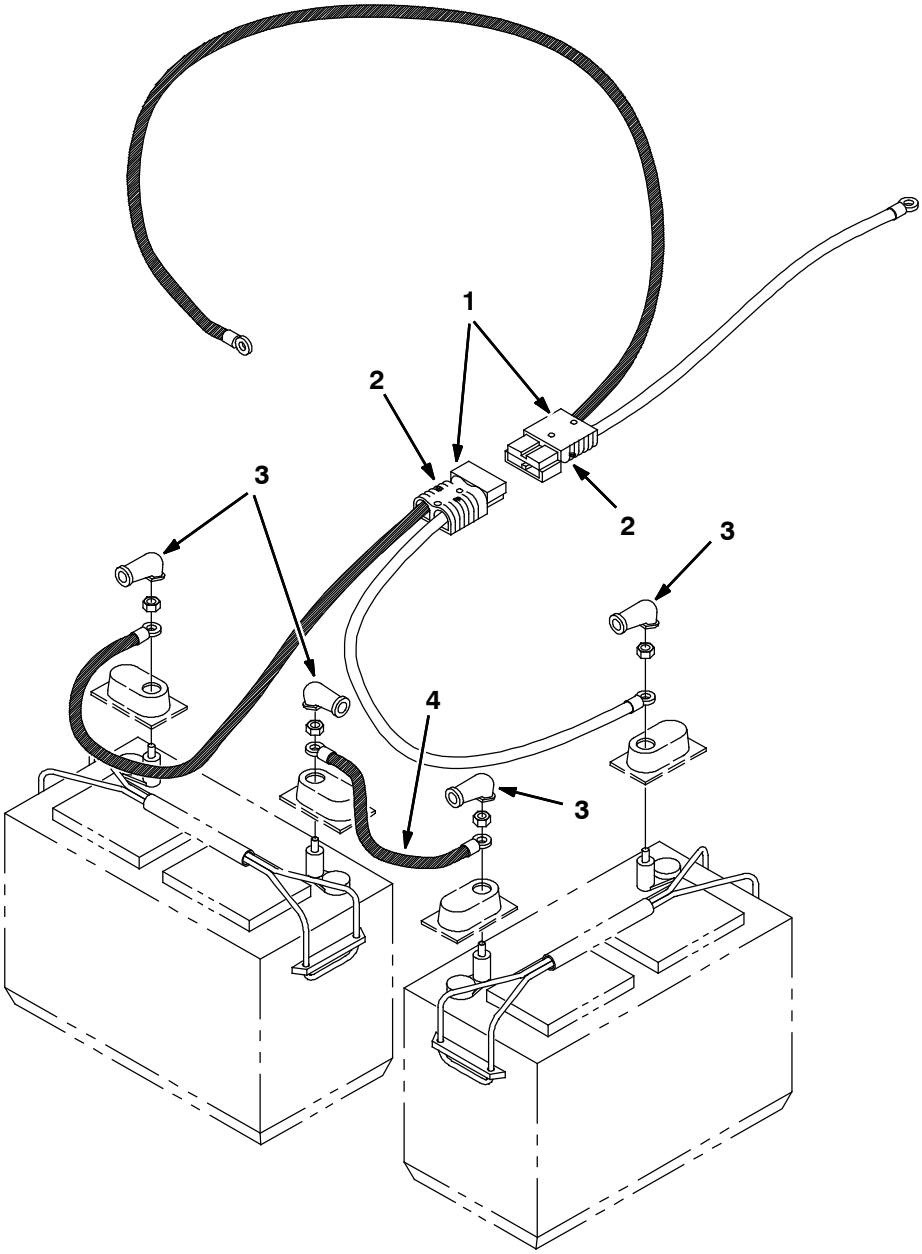

350876 - E

	Ref.	Part No.	Serial Number	Description	Qty.
▽	1	49443	(000000-)	Harness, Cable, Battery	2
▲	2	49548	(000000-)	Connector, [Anderson], 50a, Red	1
	3	02076	(000000-)	Boot, 90deg .50d .57d X .84	4
	4	63735	(000000-)	Wire, 06ga 11.0l Blk .38ring /.38ring	1

Fig. 18 - Instrument Panel Group

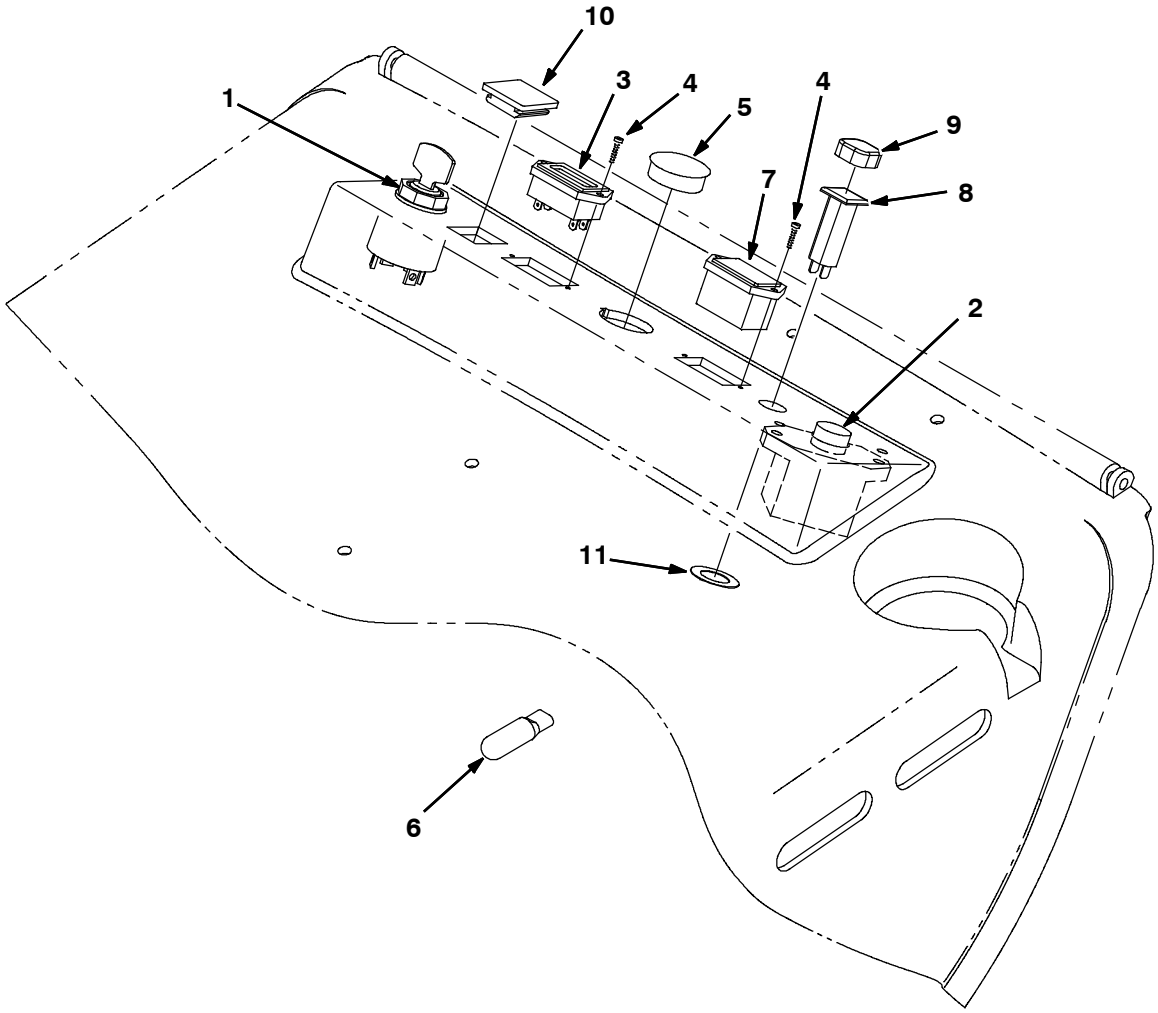

350880 - E

	Ref.	Part No.	Serial Number	Description	Qty.
▽	1	80331	(000000-)	Switch, Key	1
▲		80181	(000000-)	Key Set Rn	1
	2	375119	(000000-)	Circuitbreaker, 50.0a [Resetable]	1
	3	80327	(000000-)	Meter, Discharge, Battery	1
	4	222267	(000000-)	Screw, Pnfmg 6X.50 Type Ab	4
	5	76888	(000000-)	Plugbtn 1.25H.12 Max Blacknyl	1
	6	222290	(000000-)	Diode, Elec, Plug	1
	7	377433	(000000-)	Gauge, Hourmeter, 12- 60vdc, Analog [10k]	1
	8	1064188	(10511016-)	Circuitbreaker, 15.0a, Resetable	1
	8	1045858	(000000- 10511015)	Circuitbreaker, 15a, Resetable (Rpld by 9004588)	1
	9	1064191	(10511016-)	Boot, Circuitbreaker	1
	9	1046173	(000000- 10511015)	Boot, Circuitbreaker (Rpld by 1064191)	1
	10	80277	(000000-)	Plug, Switch	1
	11	1064190	(10511016-)	Washer, Lock, Int, 0.60, Stl	1
	11	1046176	(000000- 10511015)	Ring, Retaining, Circuitbreaker (Rpld by 1064190)	1

Fig. 19 - EE Instrument Panel Group

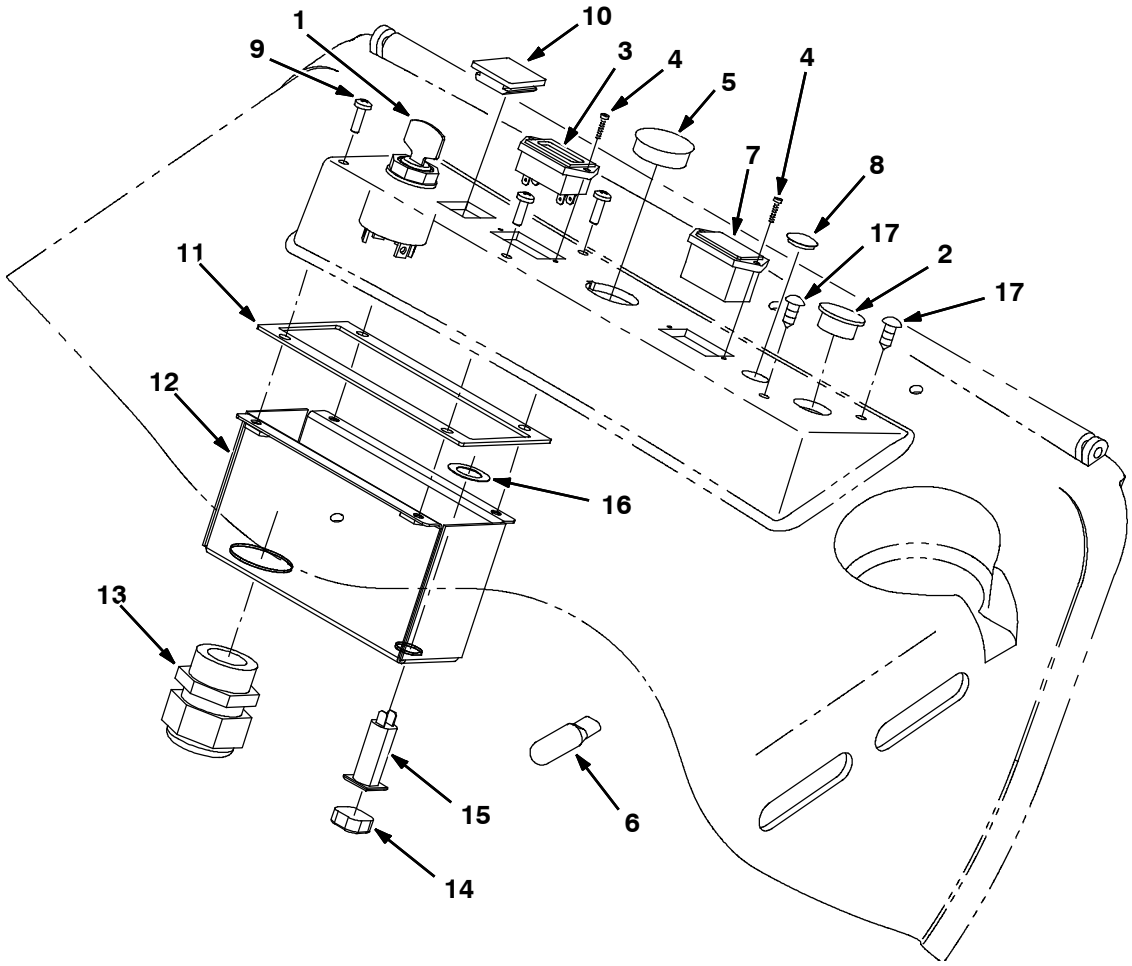

350880 - EE

	Ref.	Part No.	Serial Number	Description	Qty.
▽	1	80331	(000000-)	Switch, Key	1
▲		80181	(000000-)	Key Set Rn	1
	2	130161	(000000-)	Plug, Hole, Rnd, 0.88d, Blk	1
	3	80327	(000000-)	Meter, Discharge, Battery	1
	4	222267	(000000-)	Screw, Pnfmg 6X.50 Type Ab	4
	5	76888	(000000-)	Plugbtn 1.25H.12 Max Blacknyl	1
	6	222290	(000000-)	Diode, Elec, Plug	1
	7	377433	(000000-)	Gauge, Hourmeter, 12- 60vdc, Analog [10k]	1
	8	57167	(10417526-)	Plug, Hole, Rnd, 0.62h .03- .12, Blk Nyl	1
	9	06933	(10417526-)	Screw, Pan, Phl, M5 X 0.80 X 16, 4.8	4
	10	80277	(000000-)	Plug, Switch	1
	11	1056107	(10417526-)	Gasket, Cover [3640ee]	1
	12	1055423	(10417526-)	Enclosure, Switch [3640 Ee]	1
	13	222726	(10417526-)	Strainrelief, .72/.97cord, 1.47d	1
	14	1064191	(10511016-)	Boot, Circuitbreaker	1
	14	1046173	(10417526- 10511015)	Boot, Circuitbreaker (Rpld by 1064191)	1
	15	1064188	(10511016-)	Circuitbreaker, 15.0a, Resetable	1
	15	1045858	(10417526- 10511015)	Circuitbreaker, 15a, Resetable (Rpld by 9004588)	1
	16	1064190	(10511016-)	Washer, Lock, Int, 0.60, Stl	1
	16	1046176	(10417526- 10511015)	Ring, Retaining, Circuitbreaker (Rpld by 1064190)	1
	17	77399	(000000-)	Plug, Hole	2

Fig. 20 - Electrical Schematic

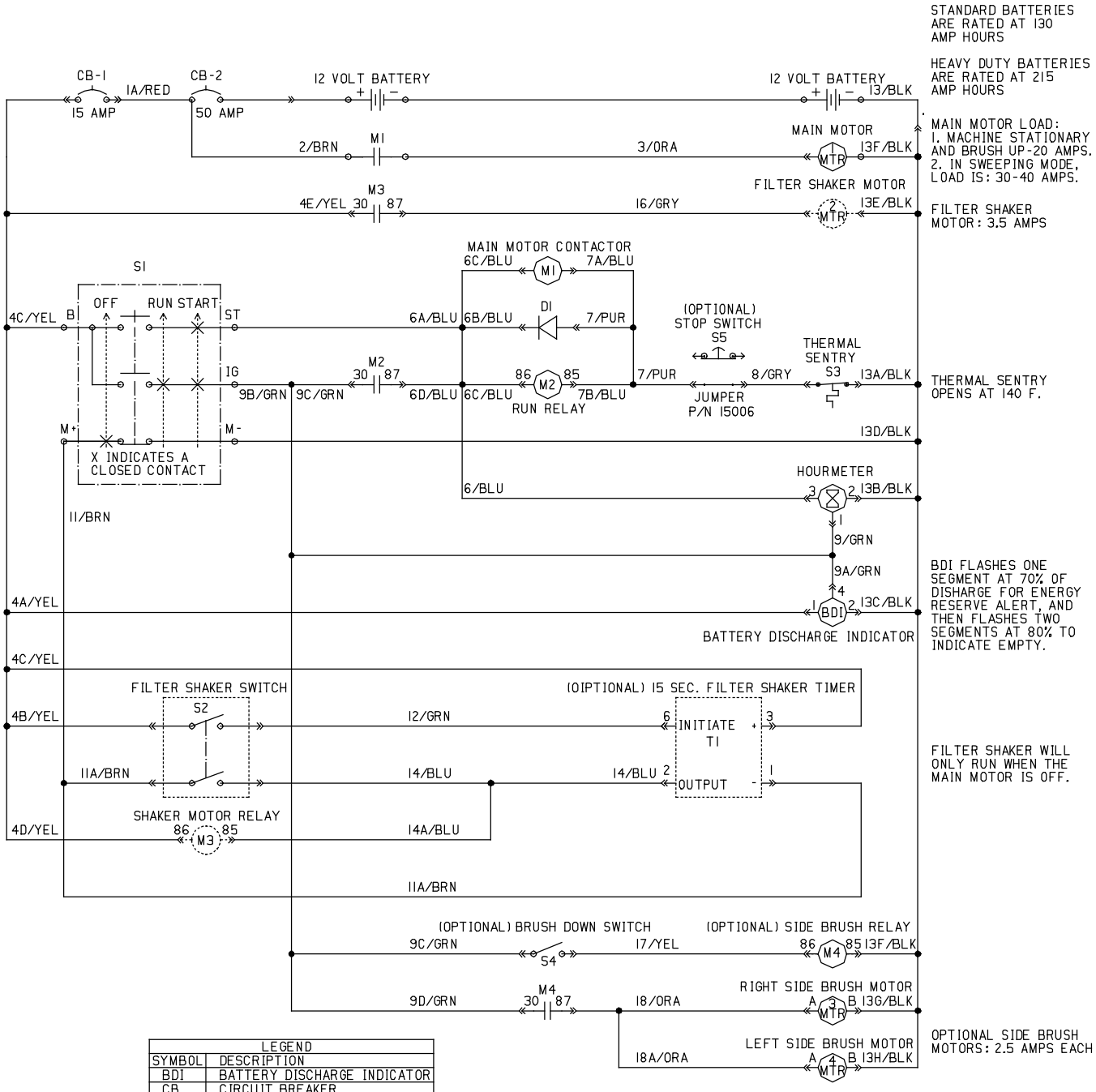

LEGEND	
SYMBOL	DESCRIPTION
BDI	BATTERY DISCHARGE INDICATOR
CB	CIRCUIT BREAKER
D	DIODE
M	RELAY OR CONTACTOR
MTR	MOTOR
S	SWITCH
T	TIMER

350889 - E

Fig. 21 - Wire Harness Group (S/N 000000 - 10983965)

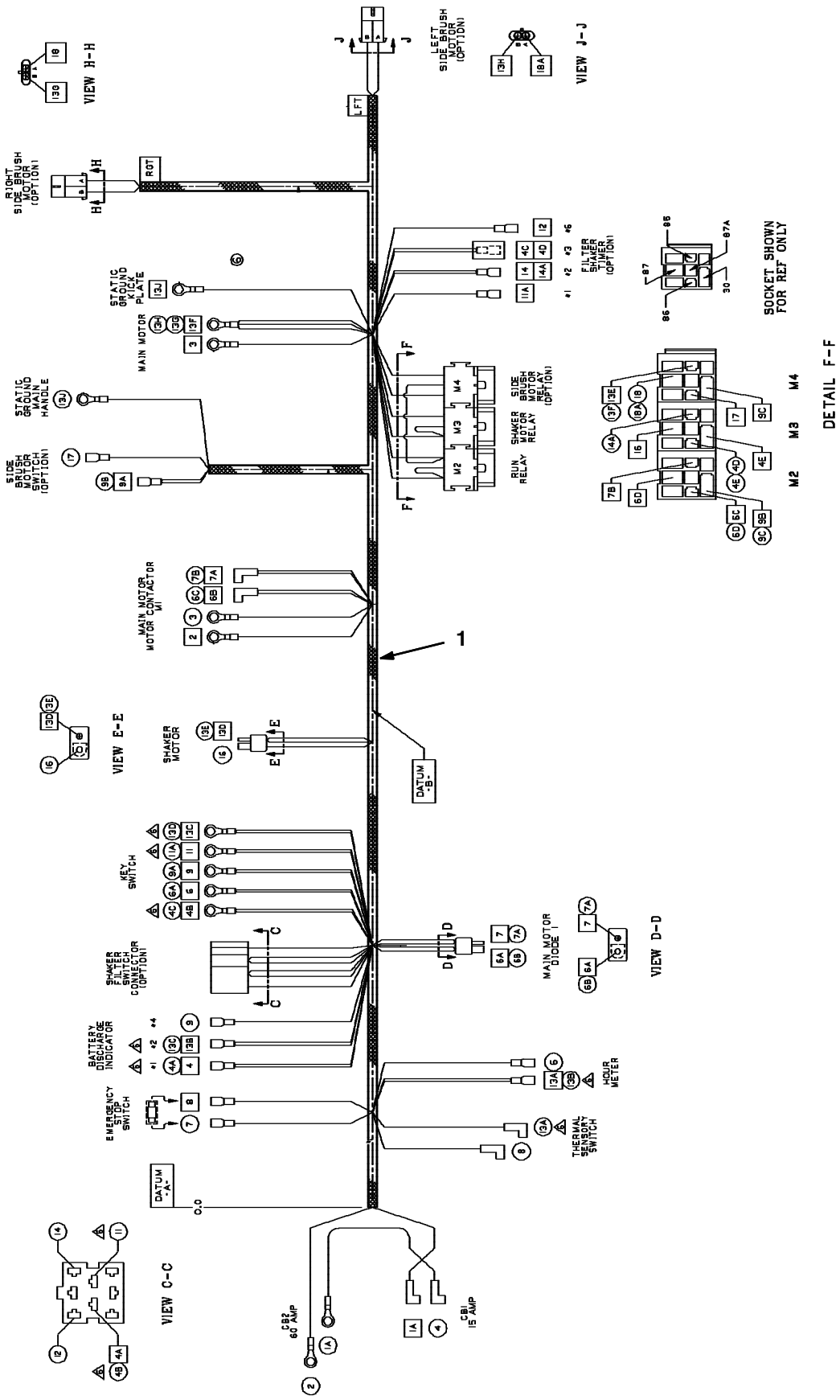

Fig. 21 - Wire Harness Group (S/N 10983966 -)

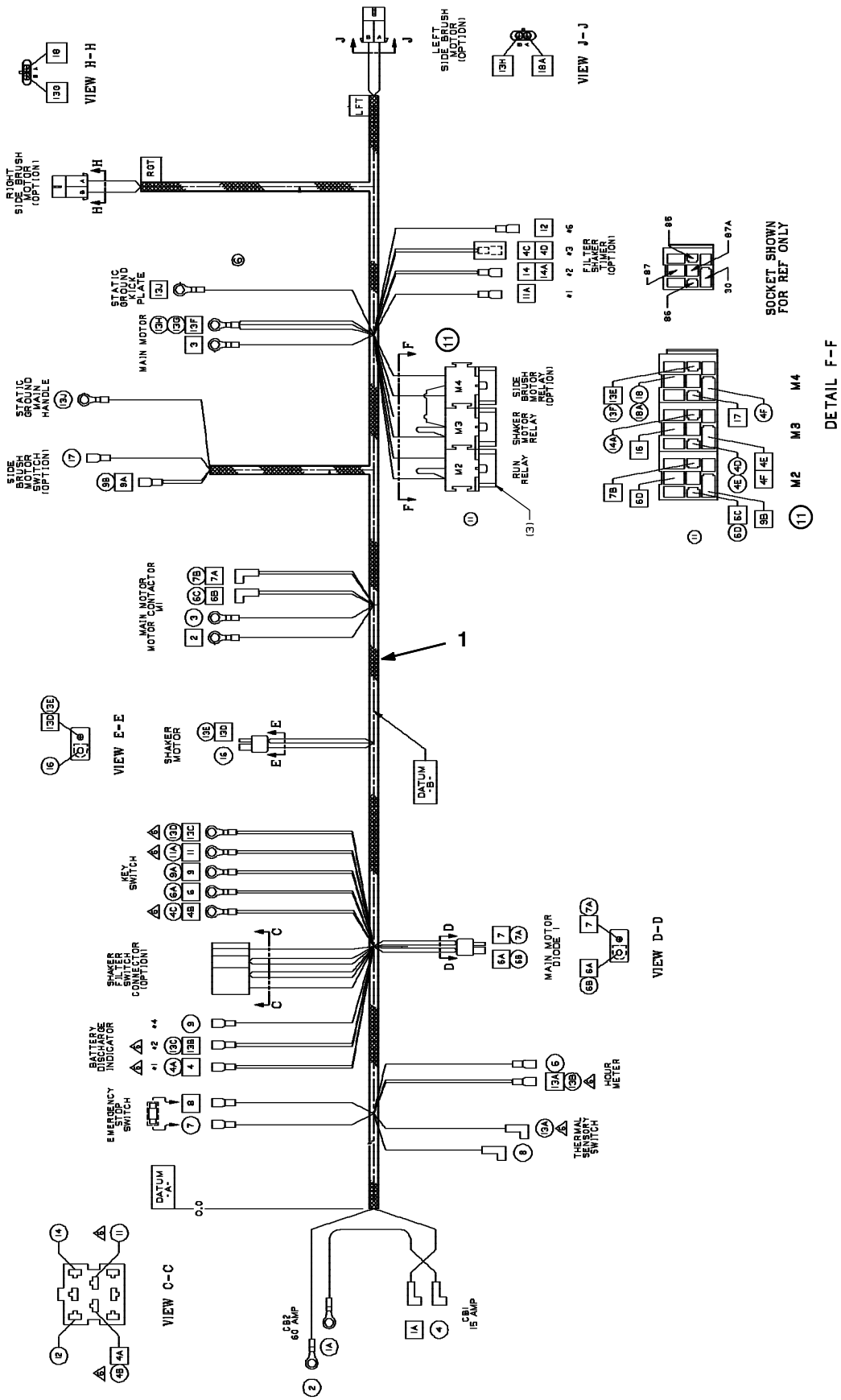

80602_11

Fig. 21 - Wire Harness Group, EE (S/N 000000 - 10417525)

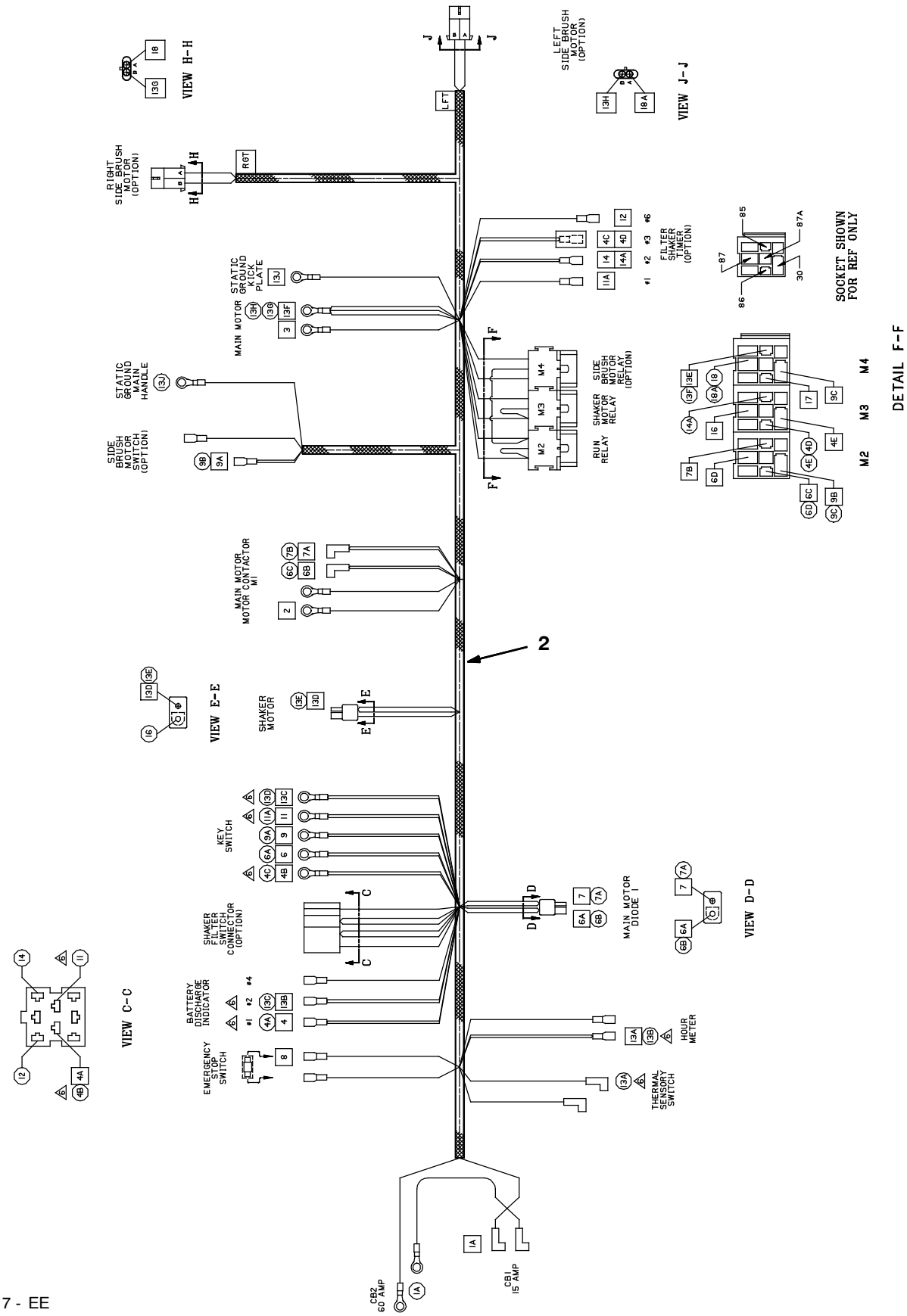

351317 - EE

Fig. 21 - Wire Harness Group, EE (S/N 10417526- 10983965)

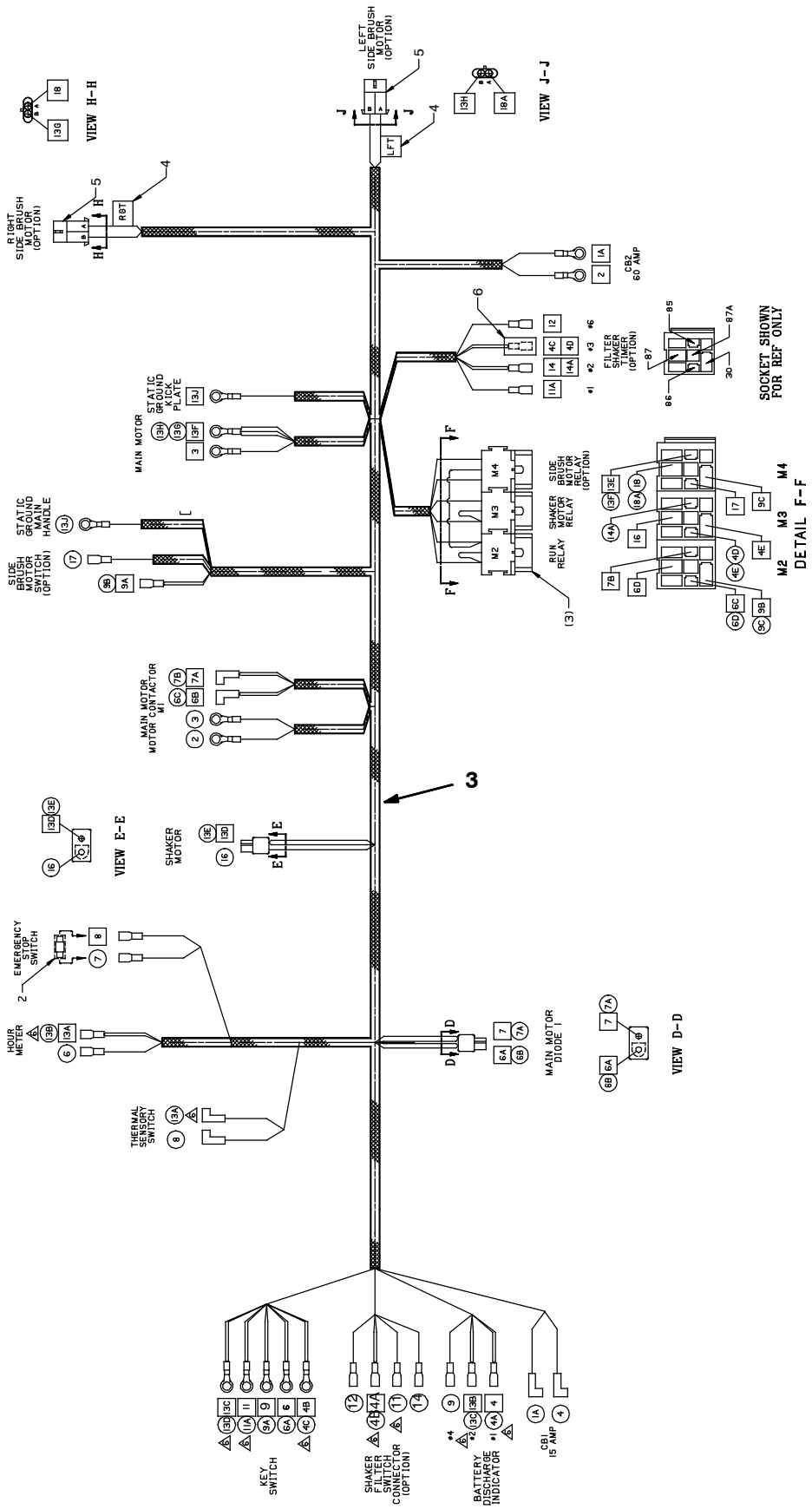

1055961_03

Fig. 21 - Wire Harness Group, EE (S/N 10983966 -)

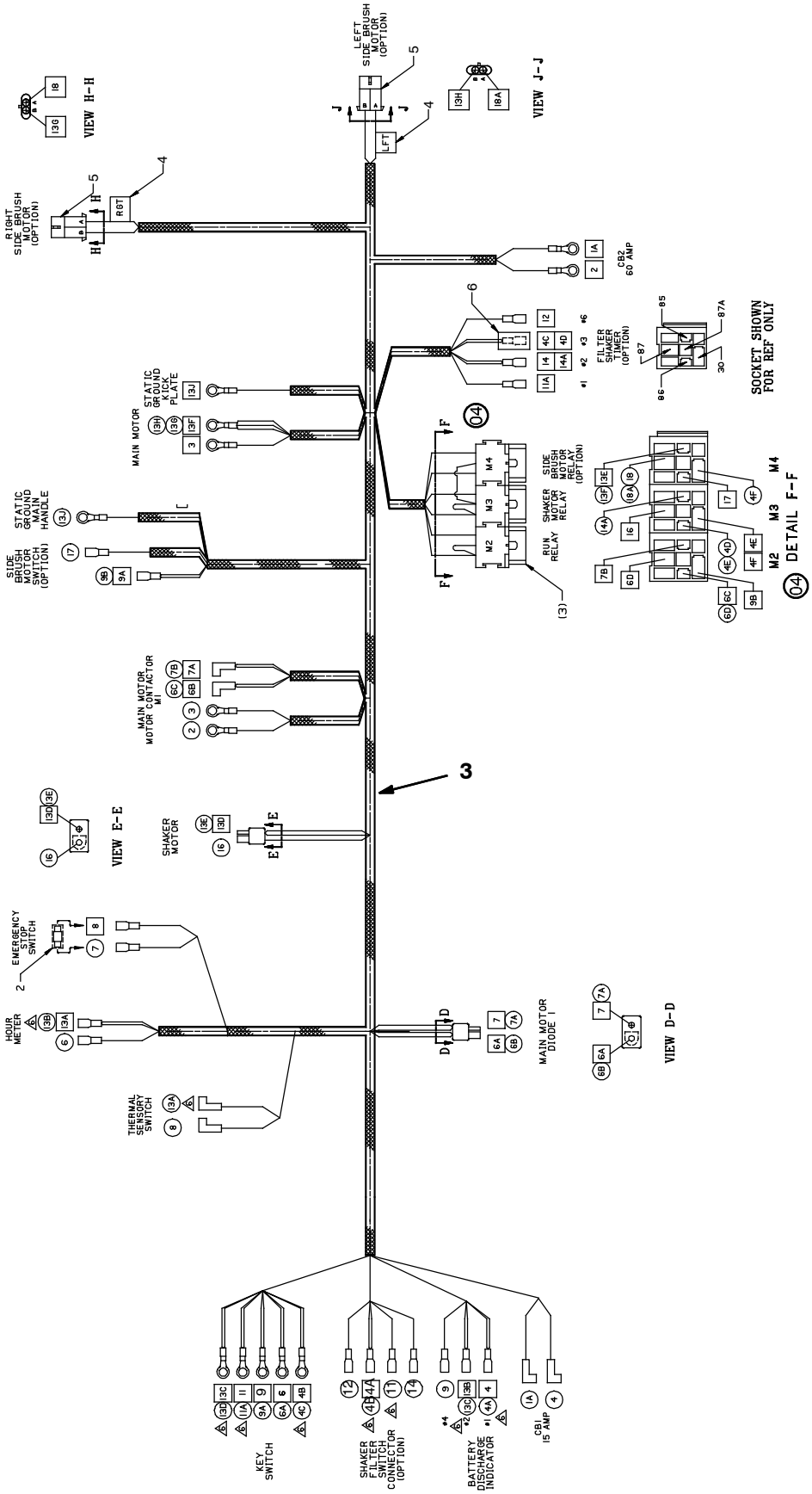

1055961_04

Fig. 21 - Wire Harness Group

351320, 351317 - E, EE

Ref.	Part No.	Serial Number	Description	Qty.
1	80602	(000000- 10983965)	Harness, Wire, Main E	1
1	80602	(10983966-)	Harness, Wire, Main E	1
2	80229	(000000- 10417525)	Harness, Wire, Main EE	1
3	1055961	(10417526- 10983965)	Harness, Main, Ee [3640 Ee]	1
3	1055961	(10983966-)	Harness, Main, Ee [3640 Ee]	1

Fig. 22 - Label Group

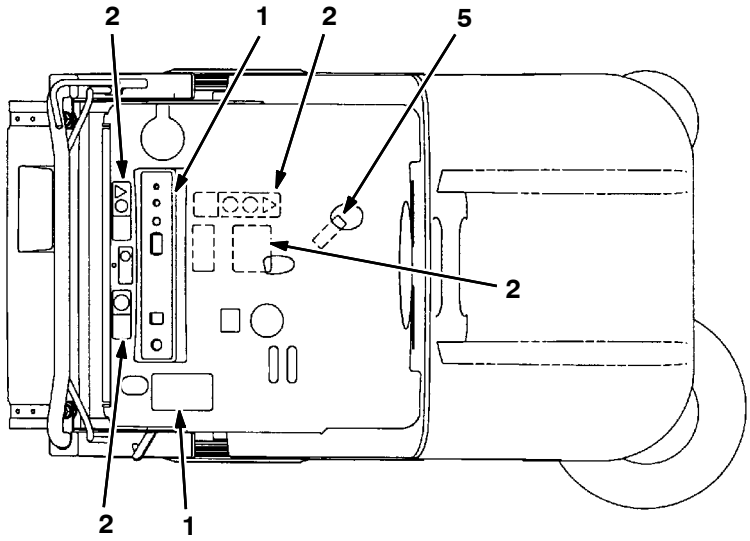

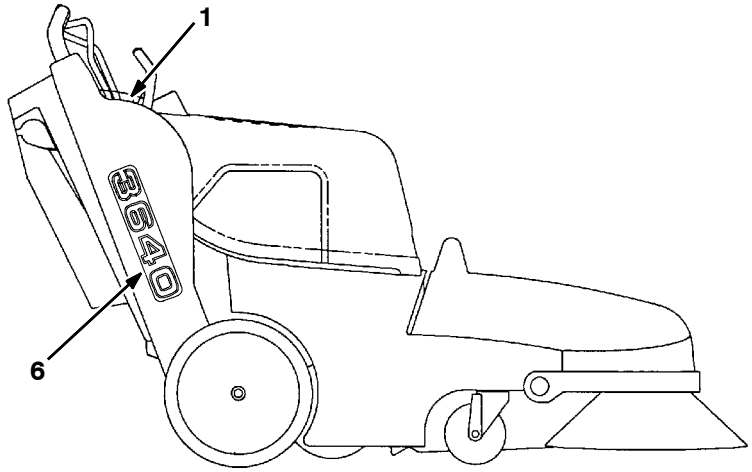

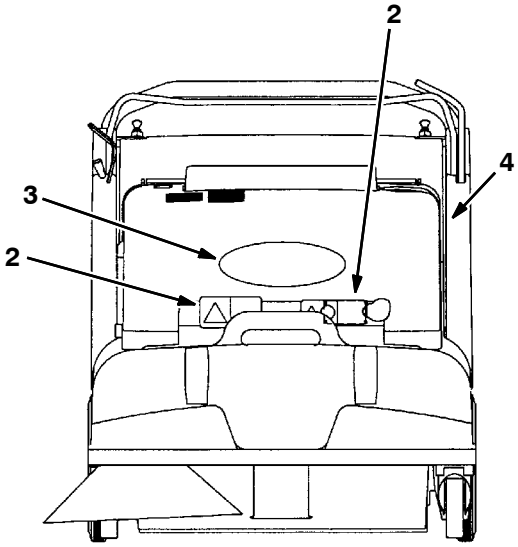

350910 - E, EE

Ref.	Part No.	Serial Number	Description	Qty.
1	80349	(000000-)	Label Set, Operational 3640 E	1
2	80951	(000000-)	Label Set, Info/Hzrd [6080/3640]	1
2	80206	(000000-)	Label Set, Info/Hzrd, Tj [6080/3640] (Japan)	1
3	09806	(000000-)	Label, Tennant Logo	1
4	08823	(000000-)	Label, EE	1
5	80112	(000000-)	Label, Charger Connection	1
6	1048749	(000000-)	Label, Side [3640]	2

SECTION 3

Contents **Page**

Fig. 1 - Hopper Dump Assist Kit 3- 2
Fig. 2 - Dual Side Brush Kit 3- 4
Fig. 3 - Vacuum Bag Kit 3- 6
Fig. 4 - High Flow To Standard Panel Kit 3- 8
Fig. 5 - High Flow To Standard Bag Kit 3- 10
Fig. 6 - Standard To High Air Flow Kit 3- 12
Fig. 7 - High Flow Vacuum Wand Kit 3- 14
Fig. 8 - Vacuum Wand Extend Kit 3- 16
Fig. 9 - Hepa Filter Kit 3- 18
Fig. 10 - Wide Track Wheels Kit 3- 20
Fig. 11 - Battery Group, 130AH, Wet 3- 22
Fig. 12 - Battery Group, 225AH, Wet 3- 24
Fig. 13 - Battery Charger Group, 24V/11A (130Ah batteries), 1073638, 9009308 . . . . . 3- 25
Fig. 14 - Battery Charger Group, 24V/19A (225Ah batteries), 1029256 . . . . . 3- 26
Fig. 15 - Battery Charger Group, 24VDC/19A 50/60HZ, 1067630 (Japan Market) 3- 27
Fig. 16 - HydrolinkR Battery Watering System Kit (S/N 000000- 11029069) 3- 28
Fig. 17 - Manual Battery Watering System (S/N 11029070 -) 3- 30
Fig. 18 - Steel Static Chain Kit 3- 32
Fig. 19 - Battery Cutout Button Kit 3- 33
Fig. 20 - Hinge Repair Kit 3- 34
Fig. 21 - Carpet Sweeping Kits, 130AH 3- 35
Fig. 22 - Carpet Sweeping Kits, 225AH 3- 36
Fig. 23 - Main Brush Downpressure Kit 3- 37
Fig. 24 - Documentation Group 3- 38

Fig. 1 - Hopper Dump Assist Kit

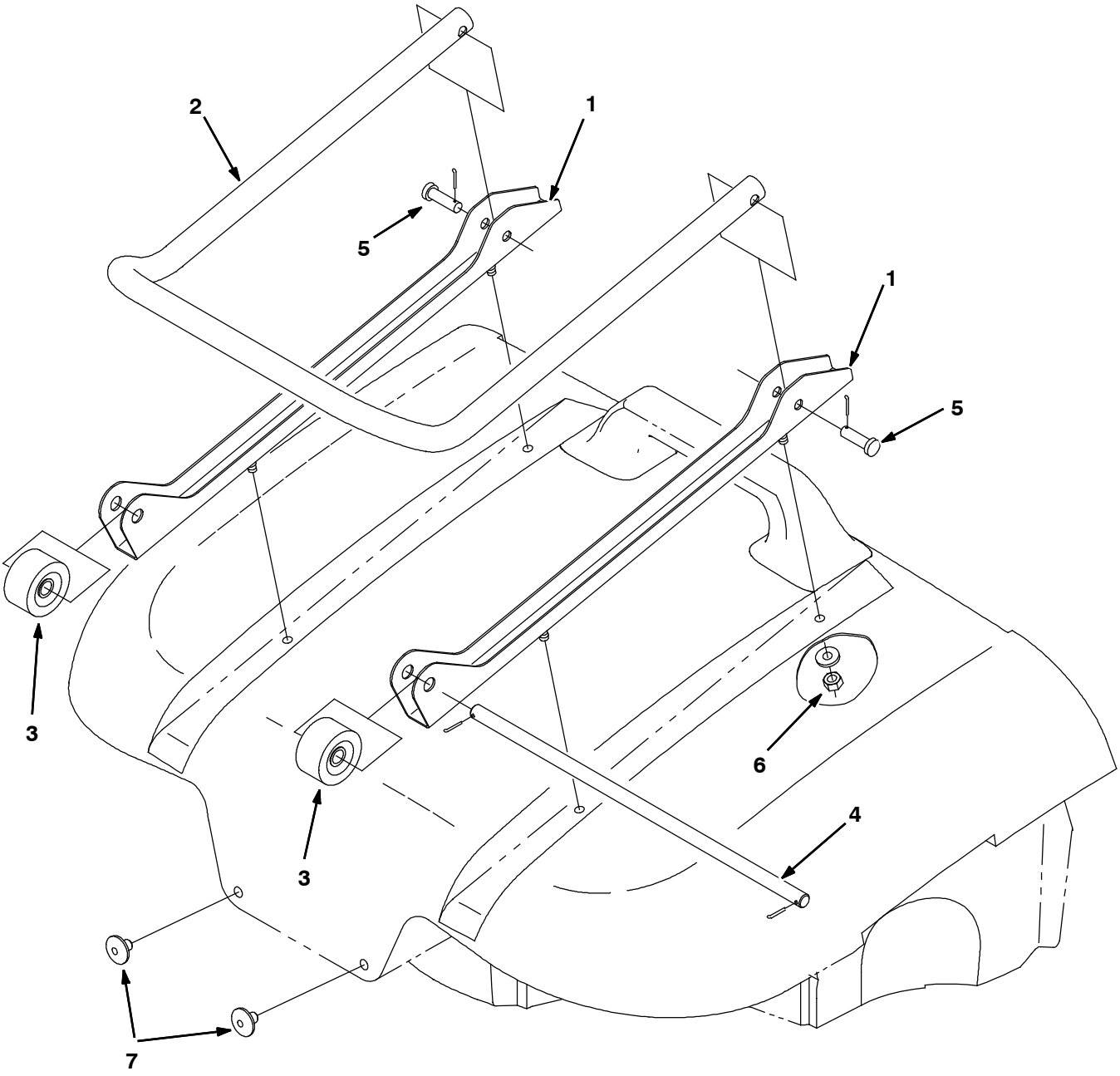

350894 - ALL

Fig. 1 - Hopper Dump Assist Kit

	Ref.	Part No.	Serial Number	Description	Qty.
▽		80249	(000000-)	Hopper Dump Assist Kit	1
▲	1	80960	(000000-)	Bracket, Hopper Assist	2
▲	2	80961	(000000-)	Handle, Hopper Assist	1
▲	3	222403	(000000-)	Wheel, 2.O Dia	2
▲	4	80289	(000000-)	Shaft, Hopper Assist	1
▲	5	29557	(000000-)	Pin,Clevis,0.37 Dia.X 1.25 Lg	2
▲	6	08713	(000000-)	Nut- Hxlocnyln M 8X1.25 Reg Ss	4
▲	7	80300	(000000-)	Button, Wear	2

Fig. 2 - Dual Side Brush Kit

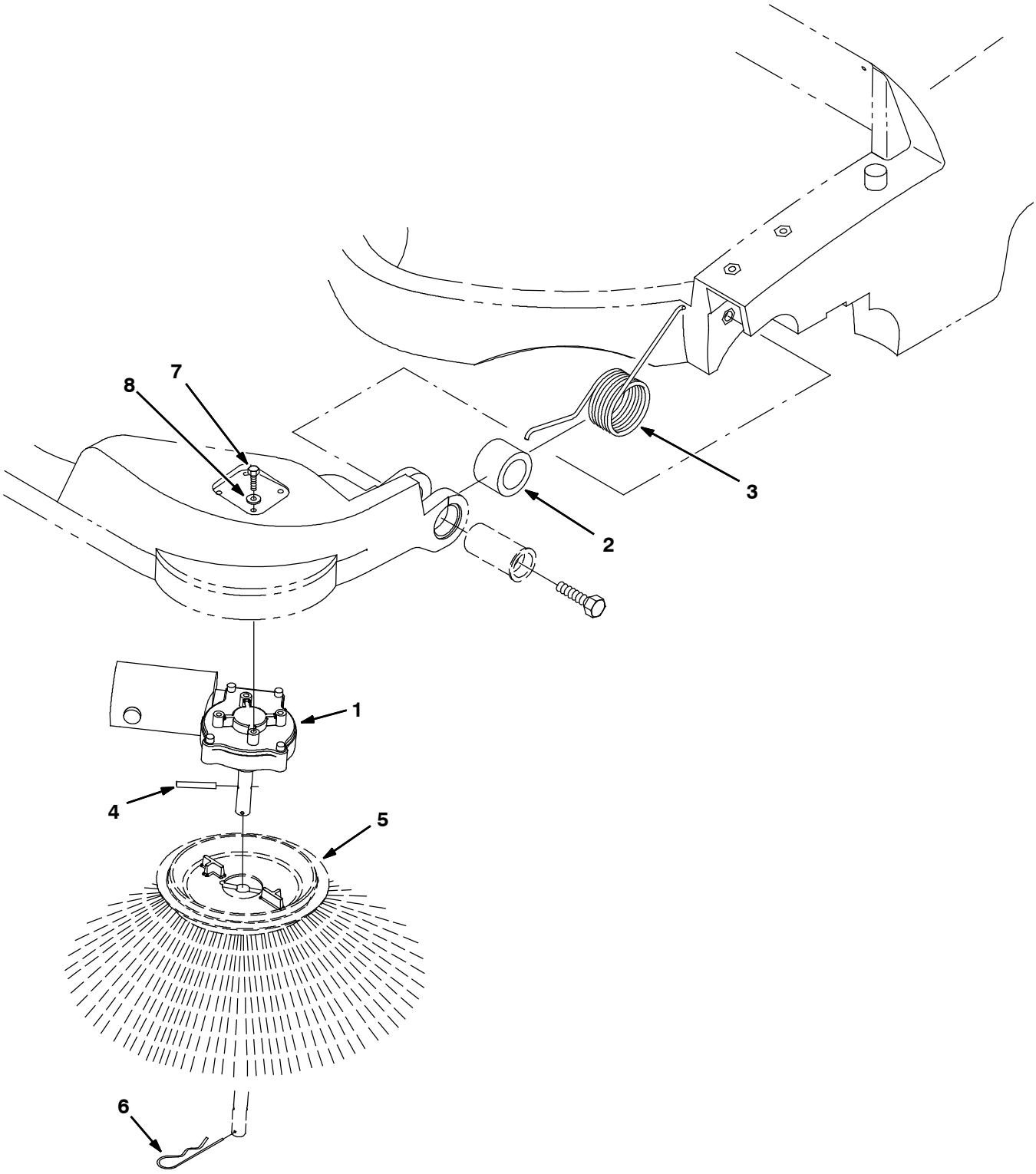

350906 - E

Fig. 2 - Dual Side Brush Kit

	Ref.	Part No.	Serial Number	Description	Qty.
▽		378763	(000000-)	Kit, Brush, Side, Dual, 24V	1
▲▽	1	1056182	(000000-)	Motor, Ele, 24vdc 0068rpm 0.08hp 04.5a	1
▲▲		80125	(000000-)	Brush & Spring Assy	1
▲▲		80127	(000000-)	Cap, Brush	2
▲▲		369795	(000000-)	Holder, Brush	2
▲▲		369796	(000000-)	Clip	2
▲	2	80321	(000000-)	Sleeve	1
▲	3	379206	(000000-)	Spring, Torsion	1
▲	4	11516	(000000-)	Pin	1
▲	5	80042	(000000-)	Side Brush	1
▲	6	02942	(000000-)	Pin, Hair Cotter	1
▲	7	06942	(000000-)	Screw, Hex, M6 X 1.00 X 16, 8.8	4
▲	8	32490	(000000-)	Washer, Flat, 0.25 Std	4

Fig. 3 - Vacuum Bag Kit

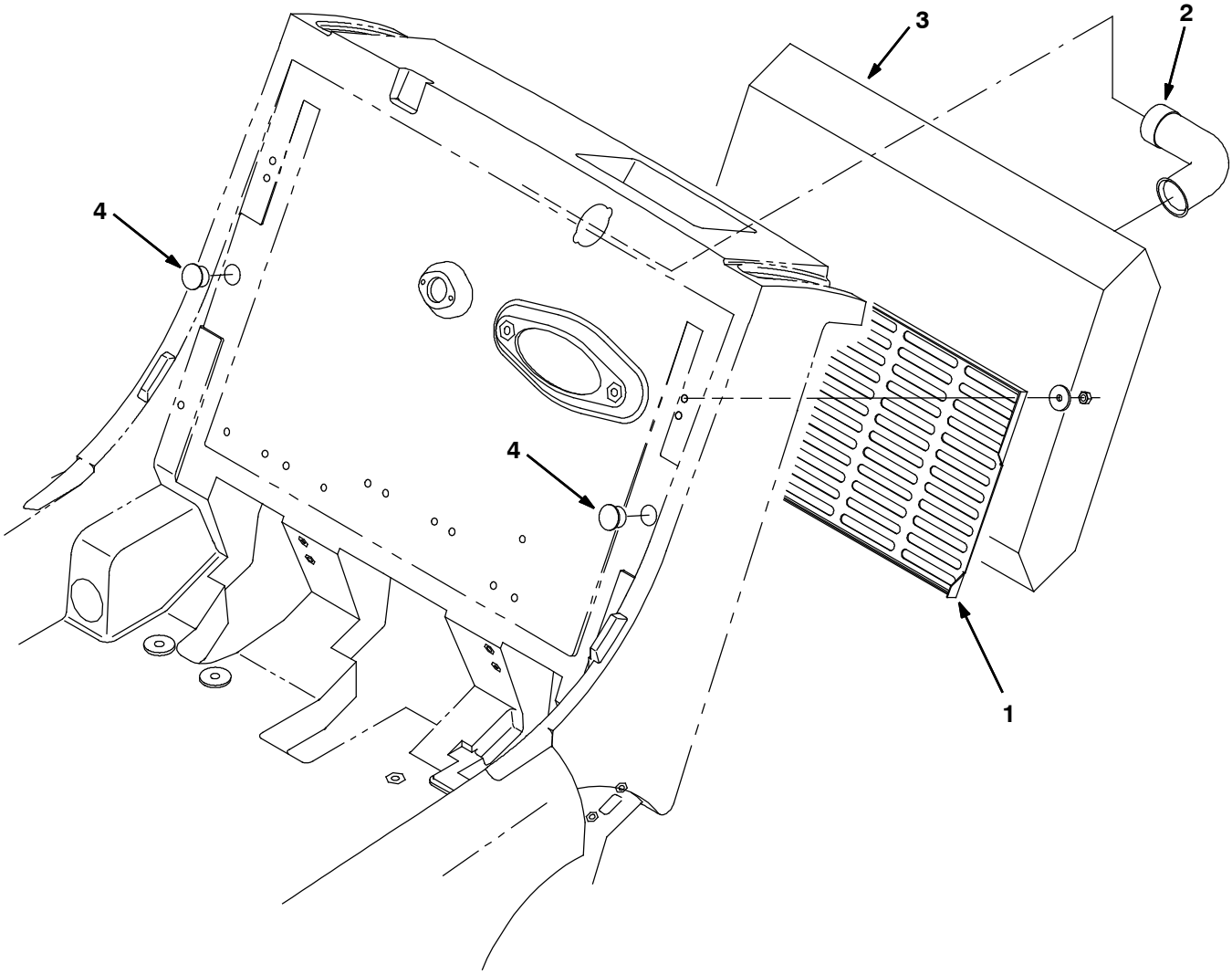

350940 - ALL

Fig. 3 - Vacuum Bag Kit

	Ref.	Part No.	Serial Number	Description	Qty.
▽		80301	(000000-)	Conv Kit. Panel Filter To Bag	1
▲	1	80103	(000000-)	Screen, Vacuum Bag	1
▲	2	80433	(000000-)	Tube, Vacuum	1
▲	3	1067680	(000000-)	Bag, Vacuum, Paper [1pick=1pkg] (1 Pkg = 10 Bags)	1
▲	4	80288	(000000-)	Plug Button	2

Fig. 4 - High Flow To Standard Panel Kit

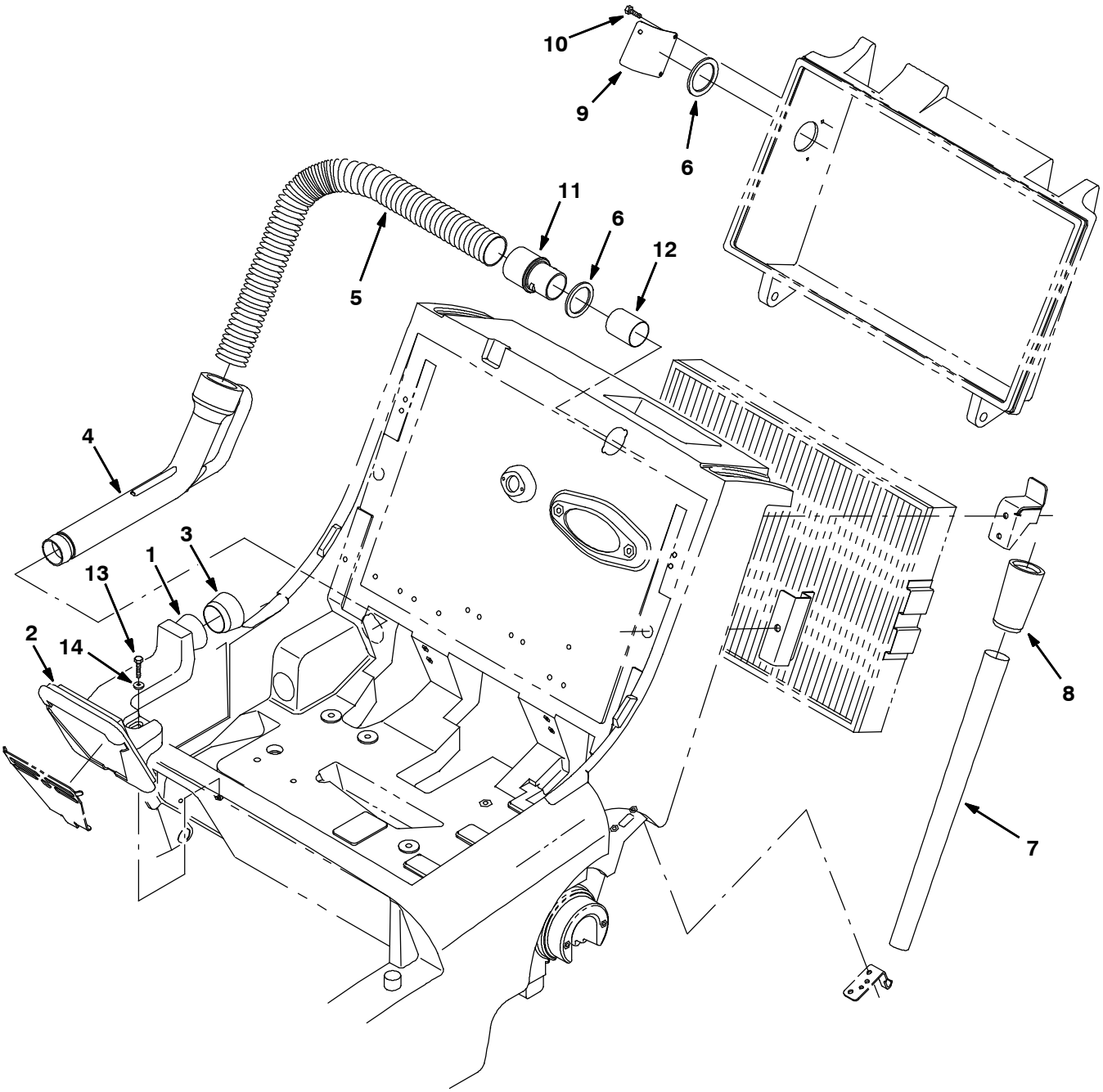

352778 - ALL

Fig. 4 - High Flow To Standard Panel Kit

	Ref.	Part No.	Serial Number	Description	Qty.
▽		373148	(000000-)	Kit, High Air Flow To Std, Pan	1
▲▽		373129	(000000-)	Kit, Replmt Vacuum Chamber	1
▲▲	1	9005838	(000000-)	Housing, Vacuum, Afmkt [3640]	1
▲▲	2	80096	(000000-)	Seal, Chamber	1
▲▲	3	373125	(000000-)	Seal, Vac Wand	1
▲▲	4	9005837	(000000-)	Nozzle, Wand, Vacuum, 1.8od, Afmkt[3640]	1
▲	5	80464	(000000-)	Hose, Flex	1
▲	6	80392	(000000-)	Gasket, Cuff	2
▲	7	190039	(000000-)	Tube, Extn, Blk [W-500]	1
▲	8	80299	(000000-)	Coupling, Vac-Wand	1
▲	9	373145	(000000-)	Cover, Hole	1
▲	10	20394	(000000-)	Screw, Hex, #10	3
▲	11	80270	(000000-)	Cuff, Flex	1
▲	12	80050	(000000-)	Tube, Hose	1
▲	13	06945	(000000-)	Screw, Hex, M6 X 1.0 X 30, 8.8	1
▲	14	32490	(000000-)	Washer, Flat, 0.25 Std	1

Fig. 5 - High Flow To Standard Bag Kit

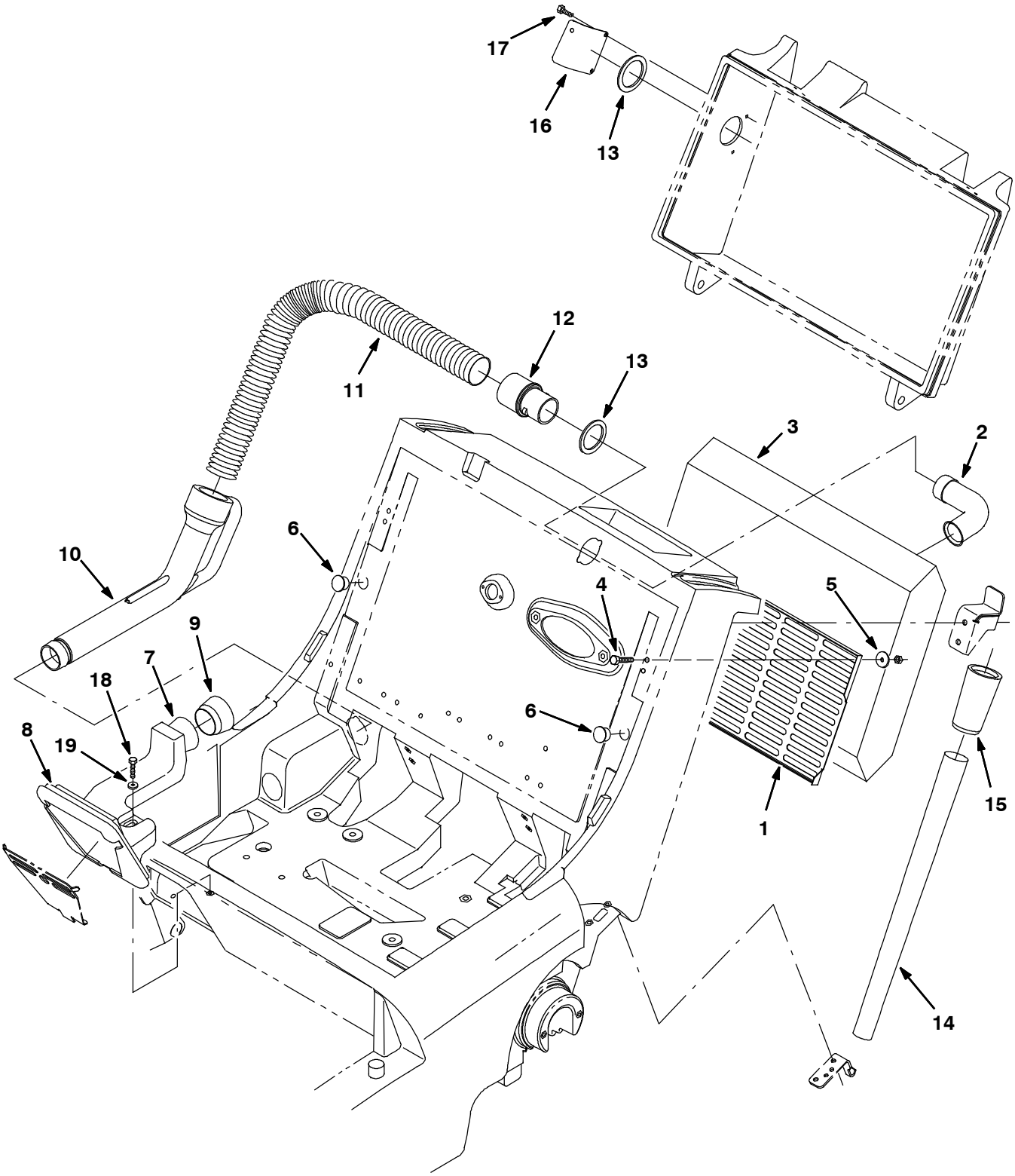

352776 - ALL

Fig. 5 - High Flow To Standard Bag Kit

	Ref.	Part No.	Serial Number	Description	Qty.
▽		373152	(000000-)	Kit, Hi- Flow To Std, Bag	1
▲	1	80103	(000000-)	Screen, Vacuum Bag	1
▲	2	80433	(000000-)	Tube, Vacuum	1
▲	3	1067680	(000000-)	Bag, Vacuum, Paper [1pick=1pkg] (1 Pkg = 10 Bags)	1
▲	4	09258	(000000-)	Screw, Pan, M06- 1.0 X 40, 4.8	2
▲	5	41178	(000000-)	Washer, Flat, .25 Fender	2
▲	6	80288	(000000-)	Plug Button	2
▲▽		373129	(000000-)	Kit, Replmt Vacuum Chamber	1
▲▲	7	9005838	(000000-)	Housing, Vacuum, Afmkt [3640]	1
▲▲	8	80096	(000000-)	Seal, Chamber	1
▲▲	9	373125	(000000-)	Seal, Vac Wand	1
▲▲	10	9005837	(000000-)	Nozzle, Wand, Vacuum, 1.8od, Afmkt[3640]	1
▲	11	80464	(000000-)	Hose, Flex	1
▲	12	80270	(000000-)	Cuff, Flex	1
▲	13	80392	(000000-)	Gasket, Cuff	2
▲	14	190039	(000000-)	Tube, Extn, Blk [W- 500]	1
▲	15	80299	(000000-)	Coupling, Vac- Wand	1
▲	16	373145	(000000-)	Cover, Hole	1
▲	17	20394	(000000-)	Screw, Hex, #10	3
▲	18	06945	(000000-)	Screw, Hex, M6 X 1.0 X 30, 8.8	1
▲	19	32490	(000000-)	Washer, Flat, 0.25 Std	1

Fig. 6 - Standard To High Air Flow Kit

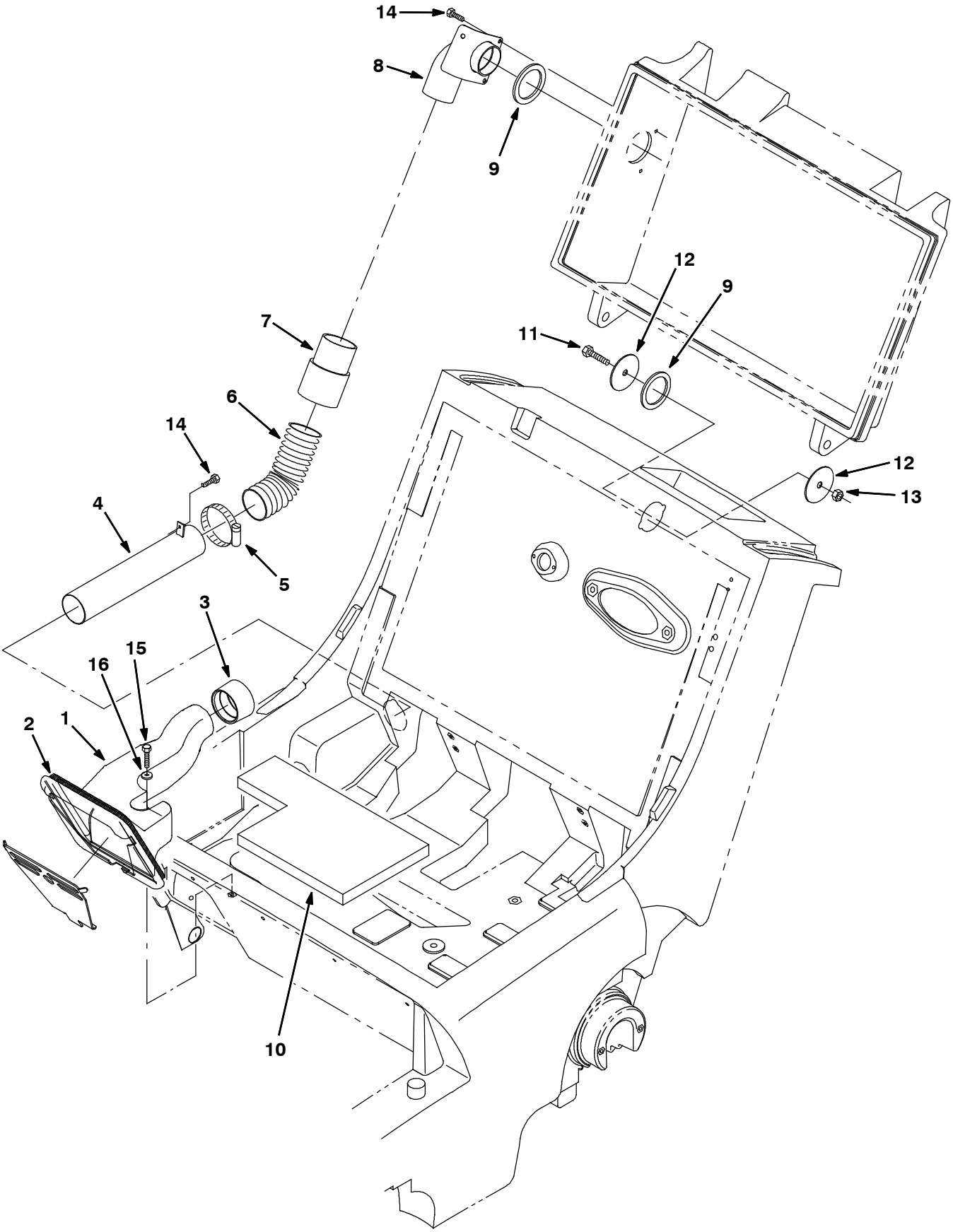

351344 - ALL

Fig. 6 - Standard To High Air Flow Kit

	Ref.	Part No.	Serial Number	Description	Qty.
▽		373121	(000000-)	Kit, High Vac System Airflow	1
▲	1	9005836	(000000-)	Duct, Vacuum, Hi- Flow, Afmkt [3640]	1
▲	2	80096	(000000-)	Seal, Chamber	1
▲	3	373116	(000000-)	Seal, Tube, Vacuum	1
▲	4	373123	(000000-)	Tube, Vacuum	1
▲	5	22297	(000000-)	Clamp, Wormdrive	1
▲	6	373118	(000000-)	Hose, Flex	1
▲	7	83285	(000000-)	Cuff, Hose	1
▲	8	373113	(000000-)	Coupling, Hose, Elbow	1
▲	9	80392	(000000-)	Gasket, Cuff	2
▲	10	373119	(000000-)	Spacer, Battery	1
▲	11	76570	(000000-)	Screw, Hex, M08- 1.25 X 30, 8.8	1
▲	12	373117	(000000-)	Washer, Flat, 0.38b 2.25d .07, Stl, Pnt	2
▲	13	08709	(000000-)	Nut, Hex, Lock, M08- 1.25	1
▲	14	20394	(000000-)	Screw, Hex, #10	3
▲	15	06945	(000000-)	Screw, Hex, M6 X 1.0 X 30, 8.8	1
▲	16	32490	(000000-)	Washer, Flat, 0.25 Std	1

Fig. 7 - High Flow Vacuum Wand Kit

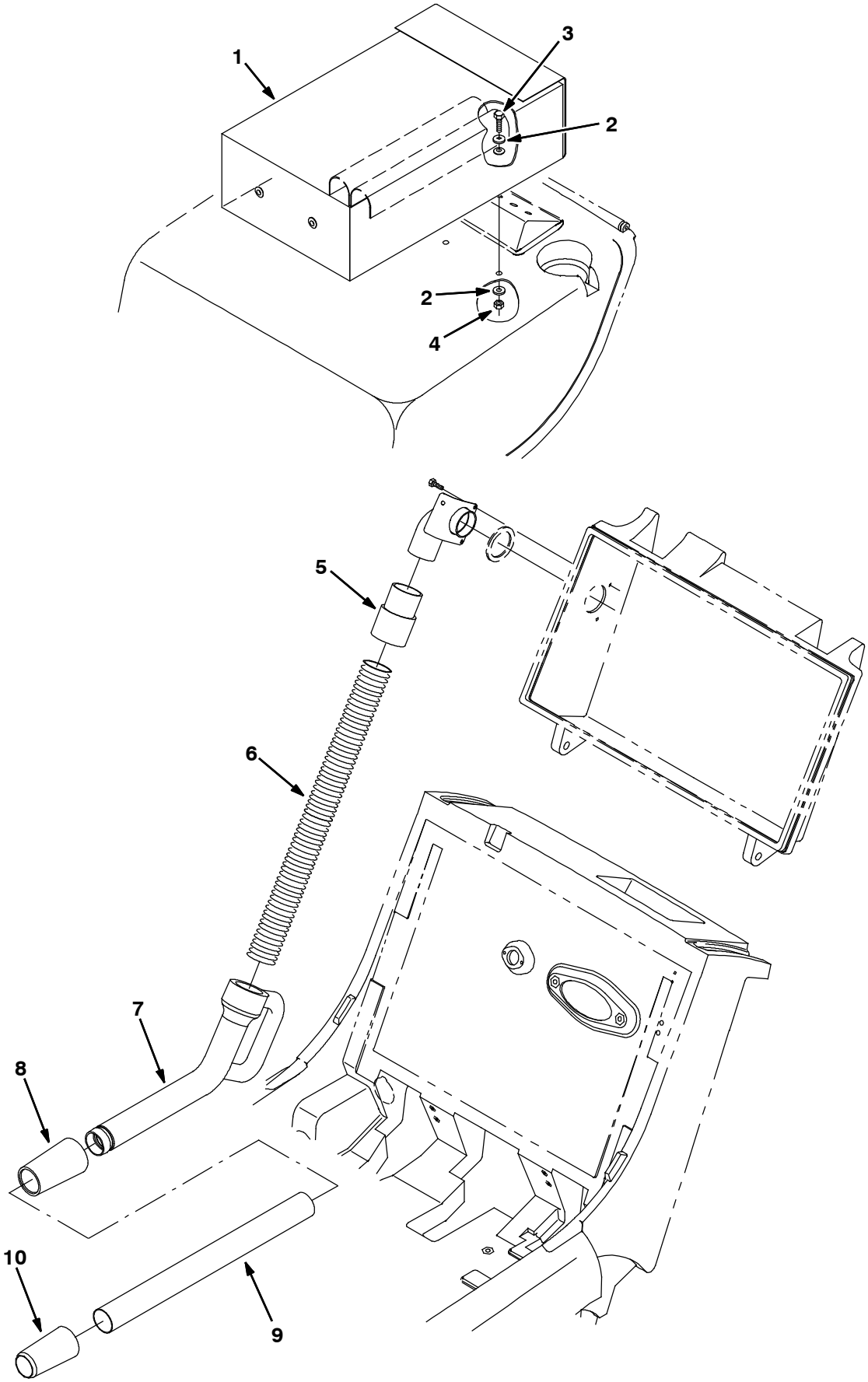

352774 - ALL

Fig. 7 - High Flow Vacuum Wand Kit

	Ref.	Part No.	Serial Number	Description	Qty.
▽		373137	(000000-)	Kit, Vac Wand F/Hi Air Flow	1
▲	1	65580	(000000-)	Bag, Power	1
▲	2	32492	(000000-)	Washer, Flat, .38 Hard	4
▲	3	39277	(000000-)	Screw, Hex, M08- 1.25 X 25, 8.8	2
▲	4	08709	(000000-)	Nut, Hex, Lock, M08- 1.25	2
▲	5	83285	(000000-)	Cuff, Hose	1
▲	6	83289	(000000-)	Hose, Flex	1
▲	7	9005835	(000000-)	Nozzle, Wand, Vacuum, Afmkt [3640]	1
▲	8	83287	(000000-)	Coupling, Vac Wand	1
▲	9	379204	(000000-)	Tube, Vac Wand	1
▲	10	80299	(000000-)	Coupling, Vac- Wand	1

Fig. 8 - Vacuum Wand Extend Kit

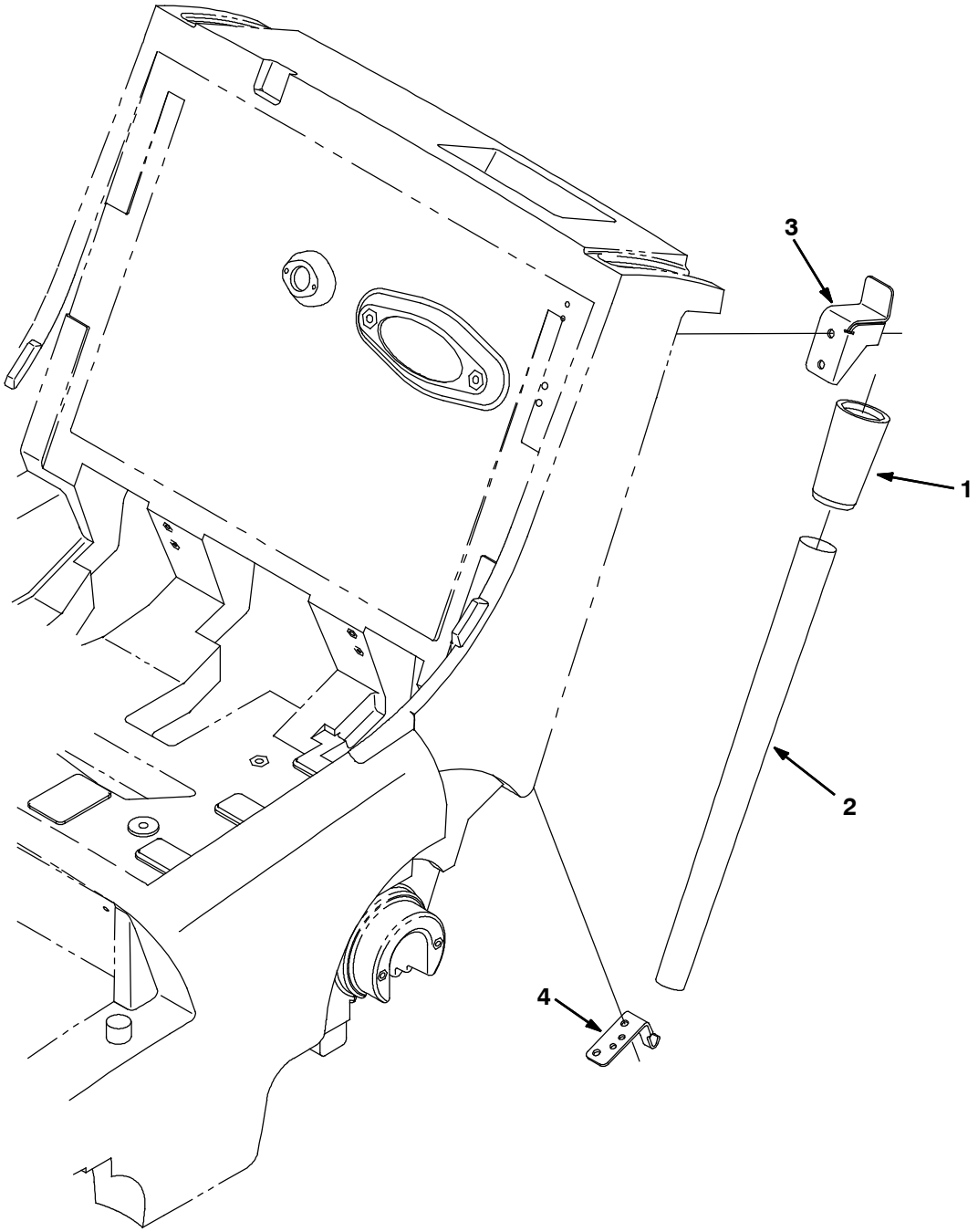

352798 - ALL

Fig. 8 - Vacuum Wand Extend Kit

	Ref.	Part No.	Serial Number	Description	Qty.
▽		373106	(000000-)	Kit, Vacumm Wand, Extend	1
▲	1	80299	(000000-)	Coupling, Vac- Wand	1
▲	2	190039	(000000-)	Tube, Extn, Blk [W- 500]	1
▲	3	80106	(000000-)	Bracket, Handle, Stop	1
▲	4	80113	(000000-)	Plate, Cable, Mount	1

Fig. 9 - Hepa Filter Kit

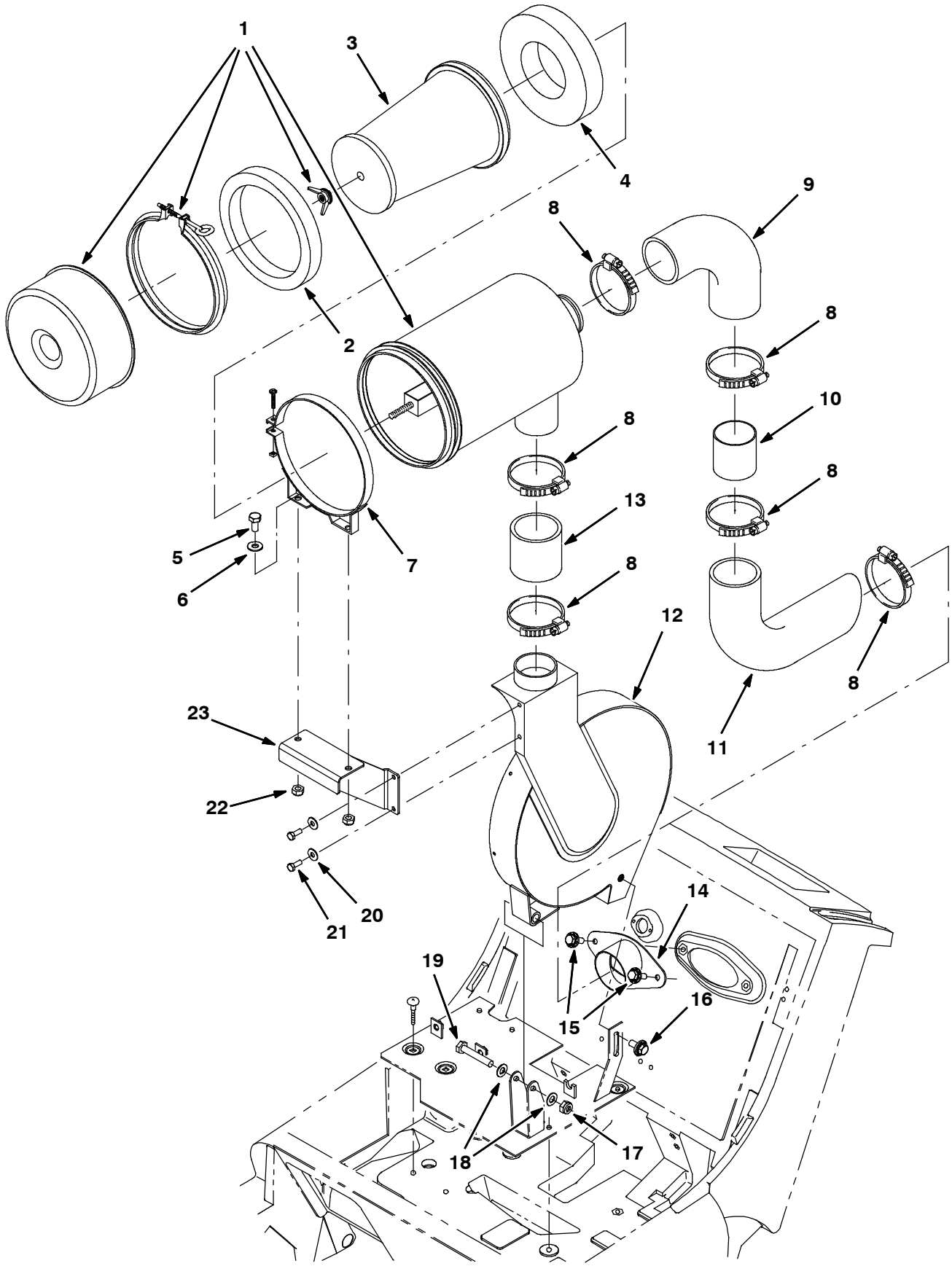

355281 - ALL

Fig. 9 - Hepa Filter Kit

Ref.	Part No.	Serial Number	Description	Qty.
1	75609	(000000-)	Filter Assy, Air, 3.0 Inlet	1
2	310156	(000000-)	Spacer, Fltr, Front	1
3	310159	(000000-)	Filter, Hepa	1
4	310155	(000000-)	Spacer, Fltr, Rear	1
5	15675	(000000-)	Screw, Hex, M8 X 1.25 X 16, Ss	1
6	32490	(000000-)	Washer, Flat, 0.25, Std	2
7	75606	(000000-)	Band, Mtg, Fltr, Air, 8.00id	2
8	43555	(000000-)	Clamp, Hose, Wormdrive, 2.62- 3.50d	6
9	310153	(000000-)	Cs, Hose, Elbow, Air- Clnr / Cplg	1
10	310151	(000000-)	Tube, Cplg, Hose	1
11	310154	(000000-)	Cs, Hose, Elbow, Cplg / Adapter	1
12	310150	(000000-)	Cs, Housing Wldt, Vacfan	1
13	310152	(000000-)	Cs, Hose, Vacfan / Air- Clnr	1
14	310149	(000000-)	Adapter Wldt, Hose, Frame	1
15	1072628	(000000-)	Screw, Hex, M8 X 1.25 X 25, Ss, Sems	2
16	1020341	(000000-)	Screw, Hex, M8 X 1.25 X 20, Ss, Sems	1
17	41430	(000000-)	Nut, Hex, Lock, M10 X 1.5, Nl	1
18	32485	(000000-)	Washer, Flat, 0.38, Sae	2
19	06963	(000000-)	Screw, Hex, M10 X 1.50 X 60, 8.8	1
20	01684	(000000-)	Washer, Flat, 0.27b 0.69d .05, Ss	2
21	15678	(000000-)	Screw, Hex, M6 X 1.00 X 16, Ss	1
22	08709	(000000-)	Nut, Hex, Lock, M8 X 1.25, Nl	2
23	310148	(000000-)	Bracket Wldt, Fltr, Air, Elec [6080]	1

Fig. 10 - Wide Track Wheels Kit

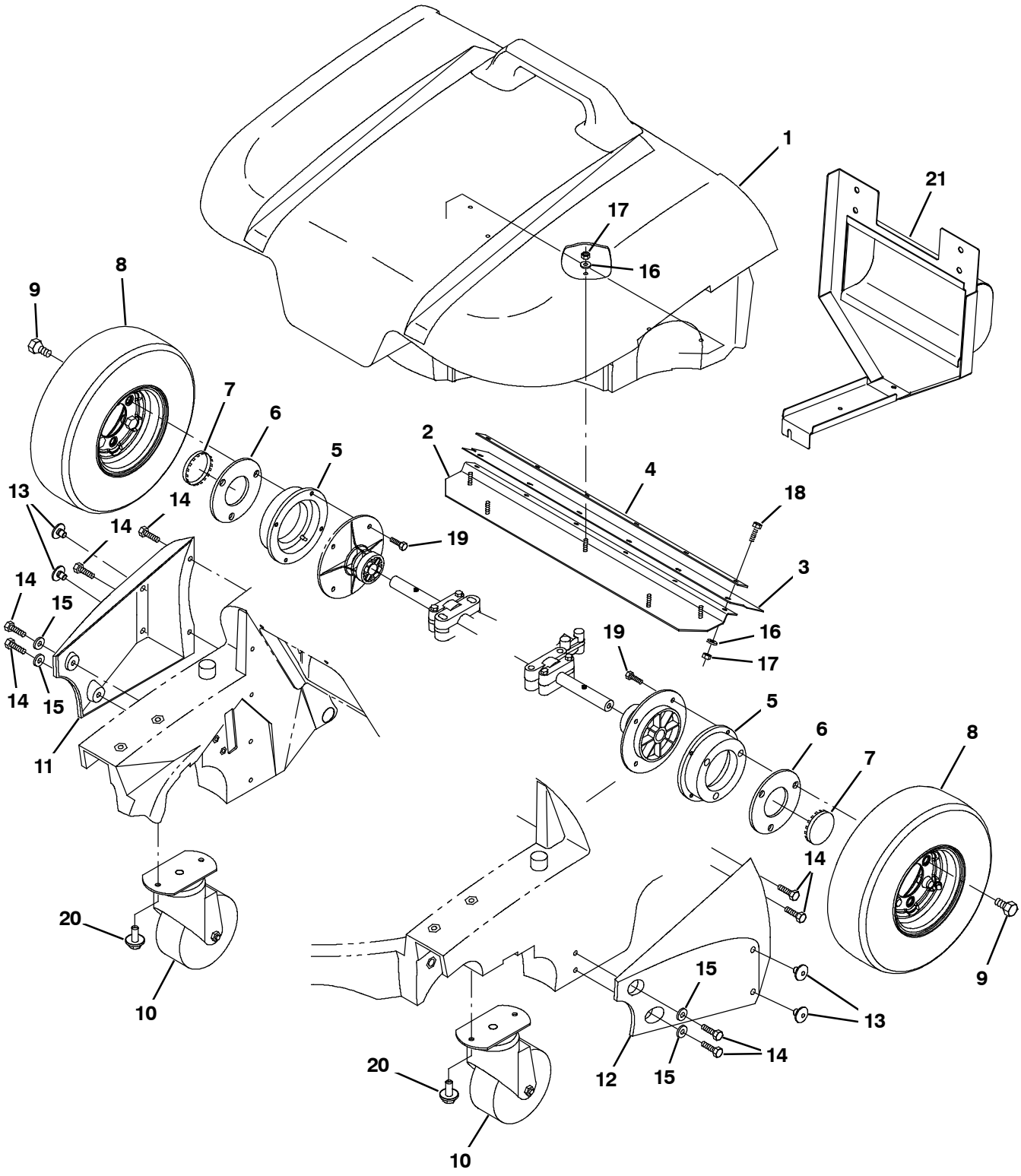

351155 - ALL

Fig. 10 - Wide Track Wheels Kit

	Ref.	Part No.	Serial Number	Description	Qty.
▽		80252	(000000-)	Kit, Wheels, Wide Track 6080	1
▲	1	9005834	(000000-)	Hopper, Wide Track, Afmkt [3640]	1
▲	2	80220	(000000-)	Plate, Wear	1
▲	3	373142	(000000-)	Skirt, Hopper	1
▲	4	80230	(000000-)	Retainer, Lip	1
▲	5	80211	(000000-)	Adaptor, Wheel	2
▲	6	80306	(000000-)	Plate, Hub- Cap	2
▲	7	47178- 6	(000000-)	Plugbtn 2.00H .04- .19 Chromstl	2
▲	8	1052673	(000000-)	Tire Assy, Pneu, 4.10/3.5- 06 3.5bc/3bolt	2
▲	9	80276	(000000-)	Bolt, Lug,	6
▲	10	1049023	(000000-)	Caster, Swivel, 5.0d 2.0w, 2hole, Neo	2
▲	11	80216	(000000-)	Guard, Wheel , Right	1
▲	12	378803	(000000-)	Guard, Wheel, Left	1
▲	13	80300	(000000-)	Button, Plug	4
▲	14	39394	(000000-)	Screw, Hex, .31- 09 X 1.25, Wood	8
▲	15	32491	(000000-)	Washer, Flat, 0.31, Std	4
▲	16	01684	(000000-)	Washer, Flat, 0.25 Ss	11
▲	17	08712	(000000-)	Nut, Hex, Lock, M6 X 1.0, Ss, Nl	11
▲	18	08716	(000000-)	Screw, Hex, M6 X 1.0 X 20, Ss	6
▲	19	87308	(000000-)	Screw, Hex, M6 X 1.0 X 12, 8.8	8
▲	20	1020341	(000000-)	Screw, Hex, M8 X 1.25 X 20, Ss, Sems	4
▲	21	379229	(000000-)	Plate Wldt, Back, Stop, Hd	1

Fig. 11 - Battery Group, 130AH, Wet

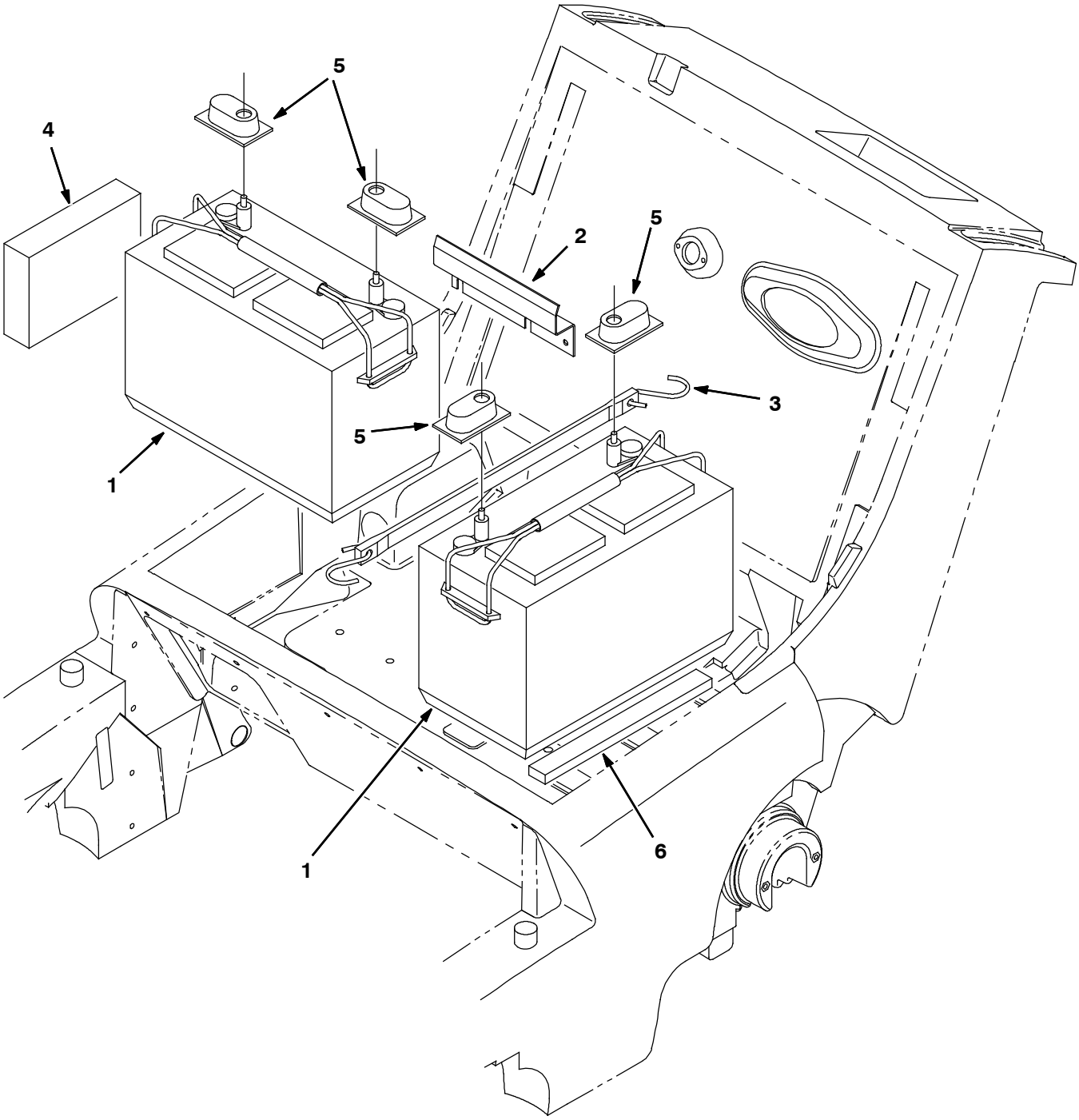

350902 - E

Fig. 11 - Battery Group, 130AH, Wet

	Ref.	Part No.	Serial Number	Description	Qty.
▽		80232	(000000-)	Battery Kit, 24vdc, 130ah, Wet, Ci[3640]	1
▲	1	130869	(000000-)	Battery, 12vdc 0130ah [30xhs- Wnt]	2
▲	2	379205	(000000-)	Bracket, Battery	1
▲	3	33671	(000000-)	Strap,Rubber Tie- Down	1
▲	4	80134	(000000-)	Spacer, Battery, Foam, 1.75 X 4.8 X 7.0	1
▲	5	1041030	(000000-)	Cap, Battery (Short Black - Standard)	4
	5	45962	(000000-)	Cap, Plstc, .04 1.38 X 2.30 0.5L (Tall Clear - Optional)	4
	6	13294	(000000-)	Seal, Rbr, .50 X 1.00 X 10.5 (NLA - No Longer Available W/O Replacement)	1

Fig. 12 - Battery Group, 225AH, Wet

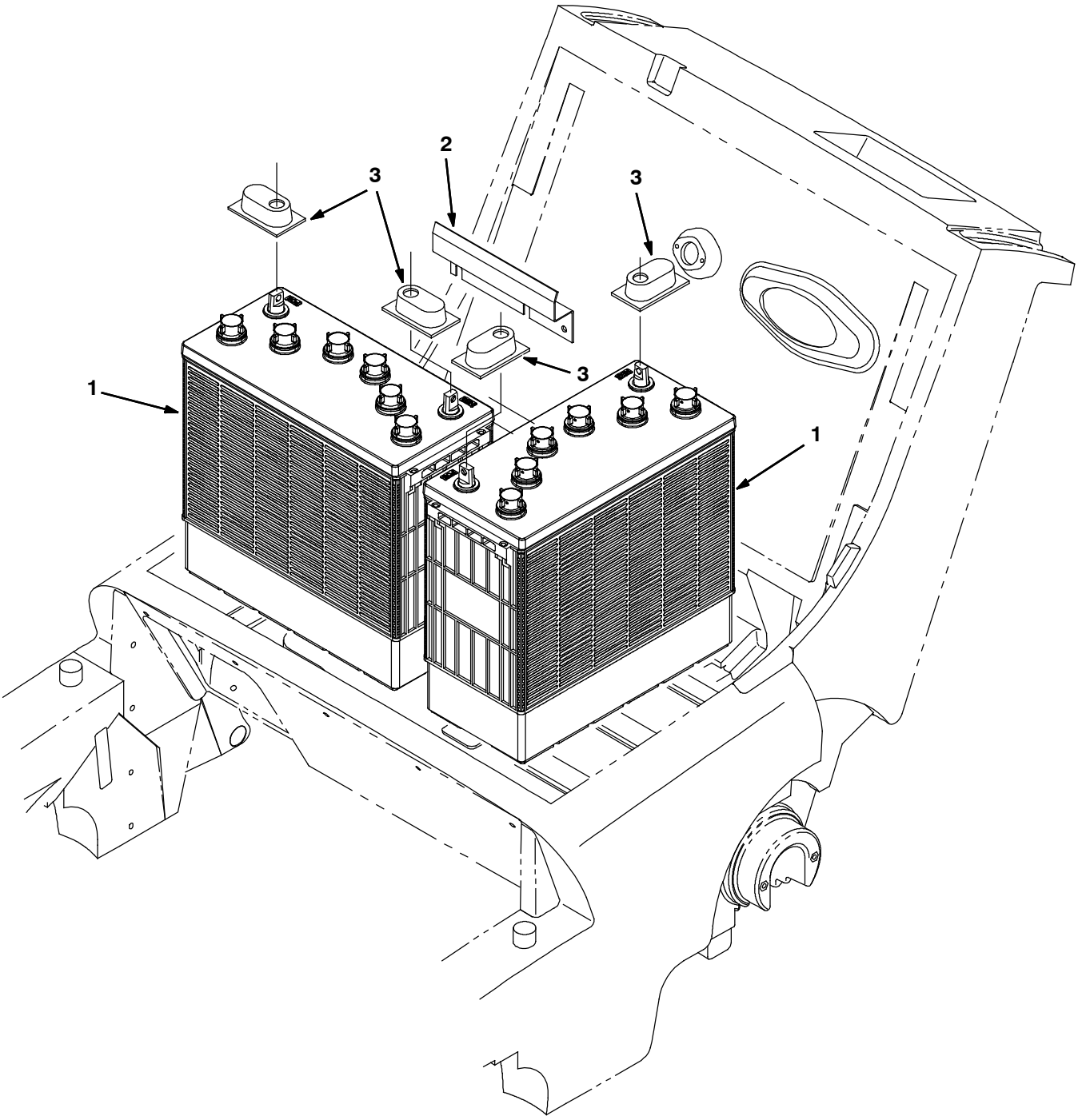

350899 - E

Ref.	Part No.	Serial Number	Description	Qty.
1	1070591	(000000-)	Battery, Wet, 12vdc 0225ah	2
2	379205	(000000-)	Bracket, Battery	1
3	1041030	(000000-)	Cap, Battery (Short Black - Optional)	4
3	45962	(000000-)	Cap, Plstc, .04 1.38 X 2.30 0.5L (Tall Clear - Optional)	4

Fig. 13 - Battery Charger Group, 24V/11A (130Ah batteries), 1073638, 9009308

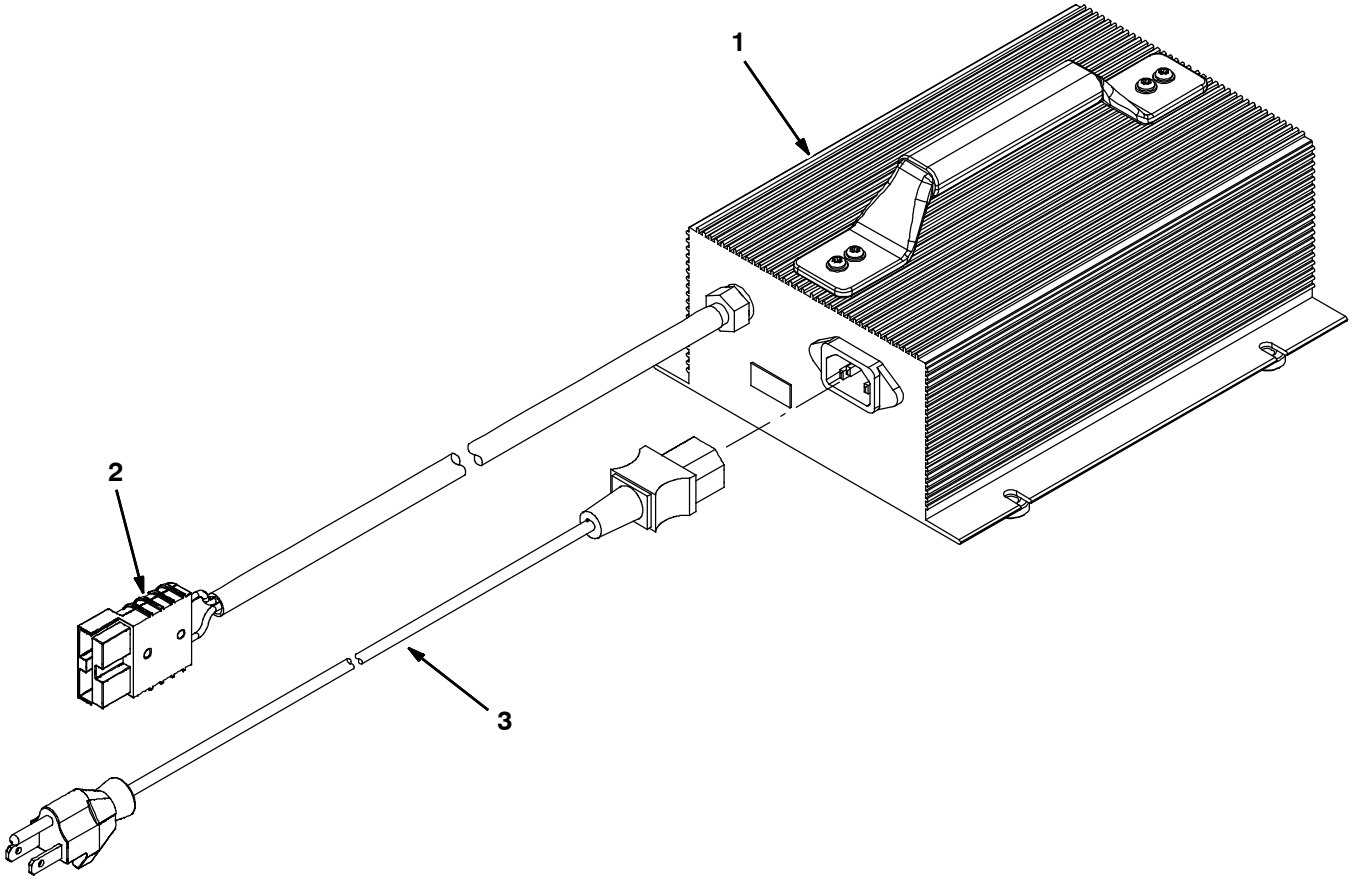

354778 - E

	Ref.	Part No.	Serial Number	Description	Qty.
▽	1	1073638	(000000-)	Charger, 24vdc 11a Var Vac 1ph 50/60hz	1
▲	2	605387	(000000-)	Connector, Anderson, 50a,Red W/O Contact	1
▲	3	1017079	(000000-)	Cord, Extn, 16ga /3, 10ft [Sjt]	1
▽	1	9009308	(000000-)	Charger Kit, 24vdc, 11a Var 50/60hz[Kor] (Korea)	1
▲	2	605387	(000000-)	Connector, Anderson, 50a,Red W/O Contact	1
▲	3	1070626	(000000-)	Cord, Power, 2.5m L, 7mm Dia, Blk[Korea]	1

Fig. 14 - Battery Charger Group, 24V/19A (225Ah batteries), 1029256

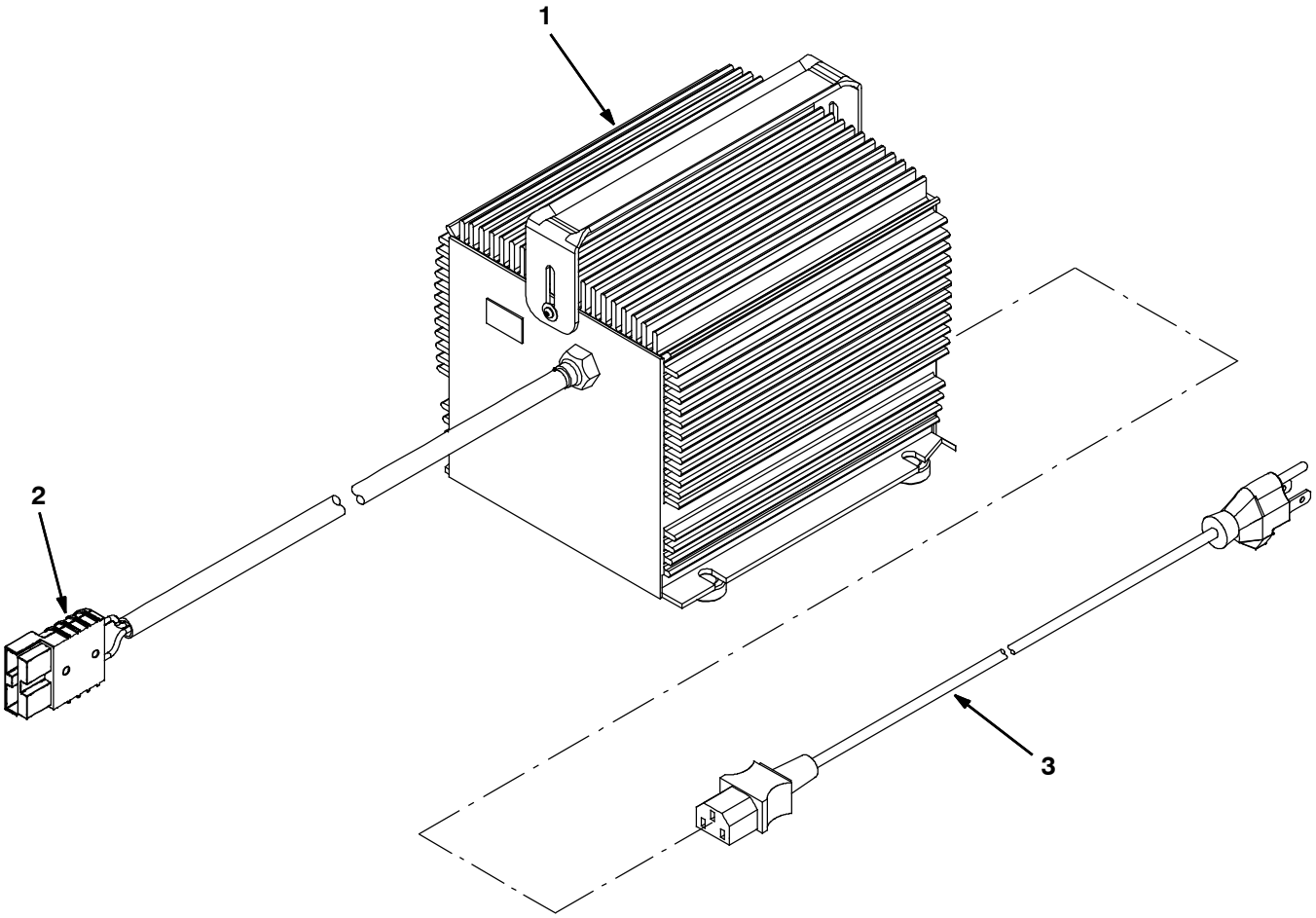

354779 - E

	Ref.	Part No.	Serial Number	Description	Qty.
▽	1	1029256	(000000-)	Charger, 24vdc, 19a Var Vac 1ph 50/60hz	1
▲	2	605387	(000000-)	Connector, Anderson, 50a,Red W/O Contact	1
▲	3	1017079	(000000-)	Cord, Extn, 16ga /3, 010ft [Sjt]	1

Fig. 15 - Battery Charger Group, 24VDC/19A 50/60HZ, 1067630 (Japan Market)

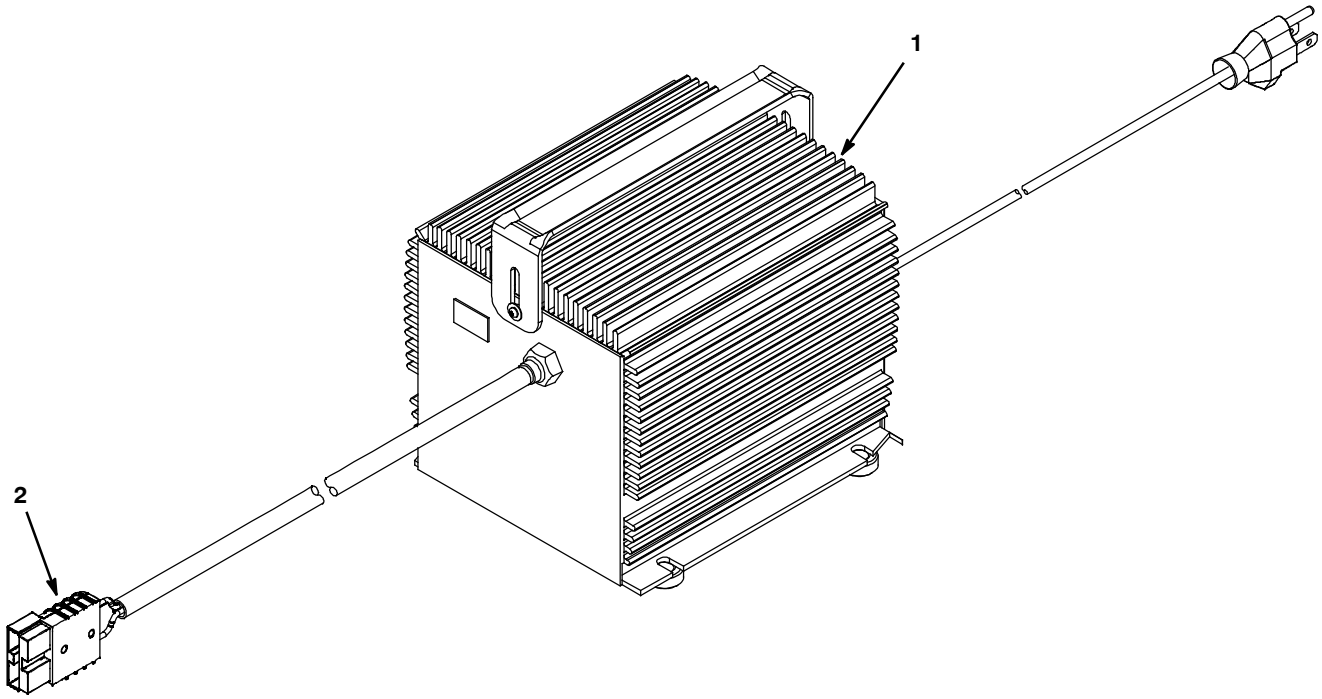

08080 - E

	Ref.	Part No.	Serial Number	Description	Qty.
▽	1	1067630	(000000-)	Charger, 24vdc, 19a Var Vac 50/60hz (Japan)	1
▲	2	605387	(000000-)	Connector, Anderson, 050a, Red [W/O Con]	1

Fig. 16 - Hydrolink® Battery Watering System Kit (S/N 000000-11029069)

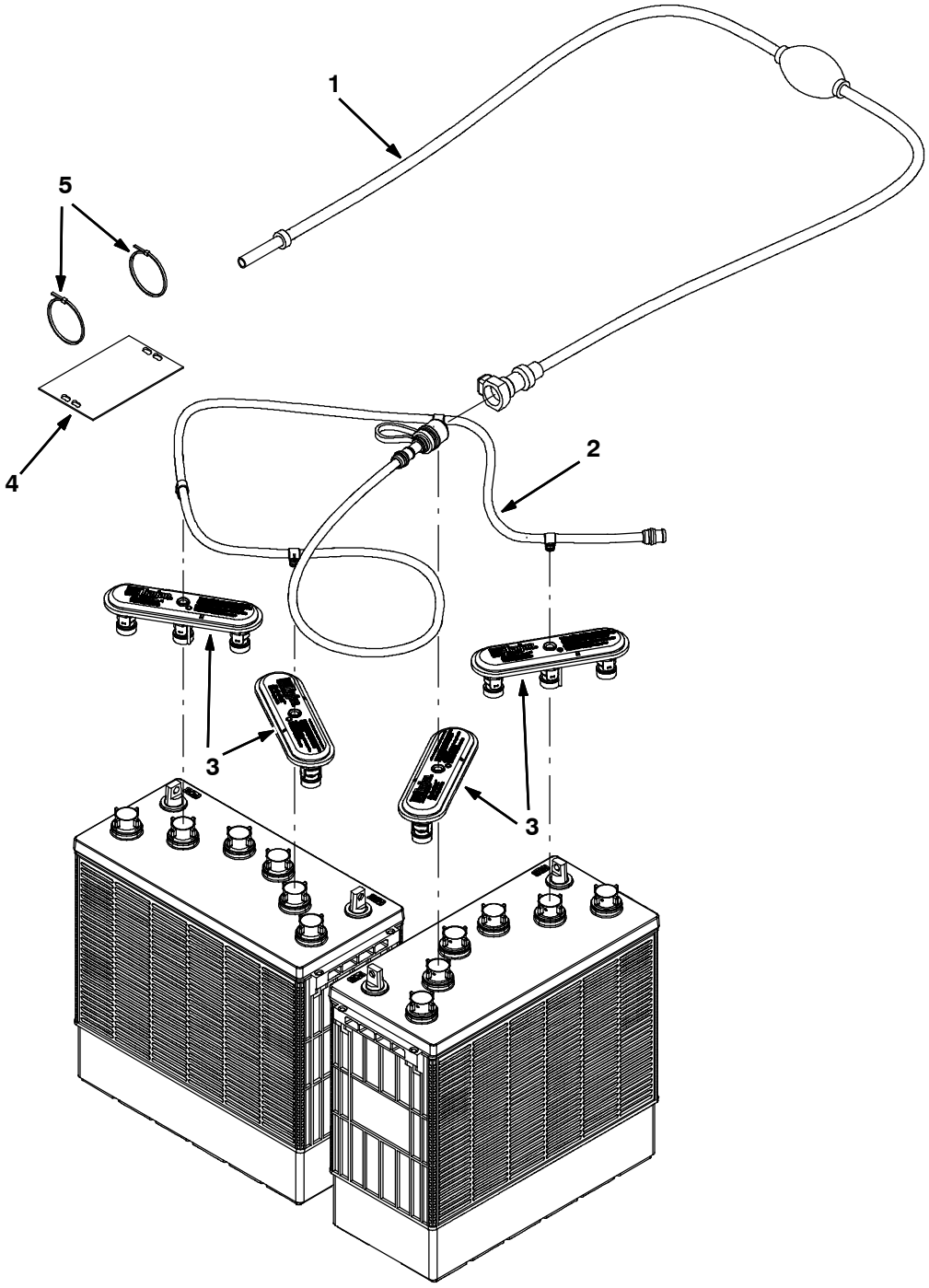

350899 - E

Fig. 16 - Hydrolink® Battery Watering System Kit (S/N 000000 - 11029069)

	Ref.	Part No.	Serial Number	Description	Qty.
▽		9010300	(000000- 11029069)	Pump Kit, Fill, Battery,24vdc,Ci[Trojan] (Replaced By 9021729)	1
▲	1	1058939	(000000- 11029069)	Pump Kit, Fill, Battery	1
▲	2	1229544	(000000- 11029069)	Tube, Water, Battery, 24vdc [Trojan]	1
▲	3	1204142	(000000- 11029069)	Cap, Fill, Battery [Trojan]	4
▲	4	1071084	(000000- 11029069)	Label, Tag, Battery [Hydrolink Watering]	1
▲	5	130773	(000000- 11029069)	Tie, Cable, Nyl, 11.0l, .14w, 3.0 Max. D	2

*****THIS KIT IS INTENDED FOR USE WITH TROJAN® LEAD ACID BATTERIES ONLY.

HYDROLINK® IS A REGISTERED TRADEMARK OF TROJAN® BATTERY COMPANY.

Fig. 17 - Manual Battery Watering System (S/N 11029070 -)

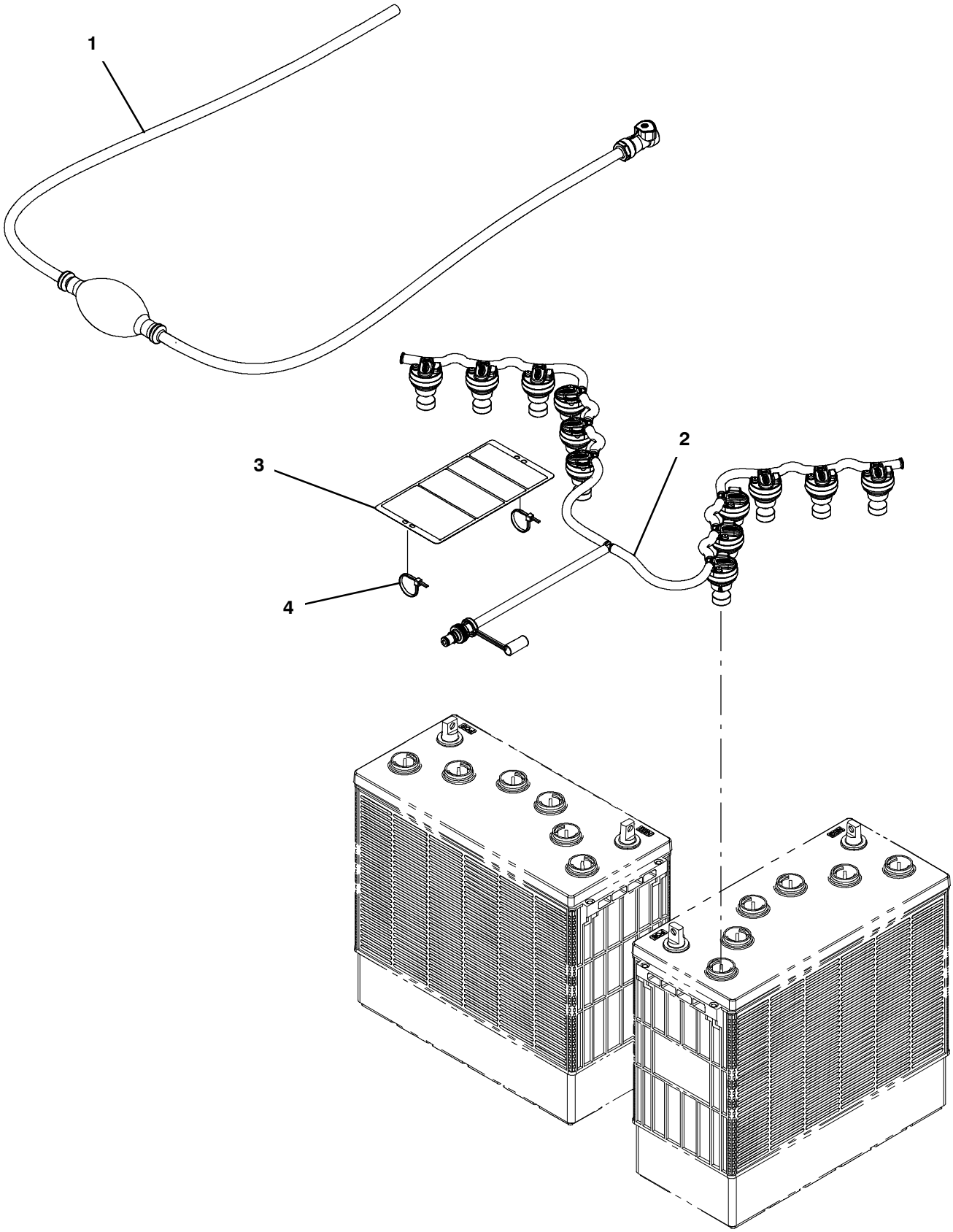

355876 - 0

Fig. 17 - Manual Battery Watering System (S/N 11029070 -)

	Ref.	Part No.	Serial Number	Description	Qty.
∇		9021729*	(11029070-)	Fill Kit, D, 12 Valve, Mnl, Ci [Trojan]	1
▲	1	1236295	(11029070-)	Pump, Hand, Battery	1
▲	2	1257801	(11029070-)	Manifold Assy, Wtr, Btry, 12vlv[Trojan]	1
▲	3	1253250	(11029070-)	Label, Tag, Battery [Bwt Watering]	1
▲	4	130773	(11029070-)	Tie, Cable, Nyl, 11.0l, .14w, 3.0 Max. D	2

*THIS KIT IS INTENDED FOR USE WITH TROJAN® LEAD ACID BATTERIES ONLY.

∇ ASSEMBLY

▲ INCLUDED IN ASSEMBLY

Fig. 18 - Steel Static Chain Kit

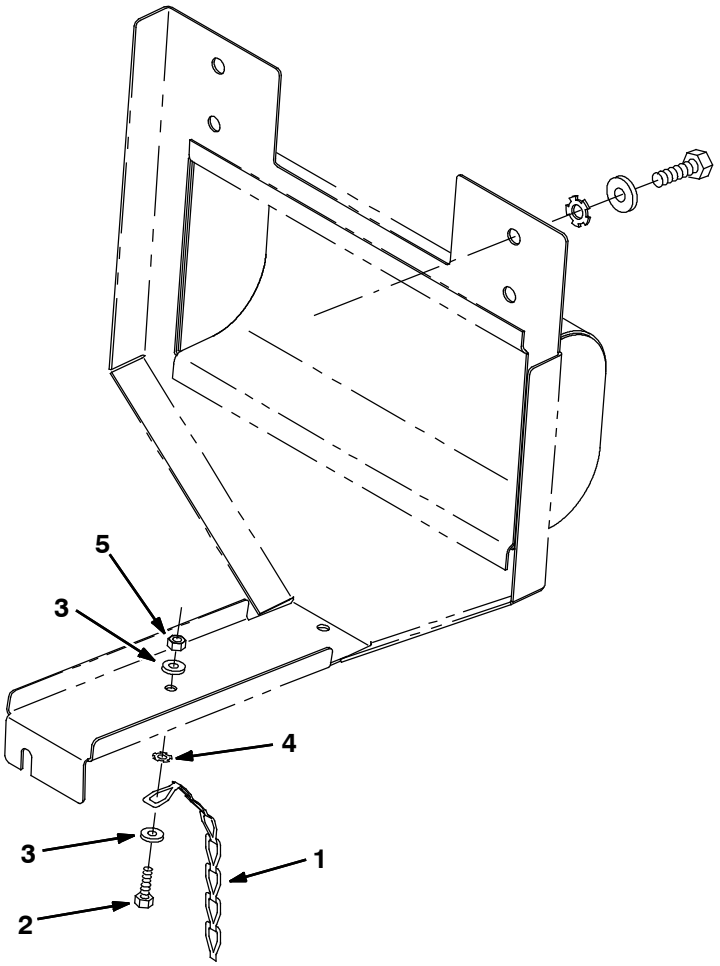

350936 - ALL

	Ref.	Part No.	Serial Number	Description	Qty.
▽		379007	(000000-)	Kit, Chain, Static, Steel	1
▲	1	46307	(000000-)	Chain, Link	1
▲	2	06943	(000000-)	Screw, Hex, M06- 1.0 X 20, 8.8	1
▲	3	32490	(000000-)	Washer, Flat, .25 Hard	2
▲	4	41141	(000000-)	Washer, Lock, Int- Ext, .31	1
▲	5	08708	(000000-)	Nut, Hex, Lock, M06	1

Fig. 19 - Battery Cutout Button Kit

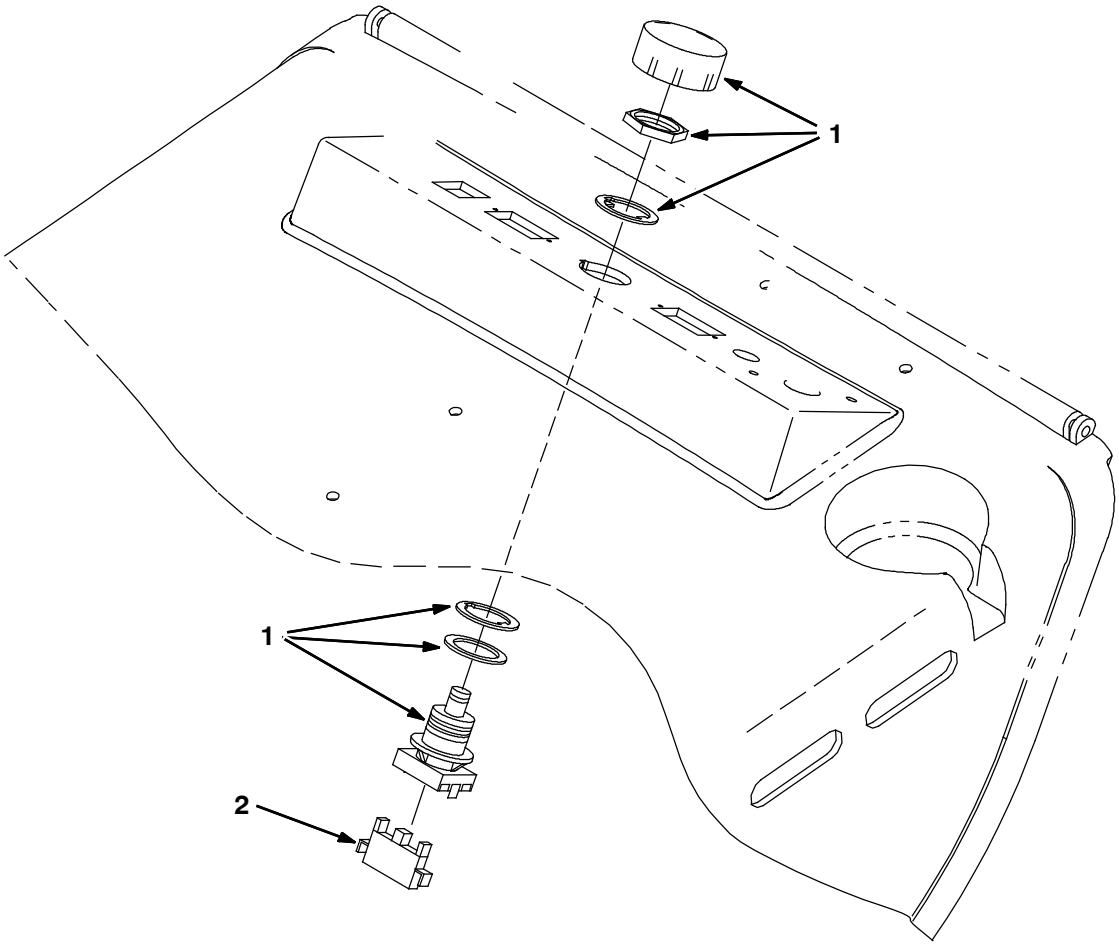

350918 - E

	Ref.	Part No.	Serial Number	Description	Qty.
▽		222664	(000000-)	Battery Cutout Button Kit	1
▲	1	78553	(000000-)	Switch, Pushbutton	1
▲	2	65665	(000000-)	Contact, Switch	1

Fig. 20 - Hinge Repair Kit

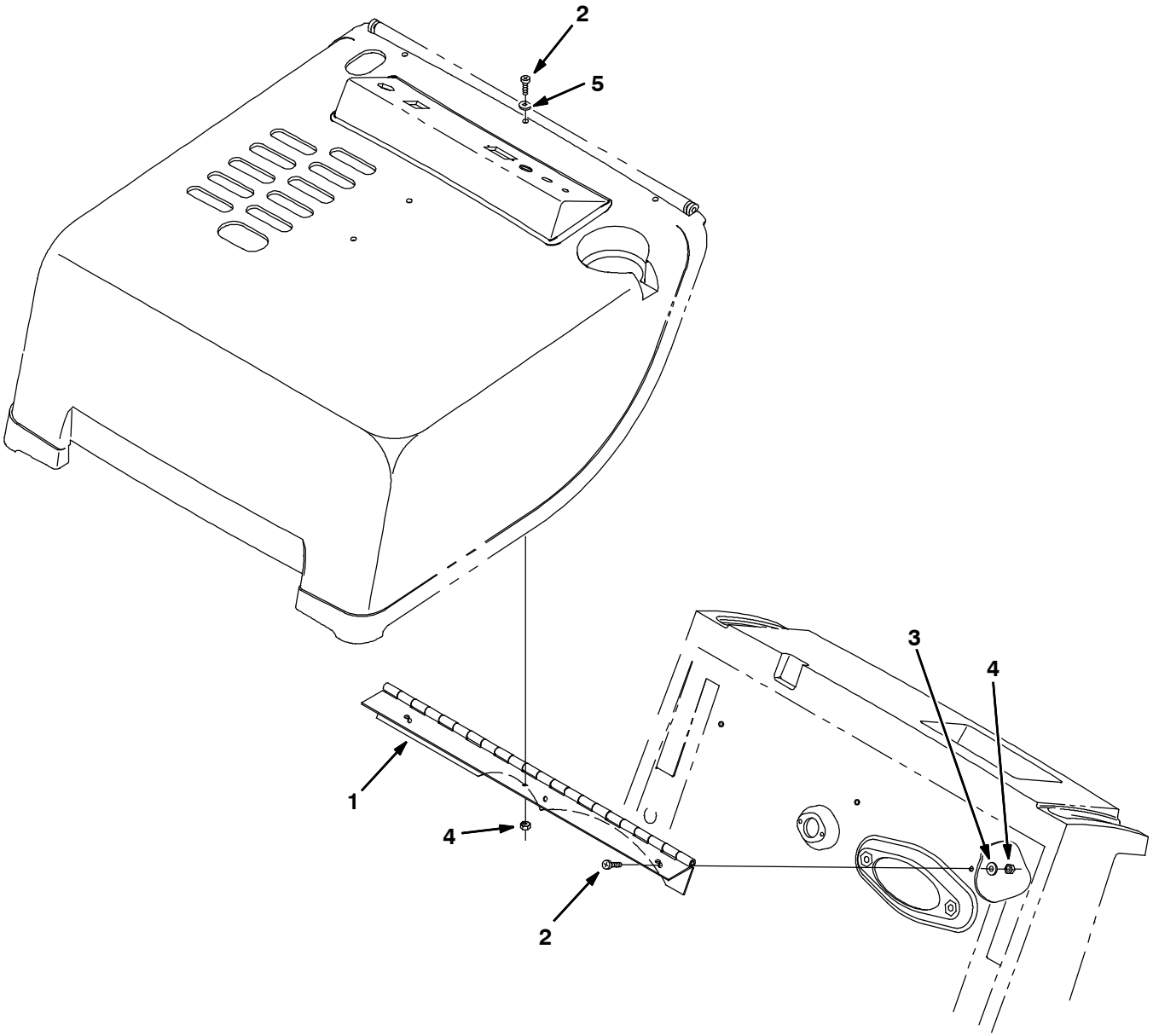

352794 - ALL

	Ref.	Part No.	Serial Number	Description	Qty.
▽		379220	(000000-)	Kit, Hinge Repair	1
▲	1	379221	(000000-)	Hinge, Cover, 6080	1
▲	2	363503	(000000-)	Screw, Pan, M06- 1.0 X 12, Ss	6
▲	3	32483	(000000-)	Washer, Flat, .25 Sae	3
▲	4	08708	(000000-)	Nut, Hex, Lock, M06	6
▲	5	379219	(000000-)	Washer, Flat, Rework	3

Fig. 21 - Carpet Sweeping Kits, 130AH

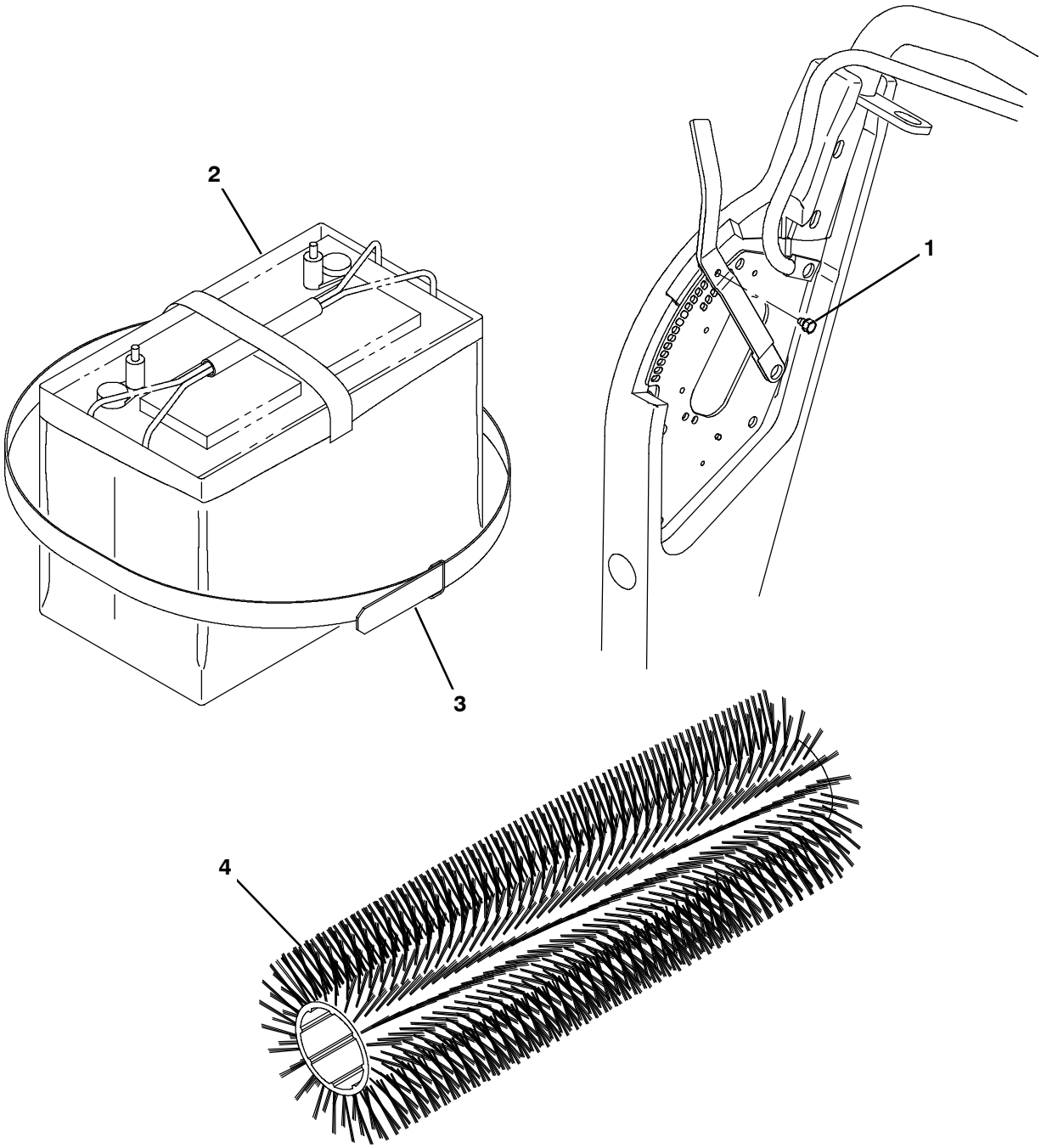

350923 - E

	Ref.	Part No.	Serial Number	Description	Qty.
▽		377388	(000000-)	Sweep Kit, Carpet, 130ah, Ci[Less Brush]	1
▲	1	80972	(000000-)	Bolt, .25- 28, Mtg, Swp, Carpet [3640]	1
▲	2	80120	(000000-)	Bag, Battery, 130ah	2
▲	3	378764	(000000-)	Strap	2
▽		377446	(000000-)	Sweep Kit, Carpet, 130ah, Ci [W/ Brush]	1
▲	1	80972	(000000-)	Bolt, .25- 28, Mtg, Swp, Carpet [3640]	1
▲	2	80120	(000000-)	Bag, Battery, 130ah	2
▲	3	378764	(000000-)	Strap	2
▲	4	80355	(000000-)	Brush, Swp, 24l, 12 Sr, Umx Carpet ,Spl	1

Fig. 22 - Carpet Sweeping Kits, 225AH

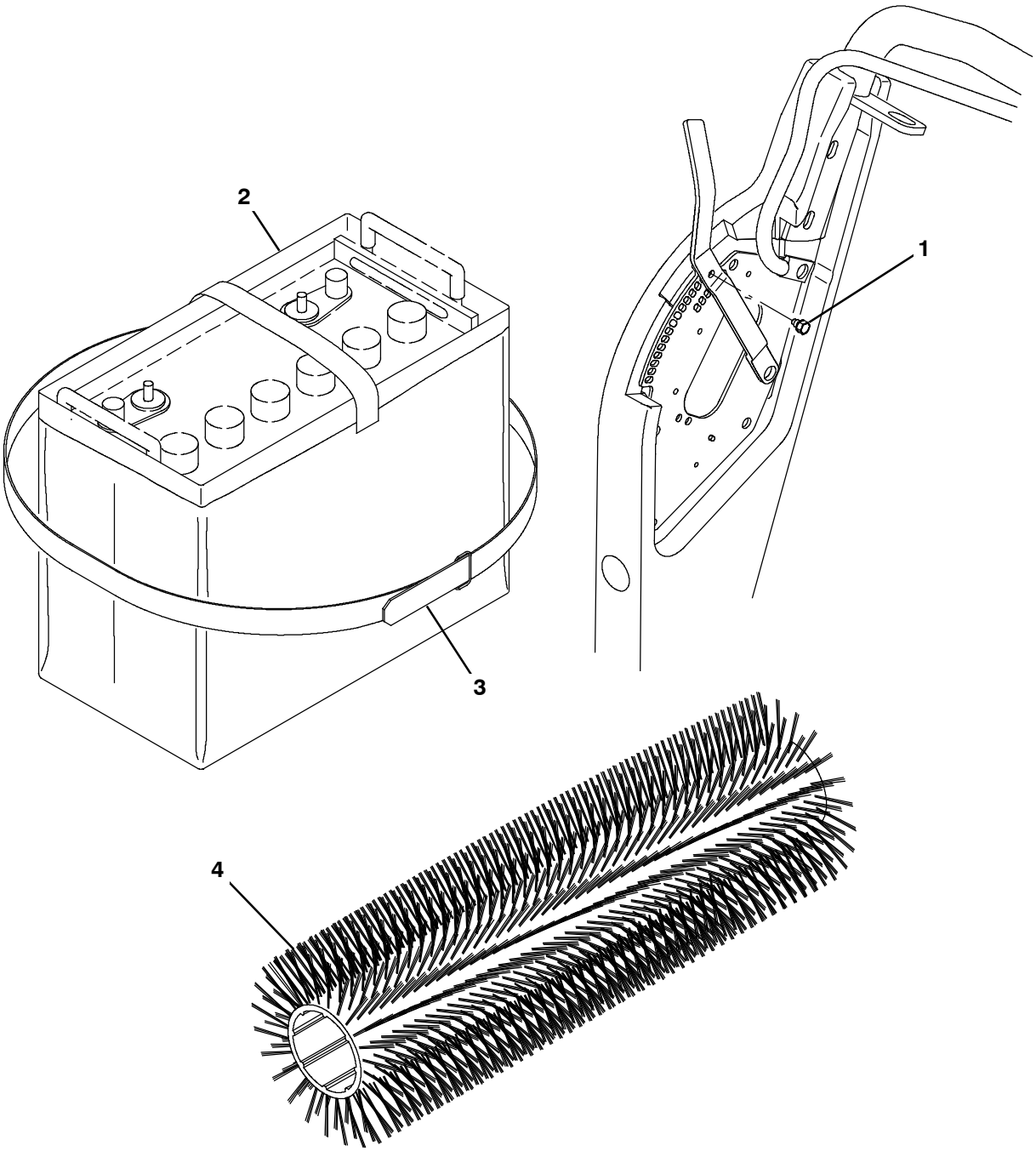

354784 - E

	Ref.	Part No.	Serial Number	Description	Qty.
▽		377424	(000000-)	Sweep Kit, Carpet, 215ah, Ci[Less Brush]	1
▲	1	80972	(000000-)	Bolt, .25- 28, Mtg, Swp, Carpet [3640]	1
▲	2	80122	(000000-)	Bag, Battery, 215ah	2
▲	3	378764	(000000-)	Strap	2
▽		377455	(000000-)	Sweep Kit, Carpet, 215ah, Ci [W/ Brush]	1
▲	1	80972	(000000-)	Bolt, .25- 28, Mtg, Swp, Carpet [3640]	1
▲	2	80122	(000000-)	Bag, Battery, 215ah	2
▲	3	378764	(000000-)	Strap	2
▲	4	80355	(000000-)	Brush, Swp, 24l, 12 Sr, Umx Carpet ,Spl	1

Fig. 23 - Main Brush Downpressure Kit

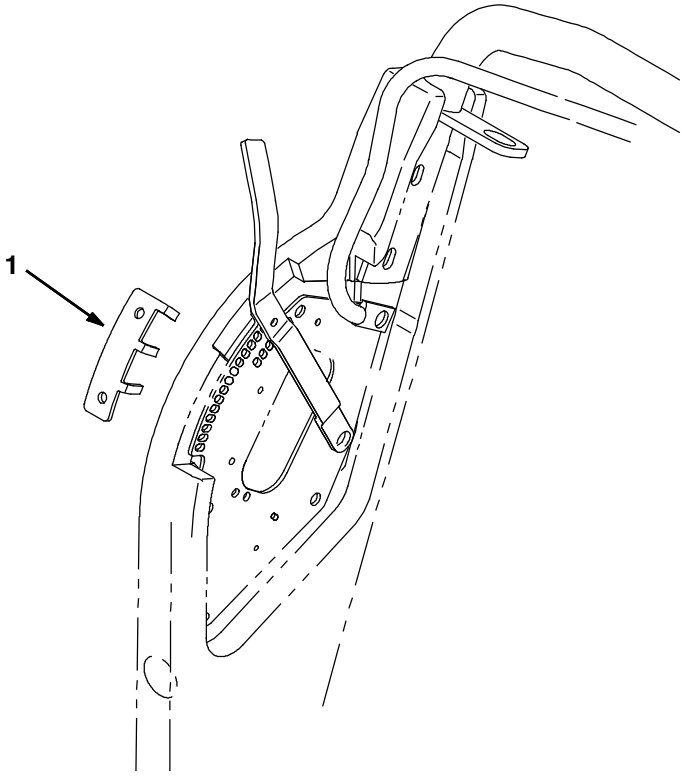

351287 - ALL

	Ref.	Part No.	Serial Number	Description	Qty.
▽		378768	(000000-)	Main Brush Downpressure Kit	1
▲	1	378765	(000000-)	Limiter, Travel, Brush	1

Fig. 24 - Documentation Group

Ref.	Part No.	Serial Number	Description	Qty.
	9014884	(000000-)	Manual, Parts [3640 Na/Intl]	1
	330560	(000000-)	Manual, Oper [3640 Ele, Na]	1
	330564	(000000-)	Manual, Oper [3640 Ele, Jp]	1
	330562	(000000-)	Manual Opmt 3640E Es	1
	330563	(000000-)	Manual Opmt 3640E Fr	1
	330565	(000000-)	Manual Service 3640 E	1
	9009350	(000000-)	Media, Cd- Rom, Oprtr [6080/3640]	1

To view, print, order, download the latest Parts manual, other language Operator manuals, and Use and Care Guides (wall charts), visit:

www.tennantco.com/manual

SECTION 4

Contents **Page**

Fig. 1 - Transaxle Breakdown, 80476 4-2

Fig. 1 - Transaxle Breakdown, 80476

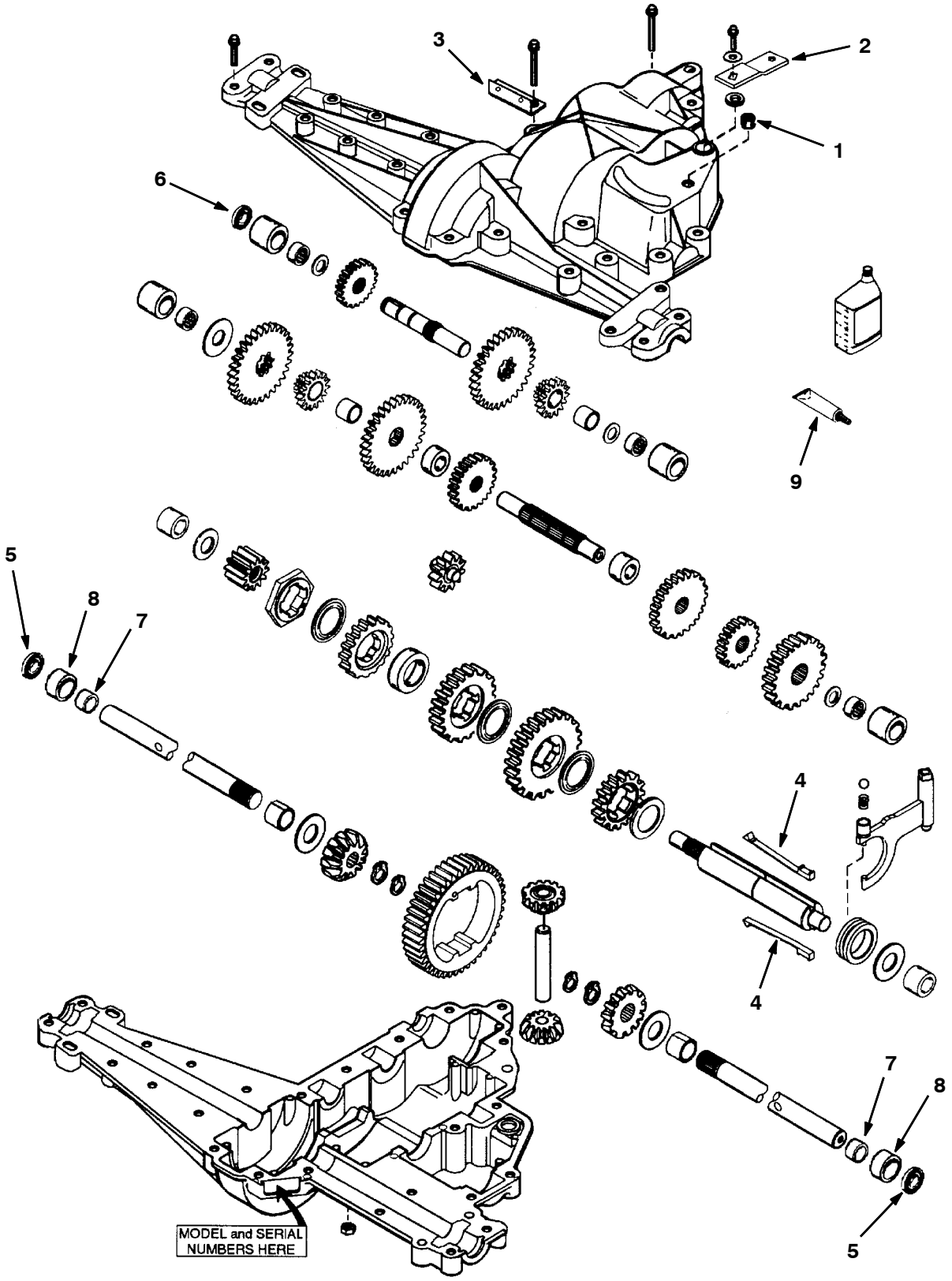

350912 - ALL

Fig. 1 - Transaxle Breakdown, 80476

	Ref.	Part No.	Serial Number	Description	Qty.
▽		80476	(000000-)	Kit, Transaxle Assy	1
▲	1	80471	(000000-)	Fitting, Relief 1/8	1
▲	2	80417	(000000-)	Lever, Shift	1
▲	3	80499	(000000-)	Bracket, Return Spring	1
▲▽		80472	(000000-)	Kit, Transaxle Repair	1
▲▲	4	80473	(000000-)	Key, Shifter Te	2
▲▲	5	80474	(000000-)	Seal, Axle Te	2
▲▲	6	80475	(000000-)	Seal, Shaft, Input Te	1
▲▲	7	80352	(000000-)	Bearing, Axle	2
▲▲	8	80353	(000000-)	Sleeve, Bearing	2
▲▲	9	08317	(000000-)	Sealant,Silastic Rtv732- 3 Oz.	1