Spare Parts List

IP Cleaning Srl - Gansow

Ref: LPTB03941
Model: FLOOR WASHER CT40 B50 MK2+CB GR/VE USA

Table: FLOOR WIPER - DBDB14481

Progressive Number: 1

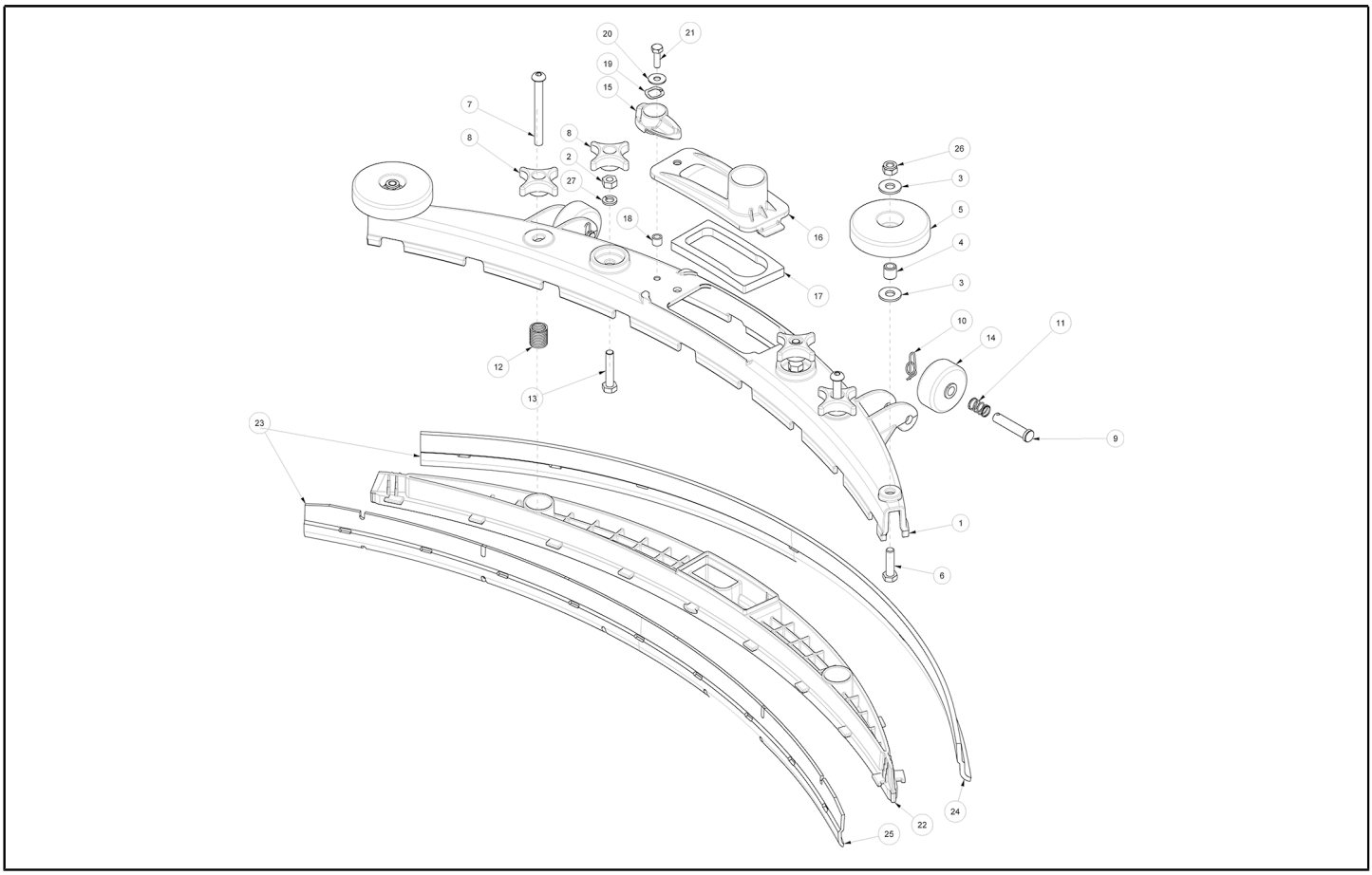

Ref. K	Part N.	Part N. 2	Description	Quantity	Validity From	Validity To	Price
0001	MFVR00341	N/A	FLOOR WIPER Sqge, 50cm, Mach [T300]	1,00			--
0002	VTDD00309	N/A	NUT Hex, Std, M8 X 1.25, Ss	2,00			--
0003	VTRS00654	N/A	WASHER Flat, 0.35b 0.75d .04, Ss	4,00			--
0004	LAFN12054	N/A	SPACER P/M, 0.32b 0.50d 0.5l [43	2,00			--
0005	RTRT00824	N/A	WHEEL Bmpr, 80d X 25w, Non- Mar	2,00			--
0006	VTVT01627	N/A	SCREW Hex, M8 X 1.25 X 30, Nl,	2,00			--
0007	VTVT01628	N/A	SCREW Btn, M8 X 1.25 X 85, Ss	2,00			--
0008	MPVR13661	N/A	SMALL KNOB Star, 2.00od 4ear M8x1.	4,00			--
0009	LAFN12055	N/A	PIN Clevis, 0.37d X 1.75l	2,00			--
0010	LAFN12057	N/A	PIN Cotter, Hair, 0.38d .054	2,00			--
0011	MLML00554	N/A	SPRING Cmpr, 0.50od .04wir 00.8l	2,00			--
0012	MLML00555	N/A	SPRING Cmpr, 0.72od .06wir 02.3l	2,00			--
0013	VTVT01629	N/A	SCREW Hex, M8 X 1.25 X 40, Ss	2,00			--
0014	RTRT00825	N/A	WHEEL Pyu, 02.0d 0.38w, Gray	2,00			--
0015	MPVR13662	N/A	SMALL KNOB Sqge, 58l, M6 X 1.00, Pls	1,00			--
0016	MPVR13663	N/A	COVERING Trap, Water, Sqge	1,00			--
0017	GUGO00754	N/A	GASKET Trap, Water, Sqge	1,00			--
0018	LAFN12061	N/A	SPACER P/M, 0.25b 0.38d	1,00			--
0019	VTRS00655	N/A	WASHER .505 X .750 X 0.45 Wave	1,00			--
0020	VTRS00656	N/A	WASHER 0.27b 0.69d .05, Ss	1,00			--
0021	VTVT01630	N/A	SCREW Hex, M6 X 1.00 X 20, Nl,	1,00			--
0022	MPVR13664	N/A	SUPPORT Sqge [T300]	1,00			--
0023	MPVR13665	N/A	BLADE Kit, 500mm, Linatex (Stan	1,00			--
0024	MPVR13666	N/A	BLADE Sqge, Rear, 836l, Linatex	1,00			--
0025	MPVR13667	N/A	BLADE Sqge, Front, 788l, Linate	1,00			--
0026	VTDD01701	N/A	NUT M8 INOX+ZIN.	2,00			--
0027	VTRS15146	N/A	WASHER GROVER A2 UNI1751	2,00			--

Table: RECOVERY TANK - DBDB14907

Progressive Number: 1

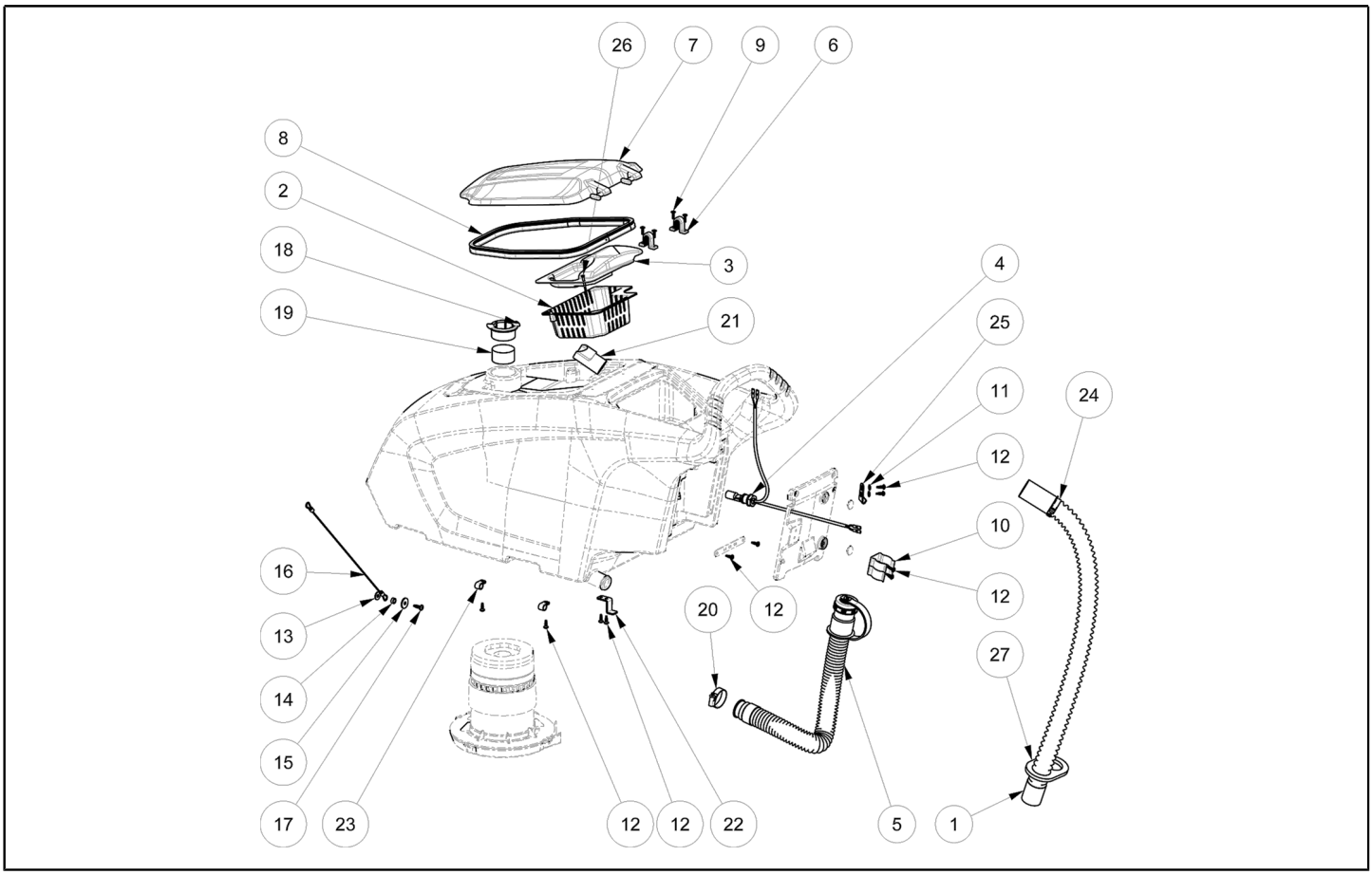

Ref. K	Part N.	Part N. 2	Description	Quantity	Validity From	Validity To	Price
0001	TBFX01386	N/A	HOSE SQUEEGEE CT 40 ECO	1,00			--
0002	MPVR13845	N/A	SMALL BASKET .	1,00			--
0003	MPVR13846	N/A	COVER .	1,00			--
0004	MECI00592	N/A	SENSOR SOLUTION TANK CT51-71	1,00			--
0005	TBFX01299	N/A	HOSE DRAIN PU MY'21 CT40/70/90	1,00			--
0006	MPVR12085	N/A	HINGE 416S	2,00			--
0007	MPVR13841	N/A	COVER RECOVERY TANK	1,00			--
0008	GUVR00646	N/A	GASKET RECOVERY TANK LID	1,00			--
0009	VTVT01071	N/A	SCREW STS KN1031-Neu 4x16 - H2	4,00			--
0010	MPVR46988	N/A	CLIP FIXATION DRAIN HOSE	1,00			--
0011	VTRS00017	N/A	WASHER STEEL INOX 4X12	2,00			--
0012	VTVT01072	N/A	SCREW STS KN1038 5x16 - T20 A2	10,00			--
0013	VTRS13945	N/A	WASHER D. 6X18 INX UNI 6593	1,00			--
0014	LAFN03940	N/A	BUSHING 8/12-5,25	1,00			--
0015	VTRS16937	N/A	WASHER 6x24 INOX UNI 6593	1,00			--
0016	CMCV00495	N/A	CABLE	1,00			--
0017	VTVT01591	N/A	SCREW STS KN1038 6x20 - T25 A2	1,00			--
0018	MPVR13847	N/A	FILTER .	1,00			--
0019	FTDP00927	N/A	FILTER VACUUM MOTOR	1,00			--
0020	FSVR00095	N/A	CLAMP WORMDRIVE d.32-50	1,00			--
0021	MPVR14073	N/A	CONVEYOR	1,00			--
0022	LAFN12215	N/A	BRACKET .	1,00			--
0023	MPVR06571	N/A	CLAMP -	2,00			--
0024	MPVR06119	N/A	CLAMP INDICATION , YELLOW	1,00			--
0025	LAFN12477	N/A	HOOK .	1,00			--
0026	MPVR14074	N/A	CABLE	1,00			--
0027	MPVR04659	N/A	FLANGE	1,00			--

Table: MAIN HARNESS - DBDB14908

Progressive Number: 1

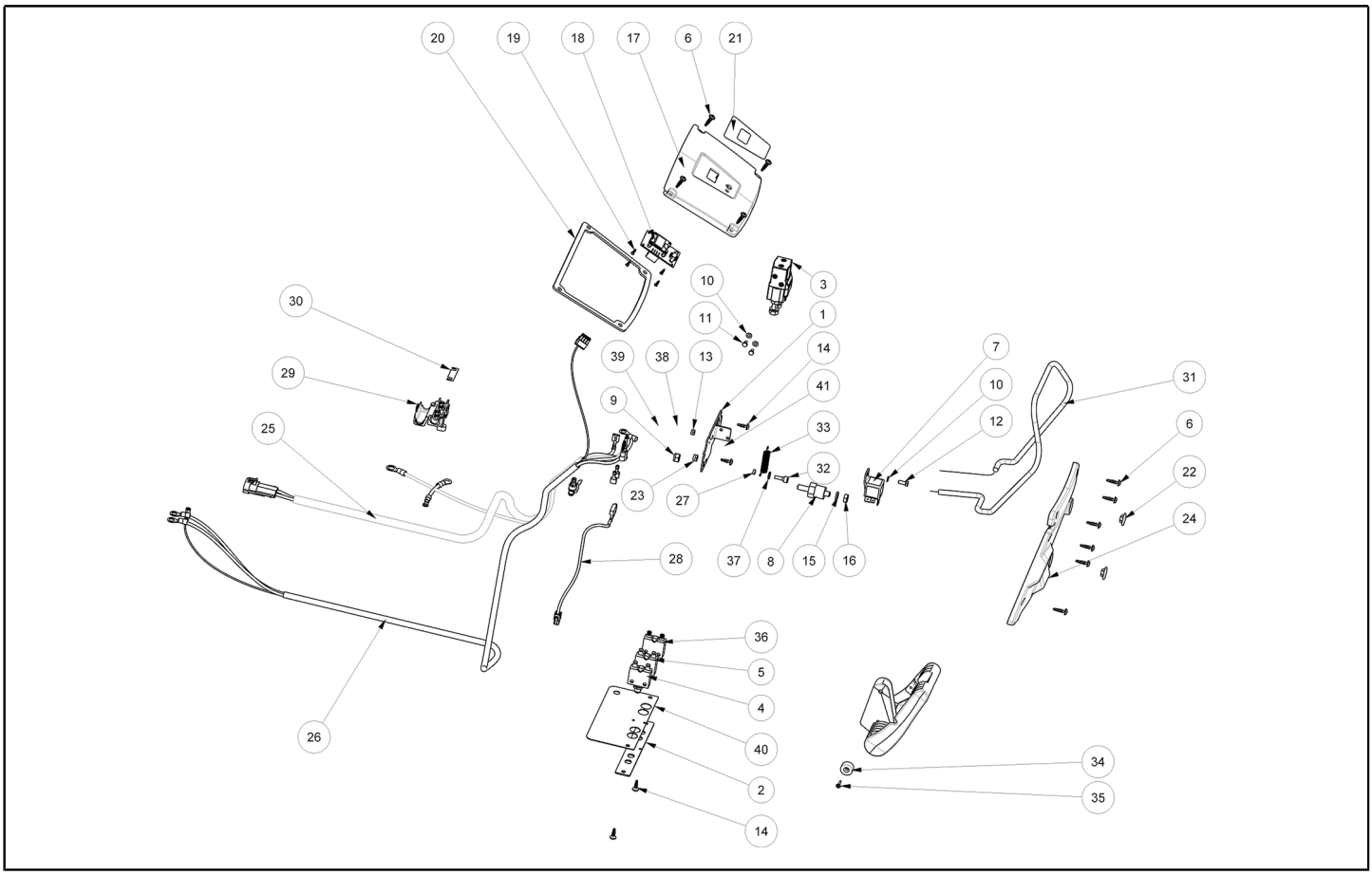

Ref. K	Part N.	Part N. 2	Description	Quantity	Validity From	Validity To	Price
0001	LAFN12206	N/A	BRACKET .	1,00			--
0002	LAFN12207	N/A	BRACKET .	1,00			--
0003	METT00085	N/A	CONTACTOR 100A	1,00			--
0004	METT00128	N/A	FUSE 3A	1,00			--
0005	METT00159	N/A	FUSE CIRCUIT BREAKER 20A	1,00			--
0006	VTVT01743	N/A	SCREW STS KN1038 5X20 - T20 A2	10,00			--
0007	MECE00995	N/A	BOARD RELAY 24V 80A FASTON	1,00			--
0008	MEVR01116	N/A	SUPPORT FUSIBILE 120 A	1,00			--
0009	VTDD01701	N/A	NUT M8 INOX+ZIN.	1,00			--
0010	VTRS00515	N/A	WASHER D. 4 INX	3,00			--
0011	VTVT00004	N/A	SCREW TE UNI 5739 4X8 ZB	2,00			--
0012	VTVT01300	N/A	SCREW TE M5X12 INOX	1,00			--
0013	VTDD01693	N/A	NUT M 5 INX	1,00			--
0014	VTVT01072	N/A	SCREW STS KN1038 5x16 - T20 A2	4,00			--
0015	VTRS15146	N/A	WASHER GROVER A2 UNI1751	3,00			--
0016	VTDD00530	N/A	NUT M8 UNI 5589	1,00			--
0017	MPVR13842	N/A	BOARD .	1,00			--
0018	MECE00996	N/A	BOARD CT40 B ECO	1,00			--
0019	VTVT01494	N/A	SCREW TC+ M.3,5-10	4,00			--
0020	GUGO00779	N/A	GASKET Ø4 X500	1,00			--
0021	ETET18420	N/A	LABEL .	1,00			--
0022	MPVR13860	N/A	CAP .	2,00			--
0023	VTDD01700	N/A	NUT M6 INOX+ZIN.	1,00			--
0024	MPVR13844	N/A	COVER .	1,00			--
0025	MECB02440	N/A	WIRING CT40 MY2024 ASP BATT	1,00			--
0026	MECB02457	N/A	CABLE CT40B MY2024	1,00			--
0027	LAFN11383	N/A	SPACER .	1,00			--
0028	MECI00626	N/A	SENSOR SQUEEGEE POSIT. CT51	1,00			--
0029	MEVR02992	N/A	FUSE-HOLDER	1,00			--
0030	MEVR00604	N/A	FUSE STRIP 80A	1,00			--
0031	LAFN12208	N/A	LEVER .	1,00			--
0032	VTVT00717	N/A	SCREW TCEI M. 6-16	1,00			--
0033	MLML00196	N/A	SPRING PER GIUNTO HS NADIR	1,00			--
0034	MEVR02381	N/A	MAGNET SQUEEGEE LEVER CT51	1,00			--
0035	VTVT17357	N/A	SCREW TSP-TC 3.9X16 UNI6955	1,00			--
0036	METT00132	N/A	FUSE CIRCUIT BREAKER 30A	1,00			--
0037	VTRS00245	N/A	WASHER D.6 UNI 6592 INOX	1,00			--
0038	MECI00588	N/A	MICROSWITCH -	1,00			--
0039	VTDD00213	N/A	NUT M2	2,00			--
0040	MPVR14075	N/A	COVERING	1,00			--
0041	VTVT01592	N/A	SCREW TC 2X12	2,00			--

Table: FRAME - DBDB14911

Progressive Number: 1

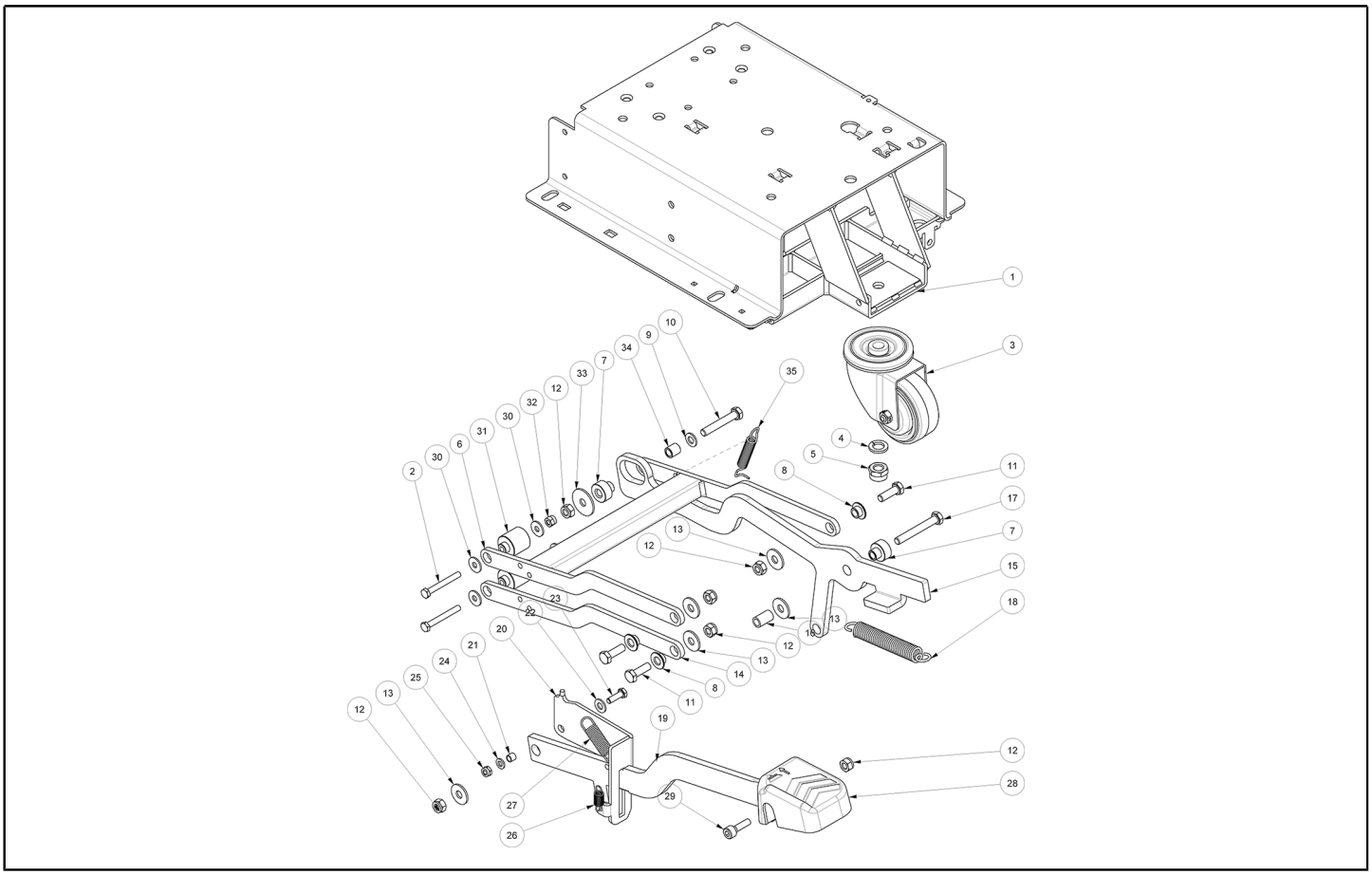

Ref. K	Part N.	Part N. 2	Description	Quantity	Validity From	Validity To	Price
0001	LAFN12293	N/A	SHEET METAL PA.	1,00			--
0002	VTVT15515	N/A	SCREW TE M 6X 50 INOX A2	2,00			--
0003	RTRT00518	N/A	WHEEL CASTOR D.80X30	1,00			--
0004	VTRS15919	N/A	WASHER D.12 GROVER UNI 1751 INX	1,00			--
0005	VTDD00176	N/A	NUT M.12 INOX A2 BASSO AUTOB.	1,00			--
0006	LAFN06388	N/A	ARM TESTATA SUPERIORE	1,00			--
0007	LAFN04190	N/A	BUSHING PARALLELOGR.TEST.GR.	2,00			--
0008	LAFN06391	N/A	BUSHING BRUSH DECK SUPPORT	3,00			--
0009	VTRS13947	N/A	WASHER D. 8 INX UNI 6592	1,00			--
0010	VTVT15917	N/A	SCREW TE M 8X50 INOX A2 UNI	1,00			--
0011	VTVT15907	N/A	SCREW TE 8X25 UNI5739 INX	3,00			--
0012	VTDD01701	N/A	NUT M8 INOX+ZIN.	6,00			--
0013	VTRS13946	N/A	WASHER D. 8 X24 INX UNI 6593	5,00			--
0014	LAFN06389	N/A	ARM PARALLELOGRAMMA	1,00			--
0015	LAFN12298	N/A	LEVER	1,00			--
0016	LAFN14110	N/A	BUSHING 8.2X12 H=20	1,00			--
0017	VTVT01009	N/A	SCREW 8X60	1,00			--
0018	MLML31130	N/A	SPRING D. 17.5 X110 N38	1,00			--
0019	LAFN12299	N/A	LEVER	1,00			--
0020	LAFN12295	N/A	BRACKET	1,00			--
0021	LAFN03840	N/A	BUSHING	1,00			--
0022	VTRS00274	N/A	WASHER NYLON 66 D.8,4-17-2 UNI	1,00			--
0023	VTVT13939	N/A	SCREW TE 6X20 UNI5739 INX	1,00			--
0024	VTRS00245	N/A	WASHER D.6 UNI 6592 INOX	1,00			--
0025	VTDD01700	N/A	NUT M6 INOX+ZIN.	1,00			--
0026	MLML00303	N/A	SPRING L=54,1 D.=9,4	1,00			--
0027	MLML34726	N/A	SPRING TR E350 N	1,00			--
0028	MPVR06471	N/A	PEDAL HEAD LIFTING	1,00			--
0029	VTVT00639	N/A	SCREW TCEI 8X25	1,00			--
0030	VTRS13945	N/A	WASHER D. 6X18 INX UNI 6593	4,00			--
0031	LAFN12309	N/A	SPACER	2,00			--
0032	VTDD01699	N/A	NUT M6 INOX+ZINC.B.	2,00			--
0033	VTRS16323	N/A	WASHER D. 8 X32 UNI 6593 INX	1,00			--
0034	RCDS31040	N/A	BUSHING D. 8X 12X13	1,00			--
0035	MLML00568	N/A	SPRING CT40 MK2	1,00			--

Table: BATTERY CHARGER - DBDB14912

Progressive Number: 1

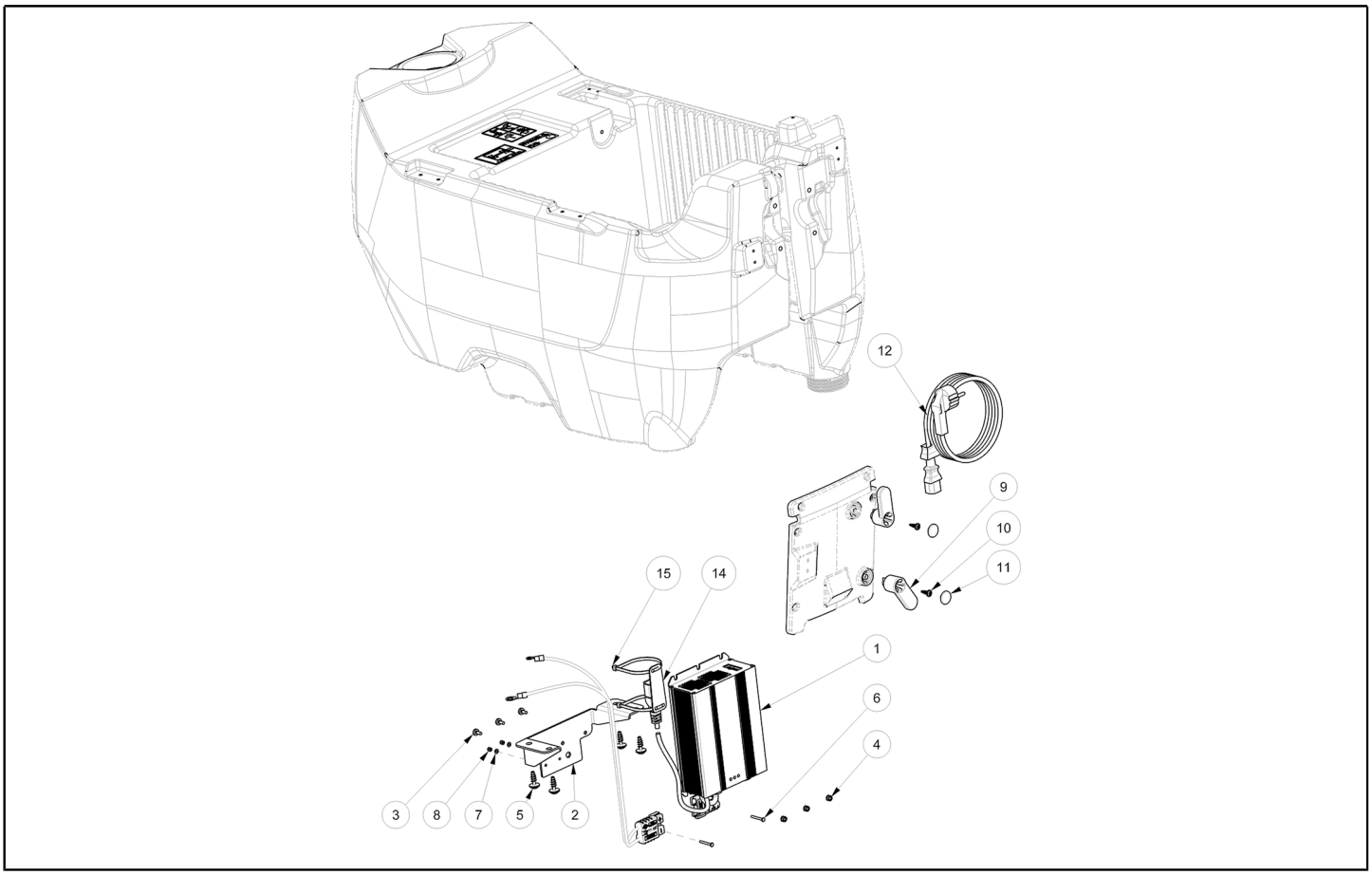

Ref. K	Part N.	Part N. 2	Description	Quantity	Validity From	Validity To	Price
0001	BACA00337	N/A	BATTERY-CHARGER 24VDC 15A 100-240V OB	1,00			--
0002	LAFN12213	N/A	BRACKET .	1,00			--
0003	VTVT07521	N/A	SCREW TCB 5X10	3,00			--
0004	VTDD01693	N/A	NUT M 5 INX	3,00			--
0005	VTVT01430	N/A	SCREW STS KN1038 8x22 - T40 A2	4,00			--
0006	VTVT00021	N/A	SCREW TE UNI 5739 3X25 ZB	2,00			--
0007	VTRS00385	N/A	WASHER UNI 6592 3,2X7X0,5 INOX	2,00			--
0008	VTDD00210	N/A	NUT M 3 AUTOBL.DIN 985 IX.A2	2,00			--
0009	MPVR13859	N/A	HOOK CABLE SUPPORT	2,00			--
0010	VTVT01072	N/A	SCREW STS KN1038 5x16 - T20 A2	2,00			--
0011	MPVR13860	N/A	CAP .	2,00			--
0012	MECB00922	N/A	EXTENSION 3x0,75 SHUKO PLUG	1,00			--
0012	MECB02195	N/A	PLUG EXTENSION SAUDI ARABIA PLUG	1,00			--
0012	MECB00923	N/A	EXTENSION AWG18 US PLUG	1,00			--
0012	MECB02065	N/A	EXTENSION AS/NZS-IEC	1,00			--
0012	MECB02036	N/A	EXTENSION 3x0,75 UK PLUG	1,00			--
0014	MPVR11197	N/A	PLATE POWER CORD HOLDER	1,00			--
0015	FSVR00049	N/A	CLAMP 4,5x200 black	2,00			--

Table: WHEEL - DBDB14913

Progressive Number: 1

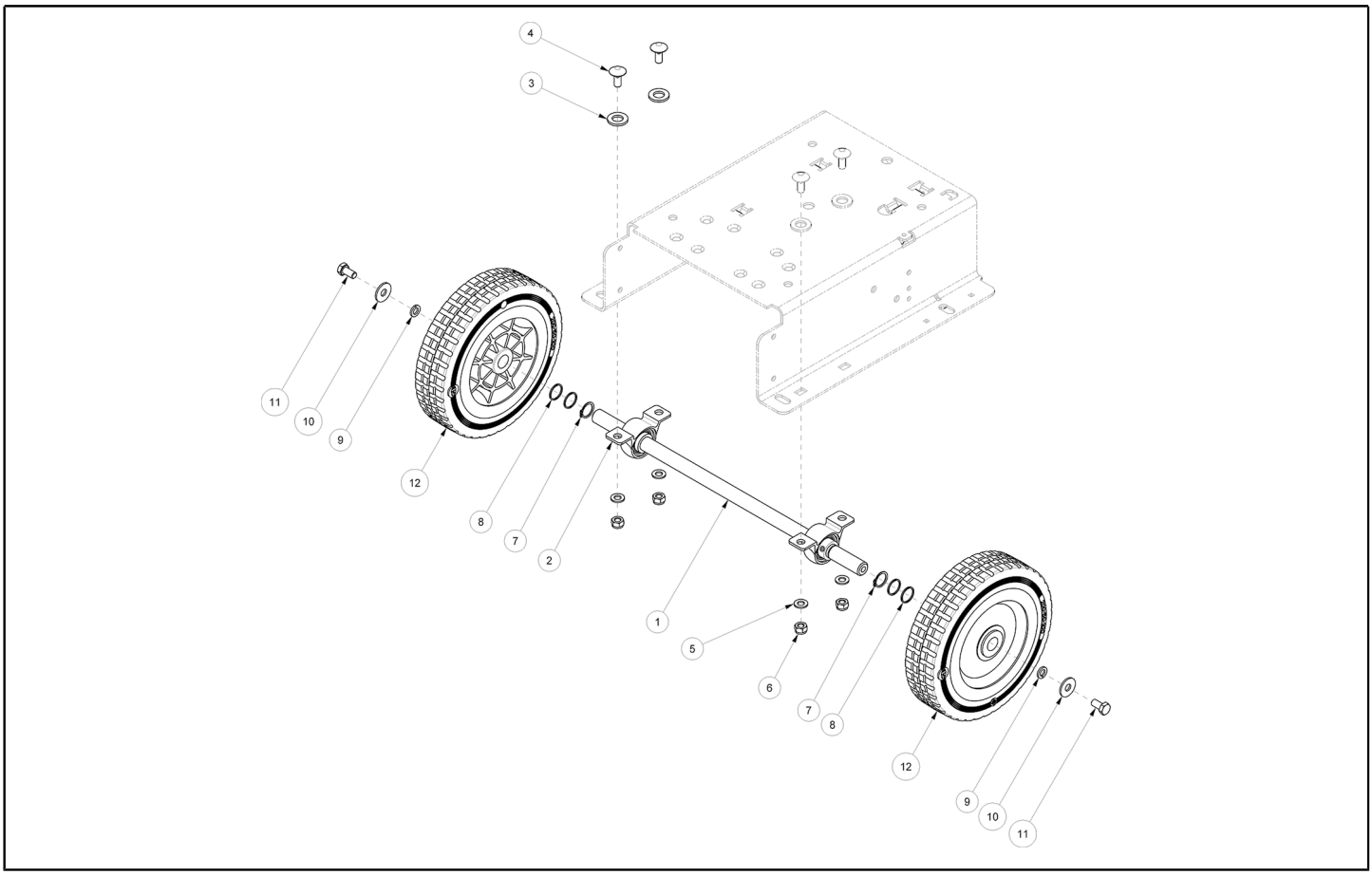

Ref. K	Part N.	Part N. 2	Description	Quantity	Validity From	Validity To	Price
0001	ALTR00088	N/A	AXLE WHEELS CT40-55	1,00			--
0002	CUVR49833	N/A	BALL BEARING SBPP 203	2,00			--
0003	VTRS15978	N/A	WASHER D.12X24 UNI 6592 INX	4,00			--
0004	VTVT00842	N/A	SCREW	4,00			--
0005	VTRS13947	N/A	WASHER D. 8 INX UNI 6592	4,00			--
0006	VTDD01701	N/A	NUT M8 INOX+ZIN.	4,00			--
0007	VTAE00065	N/A	RING D17 UNI7435 INOX	2,00			--
0008	VTRS00378	N/A	WASHER 17,5X32X1,5	4,00			--
0009	VTRS15146	N/A	WASHER GROVER A2 UNI1751	2,00			--
0010	VTRS13946	N/A	WASHER D. 8 X24 INX UNI 6593	2,00			--
0011	VTVT15916	N/A	SCREW TE M 8X 16 UNI 5739 A2	2,00			--
0012	RTRT00366	N/A	WHEEL D200 X CLT 40	2,00			--

Table: HEAD - DBDB14915

Progressive Number: 1

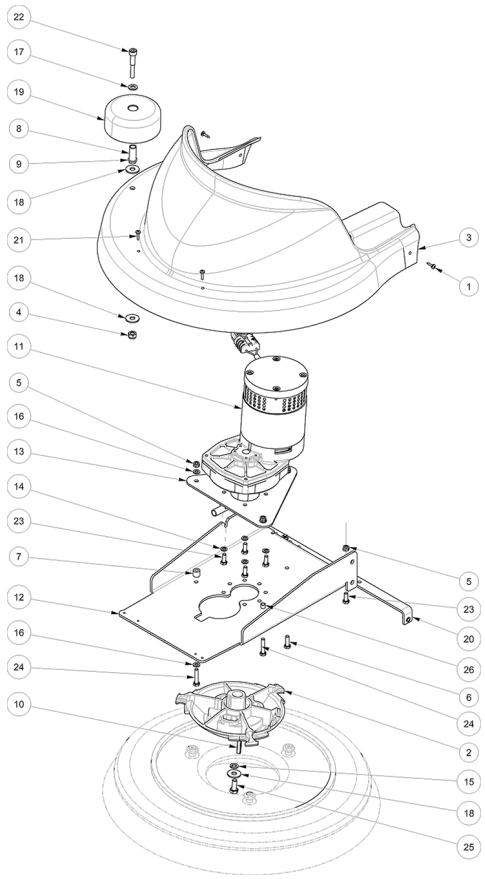

Ref. K	Part N.	Part N. 2	Description	Quantity	Validity From	Validity To	Price
0001	VTVT01158	N/A	SCREW M4x16	2,00			--
0002	MFVR00327	N/A	DRIVE DISK CONICAL ALUM.	1,00			--
0003	MPVR14071	N/A	COVERING	1,00			--
0004	VTDD01701	N/A	NUT M8 INOX+ZIN.	1,00			--
0005	VTDD01700	N/A	NUT M6 INOX+ZIN.	5,00			--
0006	VTVT00433	N/A	SCREW TE M 6X 30 UNI 5739 INX	1,00			--
0007	LAFN07541	N/A	SPACER -	1,00			--
0008	LAFN11995	N/A	SPACER LOLY 700	1,00			--
0009	GUGO00164	N/A	GASKET	1,00			--
0010	VTVR16617	N/A	KEY 6X 6X30 UNI 6604	1,00			--
0011	MOCC00549	N/A	MOTOR BRUSH	1,00			--
0012	LAFN12294	N/A	BRACKET	1,00			--
0013	LAFN12153	N/A	PLATE .	1,00			--
0014	VTRS15144	N/A	WASHER D. 6 INX GRW UNI 1751	4,00			--
0015	VTRS15146	N/A	WASHER GROVER A2 UNI1751	1,00			--
0016	VTRS00245	N/A	WASHER D.6 UNI 6592 INOX	6,00			--
0017	VTRS13947	N/A	WASHER D. 8 INX UNI 6592	1,00			--
0018	VTRS13946	N/A	WASHER D. 8 X24 INX UNI 6593	3,00			--
0019	RTRT00510	N/A	WHEEL BUMPER RAL7040	1,00			--
0020	LAFN05899	N/A	SUPPORT BRACKET CARTER 1 EXTREME	1,00			--
0021	VTVT01004	N/A	SCREW TC+ M4 X 10 TRILOBATA	2,00			--
0022	VTVT09650	N/A	SCREW TCEI 8X50 UNI5931	1,00			--
0023	VTVT15143	N/A	SCREW TE 6X16 UNI5739	6,00			--
0024	VTVT00433	N/A	SCREW TE M 6X 30 UNI 5739 INX	2,00			--
0025	VTVT13938	N/A	SCREW TE 8X20 UNI5739 INX	1,00			--
0026	LAFN03840	N/A	BUSHING	1,00			--

Table: MOTOR VACUUM - DBDB14916

Progressive Number: 1

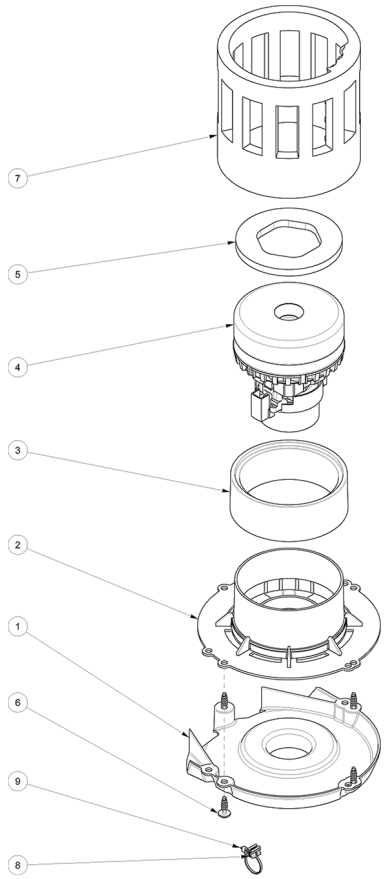

Ref. K	Part N.	Part N. 2	Description	Quantity	Validity From	Validity To	Price
0001	MPVR06480	N/A	COVERING VACUUM MOTOR CT51-71	1,00			--
0002	MPVR13524	N/A	BAFFLE .	1,00			--
0003	GUGO00733	N/A	GASKET -	1,00			--
0004	MOCC00548	N/A	MOTOR VACUUM	1,00			--
0004	MEVR03043	N/A	CARBON .	1,00			--
0005	GUGO00509	N/A	GASKET VACUUM MOTOR CT51-71	1,00			--
0006	VTVT01427	N/A	SCREW STS KN1038 8x25 - T40 A2	4,00			--
0007	ITSO00112	N/A	SOUND-PROOFING .	1,00			--
0008	MECE00839	N/A	BASE CLAMP	1,00			--
0009	FSVR00052	N/A	CLAMP 2,5X100	1,00			--

Table: SOLUTION TANK - DBDB14917

Progressive Number: 1

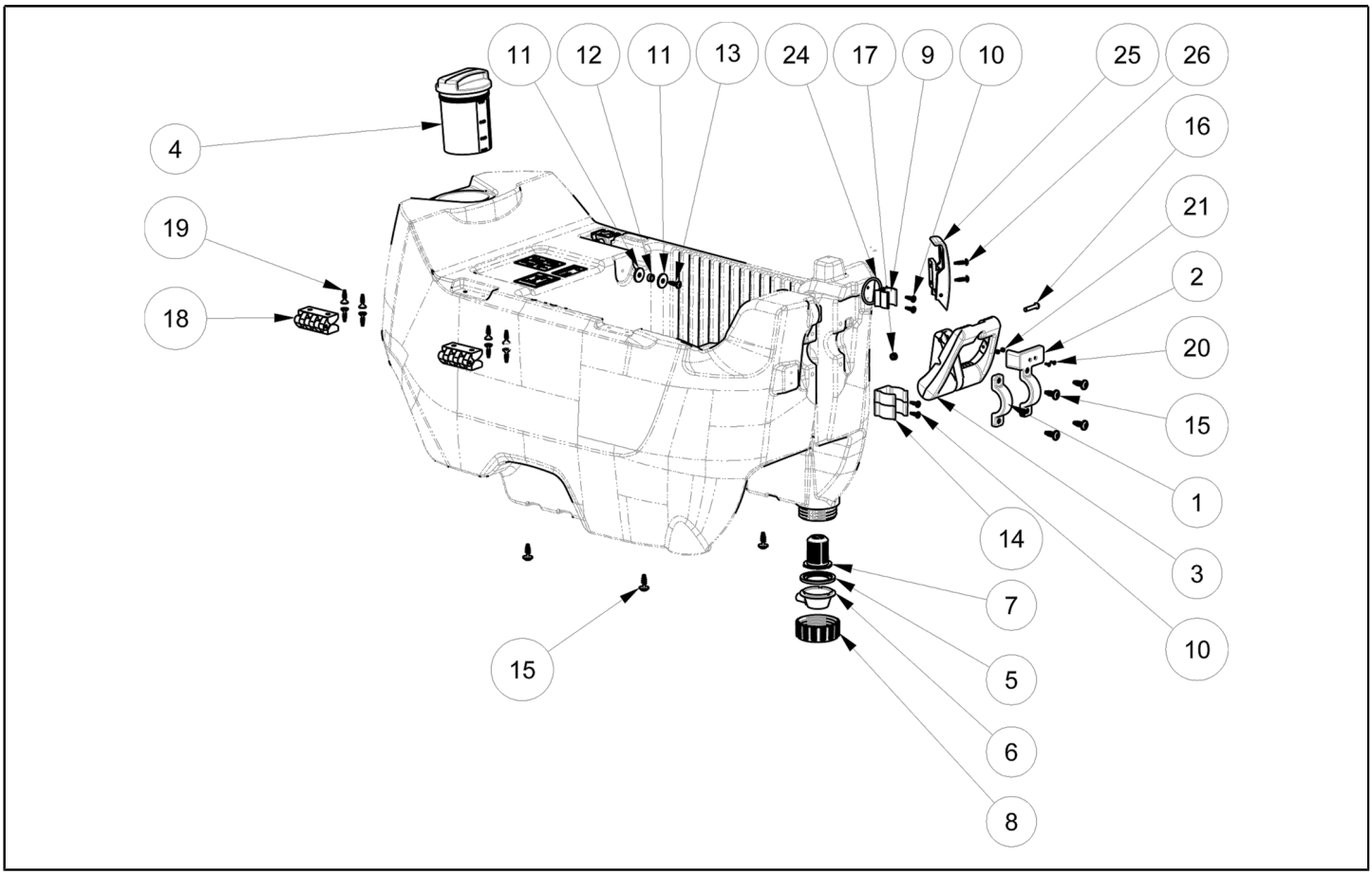

Ref. K	Part N.	Part N. 2	Description	Quantity	Validity From	Validity To	Price
0001	MPVR06470	N/A	PLATE -	1,00			--
0002	MPVR10564	N/A	SUPPORT -	1,00			--
0003	MPVR06469	N/A	HANDLE SQUEEGEE LIFTING CT51-71	1,00			--
0004	MPVR11497	N/A	CAP SOLUTION TANK	1,00			--
0005	GUGO00764	N/A	GASKET -	1,00			--
0006	MPVR10566	N/A	HOSE FITTING SOLUTION FILTER CT51	1,00			--
0007	MPVR13968	N/A	FILTER INOX MESCH 80	1,00			--
0008	MPVR06561	N/A	CAP SOLUTION TANK CT51-71	1,00			--
0009	MPVR05996	N/A	CLIP -	1,00			--
0010	VTVT01072	N/A	SCREW STS KN1038 5x16 - T20 A2	4,00			--
0011	VTRS16937	N/A	WASHER 6x24 INOX UNI 6593	2,00			--
0012	LAFN03940	N/A	BUSHING 8/12-5,25	1,00			--
0013	VTVT01591	N/A	SCREW STS KN1038 6x20 - T25 A2	1,00			--
0014	MPVR46988	N/A	CLIP FIXATION DRAIN HOSE	1,00			--
0015	VTVT01430	N/A	SCREW STS KN1038 8x22 - T40 A2	8,00			--
0016	VTVT01714	N/A	SCREW TBEI 6X30	1,00			--
0017	VTDD01700	N/A	NUT M6 INOX+ZIN.	1,00			--
0018	MPVR13865	N/A	HINGE .	2,00			--
0019	VTVT01654	N/A	SCREW STP41 6x22 -T30 A2	8,00			--
0020	VTVT01070	N/A	SCREW TSTC M3X8	2,00			--
0021	VTDD00210	N/A	NUT M 3 AUTOBL.DIN 985 IX.A2	2,00			--
0024	GUGO00290	N/A	GASKET OR (G10052)	1,00			--
0025	PMVR06535	N/A	HOOK PLAST.COMPL. GI-VAC	1,00			--
0026	VTVT01743	N/A	SCREW STS KN1038 5X20 - T20 A2	2,00			--

Table: SUPPORT SQUEEGEE - DBDB14918

Progressive Number: 1

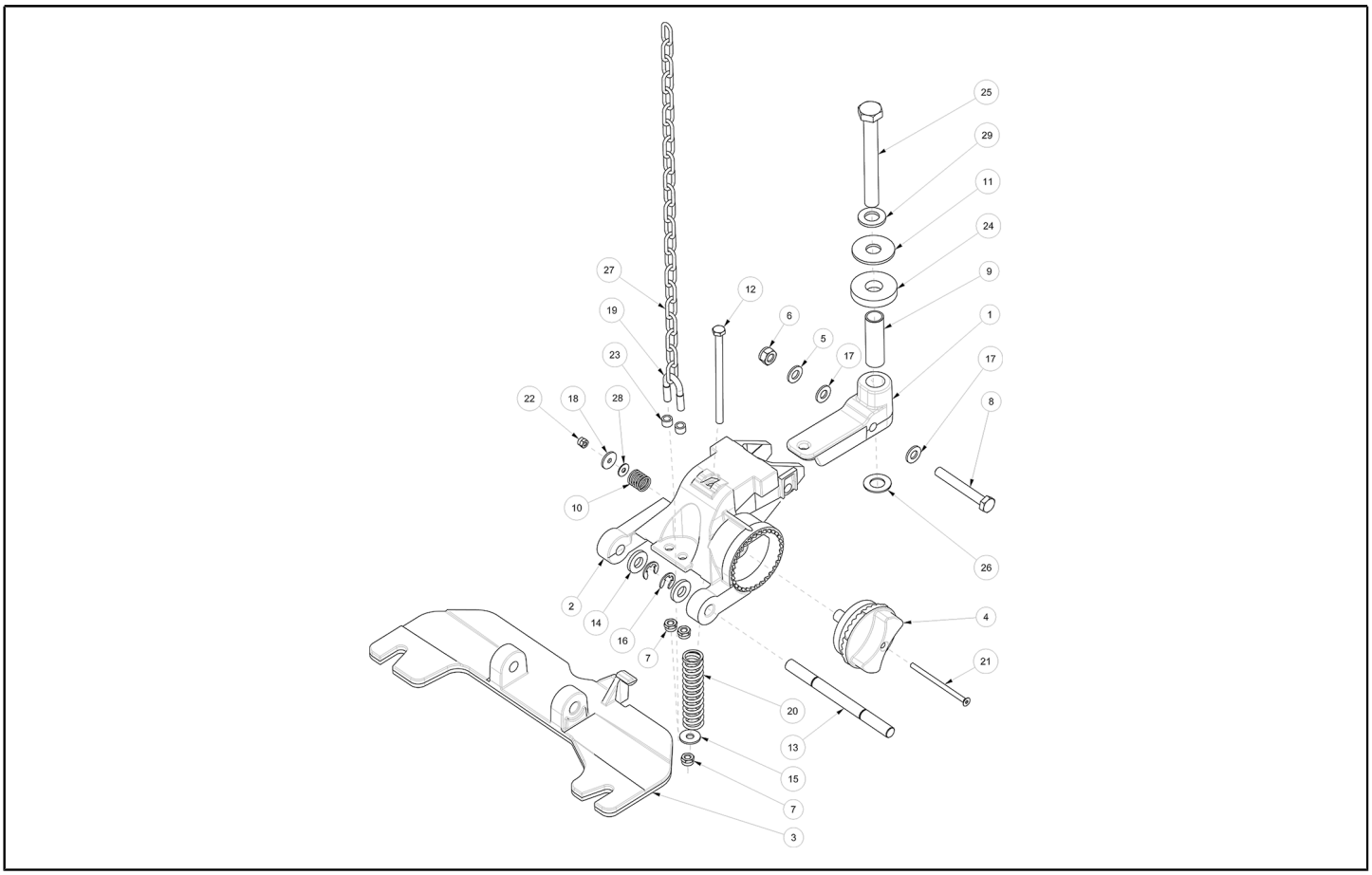

Ref. K	Part N.	Part N. 2	Description	Quantity	Validity From	Validity To	Price
0001	MFVR00235	N/A	SUPPORT PIVOT SQUEEGEE CT51-71	1,00			--
0002	MFVR00236	N/A	SUPPORT REGULATION SQUEEGEE CT51	1,00			--
0003	MFVR00335	N/A	SUPPORT -	1,00			--
0004	MPVR06468	N/A	KNOB SQUEEGEE ANGLE ADJUSTMENT	1,00			--
0005	VTRS13947	N/A	WASHER D. 8 INX UNI 6592	1,00			--
0006	VTDD01701	N/A	NUT M8 INOX+ZIN.	1,00			--
0007	VTDD01700	N/A	NUT M6 INOX+ZIN.	3,00			--
0008	VTVT01009	N/A	SCREW 8X60	1,00			--
0009	LAFN09439	N/A	BUSHING 13X16X51	1,00			--
0010	MLML00491	N/A	SPRING SQUEEGEE KNOB	1,00			--
0011	VTRS09142	N/A	WASHER UNI 6593 12X36X2,5	1,00			--
0012	VTVT01437	N/A	SCREW TE M6x100	1,00			--
0013	LAFN09417	N/A	PIN FOR SQUEEGEE SUPPORT CT51	1,00			--
0014	VTRS00382	N/A	WASHER -	2,00			--
0015	VTRS13945	N/A	WASHER D. 6X18 INX UNI 6593	1,00			--
0016	VTAE00077	N/A	SEEGER RADIALE TIPO H UNI7434 D8	2,00			--
0017	VTRS00274	N/A	WASHER NYLON 66 D.8,4-17-2 UNI	2,00			--
0018	VTRS00251	N/A	WASHER 4-16 INOX A2	1,00			--
0019	LAFN09231	N/A	BRACKET M6X11X29	1,00			--
0020	MLML00490	N/A	SPRING -	1,00			--
0021	VTVT01585	N/A	SCREW 4X70 UNI 5933	1,00			--
0022	VTDD15925	N/A	NUT M 4 INX+ZN	1,00			--
0023	TBBP00003	N/A	TUBE CRISTALLO 6X9	2,00			--
0024	MPVR06069	N/A	WASHER 15X40	1,00			--
0025	VTVT01502	N/A	SCREW M12X100 UNI5737 ZN 8.8	1,00			--
0026	VTRS88000	N/A	WASHER ELAST.ONDUL.DI 13	1,00			--
0027	MTCR00120	N/A	CHAIN -	1,00			--
0028	VTRS00017	N/A	WASHER STEEL INOX 4X12	1,00			--
0029	VTRS15978	N/A	WASHER D.12X24 UNI 6592 INX	1,00			--

Table: PACKAGING - DBDB14919 Progressive Number: 1

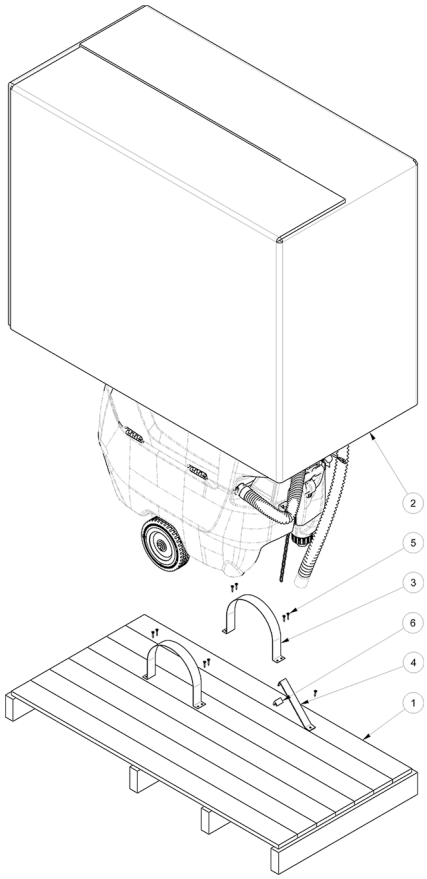

Ref. K	Part N.	Part N. 2	Description	Quantity	Validity From	Validity To	Price
0001	MIBA00150	N/A	PALLET	1,00			--
0002	MICT00703	N/A	CARTON	1,00			--
0003	MIVR00135	N/A	CLAMP RUOTA POSTERIORE X IMBAL.	2,00			--
0004	MIVR00137	N/A	CLAMP RUOTA POSTERIORE X IMBAL.	1,00			--
0005	VTVT00043	N/A	SCREW AUTOF.LEGNO 4,5X25 TS BR	9,00			--
0006	GUGO00797	N/A	GASKET .	0,05			--

Table: EPF - DBDB14920

Progressive Number: 1

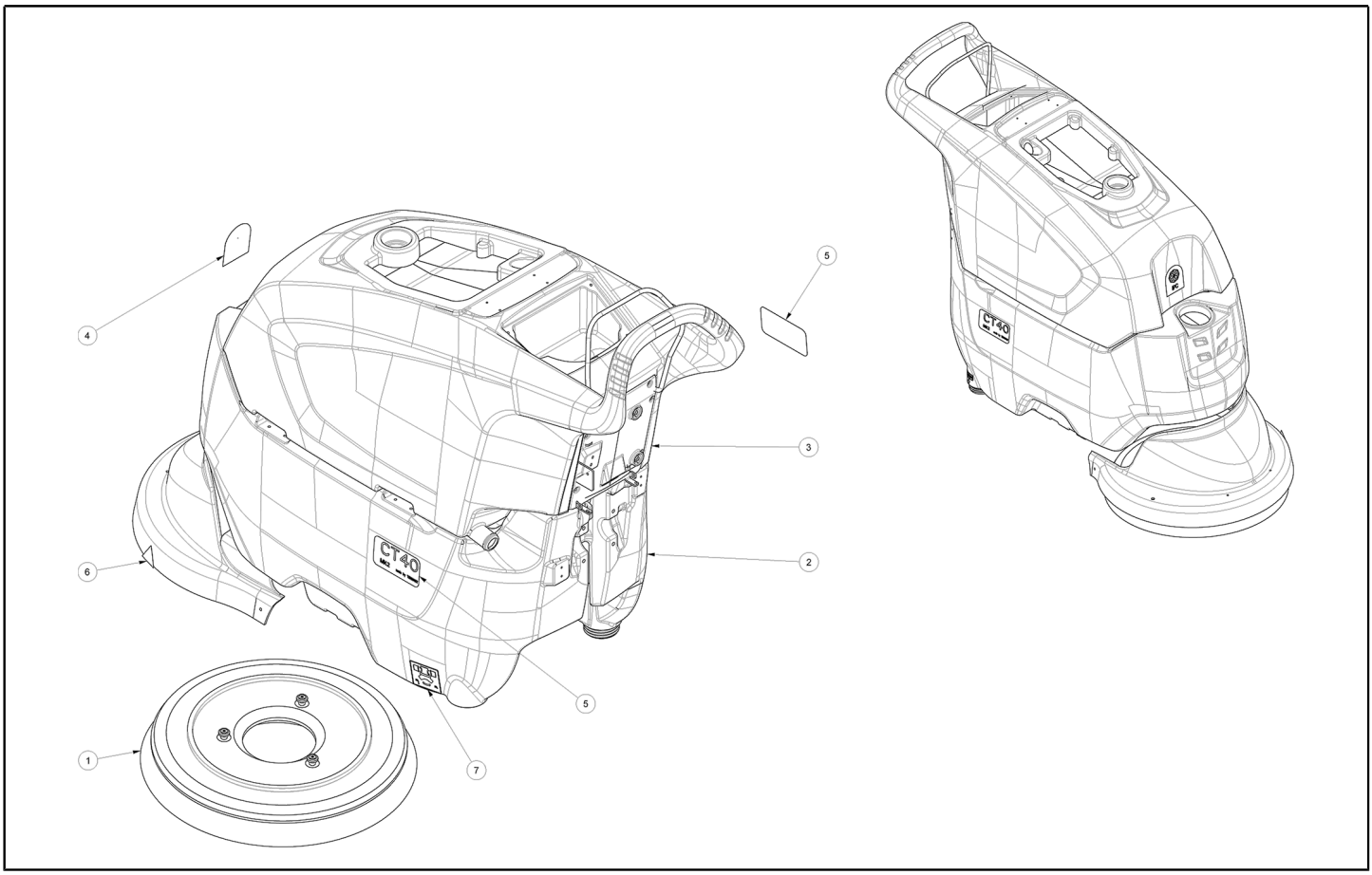

Ref. K	Part N.	Part N. 2	Description	Quantity	Validity From	Validity To	Price
0001	SPPV01332	N/A	BRUSH APC D.500 (19") PPL 0.65m	1,00			--
0002	MPVR13839	N/A	TANK SOLUTION	1,00			--
0003	MPVR13840	N/A	TANK RECOVERY	1,00			--
0004	ETET20266	N/A	LABEL LABEL IPC 82X60	1,00			--
0005	ETET18425	N/A	LABEL .	2,00			--
0006	ETET01014	N/A	ADHESIVE ATTENZ.ABRAS.ARTI	1,00			--
0007	ETET18584	N/A	LABEL COVERING WATER	1,00			--

Table: HYDRAULIC CIRCUIT - DBDB14921

Progressive Number: 1

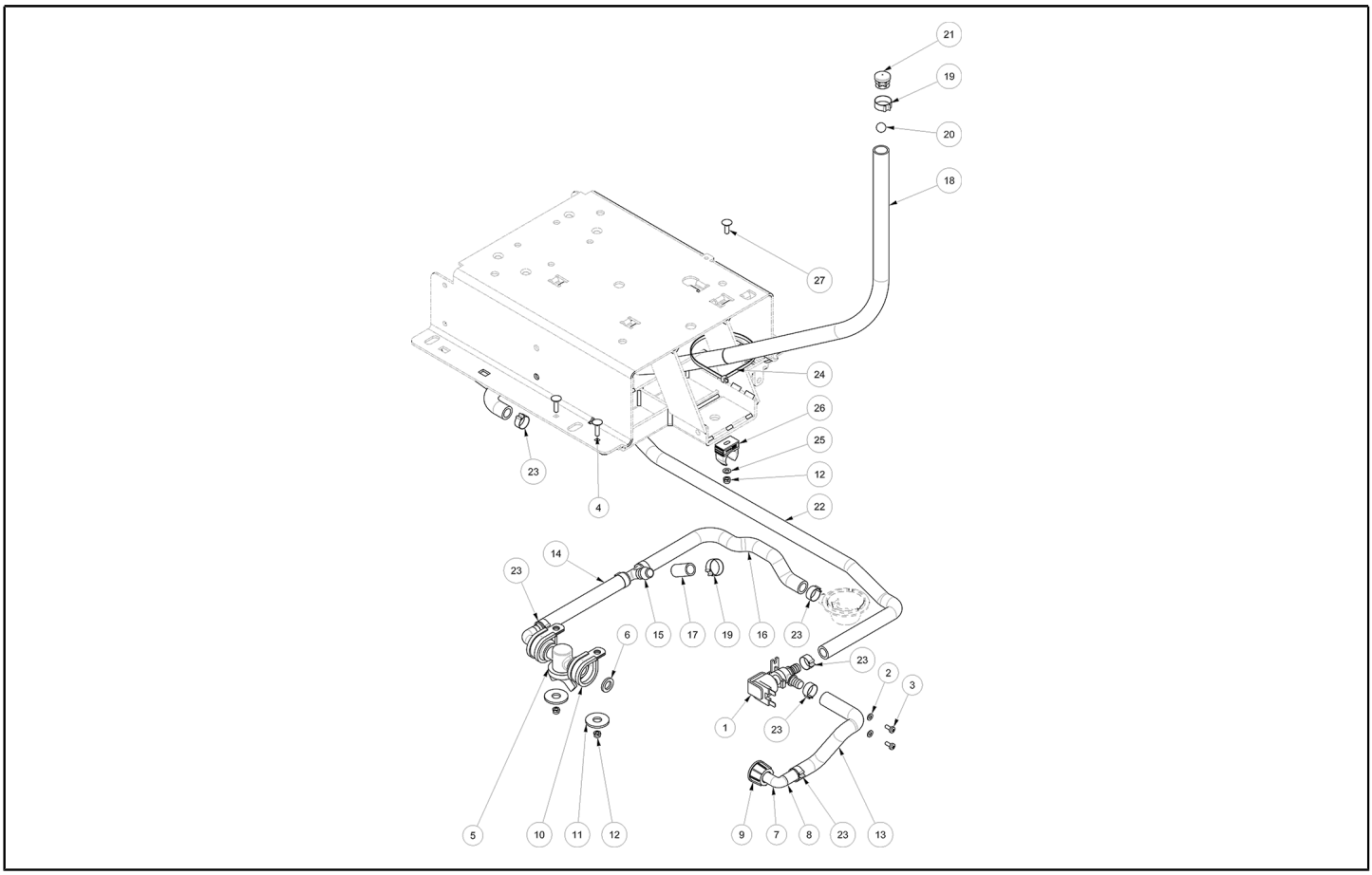

Ref. K	Part N.	Part N. 2	Description	Quantity	Validity From	Validity To	Price
0001	MEEV00036	N/A	SOLENOID VALVE HOLE 8mm CLEANTIME	1,00			--
0002	VTRS00515	N/A	WASHER D. 4 INX	2,00			--
0003	VTVT01004	N/A	SCREW TC+ M4 X 10 TRILOBATA	2,00			--
0004	VTVT01693	N/A	SCREW M5x20	2,00			--
0005	RCGR00078	N/A	VALVE TAP SOLUTION TANK	1,00			--
0006	GUGO00427	N/A	GASKET -	2,00			--
0007	RCVR00752	N/A	CONNECTOR G1/2"G	2,00			--
0008	TBBP00793	N/A	L.P. HOSE PVC Ø10-14 L=20 mm	2,00			--
0009	MPVR05240	N/A	RING NUT G1/2	2,00			--
0010	FSVR00032	N/A	CLAMP D.28 F.8,5 Inox430	2,00			--
0011	VTRS13750	N/A	WASHER D. 5X14 INX	2,00			--
0012	VTDD01693	N/A	NUT M 5 INX	3,00			--
0013	TBFX01392	N/A	HOSE L=200mm	1,00			--
0014	TBBP00813	N/A	HOSE D.12 L=180	1,00			--
0015	RCVR00483	N/A	CONNECTOR 3 VIE	1,00			--
0016	TBBP00812	N/A	HOSE D.12 L=270	1,00			--
0017	TBFX01215	N/A	TUBE Di12 De17 L =30 mm	1,00			--
0018	TBBP00811	N/A	HOSE D.16 L=680	1,00			--
0019	FSVR00263	N/A	CLAMP	2,00			--
0020	MPVR13876	N/A	BALL D.12	1,00			--
0021	MPVR13875	N/A	CAP D.20	1,00			--
0022	TBBP00795	N/A	HOSE L=900	1,00			--
0023	FSVR00261	N/A	CLAMP	8,00			--
0024	FSVR00435	N/A	CLAMP 3,7x290	1,00			--
0025	VTRS00516	N/A	WASHER D. 5 INX	1,00			--
0026	MPVR12708	N/A	CLIP .	1,00			--
0027	VTVT01737	N/A	SCREW UNI5731 5X16 A2	1,00			--

Table: BATTERY - DBDB15249

Progressive Number: 1

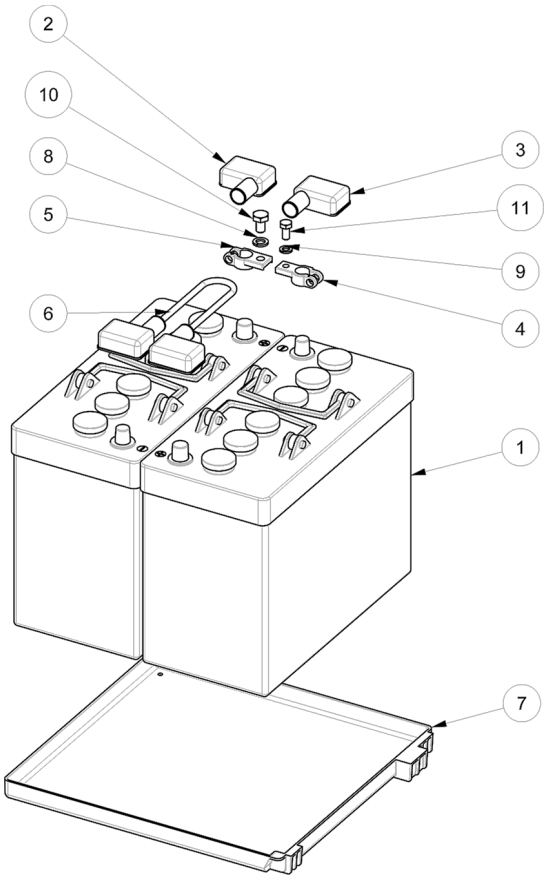

Ref. K	Part N.	Part N. 2	Description	Quantity	Validity From	Validity To	Price
0001	BAAC00105	N/A	BATTERY 12V 105Ah/C5 GEL IPC	2,00			--
0002	MEVR01424	N/A	BATTERY BOOT RED	1,00			--
0003	MEVR01425	N/A	BATTERY BOOT BLACK	2,00			--
0004	MEVR03033	N/A	CLAMP BATTERY	1,00			--
0005	MEVR03034	N/A	CLAMP BATTERY	1,00			--
0006	MEVR34820	N/A	WIRING BATTERY BRIDGE W/TERMINAL	1,00			--
0007	MPVR13891	N/A	PLATE BATTERIA CT40 B ECO	1,00			--
0008	VTRS15909	N/A	WASHER D.10	1,00			--
0009	VTRS15146	N/A	WASHER GROVER A2 UNI1751	1,00			--
0010	VTVT01149	N/A	SCREW TE M10X 16	1,00			--
0011	VTVT15916	N/A	SCREW TE M 8X 16 UNI 5739 A2	1,00			--