T981

Rider Floor Scrubber

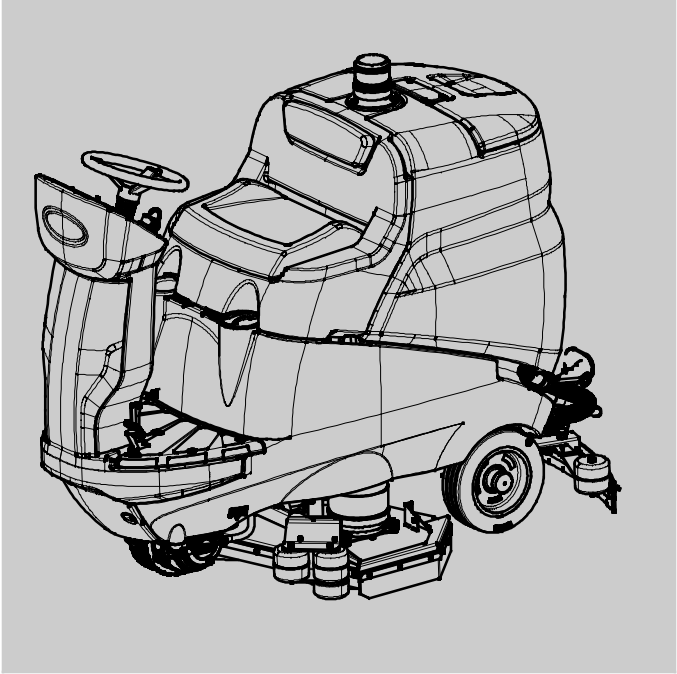

Parts Manual

Tennant*True*® Parts

North America

To view, print or download
the parts manual, visit:

www.tennantco.com/manuals

9022467
Rev. 01 (03-2024)

Only use TENNANT Company supplied or equivalent parts. Parts and supplies may be ordered online, by phone or from any Tennant Authorized Service Center or Distributor.

Before Ordering any parts or supplies, be sure to have the machine model number and serial number available.

Serial Number Label Location

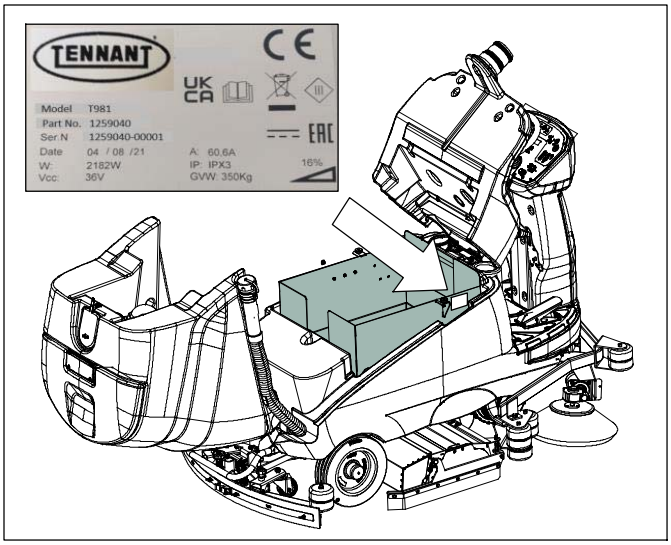

Tennant Company
10400 Clean Street
Eden Prairie, MN 55344-2650
USA
Phone: (800) 553-8033
www.tennantco.com

Specifications and parts are subject to change without notice.

Copyright © 2024 TENNANT Company

RECOMMENDED SPARE PARTS LIST 2
BRUSHES / PAD DRIVER AND PADS 5
RECOVERY TANK GROUP 6
SOLUTION TANK GROUP 8
SEAT GROUP 10
FRAME GROUP 12
DRIVE WHEEL GROUP 14
DRIVE WHEEL BREAKDOWN 16
REAR WHEEL GROUP 18
SCRUB HEAD LIFT AND BUMPER GROUP (90cm Disk Model) 20
SCRUB HEAD LIFT AND BUMPER GROUP (75cm Cylindrical Brush Model) 22
SIDE BRUSH GROUP (75cm Cylindrical Brush Model) 24
SQUEEGEE LIFT BRACKET GROUP 28
ACCELERATOR PEDAL GROUP 30
SCRUB HEAD GROUP (90cm Disk Model) 32
SCRUB HEAD GROUP (75cm Cylindrical Brush Model) 36
SQUEEGEE GROUP (90cm Disk Model) 40
SQUEEGEE GROUP (75cm Cylindrical Brush Model) 42
CONTROL PANEL GROUP 44
STEERING COLUMN GROUP (90CM Disk Model) 46
STEERING COLUMN GROUP (75CM Cylindrical Brush Model) 48
ELECTRICAL COMPONENT GROUP (90CM Disk Model) 50
ELECTRICAL COMPONENT GROUP (75CM Cylindrical Brush Model) 52
BATTERY COMPARTMENT GROUP (90CM Disk Model) 54
BATTERY COMPARTMENT GROUP (75CM Cylindrical Brush Model) 56
MANUAL BATTERY WATERING SYSTEM (OPTION) 58
ELECTRICAL DIAGRAM 60

RECOMMENDED SPARE PARTS LIST

T981 90cm Disk Model

Part Number	Description
SPPV01539	Brush, Ppl, 48cm (Standard)
SPPV01540	Brush, Abrv, 48cm (Tynex 120) (Option)
SPPV01541	Brush, Abrv, 48cm (Tynex 240) (Option)
SPPV01542	Brush, Abrv, 48cm (Tynex 320) (Option)
SPPV01543	Brush, Pes, Mix 5, 48cm (Option)
SPPV01221	Pad Driver 18
1243336	Pad, Buff, 18.0d, Red (Qty of 5)
1243337	Pad, Polish, 18.0d, White (Qty of 5)
1243335	Pad, Scb, 18.0d, Blu (Qty of 5)
1243724	Pad, Stripping, 18.0d, Brn (Qty of 5)
1243660	Pad, Strip, 18.0d Blk[Hi Prod] (Qty of 5)
1240392	Pad, Polish, 18.0d, Yel (Qty of 5)
PMVR06916	Sqge Asy, W/ Linatex Blades, 90/95
MPVR06553	Blade, Sqge, Front, Linatex 117cm (Standard)
MPVR06554	Blade, Sqge, Rear, Linatex 121cm (Standard)
MPVR02850	Blade, Sqge, Front, Nat Rub 117cm (Option)
MPVR05884	Blade, Sqge, Rear, Latex 121cm (Option)
MPVR13251	Blade, Sqge, Front, Pu 117cm (Option)
MPVR51009	Blade, Sqge, Rear Pu 121cm (Option)
MPVR51008	Flap, Rear
MPVR51007	Side Flap Rh Bt95
MPVR51006	Side Flap Lh Bt95
MPVR51005	Flap, Rear
MOCC00390	Motor, Brush, Gearbox
MOCC00474	Motor.Gearbox Ct160 Sx
MEVR05203	Carbon Motor Brush
897524	Bearing, Ball, 8b 30d 11w

T981 75cm Cylindrical Brush Model

Part Number	Description
SPPV01286	Brush, Soft, Ppl, 75cm Cyl (Standard)
SPPV00457	Brush, Med, Ppl, 75cm Cyl (Option)
SPPV01364	Brush, Soft, Mix 5, 75cm Cyl (Option)
SPPV01201	Brush, Abrv, 75cm Cyl (Tynex) (Option)
SPPV75790	Brush, Side, Ppl, Medium (Standard)
SPPV75794	Brush, Side, Abrv (Option)
PMVR06915	Sqge Asy W/ Linatex Blades, 75/80
MPVR06552	Blade, Sqge, Rear, Linatex 104cm (Standard)
MPVR06551	Blade, Sqge, Front, Linatex 102cm (Standard)
MPVR05883	Blade, Sqge, Rear, Latex 104cm (Option)
MPVR02830	Blade, Sqge, Front, Nat Rub 102cm (Option)
MPVR02832	Blade, Sqge, Rear, Pu 104cm (Option)
MPVR13250	Blade, Sqge, Front, Pu 102cm (Option)
MPVR02845	Flap, Side, Right
MPVR02846	Flap, Side, Left
GUVR75740	Ring
MPVR04720	Roller
MOCC00166	Motor Test.Roll.P185
MTCG87404	Belt
CUVR00164	Bearing, Main Brush
CUVR29964	Ball Bearing 6000-2rs1

T981 Common Service Parts	
Part Number	**Description**
897357	Battery, Bridge, M8, 70
1070587	Battery, Wet, 06vdc 0360ah, W/ Cart [Tr]
1262287	Battery, Agm, 06vdc 350ah
1043662	Charger, 36vdc 21a 85-265vac 1ph 45/65hz
1017079	Cord, Extn, 16ga /3, 10ft [Sjt]
MEVR00985	Brush Carbon 10x18
9017783	Fan, Vacuum
MEVR05202	Carbon Brush Vacuum
GUGO00306	Gasket Ten.160
FTAC00038	Strainer, Solution Tank G1/2
FTAC00047	Screen, Filter
9017737	Float, Shutoff
TBBP00485	Tube Drain Pu Ct160
MECB01227	Potentiometer, Traction
MECB01228	Contact, Micro, Pedal
MEEV00043	Solenoid Valve
RTRT00518	Wheel Swivel
PMVR01141	Tube, Air Outlet
PMVR01139	Hose Drain Solution Ct160
MOCC00394	Actuator Squeegee Ct160-230 36v
KTRI02060	Kit Brush Head Actuator Ct160
MOCC00380	Motorwheel Ct160 36v Mtr11
RTRT00795	Wheel 305/80-205/K
PPEL00025	Pump Est, 36v
MECE00526	Board Power Service Ct160-Ct230
KTRI06405*	Kit, Display
METT00135	Fuse 2a
METT00132	Fuse 30a
METT00136	Fuse 3a
METT00137	Fuse 4a
METT00138	Fuse 50a
KTRI06415	Kit, Display Board
MEVR01925	Fuse 150a
KTRI06416	Kit, Board, Logic
KTRI06417	Kit, Board Interface
KTRI05576	Kit Potentiometer Speed Contr
METT00086	Contactor 100a
RTRT00533	Motorwheel, Ring Replmt
CUVR00264	Bearing 32007x
CUVR00194	Clamp 2.5x100
GUGO00703	Gasket
MECE00927	Panel, Board 7ch4q162 150a 24-36v

BRUSHES / PAD DRIVER AND PADS

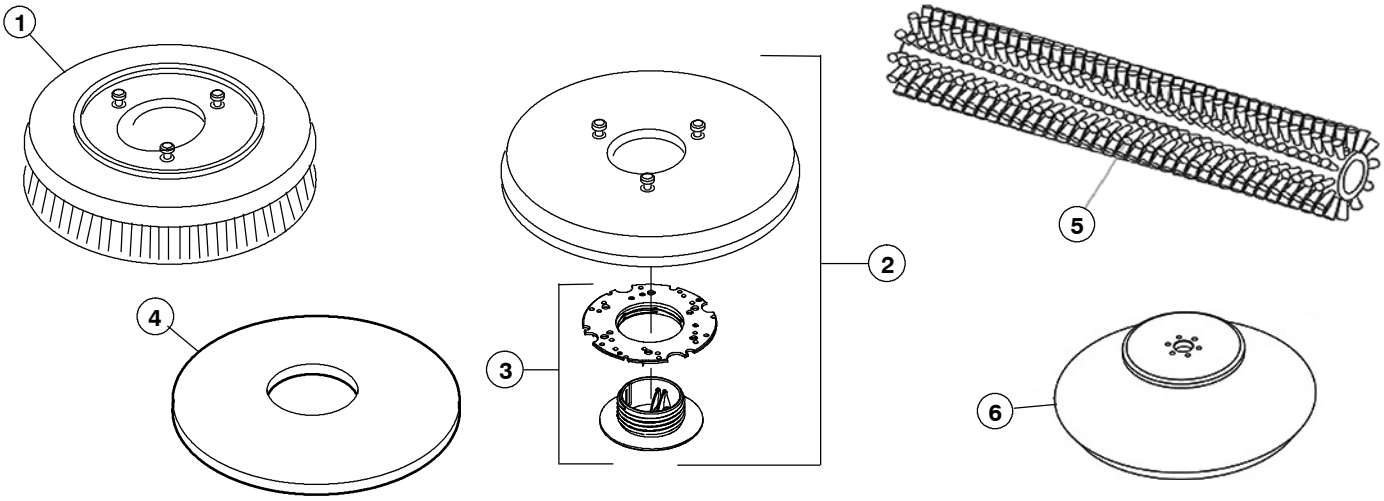

90cm Disk Model

	Ref.	Part No.	Mfr. Date	Description	Qty.
	1	SPPV01539	( )	Brush, Ppl, 48cm (Standard)	2
	1	SPPV01540	( )	Brush, Abrv, 48cm (Tynex 120) (Option)	2
	1	SPPV01541	( )	Brush, Abrv, 48cm (Tynex 240) (Option)	2
	1	SPPV01542	( )	Brush, Abrv, 48cm (Tynex 320) (Option)	2
	1	SPPV01543	( )	Brush, Pes, Mix 5, 48cm (Option)	2
∇	2	SPPV01221	( )	Pad Driver 18	2
▲	3	MPVR04717	( )	Fix Disk Green Screw	1
	4	1243336	( )	Pad, Buff, 18.0d, Red (Qty of 5)	1
	4	1243337	( )	Pad, Polish, 18.0d, White (Qty of 5)	1
	4	1243335	( )	Pad, Scb, 18.0d, Blu (Qty of 5)	1
	4	1243724	( )	Pad, Stripping, 18.0d, Brn (Qty of 5)	1
	4	1243660	( )	Pad, Strip, 18.0d Blk[Hi Prod] (Qty of 5)	1
	4	1240392	( )	Pad, Polish, 18.0d, Yel (Qty of 5)	1

75cm Cylindrical Brush Model

Ref.	Part No.	Mfr. Date	Description	Qty.
5	SPPV01286	( )	Brush, Soft, Ppl, 75cm Cyl (Standard)	2
5	SPPV00457	( )	Brush, Med, Ppl, 75cm Cyl (Option)	2
5	SPPV01364	( )	Brush, Soft, Mix 5, 75cm Cyl (Option)	2
5	SPPV01201	( )	Brush, Abrv, 75cm Cyl (Tynex) (Option)	2
6	SPPV75790	( )	Brush, Side, Ppl, Medium (Standard)	2
6	SPPV75794	( )	Brush, Side, Abrv (Option)	2

∇ ASSEMBLY

▲ INCLUDED IN ASSEMBLY

RECOVERY TANK GROUP

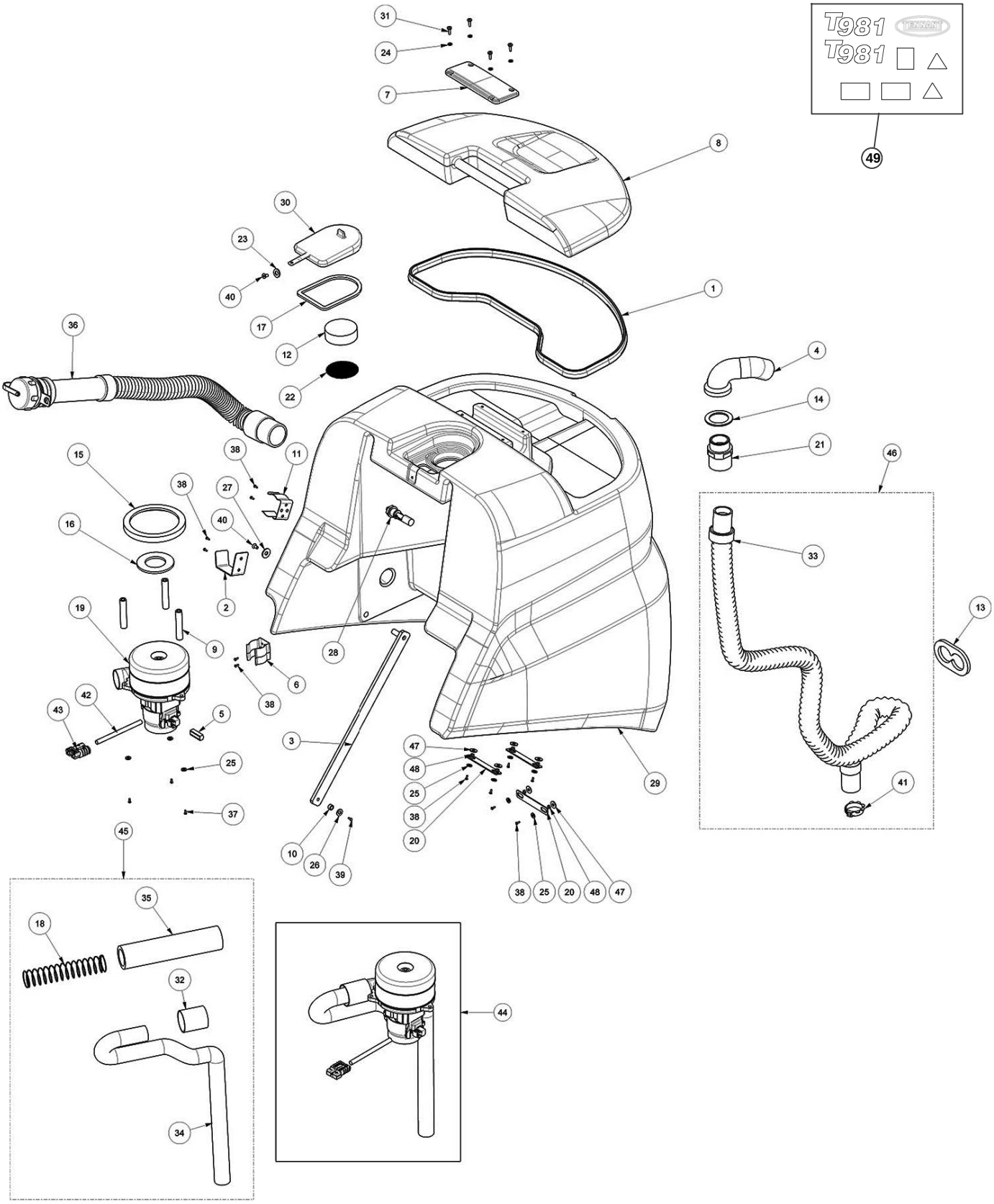

RECOVERY TANK GROUP

Ref.	Part No.	Mfr. Date	Description	Qty.
1	GUGO00703	( )	Gasket	1
2	KTRI01952	( )	Kit -	1
3	LAFN05803	( )	Assembled Asta Serbatoio P185	1
4	PMVR02010	( )	Curve Asp.P160	1
5	MEVR05202	( )	Carbon Brush Vacuum	1
6	9017721	( )	Clip, Hose, Recvy	1
7	MPVR13192	( )	Cover	1
8	MPVR13188	( )	Cover Recovery Tank	1
9	LAFN04171	( )	Spacer Aspirator	3
10	LAFN75911	( )	Spacer, D.12 H.7.	1
11	FSVR44166	( )	Hose Clip D.50	1
12	FTDP00130	( )	Filter Serb. Recupero P185	1
13	MPVR04659	( )	Flange	1
14	GUGO00216	( )	Gasket Tank Drain Hose Cuff	1
15	GUGO30649	( )	Gasket Vacuum Motor	1
16	GUGO31051	( )	Gasket Lav.	1
17	GUGO00306	( )	Gasket Ten.160	1
18	MLML00244	( )	Spring	1
19	MOCC00164	( )	Motor	1
20	LAFN05829	( )	Plate Ferma Tubo Aspirazione	3
21	RCDS00024	( )	Connector Pg.Dir.11/2 M	1
22	897649	( )	Filter, Screen, Motor, Vacfan	1
23	897432	( )	Washer, D. 10x21, Uni6592, Inox	1
24	897166	( )	Washer, D. 5, Inox	4
25	897106	( )	Washer, Flat, 6,00x11,00x1,6, Ss	9
26	897152	( )	Washer, D.8, Uni6592, Inox	1
27	897120	( )	Washer, D.8x24, Uni6593, Inox	1
28	9017737	( )	Float, Shutoff	1
29	MPVR13187	( )	Tank Recovery	1
30	MPVR04100	( )	Cap Vac	1
31	VTVT15961	( )	Screw M5x16, Tbc, Tc, Uni7687	4
32	N/A	( )	Sleeve	1
33	TBFX00280	( )	Tube Aspiraz.Cpl P160	1
34	TBFX00100	( )	Tube	1
35	ITSO00034	( )	Pipe, Wool I42 L.250	1
36	TBBP00485	( )	Tube Drain Pu Ct160	1
37	VTVT00888	( )	Screw Te M.6- 100	3
38	897130	( )	Screw, Te, M6x12, Uni5739, A2	12
39	897184	( )	Screw, Te, M8x16, Uni5739, A2	1
40	VTVT00678	( )	Screw	2
41	MPVR06119	( )	Clamp Indication, Yellow	1
42	MEVR00001	( )	Sheathing, Recovery Tank	0,20
43	MEVR07039	( )	Connector Battery Sb50 Gray	1
44	9017783	( )	Fan, Vacuum	1
45	PMVR01141	( )	Tube, Air Outlet	1
46	KTRI04700	( )	Kit Replacement Tbfx00280	1
47	897112	( )	Washer, Flat, 6,00x18,00x1,6	6
48	LAFN11383	( )	Spacer	6
49	KTRI06401	( )	Label, Kit [T981]	1

SOLUTION TANK GROUP

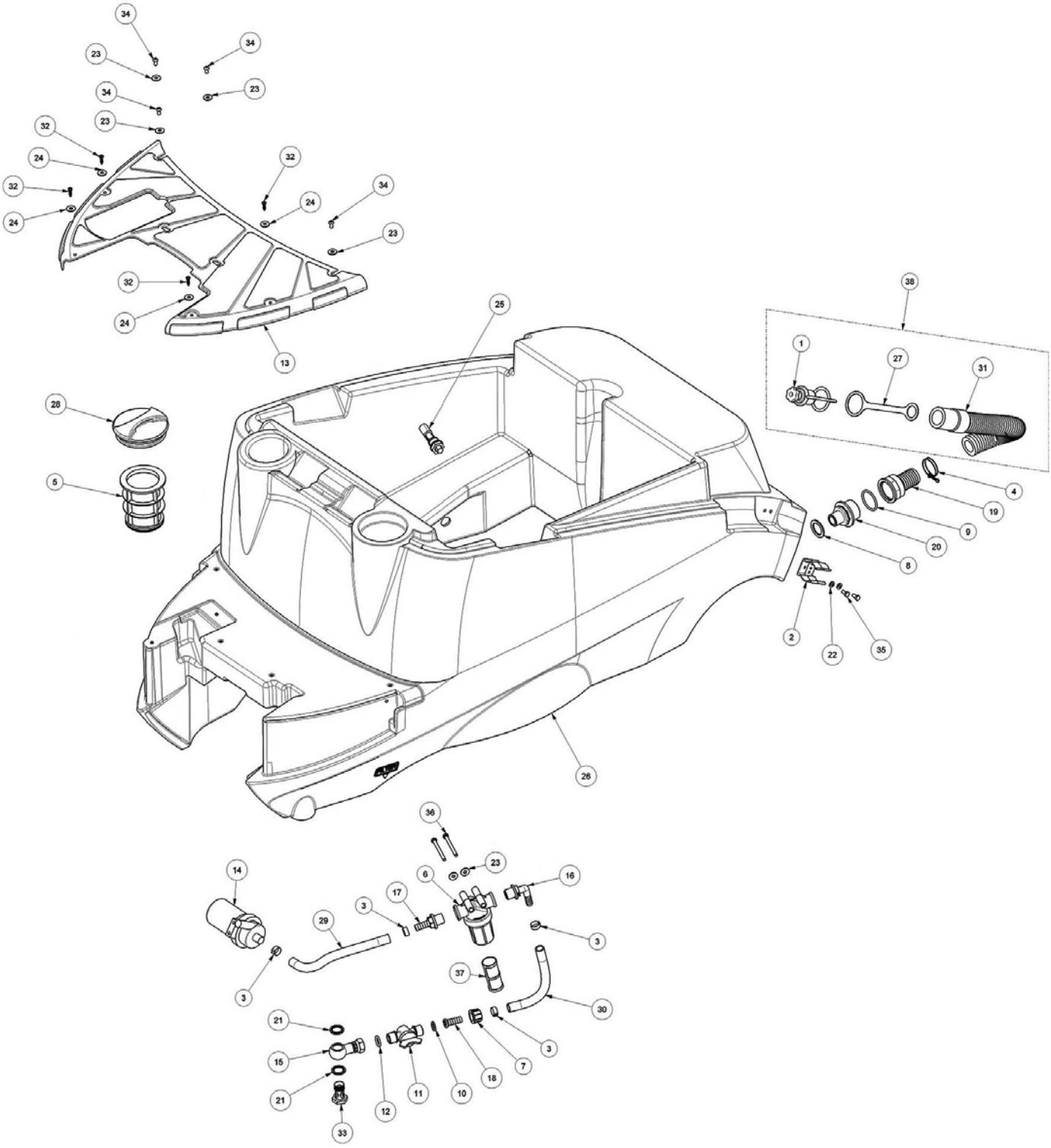

SOLUTION TANK GROUP

Ref.	Part No.	Mfr. Date	Description	Qty.
1	MPVR05064	( )	Drain Hose Assy, Solution Tank	1
2	9017721	( )	Clip, Hose, Recvy	1
3	897257	( )	Clamp	4
4	FSVR00249	( )	Clamp	1
5	897174	( )	Filter Solution Tank Inlet	1
6	FTAC00038	( )	Strainer, Solution Tank G1/2	1
7	MPVR05240	( )	Ring Nut G1/2	1
8	897361	( )	Crankcase Frontale 705 Grigio	1
9	GUGO00290	( )	Gasket Or (G10052)	1
10	GUGO00427	( )	Gasket	1
11	9018454	( )	Water, Valve, Soltn	1
12	GUGO36290	( )	Nut, O- Ring D. 17.04 X 3.53 Nbr 70sh	1
13	MPVR03002	( )	Panel	1
14	PPEL00025	( )	Pump Est, 36v	1
15	RCVR01728	( )	Connector	1
16	RCVR00542	( )	Curved Connect. M G1/2 Portag. 113- 2213	1
17	RCVR00540	( )	Connector	1
18	RCVR00744	( )	Connector	1
19	RCVR00712	( )	Connector Portagomma	1
20	RCVR00713	( )	Connector, Male	1
21	897458	( )	Washer 1/2	2
22	897106	( )	Washer, Flat, 6,00x11,00x1,6, Ss	2
23	897112	( )	Washer, Flat, 6,00x18,00x1,6	6
24	VTRS04026	( )	Washer D. 6x18x2.38	4
25	9017737	( )	Float, Shutoff	1
26	MPVR05860	( )	Tank Solution	1
27	MPVR49412	( )	Clamp Shk	1
28	MPVR04075	( )	Cap, Small	1
29	897256	( )	Tube Flex D.12x3 Armorv.Pvc Tr	1
30	897256	( )	Tube Flex D.12x3 Armorv.Pvc Tr	1
31	TBFX00208	( )	Tube Di Scarico	1
32	VTVT00892	( )	Vr, Screw, 5- 20, Zn	4
33	RCDS49623	( )	Screw In Drain Cap	1
34	VTVT00640	( )	Screw Tbei M 6x 12 Iso 7380 Ix	4
35	897130	( )	Screw, Te, M6x12, Uni5739, A2	2
36	VTVT00699	( )	Screw, M6x70	2
37	FTAC00047	( )	Screen, Filter	1
38	PMVR01139	( )	Hose Drain Solution Ct160	1

SEAT GROUP

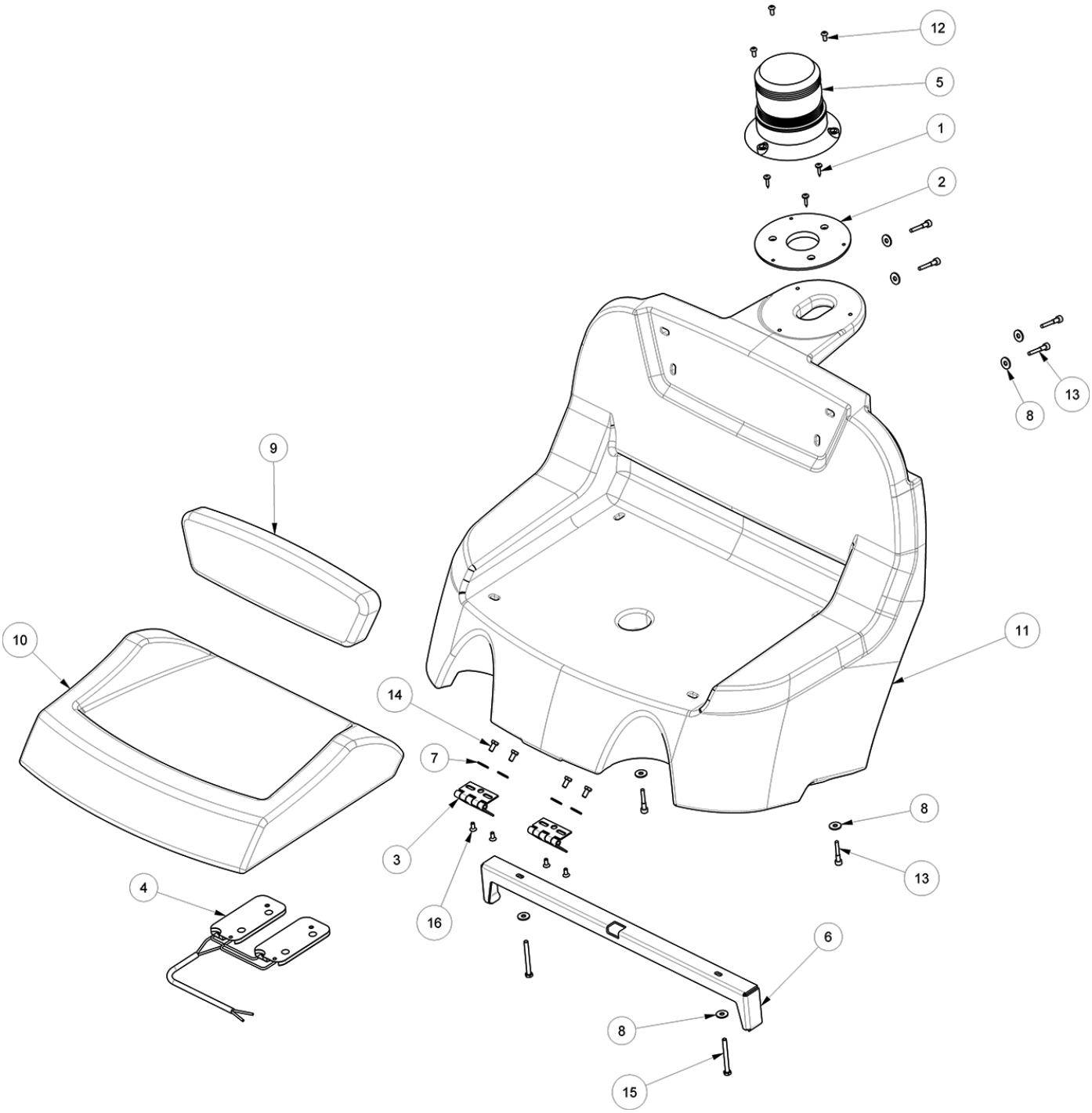

SEAT GROUP

Ref.	Part No.	Mfr. Date	Description	Qty.
1	VTVT00752	( )	Screw Tc+ M.4,8- 19	3
2	MPVR06103	( )	Bracket -	1
3	CEVR00060	( )	Hinge, Seat	2
4	897445	( )	Switch, Sensor, Seat	1
5	MELF00053	( )	Flashing Light -	1
6	LAFN06824	( )	Spacer Bearing	1
7	897112	( )	Washer, Flat, 6,00x18,00x1,6	4
8	VTRS04026	( )	Washer D. 6x18x2.38	8
9	SESD00020	( )	Seat, Backrest	1
10	897444	( )	Seat	1
11	MPVR13189	( )	Support Seat	1
12	897559	( )	Screw Tbce Iso 7380 5x12	3
13	30556	( )	Screw, Soc, M6 x 1.00 x 35, 12.9	6
14	897130	( )	Screw, Te, M6x12, Uni5739, A2	4
15	897421	( )	Screw Te M6x60 Uni5739 Inox	2
16	VTVT00306	( )	Screw Tspei M5x12 Uni5933	4

FRAME GROUP

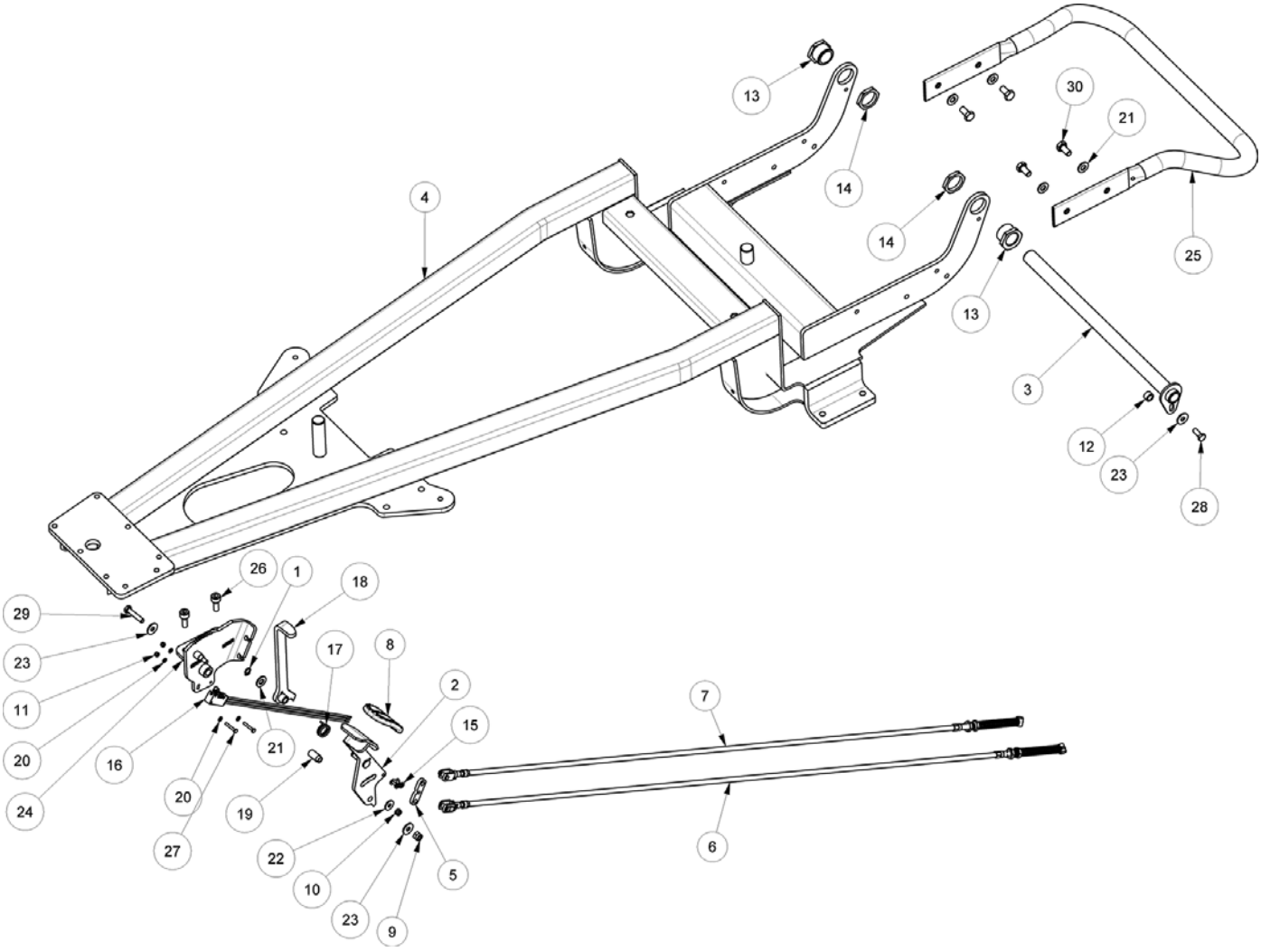
13
14
30
21
4
14
25
13
3
12
23
28
26
1
18
29
23
17
8
11
2
7
15
20
16
21
24
20
19
27
22
6
10
5
23
9

FRAME GROUP

Ref.	Part No.	Mfr. Date	Description	Qty.
1	VTAE14096	( )	Clip, D.8, Din471	1
2	LAFN05767	( )	Pedal Brake	1
3	LAFN05805	( )	Shaft Wldt, Pivot, Tank	1
4	LAFN05790	( )	Frame Complete	1
5	LAFN05769	( )	Joint, Frame	1
6	CMCV00310	( )	Cable, Brake Right	1
7	CMCV00311	( )	Cable, Brake Left	1
8	MPVR45096	( )	Pedal Cover Large V1021	1
9	VTDD01699	( )	Nut M6 Inox+Zinc.B.	1
10	VTDD01693	( )	Nut M 5 Inx	1
11	9018496	( )	Nut, Strap, Sqge	2
12	LAFN75911	( )	Spacer, D.12 H.7.	1
13	LAFN51079	( )	Nut, Side, Metal	2
14	LAFN51080	( )	Ring Nut	2
15	MTCR47037	( )	Warp Knitting 3/8	1
16	MECI44780	( )	Microswitch D2vw- 5l2a- 1m Omr	1
17	MLML00237	( )	Spring Recall Pedal	1
18	LAFN51019	( )	Pedal Blocco	1
19	LAFN04142	( )	Pin, Pedal Brake	1
20	VTRS00385	( )	Washer Uni 6592 3,2x7x0,5 Inox	4
21	897152	( )	Washer, D.8, Uni6592, Inox	5
22	897384	( )	Washer, M5x14, Inox	1
23	897112	( )	Washer, Flat, 6,00x18,00x1,6	3
24	LAFN05766	( )	Support Pedale Cpl	1
25	LAFN06275	( )	Hose, Roll Bar	1
26	897377	( )	Screw Tcei M8x20 Uni5931 Inox	2
27	VTVT01350	( )	Screw, M3x20	2
28	897128	( )	Screw Te 6x16 Uni5739	1
29	VTVT00433	( )	Screw, M6x30	1
30	897184	( )	Screw, Te, M8x16, Uni5739, A2	4

DRIVE WHEEL GROUP

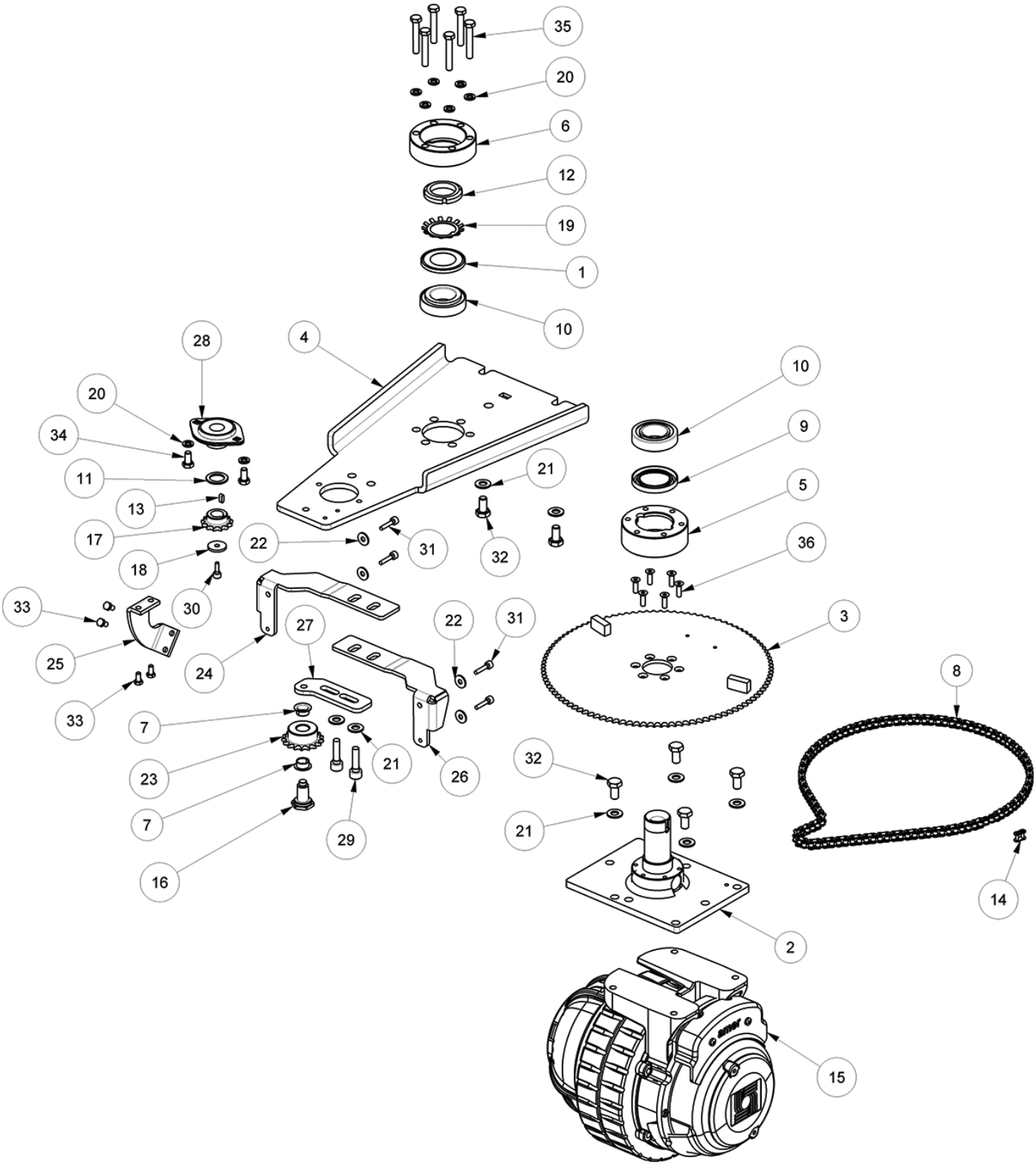

DRIVE WHEEL GROUP

Ref.	Part No.	Mfr. Date	Description	Qty.
1	PVVR01018	( )	Ring Nilos 32007	1
2	LAFN11201	( )	Plate Ct160	1
3	LAFN05764	( )	Assembled Corona Sterzo	1
4	LAFN05763	( )	Assembled Piastra Sterzo	1
5	LAFN11202	( )	Bushing Lower Ct160	1
6	LAFN11203	( )	Bushing Upper Ct160	1
7	CUVR00192	( )	Brush Block Ring	2
8	MTCR00085	( )	Chain 3/8	1
9	GUVR00565	( )	Gasket Din 3760 A 40x62x7	1
10	CUVR00264	( )	Bearing 32007x	2
11	LAFN07030	( )	Spacer, Direction	1
12	VTVR75747	( )	Ring Nut Autoblok M 35 X 1,5 Guk	1
13	VTVR00229	( )	Key 5x5x12	1
14	MTCR47037	( )	Warp Knitting 3/8	1
15	MOCC00380	( )	Motorwheel Ct160 36v Mtr11	1
16	LAFN11196	( )	Pin	1
17	MTCR00070	( )	Pin, Steering Shaft	1
18	LAFN04134	( )	Washer Pinion Steering	1
19	VTRS00595	( )	Washer Mb 7 Din5406	1
20	897216	( )	Washer, D. 8, Grw, Uni1751, Inox	8
21	897432	( )	Washer, D. 10x21, Uni6592, Inox	8
22	897112	( )	Washer, Flat, 6,00x18,00x1,6	4
23	MTPL00238	( )	Roller	1
24	LAFN06486	( )	Bracket	1
25	LAFN05795	( )	Bracket, Mount, Pump	1
26	LAFN06487	( )	Bracket	1
27	LAFN11195	( )	Support	1
28	897283	( )	Support	1
29	41358	( )	Screw, Soc, M10 x 1.50 x 35, 12.9	2
30	897352	( )	Screw, Tcei, M.6x16	1
31	VTVT12255	( )	Screw Tcce Uni 5931 6x25 Zb	4
32	VTVT13936	( )	Screw, M10x20	6
33	897130	( )	Screw, Te, M6x12, Uni5739, A2	4
34	897184	( )	Screw, Te, M8x16, Uni5739, A2	2
35	897232	( )	Screw, Te, M8x50, Inox, A2	6
36	897277	( )	Screw, Tspei, M6x20, Uni5933	6

DRIVE WHEEL BREAKDOWN

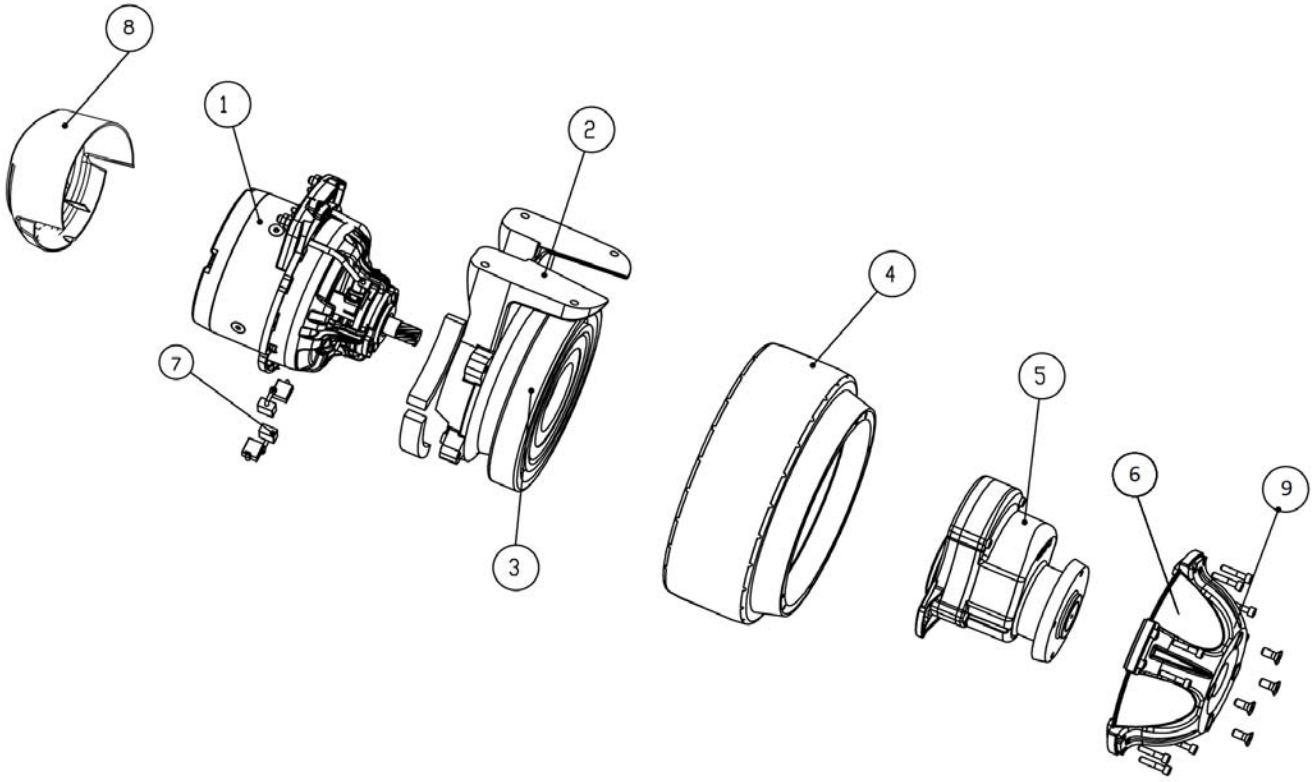

DRIVE WHEEL BREAKDOWN

	Ref.	Part No.	Mfr. Date	Description	Qty.
∇		MOCC00380	( )	Motorwheel Ct160 36v Mtr11	1
▲	1	MOCC00398	( )	Motor Mp100	1
▲	2	MFVR00290	( )	Support Aluminium Motorwheel	1
▲	3	CUVR00194	( )	Clamp 2.5x100	1
▲	4	RTRT00533	( )	Motorwheel, Ring Replmt	1
▲	5	RDGR00039	( )	Reduction Unit -	1
▲	6	MPVR08044	( )	Cover, Motorwheel	1
▲	7	MEVR00985	( )	Brush Carbon 10x18	4
▲	8	MPVR04999	( )	Cover, Top, Motorwheel	1
▲	9	MFVR00295	( )	Gearbox , Motor Wheel Support	1

∇ ASSEMBLY

▲ INCLUDED IN ASSEMBLY

REAR WHEEL GROUP

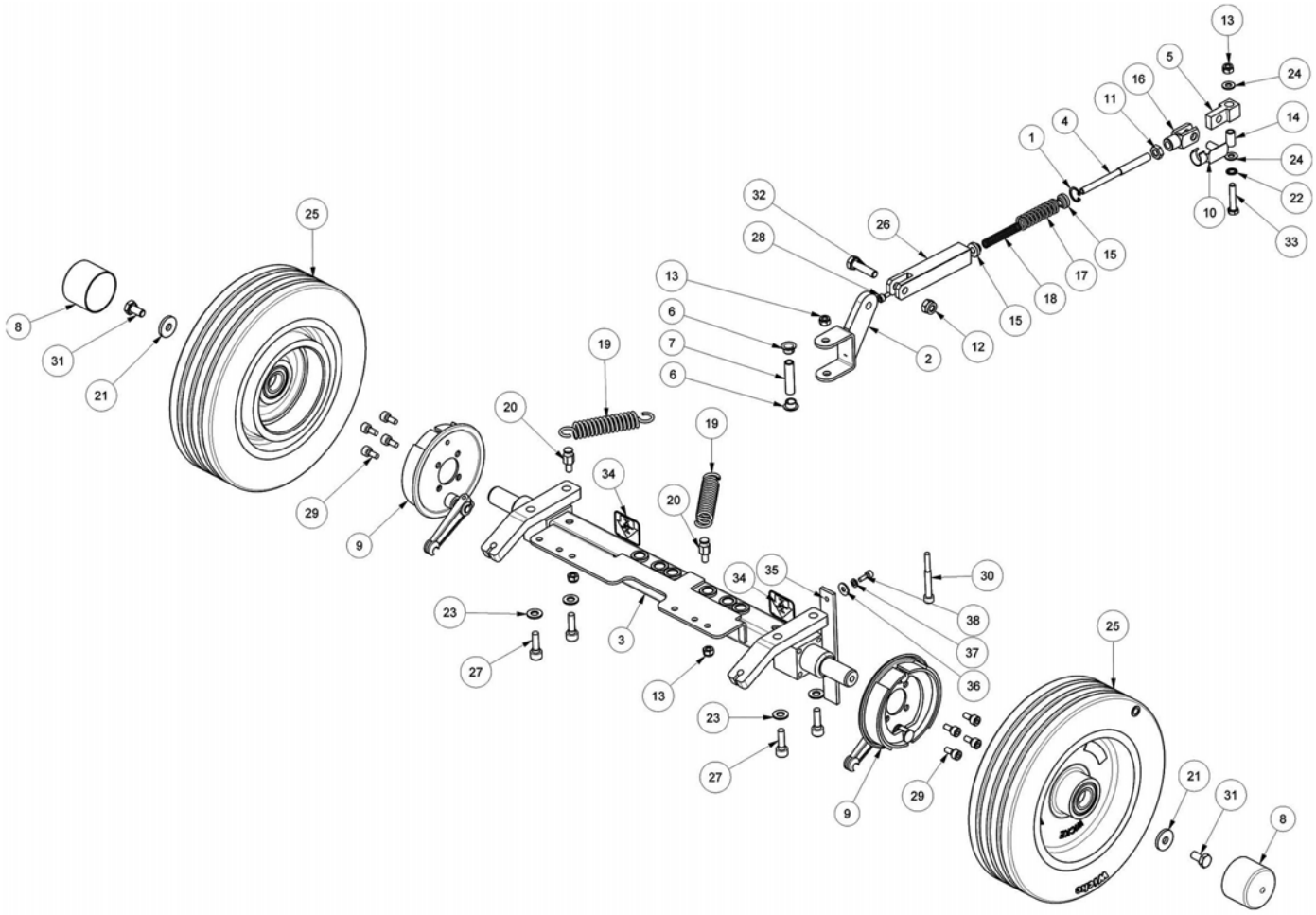

REAR WHEEL GROUP

Ref.	Part No.	Mfr. Date	Description	Qty.
1	VTAE00009	( )	Washer 472 D.20	1
2	LAFN05778	( )	Assembled C Snodo Orizzontale	1
3	LAFN07957	( )	Axle	1
4	LAFN06819	( )	Hose Shock Absorber Wiper	1
5	LAFN04124	( )	Joint, Block, Parallel	1
6	CUVR00130	( )	Bearing, Crawling	2
7	LAFN07879	( )	Bushing -	1
8	MPVR12162	( )	Cap 60,34x44,46	2
9	RTRT45090	( )	Block Brake D.125 Tk	2
10	CMCV33364	( )	Clip M10	1
11	39312	( )	Nut, Hex, Std, M10 x 1.50	1
12	897414	( )	Nut M10 Inox	1
13	VTDD01701	( )	Nut M8 Inox+Zin.	4
14	LAFN04158	( )	Spacer Parallel, Wiper	1
15	LAFN06818	( )	Hose Spring Shock Absorber	2
16	CMCV33359	( )	Joint	1
17	MLML00290	( )	Spring, Shock Absorber Wiper	1
18	MLML00300	( )	Spring, Left	1
19	MLML00241	( )	Spring Brush Pres. Ct110- 160- 230	2
20	LAFN04143	( )	Pin Fixed Spring	2
21	LAFN04144	( )	Washer, Rear Wheels	2
22	897185	( )	Washer, D. 8, Din6798- A, Inox, A2	1
23	VTRS00505	( )	Washer D.10 Uni 6592	4
24	897152	( )	Washer, D.8, Uni6592, Inox	2
25	RTRT00795	( )	Wheel 305/80- 205/K	2
26	LAFN06817	( )	Hose, Shockabsorber	1
27	897413	( )	Screw, Tcei, M10x30	4
28	09744	( )	Screw, Hex, M6 x 1.00 x 12, Ss	1
29	897347	( )	Screw, Tcei, M.8x16	8
30	09767	( )	Screw, Hex, M8 x 1.25 x 70, Ss	1
31	VTVT13936	( )	Screw, M10x20	2
32	39285	( )	Screw, Hex, M10 x 1.50 x 40, Ss	1
33	41342	( )	Screw, Hex, M8 x 1.25 x 40, 8.8	1
34	N/A	( )	Label (Order Label Kit KTRI06401)	4
35	MPVR04693	( )	Strap, Static	1
36	897112	( )	Washer, Flat, 6,00x18,00x1,6	1
37	897129	( )	Washer, D.6, Grw, Uni1751, Inox	1
38	897352	( )	Screw, Tcei, M.6x16	1

SCRUB HEAD LIFT AND BUMPER GROUP (90cm Disk Model)

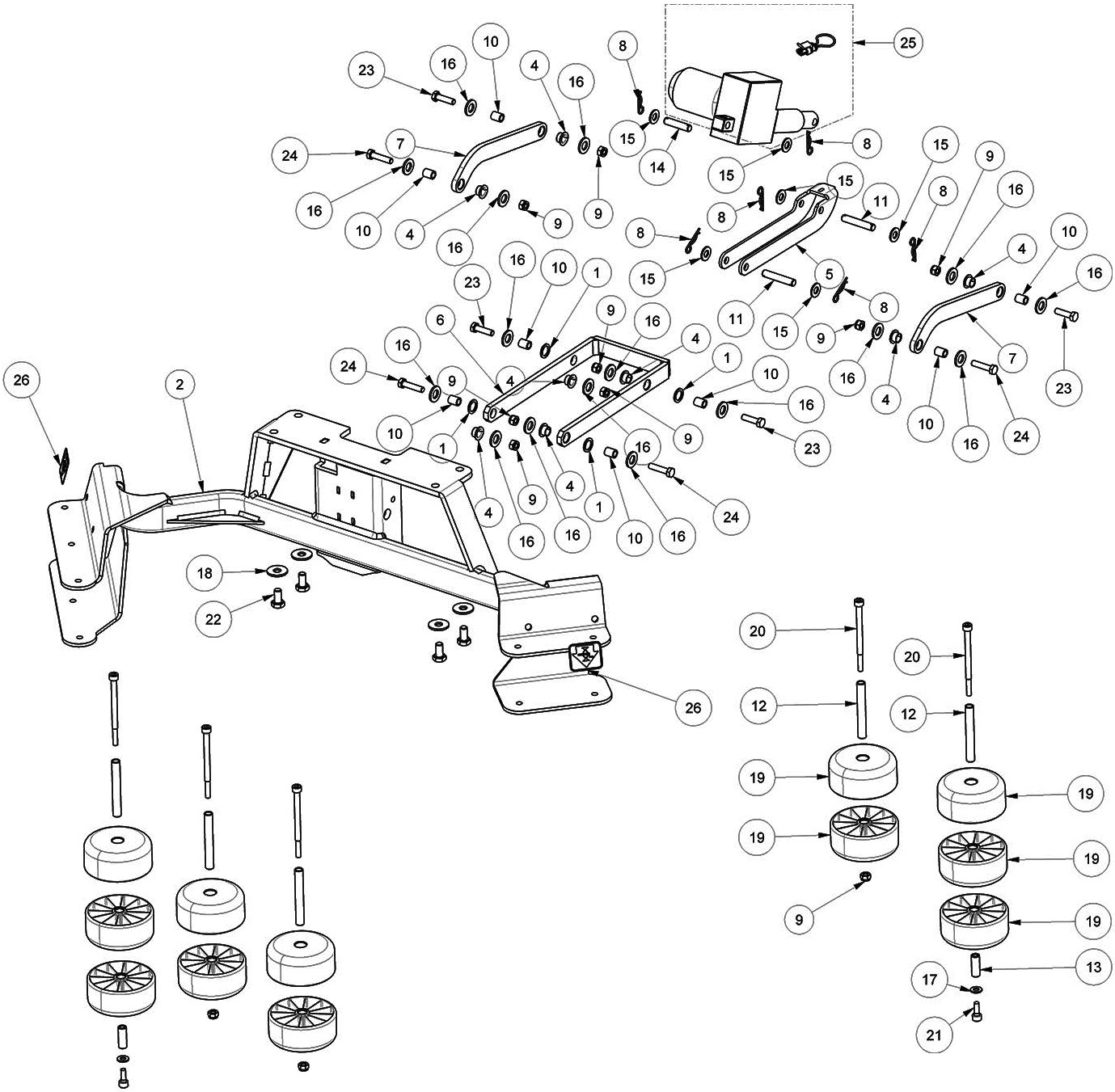

SCRUB HEAD LIFT AND BUMPER GROUP (90cm Disk Model)

Ref.	Part No.	Mfr. Date	Description	Qty.
1	VTRS00376	( )	Washer 15x21	4
2	LAFN05905	( )	Plate, Assembled, Roll- Bar	1
3	MOCC00304	( )	Actuator Head	1
4	CUVR00130	( )	Bearing, Crawling	8
5	LAFN05781	( )	Arm Attuatore	1
6	LAFN08912	( )	Arm	1
7	LAFN08911	( )	Spacer 12- 8	2
8	VTVR47052	( )	Pin, Wire, Split	6
9	VTDD01701	( )	Nut M8 Inox+Zin.	11
10	897526	( )	Bushing, Sleeve, 8b 12d 15l	8
11	LAFN11135	( )	Pin	2
12	LAFN04127	( )	Pin Rullo Paracolpi	5
13	LAFN06472	( )	Pin, Wheel	2
14	LAFN11136	( )	Pin	1
15	897432	( )	Washer, D. 10x21, Uni6592, Inox	6
16	897215	( )	Washer, D.12x24, Uni6592, Inox	16
17	897152	( )	Washer, D.8, Uni6592, Inox	2
18	897391	( )	Washer D.10	4
19	RTRT00510	( )	Wheel Bumper Ral7040	12
20	VTVT67560	( )	Screw Tcei M8x110 Inox Aisi 304	5
21	897377	( )	Screw Tcei M8x20 Uni5931 Inox	2
22	VTVT13936	( )	Screw, M10x20	4
23	897246	( )	Screw, Te, M8x30, Uni5739, Inox	4
24	897243	( )	Screw Te M8x35 Uni5739 Inox	4
25	KTRI02060	( )	Kit Brush Head Actuator Ct160	1
26	N/A	( )	Label (Order Label Kit KTRI06401)	4

SCRUB HEAD LIFT AND BUMPER GROUP (75cm Cylindrical Brush Model)

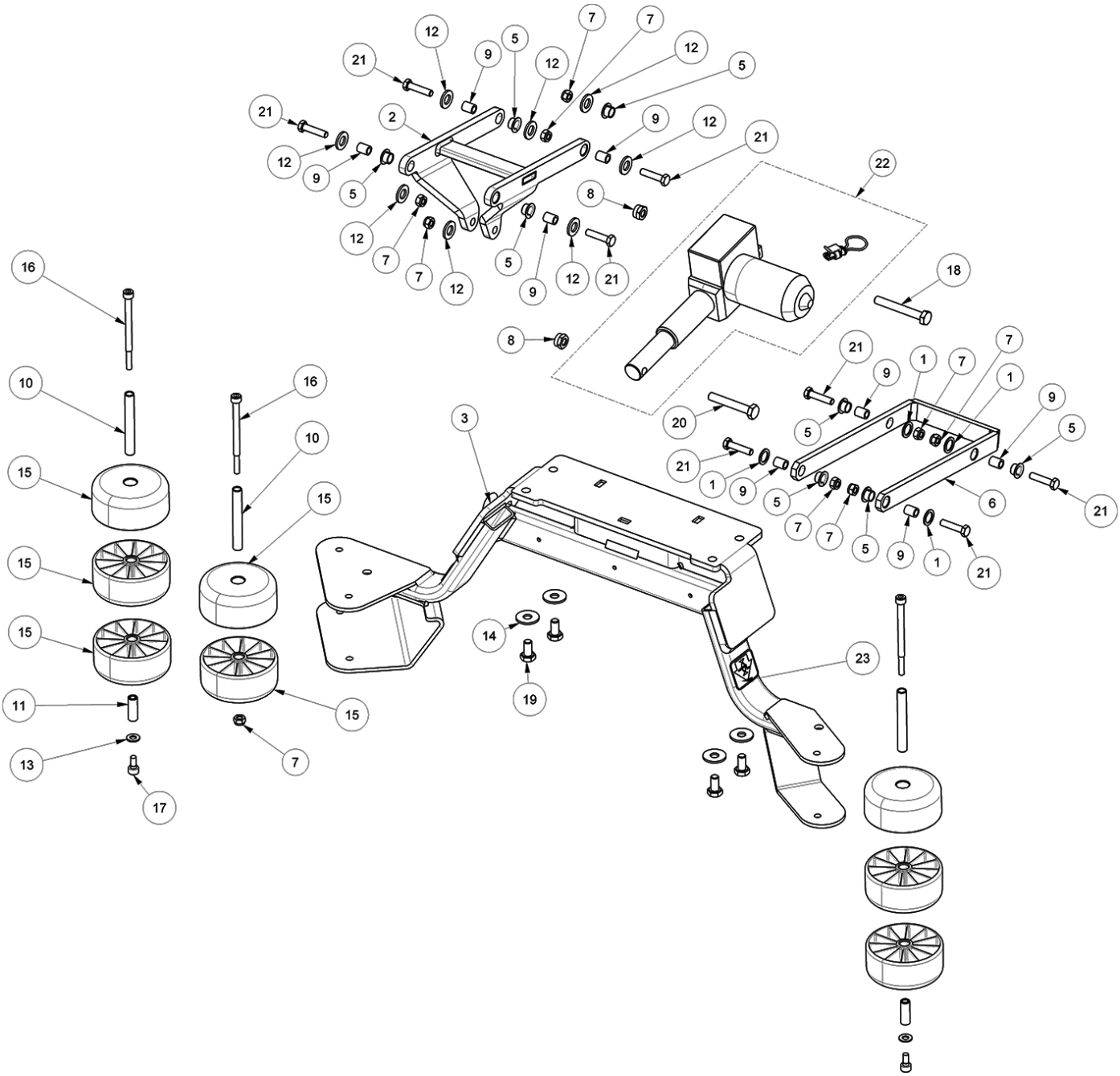

SCRUB HEAD LIFT AND BUMPER GROUP (75cm Cylindrical Brush Model)

Ref.	Part No.	Mfr. Date	Description	Qty.
1	VTRS00376	( )	Washer 15x21	4
2	LAFN08939	( )	Bracket	1
3	LAFN05924	( )	Plate, Assembled, Roll- Bar	1
4	MOCC00304	( )	Actuator Head	1
5	CUVR00130	( )	Bearing, Crawling	8
6	LAFN08912	( )	Arm	1
7	VTDD01701	( )	Nut M8 Inox+Zin.	9
8	897431	( )	Nut Autobl.M10 Inox Din 985	2
9	897526	( )	Bushing, Sleeve, 8b 12d 15l	8
10	LAFN04127	( )	Pin Rullo Paracolpi	3
11	LAFN06472	( )	Pin, Wheel	2
12	897215	( )	Washer, D.12x24, Uni6592, Inox	8
13	897152	( )	Washer, D.8, Uni6592, Inox	2
14	897391	( )	Washer D.10	4
15	RTRT00510	( )	Wheel Bumper Ral7040	8
16	VTVT67560	( )	Screw Tcei M8x110 Inox Aisi 304	3
17	897347	( )	Screw, Tcei, M.8x16	2
18	VTVT01000	( )	Screw Te M 10- 75 Inox Uni 5737	1
19	VTVT13936	( )	Screw, M10x20	4
20	VTVT01002	( )	Screw Te M10x65 Inox	1
21	897243	( )	Screw Te M8x35 Uni5739 Inox	8
22	KTRI02060	( )	Kit Brush Head Actuator Ct160	1
23	N/A	( )	Label (Order Label Kit KTRI06401)	4

SIDE BRUSH GROUP (75cm Cylindrical Brush Model)

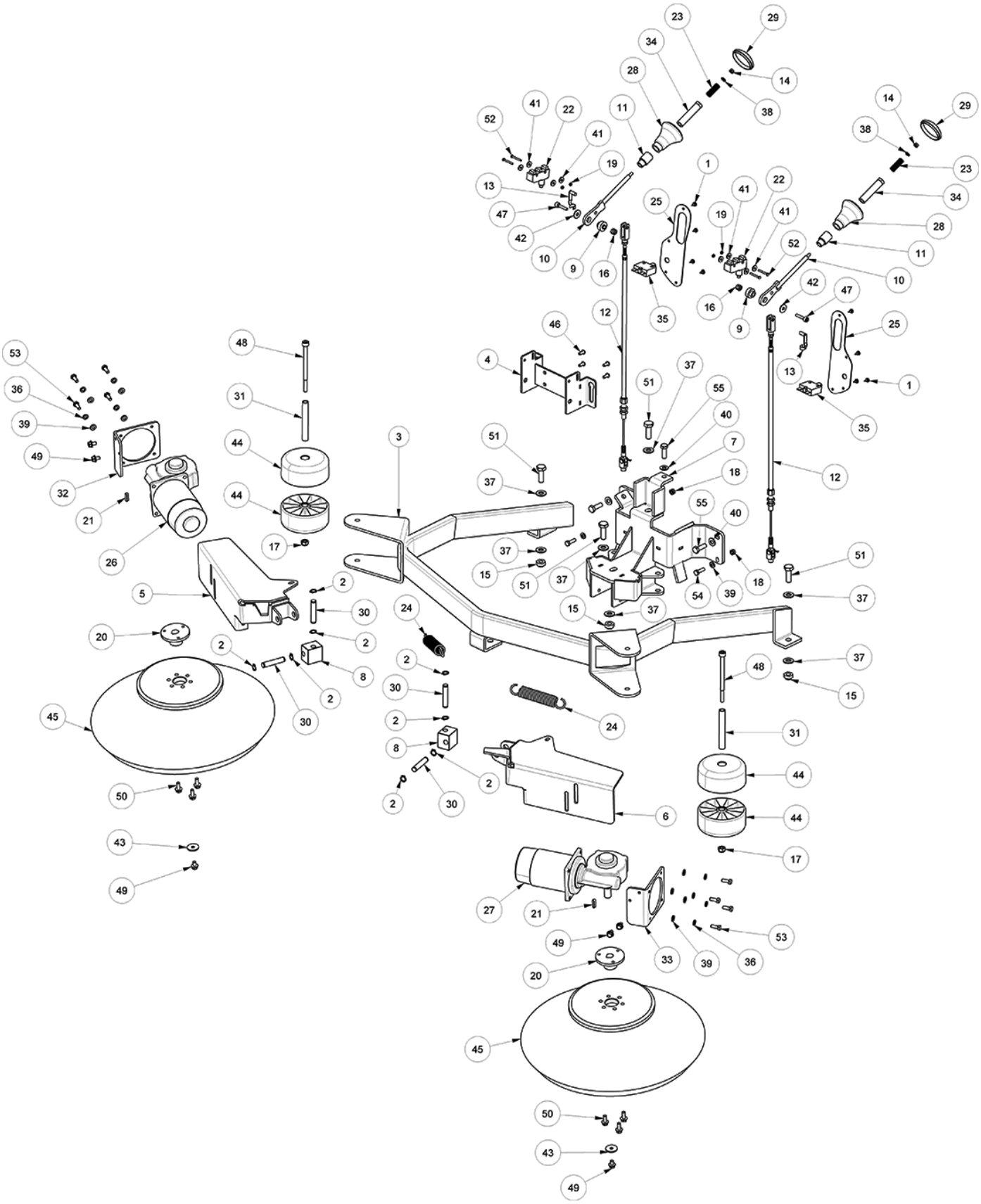

SIDE BRUSH GROUP (75cm Cylindrical Brush Model)

Ref.	Part No.	Mfr. Date	Description	Qty.
1	VTVT85145	( )	Screw Tcb T- Cross 4.2x9.5 Inox	8
2	VTAE87276	( )	Seeger Ext. D10 Din471	8
3	LAFN07598	( )	Housing	1
4	LAFN07597	( )	Bracket	1
5	LAFN07595	( )	Bracket	1
6	LAFN07596	( )	Bracket	1
7	LAFN07594	( )	Support	1
8	LAFN00154	( )	Block Arm Side Brush Tk1050	2
9	LAFN00153	( )	Bushing Lever Lift Brush.Lat.Zinc.	2
10	LAFN00803	( )	Arm Brush Lift Later.1050	2
11	LAFN07612	( )	Bushing -	2
12	CMCV00359	( )	Cable Ct160	2
13	CMCV00009	( )	Clip Uni 1676	2
14	VTDD08171	( )	Nut M 5 Tef	2
15	VTDD00042	( )	Nut Aut.M10 Uni7474	3
16	VTDD00491	( )	Nut M 6 Tef	2
17	VTDD01701	( )	Nut M8 Inox+Zin.	2
18	VTDD01700	( )	Nut, M6, Inox+Zin	2
19	VTDD00001	( )	Nut, M3, Uni5588, Zb	4
20	LAFN45010	( )	Flange L.1400 Lt	2
21	VTVR13165	( )	Key Uni 6604 5x5x20	2
22	MECI75801	( )	Microswitch Tk	2
23	MLML00027	( )	Spring Brush Central Knob	2
24	MLML45102	( )	Spring Tr	2
25	LAFN07599	( )	Cover	2
26	MOCC00366	( )	Motor -	1
27	MOCC00367	( )	Motor -	1
28	MPVR00868	( )	Knob, Lifting Brush	2
29	MPVR00879	( )	Knob, Lifting Brush	2
30	LAFN01148	( )	Side Pin Brush	4
31	LAFN04127	( )	Pin Rullo Paracolpi	2
32	LAFN00808	( )	Plate Side Brush Dx Tk1050	1
33	LAFN00809	( )	Plate Side Brush Sx Tk1050	1
34	LAFN00523	( )	Spring Holder Brush Lift	2
35	METT00040	( )	Fuse, Circuit Breaker, 5a	2
36	897129	( )	Washer, D.6, Grw, Uni1751, Inox	8
37	897432	( )	Washer, D. 10x21, Uni6592, Inox	7
38	VTRS00502	( )	Washer D. 5 0.466 Uni 6592	2
39	897106	( )	Washer, Flat, 6,00x11,00x1,6, Ss	10
40	897152	( )	Washer, D.8, Uni6592, Inox	3
41	VTRS15959	( )	Washer D. 4x12 Uni 6593	8
42	VTRS04026	( )	Washer D. 6x18x2.38	2
43	VTRS63242	( )	Washer D. 6 X24 Zc	2
44	RTRT00510	( )	Wheel Bumper Ral7040	4
45	SPPV75790	( )	Brush, Side, Ppl, Medium (Standard)	2
45	SPPV75794	( )	Brush, Side, Abrv (Option)	2

SIDE BRUSH GROUP (75cm Cylindrical Brush Model) - Contd

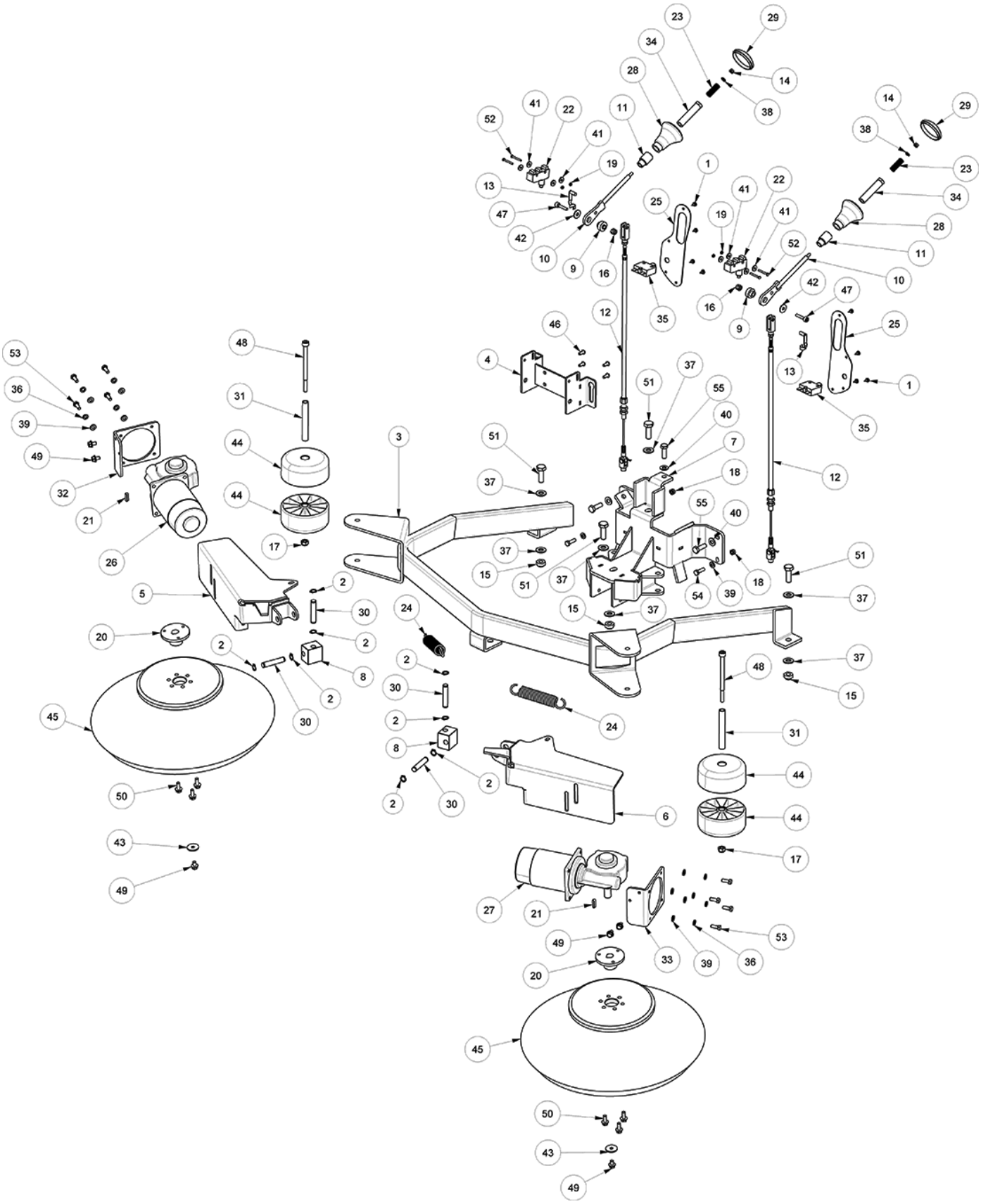

SIDE BRUSH GROUP (75cm Cylindrical Brush Model) - Contd

Ref.	Part No.	Mfr. Date	Description	Qty.
46	897559	( )	Screw Tbce Iso 7380 5x12	4
47	VTVT15966	( )	Screw Tcei M 6x25	2
48	VTVT67560	( )	Screw Tcei M8x110 Inox Aisi 304	2
49	VTVT00527	( )	Screw Te Fr 6x10 Zb Zig.	6
50	VTVT62920	( )	Screw Te F/Rond. M 6x 16 Zb	6
51	VTVT01541	( )	Screw Te, M10x30, Inox,Uni5739	4
52	VTVT00021	( )	Screw Te Uni 5739 3x25 Zb	4
53	897128	( )	Screw Te 6x16 Uni5739	8
54	VTVT13939	( )	Screw, Te, M6x20, Uni5739, Inox	2
55	897233	( )	Screw, Te, M8x25, Uni5739, Inox	3

SQUEEGEE LIFT BRACKET GROUP

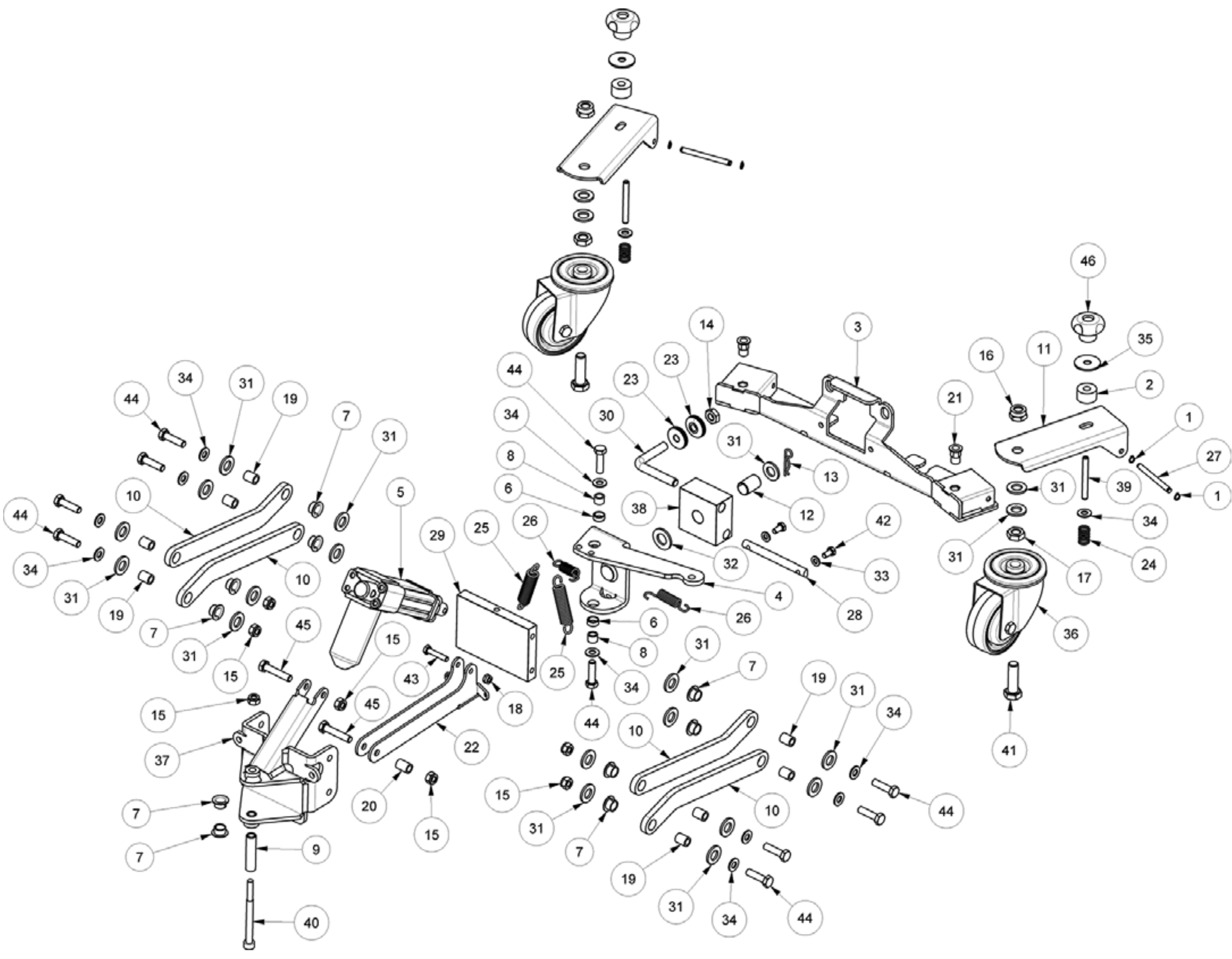

SQUEEGEE LIFT BRACKET GROUP

Ref.	Part No.	Mfr. Date	Description	Qty.
1	VTAE48552	( )	Clip External Din 471 D.6	4
2	ABGO00042	( )	Vibration Damp. Squeegee Castors Ct160	2
3	KTRI05281	( )	Kit, Bracket Squeegee Support [T981]	1
4	LAFN11233	( )	Joint, Squeegee	1
5	MOCC00394	( )	Actuator Squeegee Ct160- 230 36v	1
6	LAFN11228	( )	Bushing	2
7	CUVR00130	( )	Bearing, Crawling	10
8	897336	( )	Bushing D. 9x12x 8.3	2
9	LAFN07879	( )	Bushing -	1
10	LAFN11470	( )	Arm	4
11	LAFN08993	( )	Arm Portaruota Tergi P185	2
12	MPVR05638	( )	Bushing Glycodur	1
13	VTVR47052	( )	Pin, Wire, Split	1
14	39312	( )	Nut , Hex, Std, M10 x 1.50	1
15	VTDD01701	( )	Nut M8 Inox+Zin.	7
16	897241	( )	Nut, M.12, Inox, A2	2
17	39312	( )	Nut , Hex, Std, M12 x 1.75	2
18	VTDD01700	( )	Nut, M6, Inox+Zin	1
19	897526	( )	Bushing, Sleeve, 8b 12d 15l	8
20	LAFN04139	( )	Spacer, Joint, Wiper	1
21	VTVR00022	( )	Insert,Hexagonal,Thread, M8	2
22	LAFN05777	( )	Lever Sollevamento Tergi	1
23	LAFN04136	( )	Knob, Wiper	2
24	MLML00239	( )	Spring For Wheel	2
25	MLML00022	( )	Spring Hook Harness	2
26	MLML00242	( )	Spring Lever Wiper	2
27	LAFN04150	( )	Pin Braccio Ruota Tergi P185	2
28	LAFN04123	( )	Pin Supporto Tergi P.185	1
29	LAFN04125	( )	Plate, Sqge, Mechanism	1
30	LAFN04135	( )	Pin	1
31	897215	( )	Washer, D.12x24, Uni6592, Inox	21
32	897538	( )	Washer D.14	1
33	897106	( )	Washer, Flat, 6,00x11,00x1,6, Ss	2
34	897152	( )	Washer, D.8, Uni6592, Inox	12
35	897375	( )	Washer, D. 8 X32, Uni6593, Inox	2
36	RTRT00518	( )	Wheel Swivel	2
37	LAFN05780	( )	Joint, Doorwiper	1
38	KTRI01864	( )	Block Pivot Squeegee [T981]	1
39	VTVT01355	( )	Screw M8x60 Uni5923	2
40	39281	( )	Screw, Hex, M8 x 125 x 90, 8.8	1
41	06969	( )	Screw, Hex, M12 x 1.75 x 40, 8.8	2
42	897130	( )	Screw, Te, M6x12, Uni5739, A2	2
43	VTVT00433	( )	Screw, M6x30	1
44	897246	( )	Screw, Te, M8x30, Uni5739, Inox	10
45	41342	( )	Screw, Hex, M8 x 1.25 x 40, 8.8	2
46	VTVR35378	( )	Handwheel F 8max20 D.40	2

ACCELERATOR PEDAL GROUP

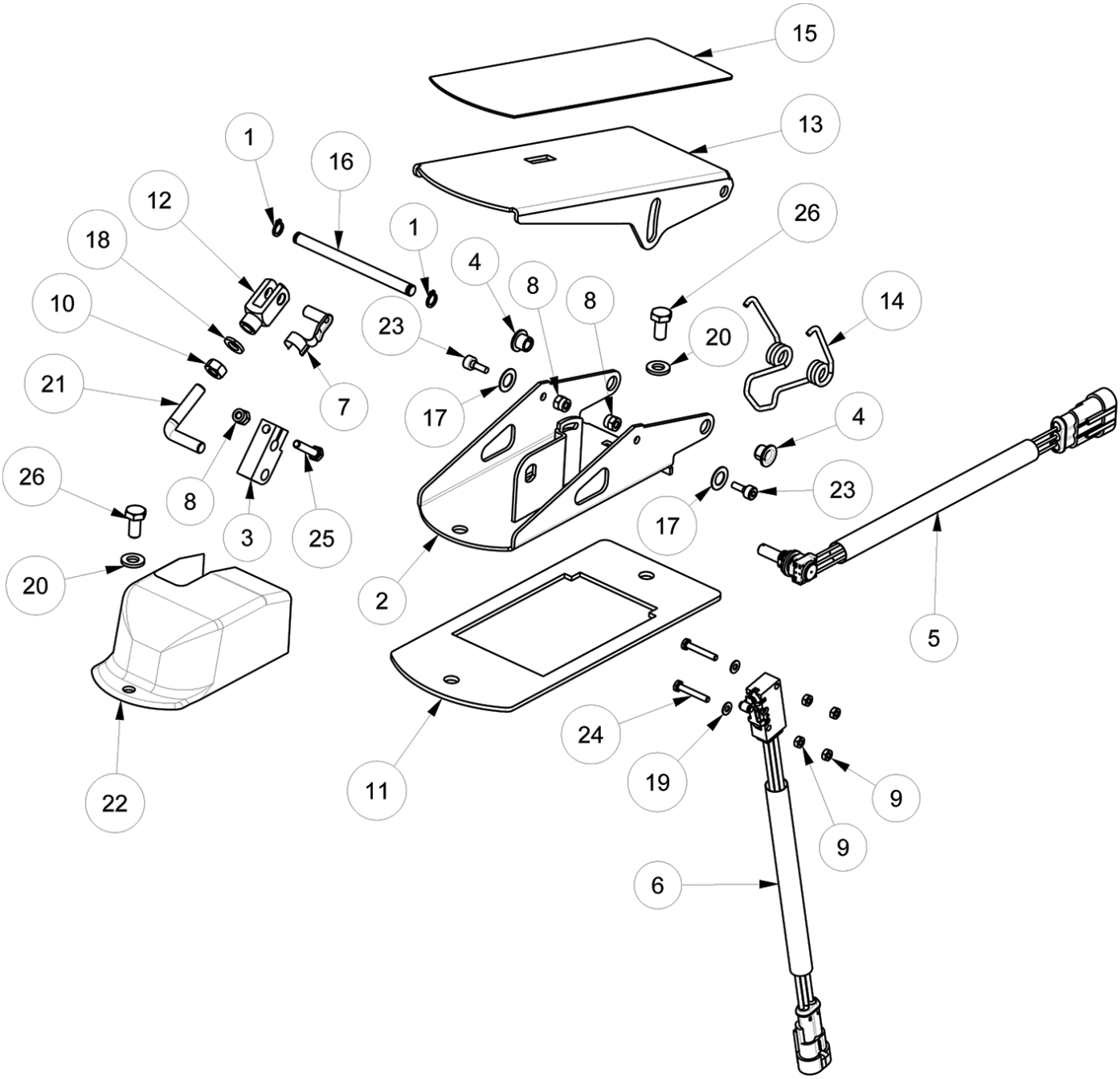

ACCELERATOR PEDAL GROUP

Ref.	Part No.	Mfr. Date	Description	Qty.
1	VTAE48552	( )	Clip External Din 471 D.6	2
2	LAFN07532	( )	Base	1
3	LAFN01149	( )	Rod, Connecting, Pedal Step	1
4	CUVR00183	( )	Bushing	2
5	MECB01227	( )	Potentiometer, Traction	1
6	MECB01228	( )	Contact, Micro, Pedal	1
7	CMCV75717	( )	Clip Uni 1676 M6	1
8	VTDD04369	( )	Nut M 4 Tef Uni 7473	3
9	897189	( )	Nut, M3, Inox	4
10	VTDD00482	( )	Nut M 6 Zin Uni 5588	1
11	LAFN05802	( )	Flange Pedal Accelerator	1
12	CMCV76639	( )	Fork M 6 Uni 1676	1
13	LAFN06474	( )	Sheet Metal Pa. Pedale	1
14	MLML00034	( )	Pedal Spring	1
15	MPVR00866	( )	Plate, Slip	1
16	LAFN00524	( )	Pin Pedal Tk 1050	1
17	MPVR05528	( )	Washer	2
18	897129	( )	Washer, D.6, Grw, Uni1751, Inox	1
19	VTRS00385	( )	Washer Uni 6592 3,2x7x0,5 Inox	2
20	VTRS00503	( )	Washer D. 6 Uni 6592	2
21	LAFN00909	( )	Bracket Pedal Wire	1
22	MPVR00302	( )	Crankcase Feeder Pedal	1
23	VTVT00089	( )	Screw Tcce Uni 5931 4x10 Zb	2
24	VTVT01350	( )	Screw, M3x20	2
25	VTVT00727	( )	Screw Te M 4,20	1
26	897130	( )	Screw, Te, M6x12, Uni5739, A2	2

SCRUB HEAD GROUP (90cm Disk Model)

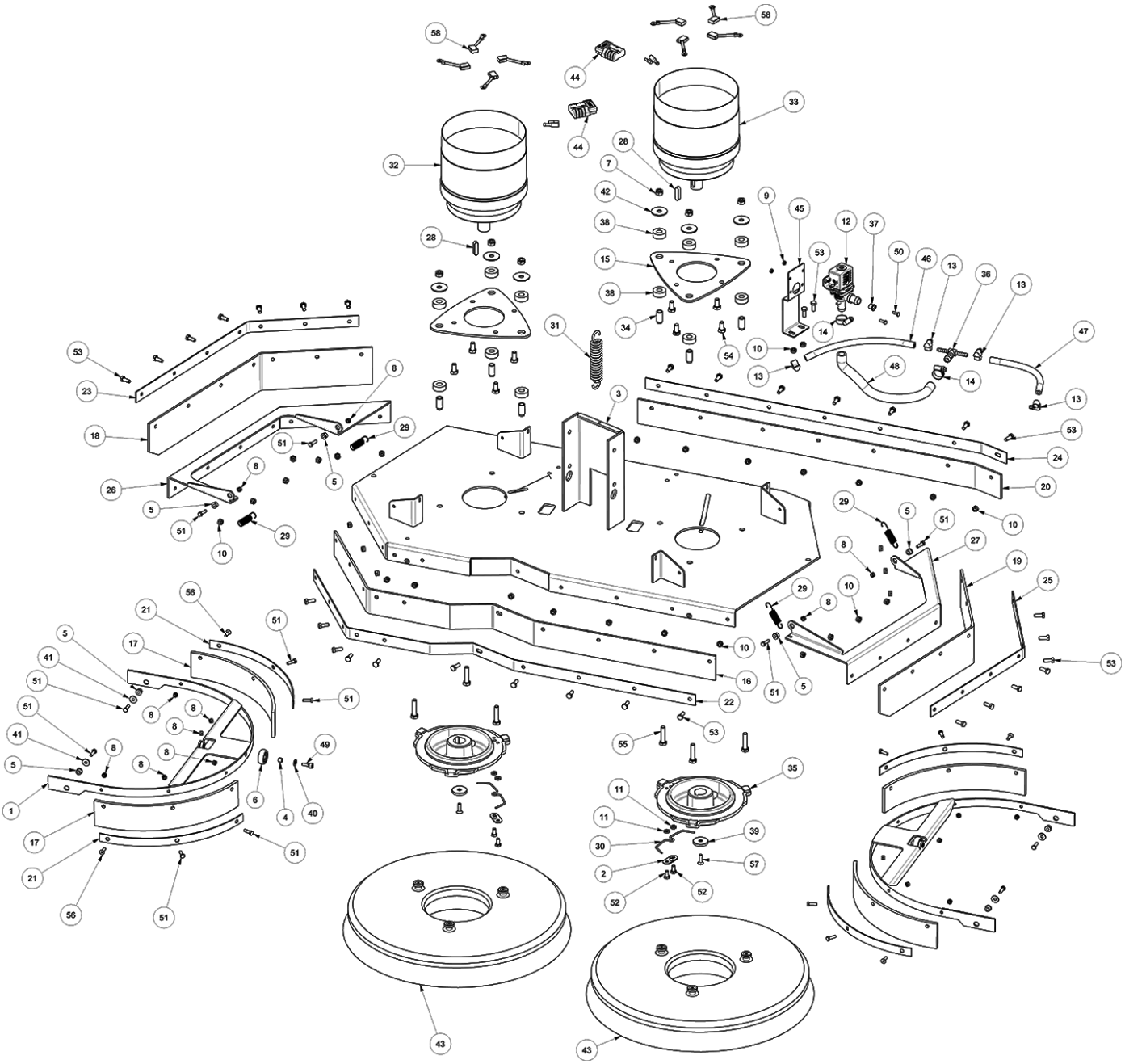

SCRUB HEAD GROUP (90cm Disk Model)

Ref.	Part No.	Mfr. Date	Description	Qty.
1	LAFN11208	( )	Plate	2
2	LAFN05797	( )	Plate, Spring	2
3	LAFN51005	( )	Support, Assembled, Brush	1
4	897231	( )	Bushing	2
5	CUVR00140	( )	Bushing Di Centraggio Spazzole	8
6	897524	( )	Bearing, Ball, 8b 30d 11w	2
7	VTDD01701	( )	Nut M8 Inox+Zin.	6
8	VTDD01693	( )	Nut M 5 Inx	16
9	VTDD00147	( )	Nut M 4 Inx U.5588	2
10	VTDD01700	( )	Nut, M6, Inox+Zin	33
11	LAFN04140	( )	Spacer X Molla	4
12	MEEV00043	( )	Solenoid Valve	1
13	FSVR00096	( )	Clamp 10- 16 Inox	4
14	897362	( )	Clamp, Hose, Wormdrive, 12- 20d	2
15	LAFN05785	( )	Flange Door Motor	2
16	MPVR51008	( )	Flap, Rear	1
17	MPVR51004	( )	Flap Brush Centering Ct160- 95	4
18	MPVR51007	( )	Side Flap Rh Bt95	1
19	MPVR51006	( )	Side Flap Lh Bt95	1
20	MPVR51005	( )	Flap, Rear	1
21	LAFN51010	( )	Plate, Flap	4
22	LAFN51008	( )	Plate, Metal, Flap, Side	1
23	LAFN51003	( )	Plate, Flap, Right	1
24	LAFN51009	( )	Plate, Metal, Flap, Side	1
25	LAFN51002	( )	Plate, Metal, Left	1
26	LAFN51006	( )	Plate, Metal, Right	1
27	LAFN51060	( )	Plate, Metal, Left	1
28	VTVR14052	( )	Key 8x 7x30 Uni 6604a	2
29	MLML02801	( )	Spring Flap Later.	4
30	MLML00240	( )	Spring Spring Retainer Ct160- 230	2
31	MLML00241	( )	Spring Brush Pres. Ct110- 160- 230	1
32	MOCC00390	( )	Motor, Brush, Gearbox	1
33	MOCC00474	( )	Motor.Gearbox Ct160 Sx	1
34	LAFN04141	( )	Pin Plate Motor	6
35	MFVR00139	( )	Drive Disk Aluminium Ct160	2
36	RCVR01711	( )	Connector T Portag.8/10	1
37	MPVR02897	( )	Fitting, Restrictor	1
38	GUGO00264	( )	Washer	12
39	LAFN04146	( )	Washer Fissa Piatti	2
40	897106	( )	Washer, Flat, 6,00x11,00x1,6, Ss	2

SCRUB HEAD GROUP (90cm Disk Model) - Contd

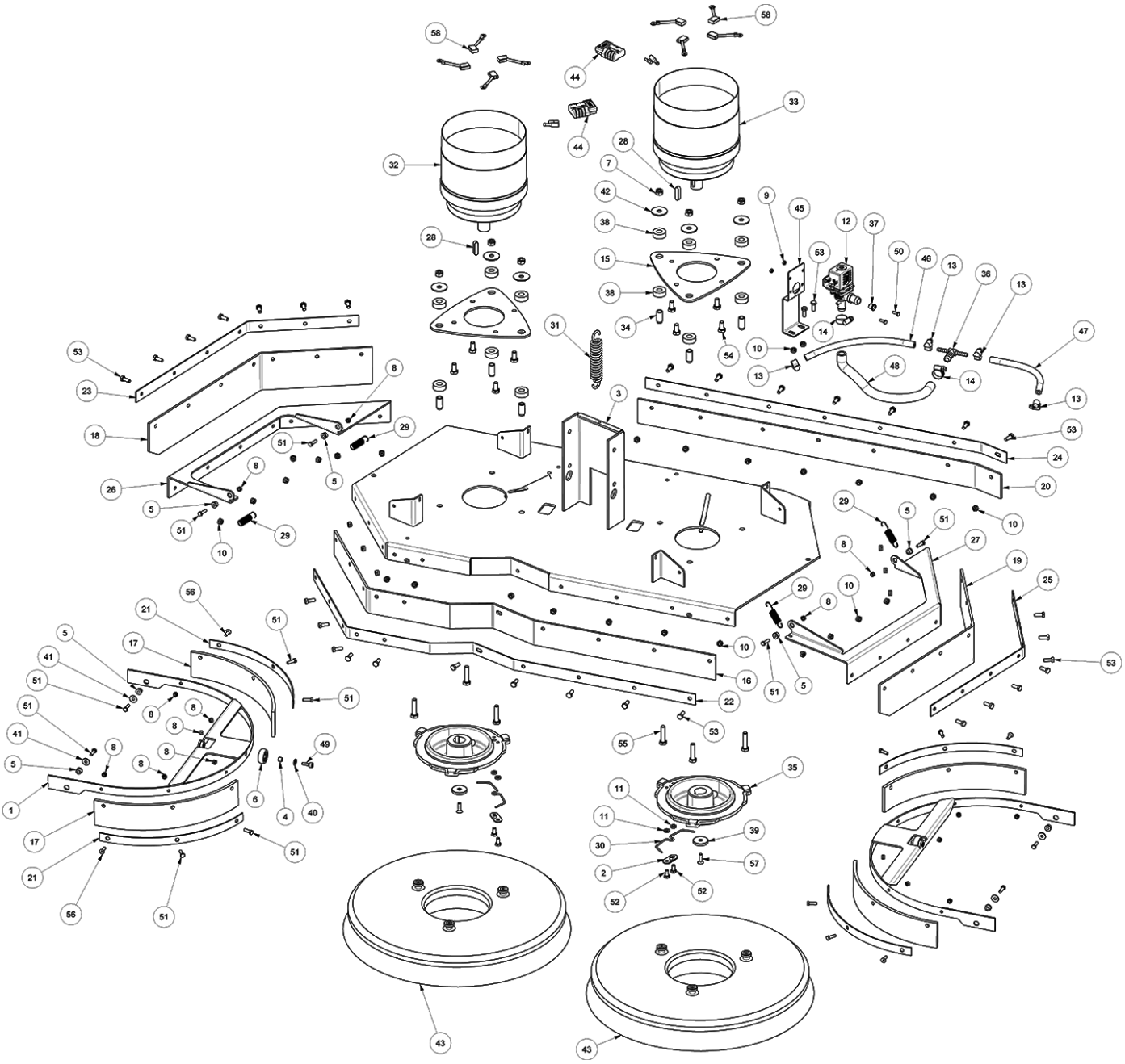

SCRUB HEAD GROUP (90cm Disk Model) - Contd

Ref.	Part No.	Mfr. Date	Description	Qty.
41	897384	( )	Washer, M5x14, Inox	4
42	897375	( )	Washer, D. 8 X32, Uni6593, Inox	6
43	SPPV01539	( )	Brush, Ppl, 48cm (Standard)	2
43	SPPV01540	( )	Brush, Abrv, 48cm (Tynex 120) (Option)	2
43	SPPV01541	( )	Brush, Abrv, 48cm (Tynex 240) (Option)	2
43	SPPV01542	( )	Brush, Abrv, 48cm (Tynex 320) (Option)	2
43	SPPV01543	( )	Brush, Pes, Mix 5, 48cm (Option)	2
44	MEVR07039	( )	Connector Battery Sb50 Gray	2
45	LAFN05835	( )	Bracket, Solenoid Valve	1
46	TBBP00146	( )	Tube	1
47	897256	( )	Tube Flex D.12x3 Armorv.Pvc Tr	1
48	TBBP00146	( )	Tube	1
49	897352	( )	Screw, Tcei, M.6x16	2
50	897453	( )	Screw, Te, M4x12, Uni5739, Inox	2
51	897145	( )	Screw, Te, M5x16, Uni5739, Inox	16
52	897130	( )	Screw, Te, M6x12, Uni5739, A2	4
53	897128	( )	Screw Te 6x16 Uni5739	33
54	897184	( )	Screw, Te, M8x16, Uni5739, A2	8
55	897243	( )	Screw Te M8x35 Uni5739 Inox	6
56	09120	( )	Screw, Flt, Soc, M5 x 0.80 x 16, 10.9	4
57	897277	( )	Screw, Tspei, M6x20, Uni5933	2
58	MEVR05203	( )	Carbon Motor Brush	8

SCRUB HEAD GROUP (75cm Cylindrical Brush Model)

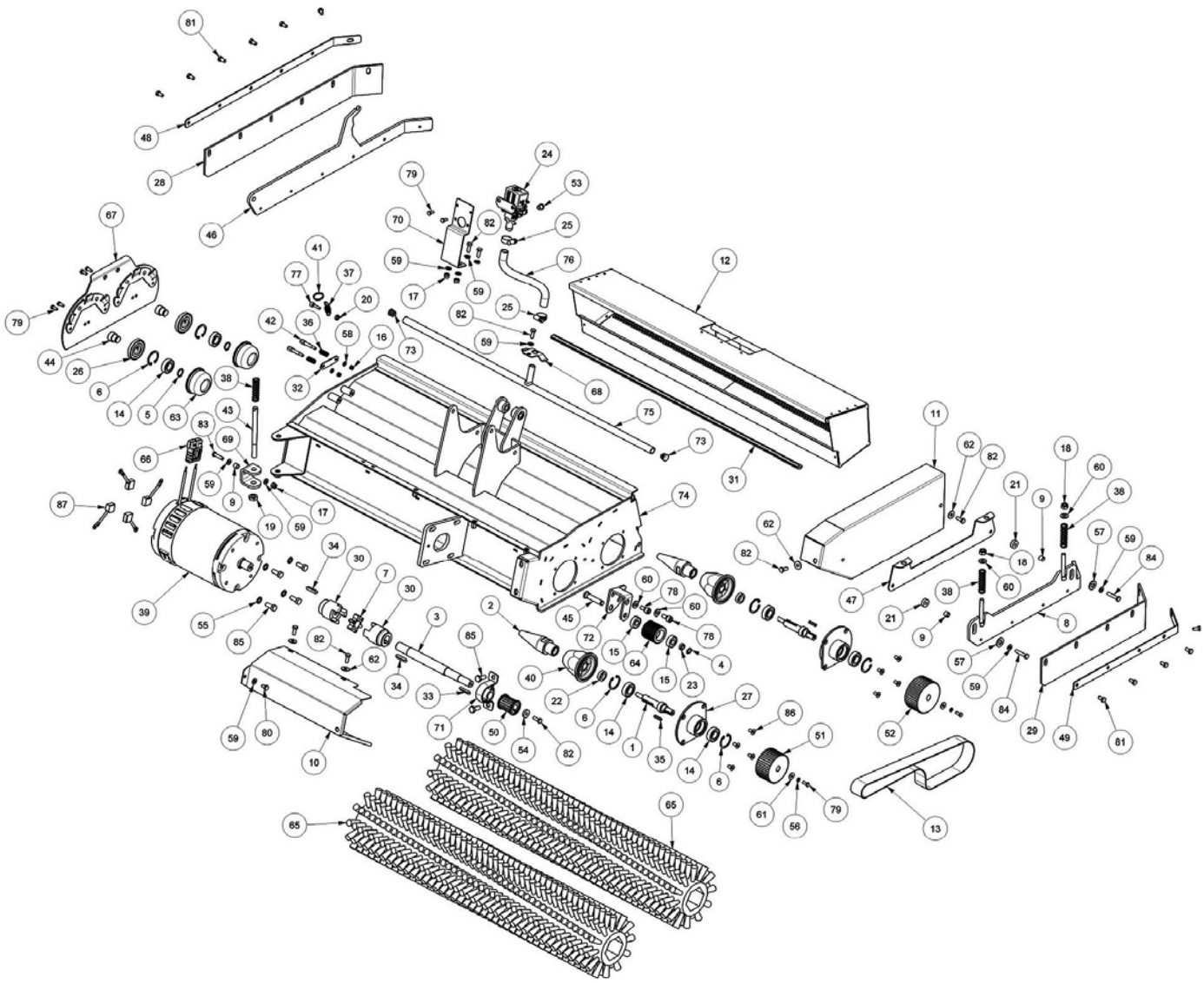

SCRUB HEAD GROUP (75cm Cylindrical Brush Model)

Ref.	Part No.	Mfr. Date	Description	Qty.
1	LAFN10126	( )	Shaft	2
2	LAFN10125	( )	Shaft Brush Insertion	2
3	LAFN09175	( )	Shaft	1
4	VTAE87276	( )	Seeger Ext. D10 Din471	1
5	VTAE17003	( )	Circlip Esterno Din 471 D.15	2
6	VTAE00020	( )	Seeger I32 Din472	6
7	GUVR75740	( )	Ring	1
8	LAFN06397	( )	Door Flap Left Complete	1
9	LAFN04184	( )	Bushing, Roll	3
10	LAFN05891	( )	Crankcase, Crankshaft	1
11	LAFN06393	( )	Crankcase Lh Side	1
12	LAFN05886	( )	Drawer Testata A Rulli Metall.	1
13	MTCG87404	( )	Belt	1
14	CUVR00164	( )	Bearing, Main Brush	6
15	CUVR29964	( )	Ball Bearing 6000- 2rs1	2
16	VTDD08171	( )	Nut M 5 Tef	2
17	VTDD00491	( )	Nut M 6 Tef	3
18	VTDD01701	( )	Nut M8 Inox+Zin.	2
19	VTDD00008	( )	Nut M10 Uni 5589 Zb	1
20	VTDD00053	( )	Nut M6 Inox Uni5589	1
21	LAFN06396	( )	Spacer, Flap, Left	2
22	LAFN10128	( )	Spacer	2
23	LAFN06846	( )	Spacer	1
24	MEEV00043	( )	Solenoid Valve	1
25	897362	( )	Clamp, Hose, Wormdrive, 12- 20d	2
26	LAFN09022	( )	Flange	2
27	LAFN10127	( )	Plate	2
28	MPVR02845	( )	Flap, Side, Right	1
29	MPVR02846	( )	Flap, Side, Left	1
30	FGGT00035	( )	Joint	2
31	MPVR04922	( )	Gasket, Joint	1
32	LAFN07034	( )	Plate, Metal, Shock Door	1
33	VTVR13164	( )	Key Uni 6604 5x5x30	1
34	VTVR16617	( )	Key 6x 6x30 Uni 6604	2
35	VTVR00572	( )	Key 4x4x20	2
36	MLML00248	( )	Spring	2
37	MLML00291	( )	Spring, Flap, Side	1
38	MLML00302	( )	Spring, Recording Flap	3
39	MOCC00166	( )	Motor Test.Roll.P185	1
40	MPVR05137	( )	Hub, Brush	2
41	MLML00292	( )	Spring, Flap, Side	1
42	LAFN04180	( )	Pin, Door Key	2
43	LAFN06395	( )	Pin, Flap, Right	1
44	LAFN09021	( )	Pin Sostegno Spazzola P185	2
45	LAFN06847	( )	Pin Tendicinghia	1

SCRUB HEAD GROUP (75cm Cylindrical Brush Model) - Contd

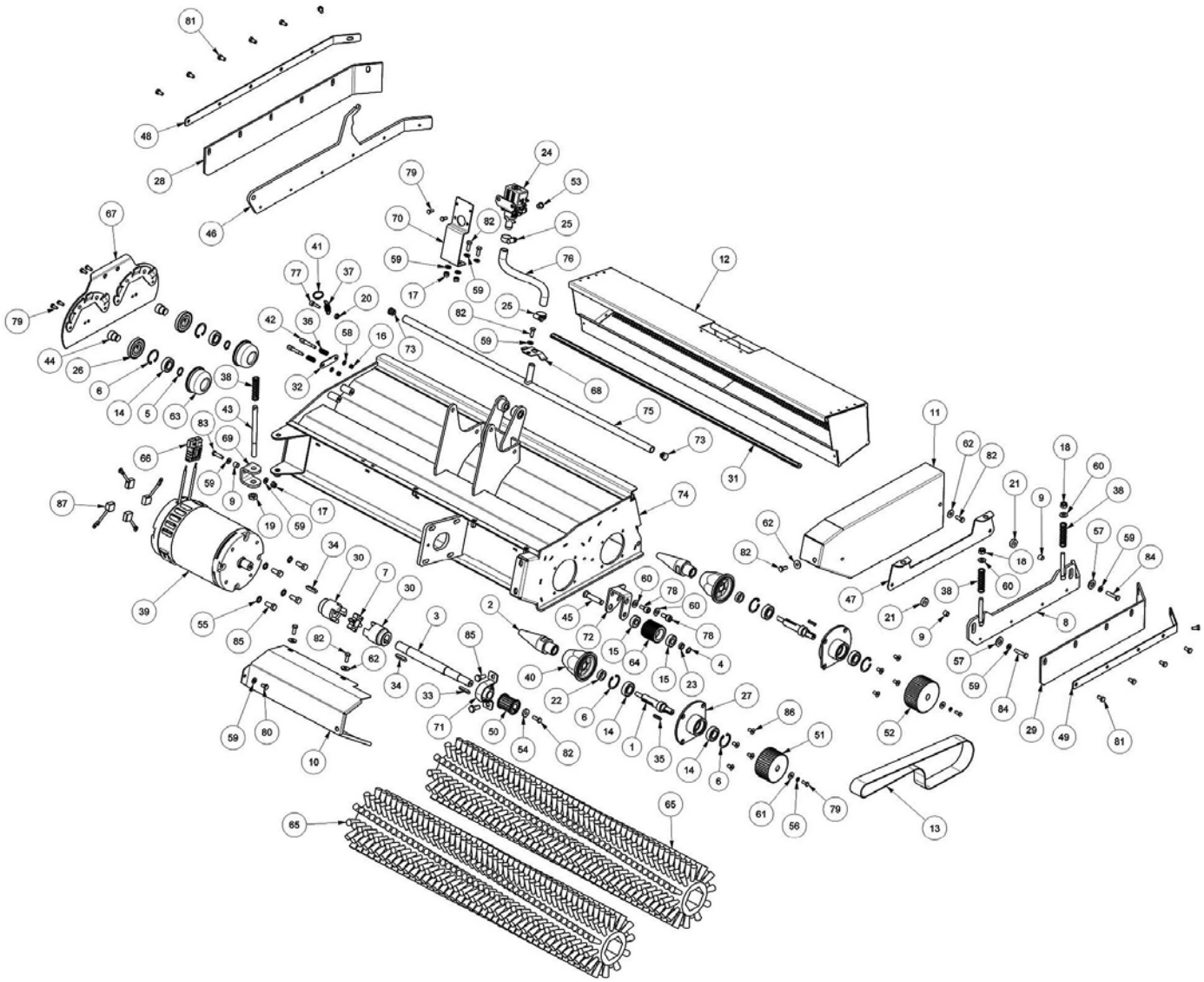

SCRUB HEAD GROUP (75cm Cylindrical Brush Model) - Contd

Ref.	Part No.	Mfr. Date	Description	Qty.
46	LAFN05881	( )	Plate Doorflap Right Head	1
47	LAFN06394	( )	Plate Flap Left	1
48	LAFN05883	( )	Plate Fissa Flap Dx	1
49	LAFN05882	( )	Plate Fixed Flap Left	1
50	MTPL00154	( )	Pulley Motore Testata P185	1
51	MTPL00152	( )	Pulley Rullo Spazzola Anter.P185	1
52	MTPL00153	( )	Pulley Rullo Spazzola	1
53	MPVR02897	( )	Fitting, Restrictor	1
54	LAFN04179	( )	Washer, Fixed, Pulley	1
55	897185	( )	Washer, D. 8, Din6798- A, Inox, A2	4
56	897644	( )	Washer, D.5, Inx, Grw, Uni1751	2
57	897432	( )	Washer, D. 10x21, Uni6592, Inox	2
58	897166	( )	Washer, D. 5, Inox	2
59	VTRS00503	( )	Washer D. 6 Uni 6592	10
60	897152	( )	Washer, D.8, Uni6592, Inox	4
61	VTRS15958	( )	Washer Uni 6592 5x15x1,5 Zb	2
62	897112	( )	Washer, Flat, 6,00x18,00x1,6	4
63	MPVR04720	( )	Roller	2
64	MTPL00193	( )	Roller Z26	1
65	SPPV01286	( )	Brush, Soft, Ppl, 75cm Cyl (Standard)	2
65	SPPV00457	( )	Brush, Med, Ppl, 75cm Cyl (Option)	2
65	SPPV01364	( )	Brush, Soft, Mix 5, 75cm Cyl (Option)	2
65	SPPV01201	( )	Brush, Abrv, 75cm Cyl (Tynex) (Option)	2
66	MEVR07039	( )	Connector Battery Sb50 Gray	1
67	LAFN09020	( )	Door	1
68	LAFN07035	( )	Bracket, Clip, Detergent	1
69	LAFN07033	( )	Bracket, Flap, Left	1
70	LAFN05835	( )	Bracket, Solenoid Valve	1
71	CUVR00170	( )	Ball Bearing Sbpp 203	1
72	LAFN06848	( )	Support Tendicinghia	1
73	MPVR05163	( )	Rod, Filter	2
74	LAFN09023	( )	Roller Brush Frame	1
75	LAFN05885	( )	Hose, Detergent, Distribution	1
76	897256	( )	Tube Flex D.12x3 Armorv.Pvc Tr	1
77	VTVT06237	( )	Screw Tcei 6x20 Uni5931	1
78	897347	( )	Screw, Tcei, M.8x16	2
79	897459	( )	Screw, M5x12, Te, Inox	8
80	897177	( )	Screw, Te, M6x10, Inox	1
81	897130	( )	Screw, Te, M6x12, Uni5739, A2	11
82	897128	( )	Screw Te 6x16 Uni5739	8
83	897532	( )	Screw, Te, M6x25, Uni5739, Inox	1
84	VTVT00433	( )	Screw, M6x30	2
85	897316	( )	Screw, Te, M8x20, Uni5739, Inox	6
86	VTVT00678	( )	Screw	8
87	MEVR33562	( )	Carbon 10x18x18 400w 12v	4

SQUEEGEE GROUP (90cm Disk Model)

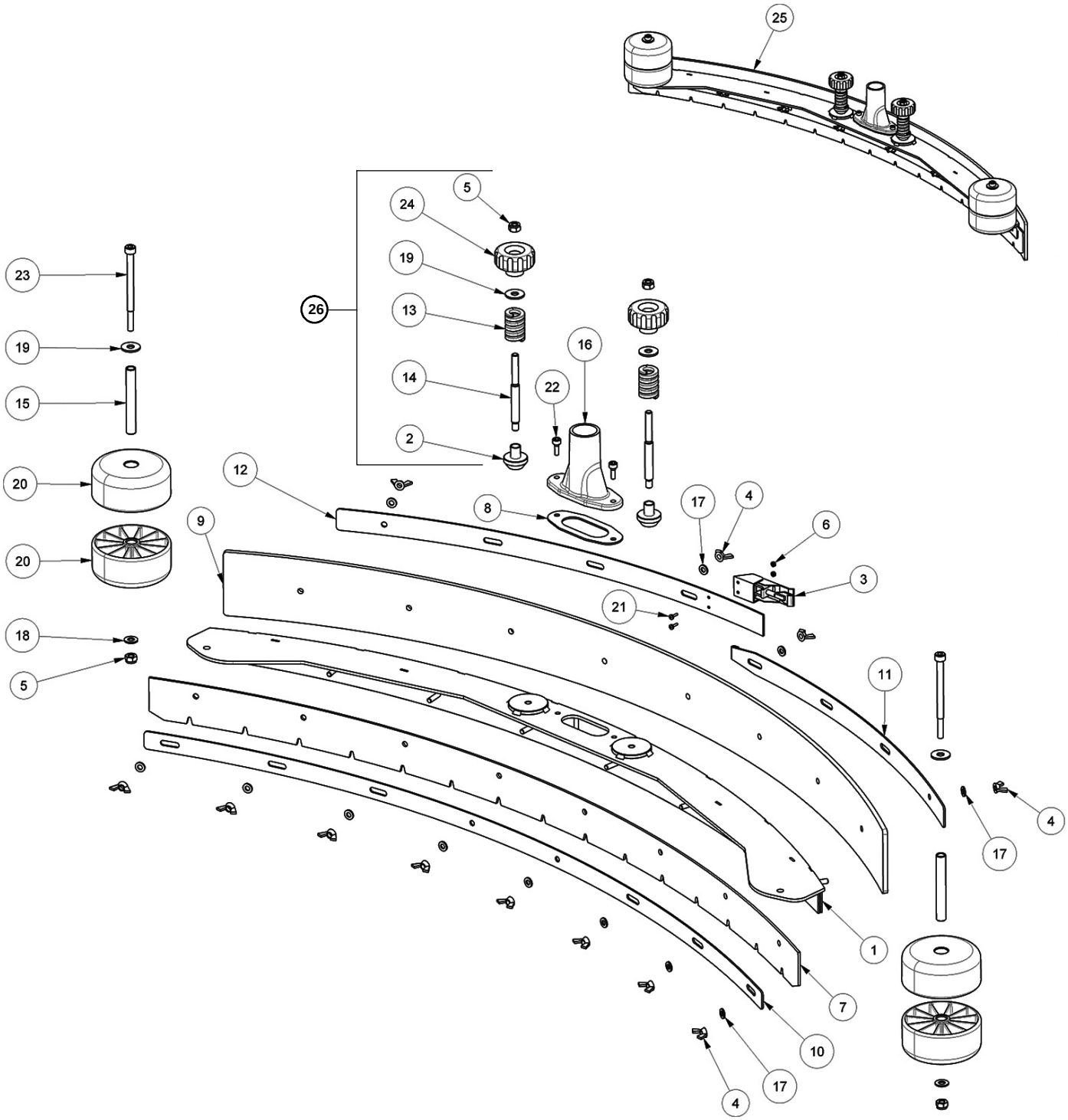

SQUEEGEE GROUP (90cm Disk Model)

Ref.	Part No.	Mfr. Date	Description	Qty.
1	LAFN05913	( )	Plate, Metal, Wiper	1
2	LAFN11395	( )	Bushing Squeegee	2
3	CHVR00050	( )	Closure A Leva + Gancio Clt 160	1
4	VTDD00171	( )	Nut M6 Inox	12
5	VTDD01701	( )	Nut M8 Inox+Zin.	4
6	897189	( )	Nut, M3, Inox	2
7	MPVR06553	( )	Blade, Sqge, Front, Linatex 117cm (Standard)	1
7	MPVR02850	( )	Blade, Sqge, Front, Nat Rub 117cm (Option)	1
7	MPVR13251	( )	Blade, Sqge, Front, Pu 117cm (Option)	1
8	GUGO06700	( )	Gasket Squeegee	1
9	MPVR06554	( )	Blade, Sqge, Rear, Linatex 121cm (Standard)	1
9	MPVR05884	( )	Blade, Sqge, Rear, Latex 121cm (Option)	1
9	MPVR51009	( )	Blade, Sqge, Rear Pu 121cm (Option)	1
10	LAFN05914	( )	Plate, Fixed Flap, Front	1
11	LAFN05915	( )	Plate, Fixed Flap, Rear	1
12	LAFN05916	( )	Plate, Flap, Rear	1
13	MLML00502	( )	Spring Squeegee	2
14	LAFN11394	( )	Pin Squeegee	2
15	LAFN04127	( )	Pin Rullo Paracolpi	2
16	MPVR04626	( )	Flange Suction Hose Connection	1
17	897106	( )	Washer, Flat, 6,00x11,00x1,6, Ss	12
18	897152	( )	Washer, D.8, Uni6592, Inox	2
19	897120	( )	Washer, D.8x24, Uni6593, Inox	4
20	RTRT00510	( )	Wheel Bumper Ral7040	4
21	897203	( )	Screw	2
22	897352	( )	Screw, Tcei, M.6x16	2
23	VTVT67560	( )	Screw Tcei M8x110 Inox Aisi 304	2
24	VTVR00047	( )	Knob D.50 M8	2
25	PMVR06916	( )	Sqge Asy, W/ Linatex Blades, 90/95	1
26	KTRI05628	( )	Kit New Squeegee Knobs	1

SQUEEGEE GROUP (75cm Cylindrical Brush Model)

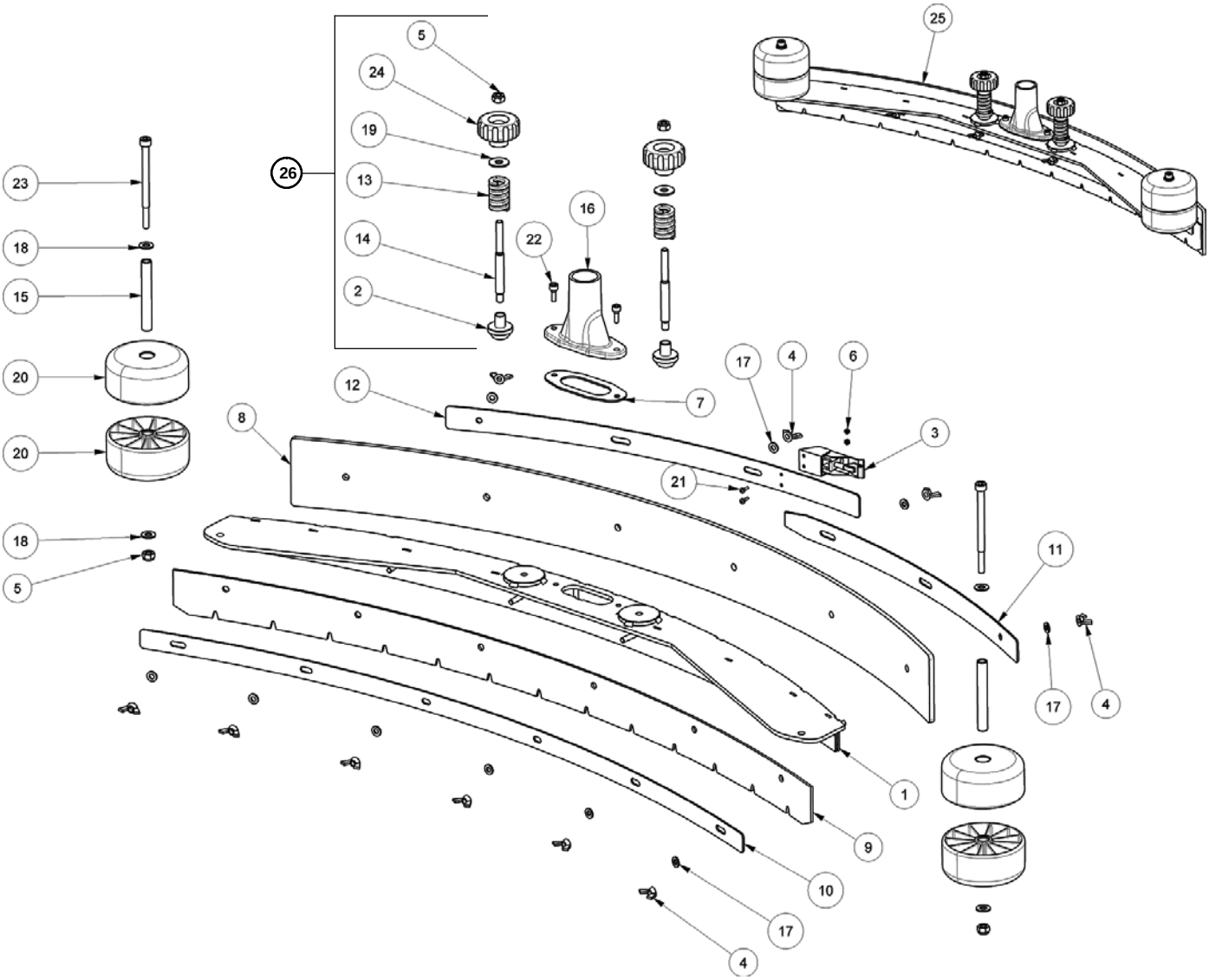

SQUEEGEE GROUP (75cm Cylindrical Brush Model)

Ref.	Part No.	Mfr. Date	Description	Qty.
1	LAFN05773	( )	Assembled Tergitore 850	1
2	LAFN11395	( )	Bushing Squeegee	2
3	CHVR00050	( )	Closure A Leva + Gancio Clt 160	1
4	VTDD00171	( )	Nut M6 Inox	10
5	VTDD01701	( )	Nut M8 Inox+Zin.	4
6	897189	( )	Nut, M3, Inox	2
7	GUGO06700	( )	Gasket Squeegee	1
8	MPVR06552	( )	Blade, Sqge, Rear, Linatex 104cm (Standard)	1
8	MPVR05883	( )	Blade, Sqge, Rear, Latex 104cm (Option)	1
8	MPVR02832	( )	Blade, Sqge, Rear, Pu 104cm (Option)	1
9	MPVR06551	( )	Blade, Sqge, Front, Linatex 102cm (Standard)	1
9	MPVR02830	( )	Blade, Sqge, Front, Nat Rub 102cm (Option)	1
9	MPVR13250	( )	Blade, Sqge, Front, Pu 102cm (Option)	1
10	LAFN05770	( )	Sheet Metal Pa. Fissa Flap Anteriore	1
11	LAFN05771	( )	Plate, Fixed Flap	1
12	LAFN05772	( )	Plate. Flap	1
13	MLML00502	( )	Spring Squeegee	2
14	LAFN11394	( )	Pin Squeegee	2
15	LAFN04127	( )	Pin Rullo Paracolpi	2
16	MPVR04626	( )	Flange Suction Hose Connection	1
17	897106	( )	Washer, Flat, 6,00x11,00x1,6, Ss	10
18	897152	( )	Washer, D.8, Uni6592, Inox	4
19	897120	( )	Washer, D.8x24, Uni6593, Inox	2
20	RTRT00510	( )	Wheel Bumper Ral7040	4
21	897203	( )	Screw	2
22	897352	( )	Screw, Tcei, M.6x16	2
23	VTVT67560	( )	Screw Tcei M8x110 Inox Aisi 304	2
24	VTVR00047	( )	Knob D.50 M8	2
25	PMVR06915	( )	Sqge Asy W/ Linatex Blades, 75/80	1
26	KTRI05628	( )	Kit New Squeegee Knobs	1

CONTROL PANEL GROUP

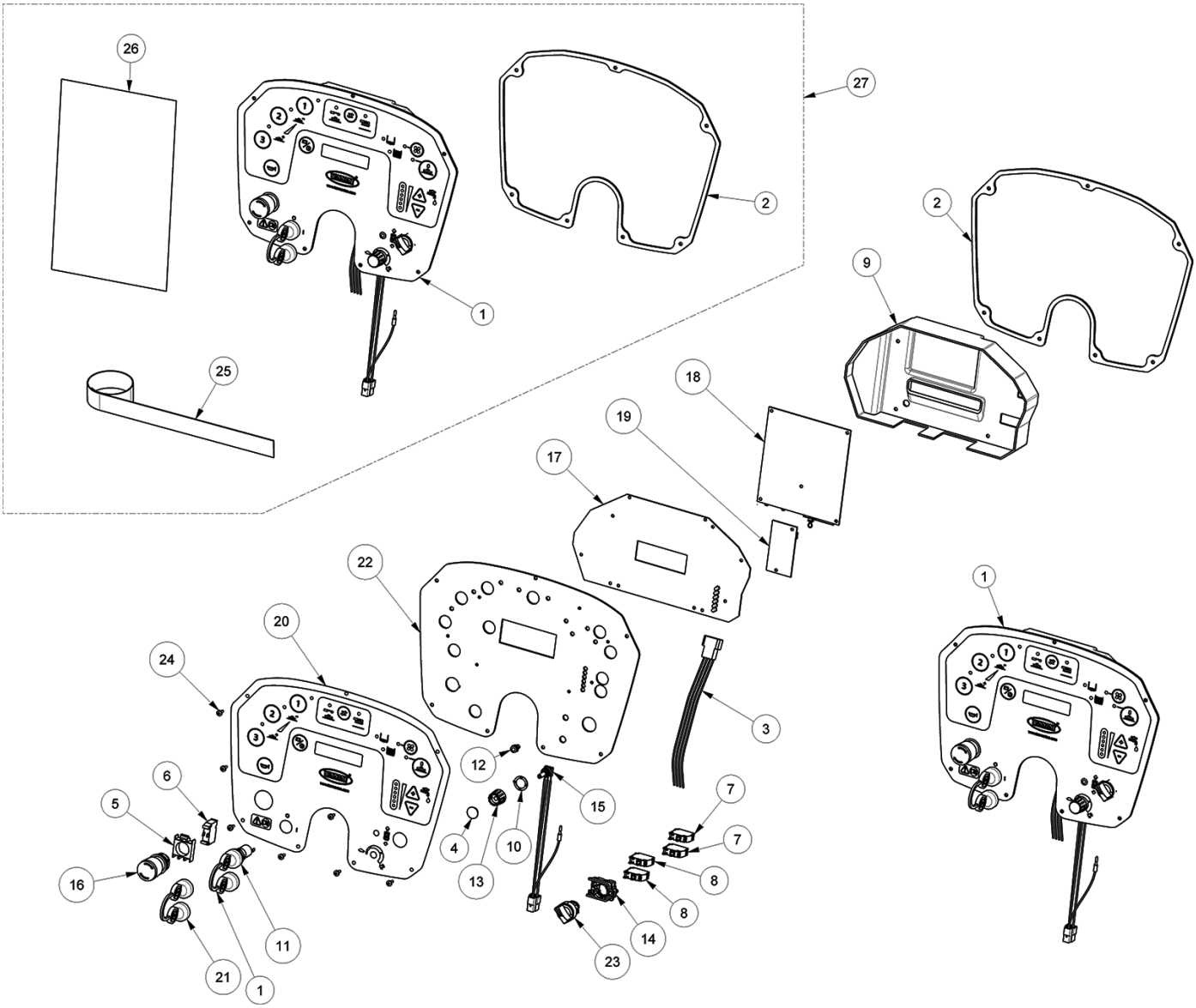

CONTROL PANEL GROUP

Ref.	Part No.	Mfr. Date	Description	Qty.
1	MECE00898	( )	Panel Assy, Membrane	1
2	GUGO00702	( )	Gasket	1
3	MECB02035	( )	Wiring	1
4	MEVR01575	( )	Cap 2202	1
5	MECI00583	( )	Bracket	1
6	MECI00584	( )	Contact	1
7	MEVR02012	( )	Contact	2
8	MEVR02039	( )	Contact	2
9	MPVR05840	( )	Cover	1
10	MEVR01574	( )	Ring Nut 2204	1
11	MECI00723	( )	Switch, Key	1
12	MECB01250	( )	Light, Led	1
13	MEVR01573	( )	Small Knob 2200 V6	1
14	MEVR02038	( )	Support -	1
15	KTRI05576	( )	Kit Potentiometer Speed Contr	1
16	MECI00582	( )	Switch	1
17	KTRI06415	( )	Kit, Display Board	1
18	KTRI06416	( )	Kit, Board, Logic	1
19	KTRI06417	( )	Kit, Board Interface	1
20	N/A	( )	Label (Order Label Kit KTRI06401)	1
21	MEVR02703	( )	Key, Spare Battery	1
22	LAFN11719	( )	Support	1
23	MEVR02011	( )	Selector	1
24	897180	( )	Screw, M4x10, Tcb, Tc, Inox	7
25	MEVR02709	( )	Strap, Static	1
26	PLDC04564	( )	Manual, Instr	1
27	KTRI06405*	( )	Kit, Display	1

*** Requires Tennant *True* service or an authorized Tennant service provider.**

STEERING COLUMN GROUP (90CM Disk Model)

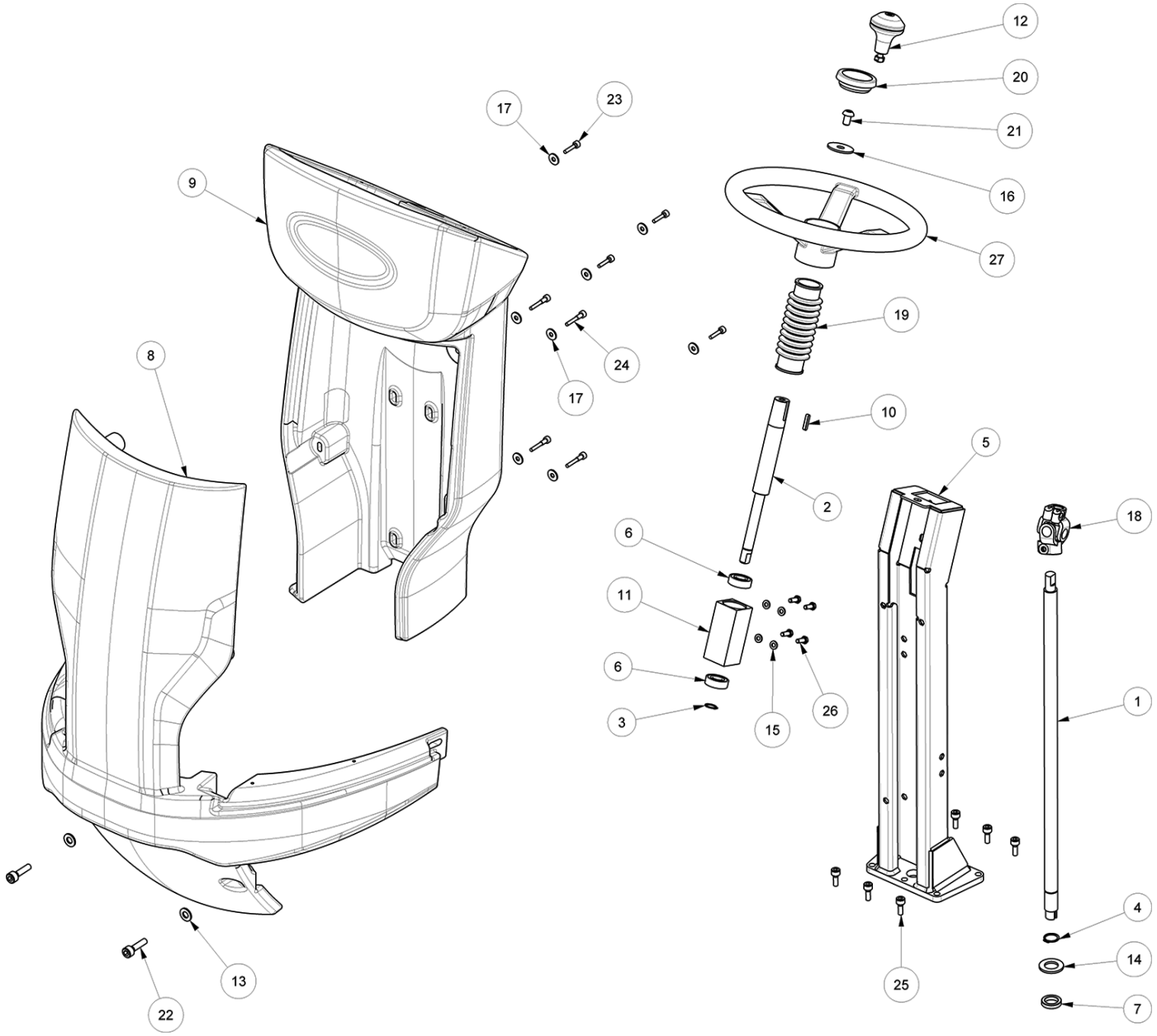

STEERING COLUMN GROUP (90CM Disk Model)

Ref.	Part No.	Mfr. Date	Description	Qty.
1	LAFN04131	( )	Shaft, Steering, Lower	1
2	LAFN04076	( )	Shaft, Upper Steering	1
3	VTAE17003	( )	Circlip Esterno Din 471 D.15	1
4	897280	( )	Circlip, D. 20, Uni7435	1
5	LAFN05787	( )	Support	1
6	CUVR17004	( )	Ball Bearing 6202 - 2rs1	2
7	LAFN07029	( )	Spacer -	1
8	MPVR13190	( )	Covering Front	1
9	MPVR13191	( )	Covering Rear	1
10	VTVR33667	( )	Key Uni 6604 5x5x25	1
11	LAFN04133	( )	Hub, Steering Shaft	1
12	MPVR47040	( )	Knob, Small, Steeringwheel	1
13	897432	( )	Washer, D. 10x21, Uni6592, Inox	2
14	897288	( )	Washer, Uni6592, Foro 20, Inox	1
15	897106	( )	Washer, Flat, 6,00x11,00x1,6, Ss	4
16	897401	( )	Washer, M10x40x2,5, Uni6593, Zb	1
17	897112	( )	Washer, Flat, 6,00x18,00x1,6	8
18	897397	( )	Joint, Steering	1
19	897408	( )	Bellows, Shaft, Steering	1
20	MPVR47026	( )	Black Cap L.14	1
21	VTVT47025	( )	Screw Tbce Iso 7380 10x16 Zb	1
22	41358	( )	Screw, Soc, M10 x 1.50 x 35, 12.9	2
23	VTVT12255	( )	Screw Tcce Uni 5931 6x25 Zb	4
24	30556	( )	Screw, Soc, M6 x 1.00 x 35, 12.9	4
25	897377	( )	Screw Tcei M8x20 Uni5931 Inox	6
26	VTVT01531	( )	Screw Te 6x 16 Uni 5739	4
27	897400	( )	Wheel, Steering 320mm	1

STEERING COLUMN GROUP (75CM Cylindrical Brush Model)

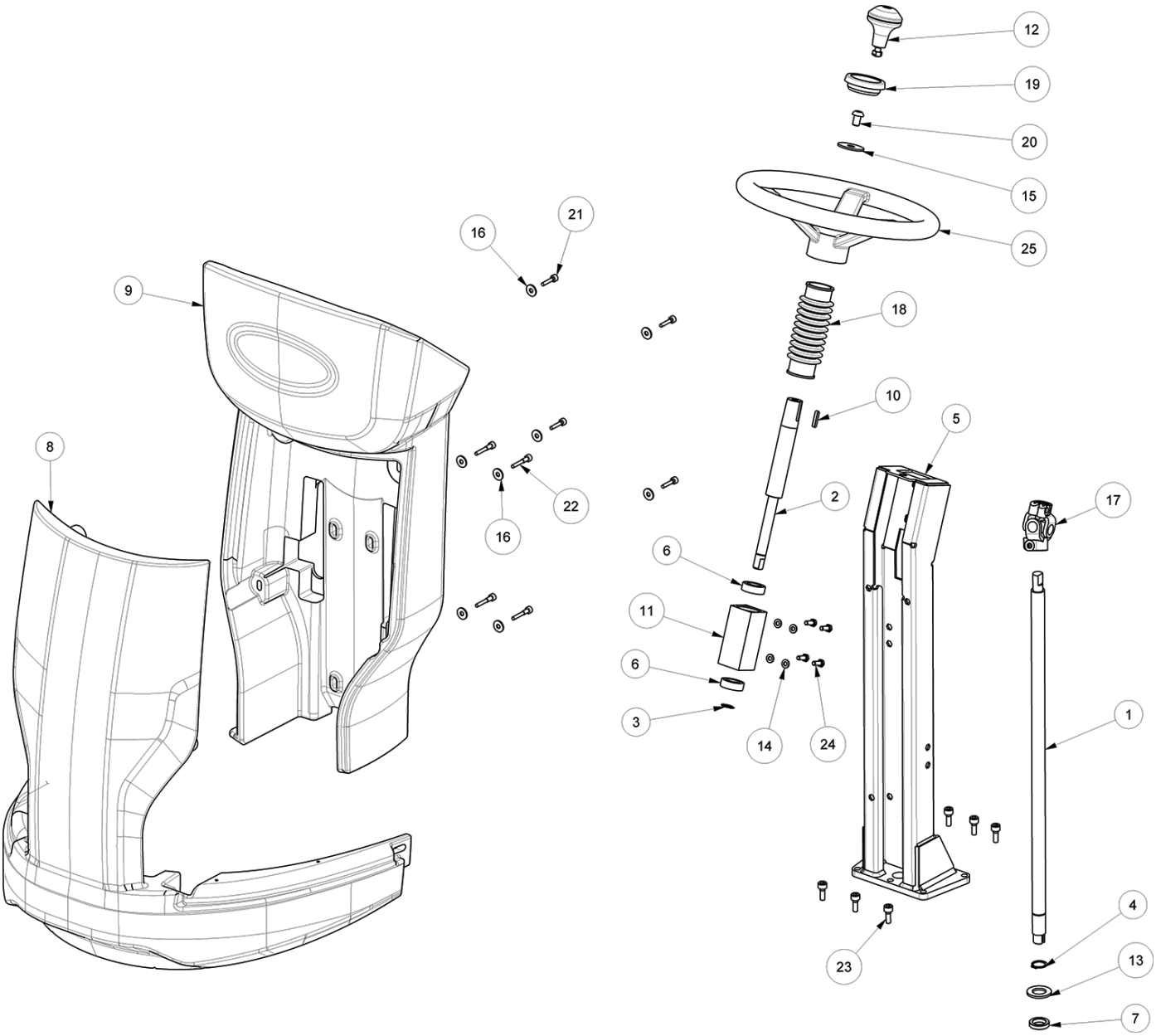

STEERING COLUMN GROUP (75CM Cylindrical Brush Model)

Ref.	Part No.	Mfr. Date	Description	Qty.
1	LAFN04131	( )	Shaft, Steering, Lower	1
2	LAFN04076	( )	Shaft, Upper Steering	1
3	VTAE17003	( )	Circlip Esterno Din 471 D.15	1
4	897280	( )	Circlip, D. 20, Uni7435	1
5	LAFN05787	( )	Support	1
6	CUVR17004	( )	Ball Bearing 6202 - 2rs1	2
7	LAFN07029	( )	Spacer -	1
8	MPVR13221	( )	Crankcase Front	1
9	MPVR13220	( )	Crankcase Rear	1
10	VTVR33667	( )	Key Uni 6604 5x5x25	1
11	LAFN04133	( )	Hub, Steering Shaft	1
12	MPVR47040	( )	Knob, Small, Steeringwheel	1
13	897288	( )	Washer, Uni6592, Foro 20, Inox	1
14	897106	( )	Washer, Flat, 6,00x11,00x1,6, Ss	4
15	897401	( )	Washer, M10x40x2,5, Uni6593, Zb	1
16	897112	( )	Washer, Flat, 6,00x18,00x1,6	8
17	897397	( )	Joint, Steering	1
18	897408	( )	Bellows, Shaft, Steering	1
19	MPVR47026	( )	Black Cap L.14	1
20	VTVT47025	( )	Screw Tbce Iso 7380 10x16 Zb	1
21	VTVT12255	( )	Screw Tcce Uni 5931 6x25 Zb	4
22	30556	( )	Screw, Soc, M6 x 1.00 x 35, 12.9	4
23	897377	( )	Screw Tcei M8x20 Uni5931 Inox	6
24	VTVT01531	( )	Screw Te 6x 16 Uni 5739	4
25	897400	( )	Wheel, Steering 320mm	1

ELECTRICAL COMPONENT GROUP (90CM Disk Model)

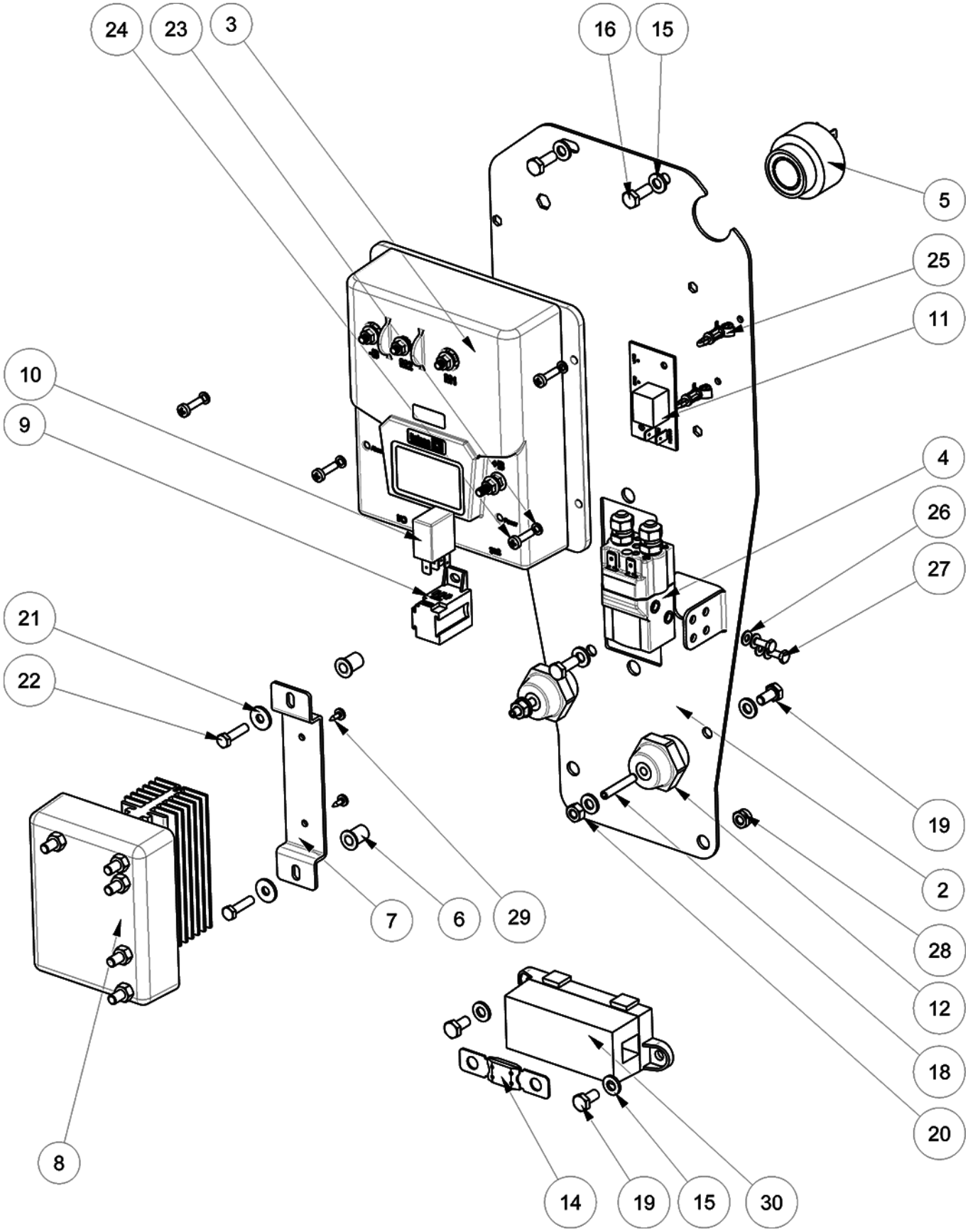

ELECTRICAL COMPONENT GROUP (90CM Disk Model)

Ref.	Part No.	Mfr. Date	Description	Qty.
2	LAFN11848	( )	Plate	1
3	MECE00927	( )	Panel, Board 7ch4q162 150a 24- 36v	1
4	METT00086	( )	Contactor 100a	1
5	MEVR01436	( )	Buzzer	1
6	MPVR13464	( )	Bushing	2
7	LAFN11849	( )	Plate	1
8	MECE00526	( )	Board Power Service Ct160- Ct230	1
9	MEVR02888	( )	Base Te V23333- Z1001- B045	1
10	MECE00456	( )	Relay, Brush Head	1
11	MECE00755	( )	Panel, Claxton	1
12	MEVR47082	( )	Insulator	2
14	MEVR01925	( )	Fuse 150a	1
15	897106	( )	Washer, Flat, 6,00x11,00x1,6, Ss	9
16	897128	( )	Screw Te 6x16 Uni5739	3
18	VTVT00900	( )	Grub Screw M 6- 30 Con Es	2
19	897130	( )	Screw, Te, M6x12, Uni5739, A2	4
20	897405	( )	Nut, M6, Uni5588, Inox, A2	2
21	897384	( )	Washer, M5x14, Inox	2
22	897170	( )	Screw, Te, M5x20	2
23	897204	( )	Washer, D.4, Grover, Uni1751, A2	4
24	897359	( )	Screw, Tctc, M4x16, Acciaio, Inox	4
25	MEVR01708	( )	Column	2
26	897156	( )	Washer, D. 4, Inox	4
27	897151	( )	Screw, Te, M4x10, Inox	2
28	VTDD01700	( )	Nut, M6, Inox+Zin	2
29	VTVT00040	( )	Screw	2
30	MEVR00146	( )	Fuse Box	1

ELECTRICAL COMPONENT GROUP (75CM Cylindrical Brush Model)

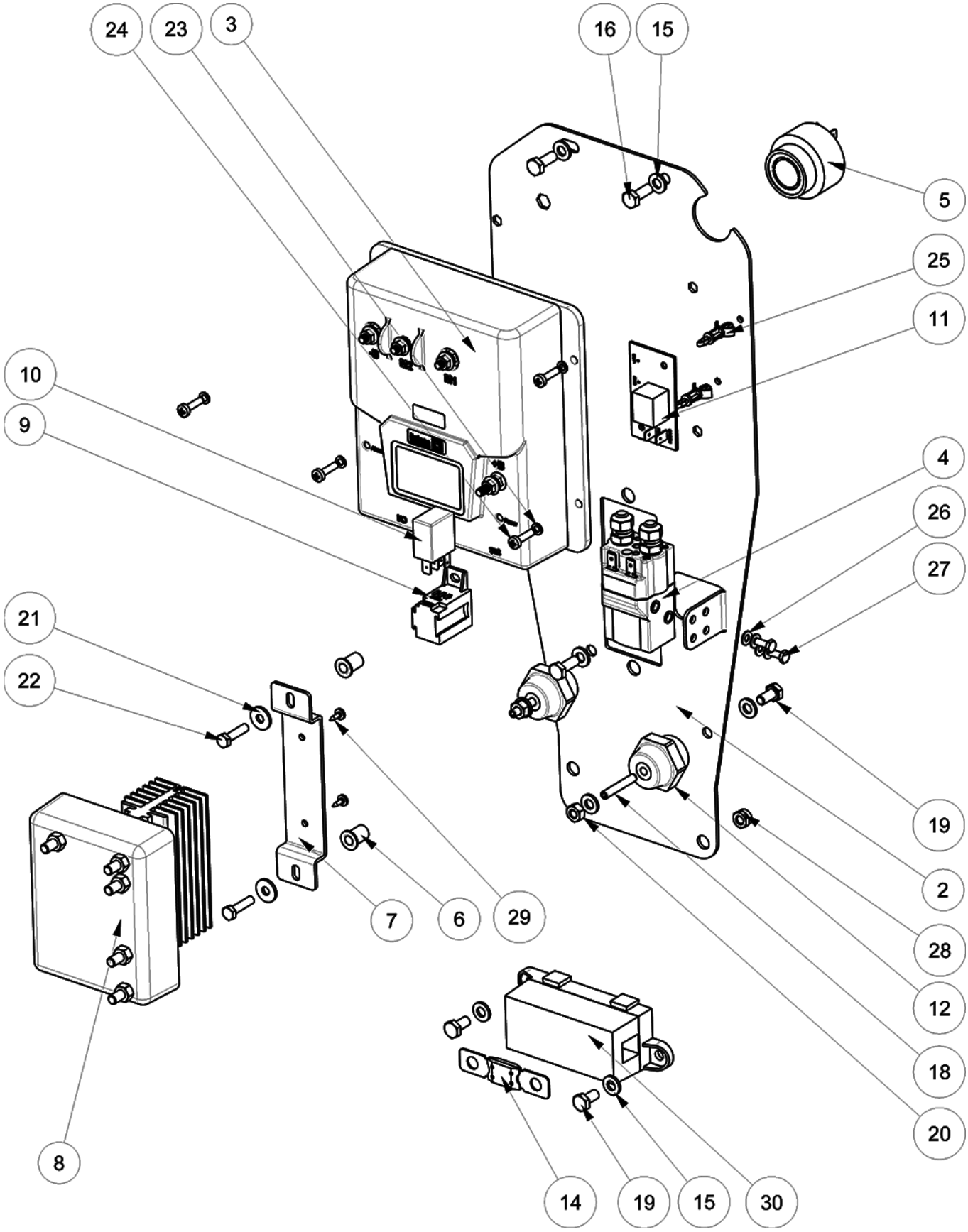

ELECTRICAL COMPONENT GROUP (75CM Cylindrical Brush Model)

Ref.	Part No.	Mfr. Date	Description	Qty.
2	LAFN11848	( )	Plate	1
3	MECE00927	( )	Panel, Board 7ch4q162 150a 24- 36v	1
4	METT00086	( )	Contactor 100a	1
5	MEVR01436	( )	Buzzer	1
6	MPVR13464	( )	Bushing	2
7	LAFN11849	( )	Plate	1
8	MECE00526	( )	Board Power Service Ct160- Ct230	1
9	MEVR02888	( )	Base Te V23333- Z1001- B045	1
10	MECE00456	( )	Relay, Brush Head	1
11	MECE00755	( )	Panel, Claxton	1
12	MEVR47082	( )	Insulator	2
14	MEVR01925	( )	Fuse 150a	1
15	897106	( )	Washer, Flat, 6,00x11,00x1,6, Ss	9
16	897128	( )	Screw Te 6x16 Uni5739	3
18	VTVT00900	( )	Grub Screw M 6- 30 Con Es	2
19	897130	( )	Screw, Te, M6x12, Uni5739, A2	4
20	897405	( )	Nut, M6, Uni5588, Inox, A2	2
21	897384	( )	Washer, M5x14, Inox	2
22	897170	( )	Screw, Te, M5x20	2
23	897204	( )	Washer, D.4, Grover, Uni1751, A2	4
24	897359	( )	Screw, Tctc, M4x16, Acciaio, Inox	4
25	MEVR01708	( )	Column	2
26	897156	( )	Washer, D. 4, Inox	4
27	897151	( )	Screw, Te, M4x10, Inox	2
28	VTDD01700	( )	Nut, M6, Inox+Zin	2
29	VTVT00040	( )	Screw	2
30	MEVR00146	( )	Fuse Box	1

BATTERY COMPARTMENT GROUP (90CM Disk Model)

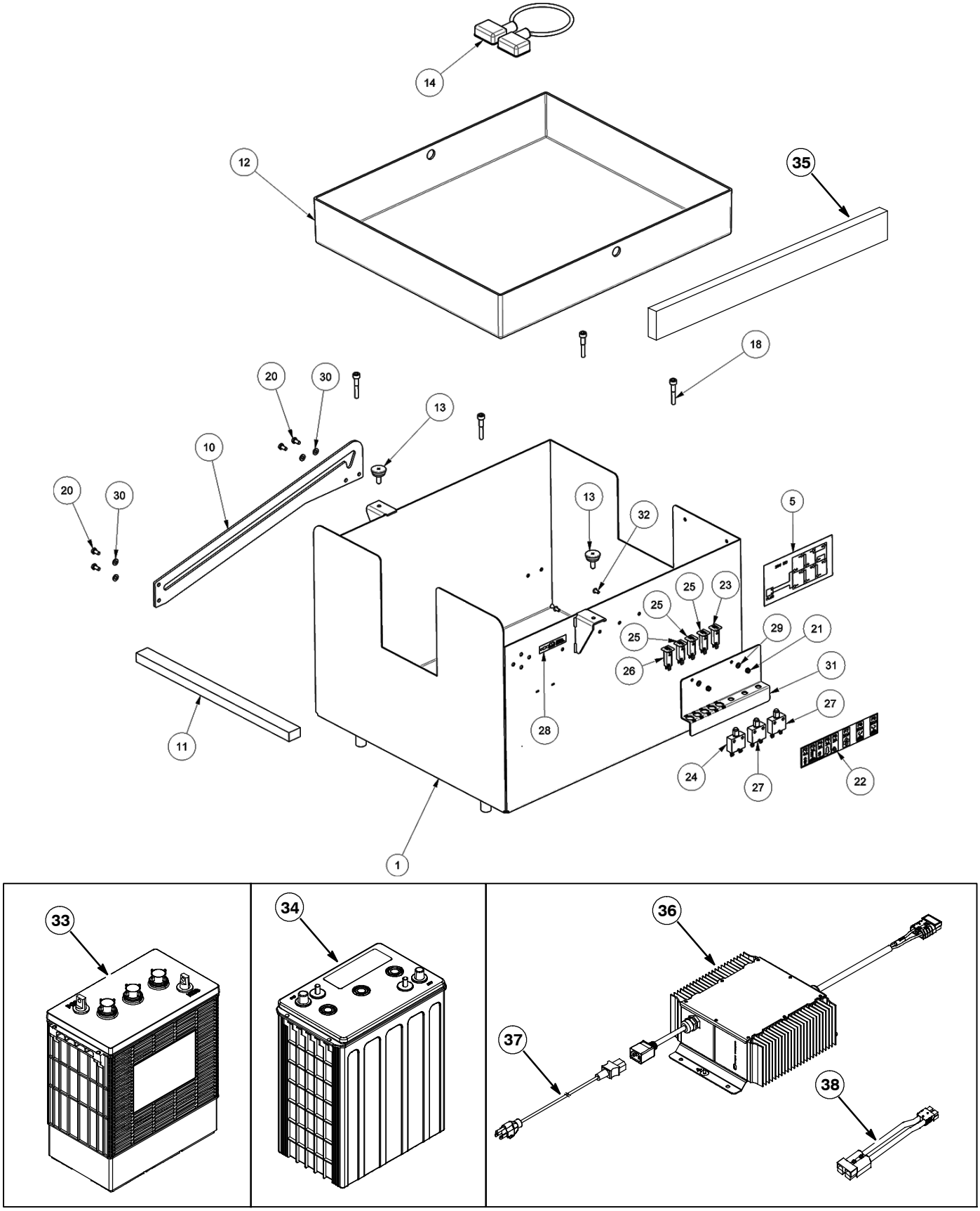

BATTERY COMPARTMENT GROUP (90CM Disk Model)

Ref.	Part No.	Mfr. Date	Description	Qty.
1	LAFN11769	( )	Support Battery Cpl P160 S/T	1
5	N/A	( )	Label (Order Label Kit KTRI06401)	1
10	LAFN05807	( )	Plate, Tank Rod	1
11	MPVR04744	( )	Gasket	1
12	MPVR04127	( )	Plate, Box, Battery	1
13	VTVR00038	( )	Knob	2
14	897357	( )	Battery, Bridge, M8, 70	5
18	VTVT00889	( )	Screw Tcei M. 8- 45	4
20	897130	( )	Screw, Te, M6x12, Uni5739, A2	4
21	VTDD01693	( )	Nut M 5 Inx	2
22	N/A	( )	Label (Order Label Kit KTRI06401)	1
23	METT00135	( )	Fuse 2a	1
24	METT00132	( )	Fuse 30a	1
25	METT00136	( )	Fuse 3a	3
26	METT00137	( )	Fuse 4a	1
27	METT00138	( )	Fuse 50a	2
28	N/A	( )	Label (Order Label Kit KTRI06401)	1
29	897166	( )	Washer, D. 5, Inox	2
30	897106	( )	Washer, Flat, 6,00x11,00x1,6, Ss	4
31	LAFN11743	( )	Bracket	1
32	VTVT00805	( )	Screw Tbei M. 5- 10	2
33	1070587	( )	Battery, Wet, 06vdc 0360ah, W/ Cart [Tr]	6
34	1262287	( )	Battery, Agm, 06vdc 350ah	6
35	222473	( )	Spacer, Battery, Foam, 0.75 X 3.0 X 21.0	2
36	1043662	( )	Charger, 36vdc 21a 85- 265vac 1ph 45/65hz	1
37	1017079	( )	Cord, Extn, 16ga /3, 10ft [Sjt]	1
38	223679	( )	Cable Assy, 06GA Red/Blk. 050A/175A	1

BATTERY COMPARTMENT GROUP (75CM Cylindrical Brush Model)

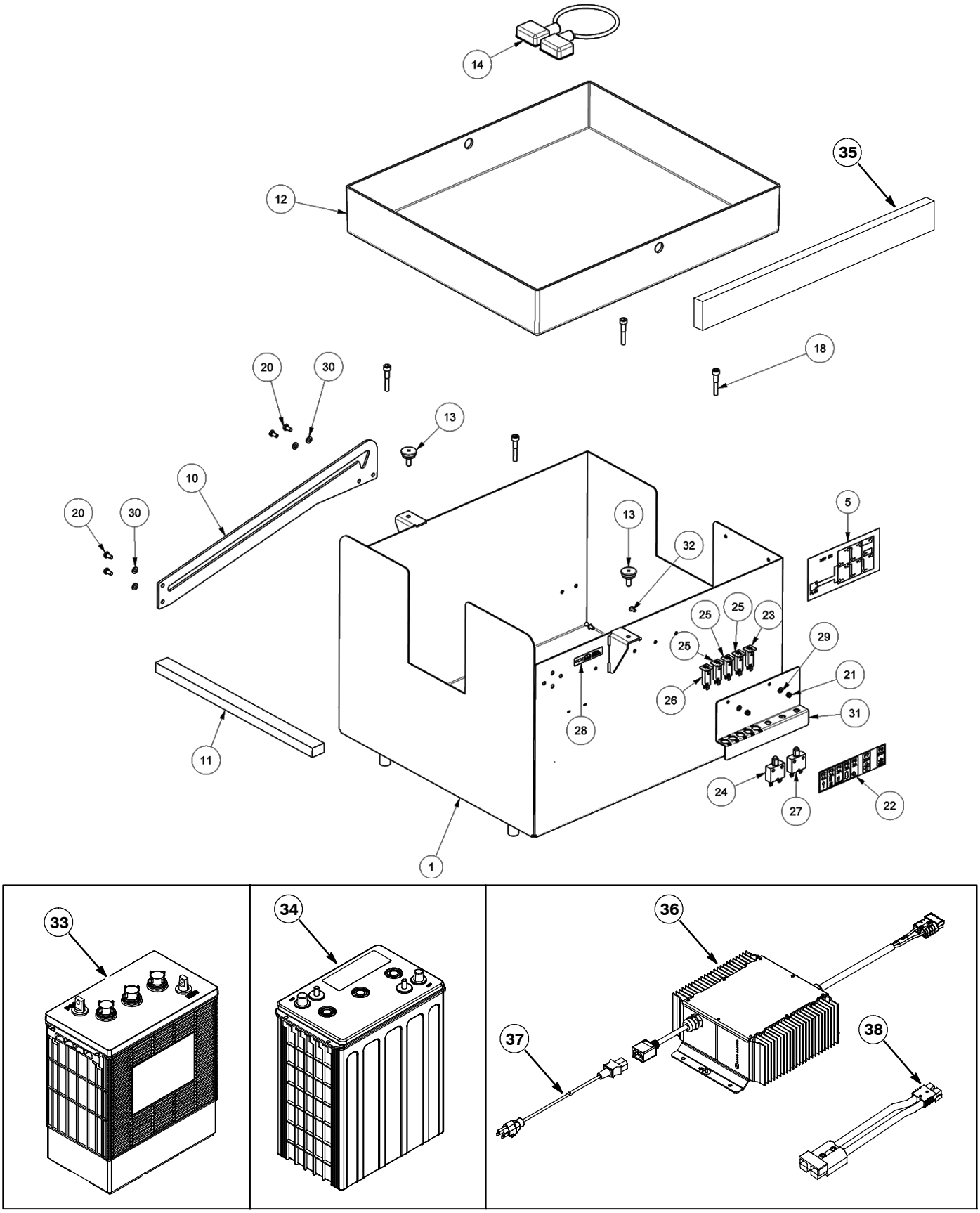

BATTERY COMPARTMENT GROUP (75CM Cylindrical Brush Model)

Ref.	Part No.	Mfr. Date	Description	Qty.
1	LAFN11769	( )	Support Battery Cpl P160 S/T	1
5	N/A	( )	Label (Order Label Kit KTRI06401)	1
10	LAFN05807	( )	Plate, Tank Rod	1
11	MPVR04744	( )	Gasket	1
12	MPVR04127	( )	Plate, Box, Battery	1
13	VTVR00038	( )	Knob	2
14	897357	( )	Battery, Bridge, M8, 70	5
18	VTVT00889	( )	Screw Tcei M. 8- 45	4
20	897130	( )	Screw, Te, M6x12, Uni5739, A2	4
21	VTDD01693	( )	Nut M 5 Inx	2
22	N/A	( )	Label (Order Label Kit KTRI06401)	1
23	METT00135	( )	Fuse 2a	1
24	METT00132	( )	Fuse 30a	1
25	METT00136	( )	Fuse 3a	3
26	METT00137	( )	Fuse 4a	1
27	METT00138	( )	Fuse 50a	1
28	N/A	( )	Label (Order Label Kit KTRI06401)	1
29	897166	( )	Washer, D. 5, Inox	2
30	897106	( )	Washer, Flat, 6,00x11,00x1,6, Ss	4
31	LAFN11743	( )	Bracket	1
32	VTVT00805	( )	Screw Tbei M. 5- 10	2
33	1070587	( )	Battery, Wet, 06vdc 0360ah, W/ Cart [Tr]	6
34	1262287	( )	Battery, Agm, 06vdc 350ah	6
35	222473	( )	Spacer, Battery, Foam, 0.75 X 3.0 X 21.0	2
36	1043662	( )	Charger, 36vdc 21a 85- 265vac 1ph 45/65hz	1
37	1017079	( )	Cord, Extn, 16ga /3, 10ft [Sjt]	1
38	223679	( )	Cable Assy, 06GA Red/Blk. 050A/175A	1

MANUAL BATTERY WATERING SYSTEM (OPTION)

355813

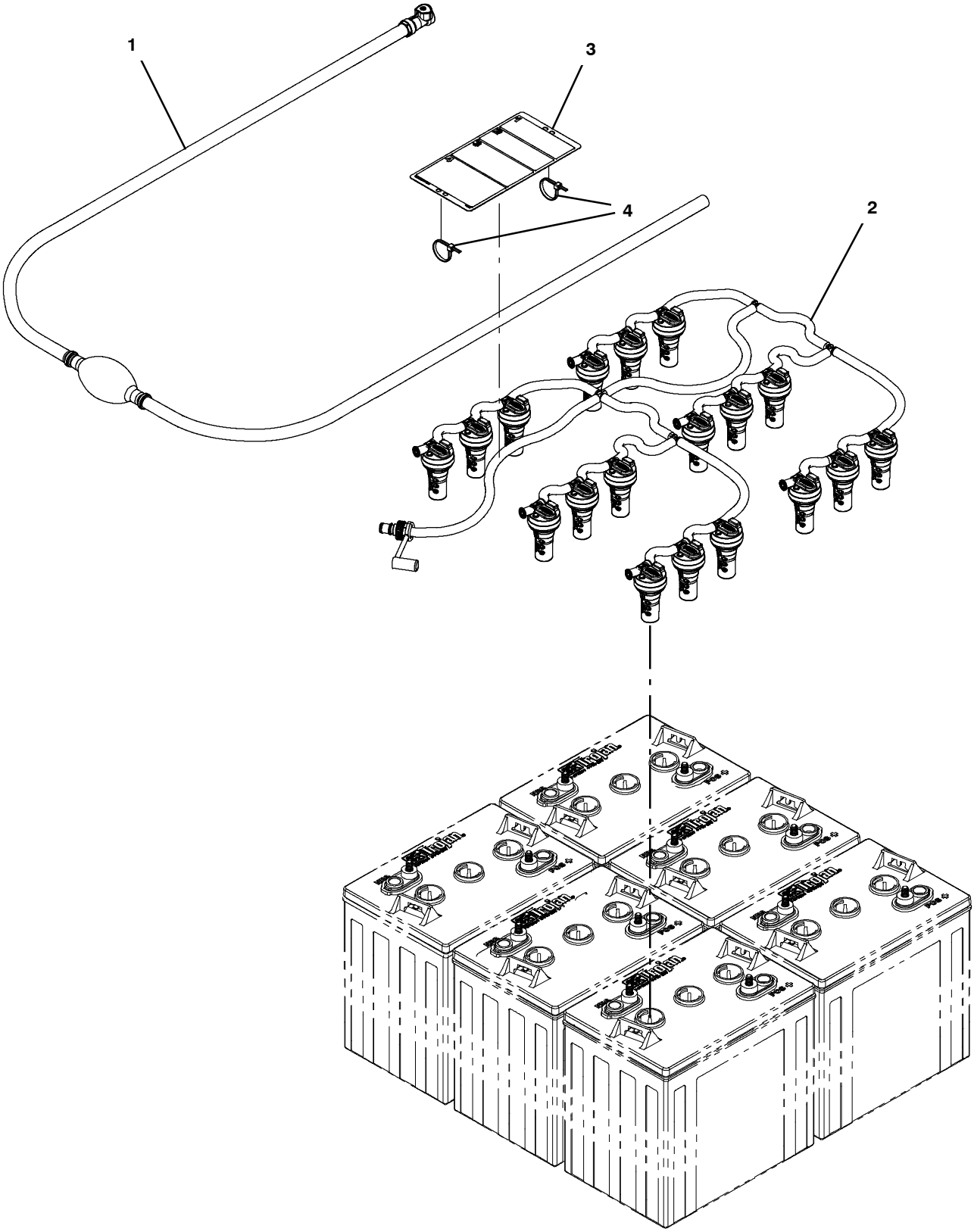

MANUAL BATTERY WATERING SYSTEM (OPTION)

	Ref.	Part No.	Mfr. Date	Description	Qty.
∇		9045074*	( )	Fill Kit, 6 Btry, Mnl, Ci [Trojan]	1
▲	1	1236295	( )	Pump, Hand, Battery	1
▲	2	1248178	( )	Manifold Assy, Water, 6 Btry [Trojan]	1
▲	3	1253250	( )	Label, Tag, Battery [Bwt Watering]	1
▲	4	130773	( )	Tie, Cable, Nyl, 11.0l, .14w, 3.0 Max. D	2

*THIS KIT IS INTENDED FOR USE WITH TROJAN® LEAD ACID BATTERIES ONLY.

∇ ASSEMBLY
▲ INCLUDED IN ASSEMBLY

ELECTRICAL DIAGRAM

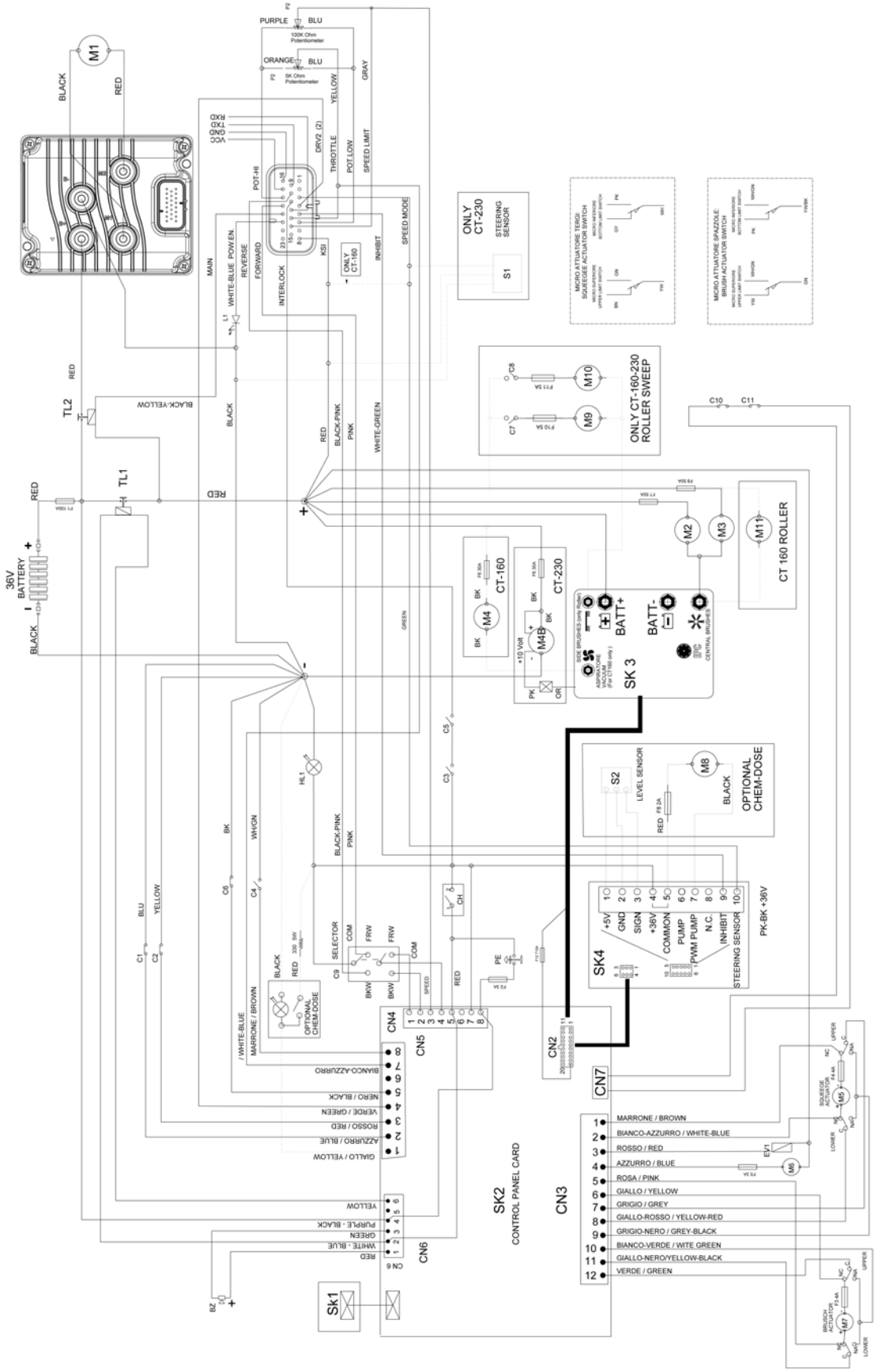

ELECTRICAL DIAGRAM

M1	TRACTION MOTOR
M2	BRUSCH MOTOR
M3	BRUSCH MOTOR
M4	VACUM MOTOR (CT160)
M4 B	VAC. MOTOR BRUSCHLESS (CT230)
M5	WIPER MOTOR
M6	WATER PUMP
M7	BRUSCH ACTUATOR
M8	CHEMICAL DOSE PUMP
M9	RIGHT SIDE BRUSCH MOTOR
M10	LEFT SIDE BRUSCH MOTOR
M11	ROLLER BRUSCH MOTOR
TL1	ELECTROMAGNETIC SWITCH
TL2	ELECTROMAGNETIC SWITCH
EV1	SOLENOID VALVE
C1	CLIXON TRACTION MOTOR
C2	MSW CLEAN WATER
C3	MSW SEAT
C4	DIRTY WATER SENSOR LEVEL
C5	MSW ADVANCEMENT PEDAL
C6	MSW PARKING BRAKE
C7	MSW RIGHT SIDE BRUSCH
C8	MSW LEFT SIDE BRUSCH
C9	DIRECTION SWITCH
C10	CLIXON BRUSCH MOTOR
C11	CLIXON BRUSCH MOTOR
P1	PEDAL POTENTIOMETER 5K
P2	SPEED LIMITER POTENTIOMETER
CH	KEY SWITCH
PE	EMERGENCY PUSCH BOTTON
BZ	BUZZER
F1	MAIN FUSE 100 A
F2	FUS. 3A KEY
F3	RES. FUSE 4A BRUSCH ACTUATOR
F4	RES. FUSE 4A WIPER ACTUATOR
F5	FUSE 3A WATER PUMP
F6	FUSE 30A VACUM
F7	FUSE 50A BRUSCH MOTOR
F8	FUSE 50A BRUSCH MOTOR
F9	FUSE 2A CHEM-DOSE PUMP
F10	RES. FUSE 5A SIDE BRUSCH MOTOR
F11	RES. FUSE 5A SIDE BRUSCH MOTOR
F12	DELAYED FUSE 10A DASCHBOARD
SK1	DASCHBOARD
SK2	MICRO CARD
SK3	OUTPUT CARD
SK4	CHEM-DOSE CARD
SK5	TRACTION CARD
BKW	REVERSE SWITCH
FRW	FORWARD SWITCH
R1	RESISTOR 220Ω 5W
R2	RESISTOR 220Ω 5W
HL1	FLASHING LIGHT
L1	CURTIS STATUS LED
S1	STEERING SPEED REDUCTION SENSOR
S2	CHEMICAL LEVEL SENSOR
K1	TRACTION SAFETY RELAY