S20
(Battery)

Sweeper Parts Manual

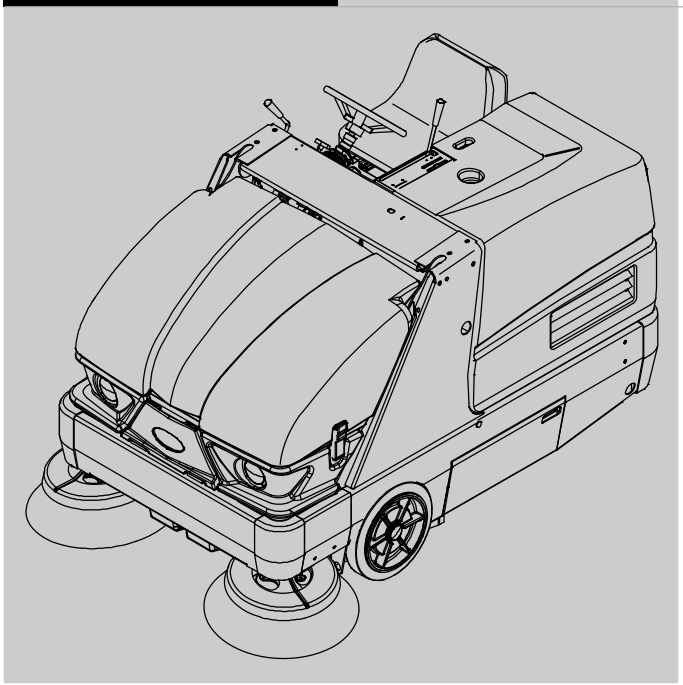

SweepMax ™ System
ShakeMax ™ 360
Tennant*True*® *Parts*
IRIS® a Tennant Technology

North America / International

For latest parts manual or other
Operator language manual, visit:

www.tennantco.com/manuals

9006708
Rev. 15 (1-2022)

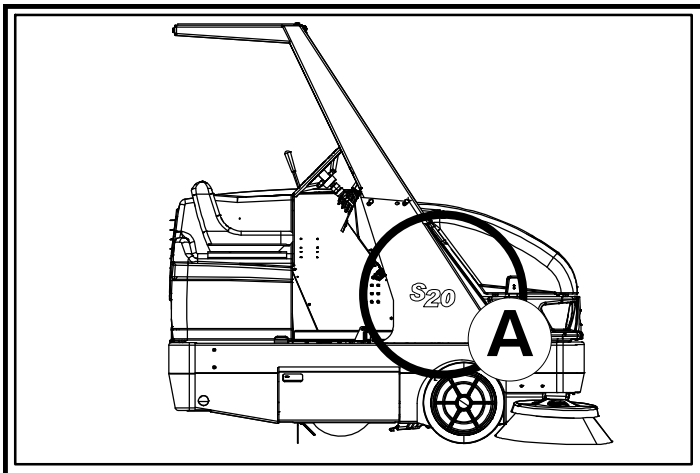

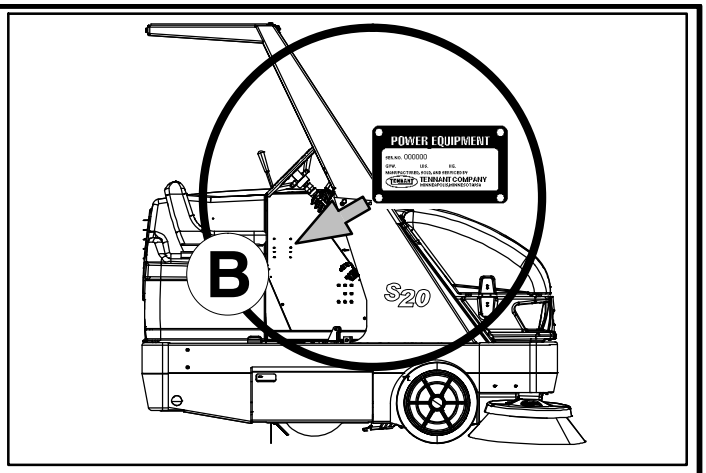

Ref	Part No.	Serial Number	Description	Qty.
1	82681	(000000–)	Bracket Wldt, Lpg Mount	1
▽ 2	63810	(000000–)	Latch Assy, Lpg Tank Mtg, W/Nut	4
▲ 3	51839	(000000–)	Nut Adjustable, Lpg Tank Mtg	2
4	49263	(000000–)	Tie, Cable	3
5	82556	(000000–001039)	Bracket, Vaporizer	1
6	54930	(000000–)	Vaporizer, LPG	1

D

C

EN

HOW TO ORDER PARTS – See diagram above

Only use TENNANT Company supplied or equivalent parts. Parts and supplies may be ordered online, by phone, by fax or by mail.

Follow the steps below to ensure prompt delivery.

1. **(A)** Identify the machine model.
2. **(B)** Identify the machine serial number from the data plate.
3. **(C)** Ensure the proper serial number is used from the parts list.
4. Identify the part number and quantity. Do not order by page or reference numbers.
5. Provide your name, company name, customer ID number, billing and shipping address, phone number and purchase order number.
6. Provide detail shipping instructions.

(D) ▽ – Identifies an assembly
▲ – Identifies parts included in assembly

Please fill out at time of installation for future reference.

Model No. – _____

Serial No. – _____

Machine Options – _____

Sales Rep. – _____

Sales Rep. phone no. – _____

Customer ID Number – _____

Installation Date – _____

Tennant Company
10400 Clean Street
Eden Prairie, MN 55344–2650
Phone: (800) 553–8033 or (763) 513–2850
www.tennantco.com

Thermo–Sentry, Perma–Filter, InstantAccess, Lower total Cost of Ownership, and Duramer are trademarks of Tennant Company.

Specifications and parts are subject to change without notice.

Original instructions, Copyright © 2009 – 2020, 2022 TENNANT Company, Printed in U.S.A.

CN

如何订购部件 – 参见下表

仅使用 TENNANT 公司提供的或同等部件。部件和供应可以在线订购，通过电话、传真或邮件订购。

请遵循下面的步骤确保及时交付。

1. (A) 确定机器型号。
2. (B) 从数据标签确定机器序列号。
3. (C) 确保使用部件列表中的正确序列号。
4. 确定部件号和数量。
   不要按页面或参考编号订购。
5. 提供您的姓名、公司名称、客户 ID 号、付帐和送货地址、电话号码和采购单编号。
6. 提供详细的送货说明。

(D) ▽ – 确定组件
▲ – 确定组件中包含的组件

请在安装时填写供未来参考。

型号 – _____

序列号 – _____

机器选项 – _____

销售代表- _____

销售代表电话号码 – _____

客户 ID 编号 – _____

安装日期 – _____

ES

CÓMO SOLICITAR PIEZAS – Consulte el diagrama anterior.

Utilice sólo las piezas suministradas por TENNANT Company o piezas equivalentes. Puede solicitar las piezas a través de internet, por teléfono, por fax o por correo.

Siga los siguientes pasos para que la entrega sea rápida.

1. **(A)** Indique el modelo de máquina.
2. **(B)** Indique el número de serie de la etiqueta de datos.
3. **(C)** Asegúrese de que indica el número de serie correcto de la lista de piezas.
4. Indique la cantidad y el número de la pieza.
   No realice el pedidoindicando el número de página o el de referencia.
5. Incluya su nombre, el nombre de la empresa, el ID de cliente, las direcciones de envío y facturación, el número de teléfono y el número del pedido de compra.
6. Facilite instrucciones de envío.

(D) ▽ – identifica un conjunto
▲ – identifica piezas de un conjunto

Rellene estos datos cuando realice la instalación para utilizarlos como referencia en el futuro.

Nº modelo – _____

Nº serie – _____

Opciones de la máquina – _____

Vendedor – _____

Nº teléfono vendedor – _____

Nº cliente – _____

Fecha de instalación – _____

FR

COMMENT COMMANDER DES PIÈCES DÉTACHÉES – Voir le schéma ci-dessus.

Utilisez uniquement des pièces fournies par la société TENNANT ou équivalentes. Les pièces et fournitures peuvent être commandées en ligne, par téléphone, fax, ou par courrier.

Suivez les étapes ci-dessous pour assurer une livraison rapide.

1. **(A)** Identifiez le modèle de la machine.
2. **(B)** Identifiez le numéro de série de la machine, à partir de l'étiquette signalétique.
3. **(C)** Assurez-vous que le numéro de série correct est utilisé à partir de la liste de pièces détachées.
4. Identifiez le numéro de pièce et la quantité. Ne commandez pas par page ou numéros de référence.
5. Fournissez votre nom, le nom de votre société, votre numéro d'identification de client, l'adresse de facturation et d'expédition, le numéro de téléphone et le numéro du bon de commande.
6. Fournissez des instructions d'expédition détaillées.

(D) ▽ – identifie un assemblage
▲ – identifie les pièces composant l'assemblage

A remplir au moment de l'installation à titre de référence.

Nº du modèle – _____

Nº de série – _____

Options de la machine – _____

Agent commercial – _____

Nº tél. de l'agent commercial – _____

Numéro d'identification client – _____

Date d'installation – _____

JP

パーツの発注方法 ?上記の図を参照してください

TENNANT社製のパーツまたは同等品のみをお使いください。
パーツやサプライ品のご注文は、オンライン、電話、FAX、または手紙でお願いいたします。
確実にお届けできるように、以下の情報お知らせください。

1. (A) 製品のモデル名をお知らせください。
2. (B) 製品のデータラベルに印刷されているシリアル番号をお知らせください。
3. (C) パーツリストを参照して、シリアル番号が正しいかご確認ください。
4. パーツ番号と数量をお知らせください。マニュアル/カタログのページ番号や参照番号でのご注文はご遠慮ください。
5. お客様のお名前、会社名、顧客ID番号、請求/発送先住所、電話番号、注文書番号をお知らせください。
6. 発送に関するご希望があれば、明記してください。

(D) ▽ – アセンブリを示します
▲ – アセンブリに含まれるパーツを示します

後日確認できるように、設置時に記入してください。

モデルNo. – _____

シリアルNo. – _____

製品のオプション– _____

販売代理店 – _____

販売代理店の電話番号 – _____

顧客ID番号 – _____

設置日 – _____

E, NA, JP

General Recommended Maintenance Items

	Ref.	Part No.	Serial Number	Description	Qty.
▽		9006388	(000000–)	Maint Kit, 400hr [S20 Ele]	1
▲		360686	(000000–)	Belt, V, 33.5l [3v]	1
▲		03670	(000000–)	Belt, V, 54.0l [3vl]	1
▲		1059569	(001249–)	Belt, V, 31.5l [3v]	1
		360320	(000000–001248)	Belt, V, 31.5l [3v]	1
▽		9006392	(000000–)	Maint Kit, 800Hr [S20 Ele]	1
▲		360686	(000000–)	Belt, V, 33.5l [3v]	1
▲		03670	(000000–)	Belt, V, 54.0l [3vl]	1
▲		1059569	(001249–)	Belt, V, 31.5l [3v]	1
▲		65221	(000000–)	Element, Fltr, Hyd Oil	1
▲		9006534	(000000–)	Cap, Breather, Hyd	1
▲		361023	(000000–)	Strainer, Hyd, 010gpm 100mesh	1
▲		1057707	(000000–)	Oil, Hyd [El, Iso 32, 01Gal]	4
▲		1045900	(000000–)	Filter, Cyl, 11.09d, 13.31l, 6.724 Id	1
▲		1044356	(000000–)	Gasket, Cover	1
▲		360134	(000000–)	Seal	1
▲		360136	(000000–)	Flap, Recirculation	1
▲		360761	(000000–)	Seal	1
▲		360784	(000000–)	Seal	1
▲		1047575	(000000–)	Skirt, Neo, .12 2ply, Dust–Cntrl	1
▲		360603	(000000–)	Seal, Rbr, .13 6.34w 36.3l, 12/.28h, Red	1
▲		87689	(000000–)	Cord, Sponge, Neo, 1.0d 36.3l	1
▲		360844	(000000–)	Seal, Door, Dump, Side	2
▲		360627	(000000–)	Bracket, Mtg, Angle, Air Fltr	1
▲		360336	(000000–)	Seal	1
▲		87181	(000000–)	Seal, Hppr, .06 12.5w 36.6l Neo	1
▲		1057602	(000000–)	Skirt, Neo, .12, 12.26w 14.50l, 07/ Sl	2
▲		1047637	(000000–)	Hose, Flex, Vacuum, 04.0d, 21.0l	1
▲		1044357	(000000–)	Seal, Inlet, Vacuum	1
		16411	(000000–)	Paint, Airdry, Off–White, 12oz	1
		16412	(000000–)	Paint, Airdry, Teal, 12oz, Solid	1
		377540	(000000–)	Paint, Airdry, Blk, 12oz	1
		377538	(000000–)	Paint, Airdry, Gray, 12oz [Enamel]	1
		377537	(000000–)	Paint, Airdry, Iron Gray,12oz[Pwdr Coat]	1

SECTION 2

Contents **Page**

Fig. 1 – Brushes, Replacement 2–2
Fig. 2 – Main Frame and Skirts Group 2–4
Fig. 3 – Brush Door Group, Right Side 2–6
Fig. 4 – Brush Door Group, Left Side 2–8
Fig. 5 – Seat and Cover Group (000000–003440) 2–10
Fig. 6 – Seat and Cover Group (003441–) 2–12
Fig. 7 – Rear Cover Latch Group (000000–002464) 2–14
Fig. 8 – Rear Cover Latch Group (002465–) 2–16
Fig. 9 – Operator Station Group 2–18
Fig. 10 – Steering Wheel Group 2–20
Fig. 11 – Directional Pedal Group 2–22
Fig. 12 – Wheel and Brake Group, Front 2–24
Fig. 13 – Steering Cylinder Group (000000–005799) 2–26
Fig. 14 – Wheel Group, Rear Drive (000000–005799) 2–28
Fig. 15 – Wheel Group, Rear Drive (005800–) 2–30
Fig. 16 – Brush Lift Group, Main 2–32
Fig. 17 – Brush Cable Lift Group, Main 2–34
Fig. 18 – Brush Drive Group, Main 2–36
Fig. 19 – Brush Drive Motor Group, Main 2–38
Fig. 20 – Brush Lift Group, Side 2–40
Fig. 21 – Brush Motor and Pivot Group, Side . . 2–42
Fig. 22 – Vacuum Fan Control Group 2–44
Fig. 23 – Vacuum Fan Group 2–46
Fig. 24 – Hopper Lift Arms Group 2–48
Fig. 25 – Hopper Group, Plastic 2–50
Fig. 26 – Hopper Cover Group 2–52
Fig. 27 – Hopper Support Group (001071–)2–54
Fig. 28 – Hopper Dump Door Group 2–56
Fig. 29 – Hopper Filter Shaker Tray Group 2–58
Fig. 30 – Hopper Filter Shaker Cover Group . . 2–60
Fig. 31 – Hydraulic Schematic 2–62
Fig. 32 – Hydraulic Hose Group 2–64
Fig. 33 – Hydraulic Reservoir Group 2–66
Fig. 34 – Hydraulic Control Valve Group 2–68
Fig. 35 – Hydraulic Solenoid Valve Group 2–69
Fig. 36 – Electrical Control Box Group 2–70
Fig. 37 – Electrical Control Box Wire Connection Group 2–72
Fig. 38 – Electrical Schematic 2–74
Fig. 39 – Electrical Wire Harnesses Group 2–79
Fig. 40 – Label Group 2–83

Fig. 1 – Brushes, Replacement

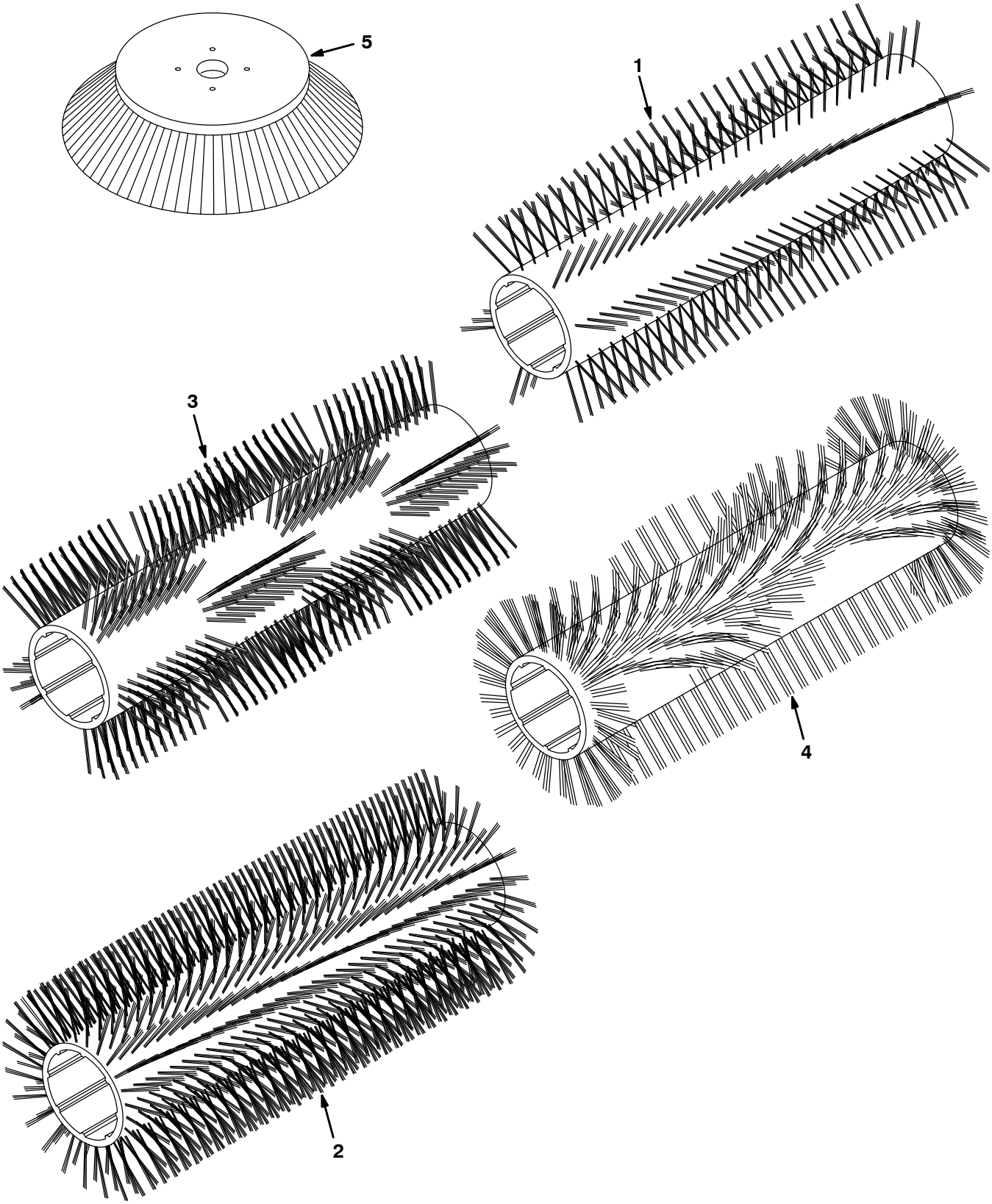

355043 – NA

Fig. 1 – Brushes, Replacement

Ref.	Part No.	Serial Number	Description	Qty.
1	87334	(000000–)	Brush–Sweep, Polyester 8 Dr, Spiral	1
1	87099	(000000–)	Brush–Sweep, Polypropylene, Spiral	1
1	1254686	(000000–)	Brush–Sweep, Polypropylene and Wire, Spiral [Bronze]	1
1	385947	(000000–)	Brush–Sweep, Natural Fiber, Spiral	1
2	87333	(000000–)	Brush–Sweep, Polyester 24 Dr, Spiral	1
3	370010	(000000–)	Brush–Sweep, Window, Polypropylene, Spiral	1
4	370025	(000000–)	Brush–Sweep, Wedge, Polypropylene, Spiral	1
5	08013N	(000000–)	Brush–Side Swp, Soft Nylon	1
5	59431	(000000–)	Brush–Side Swp, Polypropylene	1
5	59432	(000000–)	Brush–Side Swp, Flatwire	1

Fig. 2 – Main Frame and Skirts Group

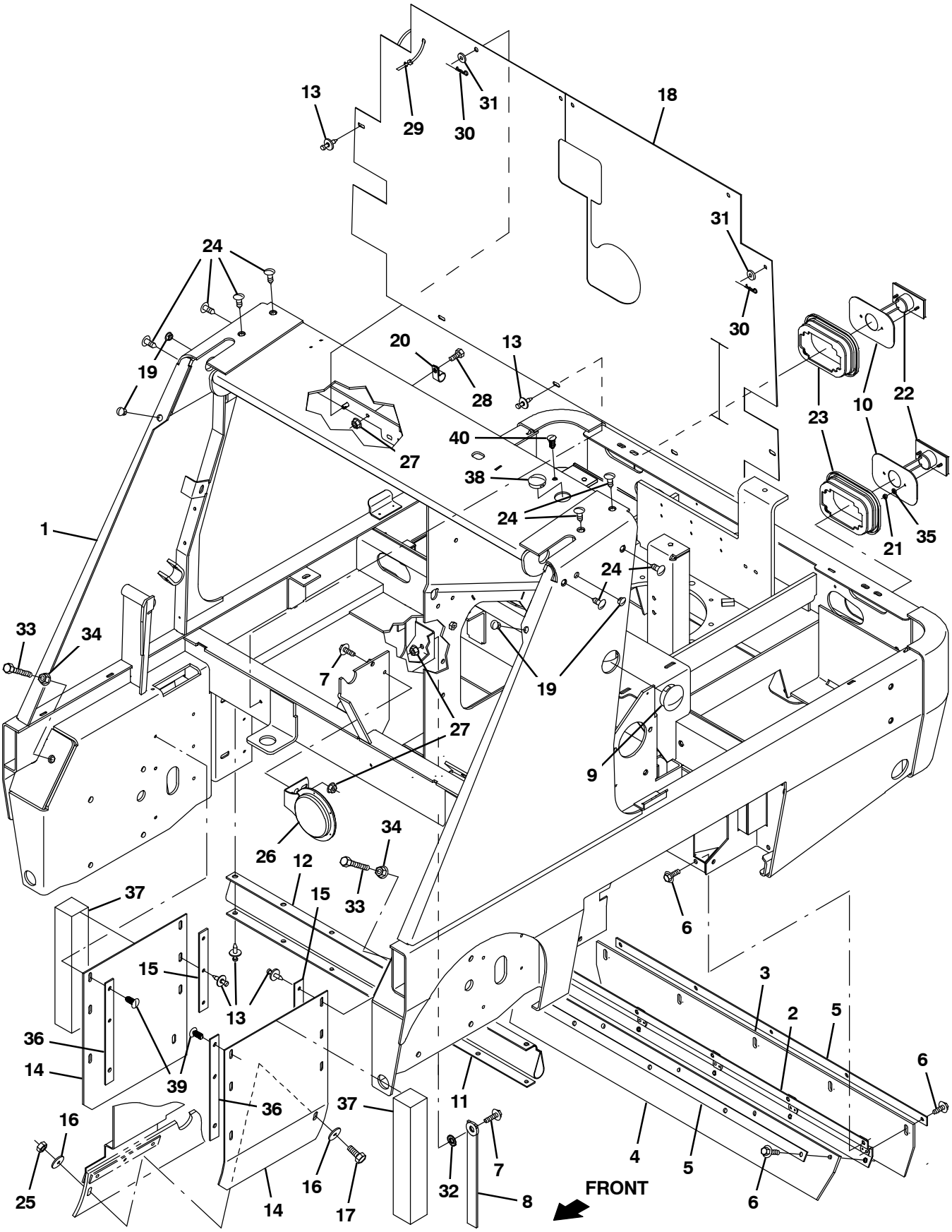

356001- E, NA

Fig. 2 - Main Frame and Skirts Group

Ref.	Part No.	Serial Number	Description	Qty.
1	1042849	(000000- 005799)	Frame Wldt, Ele [S20]	1
1	1073607	(005800-)	Frame Wldt, Main [S20 Ele]	1
2	360138	(000000-)	Channel, Recirculation Flap	1
3	360134	(000000-)	Seal	1
4	360136	(000000-)	Flap, Recirculation	1
5	360137	(000000-)	Strip, Retainer, Flap	2
6	1037346	(000000-)	Screw, Hex, M8 X 1.25 X 25, 9.8, Sems	15
7	1037354	(000000-)	Screw, Hex, M8 X 1.25 X 30, 9.8, Sems	2
8	71579	(000000-)	Strap, Static, W/Grommet, .19 1.1w 25.0l	1
9	1012529	(000000-)	Plug, Hole, Rnd, 2.13h 0.6l, Blk Nyl	1
10	1054566	(000000-)	Plate, Grommet, Taillight, Ele	2
11	87180	(000000-)	Retainer, Seal, Hppr, Top	1
12	87181	(000000-)	Seal, Hppr, .06 12.5w 36.6l Neo	1
13	72968	(000000-)	Rivet, Plstc, .250d X 0.90	25
14	1057602	(000000-)	Skirt, Neo, .12, 12.26w 14.50l, 07/ Sl	2
15	360781	(000000-)	Retainer, Skirt, .12, 1.0w X 08.1l, Pl	2
16	30013	(000000-)	Washer, Flat, 0.31, Fendr	2
17	09740	(000000-)	Screw, Hex, M8 X 1.25 X 20, Ss	1
18	1051250	(000000-)	Seal, Firewall	1
19	02431	(000000-)	Plug, Hole, Rnd, 0.56h .03- .12, Blk Nyl	4
20	67767	(000000-)	Clamp, Cable, Stl, 0.69d X 0.62w, 1hole	2
21	01689	(000000-)	Nut, Hex, Std, #10- 32, Ss	4
22	1075205	(000000-)	Taillight, 12vdc, Led, 3.6 X 1.9	2
23	1054619	(000000-)	Grommet, Taillight, 5.44 X 3.56	2
24	1055605	(000000-)	Plug, Hole, Rnd, 0.38h .4- .7, Blk Nyl	8
25	08709	(000000-)	Nut, Hex, Lock, M8 X 1.25, Nl	1
26	369702	(000000-)	Horn, 36vdc, 115 Dba	1
27	07791	(000000-)	Nut, Hex, Flng, M8 X 1.25	3
28	39277	(000000-)	Screw, Hex, M8 X 1.25 X 25, 8.8	1
29	44961	(000000-)	Tie, Cable, Nyl, 14.5l .30w 4.0 Max D	1
30	86866	(000000-)	Pin, Cotter, Hair, 0.38d .072 Wir	4
31	32491	(000000-)	Washer, Flat, 0.31, Std	4
32	41141	(000000-)	Washer, Lock, Int- Ext, 0.31	1
33	06969	(000000-)	Screw, Hex, M12 X 1.75 X 40, 8.8	2
34	07793	(000000-)	Nut, Hex, Flng, M12 X 1.75	2
35	32980	(000000-)	Washer, Lock, Int, 10	4
36	1057684	(000000-)	Retainer, Skirt, .12, 1.0w X 10.4l, Pl	2
37	1042791	(000000-)	Insulation, Acstc, 2.0, 02.0 X 12.0	2
38	1061216	(001292-)	Plug, Hole, Rnd, 1.37h 0.45l, Blk Nyl	1
39	21168	(000000-)	Plug, Hole, Rnd, 0.25h 0.8l, Brb, Nyl	2
40	1055605	(007663-)	Plug, Hole, Rnd, 0.38h .4- .7, Blk Nyl	1

Fig. 3 – Brush Door Group, Right Side

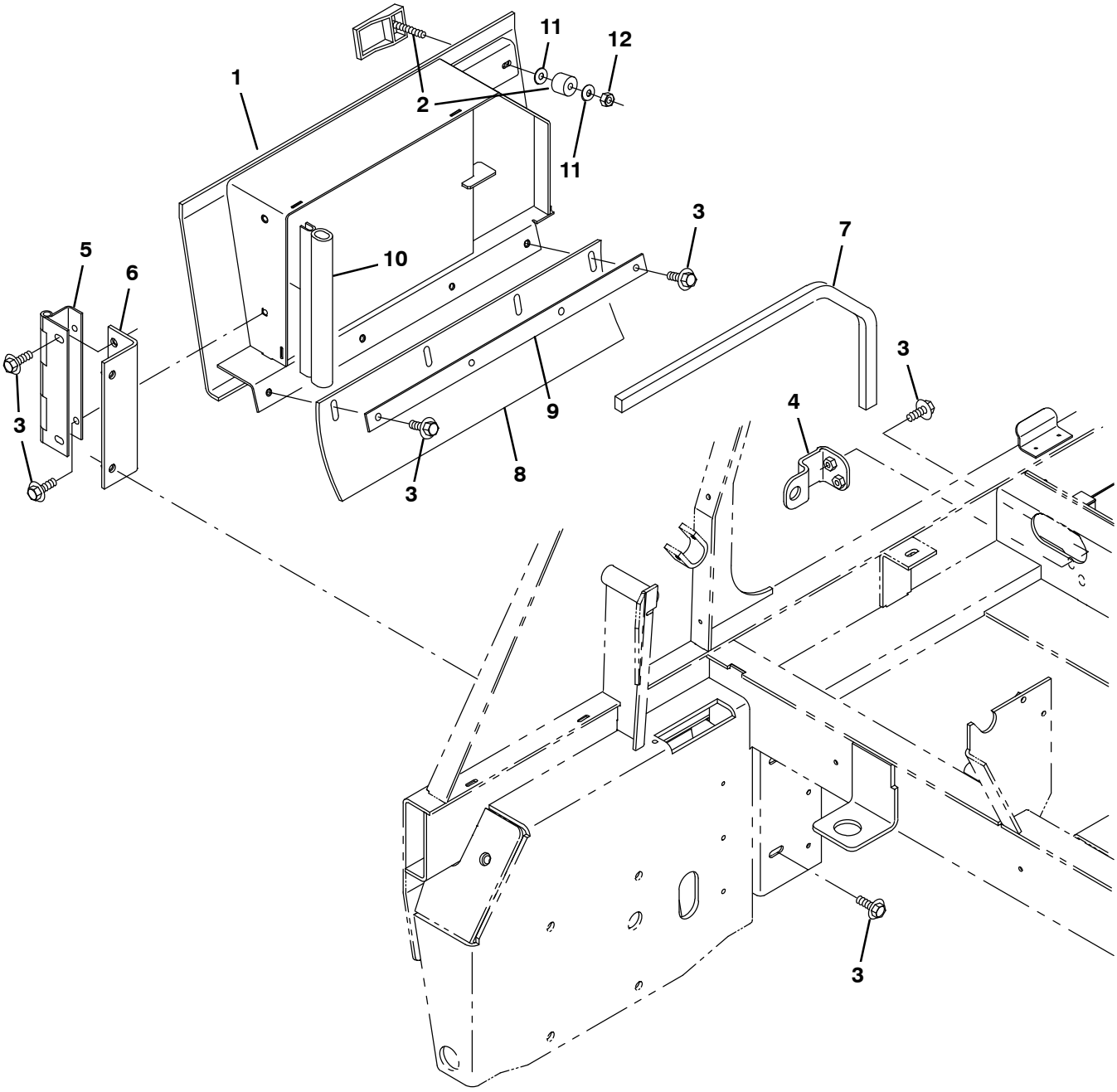

354937 – ALL

Fig. 3 – Brush Door Group, Right Side

Ref.	Part No.	Serial Number	Description	Qty.
1	1044844	(000000–)	Door Wldt, Brush, Rh	1
2	360388	(000000–)	Latch, Swell	1
3	1020341	(000000–)	Screw, Hex, M8 X 1.25 X 20, Ss, Sems	12
4	1048746	(000000–)	Bracket, Stop, Brush Door	1
5	360283	(000000–)	Hinge, .38pin .12 3.5w 07.8l, 4/0.38h	1
6	1048750	(000000–)	Bracket, Hinge, Door	1
7	360319	(000000–)	Seal, Rbr, Open, 0.38, 1.25w 25.5l	1
8	360784	(000000–)	Seal	1
9	361306	(000000–)	Retainer, Skirt, .12, 1.0w X 19.3l, Pl	1
10	363502	(000000–)	Seal, Bulb, Str, 0.50d .13grip 009.4l	4
11	39349	(000000–)	Washer, Flat, 0.31, Sae	2
12	32960	(000000–)	Nut, Hex, Lock, .31–24, Nl	1

Fig. 4 – Brush Door Group, Left Side

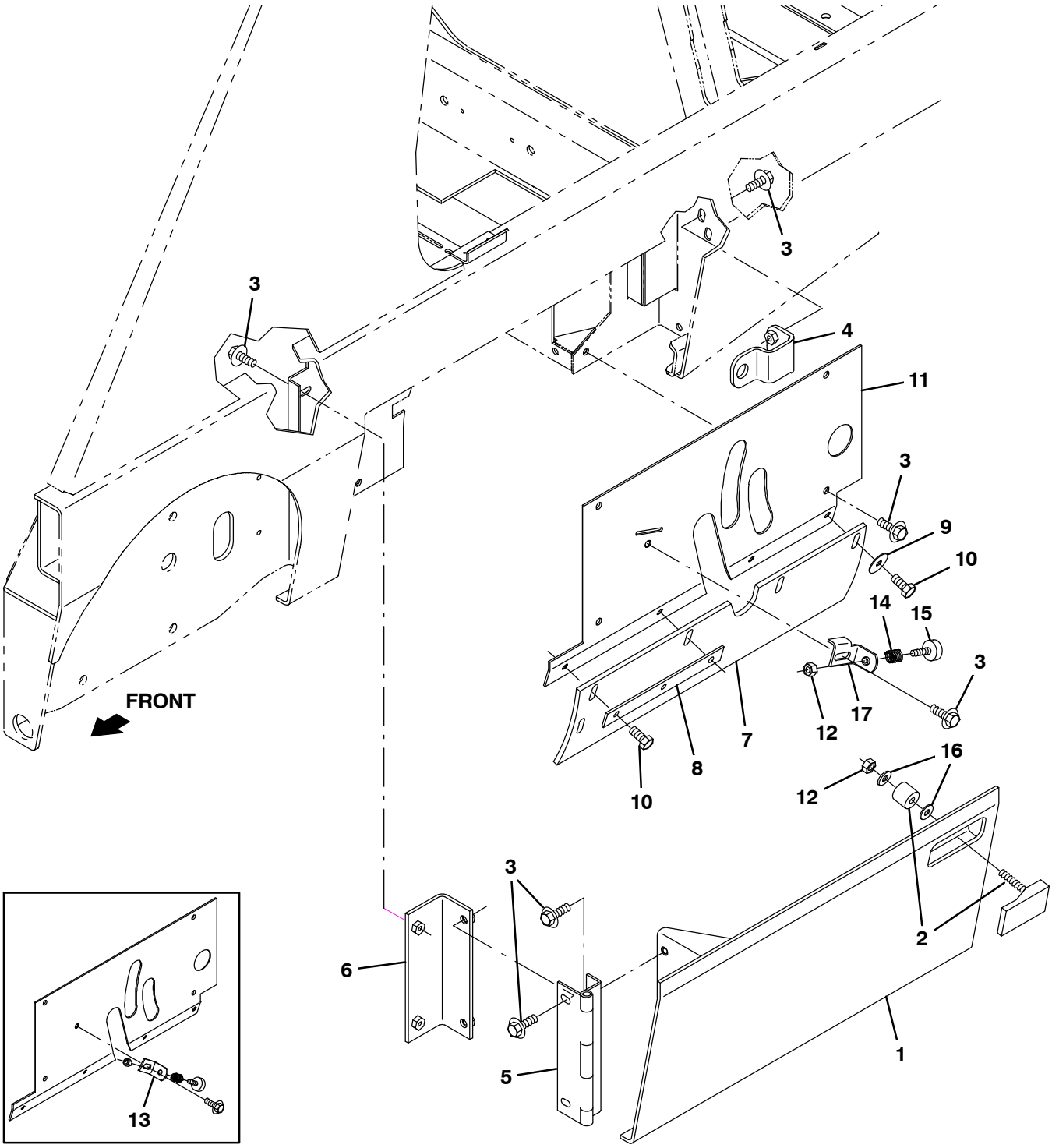

356002– E, NA

Fig. 4 – Brush Door Group, Left Side

Ref.	Part No.	Serial Number	Description	Qty.
1	1044845	(000000–)	Door Wldt, Brush, Lh	1
2	360388	(000000–)	Latch, Swell	1
3	1037346	(000000–)	Screw, Hex, M8 X 1.25 X 25, 9.8, Sems	13
4	1048746	(000000–)	Bracket, Stop, Brush Door	1
5	360283	(000000–)	Hinge, .38pin .12 3.5w 07.8l, 4/0.38h	1
6	1048750	(000000–)	Bracket, Hinge, Door	1
7	360761	(000000–)	Seal	1
8	360781	(000000–)	Retainer, Skirt, .12, 1.0w X 08.1l, Pl	1
9	30013	(000000–)	Washer, Flat, 0.31, Fendr	1
10	49826	(000000–)	Screw, Hex, M8 X 1.25 X 16, Nl, Ss	4
11	1075598	(000000–)	Plate, Seal	1
12	41169	(000000–)	Nut, Hex, Lock, .25–20, Nl, Ss	1
13	1049208	(000000–001531)	Bracket Wldt, Stop, Brush	1
14	86444	(000000–)	Spring, Cmpr, 0.60od .07wir 00.8l	1
15	20802	(000000–)	Bumper, Rbr, 1.0d 0.38th .25–20	1
16	39349	(000000–)	Washer, Flat, 0.31, Sae	2
17	1076302	(001532–)	Bracket Wldt, Stop, Brush	1

Fig. 5 – Seat and Cover Group (000000–003440)

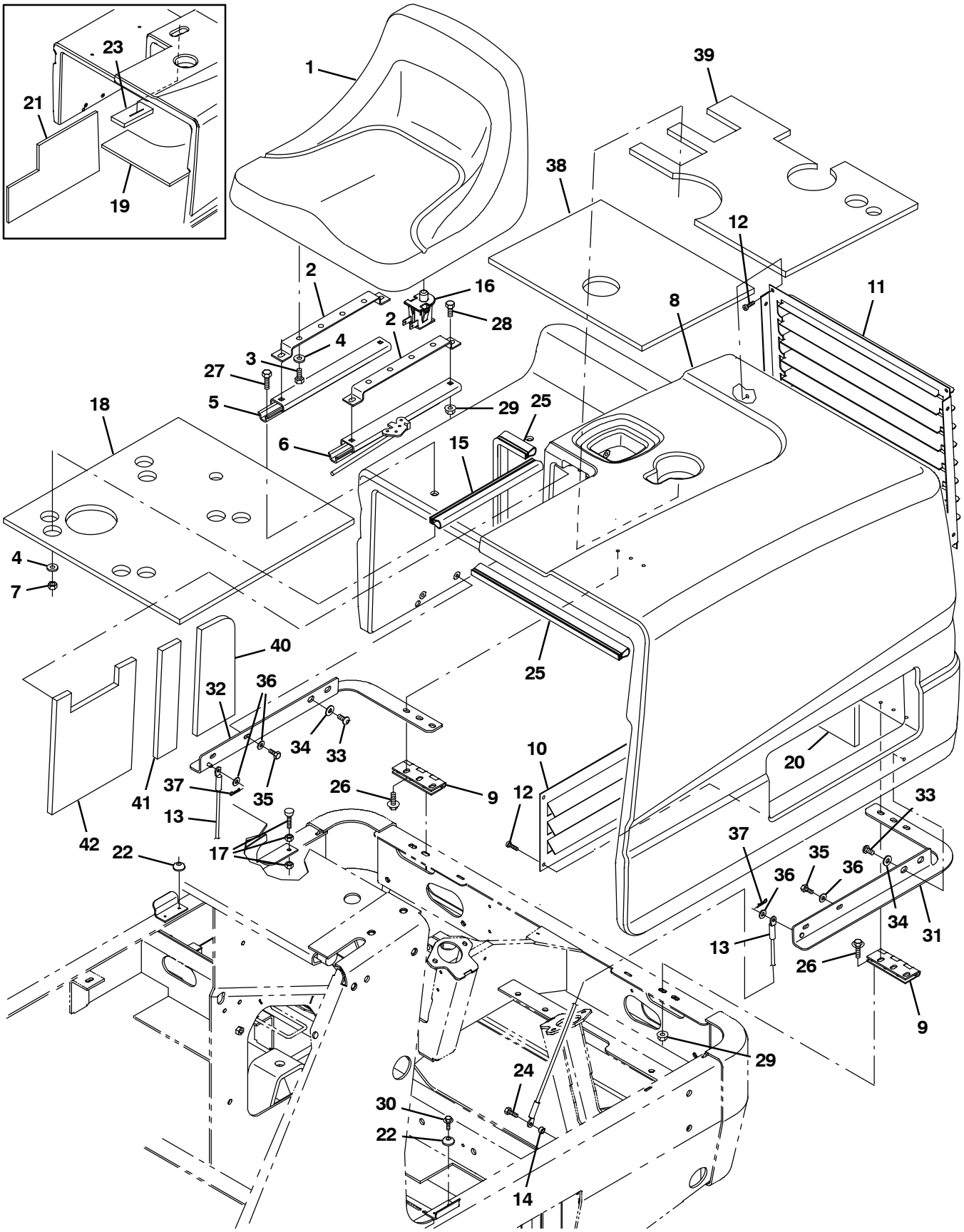

354925 – NA

Fig. 5 – Seat and Cover Group (000000–003440)

Ref.	Part No.	Serial Number	Description	Qty.
1	9010740	(000000–003440)	Seat Kit, Replacement [S20]	1
2	1045229	(000000–003440)	Bracket, Adj, Seat	2
3	54395	(000000–003440)	Screw, Hex, .31–18 X 0.62, G5	4
4	32490	(000000–003440)	Washer, Flat, 0.25, Std	8
5	1047447	(000000–003440)	Track, Slide, Seat Adj, 12.5l	1
6	1048198	(000000–003440)	Track, Slide, Seat Adj, 12.5l, W/ Latch	1
7	08709	(000000–003440)	Nut, Hex, Lock, M8 X 1.25, Nl	4
8	1060541	(000000–002464)	Shroud, Rear, Trimmed	1
8	1064956	(002465–003440)	Shroud, Rear [S20]	1
9	360704	(000000–003440)	Hinge, .25pin .12 3.0w 04.5l, 6/0.38sl	2
10	1049988	(000000–003440)	Panel, Louver	1
11	1049987	(000000–003440)	Panel, Louver	1
12	360973	(000000–003440)	Screw, Pan, 12–16 X 0.50, F/ Plstc	8
13	1056045	(000000–003440)	Cable, Glv .13d 024.2l .25eye /.25eye	2
14	222516	(000000–003440)	Sleeve, P/M, 0.32b 0.50d 0.3l [430ss]	2
15	1050785	(000000–003440)	Seal, Afmkt, Bulb, 90, 1.33 01ft	1
16	1048955	(000000–003440)	Switch, Seat, No [Delta 6440–04]	1
17	75128	(000000–003440)	Spindle, Adjustment	1
18	361345	(000000–003440)	Insulation, Acstc, 0.5, 21.4 X 20.6 C–O	1
19	361342	(000000–002464)	Insulation, Acstc, 0.5, 32.0 X 21.6 Ntch	1
20	361344	(000000–003440)	Insulation, Acstc, 0.5, 31.6 X 14.1 Ntch	1
21	361343	(000000–002464)	Insulation, Acstc, 0.5, 21.5 X 12.2 Ntch	1
22	361554	(000000–003440)	Bumper, Rbr, 0.90d 0.38th 0.18h	2
23	361951	(000000–002464)	Insulation, Acstc, 0.8, 06.6 X 03.0 Slit	1
24	11329	(000000–003440)	Screw, Hex, M6 X 1.00 X 16, Nl, Ss	2
25	10576	(000000–003440)	Seal, Bulb, 90, 0.50d .06–.09grip 022.5l	1
26	1037346	(000000–003440)	Screw, Hex, M8 X 1.25 X 25, 9.8, Sems	8
27	06955	(000000–003440)	Screw, Hex, M8 X 1.25 X 35, 8.8	4
28	16735	(000000–003440)	Screw, Hex, M8 X 1.25 X 16, 8.8	4
29	07791	(000000–003440)	Nut, Hex, Flng, M8 X 1.25	8
30	223198	(000000–003440)	Screw, Hex, M5 X 0.80 X 10, Fmg	2
31	1058717	(001518–003440)	Plate Wldt, Lh	1
32	1058722	(001518–003440)	Plate Wldt, Rh	1
33	17284	(001518–003440)	Screw, Btn, M8 X 1.25 X 16, Ss	4
34	32491	(001518–003440)	Washer, Flat, 0.31, Std	4
35	11329	(001518–003440)	Screw, Hex, M6 X 1.00 X 16, Nl, Ss	6
36	32490	(001518–003440)	Washer, Flat, 0.25, Std	2
37	08085	(001518–003440)	Pin, Cotter, Hair, 0.31d .058 Wir	2
38	1068101	(002465–003440)	Insulation, Acstc, 0.5, 13.0 X 17.8 Ntch	1
39	1068102	(002465–003440)	Insulation, Acstc, 0.5, 15.4 X 20.5 Ntch	1
40	1068103	(002465–003440)	Insulation, Acstc, 0.5, 4.5 X 11.0 Ntch	1
41	1068104	(002465–003440)	Insulation, Acstc, 0.5, 2.3 X 11.1 Ntch	1
42	1068105	(002465–003440)	Insulation, Acstc, 0.5, 9.2 X 11.8 Ntch	1

Fig. 6 – Seat and Cover Group (003441–)

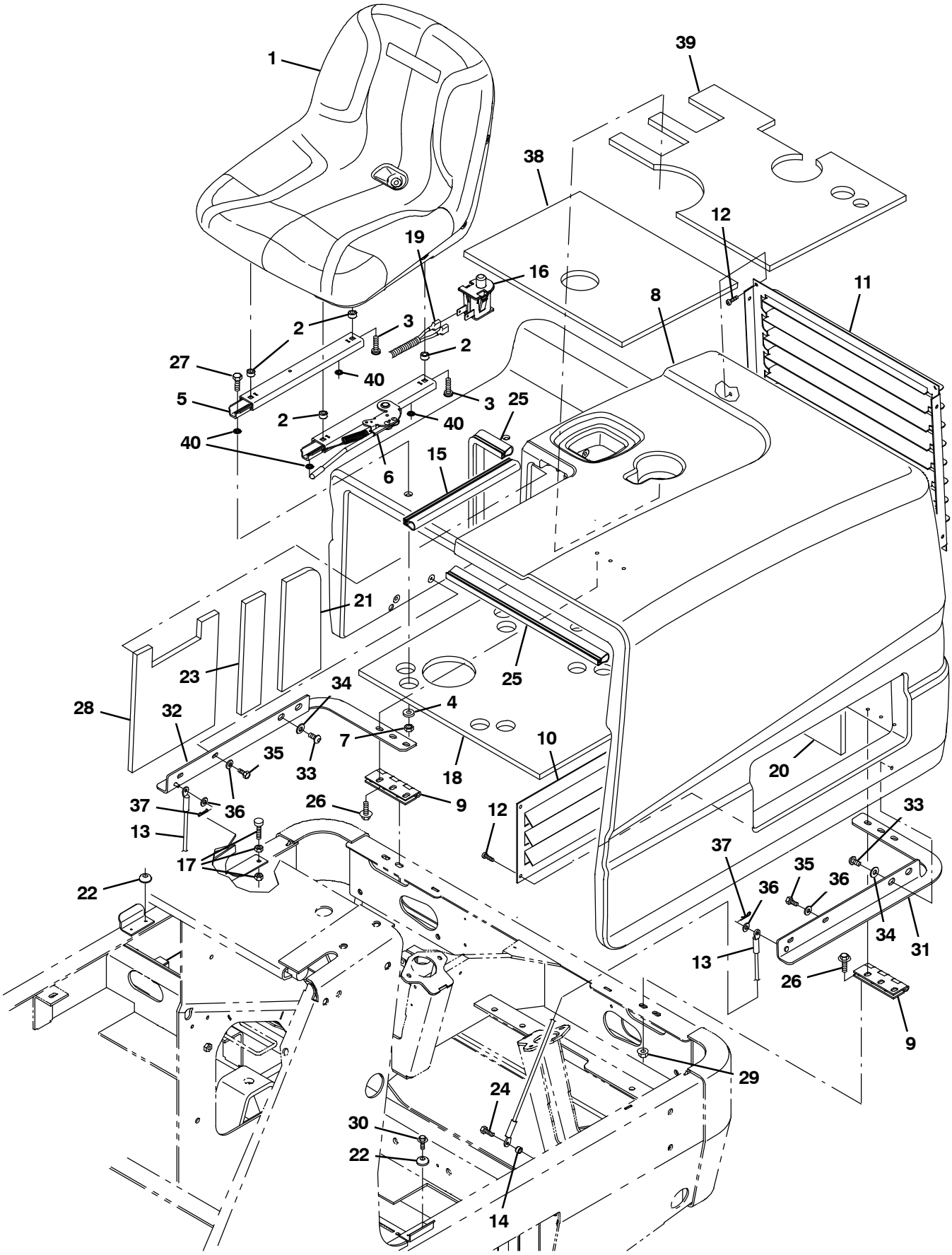

354925 – NA

Fig. 5 – Seat and Cover Group (003441–)

Ref.	Part No.	Serial Number	Description	Qty.
1	1201894	(003441–)	Seat, Std [Milsco]	1
2	360460	(003441–)	Sleeve, P/M, 0.34b 0.63d 0.4l, Ss / Oil	4
3	1073048	(003441–)	Screw, Pan, Phl, .31–18 X 1.50, G2	4
4	32491	(003441–)	Washer, Flat, 0.31, Std	4
5	1077067	(003441–)	Track, N–Lkg, Seat, 12.5l, No Stud	1
6	1077071	(003441–)	Track, Locking, 12.5l, No Stud W/Handle	1
7	08709	(003441–)	Nut, Hex, Lock, M8 X 1.25, Nl	4
8	1064956	(003441–)	Shroud, Rear [S20]	1
9	360704	(003441–)	Hinge, .25pin .12 3.0w 04.5l, 6/0.38sl	2
10	1049988	(003441–)	Panel, Louver	1
11	1049987	(003441–)	Panel, Louver	1
12	360973	(003441–)	Screw, Pan, 12–16 X 0.50, F/ Plstc	8
13	1056045	(003441–)	Cable, Glv .13d 024.2l .25eye /.25eye	2
14	222516	(003441–)	Sleeve, P/M, 0.32b 0.50d 0.3l [430ss]	2
15	1050785	(003441–)	Seal, Afmkt, Bulb, 90, 1.33 01ft	1
16	1048955	(003441–)	Switch, Seat, No [Delta 6440–04]	1
17	75128	(003441–)	Spindle, Adjustment	1
18	361345	(003441–)	Insulation, Acstc, 0.5, 21.4 X 20.6 C–O	1
19	1072210	(003441–)	Harness, Wire, Seat [S20]	1
20	361344	(003441–)	Insulation, Acstc, 0.5, 31.6 X 14.1 Ntch	1
21	1068103	(003441–)	Insulation, Acstc, 0.5, 4.5 X 11.0 Ntch	1
23	1068104	(003441–)	Insulation, Acstc, 0.5, 2.3 X 11.1 Ntch	1
22	361554	(003441–)	Bumper, Rbr, 0.90d 0.38th 0.18h	2
24	11329	(003441–)	Screw, Hex, M6 X 1.00 X 16, Nl, Ss	2
25	10576	(003441–)	Seal, Bulb, 90, 0.50d .06–.09grip 022.5l	1
26	1037346	(003441–)	Screw, Hex, M8 X 1.25 X 25, 9.8, Sems	8
27	06955	(003441–)	Screw, Hex, M8 X 1.25 X 35, 8.8	4
28	1068105	(003441–)	Insulation, Acstc, 0.5, 9.2 X 11.8 Ntch	1
29	07791	(003441–)	Nut, Hex, Flng, M8 X 1.25	4
30	223198	(003441–)	Screw, Hex, M5 X 0.80 X 10, Fmg	2
31	1058717	(003441–)	Plate Wldt, Lh	1
32	1058722	(003441–)	Plate Wldt, Rh	1
33	17284	(003441–)	Screw, Btn, M8 X 1.25 X 16, Ss	4
34	32491	(003441–)	Washer, Flat, 0.31, Std	4
35	11329	(003441–)	Screw, Hex, M6 X 1.00 X 16, Nl, Ss	6
36	32490	(003441–)	Washer, Flat, 0.25, Std	2
37	08085	(003441–)	Pin, Cotter, Hair, 0.31d .058 Wir	2
38	1068101	(003441–)	Insulation, Acstc, 0.5, 13.0 X 17.8 Ntch	1
39	1068102	(003441–)	Insulation, Acstc, 0.5, 15.4 X 20.5 Ntch	1
40	1077073	(003441–)	Nut, Push, Bolt Retention, Stl,5/16 Thrd	4

Fig. 7 – Rear Cover Latch Group (000000–002464)

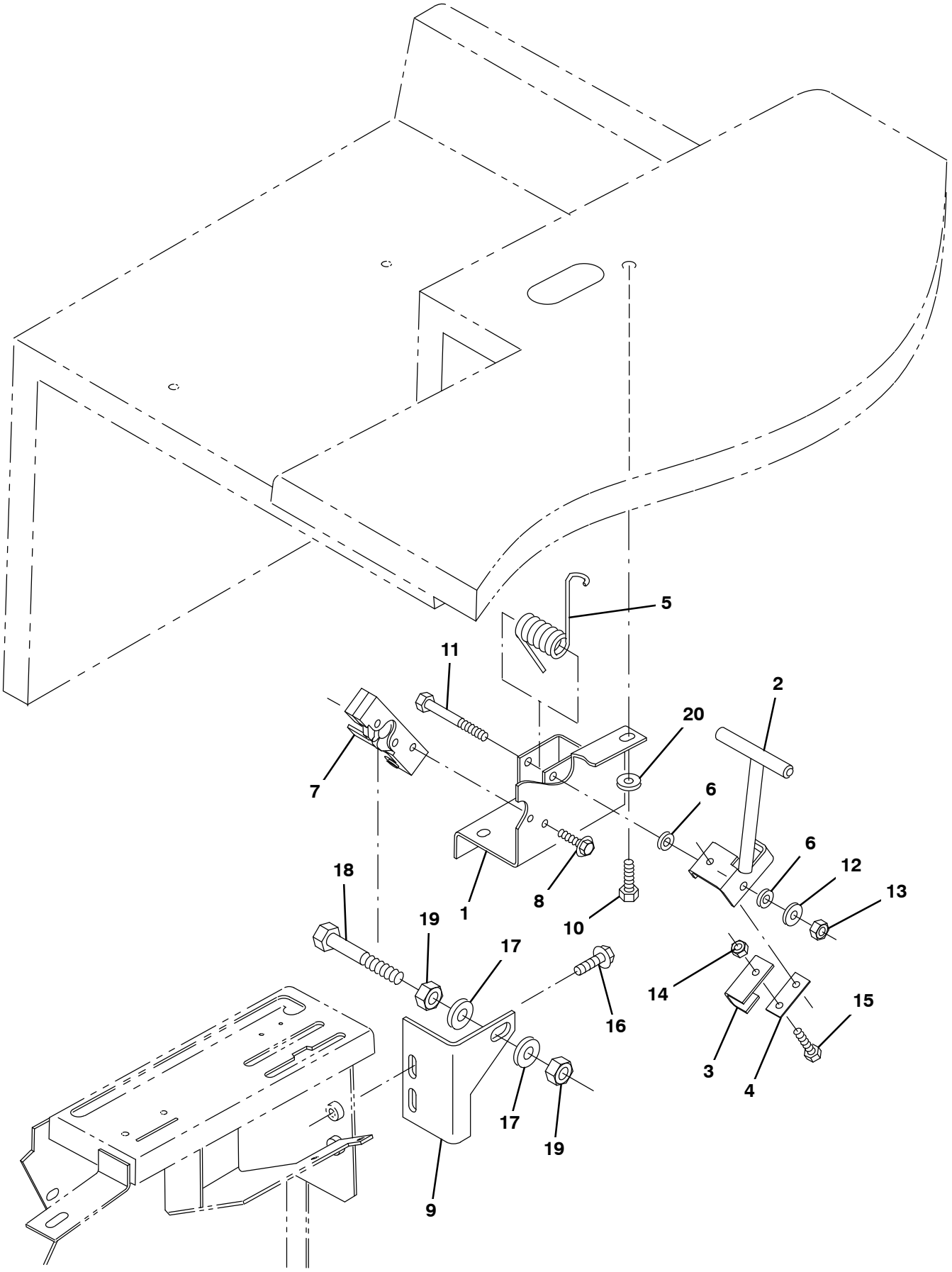

354924 – ALL, NA

Fig. 7 – Rear Cover Latch Group (000000–002464)

Ref.	Part No.	Serial Number	Description	Qty.
1	1052805	(000000–002464)	Bracket Wldt, Latch	1
2	1052817	(000000–002464)	Handle Wldt, Latch, Shrd	1
3	1052804	(000000–002464)	Channel, Latch	1
4	361165	(000000–002464)	Spring, Flat, .06, 0.75w X 01.8l, 2/.28h	1
5	87581	(000000–002464)	Spring, Tors, 0.81id .12wir 08.0coil	1
6	43454	(000000–002464)	Washer, Flat, 0.34b 0.69d .06, Nyl	2
7	72439	(000000–002464)	Latch	1
8	16949	(000000–002464)	Screw, Hex, .25–20 X 0.75, Sems	2
9	1052803	(000000–002464)	Bracket, Angle, Mtg, Pin, Latch	1
10	15675	(000000–002464)	Screw, Hex, M8 X 1.25 X 16, Ss	4
11	76960	(000000–002464)	Screw, Hex, .31–18 X 2.25, G5	1
12	32491	(000000–002464)	Washer, Flat, 0.31, Std	1
13	32983	(000000–002464)	Nut, Hex, Lock, .31–18, Nl	1
14	08708	(000000–002464)	Nut, Hex, Lock, M6 X 1.00, Nl	2
15	87308	(000000–002464)	Screw, Hex, M6 X 1.00 X 12, 8.8	2
16	1037346	(000000–002464)	Screw, Hex, M8 X 1.25 X 25, 9.8, Sems	2
17	32486	(000000–002464)	Washer Flat,0.50,Sae	2
18	27985	(000000–002464)	Screw, Hex, .50–13 X 2.50, G5	1
19	32523	(000000–002464)	Nut, Hex, Jam, .50–13	2
20	32491	(000000–002464)	Washer, Flat, 0.31, Std	4

Fig. 8 – Rear Cover Latch Group (002465–)

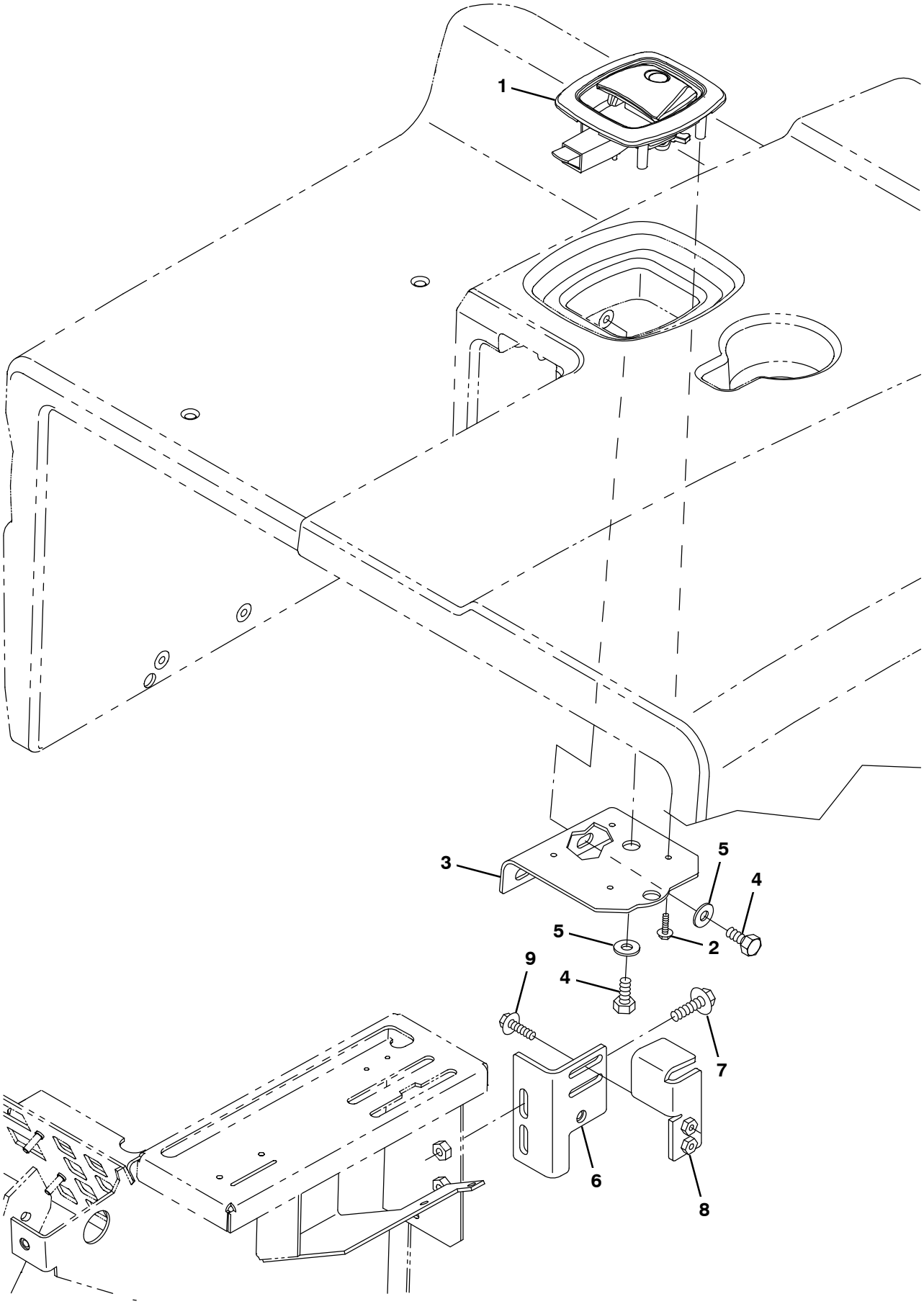

356272 – ALL, NA

Fig. 8 – Rear Cover Latch Group (002465–)

Ref.	Part No.	Serial Number	Description	Qty.
1	1068098	(002565–)	Latch, Paddle, Rwk	1
2	71026	(002565–)	Screw, Hex, M4 X 0.70 X 20, Fmg	1
3	1066146	(002565–)	Plate, Mtg, Latch	1
4	15675	(002565–)	Screw, Hex, M8 X 1.25 X 16, Ss	1
5	32491	(002565–)	Washer, Flat, 0.31, Std	1
6	1065829	(002565–)	Bracket, Latch, Mtg, Strike	2
7	1037346	(002565–)	Screw, Hex, M8 X 1.25 X 25, 9.8, Sems	1
8	1066138	(002565–)	Bracket, Adj, Strike	2
9	1036892	(002565–)	Screw, Hex, M6 X 1.00 X 25, 9.8, Sems	1

Fig. 9 – Operator Station Group

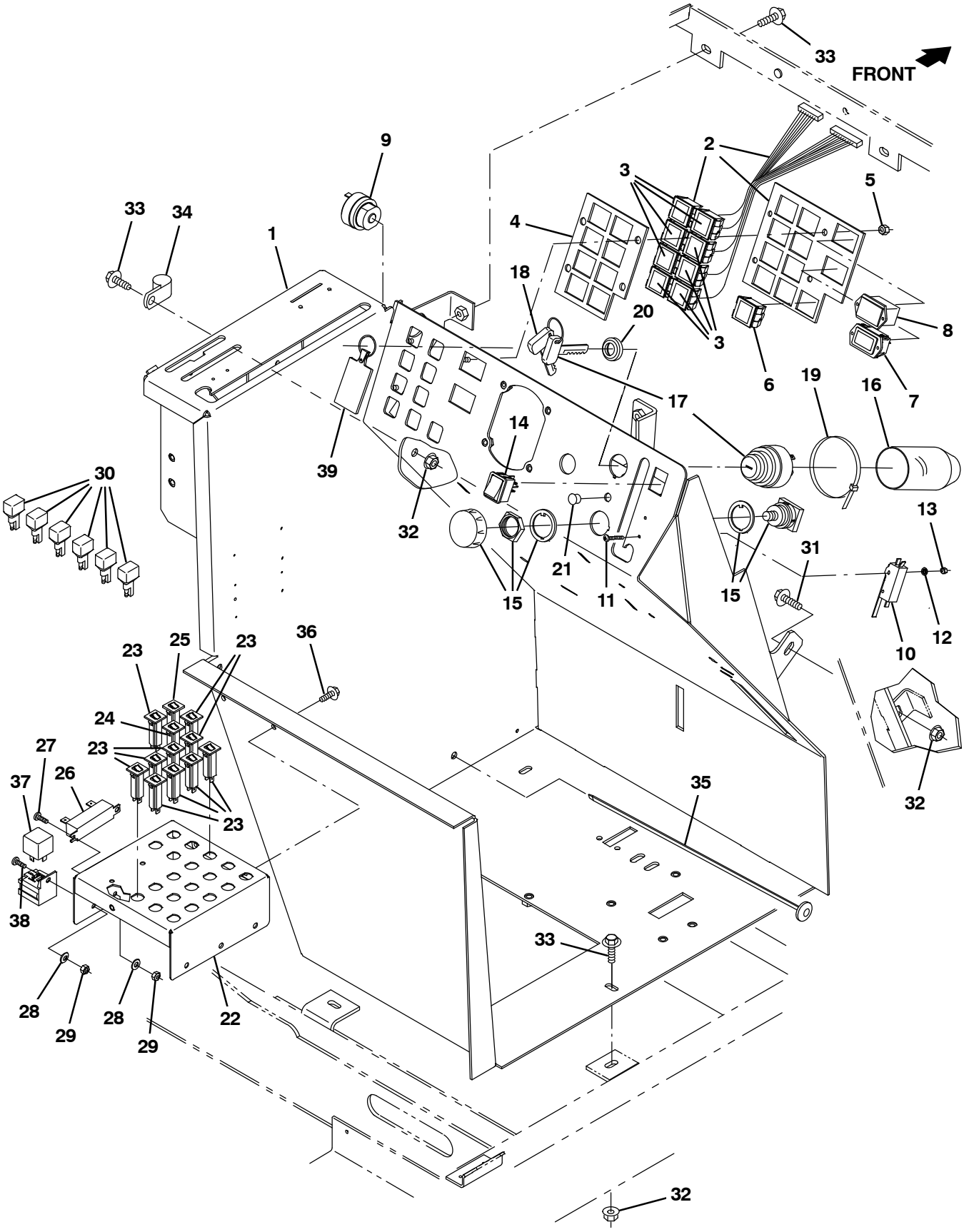

354931 – E, NA

Fig. 9 – Operator Station Group

	Ref.	Part No.	Serial Number	Description	Qty.
	1	9006980	(000000–)	Panel, Oprtr Station, W/ Label, Na [S20e]	1
	1	9006981	(000000–)	Panel, Oprtr Station, W/ Label, Jp [S20e]	1
▽	2	1051135	(000000–)	Panel Assy, Indicator Light, Ele	1
▲	3	361074	(000000–)	Light, Panl, 36vdc, 1.1 X 1.0	8
	4	1045211	(000000–)	Seal, Rbr, Clsd, 0.38, Instmt Panl	1
	5	08708	(000000–)	Nut, Hex, Lock, M6 X 1.00, Nl	4
	6	361074	(000000–)	Light, Panl, 36vdc, 1.1 X 1.0	1
	7	1068904	(000000–)	Gauge, Hourmeter, 05–277vdc/Vac, 2–Hole	1
	8	1038957	(000000–)	Gauge, Discharge, Battery, 36vdc, Led	1
	9	386346	(000000–)	Alarm, Audio, 10–48vdc [Mallory]	1
	10	1008142	(000000–)	Switch, Snap, 25a Spdt	1
	11	1054872	(000000–)	Screw, Pan, Phl, M3 X 0.5 X 25, Blk	2
	12	39658	(000000–)	Washer, Lock, Int, 04	2
	13	01754	(000000–)	Nut, Hex, Std, M3 X 0.50, 8	2
	14	1048456	(000000–)	Switch, Rocker, 3 Position	1
	15	1053842	(000000–)	Switch, Safety, Shutoff	1
	16	383165	(000000–)	Boot, Switch, Ignition	1
▽	17	87536	(000000–)	Switch, Ignition [Ku]	1
▲	18	87866	(000000–)	Key, Ignition [Set Of 2]	1
	19	49263	(000000–)	Tie, Cable, Nyl, 11.4l .19w 3.0 Max D	1
	20	382516	(000000–)	Boot, .63id .29l .90w	1
	21	33807	(000000–)	Plug, Hole, Rnd, 0.44h .03–.12, Blk Nyl	1
	22	1057040	(000000–)	Bracket, Mtg, Circuitbreaker, Ele	1
	23	1064184	(000000–)	Circuitbreaker, 2.5a, Resetable	10
	24	1064188	(000000–)	Circuitbreaker, 15a, Resetable	1
	25	1064189	(000000–)	Circuitbreaker, 20a, Resetable	1
	26	87349	(000000–)	Resistor, 040.000hm, 0040watt	1
	27	09200	(000000–)	Screw, Pan, Phl, M5 X 0.80 X 12, Ss	2
	28	19066	(000000–)	Washer, Flat, 10	3
	29	06549	(000000–)	Nut, Hex, Lock, M5 X 0.80, Nl	3
	30	222290	(000000–)	Diode, Ele, Plug	6
	31	1037354	(000000–)	Screw, Hex, M8 X 1.25 X 30, 9.8, Sems	1
	32	07791	(000000–)	Nut, Hex, Flng, M8 X 1.25	5
	33	1037346	(000000–)	Screw, Hex, M8 X 1.25 X 25, 9.8, Sems	6
	34	58366	(000000–)	Clamp, Cable, Stl, 1.25d X 1.00w, 1hole	1
	35	1041873	(000000–)	Fastener, Wire, Tie [Button Head]	3
	36	1040467	(000000–)	Screw, Hex, M6 X 1.00 X 20, 9.8, Sems	2
	37	398526	(000000–)	Relay, 36vdc, 005a, Spdt No [Greenwich]	1
	38	39239	(000000–)	Screw, Pan, Phl, 10–32 X 0.50, G2, Blk	1
	39	1075003	(000000–)	Keychain, Rectangle, Parts & Service	1

Fig. 10 – Steering Wheel Group

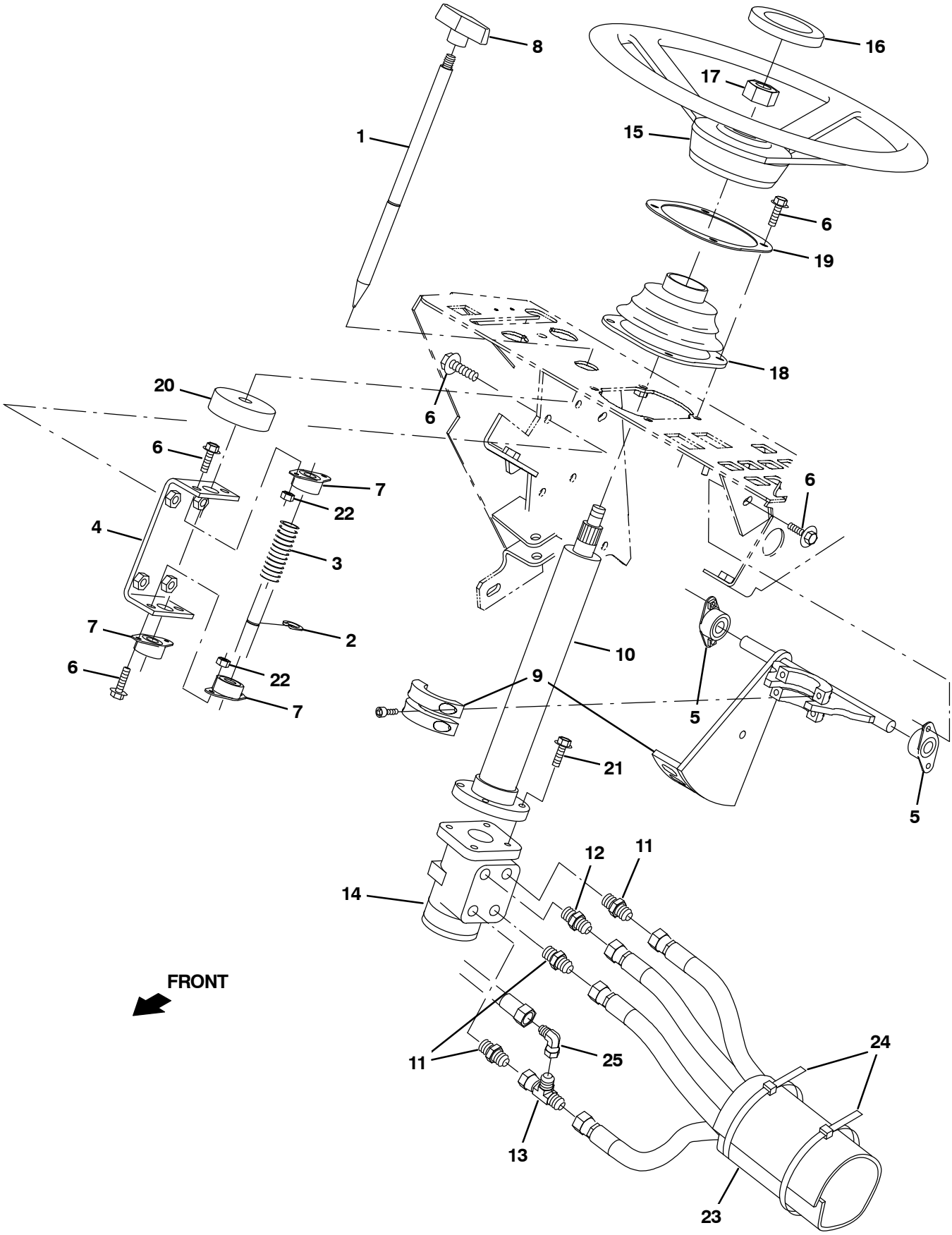

354988 – E, NA

Fig. 10 – Steering Wheel Group

Ref.	Part No.	Serial Number	Description	Qty.
1	360711	(000000–)	Rod, Latch, Tilt, Steering	1
2	70717	(000000–)	Ring, Retaining, Ext, 0.50d, Hd	1
3	22290	(000000–)	Spring, Cmpr, 0.72od .06wir 02.3l	1
4	1045222	(000000–)	Channel, Mtg, Steering Latch	1
5	70709	(000000–)	Bearing, Flng, 2hole, 0.50b	2
6	1036892	(000000–)	Screw, Hex, M6 X 1.00 X 25, 9.8 Sems	16
7	47585	(000000–)	Bearing, Flng, 2hole, 0.50b [Nyl]	3
8	04706	(000000–)	Knob, Tee, 0.38–16, 2.5 X 1.0 1.1l,Plstc	1
9	1058784	(000000–)	Bracket Wldt, Steering, Tilt	1
10	1048351	(000000–)	Column, Steering, 09.9l 0.86d 36tooth	1
11	56690	(000000–002999)	Fitting, Hyd, Str, Jm06/Om06	3
11	762433	(003000–)	Fitting, Hyd, Str, Fm06/Om06	5
12	56835	(000000–002999)	Fitting, Hyd, Str, Jm08/Om06	1
12	762459	(000000–)	Fitting, Hyd, Str, Fm08/Om06	1
13	42215	(000000–002999)	Fitting, Hyd, Tee, Jf06/Jm06/Jm06, Run	1
13	762435	(003000–)	Fitting, Hyd, Tee, Ff06/Fm06/Fm06, Run	1
14	74173	(000000–)	Steer–Control, Hyd04, 07.3 0600 (See Breakdowns)	1
15	1058996	(000000–)	Wheel, Steering, 14.0D 0.81B 36Tooth	1
16	1075168	(000000–)	Button, Cntrl, Horn [Isolated]	1
17	56185	(000000–)	Nut, Hex, Jam, M20 X 1.5	1
18	70622	(000000–)	Boot, Bellows, 3.1l 4.4w 2.8h 1hole, Neo	1
19	360867	(000000–)	Plate, Mtg	1
20	75968	(000000–)	Insulation, Acstc, Rnd, 0.8, 02.5d 0.5h	1
21	21195	(000000–)	Screw, Hex, .38–16 X 0.75, G5	4
22	08708	(000000–)	Nut, Hex, Lock, M6 X 1.00, Nl	4
23	82833	(000000–)	Sleeve, Nyl, 1.22id 35.0l	1
24	49263	(000000–)	Tie, Cable, Nyl, 11.4l .19w 3.0 Max D	1
25	47504	(000000–002999)	Fitting, Hyd, E90, Jf06/Jm06	1
25	1072195	(003000–)	Fitting, Hyd, E90, Ff06/Fm06	1

Fig. 11 – Directional Pedal Group

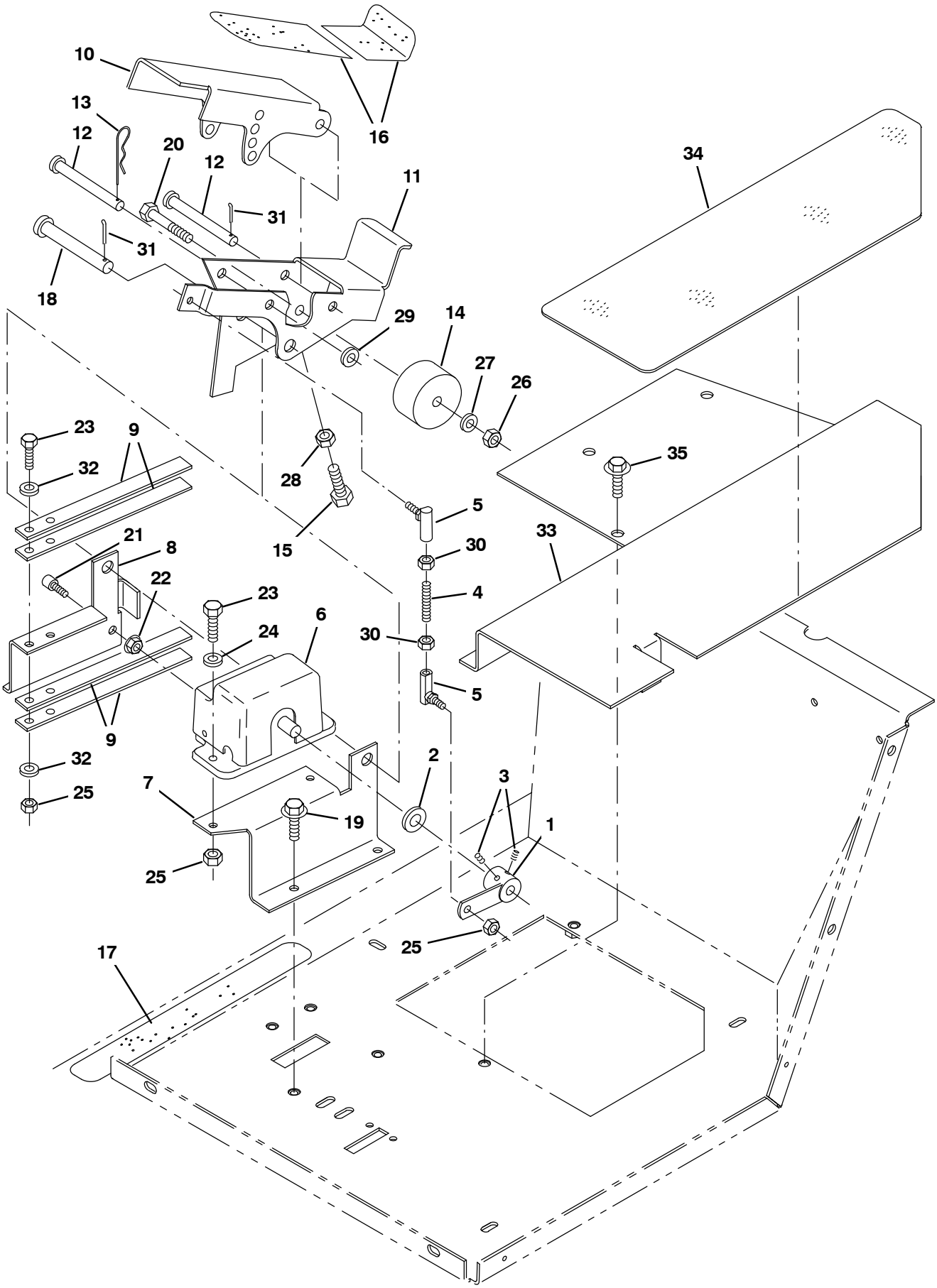

354989 – E

Fig. 11 – Directional Pedal Group

Ref.	Part No.	Serial Number	Description	Qty.
1	1050955	(000000–)	Arm Wldt, Cntrl, Dir	1
2	43611	(000000–)	Washer, Flat, 0.39b 0.75d .06, Nyl	1
3	17186	(000000–)	Screw, Set, Soc, M5 X 0.80 X 8, Pl [45h]	2
4	14397	(000000–)	Rod, Thrd, 2 End, M06 X 1.0 02.2l	1
5	12263	(000000–)	Balljoint, M6 X 1.0 Fem, M6 X 1.0 Mal	2
6	14368	(000000–)	Throttle, Electronic, 0000/5000 Ohm	1
7	1050957	(000000–)	Bracket, Mtg, Pedal, Lh	1
8	1052531	(000000–)	Bracket, Mtg, Pedal, Rh	1
9	49681	(000000–)	Spring, Flat, .06, 0.75w X 07.8l	4
10	1052540	(000000–)	Pedal, Propel, Adj, Upper	1
11	1052541	(000000–)	Pedal Wldt, Propel, Lower, Adj	1
12	72084	(000000–)	Pin, Clevis, 0.37d X 3.50l	2
13	44906	(000000–)	Pin, Cotter, Hair, 0.38d .093 Wir	1
14	87725	(000000–)	Spacer, Plstc, 0.41b 2.25d 1.30l, Nyl	1
15	36801	(000000–)	Screw, Hex, .38–16 X 1.50, Fl	1
16	75430	(000000–)	Tread, Non–Skid, 02.2w 15.5l	1
17	86798	(000000–)	Tread, Non–Skid, 01.4w 12.0l	1
18	06474A	(000000–)	Pin, Clevis, 0.50d X 3.50l	1
19	1037346	(000000–)	Screw, Hex, M8 X 1.25 X 25, 9.8, Sems	4
20	06963	(000000–)	Screw, Hex, M10 X 1.50 X 60, 8.8	1
21	39308	(000000–)	Screw, Soc, M8 X 1.25 X 25, 12.9	1
22	07791	(000000–)	Nut, Hex, Flng, M8 X 1.25	1
23	06943	(000000–)	Screw, Hex, M6 X 1.00 X 20, 8.8	5
24	32483	(000000–)	Washer, Flat, 0.25, Sae	2
25	08708	(000000–)	Nut, Hex, Lock, M6 X 1.00, Nl	5
26	41430	(000000–)	Nut, Hex, Lock, M10 X 1.5, Nl	1
27	32485	(000000–)	Washer, Flat, 0.38, Sae	1
28	25014	(000000–)	Nut, Hex, Std, .38–16	1
29	32486	(000000–)	Washer Flat,0.50,Sae	1
30	41359	(000000–)	Nut, Hex, Std, M6 X 1.00, 8	2
31	08182	(000000–)	Pin, Cotter, .125 X 1.00	2
32	32490	(000000–)	Washer, Flat, 0.25, Std	4
33	1048508	(000000–)	Cover, Plt, Floor	1
34	360906	(000000–)	Tread, Non–Skid, 06.5w 20.6l	1
35	1037346	(000000–)	Screw, Hex, M8 X 1.25 X 25, 9.8, Sems	4

Fig. 12 – Wheel and Brake Group, Front

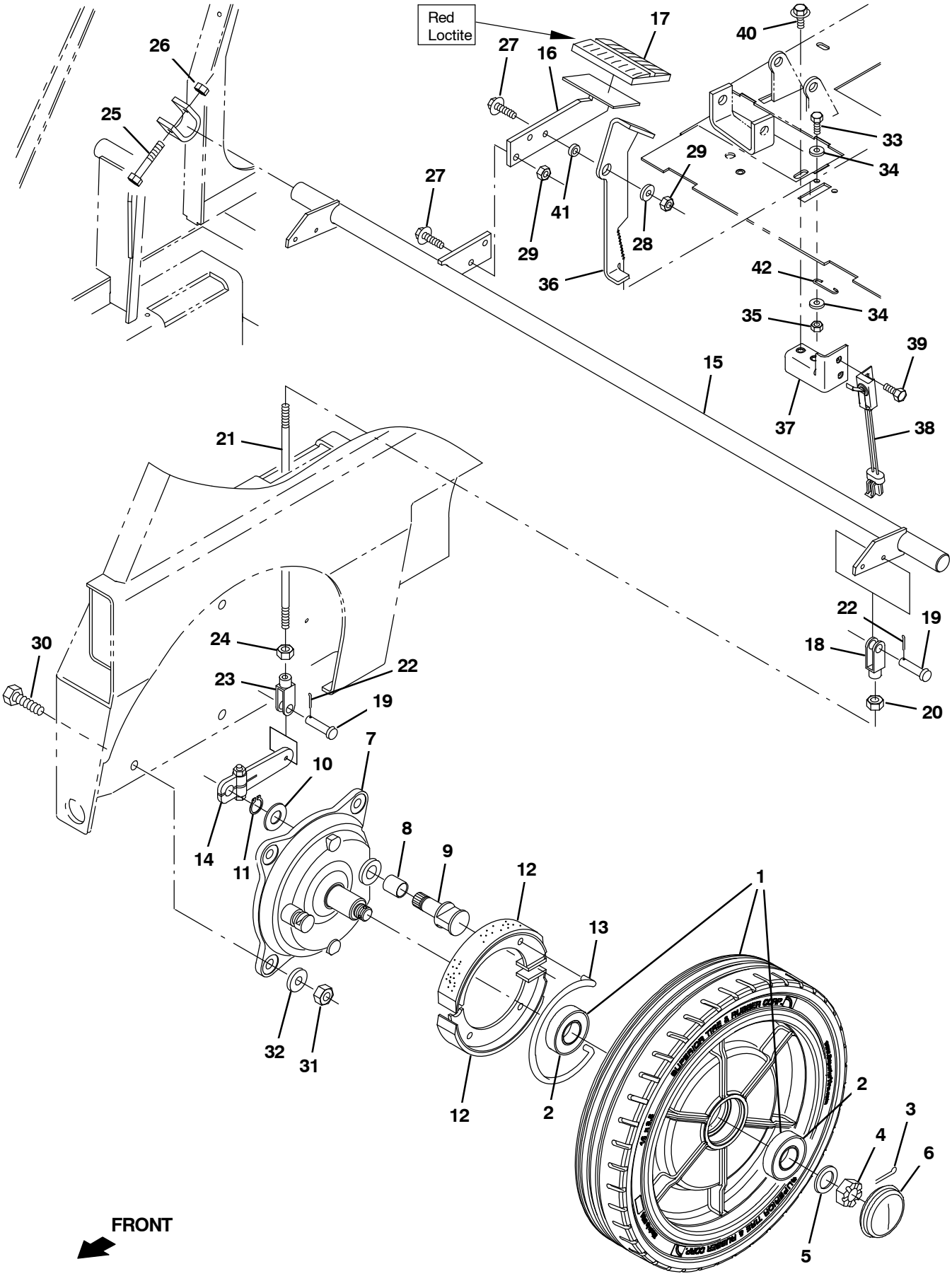

356003 – E

Fig. 12 – Wheel and Brake Group, Front

	Ref.	Part No.	Serial Number	Description	Qty.
▽	1	1076240	(000000–)	Tire Assy, Idler, 16.0 X 3.5, Rubber	2
▲	2	360074	(000000–)	Bearing, Ball, 1.18b 2.44d 0.63w	2
	3	08182	(000000–)	Pin, Cotter, .125 X 1.00	2
	4	86659	(000000–)	Nut, Hex, Sltd, .75–16	2
	5	49145	(000000–)	Washer, Flat, 0.76b 1.50d .06, Ss	2
	6	54390	(000000–)	Cap, Hub, Dust, 2.57d 0.77l	2
▽		360023	(000000–)	Brake Assy	2
▲	7	360270	(000000–)	Plate, Backing, Brake	1
▲	8	360271	(000000–)	Bushing, Sleeve, 0.78b 0.86d 0.93l, Bnz	1
▲	9	360272	(000000–)	Cam, Plt, Brake [Nickel]	1
▲	10	360273	(000000–)	Washer, Flat, M21.0b X 37d X 3	1
▲	11	360274	(000000–)	Retainer, Ring, Brake	1
▲	12	360275	(000000–)	Shoe, Brake, 180 X 30mm	2
▲	13	360276	(000000–)	Spring, Wir, 0.25d, Brake Return	1
	14	360802	(000000–)	Arm, Lever, Brake, 4.1 [Knott]	2
	15	1052114	(000000–)	Shaft Wldt, Brush	1
	16	1052113	(000000–)	Pedal Wldt, Brake	1
	17	51109	(000000–)	Pad, Pedal, Brake, 3.96l 2.36w 0.75	1
▽		9019140	(000000–)	Brake Kit, Linkage Ci [S20]	2
▲	18	14595–1	(000000–)	Clevis, Adj, 0.25pin, 0.25–28 Rh, Pl	1
▲	19	14605	(000000–)	Pin, Clevis, 0.25d X 0.75l	2
▲	20	32899	(000000–)	Nut, Hex, Jam, .25–28	1
▲	21	1247287	(000000–)	Rod, Thrd, 2 End, .25–28 16.00l	1
▲	22	08170	(000000–)	Pin, Cotter, .062 X 0.50	2
▲	23	364864	(000000–)	Clevis, Adj, 0.25pin, 0.25–28 Lh, Pl	1
▲	24	364948	(000000–)	Nut, Hex, Std, .25–28, Lh	1
	25	06949	(000000–)	Screw, Hex, M6 X 1.00 X 50, 8.8	2
	26	08708	(000000–)	Nut, Hex, Lock, M6 X 1.00, Nl	2
	27	1037355	(000000–)	Screw, Hex, M8 X 1.25 X 35, 9.8, Sems	3
	28	32491	(000000–)	Washer, Flat, 0.31, Std	1
	29	08709	(000000–)	Nut, Hex, Lock, M8 X 1.25, Nl	3
	30	06968	(000000–)	Screw, Hex, M12 X 1.75 X 35, 8.8	8
	31	08711	(000000–)	Nut, Hex, Lock, M12 X 1.75, Nl	8
	32	32486	(000000–)	Washer Flat,0.50,Sae	8
	33	1054875	(000000–)	Screw, Hex, M5 X 1.0 X 16, Blk	2
	34	19066	(000000–)	Washer, Flat, 10	4
	35	06549	(000000–)	Nut, Hex, Lock, M5 X 0.80, Nl	2
	36	1046553	(000000–)	Lever, Stop, Brake	1
	37	1048142	(000000–)	Bracket, Switch, Brake	1
	38	1039735	(000000–)	Switch, Snap, 15a No	1
	39	87308	(000000–)	Screw, Hex, M6 X 1.00 X 12, 8.8	2
	40	1020341	(000000–)	Screw, Hex, M8 X 1.25 X 20, Ss, Sems	2
	41	1052263	(000000–)	Tube, 0.34id 0.62od 00.2l, Stl	1
	42	71367	(000000–)	Spring, Wir, 0.08d, Parking Brake	1

Fig. 13 – Steering Cylinder Group (000000–005799)

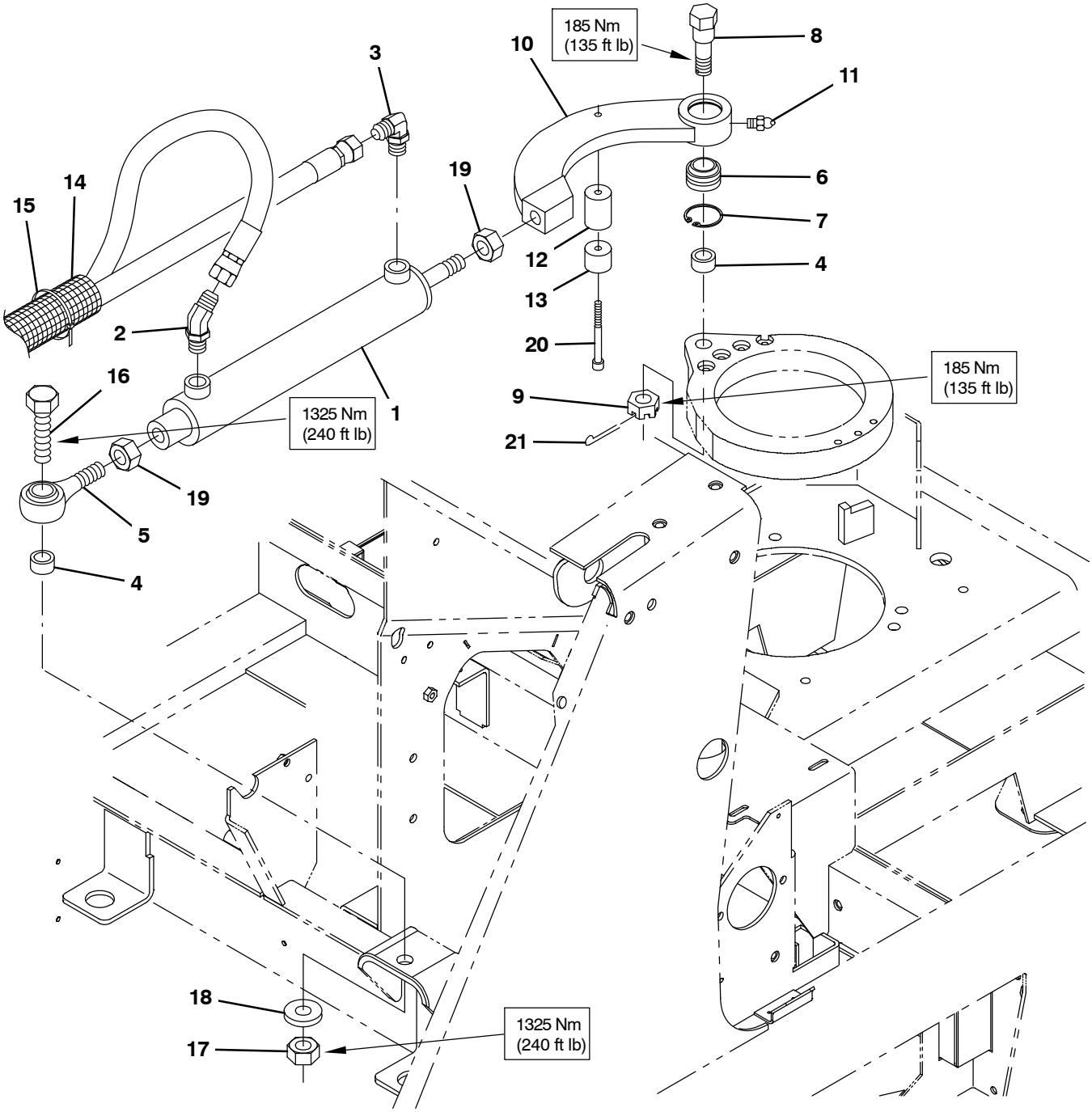

356004– E, NA

Fig. 13 – Steering Cylinder Group (000000–005799)

Ref.	Part No.	Serial Number	Description	Qty.
1	1036631	(000000–005799)	Cylinder, Hyd, 2.0b 19.0l 12.00strk 1500	1
2	47522	(000000–002999)	Fitting, Hyd, E45, Jm06/Om06	1
2	762442	(003000–005799)	Fitting, Hyd, E45, Fm06/Om06	1
3	56820	(000000–002999)	Fitting, Hyd, E90, Jm06/Om06	1
3	762432	(003000–005799)	Fitting, Hyd, E90, Fm06/Om06	1
4	69928	(000000–005799)	Tube, 0.77id 1.13od 00.6l, Stl, Pl	2
5	64886	(000000–005799)	Rod–End, 0.75–16rh Mal 0.75b [Teflon]	1
6	42120–4	(000000–005799)	Bearing, Self Align, 1.00b 1.63d	1
7	69925	(000000–005799)	Ring, Retaining, Int, 1.63d	1
8	69924	(000000–005799)	Shaft, Pivot, Steering	1
9	39527	(000000–005799)	Nut, Hex, Sltd, .75–16	1
10	1052560	(000000–005799)	Arm, Steering	1
11	07259	(000000–005799)	Fitting, Grease, Str Pm04 .47l	1
12	1052561	(000000–005799)	Spacer	1
13	69926	(000000–005799)	Pad, Wear, Pye, 1.25d 1.0l	1
14	82833	(000000–005799)	Sleeve, Nyl, 1.22id 35.0l	1
15	49263	(000000–005799)	Tie, Cable, Nyl, 11.4l .19w 3.0 Max D	3
16	58056	(000000–005799)	Screw, Hex, .75–10 X 3.00, G5	1
17	32987	(000000–005799)	Nut, Hex, Lock, .75–10, Nl	1
18	39350	(000000–005799)	Washer, Flat, 0.75, Sae	1
19	35886	(000000–005799)	Nut, Hex, Jam, .75–16	2
20	09037	(000000–005799)	Screw, Soc, M8 X 1.25 X 70, 12.9	1
21	08175	(000000–005799)	Pin, Cotter, .125 X 1.25	1

Fig. 14 – Wheel Group, Rear Drive (000000–005799)

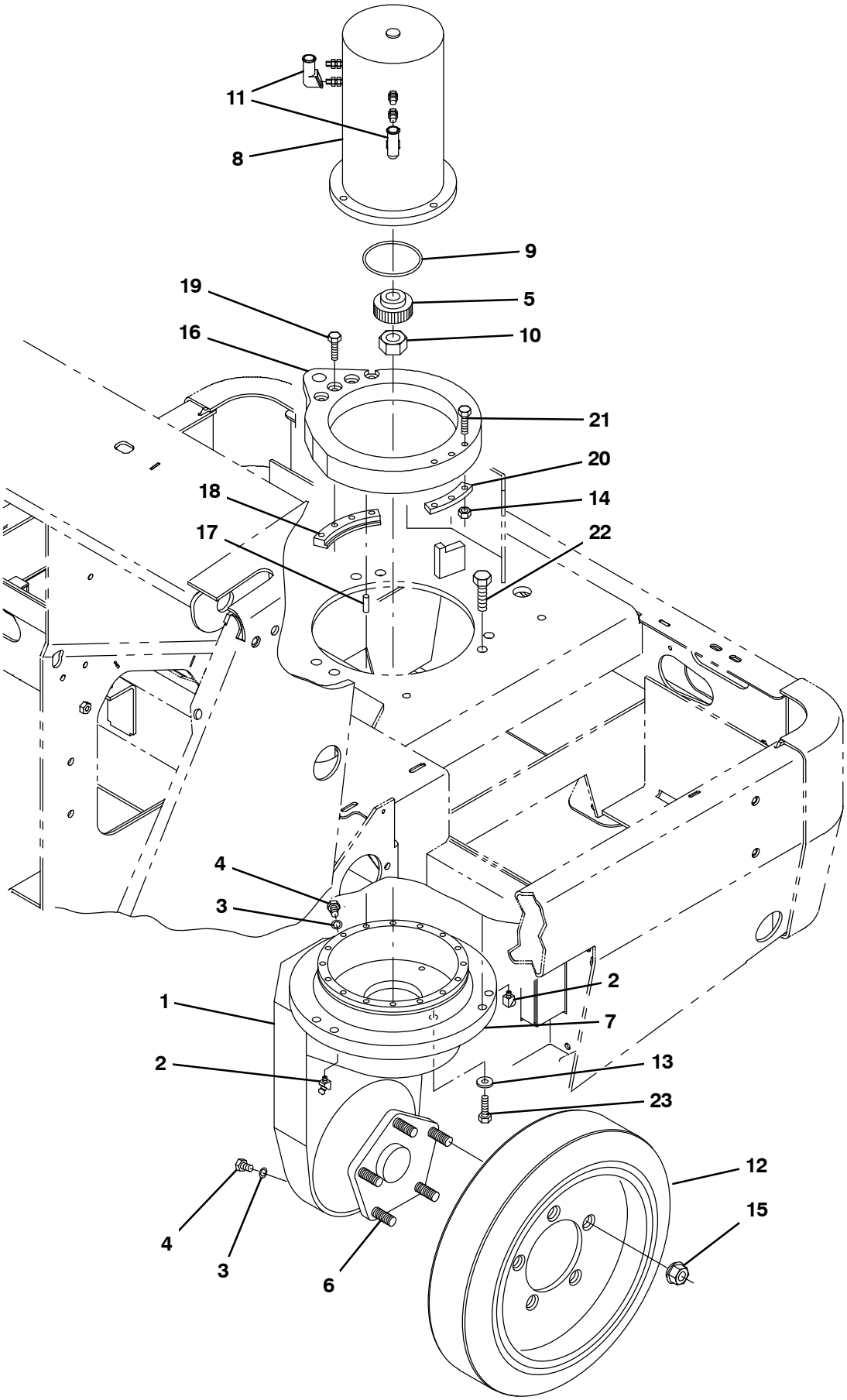

356005 – E

Fig. 14 – Wheel Group, Rear Drive (000000–005799)

	Ref.	Part No.	Serial Number	Description	Qty.
▽	1	87355	(000000–005799)	Gearbox, 90, Drive Wheel, Rear [Hu]	1
▲	2	87839	(000000–005799)	Fitting, Grease	2
▲	3	87840	(000000–005799)	Seal, Org	2
▲	4	87841	(000000–005799)	Plug, Gearbox, Drive Wheel	2
▲	5	87849	(000000–005799)	Gear, Drive	1
▲	6	12540	(000000–005799)	Bolt, Gearbox, Drive Wheel	5
▲	7	61791	(000000–005799)	Housing, Upper, Gearbox, Drive Wheel	1
	8	360065	(000000–005799)	Motor, Ele, 36vdc 2130rpm 2.10hp (See Breakdowns)	1
	9	360980	(000000–005799)	Seal, Org, .139 X 02.98id	1
	10	360680	(000000–005799)	Nut, Hex, Lock, M14 X 1.50, Nl	1
	11	02076	(000000–005799)	Boot, 90deg .50id .57id X .84id 1.0l,Blk	4
	12	1063246	(000000–005799)	Tire, Drive, Swpr, Blk, 16.0x4.0	1
	12	1063248	(000000–005799)	Tire, Drive, Swpr, Grey, 16.0x4.0 (Optional non–Marking)	1
	13	32984	(000000–005799)	Washer, Lock, Int, 0.31	2
	14	08713	(000000–005799)	Nut, Hex, Lock, M8 X 1.25, Nl, Ss	3
	15	87750	(000000–005799)	Nut, Wheel, M14–1.5	5
	16	1052562	(000000–005799)	Ring, Steering	1
	17	87749	(000000–005799)	Pin, Dowel, 0.3127d X 1.00l	8
	18	55808	(000000–005799)	Clamp, Steering	1
	19	72040	(000000–005799)	Screw, Hex, M8 X 1.25 X 45, 10.9	4
	20	1052563	(000000–005799)	Clamp, Steering	1
	21	39278	(000000–005799)	Screw, Hex, M8 X 1.25 X 50, 8.8	3
	22	41346	(000000–005799)	Screw, Hex, M12 X 1.75 X 30, 8.8	6
	23	06958	(000000–005799)	Screw, Hex, M8 X 1.25 X 80, 8.8	2

Fig. 15 – Wheel Group, Rear Drive (005800–)

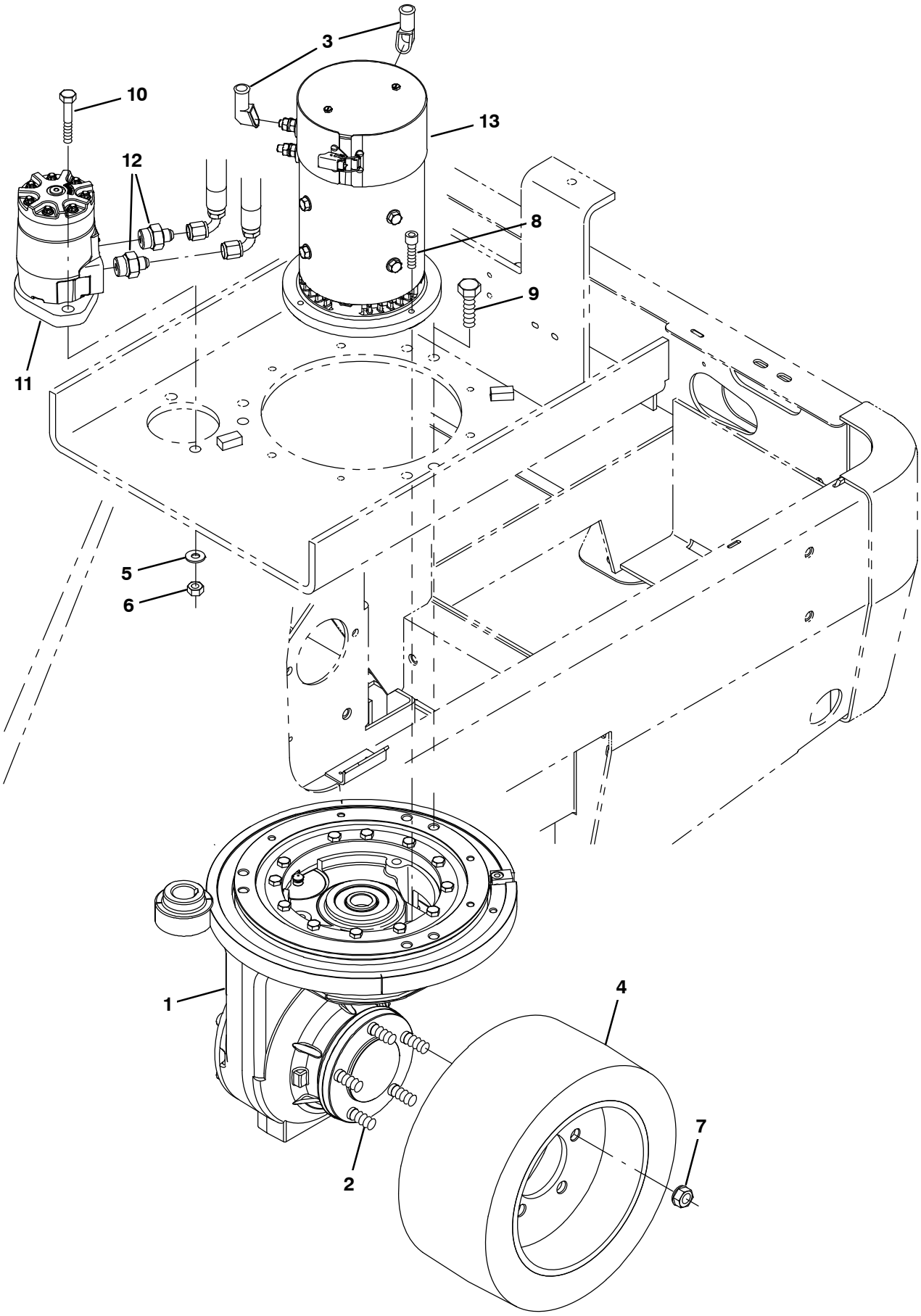

356610 – E

Fig. 15 – Wheel Group, Rear Drive (005800–)

	Ref.	Part No.	Serial Number	Description	Qty.
▽	1	1072792	(005800–)	Gearbox, Drive, 90, Wheel [Zf Gk20]	1
▲	2	9021441	(005800–)	Bolt, Gearbox	6
	3	02076	(005800–)	Boot, 90deg .50id .57id X .84id 1.0l,Blk	4
	4	1073612	(005800–)	Tire Assy, Solid, 12.0 X 5.5, Blk	1
	5	32984	(005800–)	Washer, Lock, Int, 0.31	2
	6	08713	(005800–)	Nut, Hex, Lock, M8 X 1.25, Nl, Ss	2
	7	87750	(005800–)	Nut, Wheel, M14–1.5	5
	8	1074369	(005800–)	Bolt, Shld, 10mmd X 010mm, M8 X 1.25	3
	9	41346	(005800–)	Screw, Hex, M12 X 1.75 X 30, 8.8	6
	10	14455	(005800–)	Screw, Hex, M8 X 1.25 X 160, 8.8	2
▽	11	1074091	(005800–)	Motor, Hyd, Gear, Int 14.9 Bi–Dir 1300	1
▲		373423	(005800–)	Seal Kit, Motor	1
	12	762439	(005800–)	Fitting, Hyd, Str, Fm06/Om10	2
▽	13	1073173	(005800–)	Motor, Ele, 36vdc 1300rpm 2.10hp	1
▲		361961	(005800–)	Brush Kit, Motor, W/ Wire [Av]	1

Fig. 16 – Brush Lift Group, Main

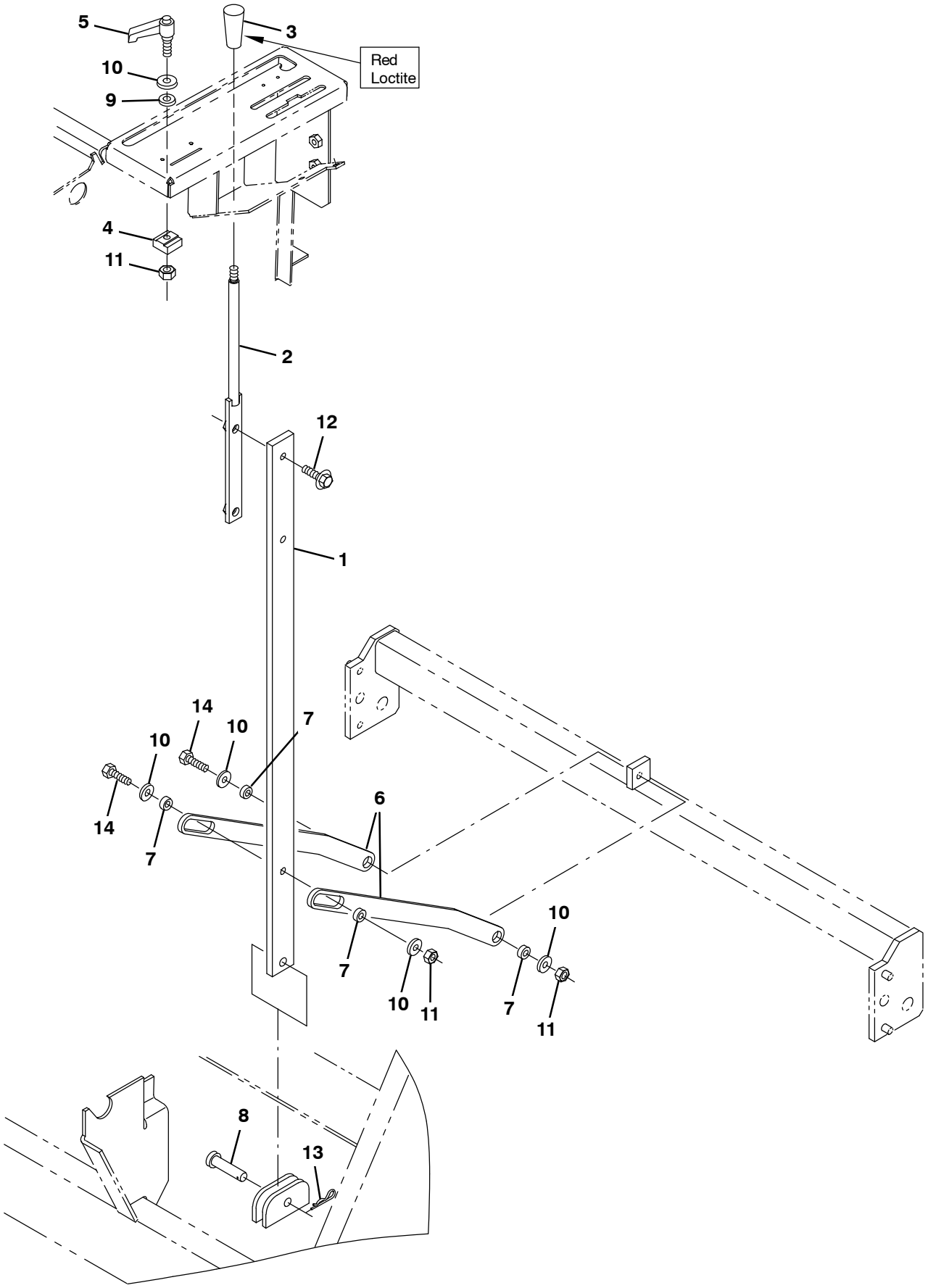

354957 – ALL

Fig. 16 – Brush Lift Group, Main

Ref.	Part No.	Serial Number	Description	Qty.
1	1048801	(000000–)	Lever, Brush Lift	1
2	1055049	(000000–)	Handle Wldt, Lift, Brush	1
3	54995	(000000–)	Knob, 1.12d 3.86l M10 X 1.5, Plstc Tpr]	1
4	360774	(000000–)	Block, Adj	1
5	375020	(000000–)	Lever, Adj, Plstc	1
6	1076300	(000000–)	Link, Lift, Main Brush	2
7	360460	(000000–)	Sleeve, P/M, 0.34b 0.63d 0.4l, Ss / Oil	4
8	51529	(000000–)	Pin, Clevis, 0.50d X 1.25l	1
9	1055074	(000000–)	Washer, Sealing, M8	1
10	32491	(000000–)	Washer, Flat, 0.31, Std	5
11	08709	(000000–)	Nut, Hex, Lock, M8 X 1.25, Nl	3
12	1037354	(000000–)	Screw, Hex, M8 X 1.25 X 30, 9.8, Sems	2
13	44906	(000000–)	Pin, Cotter, Hair, 0.38d .093 Wir	1
14	06956	(000000–)	Screw, Hex, M8 X 1.25 X 45, 8.8	2

Fig. 17 – Brush Cable Lift Group, Main

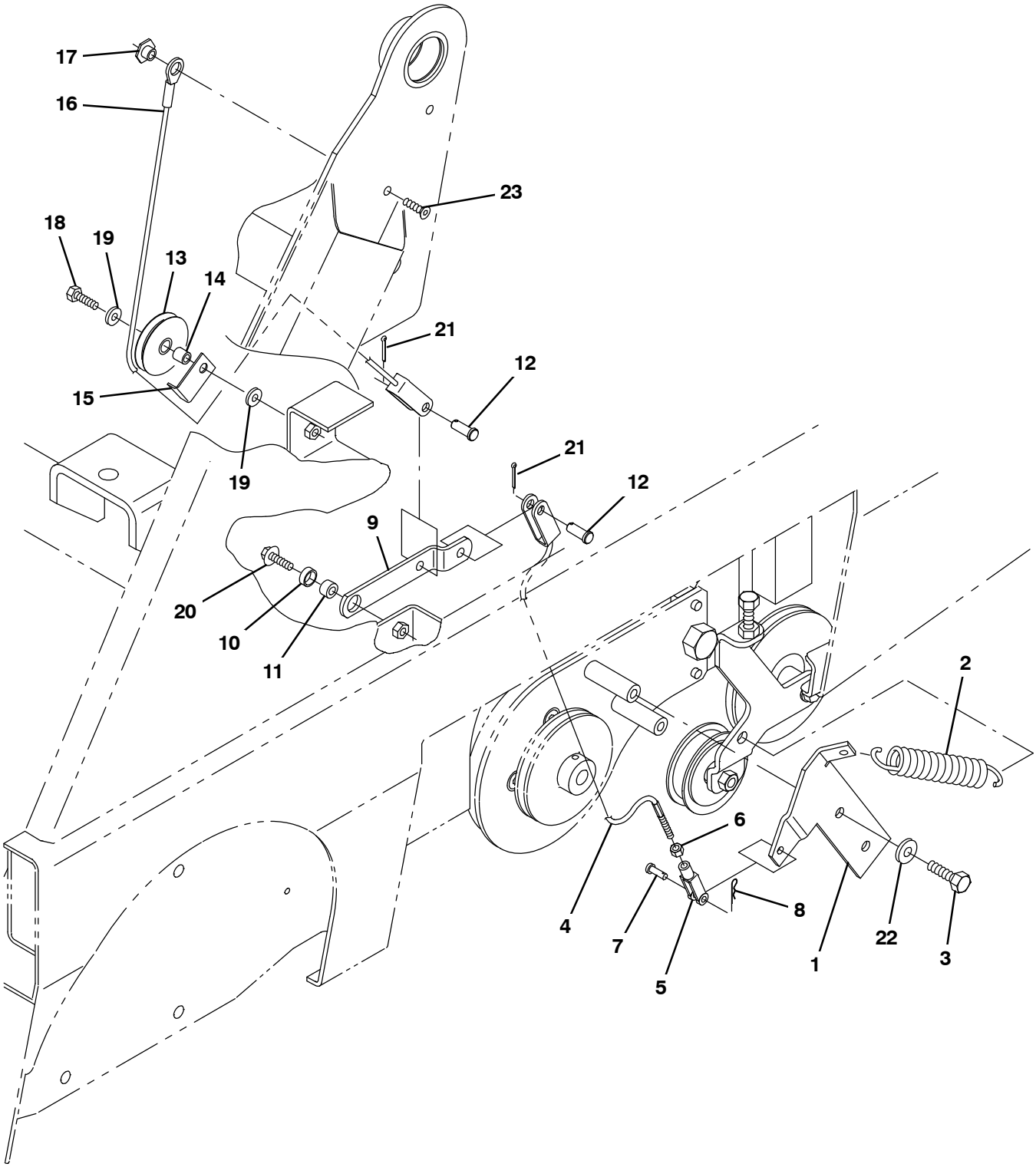

356006– E

Fig. 17 – Brush Cable Lift Group, Main

Ref.	Part No.	Serial Number	Description	Qty.
1	1049220	(000000–)	Bracket, Lift, Brush, Auto	1
2	360488	(000000–)	Spring, Extn	1
3	09291	(000000–)	Screw, Hex, M10 X 1.50 X 20, Ss	2
4	361096	(000000–)	Cable, Glv .13d 010.3l .4clevis /.25–28	1
5	14595–1	(000000–)	Clevis, Adj, 0.25pin, 0.25–28 Rh, Pl	1
6	01714	(000000–)	Nut, Hex, Std, .25–28	1
7	14605	(000000–)	Pin, Clevis, 0.25d X 0.75l	1
8	08085	(000000–)	Pin, Cotter, Hair, 0.31d .058 Wir	1
9	1049224	(000000–)	Plate, Pivot, Lift, Auto	1
10	360491	(000000–)	Bushing, Sleeve, 0.63b 0.72d 0.25l	1
11	360460	(000000–)	Sleeve, P/M, 0.34b 0.63d 0.4l, Ss / Oil	1
12	09088	(000000–)	Pin, Clevis, 0.37d X 1.00l	2
13	360454	(000000–)	Pulley, Cable, 2.5d 0.50b, .22d Cable	1
14	222460	(000000–)	Sleeve, P/M, 0.32b 0.50d 0.5l [430ss]	1
15	360413	(000000–)	Angle, Keeper, Cable	1
16	361097	(000000–)	Cable, Glv .13d 031.0l .4clevis /.55eye	1
17	361114	(000000–)	Spacer	1
18	06955	(000000–)	Screw, Hex, M8 X 1.25 X 35, 8.8	1
19	32491	(000000–)	Washer, Flat, 0.31, Std	2
20	1037354	(000000–)	Screw, Hex, M8 X 1.25 X 30, 9.8, Sems	1
21	39005	(000000–)	Pin, Cotter, .094 X 0.75	2
22	32492	(000000–)	Washer, Flat, 0.38, Std	2
23	360821	(000000–)	Screw, Flt, Soc, M8 X 1.25 X 16, 10.9	1

Fig. 18 – Brush Drive Group, Main

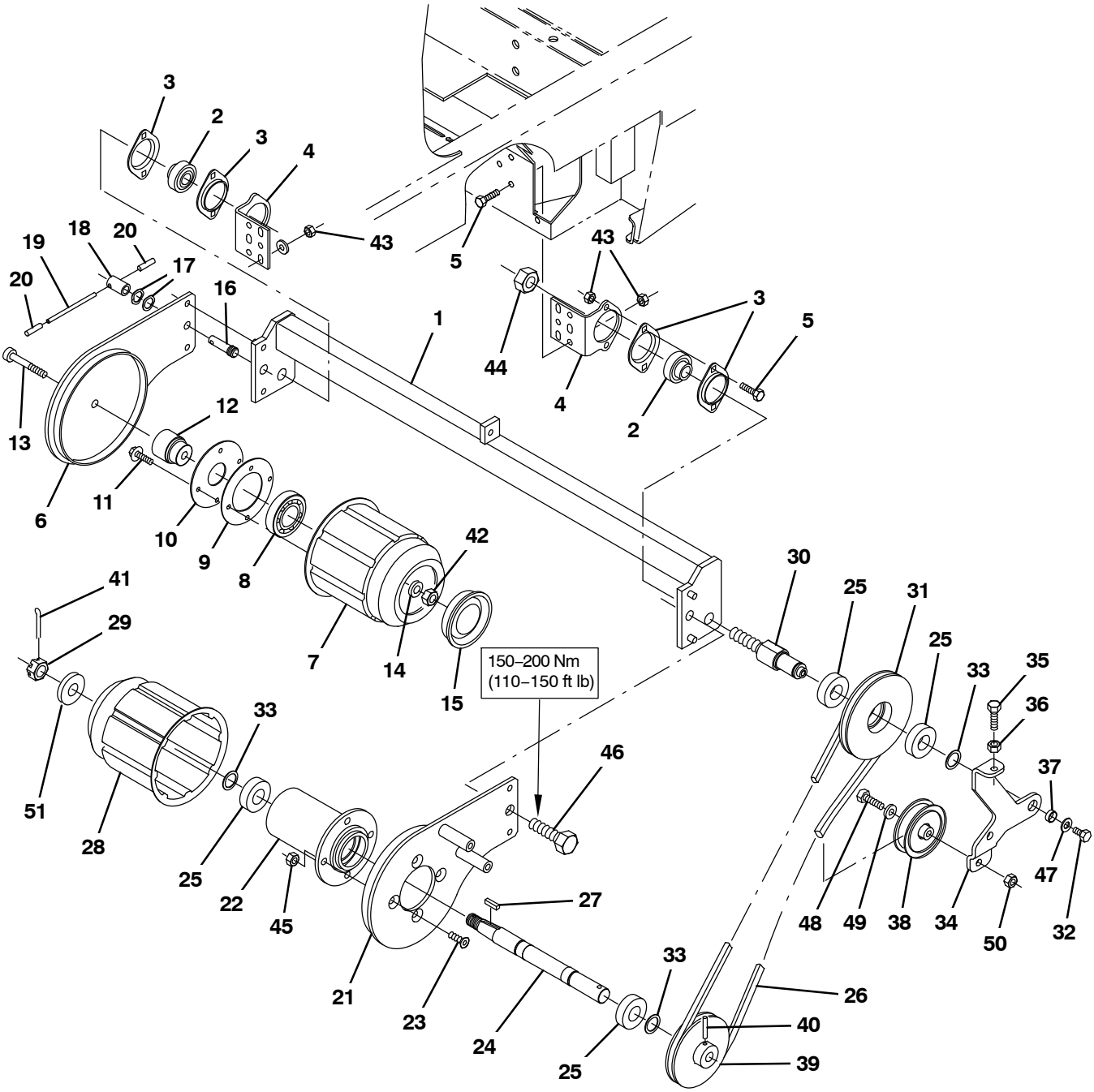

356007– E, NA

Ref.	Part No.	Serial Number	Description	Qty.
1	1048800	(000000–)	Tube Wldt, Torque	1
2	25887	(000000–)	Bearing, W/ Collar, 0.75b 1.85d 1.06w	2
3	35973	(000000–)	Flange, Brg, 1.9id 2h	4
4	1048744	(000000–)	Bracket, Angle, Mtg, Brg	2
5	09740	(000000–)	Screw, Hex, M8 X 1.25 X 20, Ss	10
6	1054045	(000000–)	Arm Wldt, Brush, Main, Idler	1
7	55779	(000000–)	Plug Wldt, Idler, Brush	1
8	24899	(000000–)	Bearing, Ball, 1.38b 2.83d 0.67w	1
9	30252	(000000–)	Disc, 0.08, 04.39d 02.56b, 4/.28h 3.8bc	1

Fig. 18 – Brush Drive Group, Main

Ref.	Part No.	Serial Number	Description	Qty.
10	30253	(000000–)	Disc, 0.06, 04.39d 01.67b, 4/.30h 3.8bc	1
11	1036892	(000000–)	Screw, Hex, M6 X 1.00 X 25, 9.8 Sems	4
12	30251	(000000–)	Shaft, Idler, Plug, Brush	1
13	361555	(000000–)	Screw, Flt, M12 X 1.75 X 80, 10.9	1
14	51564	(000000–)	Washer, Flat, 0.53b 1.75d .12, Stl, Pl	1
15	30255	(000000–)	Cap, Vinyl, 3.28d 0.45l	1
16	360110	(000000–)	Stud, Spcl	1
17	52508	(000000–)	Washer, Wavy, 0.53b 0.81d .09	2
18	360109	(000000–)	Bar, Hex, Stl 0.75, 01.6l .50h Thru	1
19	11631	(000000–)	Pin, Roll, .250d X 3.50l, .250/.256	1
20	360492	(000000–)	Cap, Vinyl, 0.23id, 1.50l	2
21	360108	(000000–)	Arm Wldt, Brush, Main, Drive, Lh	1
22	360104	(000000–)	Housing, Brg, Drive,Brush, 2.5d 2.0b 5.0	1
23	360347	(000000–)	Screw, Flt, Soc, M10 X 1.50 X 25, Ss	4
24	360113	(000000–)	Shaft	1
25	13534	(000000–)	Bearing, Ball, 0.98b 2.05d 0.59w	4
26	360320	(000000–001248)	Belt, V, 31.5l [3v]	1
26	1059569	(001249–)	Belt, V, 31.5l [3v]	1
27	00928	(000000–)	Key, Sq, 0.25 X 0.25, 1.00l	1
28	87631	(000000–)	Plug Wldt, Drive, Brush	1
29	39527	(000000–)	Nut, Hex, Sltd, .75–16	1
30	360116	(000000–)	Shaft, Pivot, Arm, Brush Drive	1
31	1055674	(000000–)	Sheave, 02grv, 05.6/2.9pd 2.0b [3v]	1
32	12273	(000000–)	Screw, Hex, M8 X 1.25 X 20, Nl, Ss	1
33	13766	(000000–)	Ring, Retaining, Ext, 0.98d, Basic	1
34	1049293	(000000–)	Arm, Idler	3
35	06419	(000000–)	Screw, Hex, M10 X 1.50 X 70, Fl, Ss	1
36	07787	(000000–)	Nut, Hex, Std, M10 X 1.50, Ss	1
37	360491	(000000–)	Bushing, Sleeve, 0.63b 0.72d 0.25l	1
38	04186	(000000–)	Sheave, Flat, 3.0d 0.75w 0.67brg	1
39	360115	(000000–)	Sheave, 01grv, 04.7pd 0.97b [3v]	1
40	11398	(000000–)	Pin, Roll, .250d X 2.00l, .250/.256	1
41	08175	(000000–)	Pin, Cotter, .125 X 1.25	4
42	08711	(000000–)	Nut, Hex, Lock, M12 X 1.75, Nl	1
43	08709	(000000–)	Nut, Hex, Lock, M8 X 1.25, Nl	10
44	32987	(000000–)	Nut, Hex, Lock, .75–10, Nl	2
45	41430	(000000–)	Nut, Hex, Lock, M10 X 1.5, Nl	4
46	06977	(000000–)	Screw, Hex, M16 X 2.00 X 20, 8.8	1
47	32491	(000000–)	Washer, Flat, 0.31, Std	4
48	27988	(000000–)	Screw, Hex, .38–16 X 1.50, G5	1
49	32485	(000000–)	Washer, Flat, 0.38, Sae	1
50	36643	(000000–)	Nut, Hex, Lock, .38–16, Nl, Thin	1
51	39350	(000000–)	Washer, Flat, 0.75, Sae	1

Fig. 19 – Brush Drive Motor Group, Main

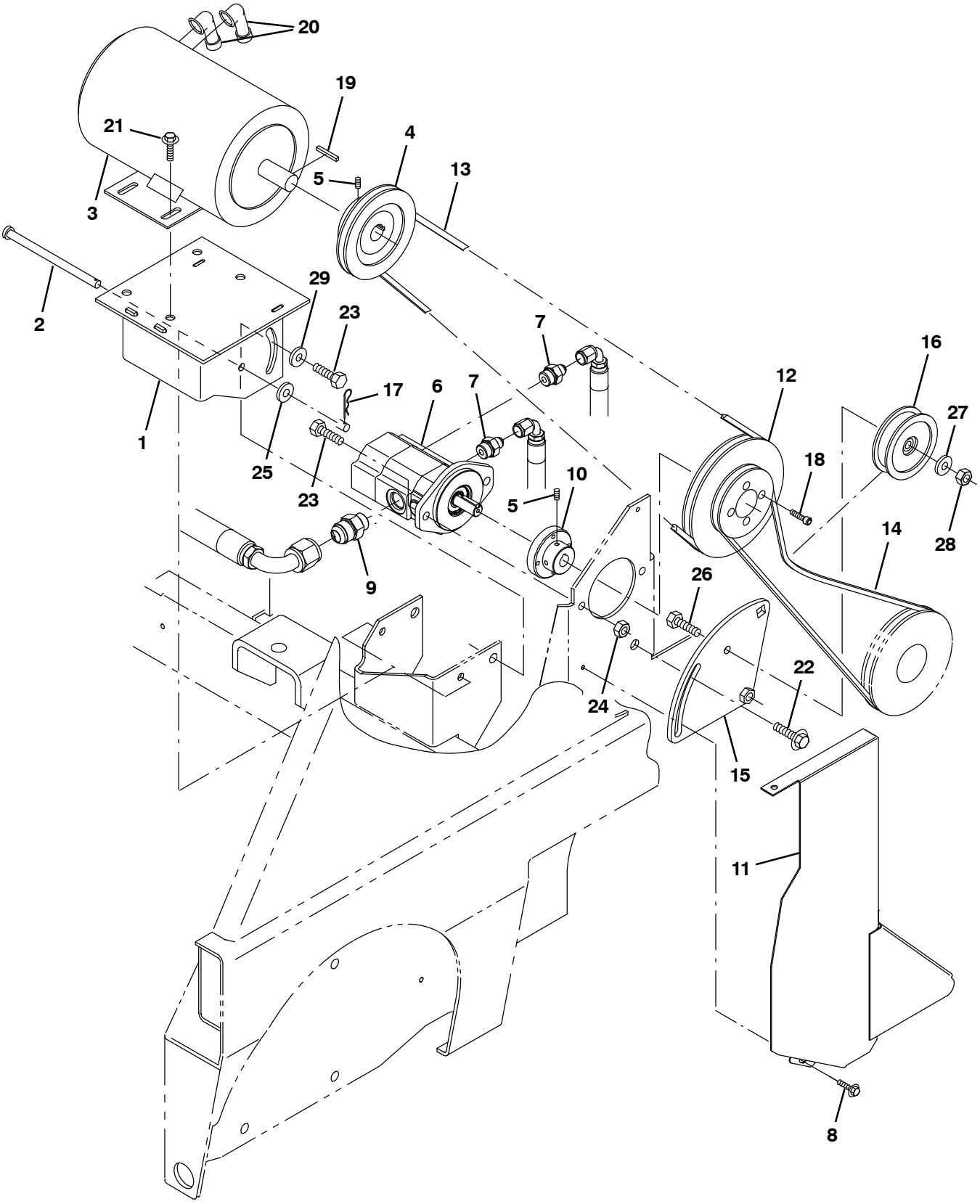

356008– E, NA

Fig. 19 – Brush Drive Motor Group, Main

	Ref.	Part No.	Serial Number	Description	Qty.
	1	1049336	(000000–)	Bracket Wldt, Mtg, Motor	1
	2	49924	(000000–)	Pin, Clevis, 0.37d X 6.12l	1
	3	360175	(000000–)	Motor, Ele, 36vdc 2300rpm 4.00hp (See Breakdowns)	1
	4	361191	(000000–)	Sheave, Step [3V/7M.877]	1
	5	57496	(000000–)	Screw, Set, .25–20 X 0.31, Nl	4
▽	6	1054588	(000000–004402)	Pump, Hyd, Gear, Ext, 2, 00.45 3000, Cw	1
▲		373730	(000000–004402)	Seal Kit, Pump, Hyd	1
	6	1071255	(004403–)	Pump, Hyd, Gear, Ext, 2, 7.0cc 4.5cc	1
	7	52402	(000000–002999)	Fitting, Hyd, Str, Jm06/Om08	2
	7	762438	(003000–)	Fitting, Hyd, Str, Fm06/Om08	2
	8	74455	(000000–)	Screw, Hex, M6 X 1.00 X 12, Fmg	3
	9	06750	(000000–002999)	Fitting, Hyd, Str, Jm12/Om10	1
	9	1071945	(003000–)	Fitting, Hyd, Str, Fm12/Om10	1
	10	360180	(000000–004402)	Hub, Guide, End, Actuator	1
	10	1074197	(004403–)	Hub, Guide, End, Actuator	1
	11	9006984	(000000–)	Guard, Belt, Brush Drive, W/ Label, Na	1
	11	9006983	(000000–)	Guard, Belt, Brush Drive, W/ Label, Jp	1
	12	360179	(000000–)	Sheave, 02grv, 06.5/3.7pd 1.50b [3v]	1
	13	360686	(000000–)	Belt, V, 33.5l [3v]	1
	14	03670	(000000–)	Belt, V, 54.0l [3vl]	1
	15	1049302	(000000–)	Plate, Idler, Adjmt	1
	16	02356	(000000–)	Pulley, Idler W/ Bearing, Plstc	1
	17	08085	(000000–)	Pin, Cotter, Hair, 0.31d .058 Wir	1
	18	01682	(000000–)	Screw, Soc, .25–20 X 1.00, Al	4
	19	00915	(000000–)	Key, Sq, 0.19 X 0.19, 1.38l	1
	20	02076	(000000–)	Boot, 90deg .50id .57id X .84id 1.0l,Blk	2
	21	1037354	(000000–)	Screw, Hex, M8 X 1.25 X 30, 9.8, Sems	4
	22	1037358	(000000–)	Screw, Hex, M10 X 1.50 X 35, 9.8, Sems	2
	23	39283	(000000–)	Screw, Hex, M10 X 1.50 X 25, 8.8	6
	24	41430	(000000–)	Nut, Hex, Lock, M10 X 1.5, Nl	2
	25	32492	(000000–)	Washer, Flat, 0.38, Std	1
	26	27990	(000000–)	Screw, Hex, .38–16 X 2.00, G5	1
	27	32485	(000000–)	Washer, Flat, 0.38, Sae	1
	28	50902	(000000–)	Nut, Hex, Lock, .38–16, Nl	1
	29	41187	(000000–)	Washer, Flat, Belleville, .38	2

Fig. 20 – Brush Lift Group, Side

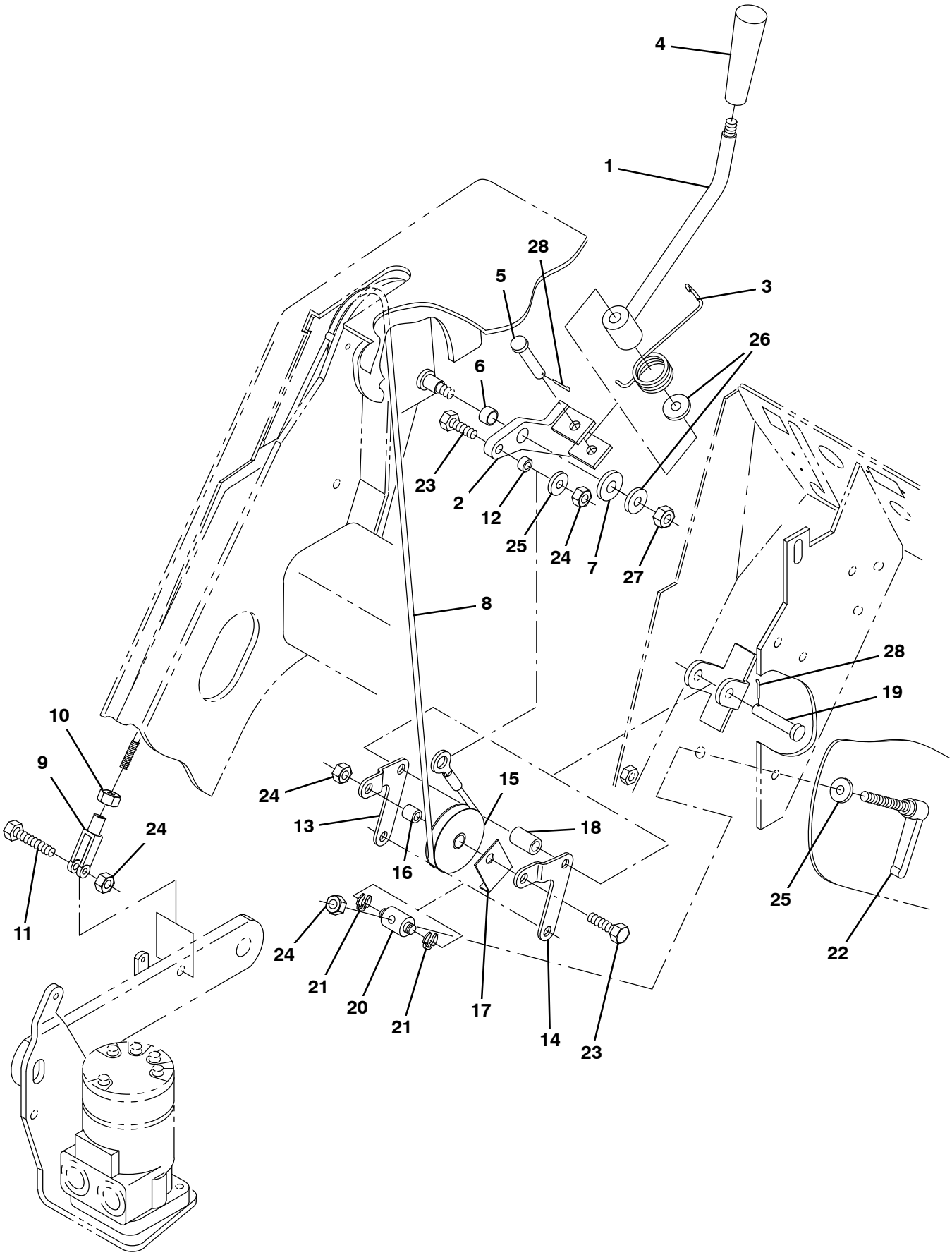

354932 – ALL

Fig. 20 – Brush Lift Group, Side

Ref.	Part No.	Serial Number	Description	Qty.
1	360449	(000000–)	Handle Wldt, Brush, Side	1
2	360417	(000000–)	Arm Wldt, Lift, Brush	1
3	360961	(000000–)	Spring, Tors, 1.03id .11wir 03.0coil	1
4	54995	(000000–)	Knob, 1.12d 3.86l M10 X 1.5, Plstc Tpr]	1
5	51813	(000000–)	Pin, Clevis, 0.37d X 2.12l	1
6	64173	(000000–)	Bushing, Sleeve, 0.50b 0.59d 0.38l, Stl	1
7	39346	(000000–)	Washer, Flat, 0.44, Std	1
8	1047878	(000000–)	Cable, Ss .12d 60.25l .55eye / M6–1.0	1
9	1035826	(000000–)	Clevis, Adj, M6 Pin, M6 X 1.0 Rh, Pl	1
10	41359	(000000–)	Nut, Hex, Std, M6 X 1.00, 8	1
11	06957	(000000–)	Screw, Hex, M8 X 1.25 X 60, 8.8	1
12	360801	(000000–)	Sleeve, 0.32b 0.50d 0.3l, 2cham, Ss	1
13	360410	(000000–)	Bellcrank, Lift, Brush, Side, Rh	1
14	360411	(000000–)	Bellcrank, Lift, Brush, Side, Lh	1
15	369781	(000000–)	Pulley, Cable, 1.5d Nyl	1
16	222460	(000000–)	Sleeve, P/M, 0.32b 0.50d 0.5l [430ss]	1
17	54400	(000000–)	Bracket, Angle, Keeper, Cable	1
18	360451	(000000–)	Tube, 0.42id 0.62od 01.0l, Stl, Pl	1
19	29584	(000000–)	Pin, Clevis, 0.37d X 2.00l	1
20	71126	(000000–)	Block, Adj, Pivot	1
21	12364	(000000–)	Ring, Retaining, Ext, 0.38d, [Klipring]	2
22	360414	(000000–)	Lever, Adj, Metal	1
23	76570	(000000–)	Screw, Hex, M8 X 1.25 X 30, 8.8	2
24	08709	(000000–)	Nut, Hex, Lock, M8 X 1.25, Nl	4
25	32491	(000000–)	Washer, Flat, 0.31, Std	2
26	32492	(000000–)	Washer, Flat, 0.38, Std	2
27	41430	(000000–)	Nut, Hex, Lock, M10 X 1.5, Nl	1
28	44906	(000000–)	Pin, Cotter, Hair, 0.38d .093 Wir	2

Fig. 21 – Brush Motor and Pivot Group, Side

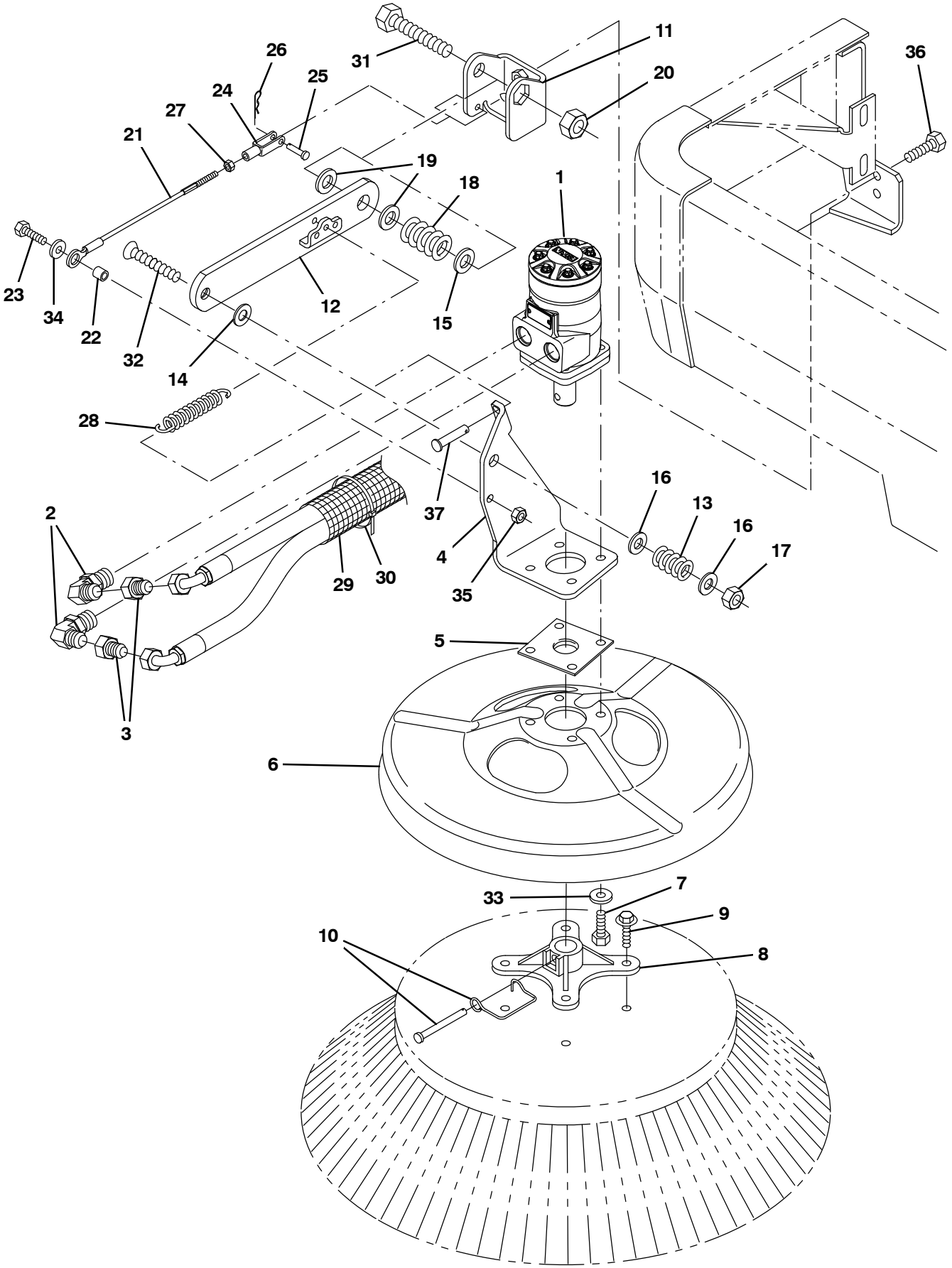

354933 – E, NA

Fig. 21 – Brush Motor and Pivot Group, Side

	Ref.	Part No.	Serial Number	Description	Qty.
	1	361026	(000000–002395)	Motor, Hyd, Gear, Int 08.9 Bi–Dir 1500 (See Break-downs)	1
▽	1	1068803	(002396–)	Motor, Hyd, Gear, Int 08.9 Bi–Dir 1500	1
▲		22615	(002396–)	Seal Kit, Motor [Cl]	1
	2	56821	(000000–002999)	Fitting, Hyd, E90, Jm08/Om10	2
	2	767411	(003000–)	Fitting, Hyd, E90, Fm08/Om10	2
	3	47753	(000000–002999)	Fitting, Hyd, Str, Jf08/Jm06	2
	3	762458	(003000–)	Fitting, Hyd, Str, Ff08/Fm06	2
	4	1046246	(000000–)	Bracket, Mtg, Motor, Rh	1
	5	16082	(000000–)	Guard, String, Motor, Brush	1
	6	1054256	(000000–)	Guard, Brush	1
	7	46559	(000000–)	Screw, Hex, .38–16 X 1.25, Nl	4
	8	47501	(000000–)	Hub, Adapter, Brush, 1.00b	1
	9	39396	(000000–)	Screw, Hex, .31–12 X 1.50, Fmg [Ab]	4
	10	84581	(000000–)	Pin Assy, Side Brush W/ Clip	1
	11	1037427	(000000–)	Bracket, Arm, Side Brush	1
	12	1037485	(000000–)	Arm Wldt, Lift, Rh	1
	13	360357	(000000–)	Spring, Dsl, 1.00od 0.50id 1.25l	1
	14	59633	(000000–)	Washer, Thrust, 0.53b 1.00d 0.03w[Fbrgl]	1
	15	15331	(000000–)	Washer, Flat, 0.62, Sae	1
	16	32486	(000000–)	Washer Flat,0.50,Sae	2
	17	86029	(000000–)	Nut, Hex, Flexlock, .50–13, Thin	1
	18	360081	(000000–)	Spring, Dsl, 1.25od 0.62id 1.80l	1
	19	64425	(000000–)	Washer, Thrust, 0.61b 1.25d .06, Fgl	2
	20	33342	(000000–)	Nut, Hex, Lock, M16 X 2.00, Nl	1
	21	1048311	(000000–)	Cable, Ss .19d 008.5l .55eye / M6–1.0	1
	22	360801	(000000–)	Sleeve, 0.32b 0.50d 0.3l, 2cham, Ss	1
	23	09010	(000000–)	Screw, Hex, M8 X 1.25 X 25, Ss	1
	24	1035826	(000000–)	Clevis, Adj, M6 Pin, M6 X 1.0 Rh, Pl	1
	25	14605	(000000–)	Pin, Clevis, 0.25d X 0.75l	1
	26	08085	(000000–)	Pin, Cotter, Hair, 0.31d .058 Wir	1
	27	07785	(000000–)	Nut, Hex, Std, M6 X 1.00, Ss	1
	28	29499	(000000–)	Spring, Extn, 0.75od 0.11wir 04.5l	1
	29	31646	(000000–)	Sleeve, Nyl, 1.63id 25.0l	1
	30	49266	(000000–)	Tie, Cable, Nyl, 07.3l .19w 1.8 Max D	2
	31	06988	(000000–)	Screw, Hex, M16 X 2.00 X 90, 8.8	1
	32	27108	(000000–)	Screw, Flt, Soc, .50–13 X 2.50, Al	1
	33	32492	(000000–)	Washer, Flat, 0.38, Std	4
	34	01685	(000000–)	Washer, Flat, 0.38b 0.88d .08, Ss	1
	35	08713	(000000–)	Nut, Hex, Lock, M8 X 1.25, Nl, Ss	1
	36	09028	(000000–)	Screw, Hex, M10 X 1.50 X 25, Ss	2
	37	41305	(000000–)	Pin, Clevis, 0.37d X 0.75l	1

Fig. 22 – Vacuum Fan Control Group

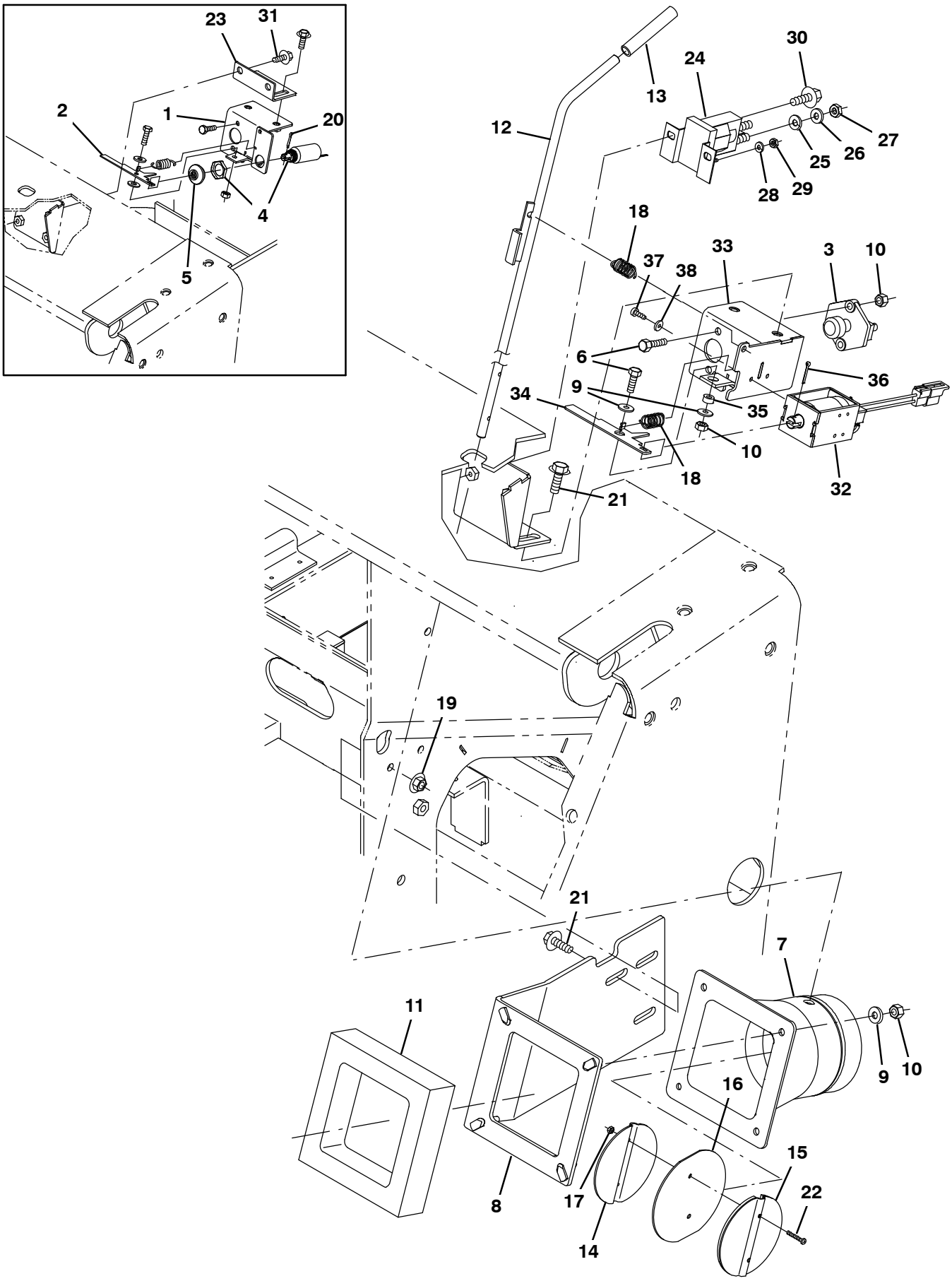

356009– E, NA

Fig. 22 – Vacuum Fan Control Group

Ref.	Part No.	Serial Number	Description	Qty.
1	1057734	(000000–001286)	Bracket, Switch, Shaker	1
2	375019	(000000–001286)	Lever, Vacfan	1
3	44078	(000000–)	Switch, Push, Spst, No	1
4	9007391	(000000–001286)	Solenoid Kit, 36vdc, Replmt [Thrmsentry]	1
5	87707	(000000–001286)	Bellows, Solenoid, .75–16, 1.5l	1
6	06943	(000000–)	Screw, Hex, M6 X 1.00 X 20, 8.8	3
7	1048565	(000000–)	Tube, Transition, Valve, Ev	1
8	1045627	(000000–)	Bracket, Inlet, Vacfan	1
9	32483	(000000–)	Washer, Flat, 0.25, Sae	6
10	08708	(000000–)	Nut, Hex, Lock, M6 X 1.00, Nl	7
11	1044357	(000000–)	Seal, Inlet, Vacuum	1
12	1046590	(000000–)	Rod Wldt, Damper	1
13	360981	(000000–)	Grip, Vyl	1
14	1052653	(000000–)	Plate Wldt, Damper	1
15	1052652	(000000–)	Damper, Inlet	1
16	87983	(000000–)	Seal, Rbr, Damper, 0.06th, 04.1d	1
17	75939	(000000–)	Nut, Hex, Lock, #06–32, Nl	2
18	09087	(000000–)	Spring, Extn, 0.96od 0.05wir 01.4l	2
19	07791	(000000–)	Nut, Hex, Flng, M8 X 1.25	2
20	08346	(000000–001286)	Pin, Cotter, .125 X 0.75	1
21	1037354	(000000–)	Screw, Hex, M8 X 1.25 X 30, 9.8, Sems	7
22	25005	(000000–)	Screw, Pan, Phl, 06–32 X 1.00, G1	2
23	1057735	(000000–001291)	Bracket, Switch, Shaker	1
24	386810	(000000–)	Contactor, 36Vdc, 100A, Sp, No	1
25	32984	(000000–)	Washer, Lock, Int, 0.31	2
26	32490	(000000–)	Washer, Flat, 0.25, Std	2
27	20170	(000000–)	Nut, Hex, Jam, .31–24	2
28	07514	(000000–)	Washer, Lock, Int, 10, Ss	2
29	01713	(000000–)	Nut, Hex, Std, 10–32, 2	2
30	1036892	(000000–)	Screw, Hex, M6 X 1.00 X 25, 9.8, Sems	2
31	1037354	(000000–001291)	Screw, Hex, M8 X 1.25 X 30, 9.8, Sems	2
32	1060444	(001287–)	Solenoid Assy, Pull, 36vdc	1
33	1060334	(001287–)	Bracket Wldt, Switch, Shakr	1
34	1060331	(001287–)	Lever, Vacfan	1
35	140147	(001287–)	Sleeve, P/M, 0.25b 0.44d 0.2l, Pl	1
36	08179	(001287–)	Pin, Cotter, .094 X 1.00	1
37	32515	(001287–)	Screw, Pan, Phl, 08–32 X 0.38, G1	2
38	19065	(001287–)	Washer, Flat, 08	2

Fig. 23 – Vacuum Fan Group

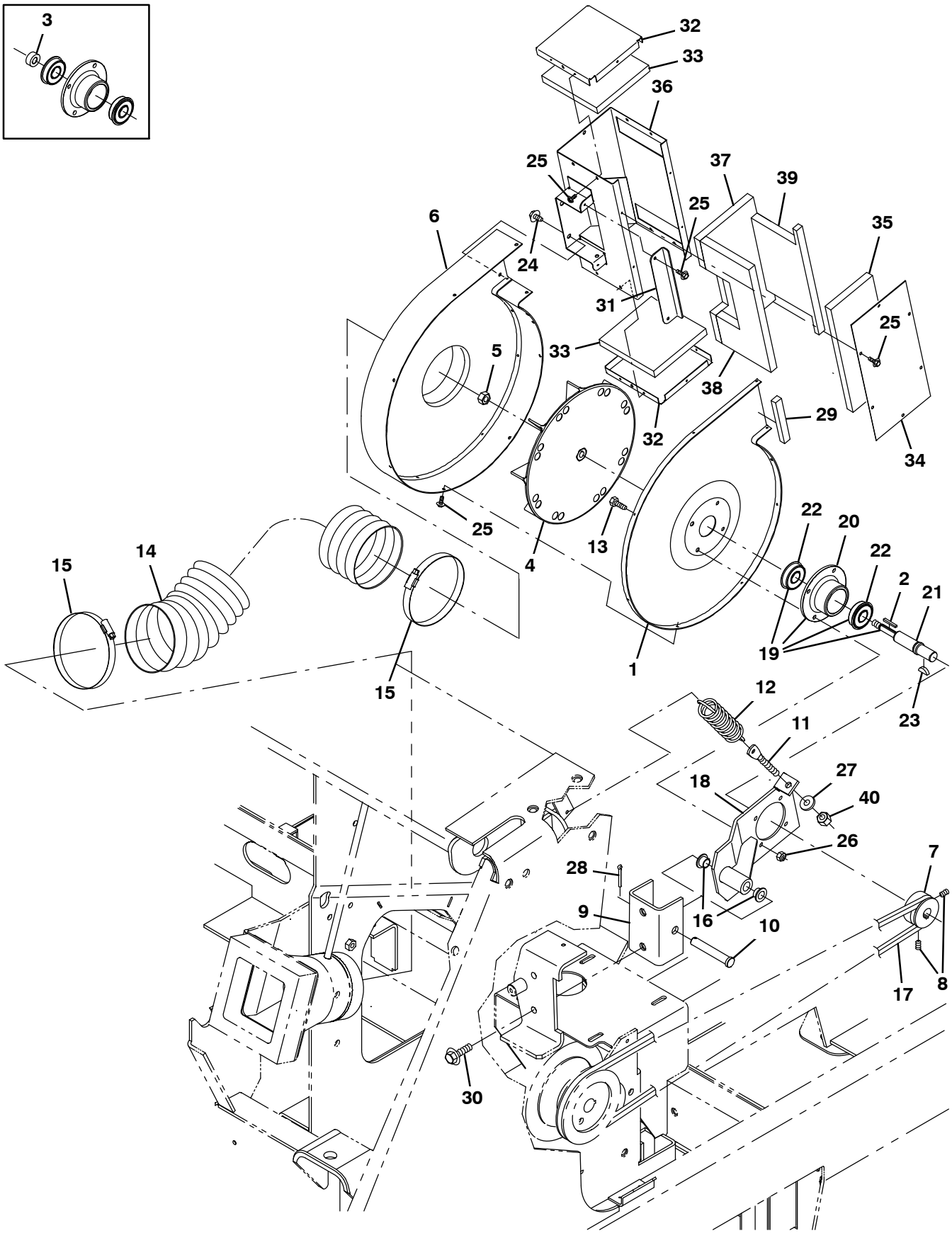

356013 – E, NA

Fig. 23 – Vacuum Fan Group

	Ref.	Part No.	Serial Number	Description	Qty.
	1	1052763	(000000–)	Housing, Fan, Rear, Impeller	1
	2	00954	(000000–)	Key, Sq, 0.12 X 0.12, 1.00l	1
	3	10362	(000000–001456)	Tube, 0.38id 0.81od 00.4l, Stl	1
	4	74454	(000000–)	Impeller, 9.00d X 1.40w X 0.376b	1
	5	87299	(000000–001456)	Nut, Hex, Flexlock, .31–24, Thin	1
	5	71244	(001457–)	Nut, Hex, Flexlock, .38–24	1
	6	1052644	(000000–)	Housing Wldt, Fan	1
	7	360406	(000000–)	Sheave, 01grv, 01.9pd 0.62b [07m]	1
	8	39332	(000000–)	Screw, Set, Soc, .25–20 X 0.75, Al	2
	9	1052646	(000000–)	Channel, .19, 2.8w 2.0 04.0l, 2/ M10	1
	10	23683	(000000–)	Pin, Clevis, 0.50d X 3.00l	1
	11	11843	(000000–)	Bolt, Eye, .38–16 X 3.22, 0.28 Eye	1
	12	33372	(000000–)	Spring, Extn, 1.25od 0.15wir 06.0l	1
	13	06943	(000000–)	Screw, Hex, M6 X 1.00 X 20, 8.8	4
	14	1047637	(000000–)	Hose, Flex, Vacuum, 04.0d, 021.0l	1
	15	23498	(000000–)	Clamp, Hose, Wormdrive, 3.56–4.50d, .50w	2
	16	360917	(000000–)	Bushing, Flng, 0.50b 0.59d 0.38l	2
	17	360753	(000000–)	Belt, V, 32.2l [07m]	1
	18	1052647	(000000–)	Bracket Wldt, Mtg, Fan	1
▽	19	387387	(000000–)	Shaft Assy, Brg	1
▲	20	41561	(000000–)	Housing, Flng, Brg	1
▲	21	387376	(000000–)	Shaft, Impeller	1
▲	22	32525	(000000–)	Bearing, Ball, 0.67b 1.57d 0.47w	2
	23	00500–10	(000000–)	Key, Woodruff, 0.19 0.75 [Asa0606]	1
	24	74455	(000000–)	Screw, Hex, M6 X 1.00 X 12, Fmg	2
	25	87838	(000000–)	Screw, Hex, 06–20 X 0.50, Fmg/Ab, Pl	27
	26	08708	(000000–)	Nut, Hex, Lock, M6 X 1.00, Nl	4
	27	32492	(000000–)	Washer, Flat, 0.38, Std	1
	28	08175	(000000–)	Pin, Cotter, .125 X 1.25	1
	29	361327	(000000–)	Seal, Ure, 0.50, 0.75w 04.0l Adh	1
	30	1037358	(000000–)	Screw, Hex, M10 X 1.50 X 35, 9.8, Sems	2
	31	1053393	(000000–)	Angle, Mtg, Muffler, Vacfan	1
	32	1052650	(000000–)	Panel, Muffler, Fan	2
	33	361993	(000000–)	Insulation, Acstc, 0.5, 04.6 X 04.4	2
	34	1052651	(000000–)	Plate, Cover, Muffler	1
	35	361937	(000000–)	Insulation, Acstc, 0.5, 08.6 X 03.6	1
	36	1052649	(000000–)	Muffler Wldt, Fan	1
	37	361995	(000000–)	Insulation, Acstc, 0.5, 08.6 X 04.6 Ntch	1
	38	361936	(000000–)	Insulation, Acstc, 0.5, 08.6 X 04.2 Ntch	1
	39	361994	(000000–)	Insulation, Acstc, 0.5, 08.7 X 04.2 Ntch	1
	40	50902	(000000–)	Nut, Hex, Lock, .38–16, Nl	1

Fig. 24 – Hopper Lift Arms Group

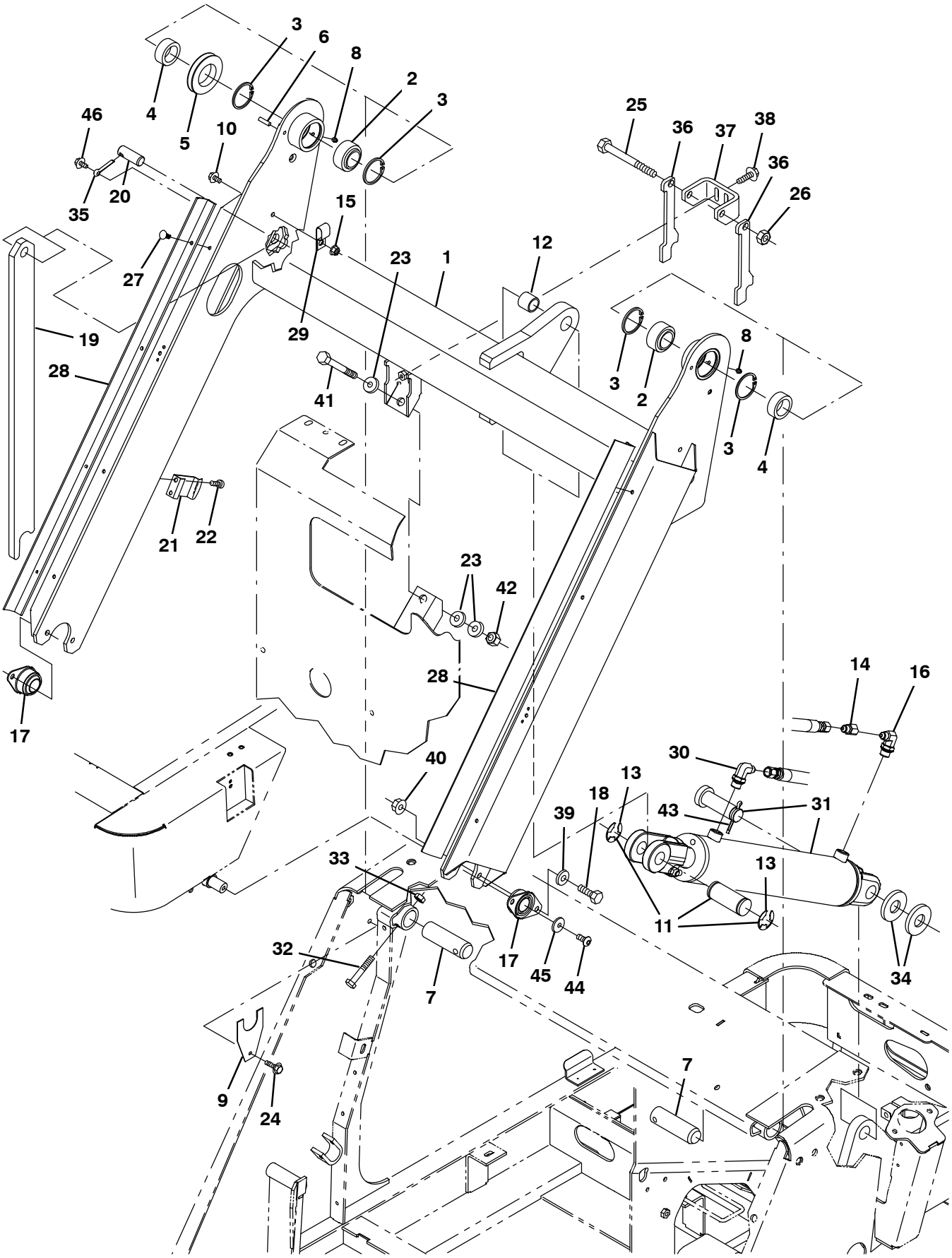

356012 – E, NA

Fig. 24 – Hopper Lift Arms Group

	Ref.	Part No.	Serial Number	Description	Qty.
	1	9006900	(000000–)	Arm, Lift, Hppr, W/ Label [S20] Na	1
	1	9006902	(000000–)	Arm, Lift, Hppr, W/ Label [S20] Jp	1
	2	42120–1	(000000–)	Bearing, Self Align, 1.25b 2.00d	2
	3	59542	(000000–)	Ring, Retaining, Int, 2.00d	4
	4	360455	(000000–)	Sleeve, P/M, 1.25b 1.75d 0.7l [430ss]	2
	5	360077	(000000–)	Pulley, Cable, 3.0d 1.76b, .25d Cable	1
	6	17404	(000000–)	Pin, Roll, .250d X 0.75l, .250/.256	1
	7	360064	(000000–)	Pin, 1.25d 04.0l, 1/.34h, Stl	2
	8	07259	(000000–)	Fitting, Grease, Str Pm04 .47l	2
	9	360768	(000000–)	Plate, Spacer, Lift Arm	8
	10	1020341	(000000–)	Screw, Hex, M8 X 1.25 X 20, Ss, Sems	1
▽	11	361295	(000000–)	Pin Assy, Clevis, Hppr Lift	1
▲	12	35529	(000000–)	Bushing, Sleeve, 1.00b 1.13d 0.99l, Fgl	1
▲	13	23788	(000000–)	Ring, Retaining, Ext, 0.98d, [E–Ring]	2
	14	16455	(000000–002999)	Fitting, Hyd, Rst, Jf04/Jm04, .047	1
	14	1067059	(003000–)	Fitting, Hyd, Rst, Fm04/Of04, .047	1
	15	07791	(000000–)	Nut, Hex, Flng, M8 X 1.25	1
	16	47638	(000000–002999)	Fitting, Hyd, E90, Jm04/Om06	1
	16	762425	(003000–)	Fitting, Hyd, E90, Fm04/Om06	1
	17	87216	(000000–)	Bearing, Flng, 2hole, 1.00b	2
	18	09028	(000000–)	Screw, Hex, M10 X 1.50 X 25, Ss	4
	19	9007372	(000000–)	Arm, Safety, Hppr, W/ Label [S20]	1
	19	9007374	(000000–)	Arm, Safety, Hppr, W/ Label, Tj [S20]	1
	20	360386	(000000–)	Pin, 0.75d 02.0l, 1/.31h, Stl	1
	21	87244	(000000–)	Clip, Spring, Prop Arm	1
	22	48732	(000000–)	Screw, Pan, Phl, M6 X 1.00 X 10, Ss	2
	23	36328	(000000–)	Washer, Flat, Belleville, .50	3
	24	12459	(000000–)	Screw, Hex, M6 X 1.00 X 20, Fmg	2
	25	12138	(000000–)	Screw, Hex, M12 X 1.75 X 120, 8.8	1
	26	08711	(000000–)	Nut, Hex, Lock, M12 X 1.75, Nl	1
	27	21168	(000000–)	Plug, Hole, Rnd, 0.25h 0.8l, Brb, Nyl	8
	28	1053746	(000000–)	Seal, Cover	2
	29	67366	(000000–)	Clamp, Cable, Stl, 1.0x2.0x0.62w, 1hole	1
	30	56820	(000000–002999)	Fitting, Hyd, E90, Jm06/Om06	1
	30	762432	(003000–)	Fitting, Hyd, E90, Fm06/Om06	1
▽	31	1026362	(000000–)	Cylinder, Hyd, 2.5b 24.8l 13.50strk 3000	1
▲		373731	(000000–)	Seal Kit, Cyl, Hyd	1
	32	06957	(000000–)	Screw, Hex, M8 X 1.25 X 60, 8.8	2
	33	08709	(000000–)	Nut, Hex, Lock, M8 X 1.25, Nl	2
	34	32598	(000000–)	Washer, Flat, 1.02b 1.75d .12, Stl	2
	35	08361	(000000–)	Pin, Cotter, .250 X 1.25	1
	36	1052203	(000000–)	Plate, Mtg, Pin	2
	37	1052231	(000000–)	Channel, Mtg, Lock	1
	38	1037355	(000000–)	Screw, Hex, M8 X 1.25 X 35, 9.8, Sems	2
	39	32492	(000000–)	Washer, Flat, 0.38, Std	4
	40	07792	(000000–)	Nut, Hex, Flng, M10 X 1.50	4
	41	34877	(000000–)	Screw, Hex, M10 X 1.50 X 100, 8.8	1
	42	41430	(000000–)	Nut, Hex, Lock, M10 X 1.5, Nl	1
	43	08298	(000000–)	Pin, Cotter, .187 X 1.75	1
	44	17284	(001071–)	Screw, Btn, M8 X 1.25 X 16, Ss	2
	45	30013	(001071–)	Washer, Flat, 0.31, Fendr	2

Fig. 25 – Hopper Group, Plastic

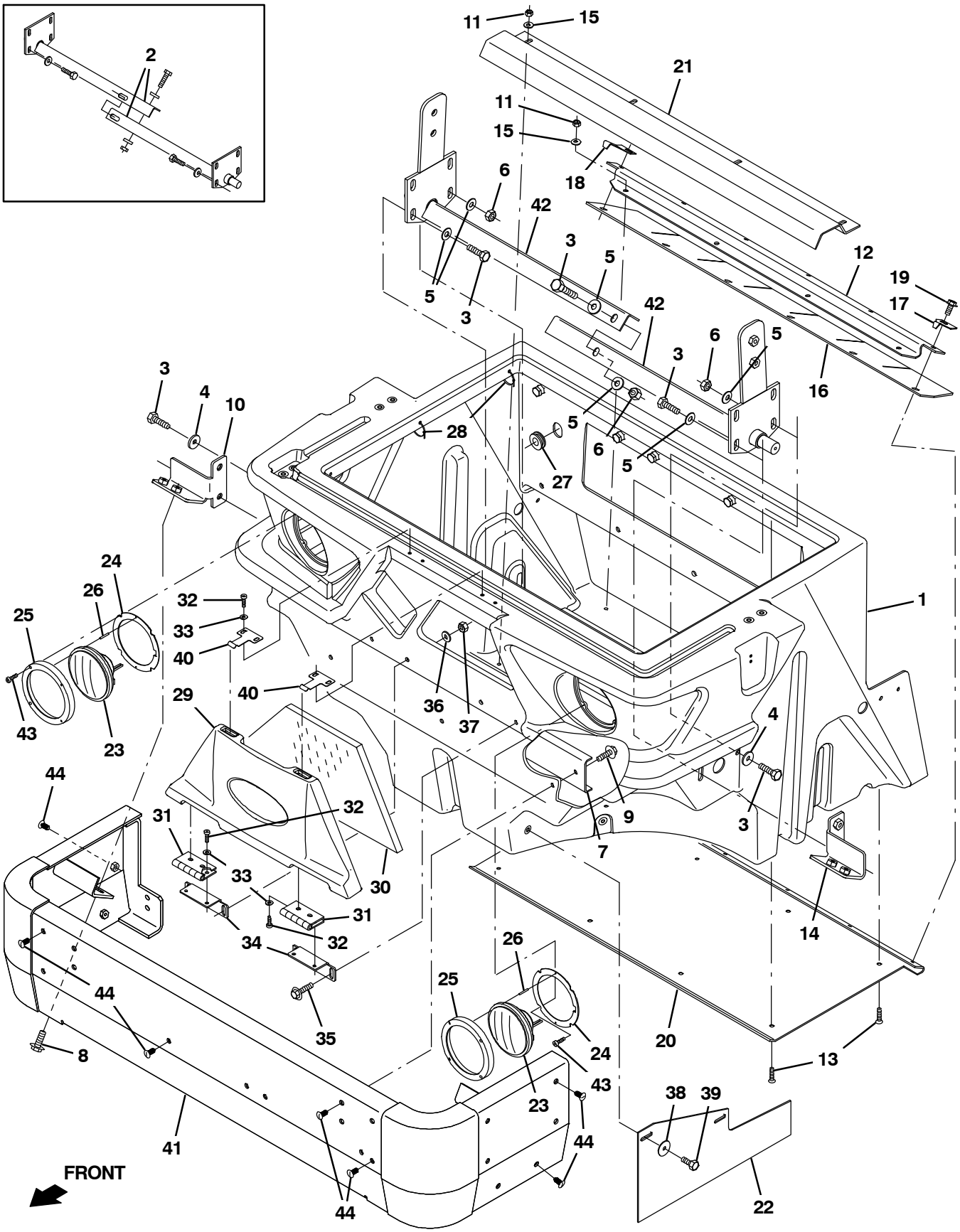

354921– E, NA

Fig. 25 –Hopper Group, Plastic

Ref.	Part No.	Serial Number	Description	Qty.
1	1043490	(000000–)	Hopper [S20]	1
2	1048990	(000000–001070)	Plate Wldt, Pivot	2
3	12317	(000000–)	Screw, Hex, M10 X 1.50 X 30, Ss	10
4	1014563	(000000–)	Washer, Flat, 0.40b 1.12d .12, Ss	4
5	32492	(000000–)	Washer, Flat, 0.38, Std	12
6	41430	(000000–)	Nut, Hex, Lock, M10 X 1.5, Nl	6
7	360602	(000000–)	Plate, Sppt, Bmpr	1
8	1037358	(000000–)	Screw, Hex, M10 X 1.50 X 35, 9.8, Sems	4
9	1037355	(000000–)	Screw, Hex, M8 X 1.25 X 35, 9.8, Sems	4
10	1049253	(000000–)	Bracket, Mtg, Bmpr, Front, Rh	1
11	08708	(000000–)	Nut, Hex, Lock, M6 X 1.00, Nl	8
12	1052452	(000000–)	Strip, Retainer, Hppr Lip	1
13	06415	(000000–)	Screw, Flt, Soc, M6 X 1.00 X 25, 10.9	12
14	1049263	(000000–)	Bracket, Mtg, Bmpr, Front, Lh	1
15	32490	(000000–)	Washer, Flat, 0.25, Std	8
16	360327	(000000–)	Skirt, Neo, .12, 05.20w 36.10l, 06/ Sl	1
17	360893	(000000–)	Deflector, Hppr, Lh	1
18	360894	(000000–)	Deflector, Hppr, Rh	2
19	361339	(000000–)	Screw, Hex, M6 X 1.00 X 16, Fmg	6
20	1052454	(000000–)	Plate, Wear	1
21	1048732	(000000–)	Bracket, Angle, Hppr Bottom Stiffener	1
22	1047575	(000000–)	Skirt, Neo, .12 2ply, Dust–Cntrl	1
23	1048488	(000000–003580)	Headlight , 36v	2
23	1048096	(000000–003580)	Headlight, 36vdc, Led, UL	2
23	1071990	(003581–)	Headlight, 12–48vdc, 10watt, Rnd Led, Ul	2
24	1048116	(000000–)	Plate, Retainer, Headlight	2
25	1049015	(000000–)	Plate, Sppt, Headlight	2
26	46029	(000000–)	Pin, Roll, .094d X 0.87l, .094/.097	8
27	10632–18	(000000–)	Grommet, Rbr, 0.69id, F/1.0h, .25 Matl	1
28	49266	(000000–)	Tie, Cable, Nyl, 07.3l .19w 1.8 Max D	8
29	1044254	(000000–)	Door, Access, Hppr	1
30	1045365	(000000–)	Seal, Door, Access	1
31	1049102	(000000–)	Hinge, .25pin .12 3.0w 03.0l, 4/0.28sl	2
32	09200	(000000–)	Screw, Pan, Phl, M5 X 0.80 X 12, Ss	12
33	19066	(000000–)	Washer, Flat, 10	12
34	1044907	(000000–)	Bracket, Mtg, Hinge	2
35	1037354	(000000–)	Screw, Hex, M8 X 1.25 X 30, 9.8, Sems	4
36	32491	(000000–)	Washer, Flat, 0.31, Std	4
37	08709	(000000–)	Nut, Hex, Lock, M8 X 1.25, Nl	4
38	30013	(000000–)	Washer, Flat, 0.31, Fendr	2
39	49826	(000000–)	Screw, Hex, M8 X 1.25 X 16, Nl, Ss	2
40	1044900	(000000–)	Latch, Door	2
41	1042875	(000000–)	Bumper Wldt, Front	1
42	1076304	(001071–)	Plate Wldt, Pivot	2
43	1053318	(000000–)	Screw, Pan, Phl, 08–16 X 1.00, F/ Plstc	8
44	21168	(000000–)	Plug, Hole, Rnd, 0.25h 0.8l, Brb, Nyl	24

Fig. 26 – Hopper Cover Group

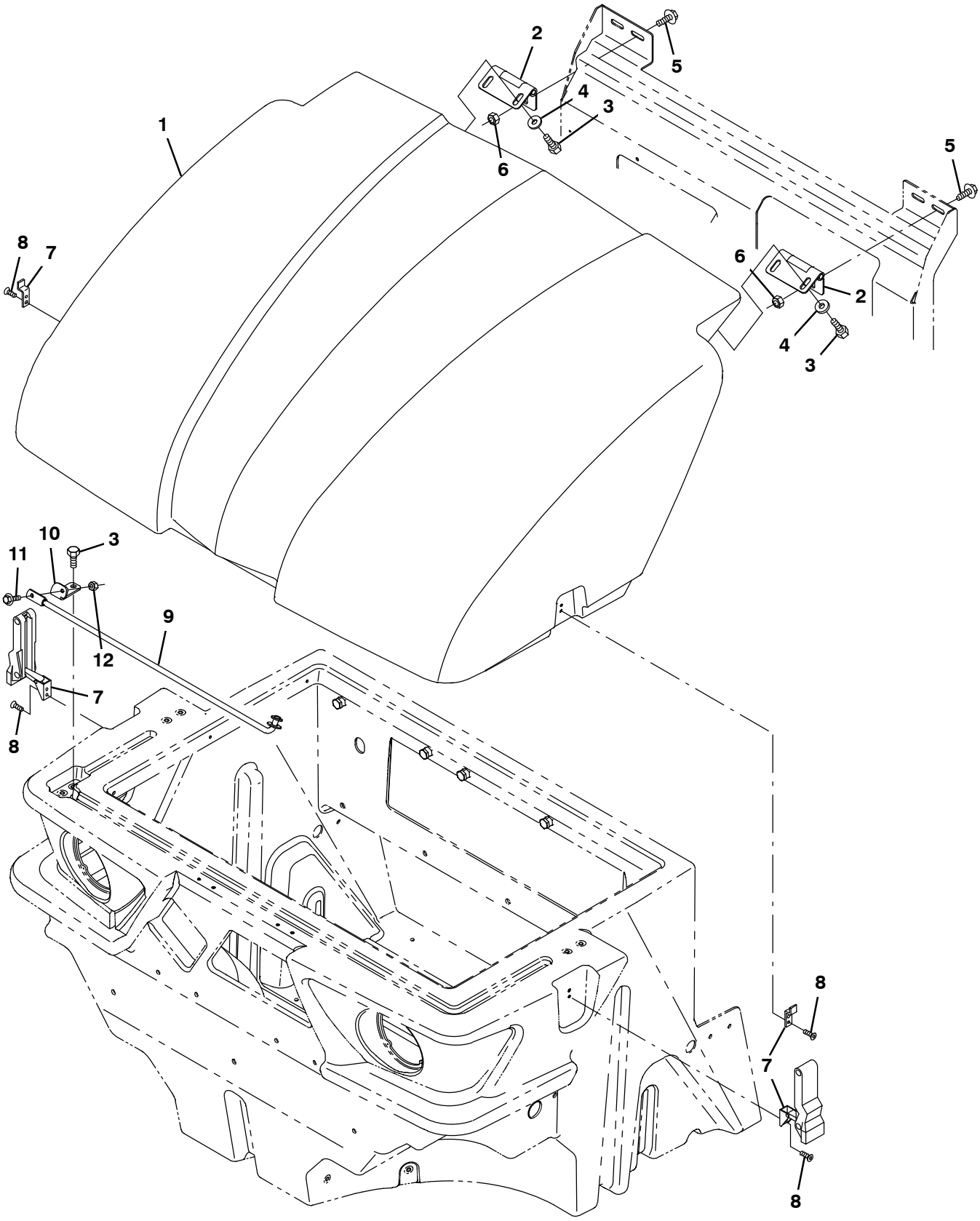

354920 – ALL

Fig. 26 – Hopper Cover Group

Ref.	Part No.	Serial Number	Description	Qty.
1	1043938	(000000–)	Cover, Hppr	1
2	1044214	(000000–)	Hinge, .38pin .12 3.5w 4.0l [Oal]	2
3	16735	(000000–)	Screw, Hex, M8 X 1.25 X 16, 8.8	6
4	32491	(000000–)	Washer, Flat, 0.31, Std	8
5	1037346	(000000–)	Screw, Hex, M8 X 1.25 X 25, 9.8, Sems	4
6	07791	(000000–)	Nut, Hex, Flng, M8 X 1.25	4
7	360824	(000000–)	Latch	2
8	09200	(000000–)	Screw, Pan, Phl, M5 X 0.80 X 12, Ss	8
9	1045434	(000000–)	Rod Wldt, Safety, Hppr Cover	1
10	1045423	(000000–)	Bracket, Rod, Safety	1
11	1036892	(000000–)	Screw, Hex, M6 X 1.00 X 25, 9.8, Sems	1
12	08708	(000000–)	Nut, Hex, Lock, M6 X 1.00, Nl	1

Fig. 27 – Hopper Support Group (001071–)

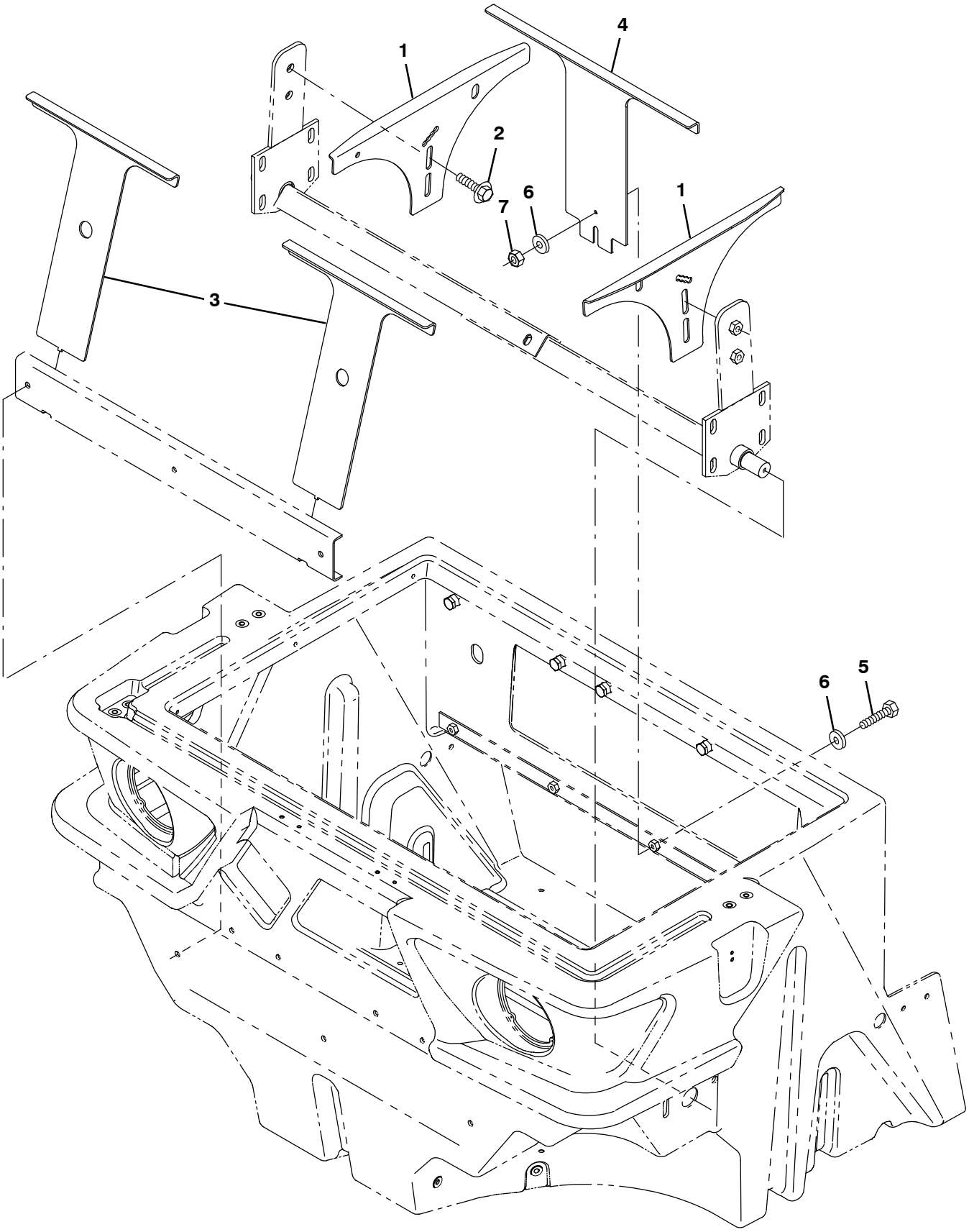

356082 – ALL, NA

Fig. 27 – Hopper Support Group (001071–)

Ref.	Part No.	Serial Number	Description	Qty.
1	1060278	(001071–)	Support, Hppr, Lip, Side	2
2	1037358	(001071–)	Screw, Hex, M10 X 1.50 X 35, 9.8, Sems	4
3	1059119	(001071–)	Support, Hppr, Lip, Front	2
4	1059158	(001071–)	Support, Hppr, Lip, Back	1
5	04375	(001071–)	Screw, Hex, M8 X 1.25 X 40, 8.8, Fl	1
6	32491	(001071–)	Washer, Flat, 0.31, Std	2
7	08709	(001071–)	Nut, Hex, Lock, M8 X 1.25, Nl	1

Fig. 28 – Hopper Dump Door Group

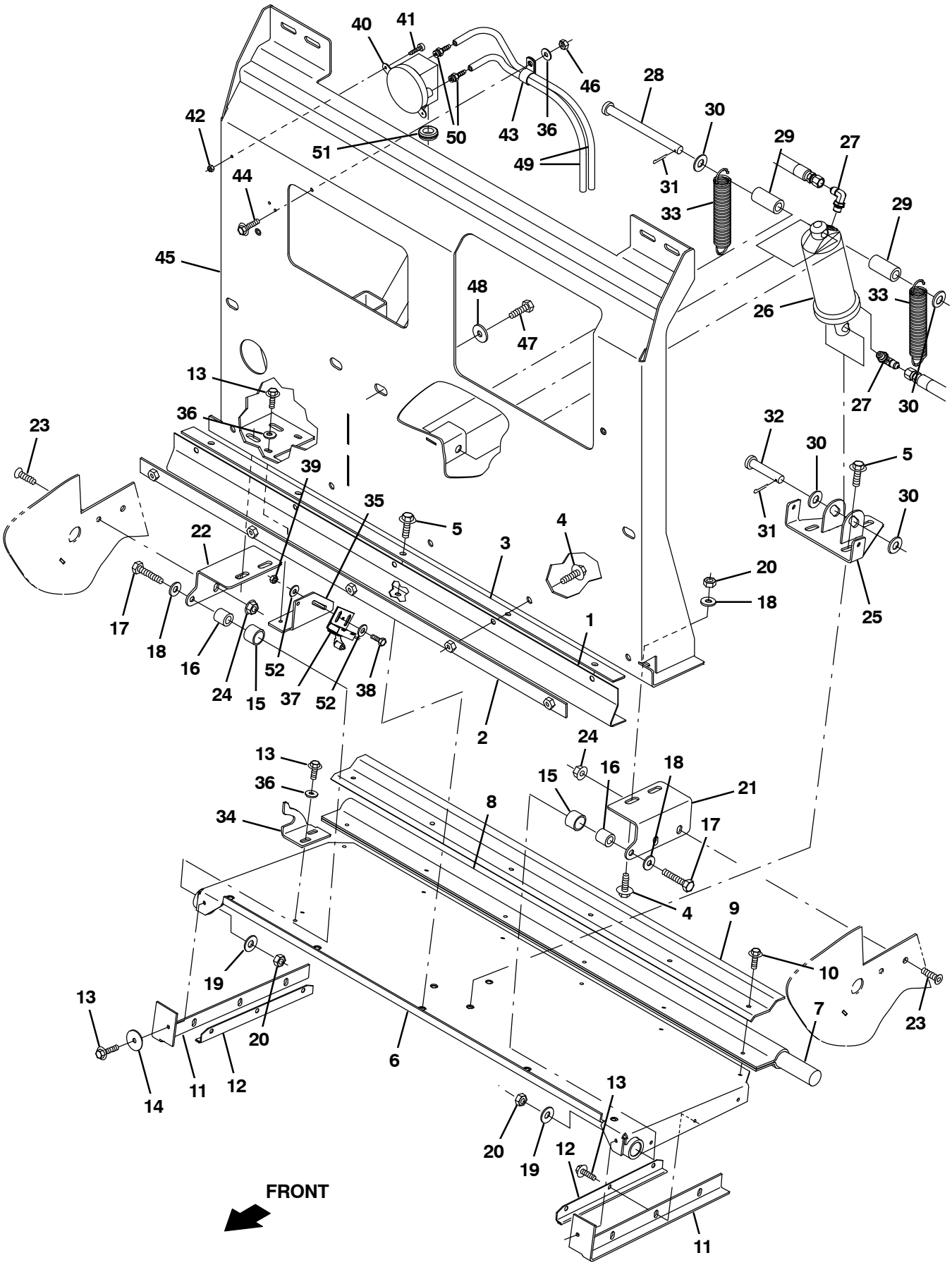

354922– E, NA

Fig. 28 – Hopper Dump Door Group

Ref.	Part No.	Serial Number	Description	Qty.
1	360336	(000000–)	Seal	1
2	1047280	(000000–)	Strip Wldt, Seal, Door	1
3	1051115	(000000–)	Strip, Retainer	1
4	1037354	(000000–)	Screw, Hex, M8 X 1.25 X 30, 9.8, Sems	9
5	1037346	(000000–)	Screw, Hex, M8 X 1.25 X 25, 9.8, Sems	8
6	1051045	(000000–)	Door Wldt, Dump, Hppr	1
7	87689	(000000–)	Cord, Sponge, Neo, 1.0d 36.3l	1
8	360603	(000000–)	Seal, Rbr, .13 6.34w 36.3l, 12/.28h, Red	1
9	1052446	(000000–)	Strip, Retainer, Dump Door	1
10	12459	(000000–)	Screw, Hex, M6 X 1.00 X 20, Fmg	6
11	1055583	(000000–)	Seal, Rbr, Clsd, 0.13, Door, Dump, Side	2
12	360424	(000000–)	Retainer, Seal, Hppr Door, Side	2
13	74455	(000000–)	Screw, Hex, M6 X 1.00 X 12, Fmg	12
14	41178	(000000–)	Washer, Flat, 0.25, Fendr	2
15	64379	(000000–)	Bushing, Sleeve, 0.75b 0.88d 0.75l, Tef	2
16	87104	(000000–)	Tube, 0.38id 0.75od 00.9l, Stl	2
17	09026	(000000–)	Screw, Hex, M8 X 1.25 X 40, Ss	2
18	32491	(000000–)	Washer, Flat, 0.31, Std	6
19	32492	(000000–)	Washer, Flat, 0.38, Std	2
20	08709	(000000–)	Nut, Hex, Lock, M8 X 1.25, Nl	6
21	1050243	(000000–)	Bracket, Angle, Pivot, Door, Dump, Lh	1
22	1050242	(000000–)	Bracket, Angle, Pivot, Door, Dump, Rh	1
23	79246	(000000–)	Screw, Flt, Soc, M8 X 1.25 X 20, 18–8,Ss	4
24	07791	(000000–)	Nut, Hex, Flng, M8 X 1.25	4
25	1051049	(000000–)	Bracket, Mtg, Cyl	1
26	1038176	(000000–)	Cylinder, Hyd, 2.0b 08.0l 04.00strk 2500	1
27	77097	(000000–002999)	Fitting, Hyd, E90, Jm04/Om04	2
27	762427	(003000–)	Fitting, Hyd, E90, Fm04/Om04	2
28	51225–1	(000000–)	Pin, Clevis, 0.50d X 6.00l	1
29	360848	(000000–)	Spacer, 0.56b 0.88d 1.82l, Pl	2
30	32486	(000000–)	Washer Flat,0.50,Sae	4
31	08182	(000000–)	Pin, Cotter, .125 X 1.00	2
32	11211	(000000–)	Pin, Clevis, 0.50d X 2.25l	1
33	360606	(000000–)	Spring, Tens	2
34	1051773	(000000–)	Bracket, Door, Indicator	1
35	1051766	(000000–)	Bracket, Door, Indicator	1
36	32490	(000000–)	Washer, Flat, 0.25, Std	5
37	59965	(000000–)	Switch, Snap, 15a No, Rlr	1
38	09244	(000000–)	Screw, Hex, M5 X 0.80 X 16, 8.8	2
39	06549	(000000–)	Nut, Hex, Lock, M5 X 0.80, Nl	2
40	1051800	(000000–)	Switch, Press	1
41	06927	(000000–)	Screw, Pan, Phl, M4 X 0.70 X 16, 4.8	2
42	02850	(000000–)	Nut, Hex, Lock, M4 X 0.70, Nl	2
43	67767	(000000–)	Clamp, Cable, Stl, 0.69d X 0.62w, 1hole	1
44	1036892	(000000–)	Screw, Hex, M6 X 1.00 X 25, 9.8 Sems	1
45	1044273	(000000–)	Plate Wldt, Back, Hppr	1
46	08708	(000000–)	Nut, Hex, Lock, M6 X 1.00, Nl	1
47	15675	(000000–)	Screw, Hex, M8 X 1.25 X 16, Ss	5
48	1014563	(000000–)	Washer, Flat, 0.40b 1.12d .12, Ss	5
49	379719	(000000–)	Hose, Vacuum, 0.16id X 060.0l	1
50	40607	(000000–)	Fitting, Brs, Str, Bm03/Pm02	2
51	10632–4	(000000–)	Grommet, Rbr, 0.62id, F/0.9h, .06 Matl	1
52	08793	(000000–)	Washer, Flat, 0.20b 0.50d .06, Alm, Blnd	4

Fig. 29 – Hopper Filter Shaker Tray Group

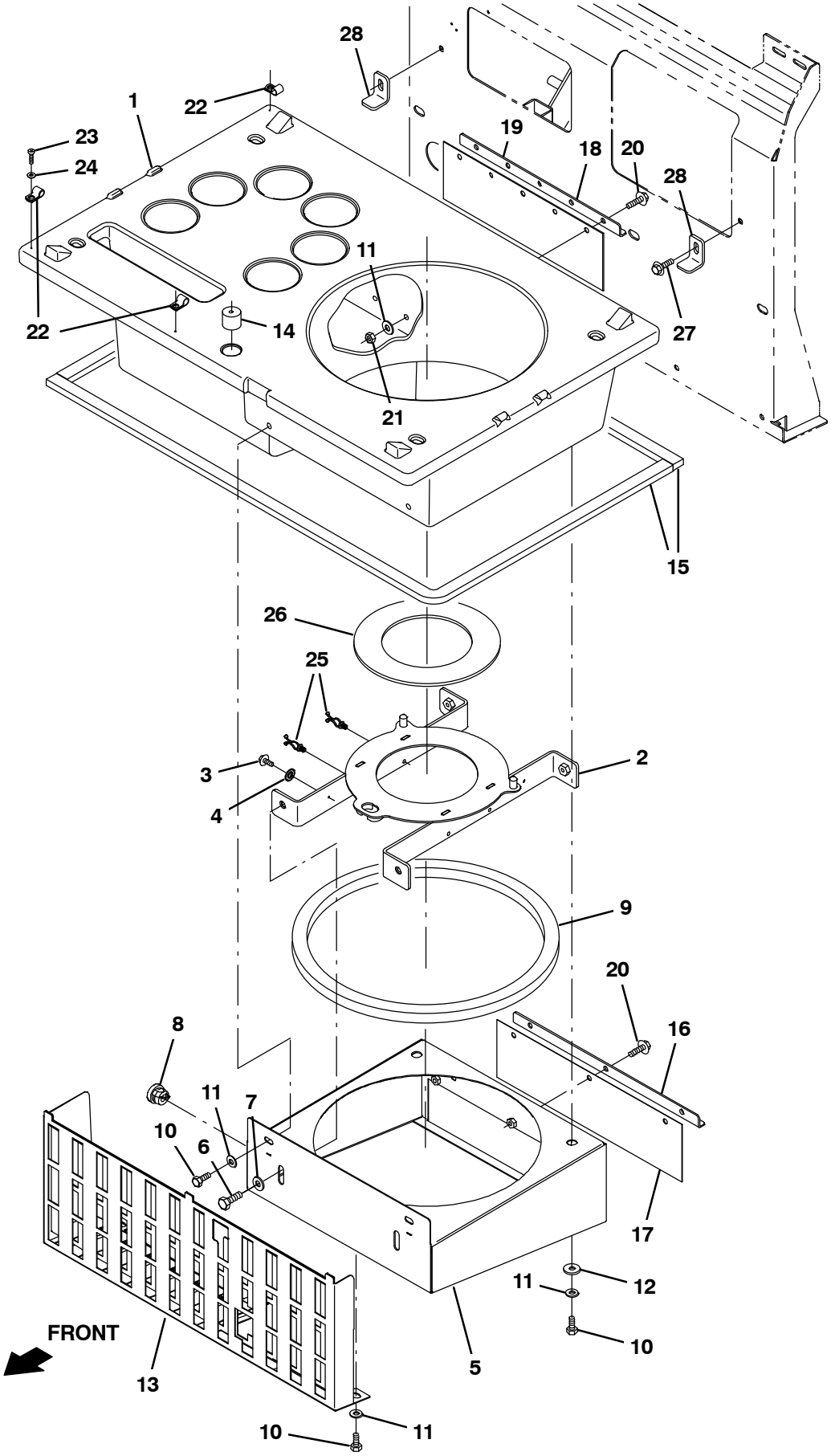

354916 – NA

Fig. 29 – Hopper Filter Shaker Tray Group

Ref.	Part No.	Serial Number	Description	Qty.
1	1043815	(000000–)	Tray, Mold	1
2	1044285	(000000–)	Tray, Dust, Shakr	1
3	74455	(000000–)	Screw, Hex, M6 X 1.00 X 12, Fmg	1
4	41140	(000000–)	Washer, Lock, Int–Ext, 0.25	1
5	1043383	(000000–)	Tray Wldt, Dust [Cyclone]	1
6	06961	(000000–)	Screw, Hex, M10 X 1.50 X 20, 8.8	4
7	32492	(000000–)	Washer, Flat, 0.38, Std	6
8	1051199	(000000–)	Strainrelief	1
9	1050106	(000000–)	Gasket, Tray	1
10	16735	(000000–)	Screw, Hex, M8 X 1.25 X 16, 8.8	7
11	32491	(000000–)	Washer, Flat, 0.31, Std	8
12	30013	(000000–)	Washer, Flat, 0.31, Fendr	2
13	1039250	(000000–)	Plate Wldt, Perma–Filter	1
14	1049982	(000000–)	Seal, Foam	1
15	1050106	(000000–)	Gasket, Tray	2
16	1042282	(000000–)	Retainer, Seal, Dust, .12 X 0.8w X 33.6l	1
17	1042285	(000000–)	Seal Assy, Pre–Filter	1
18	1049408	(000000–)	Retainer, Seal, Dust, .12 X 0.8w X 33.6l	1
19	1049409	(000000–)	Seal Assy, Pre–Filter	1
20	1037355	(000000–)	Screw, Hex, M8 X 1.25 X 35, 9.8, Sems	8
21	08709	(000000–)	Nut, Hex, Lock, M8 X 1.25, Nl	5
22	67767	(000000–)	Clamp, Cable, Stl, 0.69d X 0.62w, 1hole	3
23	360943	(000000–)	Screw, Pan, Phl, 10–14 X 0.75, F/ Plstc	1
24	19066	(000000–)	Washer, Flat, 10	1
25	30406	(000000–)	Clip, Keeper	3
26	1044351	(000000–)	Spacer, Fltr	1
27	1037346	(000000–)	Screw, Hex, M8 X 1.25 X 25, 9.8, Sems	2
28	1052919	(000000–)	Bracket, Tray	2

Fig. 30 – Hopper Filter Shaker Cover Group

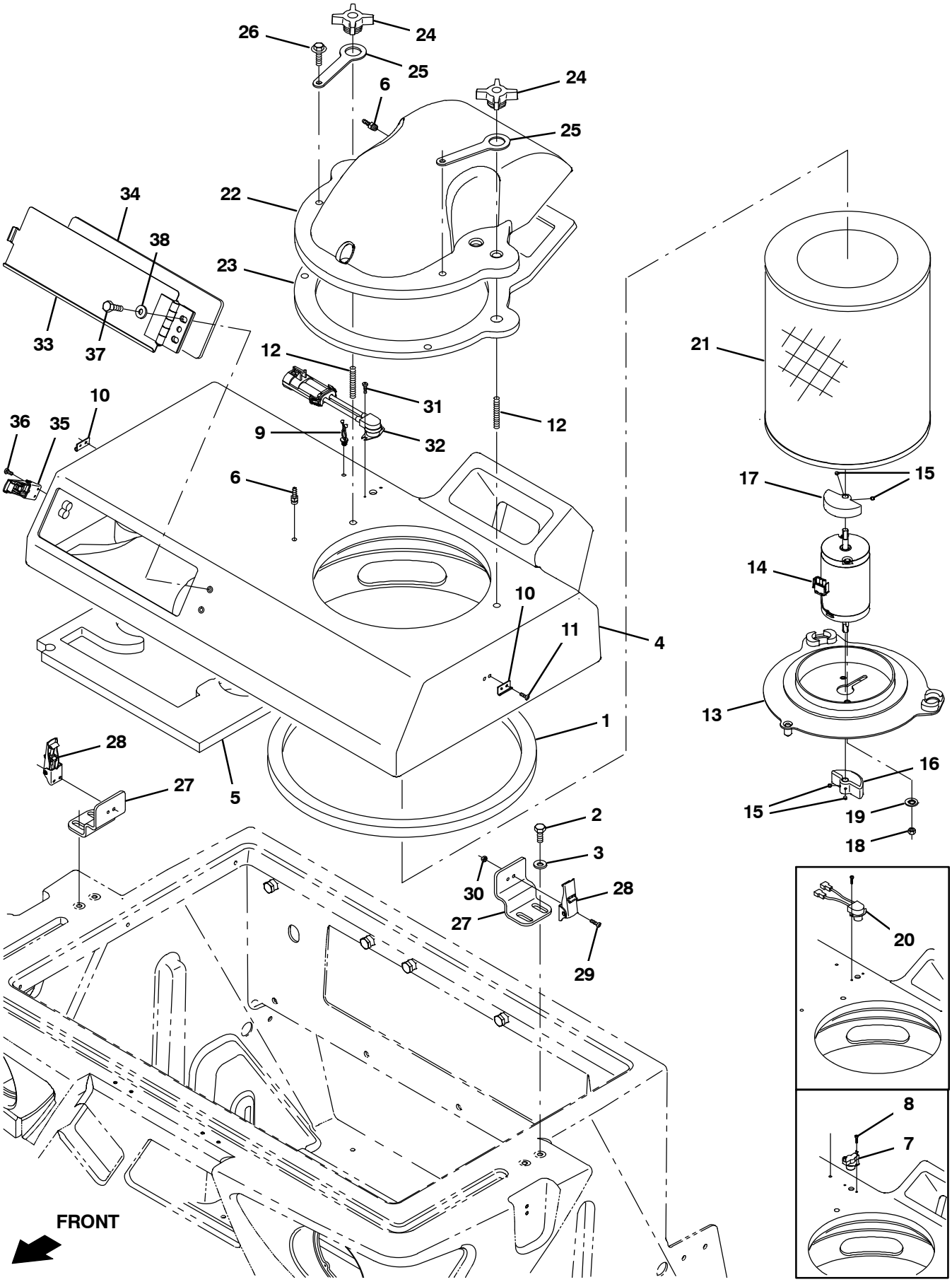

356813 – E, NA

Fig. 30 – Hopper Filter Shaker Cover Group

Ref.	Part No.	Serial Number	Description	Qty.
1	1050106	(000000–)	Gasket, Tray	1
2	16735	(000000–)	Screw, Hex, M8 X 1.25 X 16, 8.8	7
3	32491	(000000–)	Washer, Flat, 0.31, Std	8
4	1043818	(000000–)	Cover, Mold	1
5	1057959	(000000–)	Gasket, Tray	1
6	40607	(000000–)	Fitting, Brs, Str, Bm03/Pm02	2
7	87546	(000000–001070)	Sensor, Thermal, 140deg, No, Spst	1
8	360973	(000000–001070)	Screw, Pan, 12–16 X 0.50, F/ Plstc	2
9	30406	(000000–)	Clip, Keeper	3
10	384419	(000000–)	Bracket, Latch, Keeper [Southco]	2
11	49697	(000000–)	Screw, Pan, Phl, M4 X 0.70 X 10, Ss	4
12	1049860	(000000–)	Stud, M8 X 1.25 [55.0]	2
13	1044352	(000000–)	Bracket Wldt, Fltr	1
14	1075328	(000000–)	Motor, Ele, 36vdc 22017rpm 0.11hp 03.3a	1
15	39322	(000000–)	Screw, Set, Soc, 10–24 X 0.38, Al	4
16	1053321	(000000–)	Weight, Eccentric, Pntd	1
17	1053291	(000000–)	Weight, Eccentric, Pntd	1
18	86618	(000000–)	Nut, Hex, Lock, #10–32, Nl	2
19	07514	(000000–)	Washer, Lock, Int, 10, Ss	2
20	1056298	(001071–001361)	Switch, Temp, Sealed, Nc	1
21	1045900	(000000–)	Filter, Cyl, 11.09d, 13.31l, 6.724 Id	1
22	1043819	(000000–)	Elbow, Mold	1
23	1044356	(000000–)	Gasket, Cover	1
24	1048335	(000000–)	Knob, Star, 2.75d 4ear 1.1l M8x1.25	2
25	1048353	(000000–)	Strap, Rbr	2
26	1037346	(000000–)	Screw, Hex, M8 X 1.25 X 25, 9.8, Sems	4
27	1044146	(000000–)	Bar, Cover	1
28	384418	(000000–)	Latch, Door [Southco 91–562–07]	2
29	24265	(000000–)	Screw, Pan, Phl, M4 X 0.70 X 16, Ss	4
30	02850	(000000–)	Nut, Hex, Lock, M4 X 0.70, Nl	4
31	763149	(001071–)	Screw, Pan, 06– X 0.38, F/ Plstc	2
32	1061575	(001362–)	Switch, Temp, Sealed, Nc	1
33	1076311	(006266–)	Door Wldt, Cleanout [S20]	1
34	1236153	(006266–)	Seal, Cleanout Door	1
35	384418	(006266–)	Latch, Door [Southco 91–562–07]	1
36	24265	(006266–)	Screw, Pan, Phl, M4 X 0.70 X 16, Ss	2
37	15675	(006266–)	Screw, Hex, M8 X 1.25 X 30, 8.8	2
38	01685	(006266–)	Washer, Flat, 0.32b 1.00d .12, Ss	2

Fig. 31 – Hydraulic Schematic

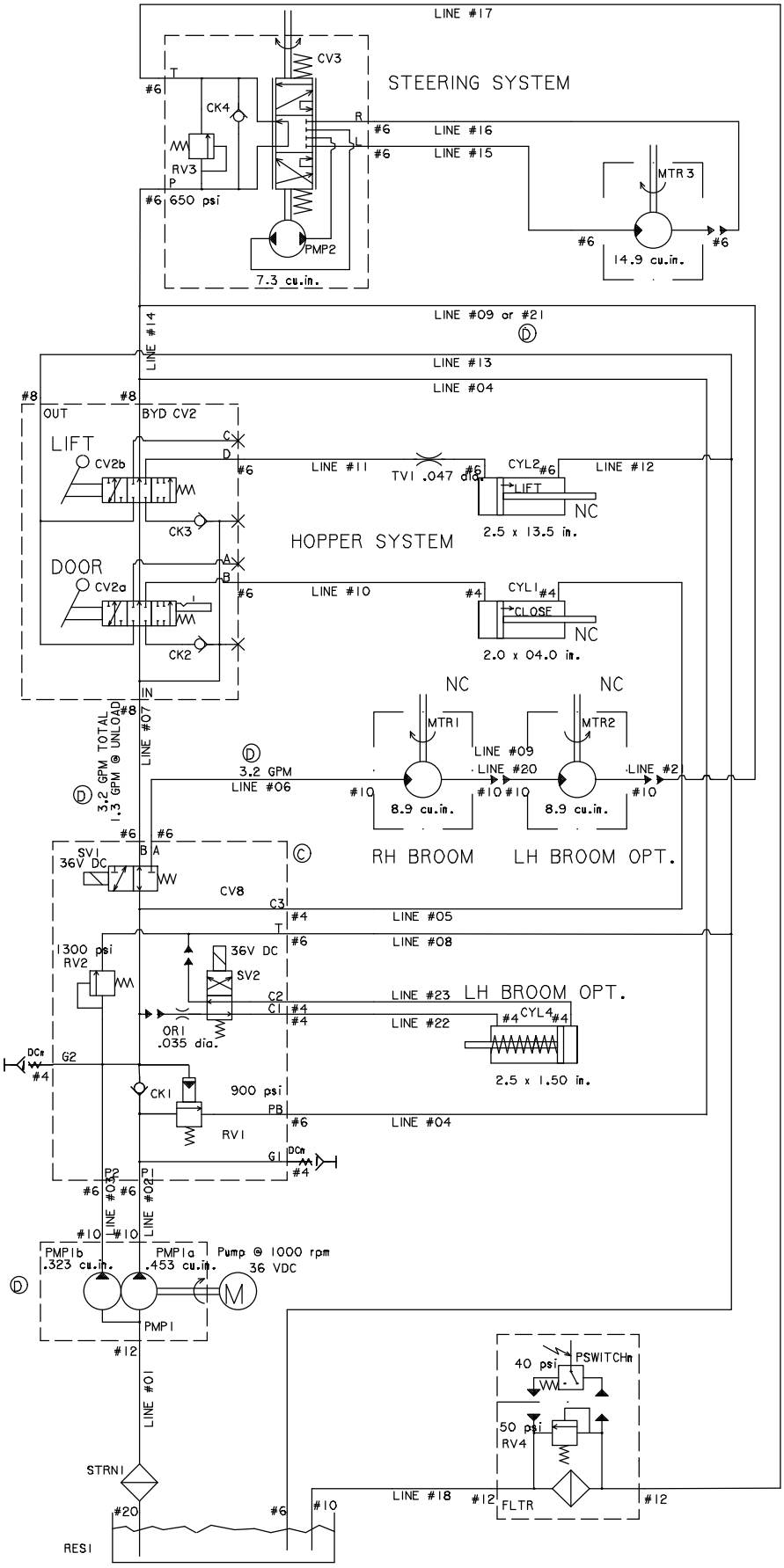

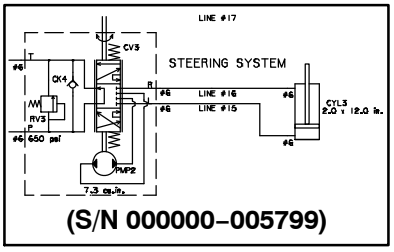

(S/N 000000–005799)

354980 – 1048769

Fig. 32 – Hydraulic Hose Group

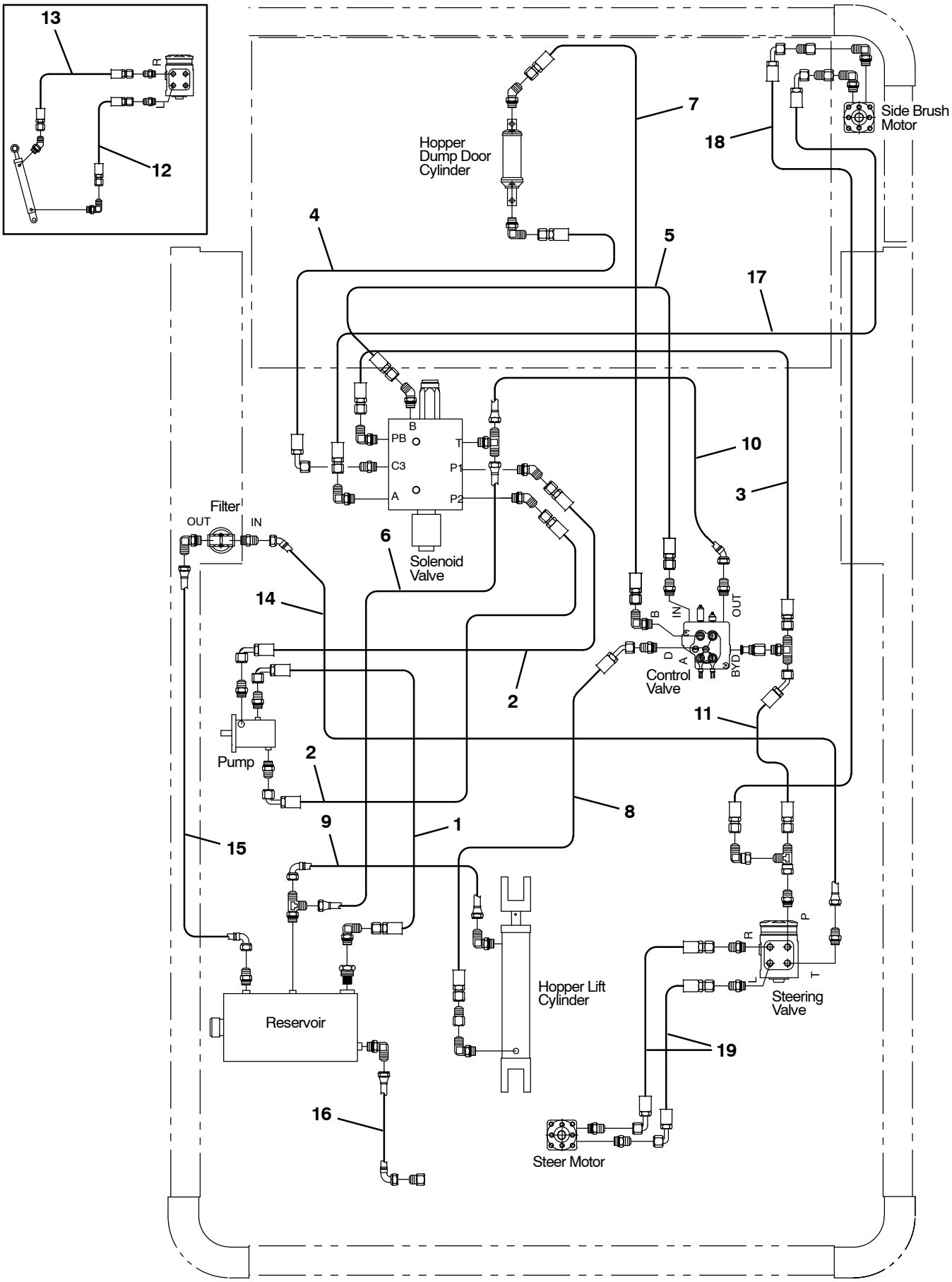

356017– E, NA

Fig. 32 – Hydraulic Hose Group

Ref.	Part No.	Serial Number	Description	Qty.
1	361038	(000000–002999)	Hose, Hyd, Suc12, Jf12e90/Jf12str, 024.0	1
1	1071757	(003000–)	Hose, Hyd, Suc12, Of12e90/Of12str, 024.0	1
2	387282	(000000–002999)	Hose, Hyd, Tc06, Jf06e90/Jf06str, 024.0	2
2	1071758	(003000–)	Hose, Hyd, Tc06, Of06e90/Of06str, 024.0	2
3	361040	(000000–002999)	Hose, Hyd, Tc06, Jf06e90/Jf06str, 034.0	1
3	1071718	(003000–)	Hose, Hyd, Tc06, Of06e90/Of06str, 34.0	1
4	82819	(000000–002999)	Hose, Hyd, Med04, Jf04e90/Jf04str, 088.0	1
4	1071760	(003000–)	Hose, Hyd, Med04, Of04e90/Of04str, 088.0	1
5	1055376	(000000–002999)	Hose, Hyd, Tc06, Jf06str/Jf06str, 020.0	1
5	1071761	(003000–)	Hose, Hyd, Tc06, Of06str/Of06str, 020.0	1
6	76762	(000000–002999)	Hose, Hyd, Low06, Jf06str/Jf06str, 026.0	1
6	1071763	(003000–)	Hose, Hyd, Low06, Of06str/Of06str, 026.0	1
7	1027321	(000000–002999)	Hose, Hyd, Tc04, Jf04str/Jf04e90, 070.0	1
7	1071734	(003000–)	Hose, Hyd, Tc04, Of04str/Of04e90, 070.0	1
8	57972	(000000–002999)	Hose, Hyd, Med04, Jf04e45/Jf04str, 018.0	1
8	1071765	(003000–)	Hose, Hyd, Med04, Of04e45/Of04str, 018.0	1
9	31603	(000000–002999)	Hose, Hyd, Low06, Jf06e90/Jf06str, 052.0	1
9	1071766	(003000–)	Hose, Hyd, Low06, Of06e90/Of06str, 052.0	1
10	361031	(000000–002999)	Hose, Hyd, Low06, Jf06e45/Jf06str, 022.0	1
10	1071767	(003000–)	Hose, Hyd, Low06, Of06e45/Of06str, 022.0	1
11	361045	(000000–002999)	Hose, Hyd, Med06, Jf06e45/Jf06str, 021.0	1
11	1071768	(003000–)	Hose, Hyd, Med06, Of06e45/Of06str, 021.0	1
12	361053	(000000–002999)	Hose, Hyd, Med06, Jf06str/Jf06str, 030.0	1
12	1071769	(003000–005799)	Hose, Hyd, Med06, Of06str/Of06str, 030.0	1
13	71556	(000000–002999)	Hose, Hyd, Med06, Jf06str/Jf06str, 042.0	1
13	1071770	(003000–005799)	Hose, Hyd, Med06, Of06str/Of06str, 042.0	1
14	361032	(000000–002999)	Hose, Hyd, Low08, Jf08e45/Jf08str, 024.0	1
14	1071771	(003000–)	Hose, Hyd, Low08, Of08e45/Of08str, 024.0	1
15	71557	(000000–002999)	Hose, Hyd, Low08, Jf08e90/Jf08str, 032.0	1
15	1071772	(003000–)	Hose, Hyd, Low08, Of08e90/Of08str, 032.0	1
16	57974	(000000–002999)	Hose, Hyd, Low08, Jf08e90/Jf08str, 024.0	1
16	1071773	(003000–)	Hose, Hyd, Low08, Of08e90/Of08str, 024.0	1
17	02469	(000000–002999)	Hose, Hyd, Med06, Jf06e90/Jf06str, 100.0	1
17	1071774	(003000–)	Hose, Hyd, Med06, Of06e90/Of06str, 100.0	1
18	31597	(000000–002999)	Hose, Hyd, Med06, Jf06e90/Jf06str, 068.0	1
18	1071776	(003000–)	Hose, Hyd, Med06, Of06e90/Of06str, 068.0	1
19	1071776	(005800–)	Hose, Hyd, Med06, Of06e90/Of06str, 068.0	2

Fig. 33 – Hydraulic Reservoir Group

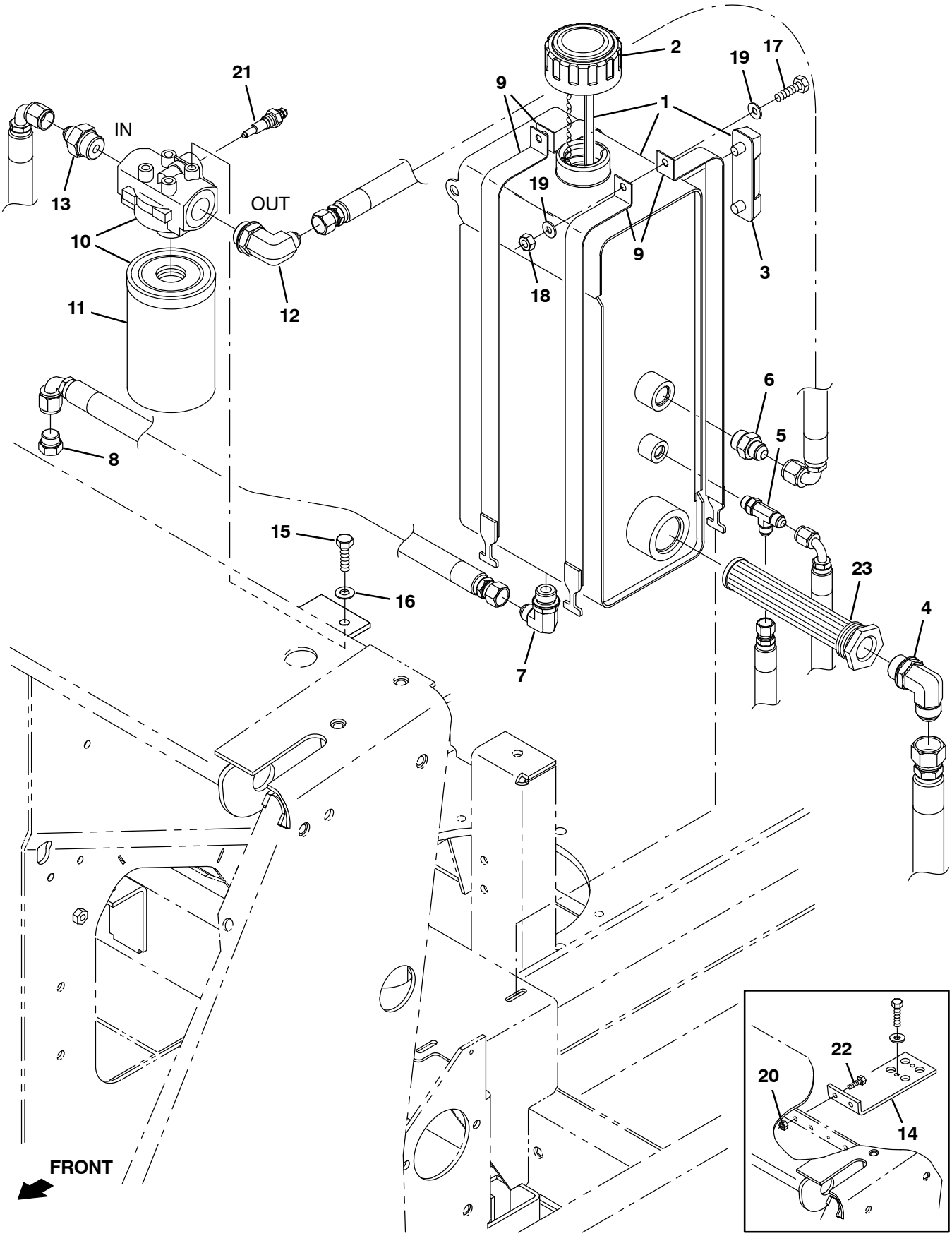

356014 – E, NA

Fig. 33 – Hydraulic Reservoir Group

	Ref.	Part No.	Serial Number	Description	Qty.
▽	1	361271	(000000–)	Reservoir, 02.8gal, W/ Label [6400e]	1
▲	2	360991	(000000–)	Cap, Breather, Hyd, 5.2 Ds	1
▲		70006	(000000–)	Gasket, Cap, Breather, Hyd	1
▲	3	65215	(000000–)	Gauge, Sensing, Level	1
	4	46481	(000000–002999)	Fitting, Hyd, E90, Jm12/Om12	1
	4	762492	(003000–)	Fitting, Hyd, E90, Fm12/Om12	1
	5	76316	(000000–002999)	Fitting, Hyd, Tee, Jm06/Jm06/Om06, Run	1
	5	762434	(003000–)	Fitting, Hyd, Tee, Fm06/Fm06/Om06, Run	1
	6	56692	(000000–002999)	Fitting, Hyd, Str, Jm08/Om10	1
	6	762456	(003000–)	Fitting, Hyd, Str, Fm08/Om10	1
	7	56821	(000000–002999)	Fitting, Hyd, E90, Jm08/Om10	1
	7	767411	(003000–)	Fitting, Hyd, E90, Fm08/Om10	1
	8	16376	(000000–002999)	Fitting, Hyd, Plug, Jm08	1
	8	762448	(003000–)	Fitting, Hyd, Plug, Fm08	1
	9	1051866	(000000–005693)	Strap Wldt, Tank, Hyd	4
	9	1074671	(005694–)	Strap Wldt, Tank, Hyd	4
▽	10	10664	(000000–)	Filter Assy, Hyd, 10mic 035gpm, Spin–On	1
▲	11	65221	(000000–)	Element, Fltr, Hyd Oil	1
	12	47655	(000000–002999)	Fitting, Hyd, E90, Jm08/Om12	1
	12	762462	(003000–)	Fitting, Hyd, E90, Fm08/Om12	1
	13	42227	(000000–002999)	Fitting, Hyd, Str, Jm08/Om12	1
	13	762457	(003000–)	Fitting, Hyd, Str, Fm08/Om12	1
	14	1051892	(000000–001291)	Bracket, Mtg, Fltr, Hyd	1
	15	34195	(000000–)	Screw, Hex, .38–16 X 1.00, Nl	2
	16	32485	(000000–)	Washer, Flat, 0.38, Sae	2
	17	1037354	(000000–)	Screw, Hex, M8 X 1.25 X 30, 9.8, Sems	2
	18	08709	(000000–)	Nut, Hex, Lock, M8 X 1.25, Nl	2
	19	32490	(000000–)	Washer, Flat, 0.25, Std	4
	20	07791	(000000–001291)	Nut, Hex, Flng, M8 X 1.25	2
	21	361198	(000000–)	Switch Assy, Press, No/Nc 0040Psi	1
	22	1037354	(000000–001291)	Screw, Hex, M8 X 1.25 X 30, 9.8, Sems	2
	23	361023	(000000–)	Strainer, Hyd, 010gpm 100mesh	1

Fig. 34 – Hydraulic Control Valve Group

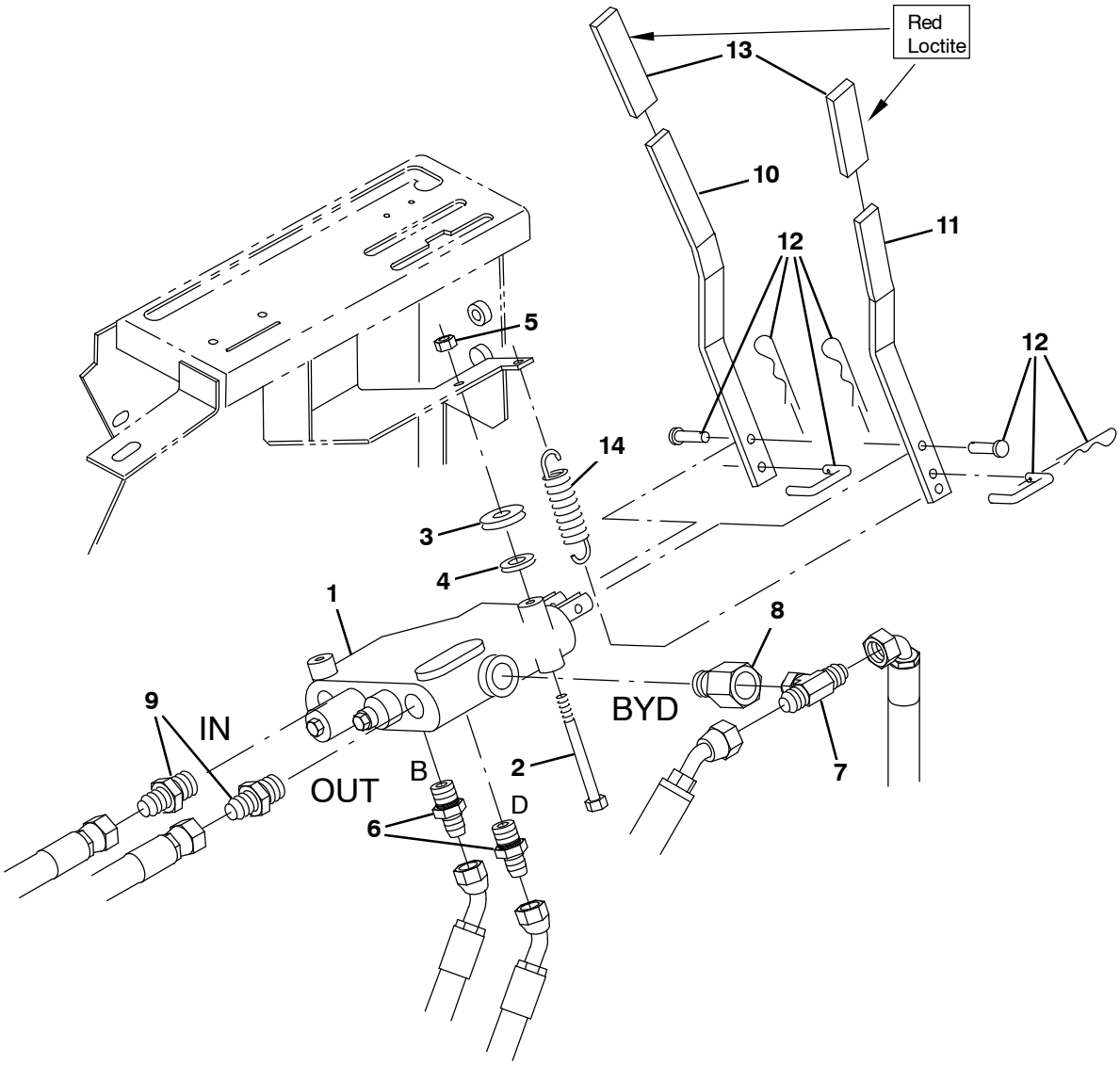

356015– E, NA

Ref.	Part No.	Serial Number	Description	Qty.
1	361012	(000000–)	Valve, Hyd, Mnl, 2spool 0100psi 10gpm (See Breakdowns)	1
2	06949	(000000–)	Screw, Hex, M6 X 1.00 X 50, 8.8	2
3	63416	(000000–)	Washer, Flat, 0.31b 0.88d .12, Rbr	2
4	32491	(000000–)	Washer, Flat, 0.31, Std	2
5	08708	(000000–)	Nut, Hex, Lock, M6 X 1.00, Nl	2
6	55685	(000000–002999)	Fitting, Hyd, Str, Jm04/Om06	2
6	762426	(003000–)	Fitting, Hyd, Str, Fm04/Om06	1
7	67683	(000000–002999)	Fitting, Hyd, Tee, Jm06/Jm06/Om06, Br	1
7	762436	(003000–)	Fitting, Hyd, Tee, Fm06/Fm06/Om06, Br	1
8	361028	(000000–)	Plug Assy, Hyd	1
9	52402	(000000–002999)	Fitting, Hyd, Str, Jm06/Om08	2
9	762438	(003000–)	Fitting, Hyd, Str, Fm6/Om08	2
10	360062	(000000–)	Handle, Cntrl, Valve	1
11	360063	(000000–)	Handle, Cntrl, Valve	1
12	361299	(000000–)	Link Assy, Valve Handle	1
13	360467	(000000–)	Grip, Vyl	2
14	59870	(000000–)	Spring, Extn, 0.38od 0.05wir 02.5l	1

Fig. 35 – Hydraulic Solenoid Valve Group

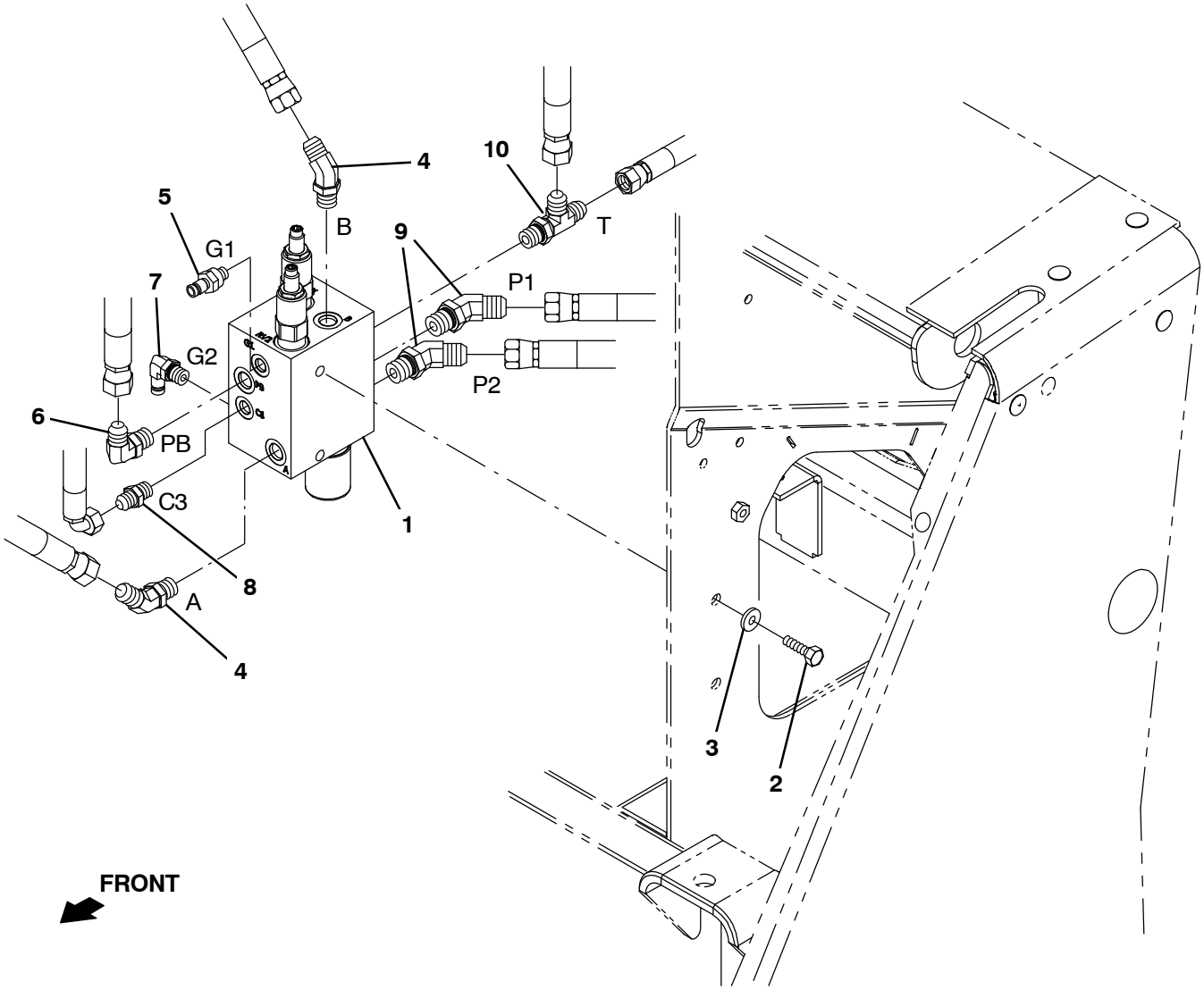

356016– E, NA

Ref.	Part No.	Serial Number	Description	Qty.
1	1046688	(000000–006445)	Valve, Hyd, Solenoid, 36vdc (See Breakdowns)	1
1	1237088	(006446–)	Valve, Hyd, Solenoid, 36vdc (See Breakdowns)	1
2	06961	(000000–)	Screw, Hex, M10 X 1.50 X 20, 8.8	2
3	32492	(000000–)	Washer, Flat, 0.38, Std	2
4	47522	(000000–002999)	Fitting, Hyd, E45, Jm06/Om06	2
4	762442	(003000–)	Fitting, Hyd, E45, Fm06/Om06	2
5	395973	(000000–)	Fitting, Hyd, Str, Om04/Qm04	1
6	56820	(000000–002999)	Fitting, Hyd, E90, Jm06/Om06	1
6	762432	(003000–)	Fitting, Hyd, E90, Fm06/Om06	1
7	395974	(000000–)	Fitting, Hyd, E90, Om04/Qm04	1
8	55586	(000000–002999)	Fitting, Hyd, Str, Jm04/Om04	1
8	762428	(003000–)	Fitting, Hyd, Str, Fm04/Om04	1
9	47522	(000000–002999)	Fitting, Hyd, E45, Jm06/Om06	2
9	762442	(003000–)	Fitting, Hyd, E45, Fm06/Om06	2
10	76316	(000000–002999)	Fitting, Hyd, Tee, Jm06/Jm06/Om06, Run	1
10	762435	(003000–)	Fitting, Hyd, Tee, Ff06/Fm06/Fm06, Run	1

Fig. 36 – Electrical Control Box Group

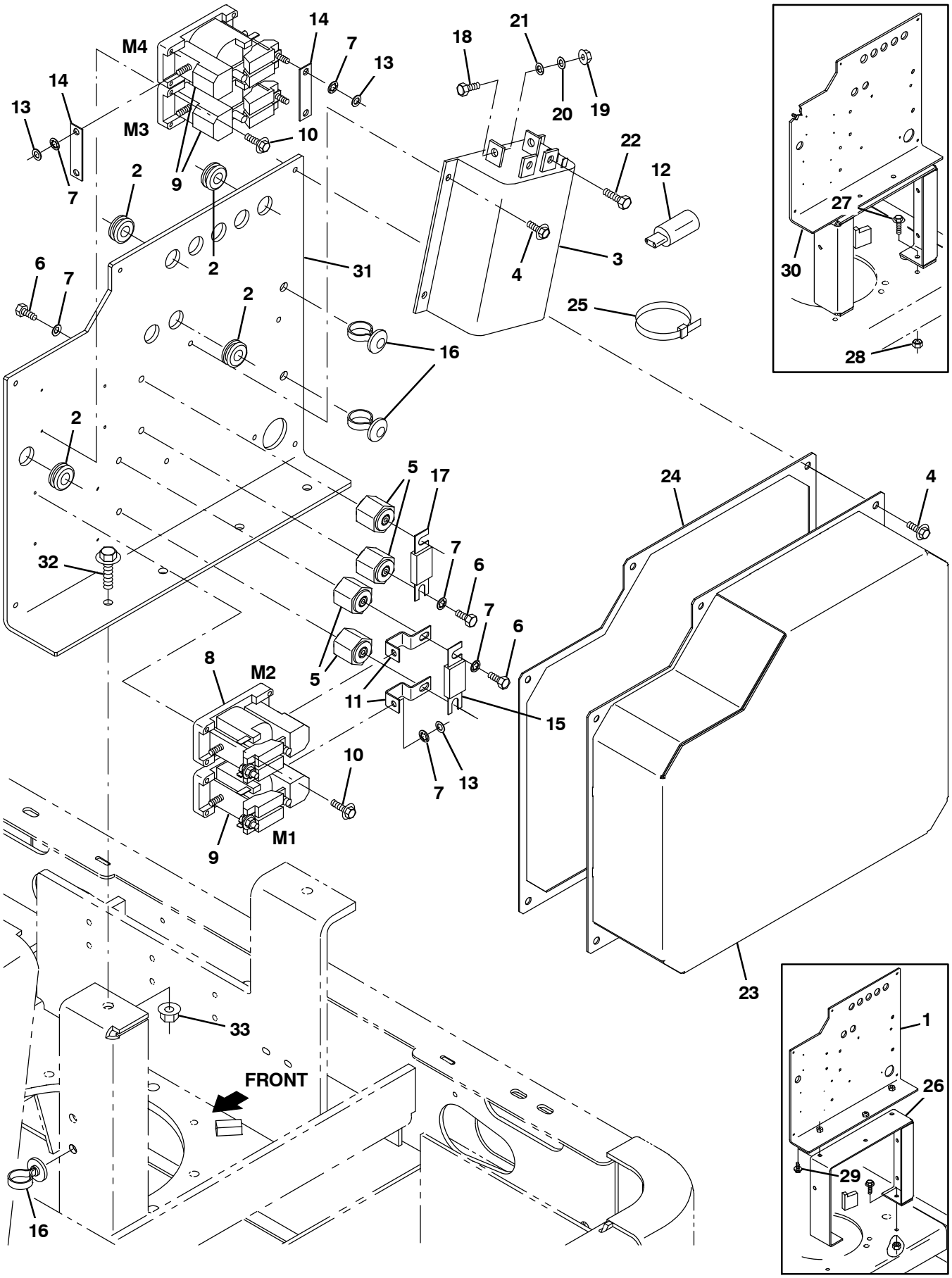

356010– E, NA

Fig. 36 – Electrical Control Box Group

Ref.	Part No.	Serial Number	Description	Qty.
1	9006977	(000000–001286)	Plate, Component, Ele, W/Label [S20] Na	1
1	9006976	(000000–001286)	Plate, Component, Ele, W/Label [S20] Jp	1
2	10632–15	(000000–)	Grommet, Rbr, 0.50id, F/0.8h, .09 Matl	8
3	15008	(000000–)	Controller, 36vdc [Only F/ Tnv]	1
4	74455	(000000–)	Screw, Hex, M6 X 1.00 X 12, Fmg	9
5	76062	(000000–)	Stand–Off, Wir, M6, Insulator, Panel	4
6	19315	(000000–)	Screw, Hex, .25–20 X 0.50, G5	10
7	32982	(000000–)	Washer, Lock, Int, 0.25	16
8	86375	(000000–)	Contactor, 36vdc [Spno]	1
9	87482	(000000–)	Relay, 36vdc, 100a, Spdt No [Cabelform]	3
10	86417	(000000–)	Screw, Hex, 06–32 X 0.75, Fmg, Pl	8
11	87507	(000000–)	Busbar, Fuse, .6 0.6w 0.8h 2.0l	2
12	360516	(000000–)	Resistor, Ele, Plug	1
13	32483	(000000–)	Washer, Flat, 0.25, Sae	6
14	87483	(000000–)	Busbar, .06 0.6w 2.5l 2/.28h	2
15	86379	(000000–)	Fuse, 100a, 0.88 2.4l, 125volt	1
16	1041873	(000000–)	Fastener, Wire, Tie [Button Head]	3
17	87318	(000000–)	Fuse, 080a, 0.88 2.4l, 125volt,Slow–Blow	1
18	16931	(000000–)	Screw, Hex, M8 X 1.25 X 20, 8.8	3
19	07791	(000000–)	Nut, Hex, Flng, M8 X 1.25	4
20	32490	(000000–)	Washer, Flat, 0.25, Std	4
21	32984	(000000–)	Washer, Lock, Int, 0.31	4
22	39277	(000000–)	Screw, Hex, M8 X 1.25 X 25, 8.8	1
23	9006985	(000000–)	Cover, Wldt, Component, Ele, W/Label [S20] Na	1
23	9006986	(000000–)	Cover, Wldt, Component, Ele, W/Label [S20] Jp	1
24	1053395	(000000–)	Gasket, Cover	1
25	49266	(000000–)	Tie, Cable, Nyl, 07.3l .19w 1.8 Max D	5
26	1050158	(000000–001286)	Bracket, Sppt, Ele Panl	1
27	1037358	(000000–005799)	Screw, Hex, M10 X 1.50 X 35, 9.8, Sems	2
28	07792	(000000–005799)	Nut, Hex, Flng, M10 X 1.50	2
29	1020341	(000000–001286)	Screw, Hex, M8 X 1.25 X 20, Ss, Sems	3
30	9007176	(001287–005799)	Bracket, Panl, Contrl, W/Label, Na	1
30	9007175	(001287–005799)	Bracket, Panl, Contrl, W/Label, Jp	1
31	9013149	(005800–)	Bracket Kit, Panl, Cntrl, W/Label, Na	1
31	9013148	(005800–)	Bracket Kit, Panl, Cntrl, W/Label, Jp	1
32	1037346	(005800–)	Screw, Hex, M8 X 1.25 X 25, 9.8, Sems	1
33	07791	(005800–)	Nut, Hex, Flng, M8 X 1.25	1

Fig. 37 – Electrical Control Box Wire Connection Group

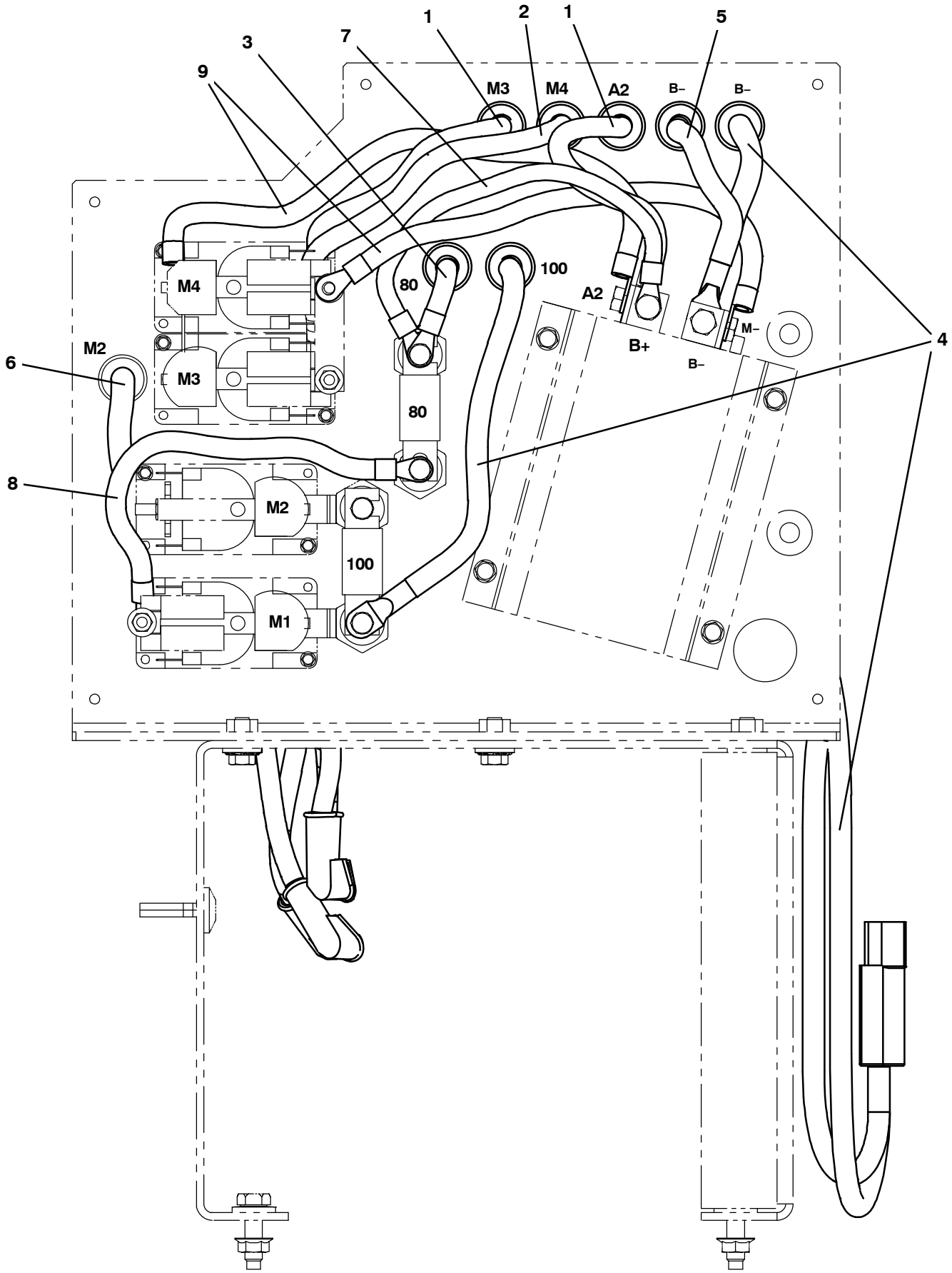

356011– E

Fig. 37 – Electrical Control Box Wire Connection Group

Ref.	Part No.	Serial Number	Description	Qty.
1	87496	(000000–)	Cable, 04ga 30.0l Blk .34ring /.34ring	2
2	71529	(000000–)	Cable, 04ga 32.0l Blk .34ring /.34ring	1
3	87558	(000000–)	Cable, 04ga 21.0l Blk .28ring /.34ring	1
4	1052625	(000000–)	Harness, Wire, Controller	1
5	86398	(000000–)	Cable, 04ga 60.0l Blk .34ring /.34ring	1
6	360989	(000000–)	Cable, 04ga 48.0l Blk .28ring /.34ring	1
7	15846	(000000–)	Cable, 06ga 11.0l Blk .28ring /.34ring	1
8	223356	(000000–)	Cable, 04ga 12.0l Blk .34ring /.34ring	1
9	87495	(000000–)	Cable, 04ga 15.0l Blk .28ring /.34ring	2

Fig. 38 – Electrical Schematic

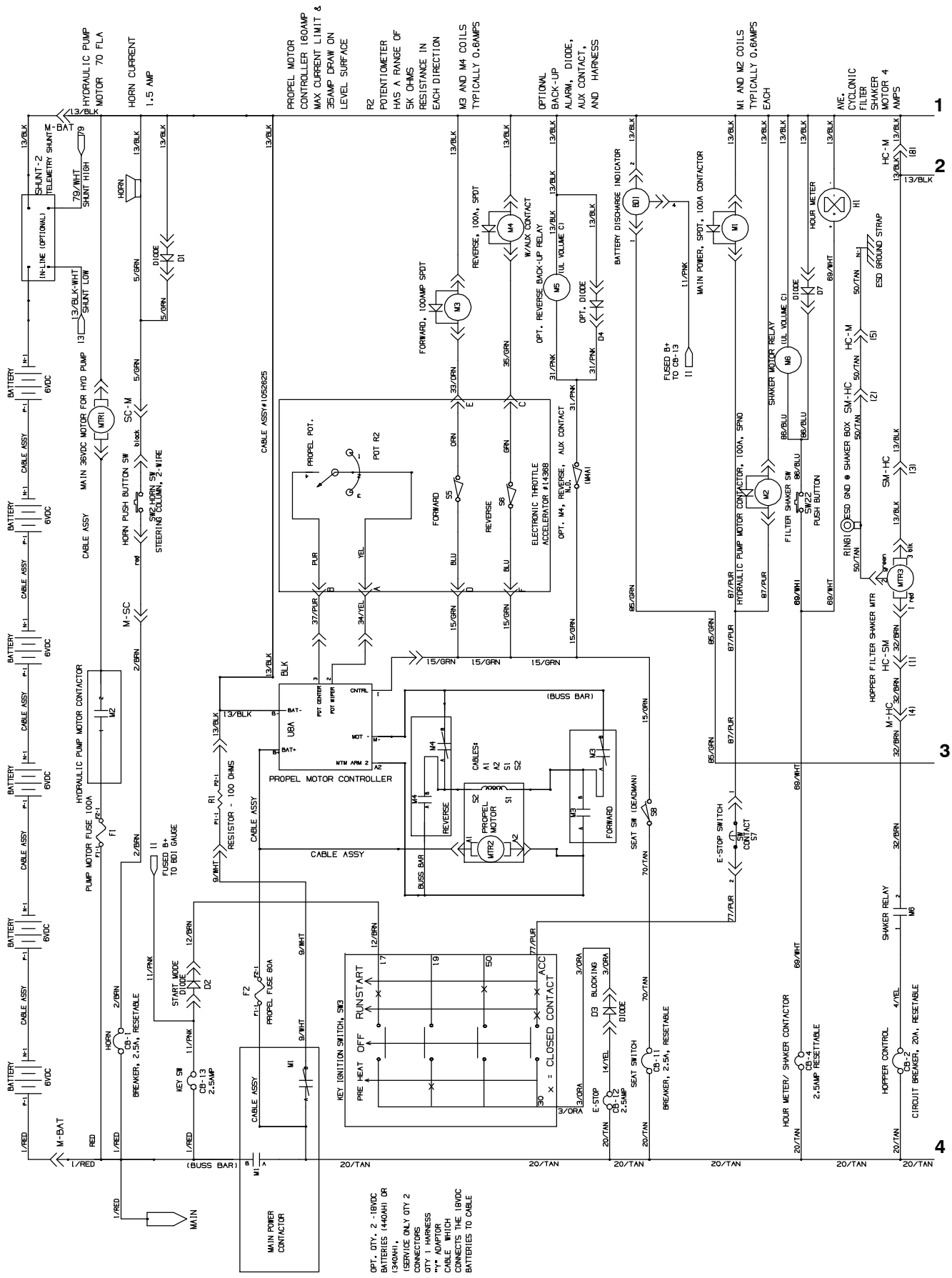

354987, 1048610 – E

Fig. 38 – Electrical Schematic

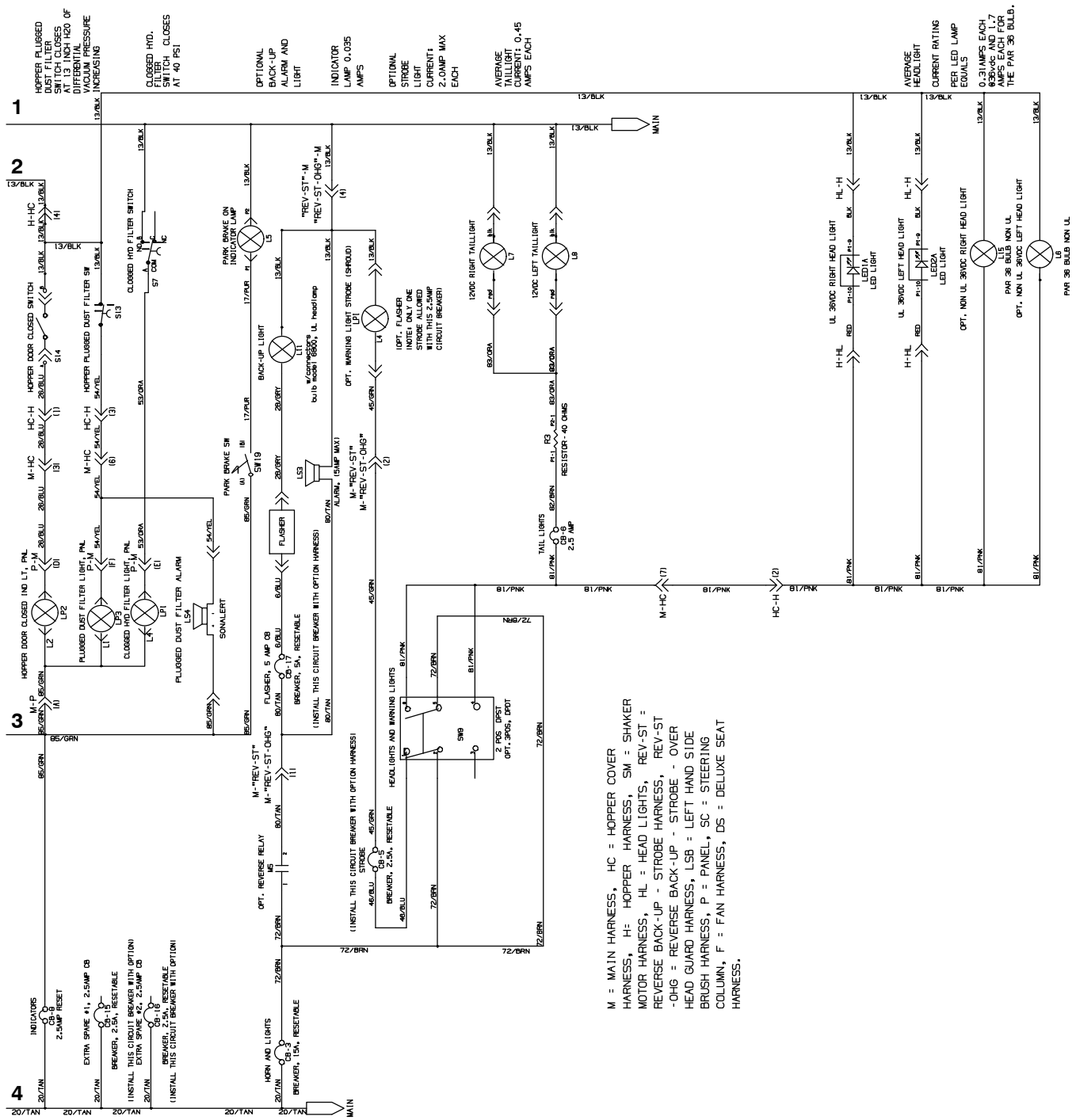

354987, 1048610 – E

Fig. 38 – Electrical Schematic

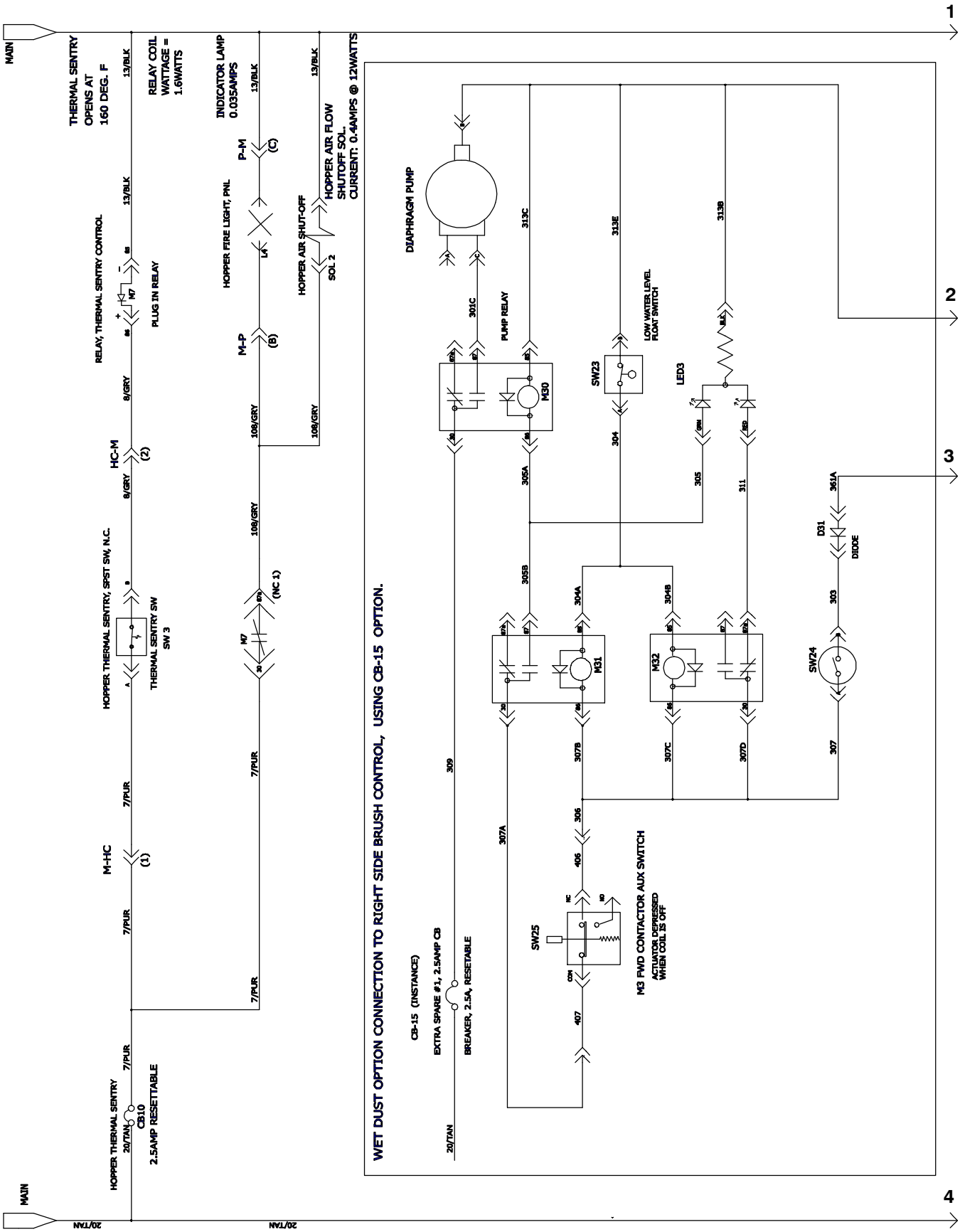

354987, 1048610 – E

Fig. 38 – Electrical Schematic

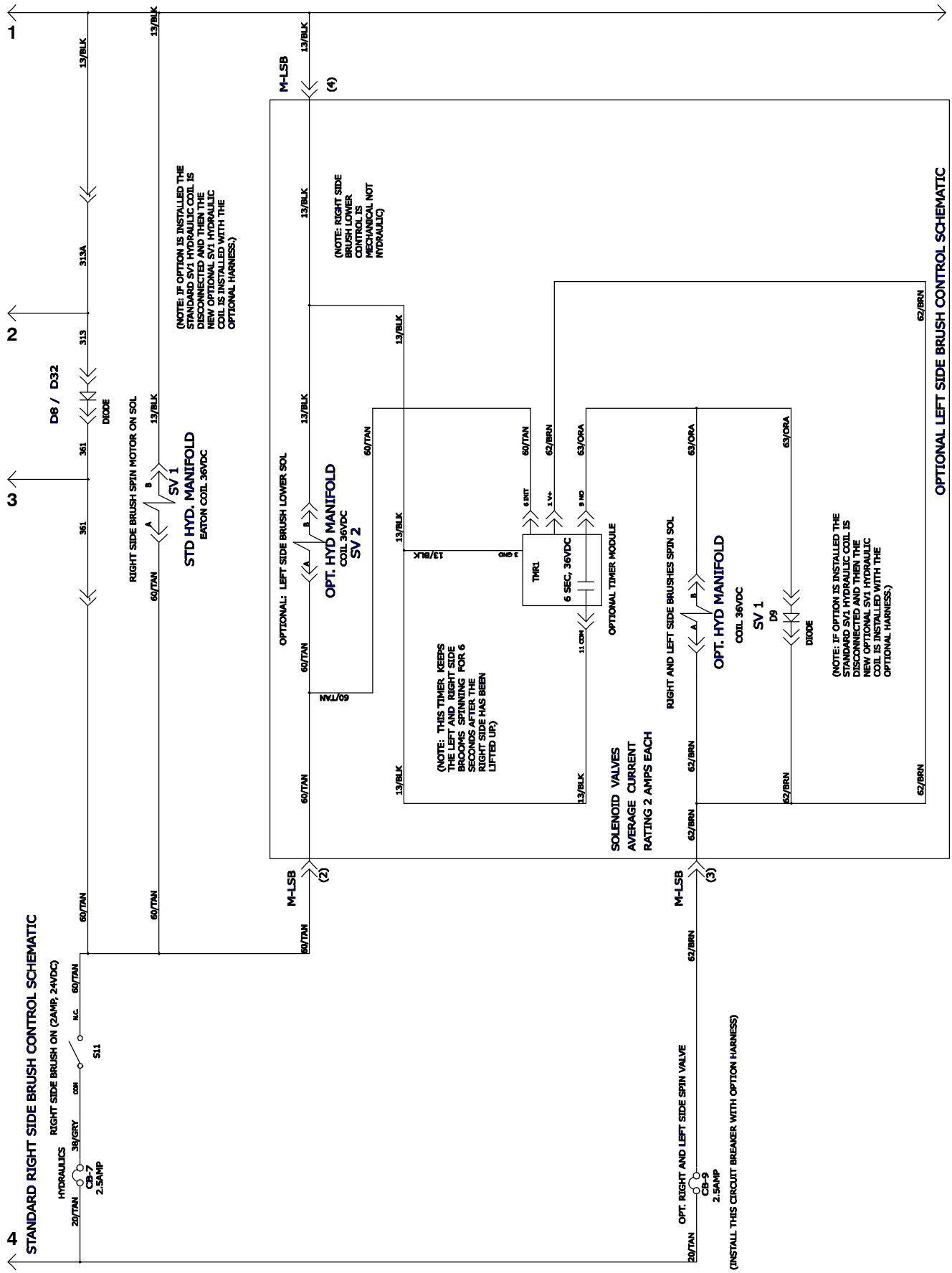

354987, 1048610 – E

Fig. 38 – Electrical Schematic

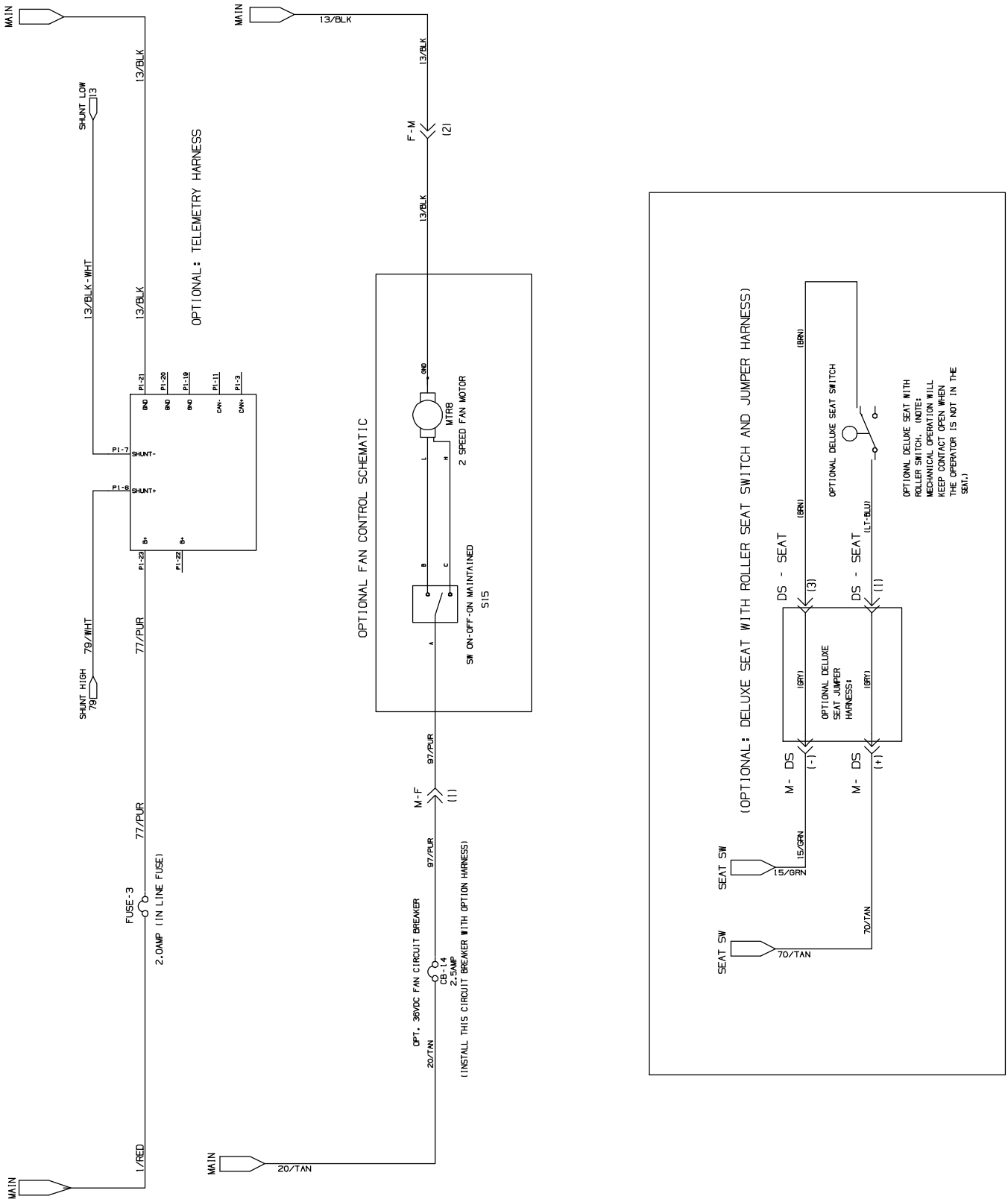

354987, 1048610 – E

Fig. 39 – Electrical Wire Harnesses Group

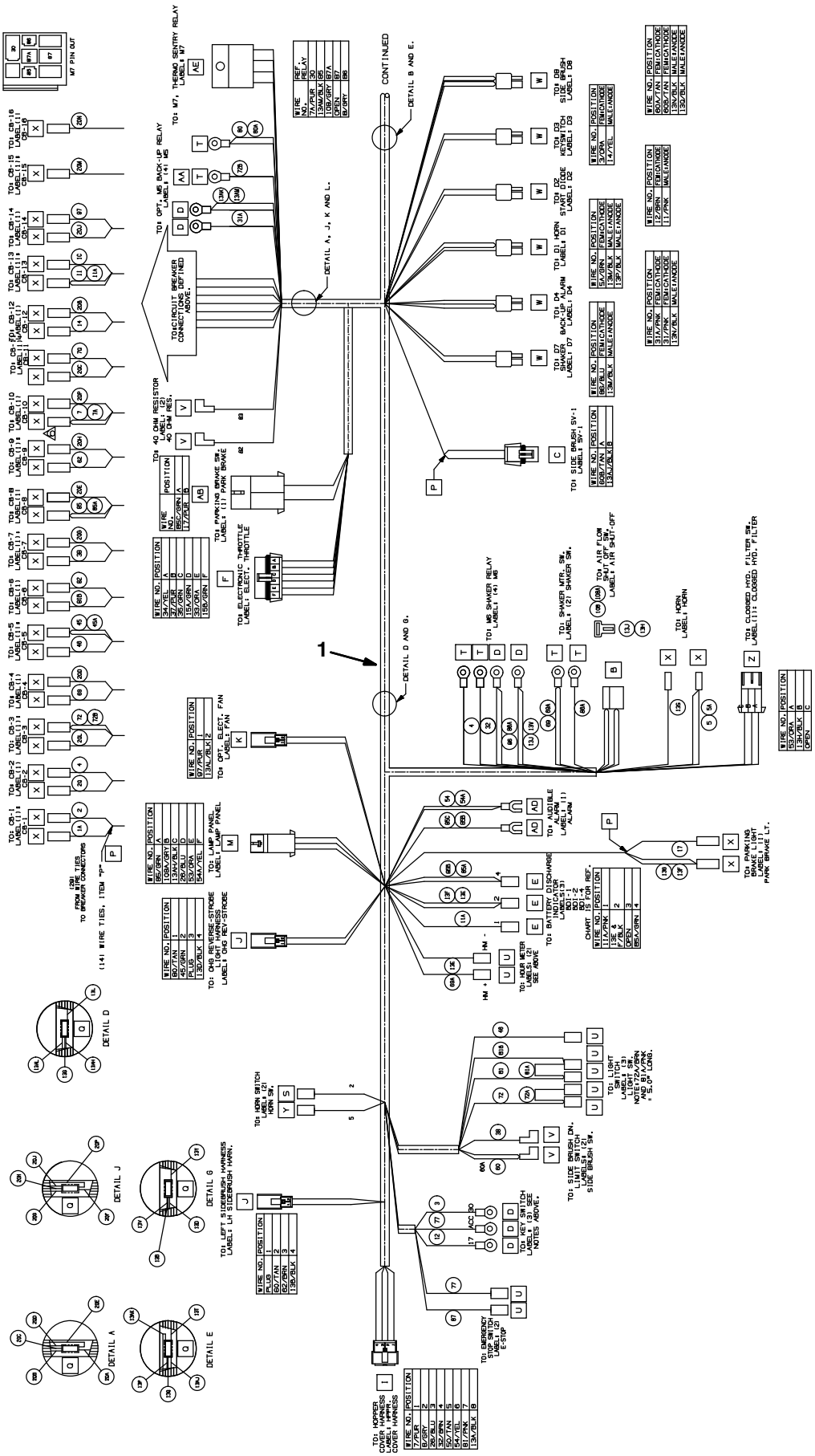

Fig. 39 – Electrical Wire Harnesses Group

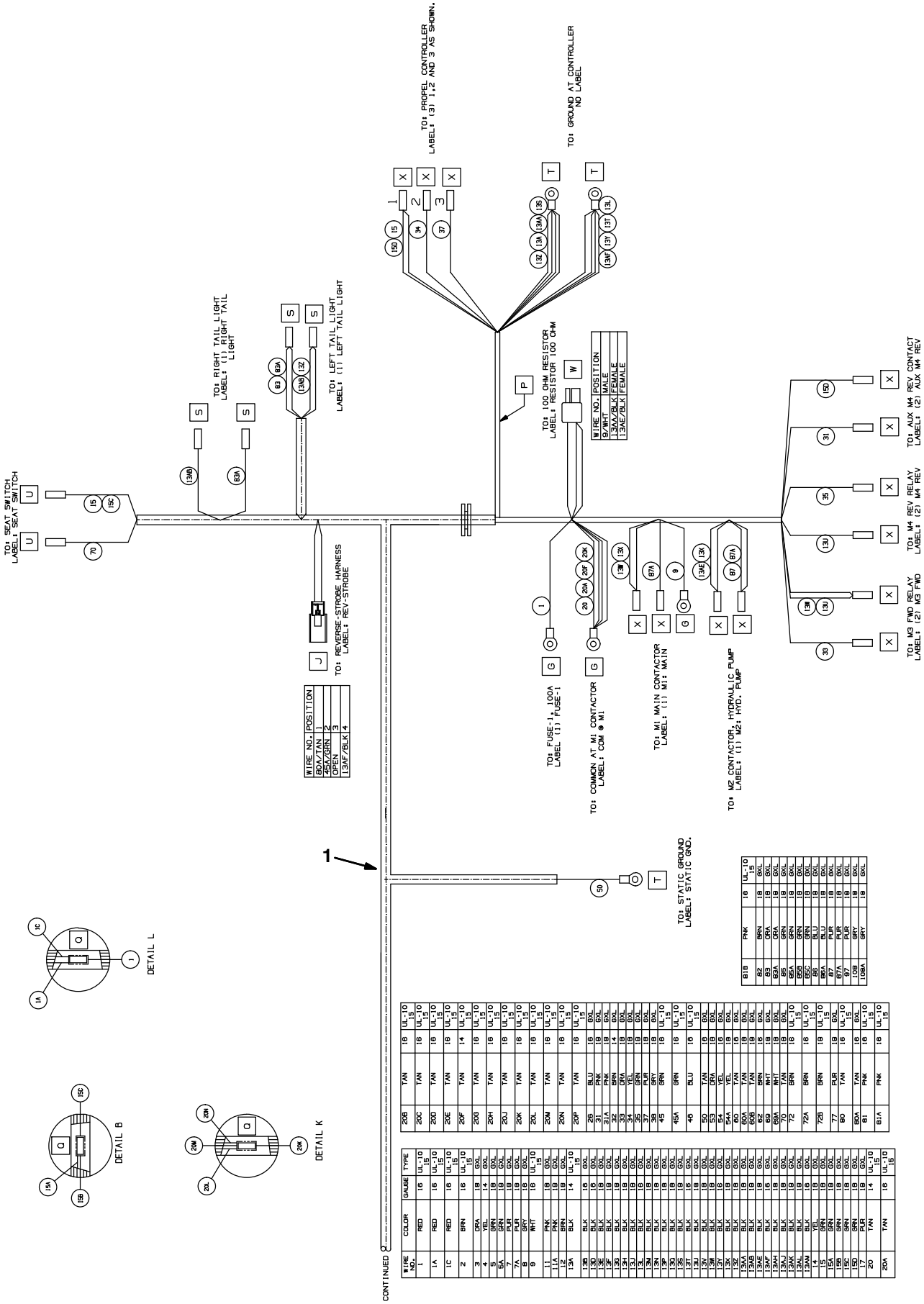

WIRE NO.	COLOR	GAUGE	TYPE
1	RED	16	UL-10 15
1A	RED	16	UL-10 15
1C	RED	16	UL-10 15
2	BRN	16	UL-10 15
3	ORA	18	GXL
4	YEL	14	GXL
5	GRN	18	GXL
5A	GRN	18	GXL
7	PUR	18	GXL
7A	PUR	18	GXL
8	GRY	18	GXL
9	WHT	16	UL-10 15
11	PNK	18	GXL
11A	PNK	18	GXL
12	BRN	18	GXL
13A	BLK	14	UL-10 15
13B	BLK	16	GXL
13E	BLK	16	GXL
13F	BLK	18	GXL
13G	BLK	18	GXL
13H	BLK	18	GXL
13J	BLK	18	GXL
13L	BLK	16	GXL
13M	BLK	18	GXL
13N	BLK	18	GXL
13P	BLK	18	GXL
13Q	BLK	16	UL-10 15
13S	BLK	18	GXL
13T	BLK	16	GXL
13U	BLK	18	GXL
13V	BLK	18	GXL
13W	BLK	18	GXL
13Y	BLK	16	GXL
13X	BLK	18	GXL
13Z	BLK	18	GXL
13AA	BLK	18	GXL
13AB	BLK	18	GXL
13AE	BLK	18	GXL
13AF	BLK	18	GXL
13AG	BLK	18	GXL
13AH	BLK	18	GXL
13AJ	BLK	18	GXL
13AK	BLK	18	GXL
13AL	BLK	18	GXL
13AM	BLK	18	GXL
14	YEL	18	GXL
15	BLK	18	GXL
15A	GRN	18	GXL
15B	GRN	18	GXL
15C	GRN	18	GXL
15D	GRN	18	GXL
17	PUR	18	GXL
20	TAN	14	UL-10 15
20A	TAN	16	UL-10 15
20B	TAN	16	UL-10 15
20C	TAN	16	UL-10 15
20D	TAN	16	UL-10 15
20E	TAN	16	UL-10 15
20F	TAN	14	UL-10 15
20G	TAN	16	UL-10 15
20H	TAN	16	UL-10 15
20J	TAN	16	UL-10 15
20K	TAN	16	UL-10 15
20L	TAN	16	UL-10 15
20M	TAN	16	UL-10 15
20N	TAN	16	UL-10 15
20P	TAN	16	UL-10 15
26	BLU	16	GXL
31	PNK	18	GXL
31A	PNK	18	GXL
32	BRN	14	GXL
33	ORA	18	GXL
34	YEL	18	GXL
35	GRN	18	GXL
37	PUR	18	GXL
38	GRY	18	GXL
45	GRN	16	UL-10 15
45A	GRN	16	UL-10 15
46	BLU	16	UL-10 15
50	TAN	16	GXL
53	ORA	18	GXL
54	YEL	16	GXL
54A	YEL	18	GXL
60	TAN	16	GXL
60A	TAN	18	GXL
60B	TAN	18	GXL
62	BRN	16	GXL
69	WHT	18	GXL
69A	WHT	18	GXL
70	TAN	18	GXL
72	BRN	16	UL-10 15
72A	BRN	16	UL-10 15
72B	BRN	18	UL-10 15
77	PUR	18	GXL
80	TAN	16	UL-10 15
80A	TAN	16	GXL
81	PNK	18	UL-10 15
81A	PNK	18	UL-10 15
81B	PNK	16	UL-10 15
82	BRN	18	GXL
83	ORA	18	GXL
83A	ORA	18	GXL
85	GRN	18	GXL
85A	GRN	18	GXL
85B	GRN	18	GXL
85C	GRN	18	GXL
86	BLU	18	GXL
86A	BLU	18	GXL
87	PUR	18	GXL
87A	PUR	18	GXL
87B	PUR	18	GXL
108	GRY	18	GXL
108A	GRY	18	GXL

Fig. 39 – Electrical Wire Harnesses Group

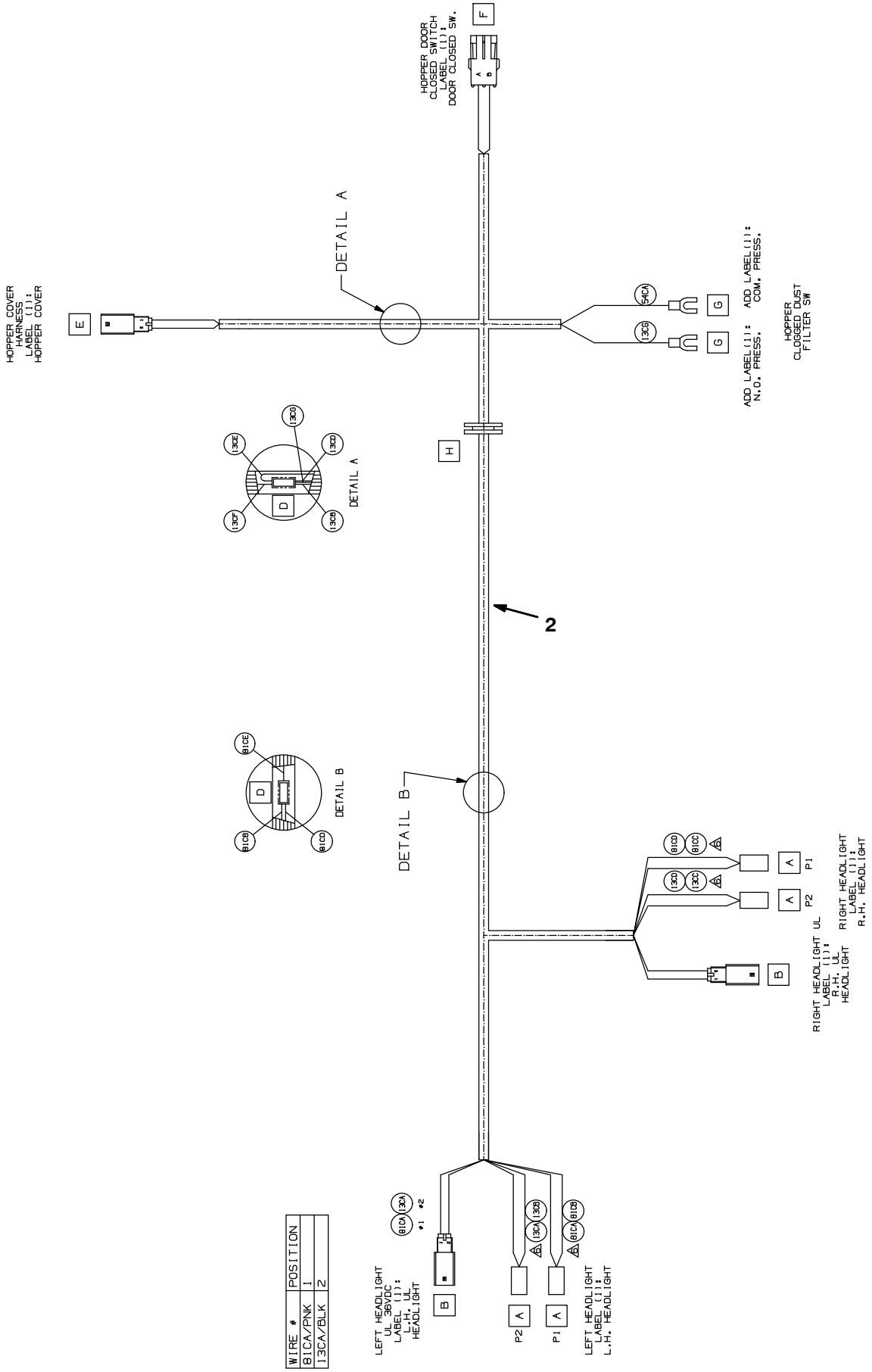

Fig. 39 – Electrical Wire Harnesses Group

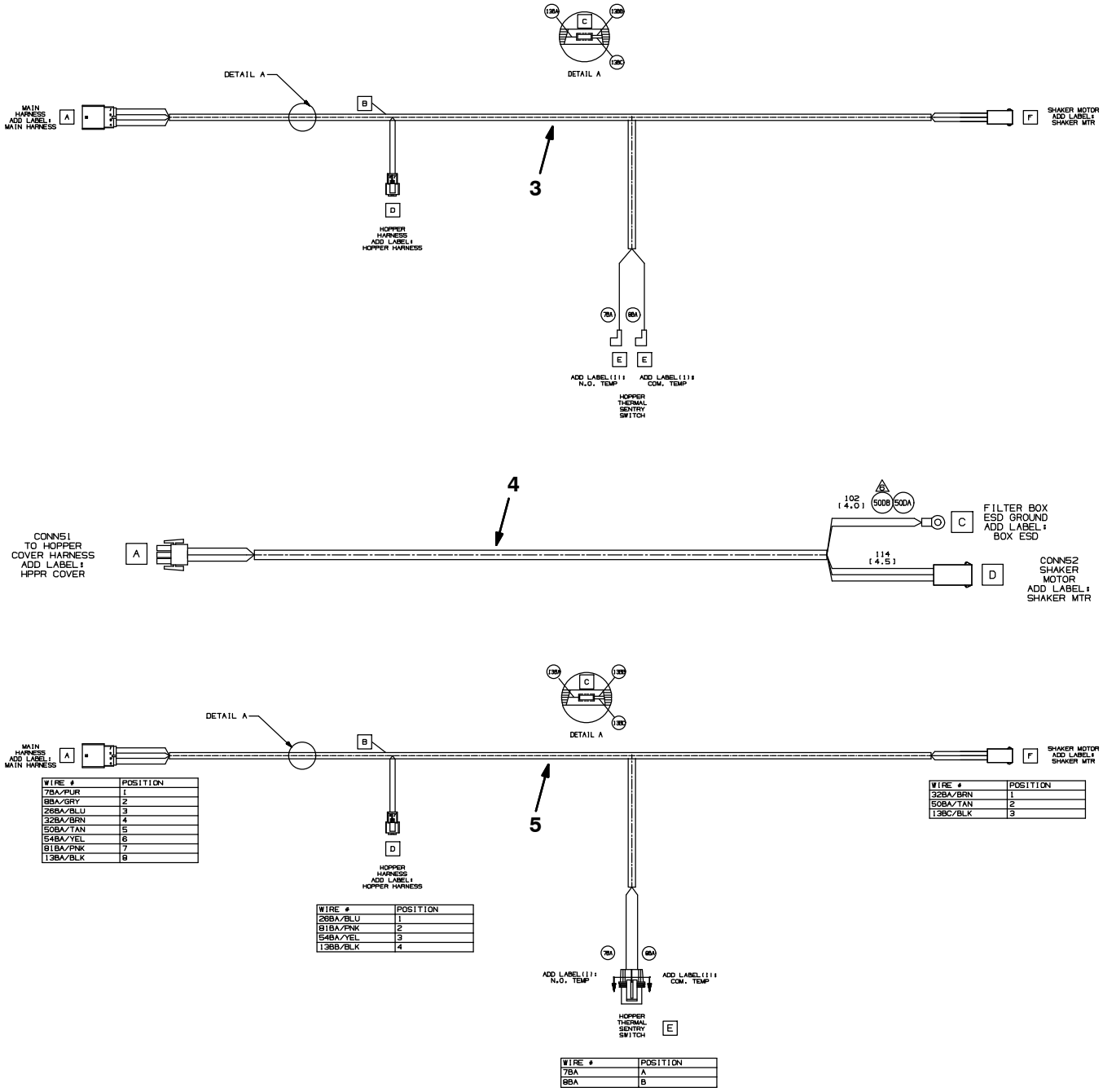

354990 – E, NA

Ref.	Part No.	Serial Number	Description	Qty.
1	9006699	(000000–001070)	Harness Kit, Main, Ele, Replmt [S20]	1
1	1056624	(001071–)	Harness, Main, Ele [S20]	1
2	1048529	(000000–)	Harness, Hppr, 36vdc [S20]	1
3	1048504	(000000–001361)	Harness, Hppr, Cover [S20]	1
4	1047717	(000000–)	Harness, Shakr, Motor [S20]	1
5	1061582	(001362–)	Harness, Hppr, Cover [S20]	1

Fig. 40 – Label Group

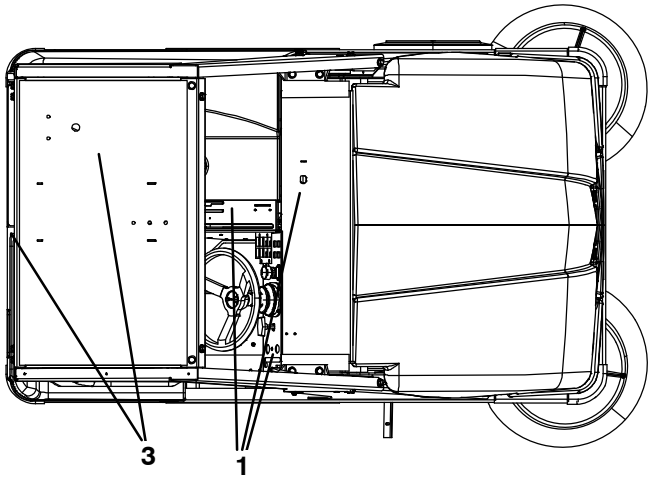

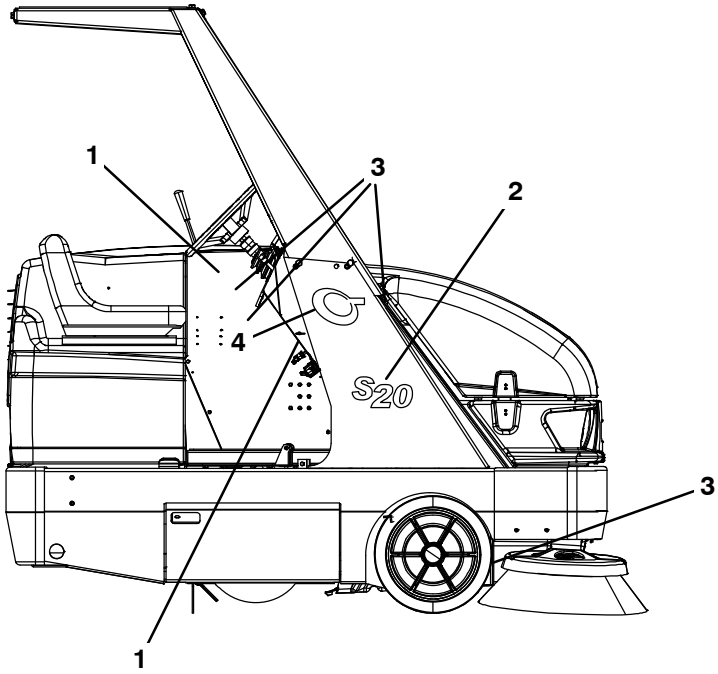

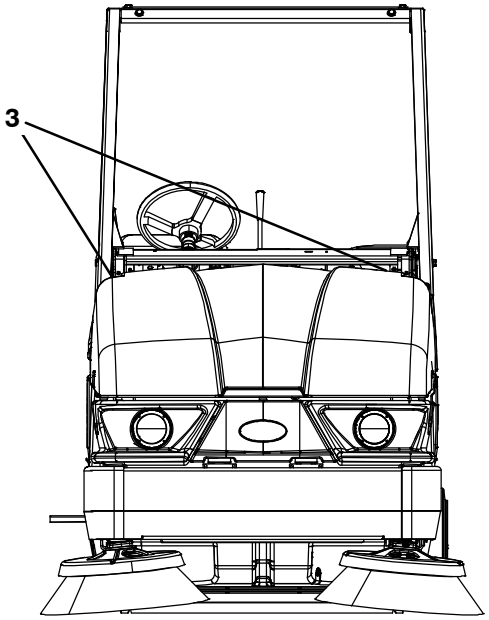

354978 – E

Ref.	Part No.	Serial Number	Description	Qty.
1	1050727	(000000–)	Label Set, Opertnl [S20 Ele]	1
2	1050170	(000000–)	Label, Model [S20]	1
3	1058333	(000000–)	Label Set, Info/Hzrd [S20]	1
4	1057977	(000000–)	Label [Cyclone, Sweepmax S20]	2

SECTION 3

Contents **Page**

Fig. 1 - Backup Alarm and Flashing Light Kit, Rear 3- 2
Fig. 2 - Backup Alarm and Strobe Light Kit, Rear 3- 4
Fig. 3 - Backup Alarm and Flashing Light Kit, Overhead Guard 3- 6
Fig. 4 - Backup Alarm and Strobe Light Kit, Overhead Guard 3- 8
Fig. 5 - Overhead Guard Kit 3- 10
Fig. 6 - Cab Overhead Guard Group 3- 12
Fig. 7 - Cab Frame and Windows Group 3- 14
Fig. 8 - Cab Door Group 3- 16
Fig. 9 - Deluxe Suspension Seat Kit 3- 18
Fig. 10 - Seat Belt Kit 3- 20
Fig. 11 - Corner Bumper Kit 3- 21
Fig. 12 - Dual Side Brush Lift Group, LH 3- 22
Fig. 13 - Dual Side Brush Motor and Pivot Group, LH 3- 24
Fig. 14 - Dual Side Brush Wire Harness Group 3- 26
Fig. 15 - Dual Side Brush Hydraulic Valve Group 3- 27
Fig. 16 - Dual Side Brush Hydraulic Hose Diagram 3- 28
Fig. 17 - Right Hand Side Brush Dust Control Kit (000000- 006329) 3- 30
Fig. 18 - Right Hand Side Brush Dust Control Kit (006330-) 3- 32
Fig. 19 - Dual Side Brush Dust Control Kit (000000- 006329) 3- 34
Fig. 20 - Dual Side Brush Dust Control Kit (006330-) 3- 36
Fig. 21 - Vacuum Wand Kit 3- 38
Fig. 22 - Fire Extinguisher Kit 3- 40
Fig. 23 - Battery Charger Group 3- 41
Fig. 24 - Battery Group, 36V 420Ah Wet 3- 42
Fig. 25 - Telemetry Group 3- 44
Fig. 26 - Battery Group, 36V 440Ah Wet C/6 . . 3- 46
Fig. 27 - Battery Kit, 36V 340Ah Wet C/6 . . . . . 3- 47
Fig. 28 - Wet Side Brush Dust Control Water Tank Group 3- 48
Fig. 29 - Wet Side Brush Dust Control Water Tank Retainer Group 3- 50
Fig. 30 - Wet Right Hand Side Brush Dust Control Spray Nozzle Group 3- 52
Fig. 31 - Wet Dual Side Brush Dust Control Spray Nozzle Group 3- 54
Fig. 32 - Wet Side Brush Dust Control Electrical Group 3- 56
Fig. 33 - Wet Side Brush Dust Control Wire Harness Group 3- 58
Fig. 34 - HEPA Filter Hopper Cover Group . . . 3- 60
Fig. 35 - HEPA Filter Box Group 3- 62

Contents **Page**

Fig. 36 - Spotlight Group, Blue 3- 64
Fig. 37 - Spotlight Wire Harnesses Group 3- 66
Fig. 38 - Weather Proof Pouch Group 3- 67
Fig. 39 - Tow Hook Kit (007663-) 3- 68
Fig. 40 - Documentation Group (Online Only) . 3- 69

Fig. 1 – Backup Alarm and Flashing Light Kit, Rear

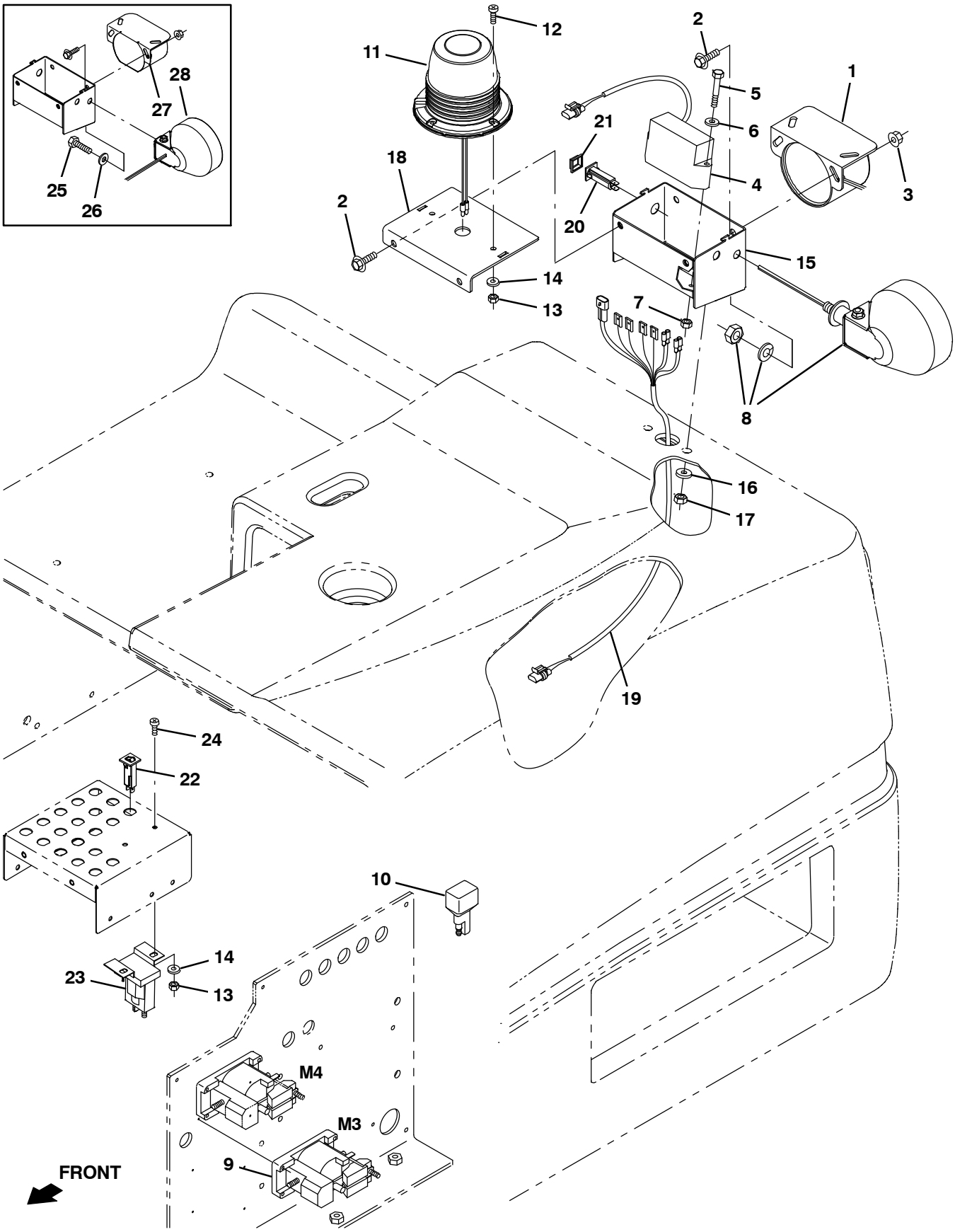

354996– E, NA

Fig. 1 – Backup Alarm and Flashing Light Kit, Rear

	Ref.	Part No.	Serial Number	Description	Qty.
▽		9006315	(000000–)	Alarm Kit, Backup, Flsh, Rear, Ev, Ci	1
▲	1	9007131	(001490–)	Alarm Assy, Backup, 12/48vdc	1
▲	2	1037346	(000000–)	Screw, Hex, M8 X 1.25 X 25, 9.8, Sems	4
▲	3	07791	(000000–)	Nut, Hex, Flng, M8 X 1.25	2
▲	4	72164	(000000–)	Flasher, 12/48vdc 5a [6309/12–48v]	1
▲	5	06949	(000000–)	Screw, Hex, M6 X 1.00 X 50, 8.8	2
▲	6	32483	(000000–)	Washer, Flat, 0.25, Sae	2
▲	7	08708	(000000–)	Nut, Hex, Lock, M6 X 1.00, Nl	2
▲	8	1072011	(000000–)	Light, Led, 36vdc, 4.8d [Sealed Beam]	1
▲		50470	(000000–)	Terminal, Qf, .25 16–14ga, Blu, F–Ins	2
▲	9	86377	(000000–)	Contactor, 36vdc [Spco]	1
▲	10	222290	(000000–)	Diode, Ele, Plug	1
▲	11	1254294	(000000–)	Light, Strobe, Amb, Led	1
▲	12	06933	(000000–)	Screw, Pan, Phl, M5 X 0.80 X 16, 4.8	2
▲	13	06549	(000000–)	Nut, Hex, Lock, M5 X 0.80, Nl	4
▲	14	19066	(000000–)	Washer, Flat, 10	4
▲	15	1049554	(000000–)	Angle, Mtg, Alarm	1
▲	16	32491	(000000–)	Washer, Flat, 0.31, Std	2
▲	17	08709	(000000–)	Nut, Hex, Lock, M8 X 1.25, Nl	2
▲	18	1049553	(000000–)	Plate, Mtg, Light	1
▲	19	1052474	(000000–)	Harness, Alarm / Strobe, 36vdc [S20]	1
▲	20	1064185	(000000–)	Circuitbreaker, 05.0a, Resetable	1
▲	21	1064191	(000000–)	Boot, Circuitbreaker	1
▲	22	1064184	(000000–)	Circuitbreaker, 2.5a, Resetable	1
▲	23	386810	(000000–)	Contactor, 36vdc, 100a, Sp, No	1
▲	24	09200	(000000–)	Screw, Pan, Phl, M5 X 0.80 X 12, Ss	2
	25	39807	(000000– xxxxxx)	Screw, Hex, .50–13 X 0.75, G5	1
	26	32486	(000000– xxxxxx)	Washer Flat,0.50,Sae	1
	27	72171	(000000–001489)	Alarm Assy, Backup, 12–48vdc 82–102dba	1
	28	45391	(000000– xxxxxx)	Headlight, 36vdc, 60watt 1.7a	1

Fig. 2 – Backup Alarm and Strobe Light Kit, Rear

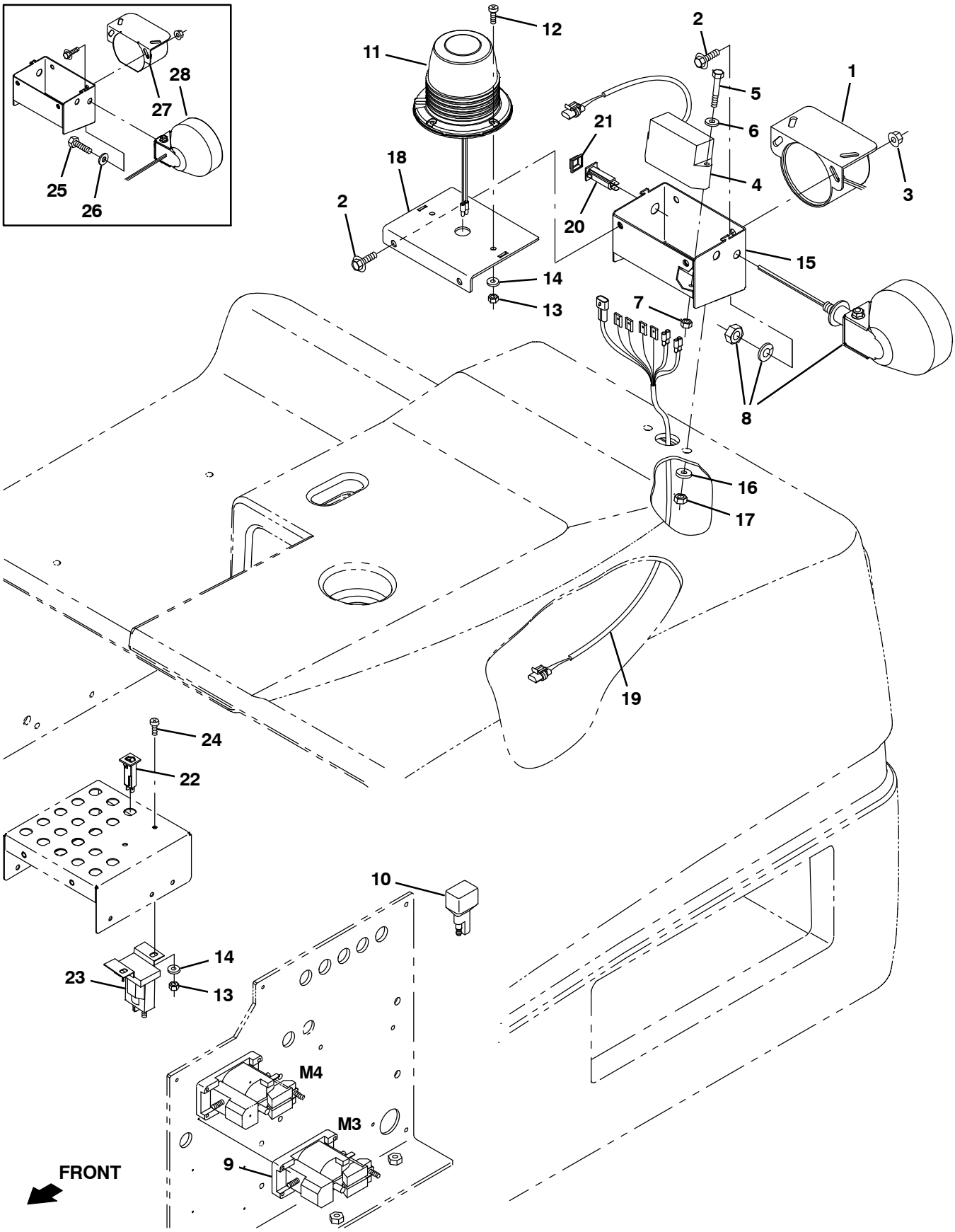

354996– E

Fig. 2 – Backup Alarm and Strobe Light Kit, Rear

	Ref.	Part No.	Serial Number	Description	Qty.
▽		9006317	(000000–)	Alarm Kit, Backup, Strb, Rear, Ev, Ci	1
▲	1	9007131	(001490–)	Alarm Assy, Backup, 12/48vdc	1
▲	2	1037346	(000000–)	Screw, Hex, M8 X 1.25 X 25, 9.8, Sems	6
▲	3	07791	(000000–)	Nut, Hex, Flng, M8 X 1.25	2
▲	4	72164	(000000–)	Flasher, 12/48vdc 5a [6309/12–48v]	1
▲	5	06949	(000000–)	Screw, Hex, M6 X 1.00 X 50, 8.8	2
▲	6	32483	(000000–)	Washer, Flat, 0.25, Sae	2
▲	7	08708	(000000–)	Nut, Hex, Lock, M6 X 1.00, Nl	2
▲	8	1072011	(000000–)	Light, Led, 36vdc, 4.8d [Sealed Beam]	1
▲		50470	(000000–)	Terminal, Qf, .25 16–14ga, Blu, F–Ins	2
▲	9	86377	(000000–)	Contactor, 36vdc [Spco]	1
▲	10	222290	(000000–)	Diode, Ele, Plug	1
▲	11	1254294	(000000–)	Light, Strobe, Amb, Led	1
▲	12	06933	(000000–)	Screw, Pan, Phl, M5 X 0.80 X 16, 4.8	2
▲	13	06549	(000000–)	Nut, Hex, Lock, M5 X 0.80, Nl	4
▲	14	19066	(000000–)	Washer, Flat, 10	4
▲	15	1049554	(000000–)	Angle, Mtg, Alarm	1
▲	16	32491	(000000–)	Washer, Flat, 0.31, Std	2
▲	17	08709	(000000–)	Nut, Hex, Lock, M8 X 1.25, Nl	2
▲	18	1049553	(000000–)	Plate, Mtg, Light	1
▲	19	1052474	(000000–)	Harness, Alarm / Strobe, 36vdc [S20]	1
▲	20	1064185	(000000–)	Circuitbreaker, 05.0a, Resetable	1
▲	21	1064191	(000000–)	Boot, Circuitbreaker	1
▲	22	1064184	(000000–)	Circuitbreaker, 2.5a, Resetable	1
▲	23	386810	(000000–)	Contactor, 36vdc, 100a, Sp, No	1
▲	24	09200	(000000–)	Screw, Pan, Phl, M5 X 0.80 X 12, Ss	2
	25	39807	(000000– xxxxxx)	Screw, Hex, .50–13 X 0.75, G5	1
	26	32486	(000000– xxxxxx)	Washer Flat,0.50,Sae	1
	27	72171	(000000–001489)	Alarm Assy, Backup, 12–48vdc 82–102dba	1
	28	45391	(000000– xxxxxx)	Headlight, 36vdc, 60watt 1.7a	1

Fig. 3 – Backup Alarm and Flashing Light Kit, Overhead Guard

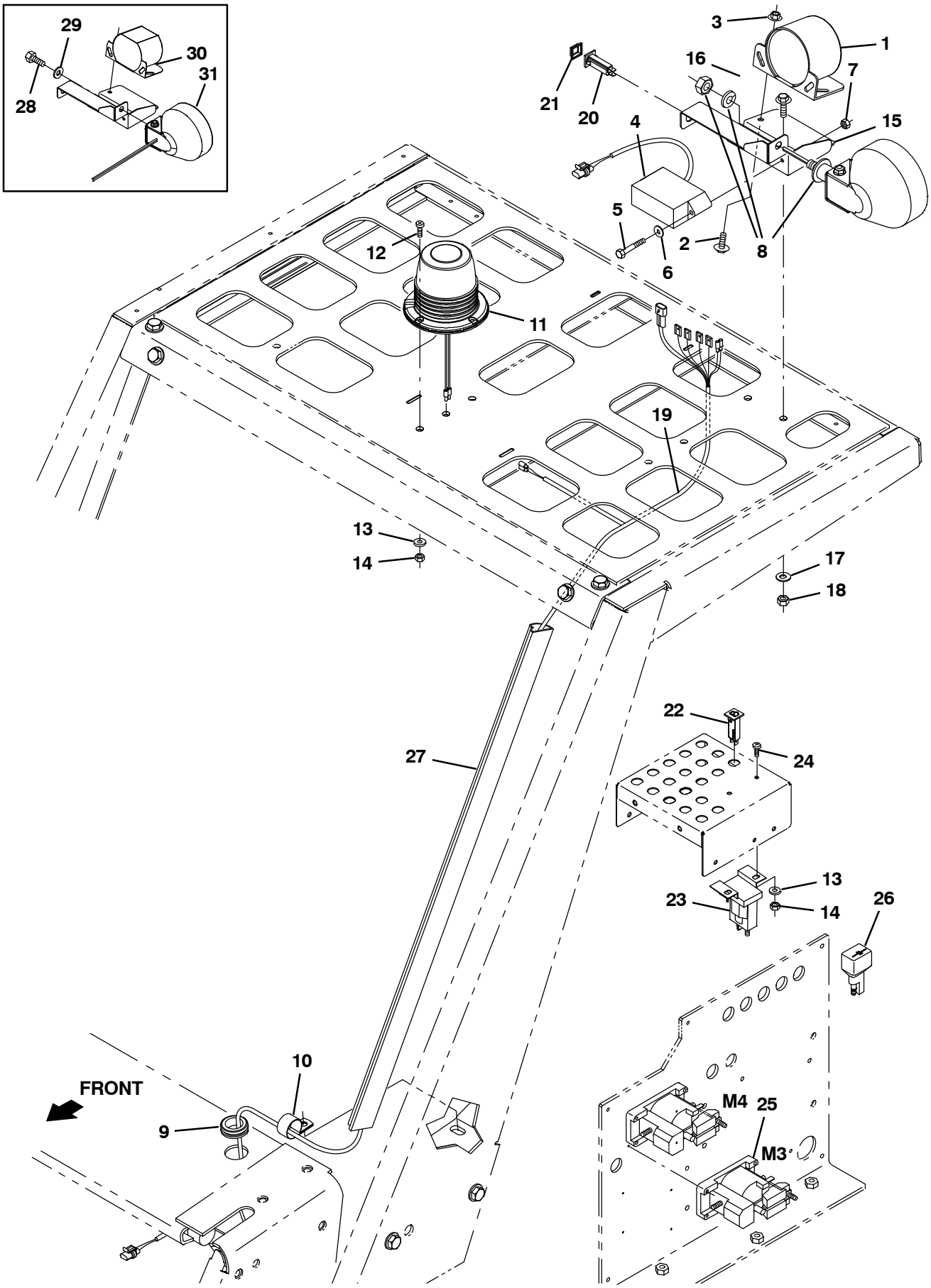

354997 – E

Fig. 3 – Backup Alarm and Flashing Light Kit, Overhead Guard

	Ref.	Part No.	Serial Number	Description	Qty.
▽		9006316	(000000–)	Alarm Kit, Backup, Flsh, Ohg, Ev, Ci	1
▲	1	9007131	(001490–)	Alarm Assy, Backup, 12/48vdc	1
▲	2	1037346	(000000–)	Screw, Hex, M8 X 1.25 X 25, 9.8, Sems	2
▲	3	07791	(000000–)	Nut, Hex, Flng, M8 X 1.25	2
▲	4	72164	(000000–)	Flasher, 12/48vdc 5a [6309/12–48v]	1
▲	5	06949	(000000–)	Screw, Hex, M6 X 1.00 X 50, 8.8	2
▲	6	32483	(000000–)	Washer, Flat, 0.25, Sae	2
▲	7	08708	(000000–)	Nut, Hex, Lock, M6 X 1.00, Nl	2
▲	8	1072011	(000000–)	Light, Led, 36vdc, 4.8d [Sealed Beam]	1
▲		50470	(000000–)	Terminal, Qf, .25 16–14ga, Blu, F–Ins	2
▲	9	10632–1	(001292–)	Grommet, Rbr, 1.06id, F/1.4h, .19 Matl	1
▲	10	58366	(001292–)	Clamp, Cable, Stl, 1.25d X 1.00w, 1hole	1
▲	11	1254294	(000000–)	Light, Strobe, Amb, Led	1
▲	12	06933	(000000–)	Screw, Pan, Phl, M5 X 0.80 X 16, 4.8	2
▲	13	19066	(000000–)	Washer, Flat, 10	4
▲	14	06549	(000000–)	Nut, Hex, Lock, M5 X 0.80, Nl	4
▲	15	1050046	(000000–)	Bracket, Mtg, Horn	1
▲	16	1020341	(000000–)	Screw, Hex, M8 X 1.25 X 20, Ss, Sems	2
▲	17	32491	(000000–)	Washer, Flat, 0.31, Std	2
▲	18	08709	(000000–)	Nut, Hex, Lock, M8 X 1.25, Nl	2
▲	19	1052475	(000000–)	Harness, Alarm / Strobe, Ohg, 36vdc[S20]	1
▲	20	1064185	(000000–)	Circuitbreaker, 05.0a, Resetable	1
▲	21	1064191	(000000–)	Boot, Circuitbreaker	1
▲	22	1064184	(000000–)	Circuitbreaker, 2.5a, Resetable	1
▲	23	386810	(000000–)	Contactor, 36vdc, 100a, Sp, No	1
▲	24	09200	(000000–)	Screw, Pan, Phl, M5 X 0.80 X 12, Ss	2
▲	25	86377	(000000–)	Contactor, 36vdc [Spco]	1
▲	26	222290	(000000–)	Diode, Ele, Plug	1
▲	27	55034	(000000–)	Duct, Vyl, 0.74 X 1.50 .75d Max 48.0l	1
	28	39807	(000000– xxxxxx)	Screw, Hex, .50–13 X 0.75, G5	1
	29	32486	(000000– xxxxxx)	Washer Flat,0.50,Sae	1
	30	72171	(000000–001489)	Alarm Assy, Backup, 12–48vdc 82–102dba	1
	31	45391	(000000– xxxxxx)	Headlight, 36vdc, 60watt 1.7a	1

Fig. 4 – Backup Alarm and Strobe Light Kit, Overhead Guard

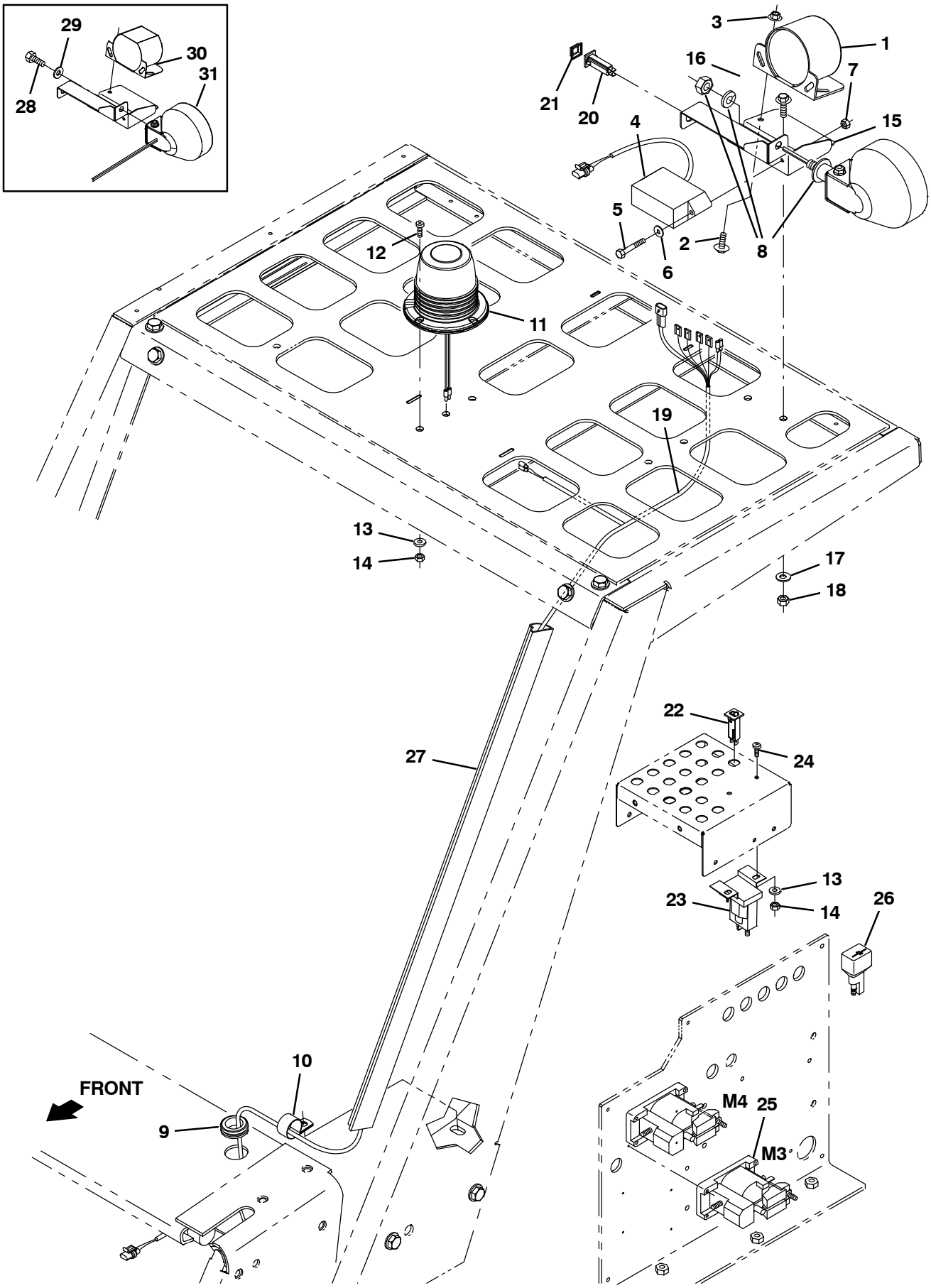

354997 – E

Fig. 4 – Backup Alarm and Strobe Light Kit, Overhead Guard

	Ref.	Part No.	Serial Number	Description	Qty.
▽		9006318	(000000–)	Alarm Kit, Backup, Strobe, Ohg, Ev, Ci	1
▲	1	9007131	(001490–)	Alarm Assy, Backup, 12/48vdc	1
▲	2	1037346	(000000–)	Screw, Hex, M8 X 1.25 X 25, 9.8, Sems	2
▲	3	07791	(000000–)	Nut, Hex, Flng, M8 X 1.25	2
▲	4	72164	(000000–)	Flasher, 12/48vdc 5a [6309/12–48v]	1
▲	5	06949	(000000–)	Screw, Hex, M6 X 1.00 X 50, 8.8	2
▲	6	32483	(000000–)	Washer, Flat, 0.25, Sae	2
▲	7	08708	(000000–)	Nut, Hex, Lock, M6 X 1.00, Nl	2
▲	8	1072011	(000000–)	Light, Led, 36vdc, 4.8d [Sealed Beam]	1
▲		50470	(000000–)	Terminal, Qf, .25 16–14ga, Blu, F–Ins	2
▲	9	10632–1	(001292–)	Grommet, Rbr, 1.06id, F/1.4h, .19 Matl	1
▲	10	58366	(001292–)	Clamp, Cable, Stl, 1.25d X 1.00w, 1hole	1
▲	11	1254294	(000000–)	Light, Strobe, Amb, Led	1
▲	12	06933	(000000–)	Screw, Pan, Phl, M5 X 0.80 X 16, 4.8	2
▲	13	19066	(000000–)	Washer, Flat, 10	4
▲	14	06549	(000000–)	Nut, Hex, Lock, M5 X 0.80, Nl	4
▲	15	1050046	(000000–)	Bracket, Mtg, Horn	1
▲	16	1020341	(000000–)	Screw, Hex, M8 X 1.25 X 20, Ss, Sems	2
▲	17	32491	(000000–)	Washer, Flat, 0.31, Std	2
▲	18	08709	(000000–)	Nut, Hex, Lock, M8 X 1.25, Nl	2
▲	19	1052475	(000000–)	Harness, Alarm / Strobe, Ohg, 36vdc[S20]	1
▲	20	1064185	(000000–)	Circuitbreaker, 05.0a, Resetable	1
▲	21	1064191	(000000–)	Boot, Circuitbreaker	1
▲	22	1064184	(000000–)	Circuitbreaker, 2.5a, Resetable	1
▲	23	386810	(000000–)	Contactor, 36vdc, 100a, Sp, No	1
▲	24	09200	(000000–)	Screw, Pan, Phl, M5 X 0.80 X 12, Ss	2
▲	25	86377	(000000–)	Contactor, 36vdc [Spco]	1
▲	26	222290	(000000–)	Diode, Ele, Plug	1
▲	27	55034	(000000–)	Duct, Vyl, 0.74 X 1.50 .75d Max 48.0l	1
	28	39807	(000000– xxxxxx)	Screw, Hex, .50–13 X 0.75, G5	1
	29	32486	(000000– xxxxxx)	Washer Flat,0.50,Sae	1
	30	72171	(000000–001489)	Alarm Assy, Backup, 12–48vdc 82–102dba	1
	31	45391	(000000– xxxxxx)	Headlight, 36vdc, 60watt 1.7a	1

Fig. 5 – Overhead Guard Kit

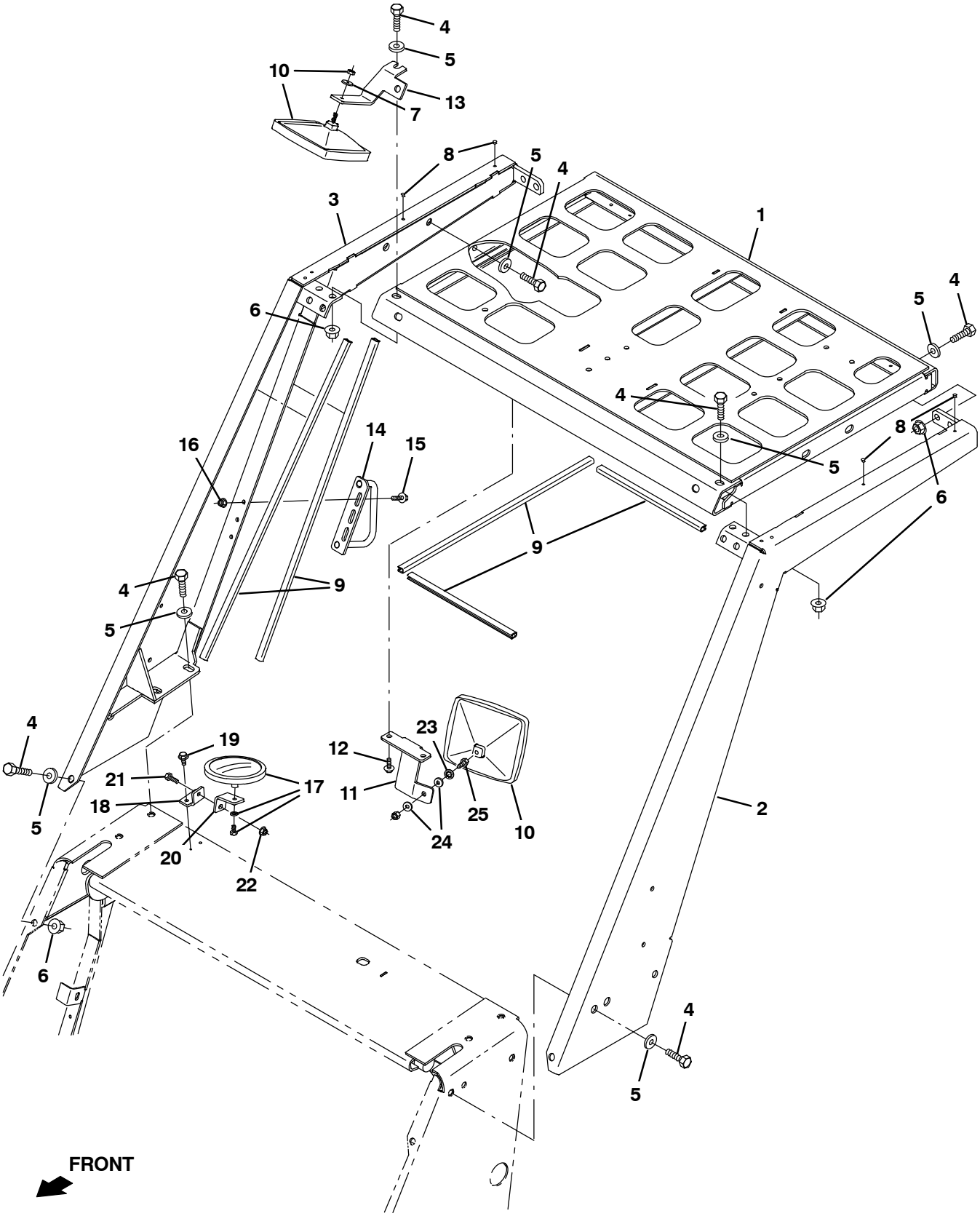

356023 – ALL

Fig. 5 – Overhead Guard Kit

	Ref.	Part No.	Serial Number	Description	Qty.
▽		9006015	(000000–)	Ohg Kit, Ci [S20]	1
▲	1	1057585	(000000–)	Panel Wldt, Top, Ohg	1
▲	2	1047704	(000000–)	Channel Wldt, Ohg, Lh	1
▲	3	1047705	(000000–)	Channel Wldt, Ohg, Rh	1
▲	4	41346	(000000–)	Screw, Hex, M12 X 1.75 X 30, 8.8	22
▲	5	32486	(000000–)	Washer Flat,0.50,Sae	22
▲	6	07793	(000000–)	Nut, Hex, Flng, M12 X 1.75	10
▲	7	32491	(000000–)	Washer, Flat, 0.31, Std	2
▲	8	379000	(000000–)	Plug, Hole, Rnd, 0.22H .00–.06, Blk Nyl	4
▲	9	1046406	(000000–)	Molding, Afmkt, Trim, Pvc, .18 .31, 08Ft	1
▲	10	49034	(000000–)	Mirror, Convex, 06.7 X 06.2	2
▲	11	1047480	(000000–)	Bracket, Mtg, Mirror	1
▲	12	763045	(000000–)	Screw, Hex, M8 X 1.25 X 20, Fmg	2
▲	13	1049992	(000000–)	Bracket, Mtg, Mirror, Top	1
▲	14	1055757	(000000–)	Handle Wldt, Door	1
▲	15	1037354	(000000–)	Screw, Hex, M8 X 1.25 X 30, 9.8, Sems	3
▲	16	07791	(000000–)	Nut, Hex, Flng, M8 X 1.25	3
▲	17	1053233	(000000–)	Mirror, Flat, 05.0d	1
▲	18	1049990	(000000–)	Bracket, Mtg, Mirror, Brush	1
▲	19	361339	(000000–)	Screw, Hex, M6 X 1.00 X 16, Fmg	2
▲	20	1049991	(000000–)	Bracket, Mtg, Mirror, Brush	1
▲	21	06943	(000000–)	Screw, Hex, M6 X 1.00 X 20, 8.8	1
▲	22	08708	(000000–)	Nut, Hex, Lock, M6 X 1.00, Nl	1
▲	23	32984	(000000–)	Washer, Lock, Int, 0.31	1
▲	24	19066	(000000–)	Washer, Flat, 0.25b 0.56d .05, Pl, 10	2
▲	25	54396	(000000–)	Screw, Hex, .31–18 X 0.75, G5	1

Fig. 6 – Cab Overhead Guard Group

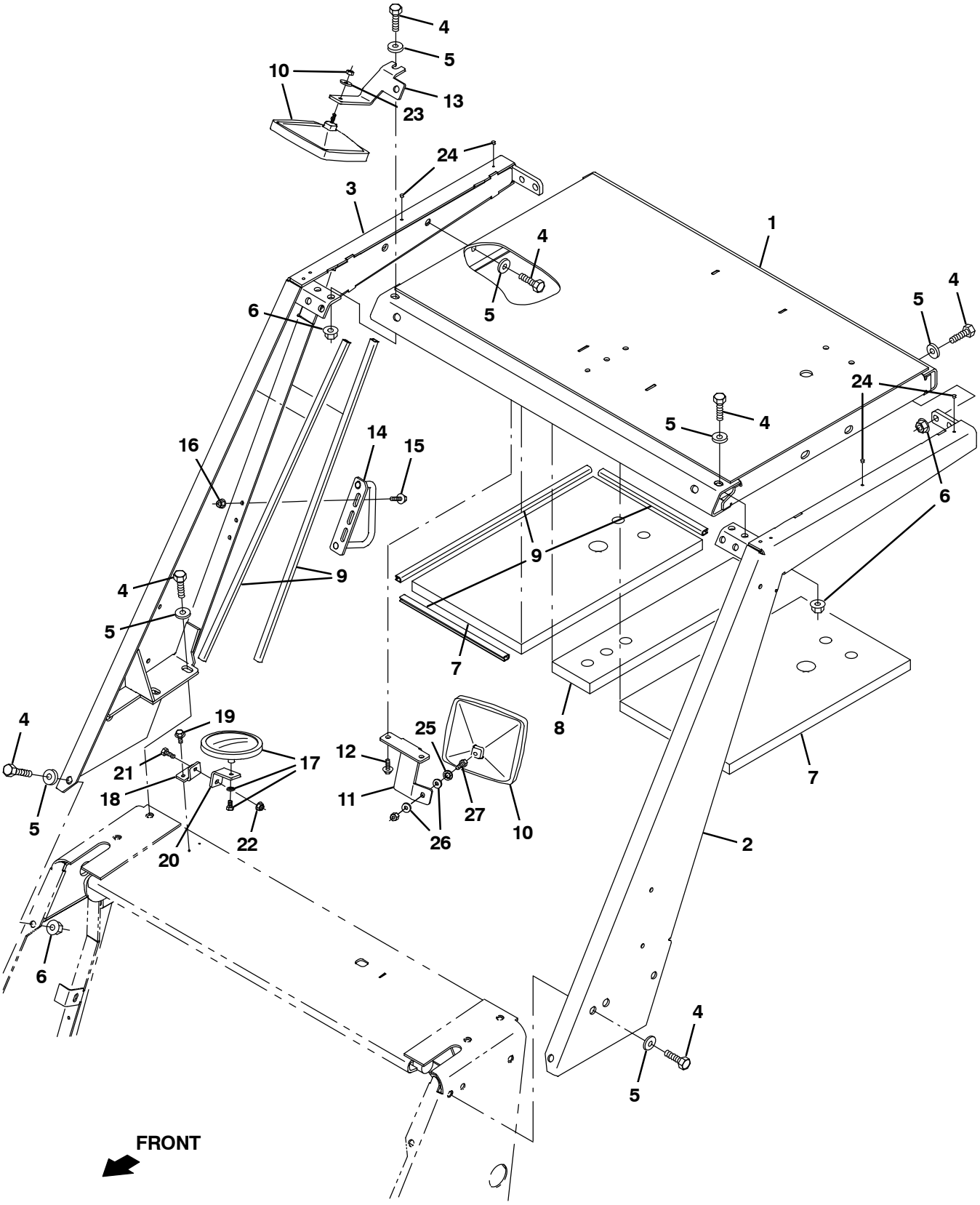

354974 – ALL

Fig. 6 – Cab Overhead Guard Group

NOTE: Cab Kit (including OHG), Tennant Part Number 9006304, includes; Fig. 6, Fig. 7 and Fig. 8.

Ref.	Part No.	Serial Number	Description	Qty.
1	1044075	(000000–)	Panel Wldt, Top, Ohg	1
2	1047704	(000000–)	Channel Wldt, Ohg, Lh	1
3	1047705	(000000–)	Channel Wldt, Ohg, Rh	1
4	41346	(000000–)	Screw, Hex, M12 X 1.75 X 30, 8.8	22
5	32486	(000000–)	Washer Flat,0.50,Sae	22
6	07793	(000000–)	Nut, Hex, Flng, M12 X 1.75	10
7	1049937	(000000–)	Insulation, Acstc	2
8	1049938	(000000–)	Insulation, Acstc	1
9	1046406	(000000–)	Molding, Afmkt, Trim, Pvc, .18 .31, 08Ft	1
10	49034	(000000–)	Mirror, Convex, 06.7 X 06.2	2
11	1047480	(000000–)	Bracket, Mtg, Mirror	1
12	763045	(000000–)	Screw, Hex, M8 X 1.25 X 20, Fmg	2
13	1049992	(000000–)	Bracket, Mtg, Mirror, Top	1
14	1055757	(000000–)	Handle Wldt, Door	1
15	1037354	(000000–)	Screw, Hex, M8 X 1.25 X 30, 9.8, Sems	3
16	07791	(000000–)	Nut, Hex, Flng, M8 X 1.25	3
17	1053233	(000000–)	Mirror, Flat, 05.0d	1
18	1049990	(000000–)	Bracket, Mtg, Mirror, Brush	1
19	361339	(000000–)	Screw, Hex, M6 X 1.00 X 16, Fmg	2
20	1049991	(000000–)	Bracket, Mtg, Mirror, Brush	1
21	06943	(000000–)	Screw, Hex, M6 X 1.00 X 20, 8.8	1
22	08708	(000000–)	Nut, Hex, Lock, M6 X 1.00, Nl	1
23	32491	(000000–)	Washer, Flat, 0.31, Std	2
24	379000	(000000–)	Plug, Hole, Rnd, 0.22H .00–.06, Blk Nyl	4
25	32984	(000000–)	Washer, Lock, Int, 0.31	1
26	19066	(000000–)	Washer, Flat, 0.25b 0.56d .05, Pl, 10	2
27	54396	(000000–)	Screw, Hex, .31–18 X 0.75, G5	1

Fig. 7 – Cab Frame and Windows Group

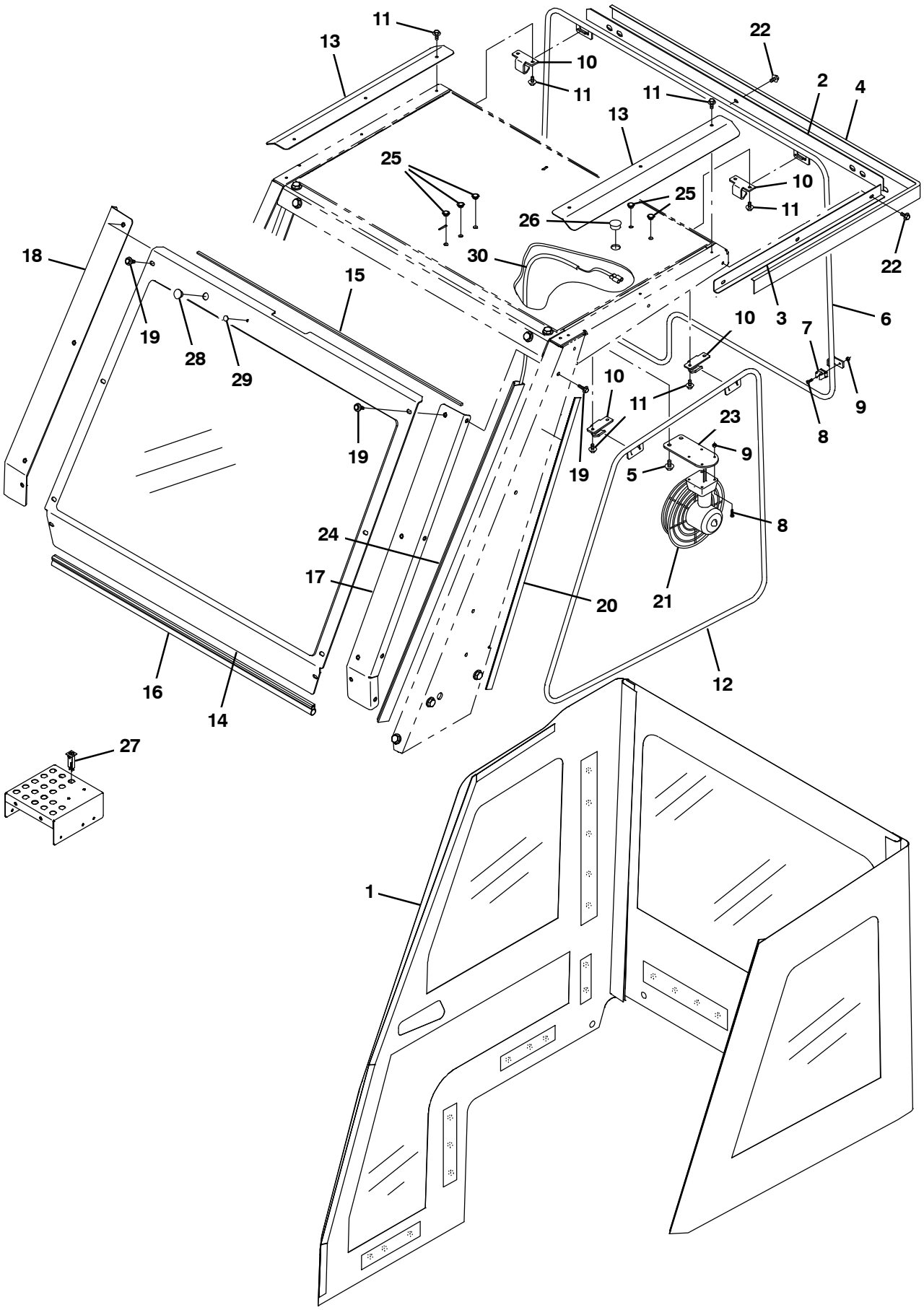

354998 – E, NA

Fig. 7 – Cab Frame and Windows Group

NOTE: Cab Kit (For machines equipped with OHG), Tennant Part Number 9006308, includes; Fig. 7 and Fig. 8.
NOTE: Cab Kit (including OHG), Tennant Part Number 9006306, includes; Fig. 6, Fig. 7 and Fig. 8.

Ref.	Part No.	Serial Number	Description	Qty.
1	1049702	(000000–)	Panel Assy, Cab	1
2	1064550	(001966–)	Angle, Cab, Rear [Drip Ledge, S20]	1
3	1064551	(001966–)	Angle, Cab, Side [Drip Ledge, S20]	1
4	312584	(001966–)	Seal, Lip [76038ddur]	1
5	763045	(000000–)	Screw, Hex, M8 X 1.25 X 20, Fmg	2
6	1047690	(000000–)	Panel Wldt, Frame, Rear	1
7	1047592	(000000–)	Clip, Grip, Pipe, 0.50, Plstc	1
8	06927	(000000–)	Screw, Pan, Phl, M4 X 0.70 X 16, 4.8	5
9	02850	(000000–)	Nut, Hex, Lock, M4 X 0.70, Nl	4
10	1047653	(000000–)	Bracket, Mtg, Panel, Cab	4
11	361339	(000000–)	Screw, Hex, M6 X 1.00 X 16, Fmg	14
12	1047456	(000000–)	Panel Wldt, Frame, Cab	1
13	1047706	(000000–)	Plate, Shield, Top	2
14	1048849	(000000–)	Pane Assy, Windshield	1
15	1055606	(000000–)	Seal, .19, .25w 39.2l, Adh	1
16	1031617	(000000–)	Seal, Afmkt, Bulb, Str, .75d F/07ga 08ft	1
17	1045567	(000000–)	Angle, Mtg, Wndw, Lh	1
18	1045569	(000000–)	Angle, Mtg, Wndw, Rh	1
19	1037346	(000000–)	Screw, Hex, M8 X 1.25 X 25, 9.8, Sems	16
20	314012	(000000–)	Tape, Hook, 1.0w [Velcro]	1
21	1050255	(000000–)	Fan, Defroster, 36vdc, 07.9d	1
22	361339	(001966–)	Screw, Hex, M6 X 1.00 X 16, Fmg	4
23	1050266	(000000–)	Bracket, Mtg, Fan, Ev	1
24	55034	(000000–)	Duct, Vyl, 0.74 X 1.50 .75d Max 48.0l	1
25	361346	(000000–)	Plug, Hole, Rnd, 0.38h .3l, Plstc	5
26	1053385	(000000–)	Plug, Hole, Rnd, 1.00h .14–.25, Blk Nyl	1
27	1064184	(000000–)	Circuitbreaker, 2.5a, Resetable	1
28	75428	(000000–)	Plug, Hole, Rnd, 0.75h .03–.12, Blk Nyl	1
29	1054368	(000000–)	Plug, Hole, Rnd, 0.25h .03–.12, Blk Nyl	1
30	1050162	(000000–)	Harness, Fan, Ic [S20]	1

Fig. 8 – Cab Door Group

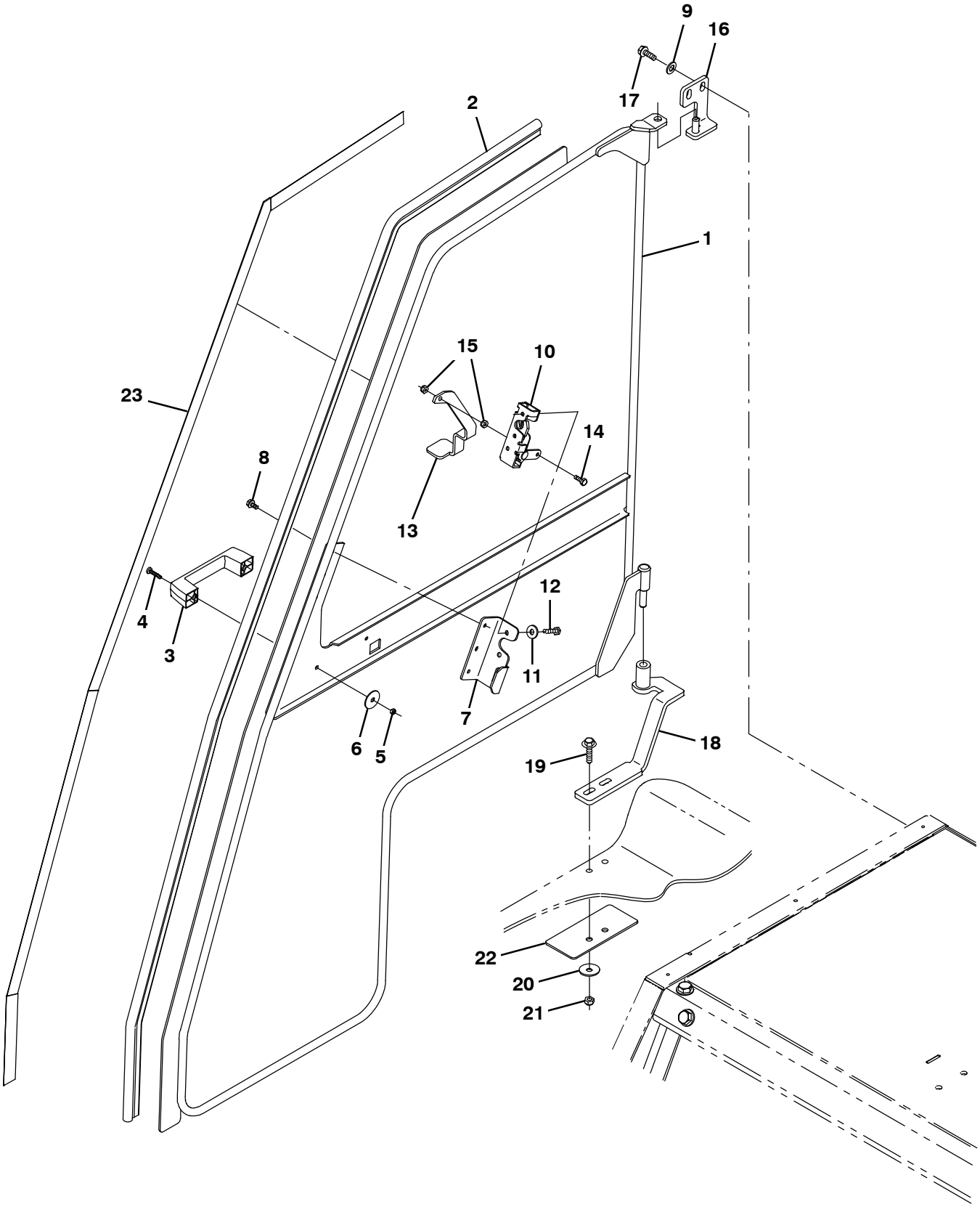

354983 – ALL

Fig. 8 – Cab Door Group

NOTE: Cab Kit (For machines equipped with OHG), Tennant Part Number 9006308, includes; Fig. 7 and Fig. 8.
NOTE: Cab Kit (including OHG), Tennant Part Number 9006306, includes; Fig. 6, Fig. 7 and Fig. 8.

Ref.	Part No.	Serial Number	Description	Qty.
1	1045404	(000000–)	Door Wldt, Cab	1
2	1048166	(000000–)	Seal, Afmkt, Bulb, Str, 0.58D 08Ft	1
3	1023920	(000000–)	Handle, Door	1
4	06935	(000000–)	Screw, Pan, Phl, M5 X 0.80 X 25, 4.8	2
5	06549	(000000–)	Nut, Hex, Lock, M5 X 0.80, Nl	2
6	41178	(000000–)	Washer, Flat, 0.25, Fendr	4
7	1052808	(000000–)	Angle, Mtg, Latch	1
8	74455	(000000–)	Screw, Hex, M6 X 1.00 X 12, Fmg	3
9	32485	(000000–)	Washer, Flat, 0.38, Sae	3
10	59661	(000000–)	Latch	1
11	41186	(000000–)	Washer, Flat, Belleville, .31	2
12	25046	(000000–)	Screw, Hex, .25–20 X 1.00, G5	2
13	1053068	(000000–)	Bracket, Latch, Door	1
14	06942	(000000–)	Screw, Hex, M6 X 1.00 X 16, 8.8	1
15	08708	(000000–)	Nut, Hex, Lock, M6 X 1.00, Nl	2
16	1049687	(000000–)	Angle Wldt, Mtg, Door	1
17	763045	(000000–)	Screw, Hex, M8 X 1.25 X 20, Fmg	2
18	1047728	(000000–)	Bracket Wldt, Mtg, Door	1
19	1037355	(000000–)	Screw, Hex, M8 X 1.25 X 35, 9.8, Sems	2
20	30013	(000000–)	Washer, Flat, 0.31, Fendr	2
21	08709	(000000–)	Nut, Hex, Lock, M8 X 1.25, Nl	2
22	1048161	(000000–)	Plate, Sppt, Hinge	1
23	314012	(000000–)	Tape, Hook, 1.0w [Velcro]	1

Fig. 9 – Deluxe Suspension Seat Kit

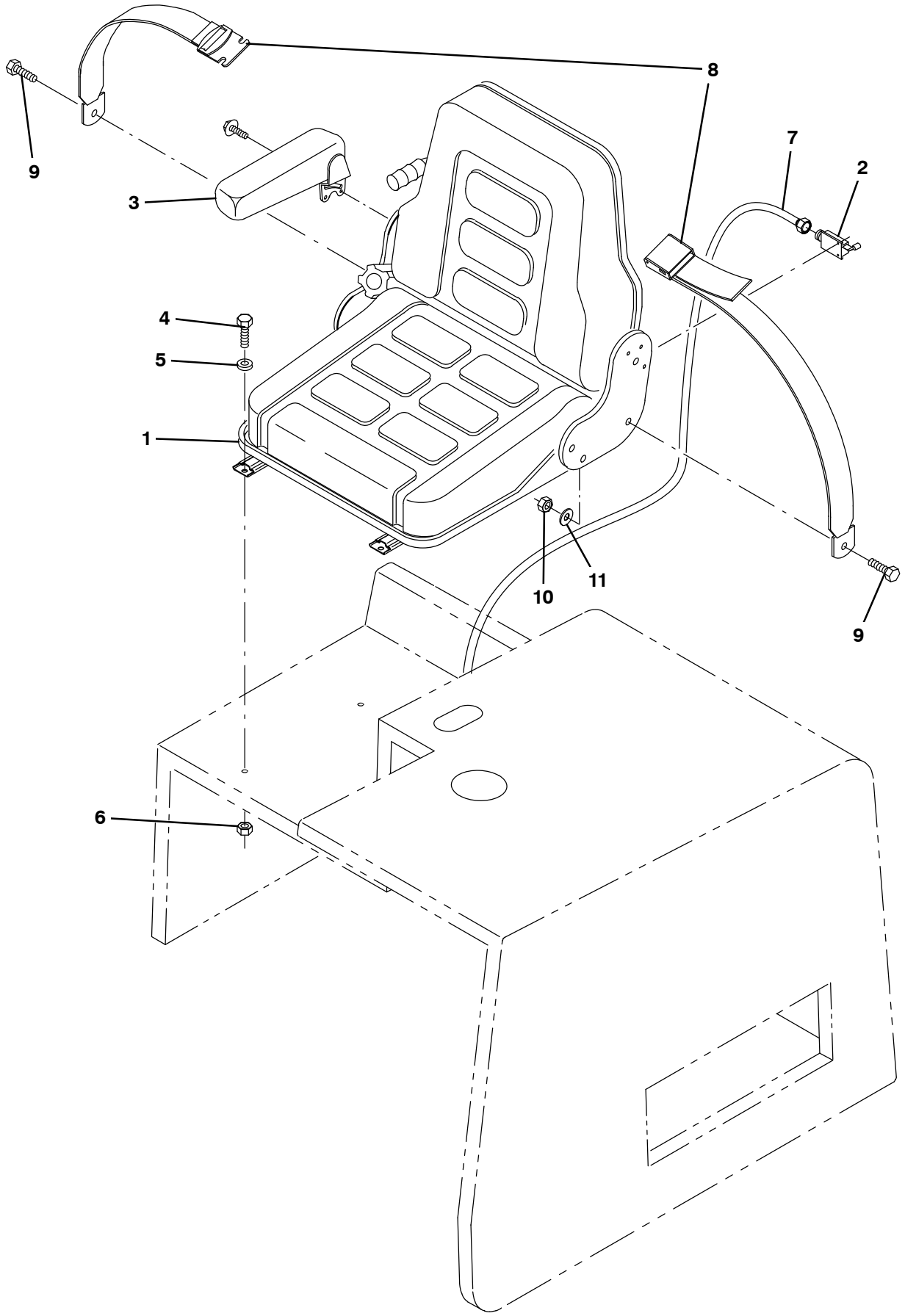

354970 – ALL

Fig. 9 – Deluxe Suspension Seat Kit

	Ref.	Part No.	Serial Number	Description	Qty.
▽		9006029	(000000–)	Seat Kit, Dlx, Ci [S20]	1
▲	1	1056543	(000000–)	Seat, Suspension [Grammer Gs12]	1
▲	2	69971	(000000–)	Switch, Seat	1
▲	3	71477	(000000–)	Armrest Assy, Rh, F/53845 [Grammer]	1
▲	4	41342	(000000–)	Screw, Hex, M8 X 1.25 X 40, 8.8	4
▲	5	32490	(000000–)	Washer, Flat, 0.25, Std	4
▲	6	08709	(000000–)	Nut, Hex, Lock, M8 X 1.25, Nl	4
▲	7	1056539	(000000–)	Harness, Seat [S20]	1
▲	8	30533	(000000–)	Seatbelt, 60.0l	1
▲	9	39283	(000000–)	Screw, Hex, M10 X 1.50 X 25, 8.8	2
▲	10	41430	(000000–)	Nut, Hex, Lock, M10 X 1.5, Nl	2
▲	11	32490	(000000–)	Washer, Flat, 0.25, Std	2

Fig. 10 – Seat Belt Kit

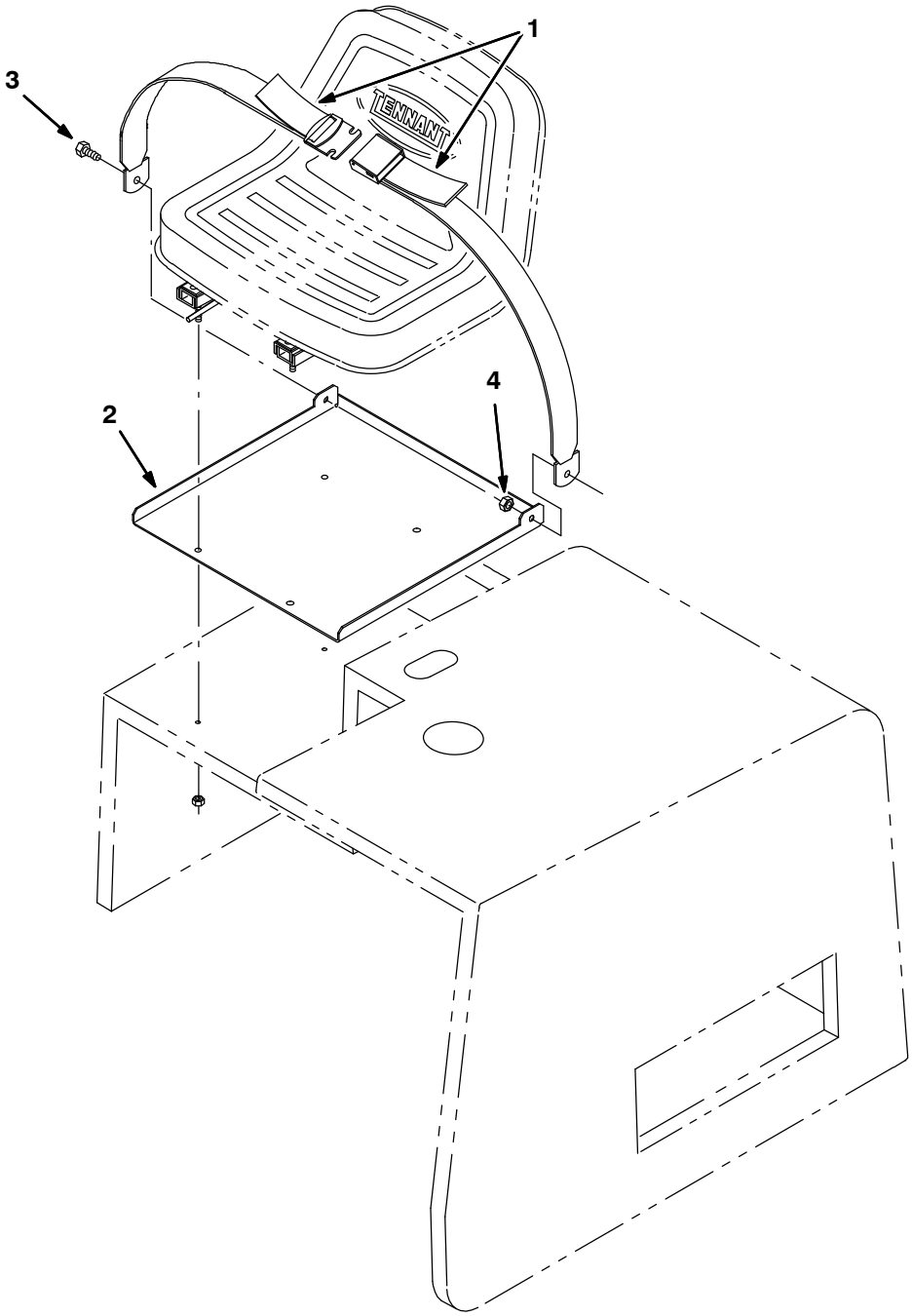

350033 –ALL

	Ref.	Part No.	Serial Number	Description	Qty.
▽		360932	(000000–)	Seatbelt Kit, Ci [6400]	1
▲	1	30533	(000000–)	Seatbelt, 60.0l	1
▲	2	360630	(000000–)	Plate, Mtg, Seatbelt	1
▲	3	06961	(000000–)	Screw, Hex, M10 X 1.50 X 20, 8.8	2
▲	4	41430	(000000–)	Nut, Hex, Lock, M10 X 1.5, NI	2

Fig. 11 – Corner Bumper Kit

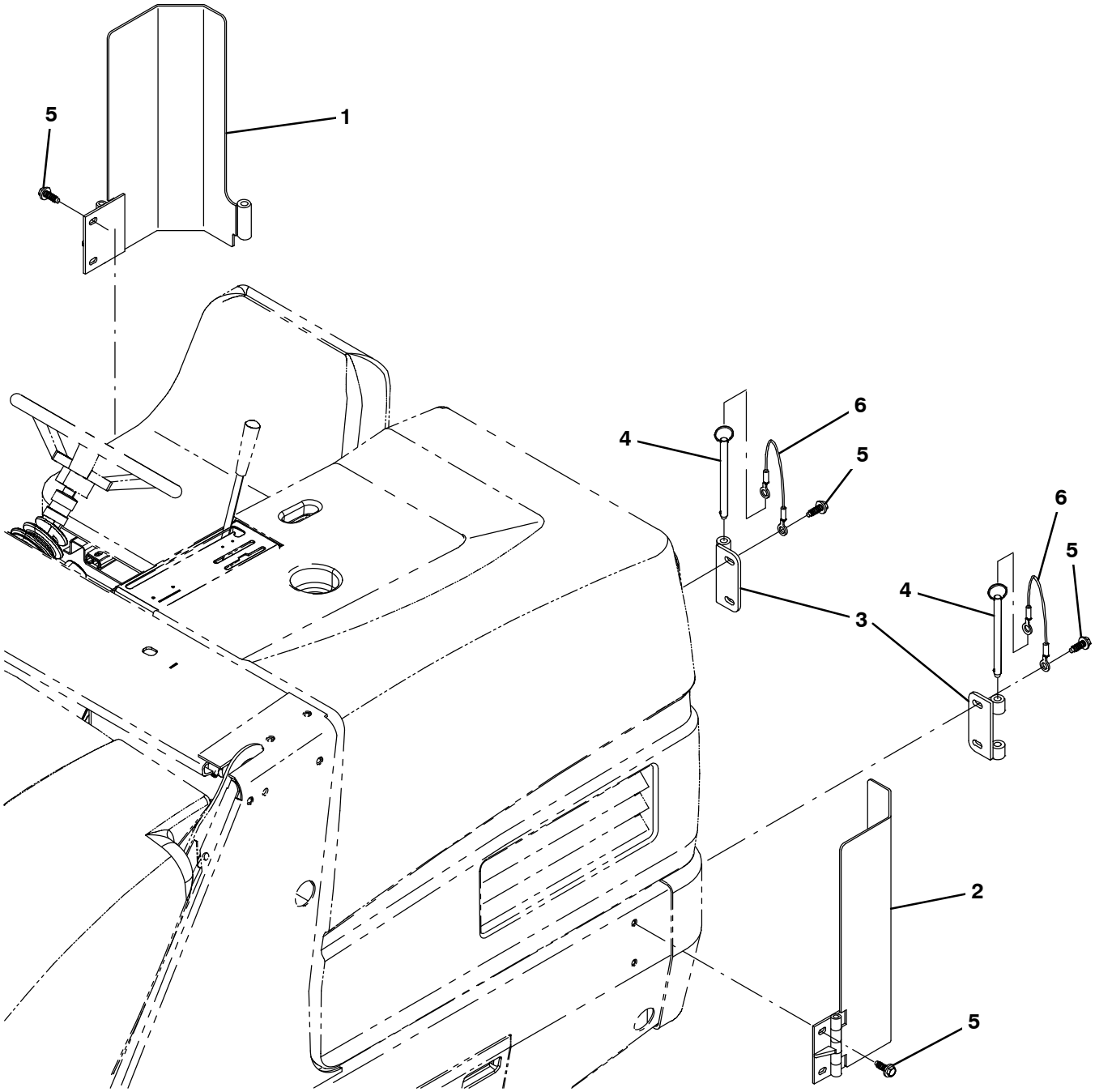

354973 – ALL

	Ref.	Part No.	Serial Number	Description	Qty.
▽		9006021	(000000–)	Bumper Kit, Corner, Rear, Ci [S20]	1
▲	1	1047115	(000000–)	Angle Wldt, Bmpr, Tower, Rh	1
▲	2	1047116	(000000–)	Angle Wldt, Bmpr, Tower, Lh	1
▲	3	1048408	(000000–)	Bracket Wldt, Mtg, Bmpr	2
▲	4	1043176	(000000–)	Pin, Hitch, .500d X 6.00l, Pl	2
▲	5	1037358	(000000–)	Screw, Hex, M10 X 1.50 X 35, 9.8, Sems	8
▲	6	87172	(000000–)	Cable, Glv .13d 010.0l .52eye /.52eye	2

Fig. 12 – Dual Side Brush Lift Group, LH

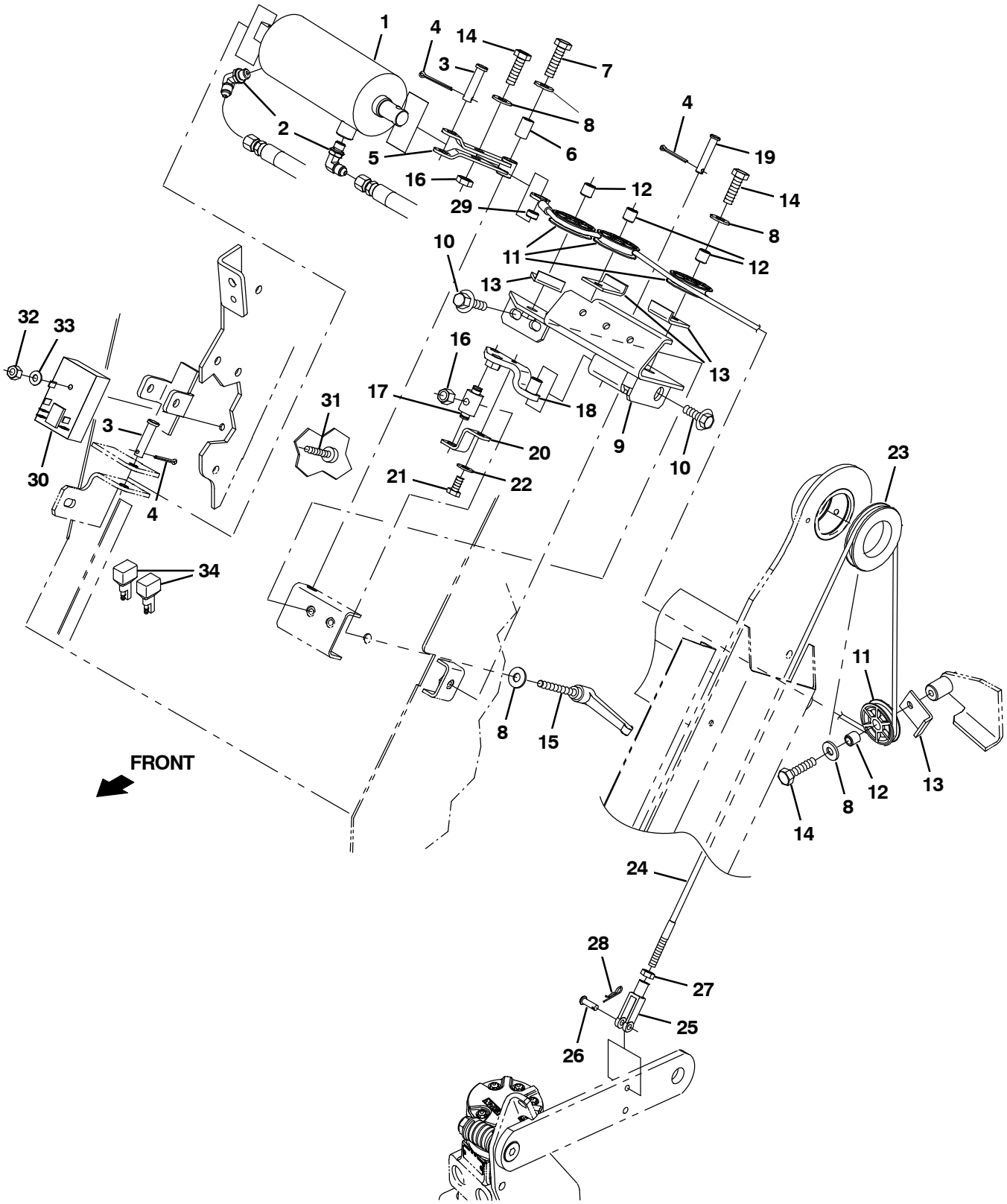

354991 – E, NA

Fig. 12 – Dual Side Brush Lift Group, LH

NOTE: Dual Side Brush Kit, Tennant Part Number 9006041, includes; Fig. 12, Fig. 13, Fig. 14, Fig. 15 and Fig. 16.

Ref.	Part No.	Serial Number	Description	Qty.
1	1048556	(000000–)	Cyl, Hyd, 2.5b 9.0l 01.50strk, 2500	1
2	77097	(000000–002999)	Fitting, Hyd, E90, Jm04/Om04	2
2	762427	(003000–)	Fitting, Hyd, E90, Fm04/Om04	2
3	29558	(000000–)	Pin, Clevis, 0.37d X 1.50l	2
4	08175	(000000–)	Pin, Cotter, .125 X 1.25	3
5	1045647	(000000–)	Pivot Wldt	1
6	51562	(000000–)	Tube, 0.33id 0.51od 00.8l, Stl, Pl	1
7	06955	(000000–)	Screw, Hex, M8 X 1.25 X 35, 8.8	1
8	32491	(000000–)	Washer, Flat, 0.31, Std	7
9	1045563	(000000–)	Plate Wldt	1
10	1037346	(000000–)	Screw, Hex, M8 X 1.25 X 25, 9.8, Sems	3
11	369781	(000000–)	Pulley, Cable, 1.5d Nyl	4
12	222460	(000000–)	Sleeve, P/M, 0.32b 0.50d 0.5l [430ss]	4
13	54400	(000000–)	Bracket, Angle, Keeper, Cable	4
14	76570	(000000–)	Screw, Hex, M8 X 1.25 X 30, 8.8	5
15	360414	(000000–)	Lever, Adj, Metal	1
16	08709	(000000–)	Nut, Hex, Lock, M8 X 1.25, Nl	2
17	71126	(000000–)	Block, Adj, Pivot	1
18	1045571	(000000–)	Pivot Wldt, Sba	1
19	397249	(000000–)	Pin, Clevis, 0.31d X 1.62l	1
20	1045475	(000000–)	Angle, Bottom	1
21	06941	(000000–)	Screw, Hex, M6 X 1.00 X 10, 8.8	1
22	32490	(000000–)	Washer, Flat, 0.25, Std	1
23	360077	(000000–)	Pulley, Cable, 3.0d 1.76b, .25d Cable	1
24	1046498	(000000–)	Cable, Ss .12d 89.0l .55eye / M6–1.0	1
25	1035826	(000000–)	Clevis, Adj, M6 Pin, M6 X 1.0 Rh, Pl	1
26	14605	(000000–)	Pin, Clevis, 0.25d X 0.75l	1
27	07785	(000000–)	Nut, Hex, Std, M6 X 1.00, Ss	1
28	08085	(000000–)	Pin, Cotter, Hair, 0.31D .058 Wir	1
29	360801	(000000–)	Sleeve, 0.32b 0.50d 0.3l, 2cham, Ss	1
30	1046038	(000000–)	Timer, 36vdc, 10a [Left Hand Side Brush]	1
31	32747	(000000–)	Screw, Pan, Phl, M6 X 1.00 X 40, Ss	1
32	08708	(000000–)	Nut, Hex, Lock, M6 X 1.00, Nl	1
33	32483	(000000–)	Washer, Flat, 0.25, Sae	1
34	222290	(000000–)	Diode, Ele, Plug	2

Fig. 13 – Dual Side Brush Motor and Pivot Group, LH

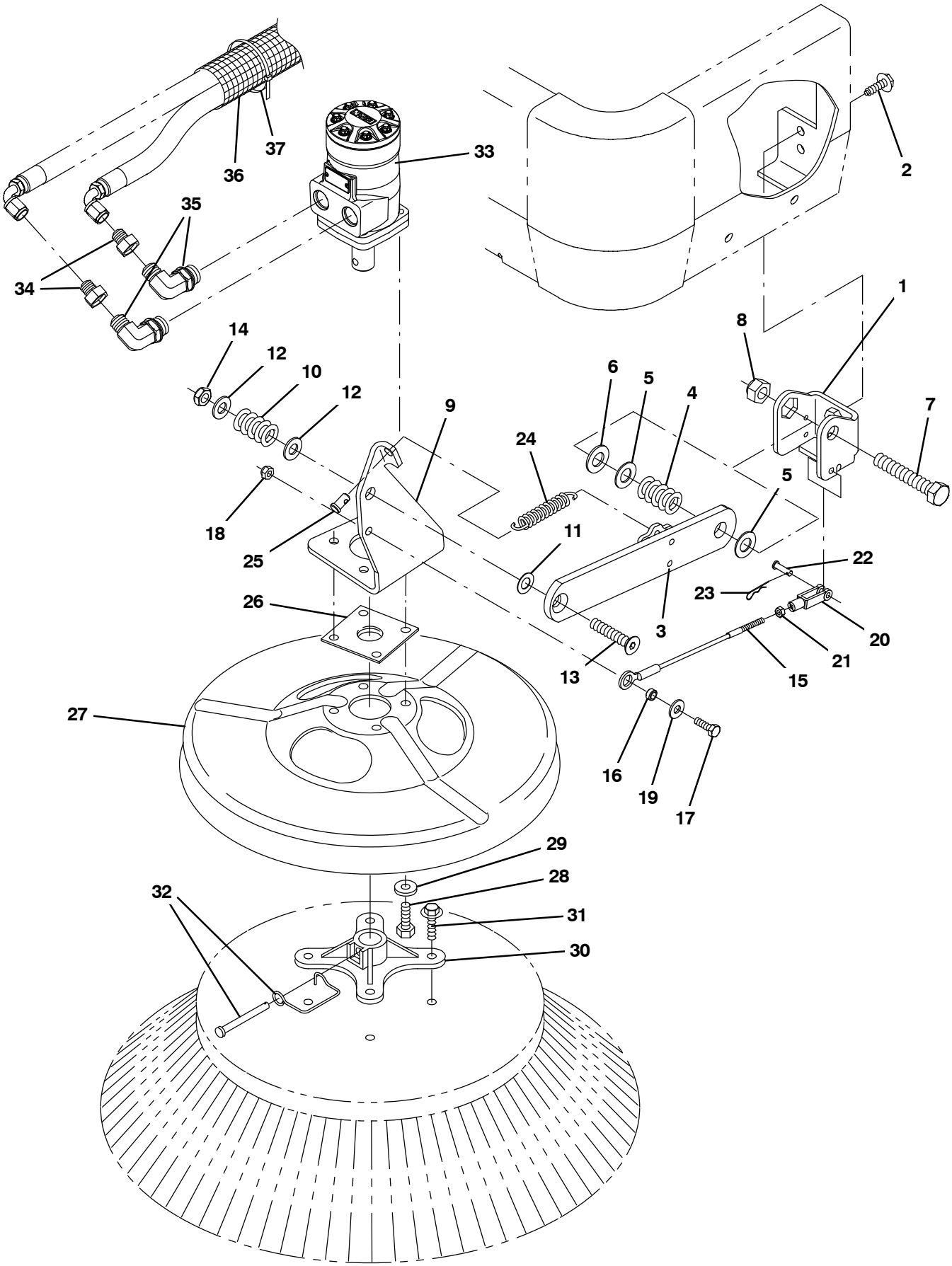

354992 – E, NA

Fig. 13 – Dual Side Brush Motor and Pivot Group, LH

NOTE: Dual Side Brush Kit, Tennant Part Number 9006041, includes; Fig. 12, Fig. 13, Fig. 14, Fig. 15 and Fig. 16.

	Ref.	Part No.	Serial Number	Description	Qty.
	1	1042727	(000000–)	Bracket, Sidebrush, Lh	1
	2	1037358	(000000–)	Screw, Hex, M10 X 1.50 X 35, 9.8, Sems	2
	3	1042730	(000000–)	Arm Wldt, Lift, Lh	1
	4	360081	(000000–)	Spring, Dsl, 1.25od 0.62id 1.80l	1
	5	64425	(000000–)	Washer, Thrust, 0.61b 1.25d .06, Fgl	2
	6	15331	(000000–)	Washer, Flat, 0.62, Sae	1
	7	06988	(000000–)	Screw, Hex, M16 X 2.00 X 90, 8.8	1
	8	33342	(000000–)	Nut, Hex, Lock, M16 X 2.00, Nl	1
	9	1046248	(000000–)	Bracket, Mtg, Motor, Lh	1
	10	360357	(000000–)	Spring, Dsl, 1.00od 0.50id 1.25l	1
	11	59633	(000000–)	Washer, Thrust, 0.53b 1.00d 0.03w[Fbrgl]	1
	12	32486	(000000–)	Washer Flat,0.50,Sae	2
	13	27108	(000000–)	Screw, Flt, Soc, .50–13 X 2.50, Al	1
	14	86029	(000000–)	Nut, Hex, Flexlock, .50–13, Thin	1
	15	1048311	(000000–)	Cable, Ss .19d 008.5l .55eye / M6–1.0	1
	16	360801	(000000–)	Sleeve, 0.32b 0.50d 0.3l, 2cham, Ss	1
	17	09010	(000000–)	Screw, Hex, M8 X 1.25 X 25, Ss	1
	18	08713	(000000–)	Nut, Hex, Lock, M8 X 1.25, Nl, Ss	1
	19	01685	(000000–)	Washer, Flat, 0.38b 0.88d .08, Ss	1
	20	1035826	(000000–)	Clevis, Adj, M6 Pin, M6 X 1.0 Rh, Pl	1
	21	07785	(000000–)	Nut, Hex, Std, M6 X 1.00, Ss	1
	22	14605	(000000–)	Pin, Clevis, 0.25d X 0.75l	1
	23	08085	(000000–)	Pin, Cotter, Hair, 0.31d .058 Wir	1
	24	29499	(000000–)	Spring, Extn, 0.75od 0.11wir 04.5l	1
	25	41305	(000000–)	Pin, Clevis, 0.37d X 0.75l	1
	26	16082	(000000–)	Guard, String, Motor, Brush	1
	27	1054256	(000000–)	Guard, Brush	1
	28	46559	(000000–)	Screw, Hex, .38–16 X 1.25, Nl	4
	29	32492	(000000–)	Washer, Flat, 0.38, Std	4
	30	47501	(000000–)	Hub, Adapter, Brush, 1.00b	1
	31	39396	(000000–)	Screw, Hex, .31–12 X 1.50, Fmg [Ab]	4
	32	84581	(000000–)	Pin Assy, Side Brush W/ Clip	1
	33	361026	(000000–002395)	Motor, Hyd, Gear, Int 08.9 Bi–Dir 1500 (See Breakdown)	1
▽	33	1068803	(002396–)	Motor, Hyd, Gear, Int 08.9 Bi–Dir 1500	1
▲		22615	(002396–)	Seal Kit, Motor [Cl]	1
	34	47753	(000000–002999)	Fitting, Hyd, Str, Jf08/Jm06	2
	34	762458	(003000–)	Fitting, Hyd, Str, Ff08/Fm06	2
	35	56821	(000000–002999)	Fitting, Hyd, E90, Jm08/Om10	2
	35	767411	(003000–)	Fitting, Hyd, E90, Fm08/Om10	2
	36	31646	(000000–)	Sleeve, Nyl, 1.63id 25.0l	1
	37	49266	(000000–)	Tie, Cable, Nyl, 07.3l .19w 1.8 Max D	1

Fig. 14 – Dual Side Brush Wire Harness Group

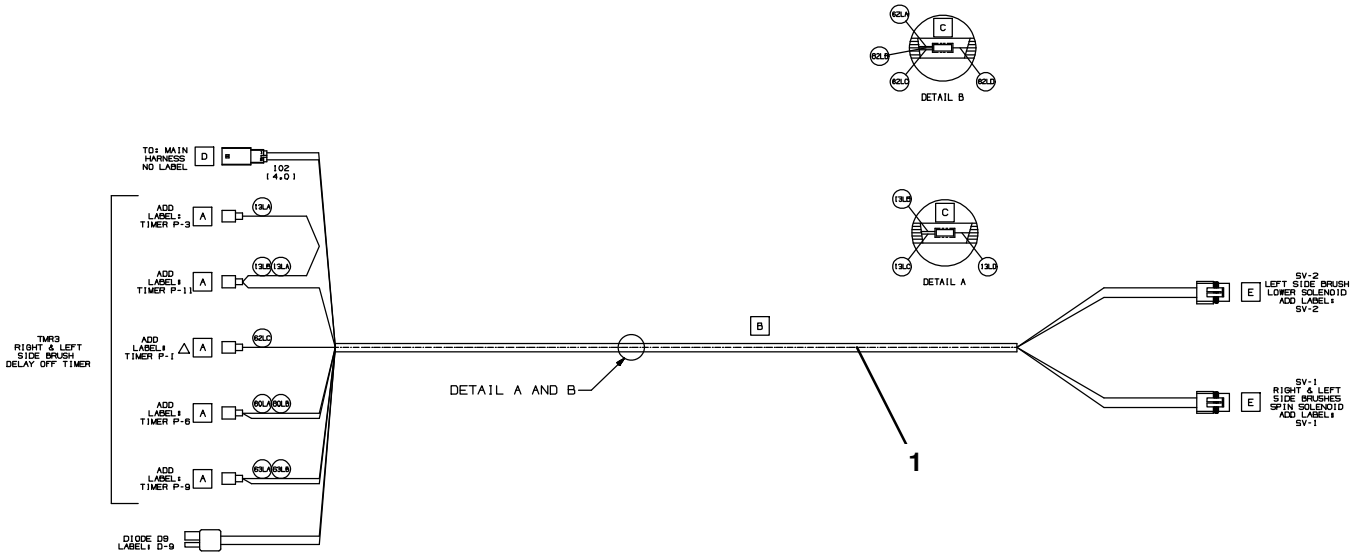

354993 – E

NOTE: Dual Side Brush Kit, Tennant Part Number 9006041, includes; Fig. 12, Fig. 13, Fig. 14, Fig. 15 and Fig. 16.

Ref.	Part No.	Serial Number	Description	Qty.
1	1050070	(000000–)	Harness, Brush, Side, Lh, 36Vdc [S20]	1

Fig. 15 – Dual Side Brush Hydraulic Valve Group

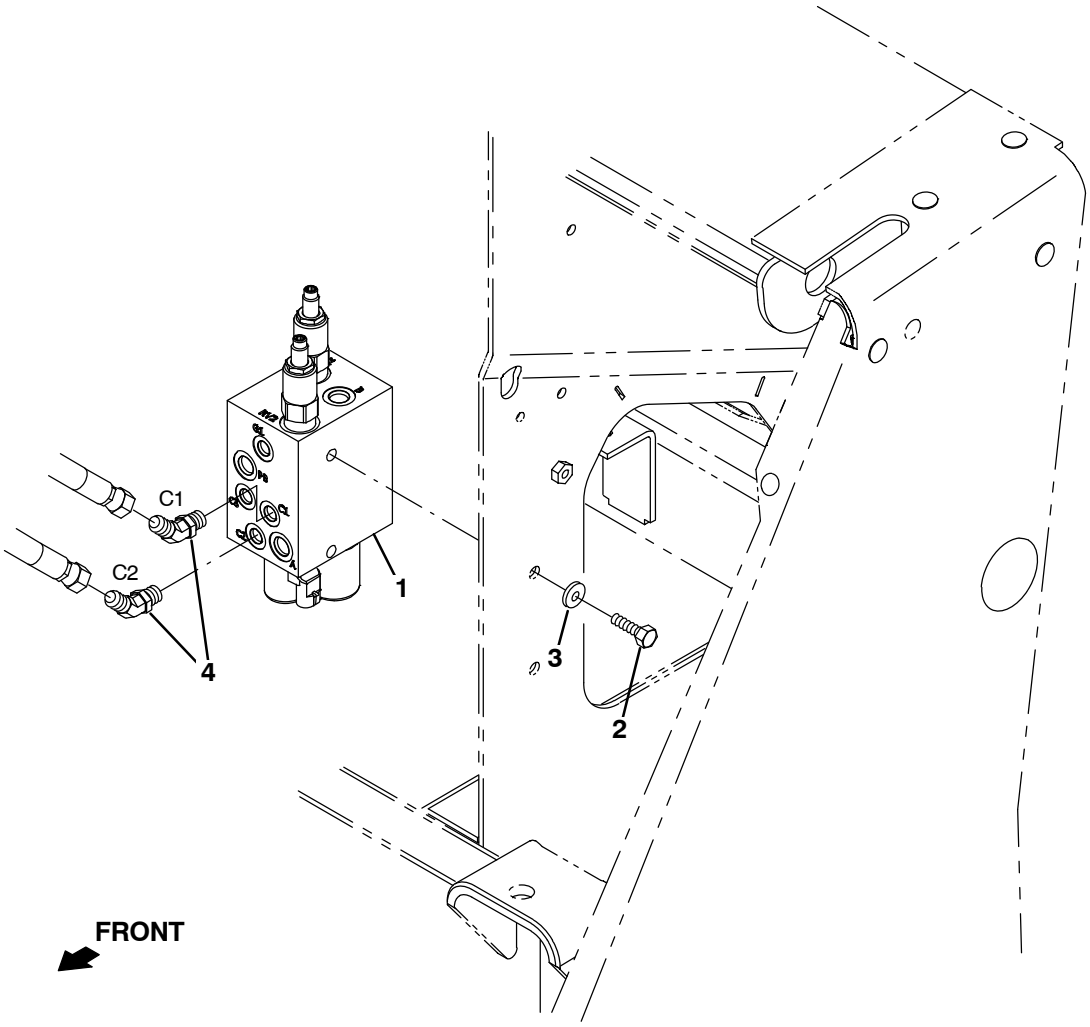

356018 – E

NOTE: Dual Side Brush Kit, Tennant Part Number 9006041, includes; Fig. 12, Fig. 13, Fig. 14, Fig. 15 and Fig. 16.

Ref.	Part No.	Serial Number	Description	Qty.
1	1045994	(000000–006474)	Valve, Hyd, Solenoid, 36Vdc (See Breakdowns)	1
1	1237086	(006475–)	Valve, Hyd, Solenoid, 36Vdc (See Breakdowns)	1
2	06961	(000000–)	Screw, Hex, M10 X 1.50 X 20, 8.8	2
3	32492	(000000–)	Washer, Flat, 0.38, Std	2
4	34359	(000000–002999)	Fitting, Hyd, E45, Jm04/Om04	2
4	79874	(003000–)	Fitting, Hyd, E45, Fm04/Om04	2

Fig. 16 – Dual Side Brush Hydraulic Hose Diagram

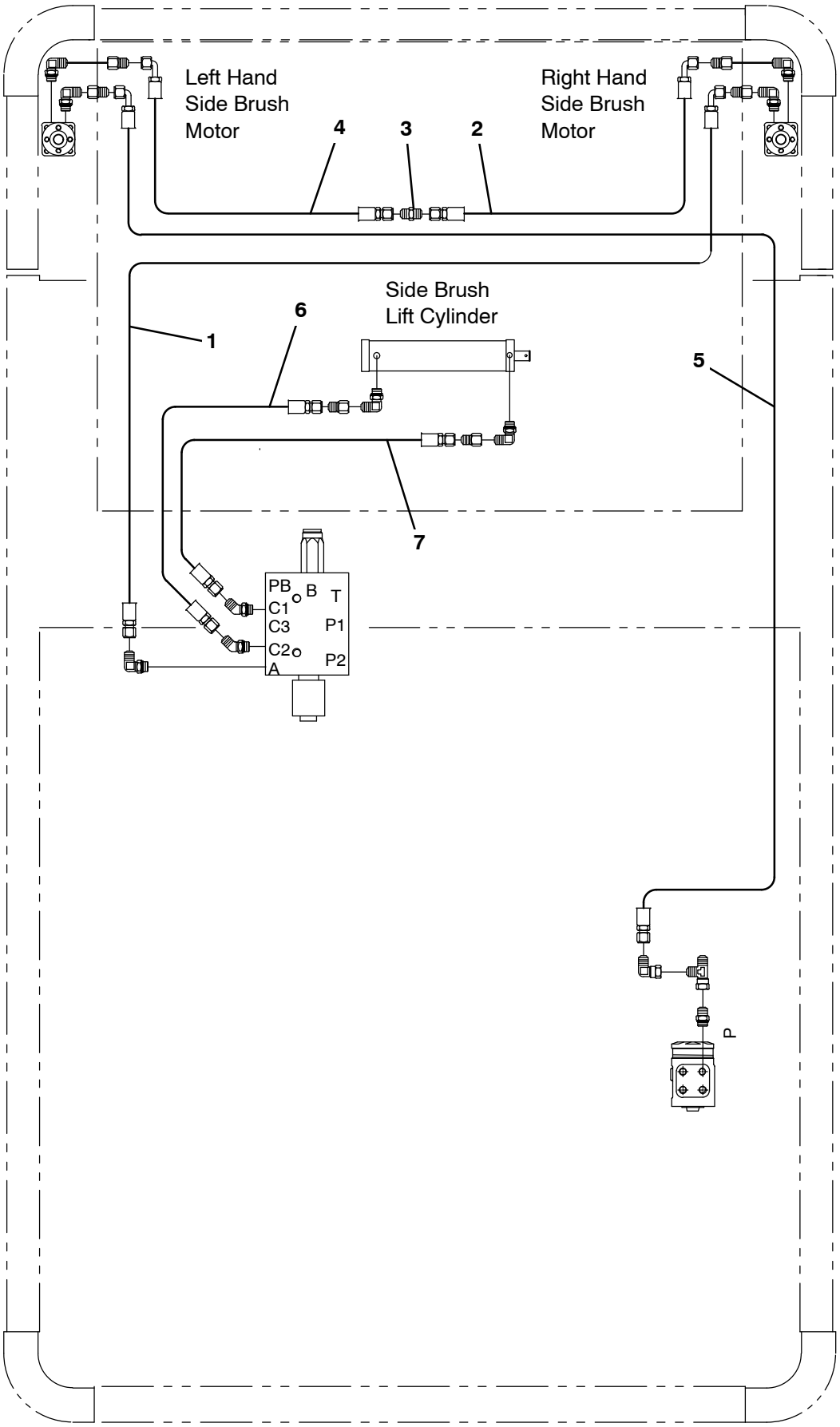

356019 – E, NA

Fig. 16 – Dual Side Brush Hydraulic Hose Diagram

NOTE: Dual Side Brush Kit, Tennant Part Number 9006041, includes; Fig. 12, Fig. 13, Fig. 14, Fig. 15 and Fig. 16.

Ref.	Part No.	Serial Number	Description	Qty.
1	02469	(000000–002999)	Hose, Hyd, Med06, Jf06e90/Jf06str, 100.0	1
1	1071774	(003000–)	Hose, Hyd, Med06, Of06e90/Of06str, 100.0	1
2	31597	(000000–002999)	Hose, Hyd, Med06, Jf06e90/Jf06str, 068.0	1
2	1071776	(003000–)	Hose, Hyd, Med06, Of06e90/Of06str, 068.0	1
3	15803	(000000–002999)	Fitting, Hyd, Str, Jm06/Jm06	1
3	762443	(003000–)	Fitting, Hyd, Str, Fm06/Fm06 Bh	1
4	1041941	(000000–002999)	Hose, Hyd, Tc06, Jf06e90/Jf06str, 086.0	1
4	1071940	(003000–)	Hose, Hyd, Tc06, Of06e90/Of06str, 086.0	1
5	1052533	(000000–002999)	Hose, Hyd, Tc06, Jf06e90/Jf06str, 096.0	1
5	1071943	(003000–)	Hose, Hyd, Tc06, Of06e90/Of06str, 086.0	1
6	1052534	(000000–002999)	Hose, Hyd, Tc04, Jf04str/Jf04str, 028.0	1
6	1071941	(003000–)	Hose, Hyd, Tc04, Of04str/Of04str, 028.0	1
7	1025992	(000000–002999)	Hose, Hyd, Tc04, Jf04str/Jf04str, 020.0	1
7	1071942	(003000–)	Hose, Hyd, Tc04, Of04str/Of04str, 020.0	1

Fig. 17 – Right Hand Side Brush Dust Control Kit (000000–006329)

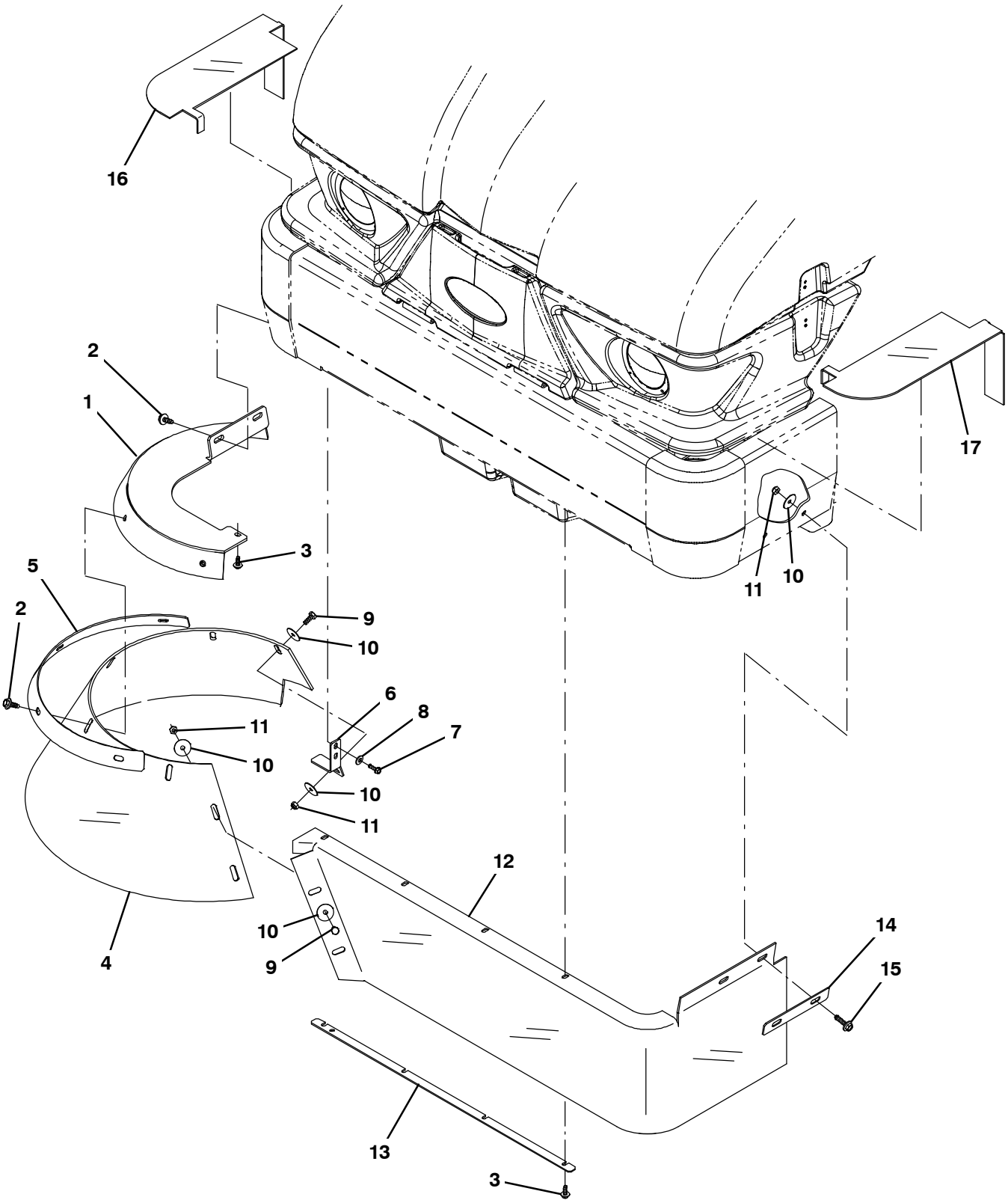

354969 – ALL

Fig. 17 – Right Hand Side Brush Dust Control Kit (000000–006329)

	Ref.	Part No.	Serial Number	Description	Qty.
▽		9006013	(000000–006329)	Sbdc Kit, W/O Lh Side Brush, Ci [S20]	1
▲	1	1054371	(000000–006329)	Support Wldt, Rh, Sbdc	1
▲	2	1037346	(000000–006329)	Screw, Hex, M8 X 1.25 X 25, 9.8, Sems	6
▲	3	1040467	(000000–006329)	Screw, Hex, M6 X 1.00 X 20, 9.8, Sems	5
▲	4	1054391	(000000–006329)	Skirt, Brush, Side, Sbdc	1
▲	5	1054567	(000000–006329)	Retainer, Skirt	1
▲	6	1047696	(000000–006329)	Bracket, Sbdc, Rh	1
▲	7	12459	(000000–006329)	Screw, Hex, M6 X 1.00 X 20, Fmg	2
▲	8	32490	(000000–006329)	Washer, Flat, 0.25, Std	2
▲	9	09740	(000000–006329)	Screw, Hex, M8 X 1.25 X 20, Ss	3
▲	10	30013	(000000–006329)	Washer, Flat, 0.31, Fendr	8
▲	11	08709	(000000–006329)	Nut, Hex, Lock, M8 X 1.25, Nl	5
▲	12	1054625	(000000–006329)	Skirt, Brush, Side, Sbdc [W/O Lhsb]	1
▲	13	1048720	(000000–006329)	Retainer, Skirt	1
▲	14	1048883	(000000–006329)	Retainer, Skirt	1
▲	15	1037355	(000000–006329)	Screw, Hex, M8 X 1.25 X 35, 9.8, Sems	2
▲	16	1047773	(000000–006329)	Seal, Top, Sbdc	1
▲	17	1054369	(000000–006329)	Seal, Top, Lh, Sbdc	1

Fig. 18 – Right Hand Side Brush Dust Control Kit (006330–)

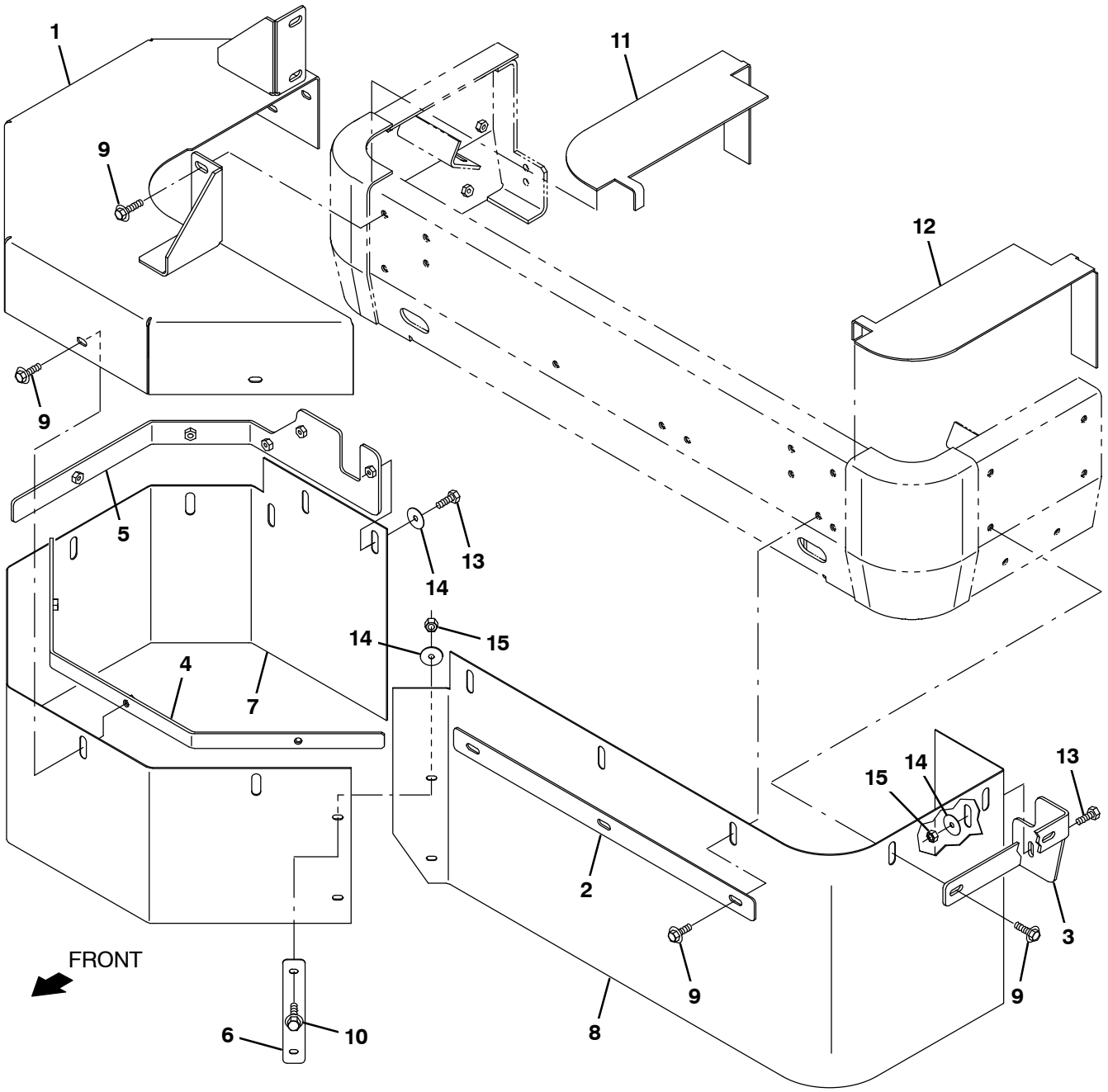

356805 – ALL

Fig. 18 – Right Hand Side Brush Dust Control Kit (006330–)

	Ref.	Part No.	Serial Number	Description	Qty.
▽		9017557	(006330–)	Sbdc Kit, W/O Lh Side Brush, Ci [S20]	1
▲	1	1076207	(006330–)	Cover Wldt, Rh, Sbdc [S20]	1
▲	2	1076216	(006330–)	Strip, Retainer, Front, Sbdc	1
▲	3	1076218	(006330–)	Retainer, Skirt, Lh Side	1
▲	4	1076213	(006330–)	Strip, Retainer, Skirt, Sbdc	1
▲	5	1076211	(006330–)	Bracket, Retainer, Skirt, Rh, Sbdc	1
▲	6	1076292	(006330–)	Plate, Support, Skirt Sbdc	1
▲	7	1076210	(006330–)	Skirt, Front, Rh, Sbdc, Rpd [S20]	1
▲	8	1076215	(006330–)	Skirt, Front, Single Sbdc, Rpd [S20]	1
▲	9	1037354	(006330–)	Screw, Hex, M8 X 1.25 X 30, 9.8, Sems	16
▲	10	1037346	(006330–)	Screw, Hex, M8 X 1.25 X 25, 9.8, Sems	2
▲	11	1047773	(006330–)	Seal, Top, Sbdc	1
▲	12	1054369	(006330–)	Seal, Top, Lh, Sbdc	1
▲	13	39277	(006330–)	Screw, Hex, M8 X 1.25 X 25, 8.8	2
▲	14	30013	(006330–)	Washer, Flat, 0.31, Fendr	4
▲	15	08709	(006330–)	Nut, Hex, M8 X 1.25	3

Fig. 19 – Dual Side Brush Dust Control Kit (000000–006329)

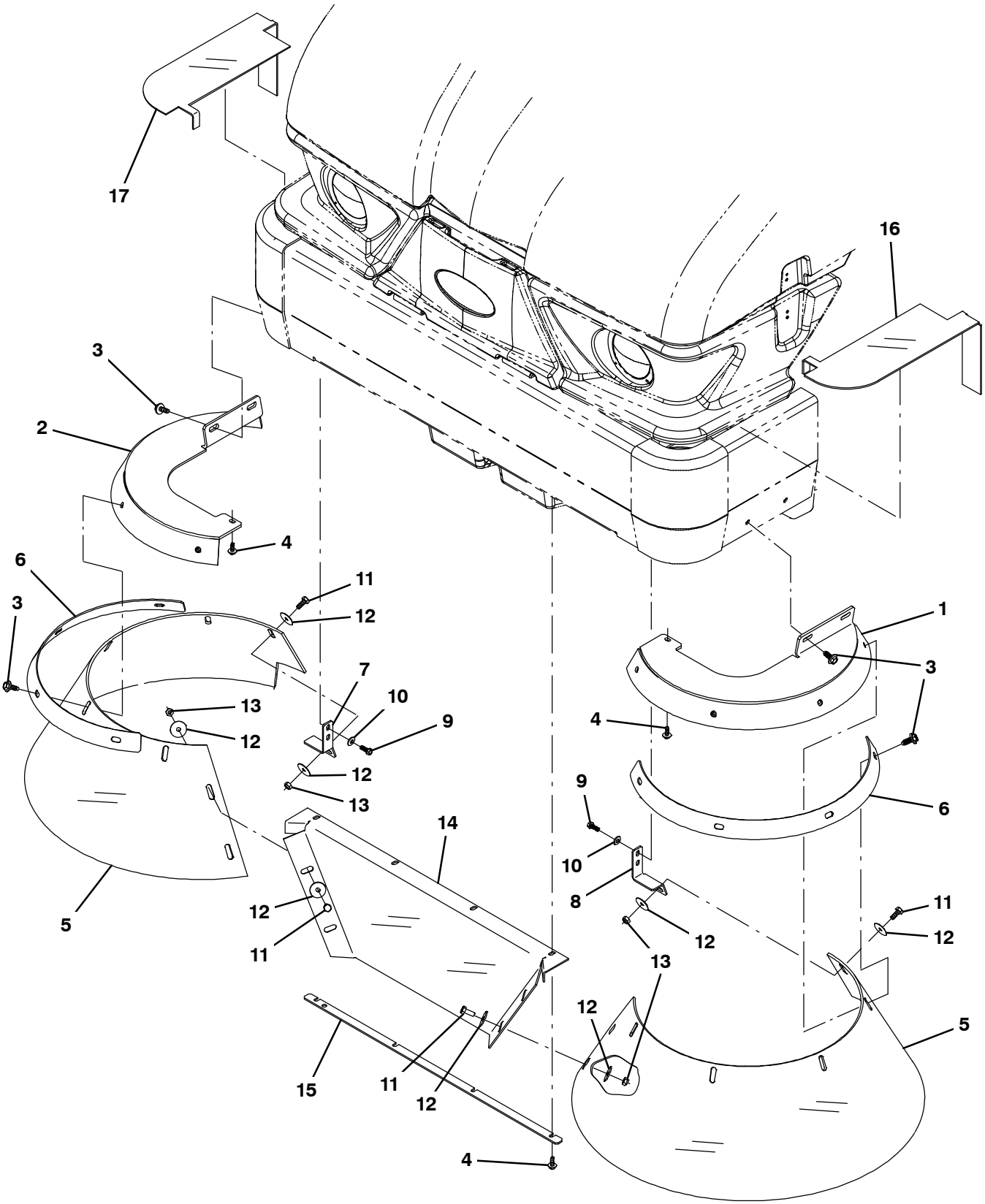

354971 – E

Fig. 19 – Dual Side Brush Dust Control Kit (000000–006329)

	Ref.	Part No.	Serial Number	Description	Qty.
▽		9006014	(000000–006329)	Sbdc Kit, W/ Lh Side Brush, Ci [S20]	1
▲	1	1054374	(000000–006329)	Support Wldt, Lh, Sbdc	1
▲	2	1054371	(000000–006329)	Support Wldt, Rh, Sbdc	1
▲	3	1037346	(000000–006329)	Screw, Hex, M8 X 1.25 X 25, 9.8, Sems	12
▲	4	1040467	(000000–006329)	Screw, Hex, M6 X 1.00 X 20, 9.8, Sems	6
▲	5	1054391	(000000–006329)	Skirt, Brush, Side, Sbdc	2
▲	6	1054567	(000000–006329)	Retainer, Skirt	2
▲	7	1047696	(000000–006329)	Bracket, Sbdc, Rh	1
▲	8	1048785	(000000–006329)	Bracket, Sbdc, Lh	1
▲	9	12459	(000000–006329)	Screw, Hex, M6 X 1.00 X 20, Fmg	4
▲	10	32490	(000000–006329)	Washer, Flat, 0.25, Std	4
▲	11	09740	(000000–006329)	Screw, Hex, M8 X 1.25 X 20, Ss	6
▲	12	30013	(000000–006329)	Washer, Flat, 0.31, Fendr	12
▲	13	08709	(000000–006329)	Nut, Hex, Lock, M8 X 1.25, Nl	6
▲	14	1048718	(000000–006329)	Skirt, Sbdc, Sba, Lh	1
▲	15	1048720	(000000–006329)	Retainer, Skirt	1
▲	16	1054369	(000000–006329)	Seal, Top, Lh, Sbdc	1
▲	17	1047773	(000000–006329)	Seal, Top, Sbdc	1

Fig. 20 – Dual Side Brush Dust Control Kit (006330–)

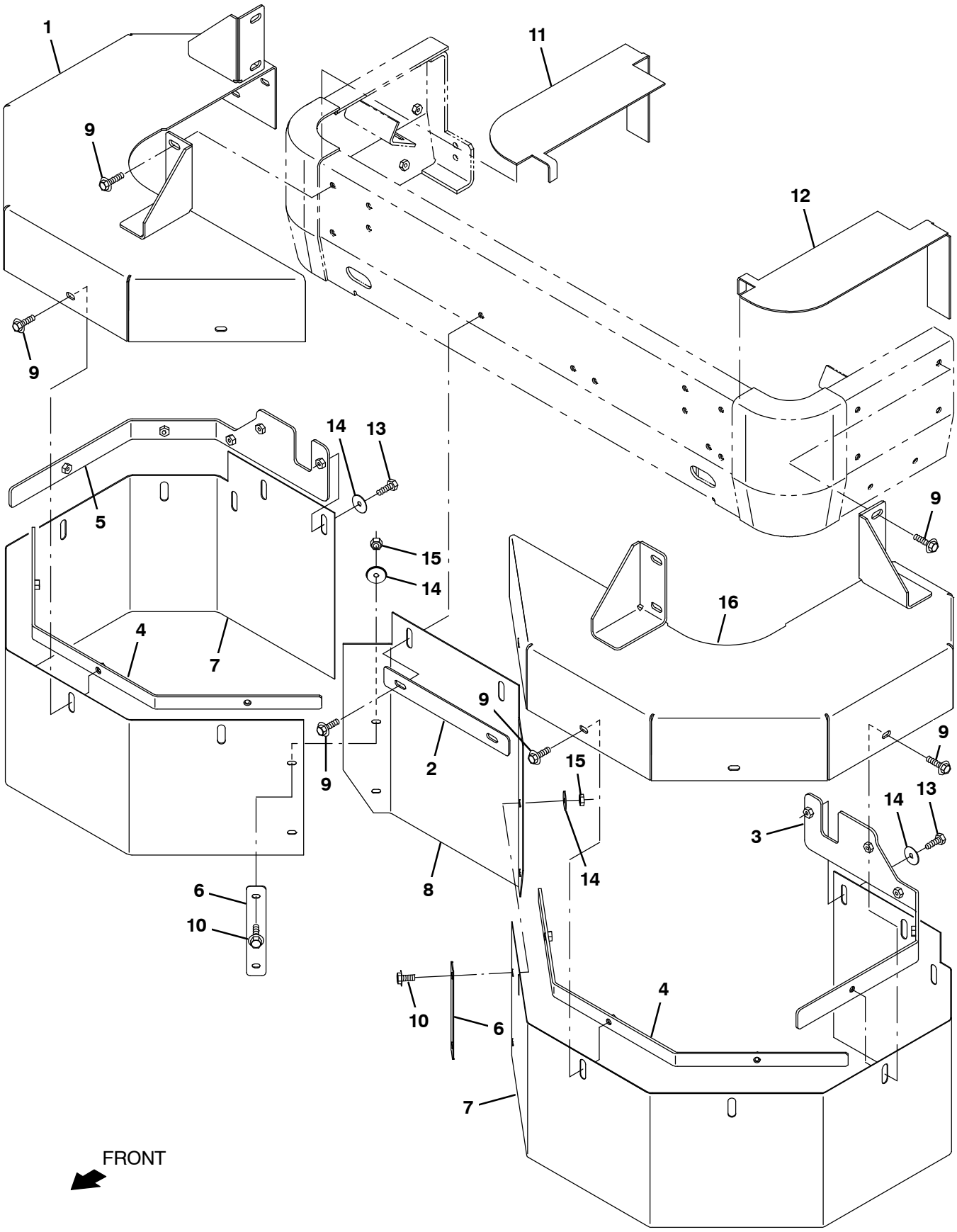

356806 – IC

Fig. 20 – Dual Side Brush Dust Control Kit (006330–)

	Ref.	Part No.	Serial Number	Description	Qty.
▽		9017556	(006330–)	Sbdc Kit, W/ Lh Side Brush, Ci [S20]	1
▲	1	1076207	(006330–)	Cover Wldt, Rh, Sbdc [S20]	1
▲	2	1076216	(006330–)	Strip, Retainer, Front, Sbdc	1
▲	3	1076218	(006330–)	Retainer, Skirt, Lh Side	1
▲	4	1076213	(006330–)	Strip, Retainer, Skirt, Sbdc	1
▲	5	1076211	(006330–)	Bracket, Retainer, Skirt, Rh, Sbdc	1
▲	6	1076292	(006330–)	Plate, Support, Skirt Sbdc	2
▲	7	1076210	(006330–)	Skirt, Front, Rh, Sbdc, Rpd [S20]	2
▲	8	1076264	(006330–)	Skirt, Front, Dual Sbdc, Rpd [S20]	1
▲	9	1037354	(006330–)	Screw, Hex, M8 X 1.25 X 30, 9.8, Sems	22
▲	10	1037346	(006330–)	Screw, Hex, M8 X 1.25 X 25, 9.8, Sems	4
▲	11	1047773	(006330–)	Seal, Top, Sbdc	1
▲	12	1054369	(006330–)	Seal, Top, Lh, Sbdc	1
▲	13	39277	(006330–)	Screw, Hex, M8 X 1.25 X 25, 8.8	2
▲	14	30013	(006330–)	Washer, Flat, 0.31, Fendr	6
▲	15	08709	(006330–)	Nut, Hex, M8 X 1.25	3
▲	16	1076258	(006330–)	Cover Wldt, Lh, Sbdc [S20]	1

Fig. 21 – Vacuum Wand Kit

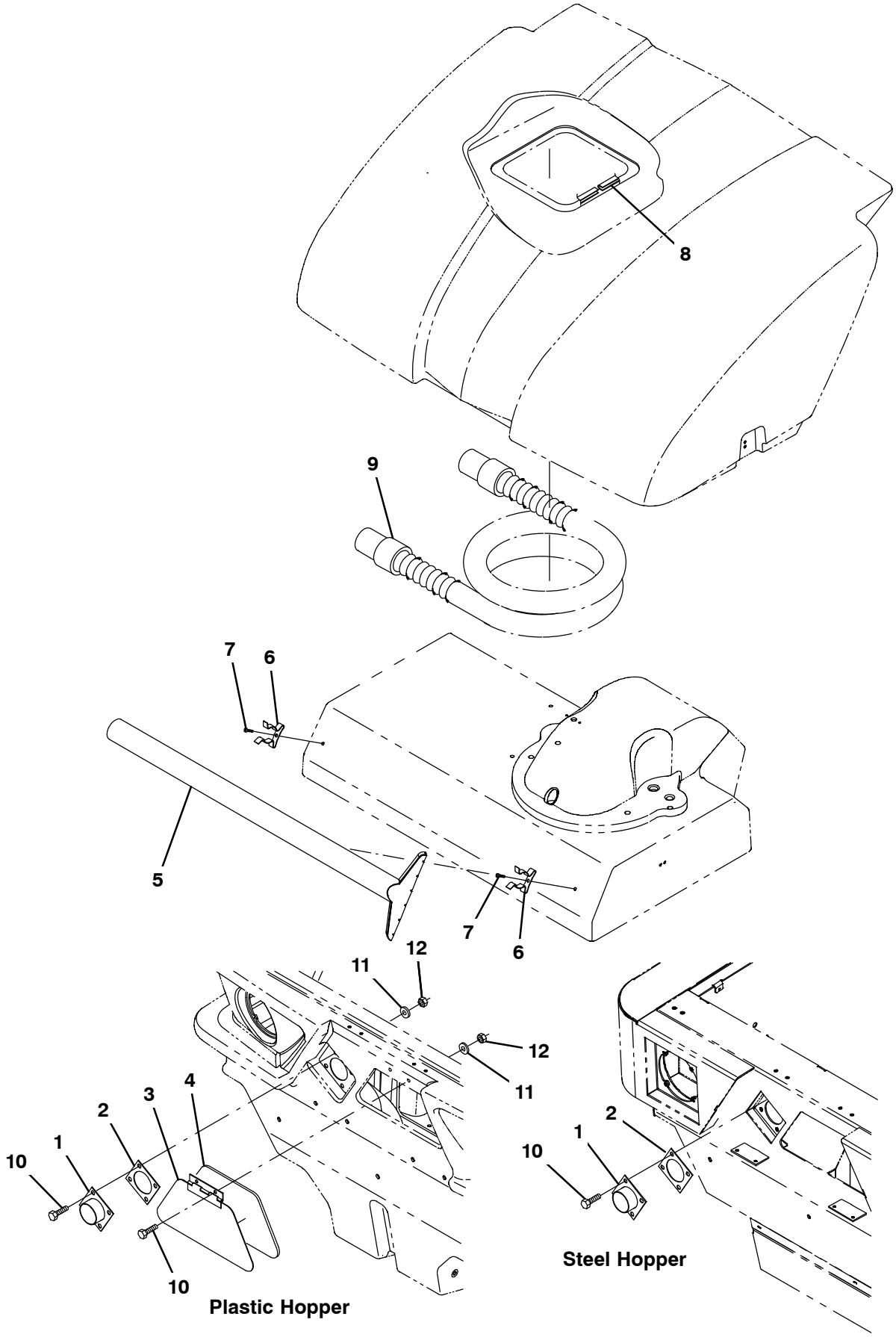

354972 – NA

Fig. 21 – Vacuum Wand Kit

	Ref.	Part No.	Serial Number	Description	Qty.
▽		9006023	(000000–)	Wand Kit, Vacuum, Ci [S20]	1
▲	1	1052620	(000000–)	Adapter Wldt, Wand, Vacuum	1
▲	2	55965	(000000–)	Seal, Rbr, 0.06, Tube, Vacuum Wand	1
▲	3	1047632	(000000–)	Door Wldt, Wand, Vacuum	1
▲	4	1047635	(000000–)	Gasket, Door, Wand, Vacuum	1
▲	5	9006909	(000000–)	Wand, Vacuum, W/ Label, Na [S20]	1
▲	5	9006911	(000000–)	Wand, Vacuum, W/ Label, JP [S20]	1
▲	6	67004	(000000–)	Clip, Grip, Finger, 1.00–1.88d,White Vyl	2
▲	7	360973	(000000–)	Screw, Pan, 12–16 X 0.50, F/ Plstc	2
▲	8	07887	(000000–)	Molding, Trim, Pvc, .08–.11 39.2l	1
▲	9	54009	(000000–)	Hose Assy, W/2cuff, 2.0d 120l 2.0/2.0	1
▲	10	08716	(000000–)	Screw, Hex, M6 X 1.00 X 20, Ss	6
▲	11	32490	(000000–)	Washer, Flat, 0.25, Std	6
▲	12	08708	(000000–)	Nut, Hex, Lock, M6 X 1.00, Nl	6

Fig. 22 – Fire Extinguisher Kit

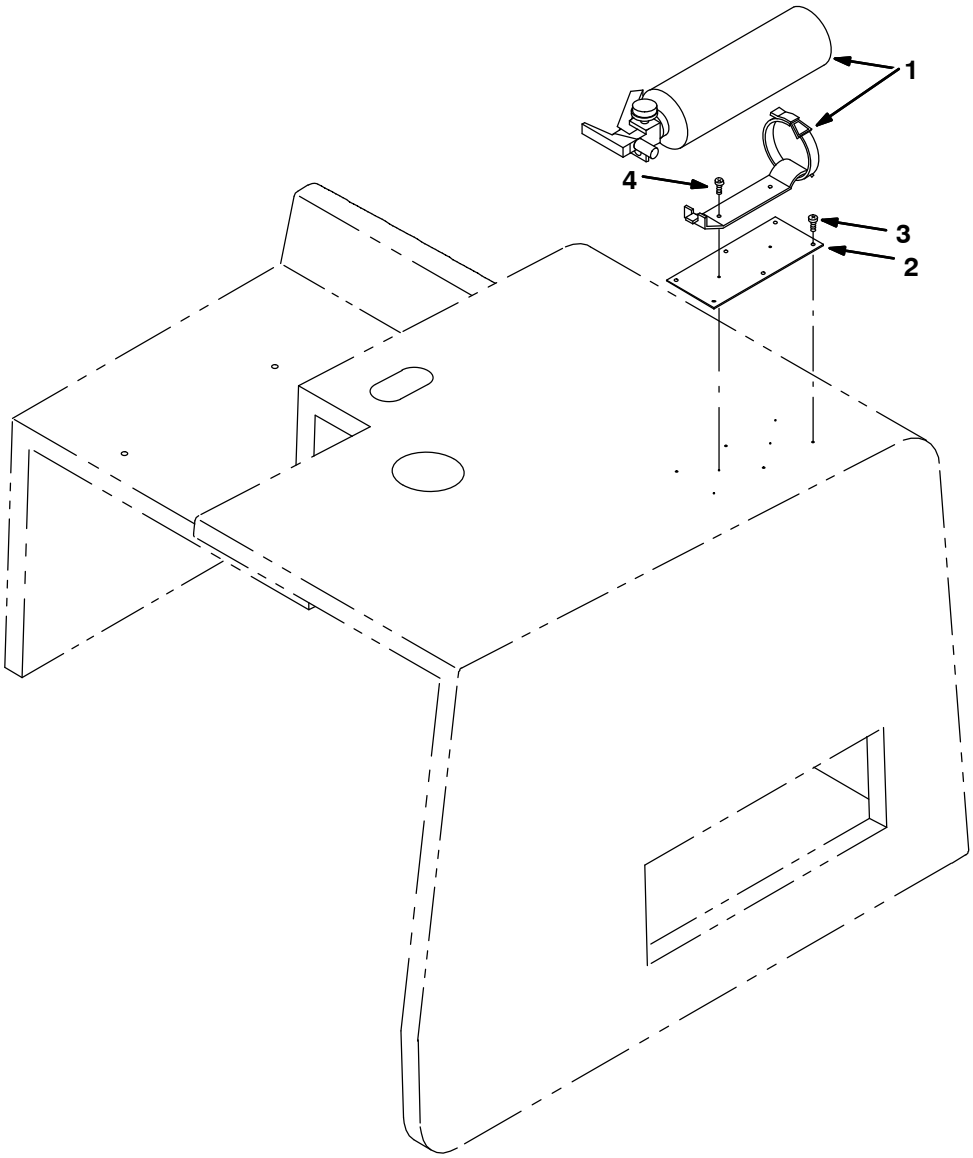

350035 – ALL

	Ref.	Part No.	Serial Number	Description	Qty.
▽		9006025	(000000–)	Extinguisher Kit, Fire, Ci [S20]	1
▲	1	25312	(000000–)	Extinguisher, Fire, 2.5 Lb Dry	1
▲	2	1052806	(000000–)	Plate, Mtg, Fire Extinguisher	1
▲	3	360973	(000000–)	Screw, Pan, 12–16 X 0.50, F/ Plstc	6
▲	4	02863	(000000–)	Screw, Pan, Phl, 10–16 X 0.75, Fmg/Ab	2

Fig. 23 – Battery Charger Group

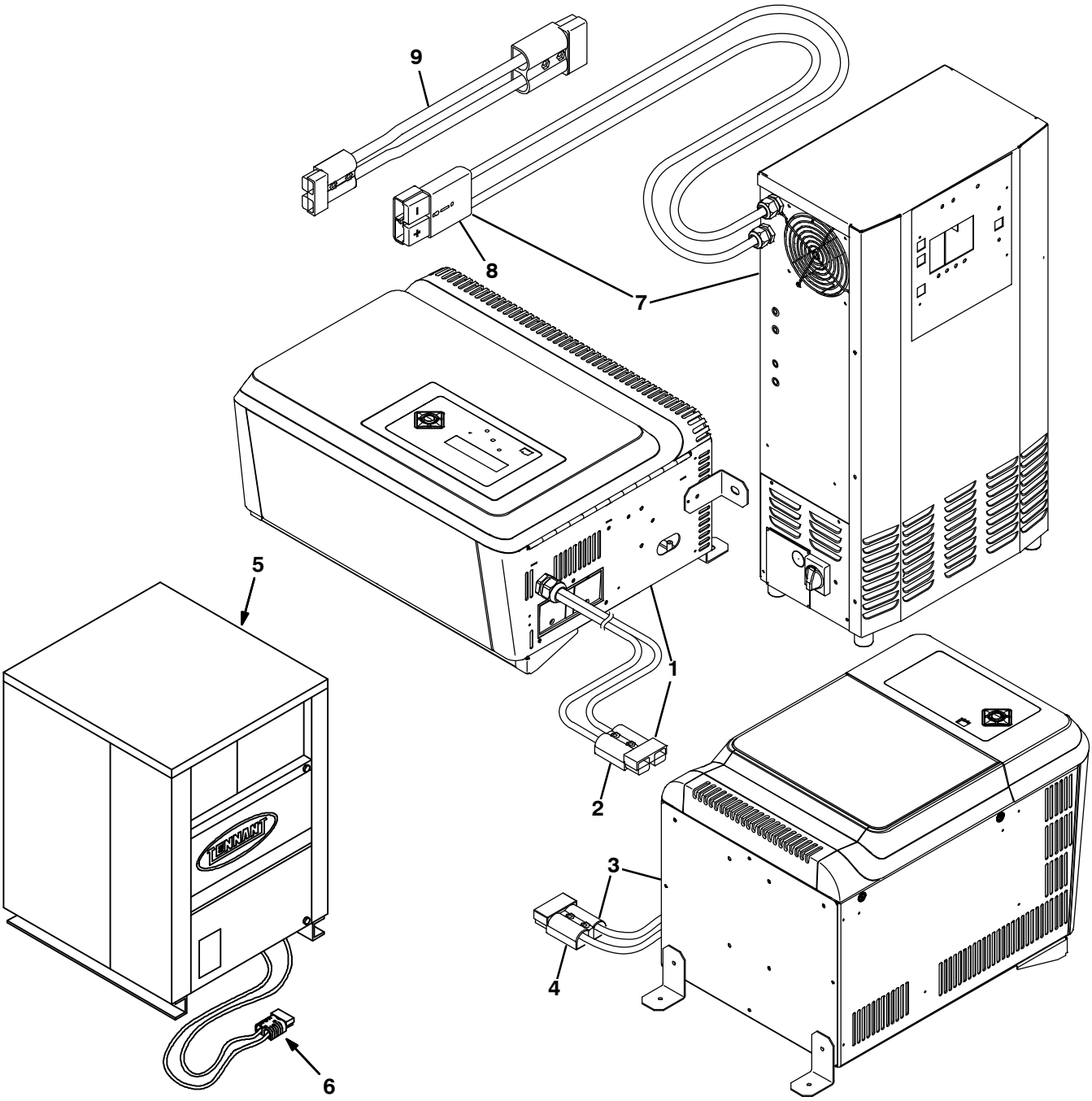

356708, 07528 – E, NA

	Ref.	Part No.	Serial Number	Description	Qty.
▽	1	1227937	(000000–)	Charger, 36vdc/144a, 208/240vac, 1 Ph	1
▲	2	22892	(000000–)	Connector, Anderson, 175a, Gray	1
▽	3	1227938	(000000–)	Charger, 36vdc/160a, 208/240vac, 3 Ph	1
▲	4	22892	(000000–)	Connector, Anderson, 175a, Gray	1
▽	5	364080	(000000–)	Charger, 36vdc 50a 230vac 1ph 50hz	1
▲	6	22892	(000000–)	Connector, Anderson, 175a, Gray	1
▽▽		9019141	(000000–)	Parts Kit, Charger, Fi [S20e]	1
▲▽	7	1207936	(000000–)	Charger, 36vdc/120a, 480vac 3ph	1
▲▲	8	01726	(000000–)	Connector, 350a, Gray	1
▲▲	9	1076641	(000000–)	Cable Assy, Sb175/Sb350, Gray, 36vdc	1

Fig. 24 – Battery Group, 36V 420Ah Wet

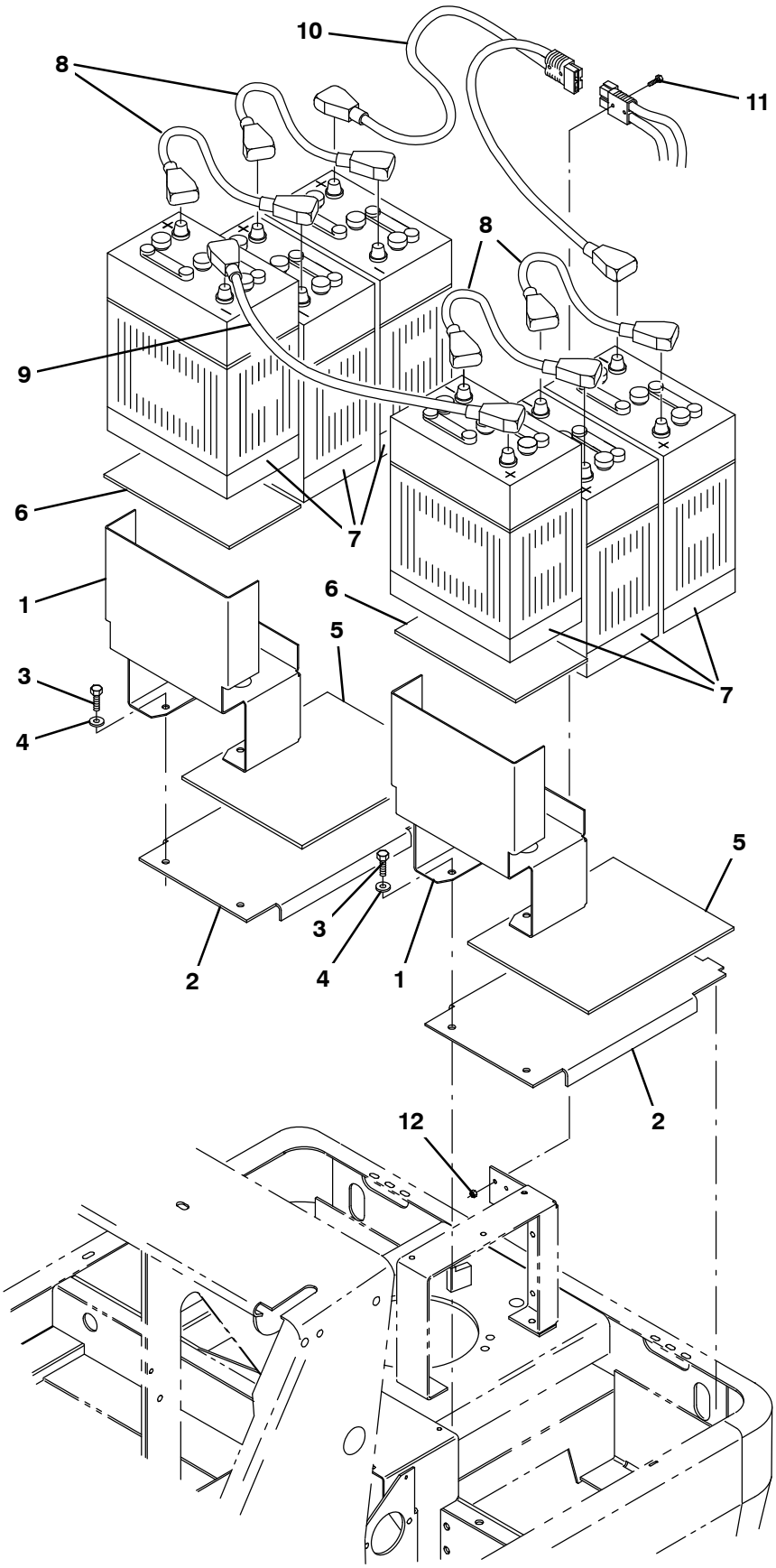

354999– E, NA

Fig. 24 – Battery Group, 36V 420Ah Wet

Ref.	Part No.	Serial Number	Description	Qty.
1	1054267	(000000–)	Bracket, Sppt, Battery	2
2	1054266	(000000–)	Channel, Sppt, Battery	2
3	39283	(000000–)	Screw, Hex, M10 X 1.50 X 25, 8.8	4
4	32492	(000000–)	Washer, Flat, 0.38, Std	4
5	361168	(000000–)	Spacer, Plywood	2
6	361169	(000000–)	Spacer, Plywood	2
7	10157	(000000–)	Battery, Wet, 06vdc 420ah	6
8	50480	(000000–)	Cable, Battery, 04ga 13.5l Blk, 2clamp	4
9	36555–1	(000000–)	Cable, Battery, 04ga 40.0l Blk, 2clamp	1
10	1050665	(000000–)	Cable Assy, Battery, 04ga, 2clamp, 175a	1
11	06946	(000000–)	Screw, Hex, M6 X 1.00 X 35, 8.8	2
12	08708	(000000–)	Nut, Hex, Lock, M6 X 1.00, Nl	2

Fig. 25 – Telemetry Group

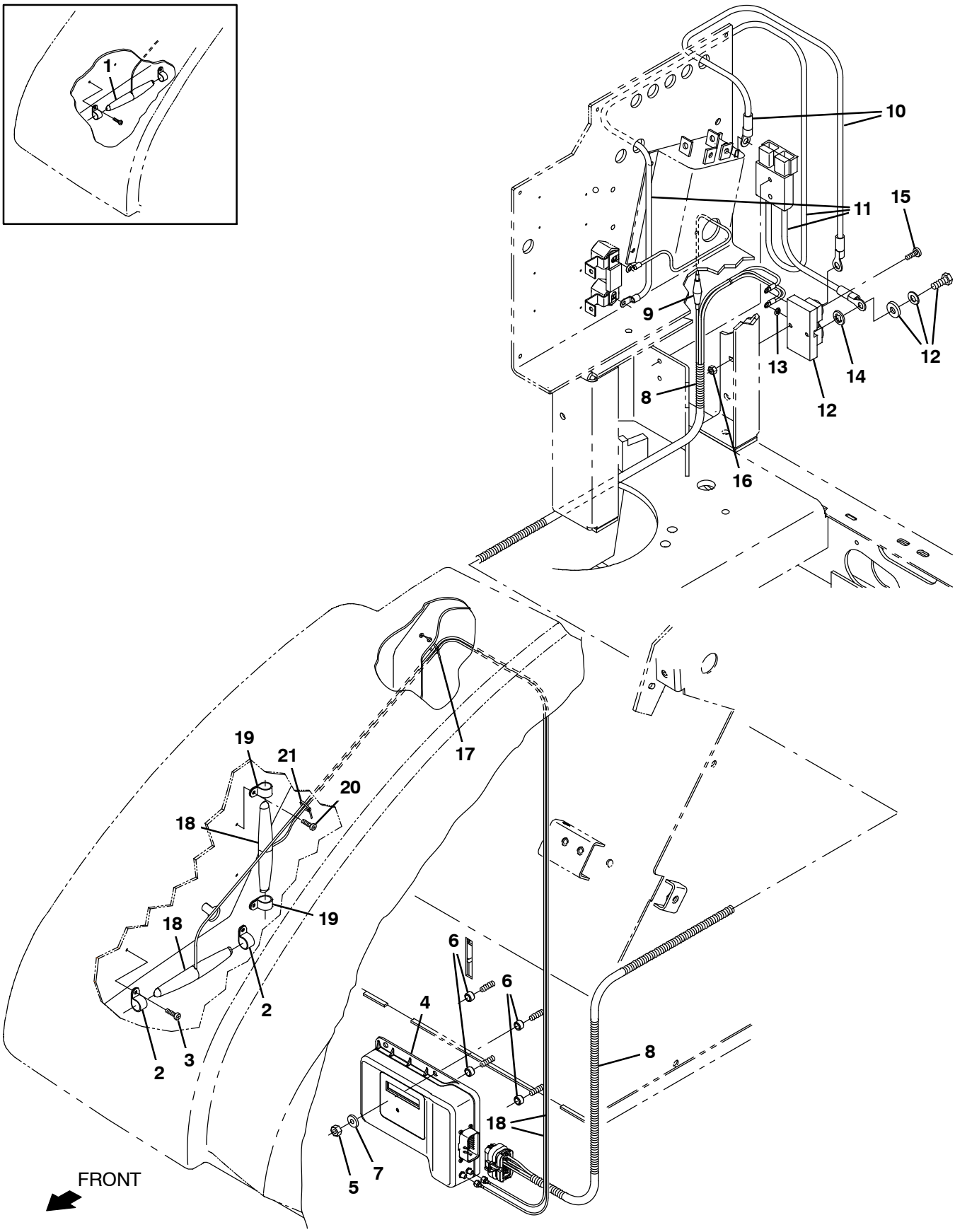

356275– E, NA

Fig. 25 – Telemetry Group

	Ref.	Part No.	Serial Number	Description	Qty.
	1	1070324	(000000–007300)	Antenna, Telem, 110 In [Gprs]	1
	2	140916	(000000–)	Clamp, Cable, Nyl, 0.62d, Nat	2
	3	382320	(000000–)	Screw, Pan, Phl, 12–16 X 0.50, F/ Plstc	2
	4	9010085	(000000–)	Control Box Assy Kit, Replmt, Telem[Usa]	1
	4	9010086	(000000–)	Control Box Assy Kit, Replmt, Telem[Intl]	1
	5	08708	(000000–)	Nut, Hex, Lock, M6 X 1.00, Nl	4
	6	222516	(000000–)	Sleeve, P/M, 0.32b 0.50d 0.3l [430ss]	4
	7	32483	(000000–)	Washer, Flat, 0.25, Sae	4
▽	8	1071293	(000000–)	Harness, Ele [Telemetry, S20e]	1
▲	9	9009990	(000000–)	Fuse, 002a, 250vdc, Cartridge	1
	10	1071294	(000000–)	Cable, 2ga, Blk [Telemetry, S20e]	1
	11	1071296	(000000–)	Cable Assy, 2ga [S20e – Telemetry]	1
	12	1070384	(000000–)	Shunt, 050mv 250a	1
	13	32980	(000000–)	Washer, Lock, Int, 10	2
	14	32988	(000000–)	Washer, Lock, Int, 0.38	2
	15	06935	(000000–)	Screw, Pan, Phl, M5 X 0.80 X 25, 4.8	2
	16	06549	(000000–)	Nut, Hex, Lock, M5 X 0.80, Nl	2
	17	49266	(000000–)	Tie, Cable, Nyl, 07.3l .19w 1.8 Max D	2
	18	1247568	(007301–)	Antenna, Telem [4g, 108”]	1
	19	140916	(007301–)	Clamp, Cable, Nyl, 0.62d, Nat	2
	20	382320	(007301–)	Screw, Pan, Phl, 12–16 X 0.50, F/ Plstc	2
	21	49266	(007301–)	Tie, Cable, Nyl, 07.3l .19w 1.8 Max D	2

Fig. 26 – Battery Group, 36V 440Ah Wet C/6

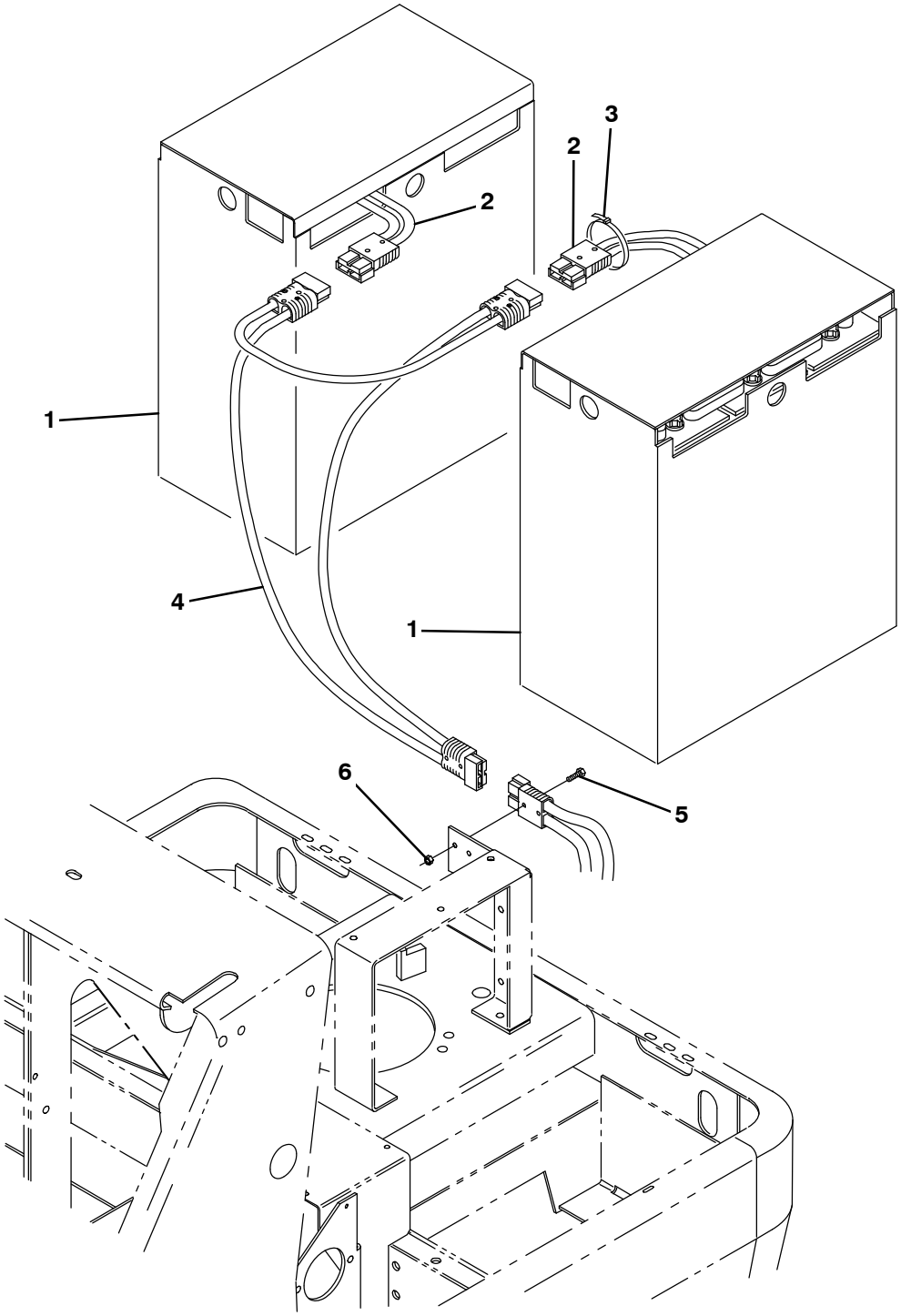

356000– E, NA

	Ref.	Part No.	Serial Number	Description	Qty.
▽	1	1049973	(000000–)	Battery, Wet, 18vdc 0440ah	2
▲	2	47985	(000000–)	Connector, Anderson, 175a, Orange	1
	3	44961	(000000–)	Tie, Cable, Nyl, 14.5l .30w 4.0 Max D	3
	4	1050077	(000000–)	Harness, Wire, Battery	1
	5	06946	(000000–)	Screw, Hex, M6 X 1.00 X 35, 8.8	4
	6	08708	(000000–)	Nut, Hex, Lock, M6 X 1.00, NI	4

Fig. 27 – Battery Kit, 36V 340Ah Wet C/6

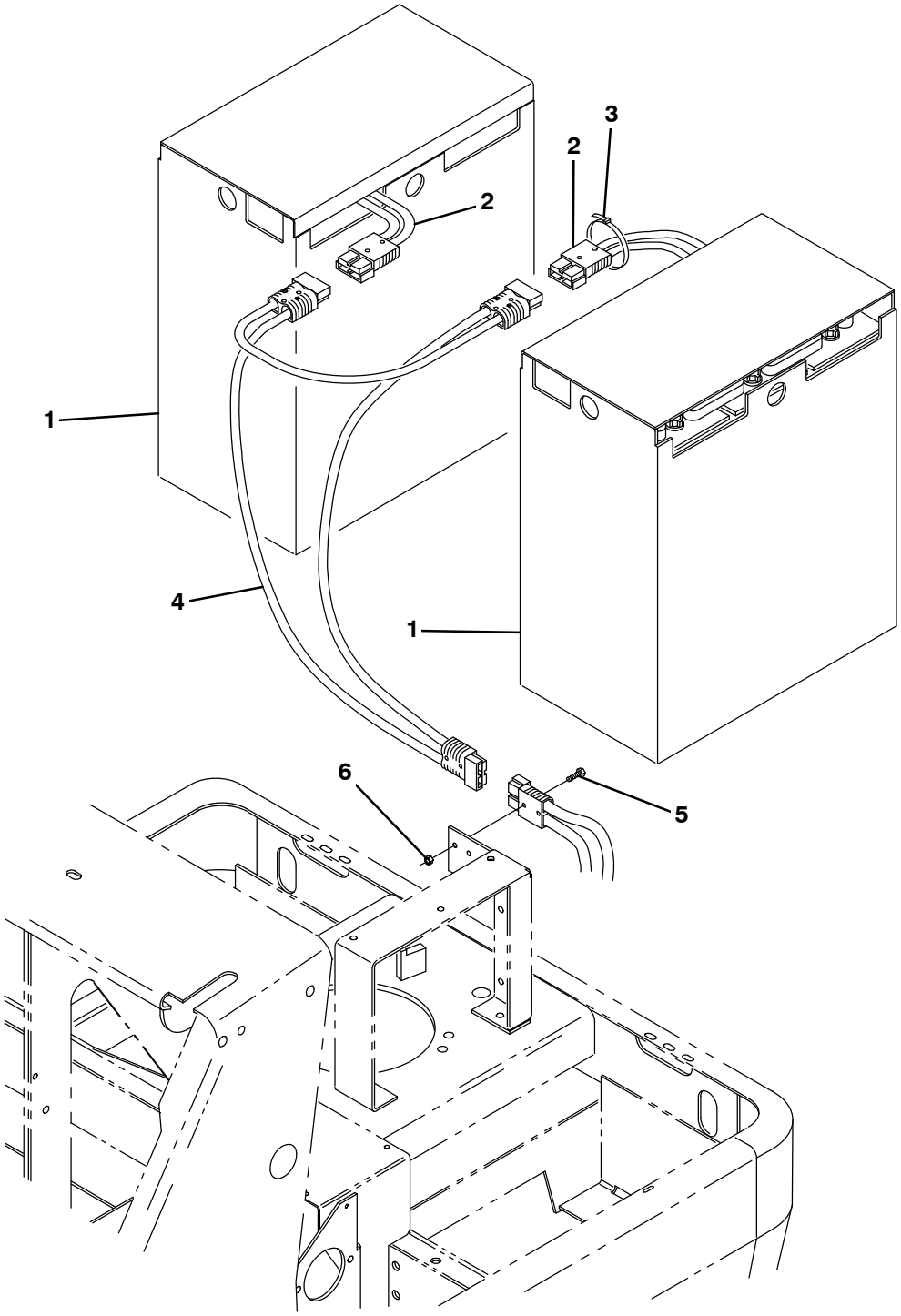

356000– E, NA

	Ref.	Part No.	Serial Number	Description	Qty.
▽	1	1049972	(000000–)	Battery, Wet, 18vdc 0340ah (Obsolete, Replaced by None)	2
▲	2	47985	(000000–)	Connector, Anderson, 175a, Orange	1
	3	44961	(000000–)	Tie, Cable, Nyl, 14.5l .30w 4.0 Max D	3
	4	1050077	(000000–)	Harness, Wire, Battery	1
	5	06946	(000000–)	Screw, Hex, M6 X 1.00 X 35, 8.8	4
	6	08708	(000000–)	Nut, Hex, Lock, M6 X 1.00, Nl	4

Fig. 28 – Wet Side Brush Dust Control Water Tank Group

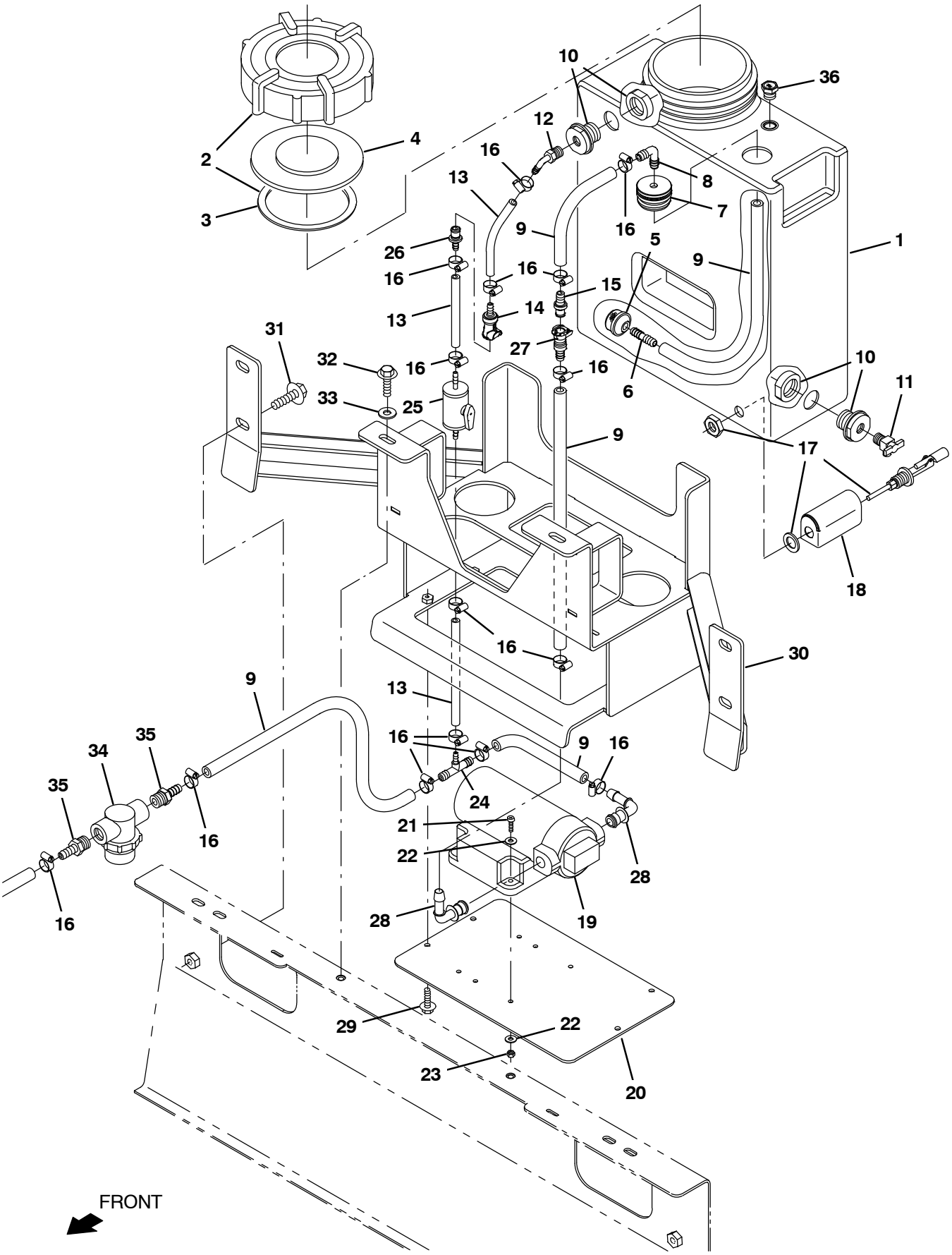

356795– E, NA

NOTE: Watershield Kit, Rh, Sbdc, Tennant Part Number 9018182, includes; Fig. 28, Fig. 29, Fig. 30, Fig. 32, and Fig. 33.

NOTE: Watershield Kit, Dual, Sbdc, Tennant Part Number 9018184, includes; Fig. 28, Fig. 29, Fig. 31, Fig. 32, and Fig. 33.

Fig. 28 – Wet Side Brush Dust Control Water Tank Group

	Ref.	Part No.	Serial Number	Description	Qty.
	1	317260	(000000–)	Tank, Detgt, Trimmed [S20]	1
▽	2	24358	(000000–)	Cap Assy, Tank, Drain	1
▲	3	1031699	(000000–)	Gasket, .19, 4.05id 5.29od [Buna]	1
	4	86636	(000000–)	Plug, Cap, Nat	1
	5	20952	(000000–)	Screen, Pump	1
	6	20950	(000000–)	Fitting, Plstc, Str, Bm06/Bm06	1
	7	20944	(000000–)	Grommet, Pye, 0.37id, F/1.5h, .13 Matl	1
	8	20951	(000000–)	Fitting, Plstc, E90, Bm06/Bm06	1
	9	1014976	(000000–)	Hose, Afmkt, Pvc, Brd, 0.38id, 08ft, Clr	1
	10	1052026	(000000–)	Fitting, Plstc, Str, Pf04/Pf04, Bh	2
	11	51305	(000000–)	Fitting, Draincock, E90, .25npt	1
	12	1011170	(000000–)	Fitting, Plstc, E90, Bm04/Pm04, Nyl	1
	13	1006415	(000000–)	Hose, Afmkt, Pvc, Clr, 0.25id, 03ft	1
	14	1002898	(000000–)	Fitting, Plstc, Str, Bm04, Cplg,Fem[Tco]	1
	15	1203814	(000000–)	Fitting, Plstc, Str, Bm06, Cplg, Male	1
	16	43844	(000000–)	Clamp, Hose, Wormdrive, 0.25–0.62d, .31w	15
	17	385685	(000000–)	Sensor, Level, Liq, 14vdc 01a .62–11	1
	18	1019285	(000000–)	Bracket, Protector, Float Switch	1
	19	1045633	(000000–)	Pump, Soltn, 36vdc, 65psi [Fast Ii+]	1
	20	1232471	(000000–)	Plate, Pump Mtg	1
	21	06930	(000000–)	Screw, Pan, Phl, M4 X 0.70 X 30, 4.8	4
	22	19066	(000000–)	Washer, Flat, 0.25b 0.56d .05, Pl, 10	8
	23	33932	(000000–)	Nut, Hex, Lock, M4 X 0.70, Nl, Ss	4
	24	61456	(000000–)	Fitting, Plstc, Tee, Bm03/Bm06/Bm06, Br	1
	25	1232030	(000000–)	Valve, Shutoff, Bm04/Bm04, Pvc	1
	26	1204338	(000000–)	Fitting, Plstc, Str, Bm04, Cplg, Male	1
	27	1203454	(000000–)	Fitting, Plstc, Str, Bm06, Cplg, Fem	1
	28	1049259	(000000–)	Fitting, Nyl, Qdc, E90, Bm06/ Qm10	2
	29	1037345	(000000–)	Screw, Hex, M6 X 1.00 X 30, 9.8, Sems	4
	30	1232379	(000000–)	Bracket Wldt, Tank/Pump Sppt [S20]	1
	31	1037358	(000000–)	Screw, Hex, M10 X 1.50 X 35, 9.8, Sems	4
	32	1037346	(000000–)	Screw, Hex, M8 X 1.25 X 25, 9.8, Sems	2
	33	32491	(000000–)	Washer, Flat, 0.31, Std	2
▽	34	1076437	(000000–)	Filter, In–Line, Pf06/Pf06 60 Micron	1
▲		1076438	(000000–)	Screen, Fltr, 60 Micron, Caged Ss	1
	35	150538	(000000–)	Fitting, Plstc, Str, Bm06/Pm06	2
	36	1241776	(000000–)	Fitting, Brs, 3/8npt, Valve, Breather	1

Fig. 29 – Wet Side Brush Dust Control Water Tank Retainer Group

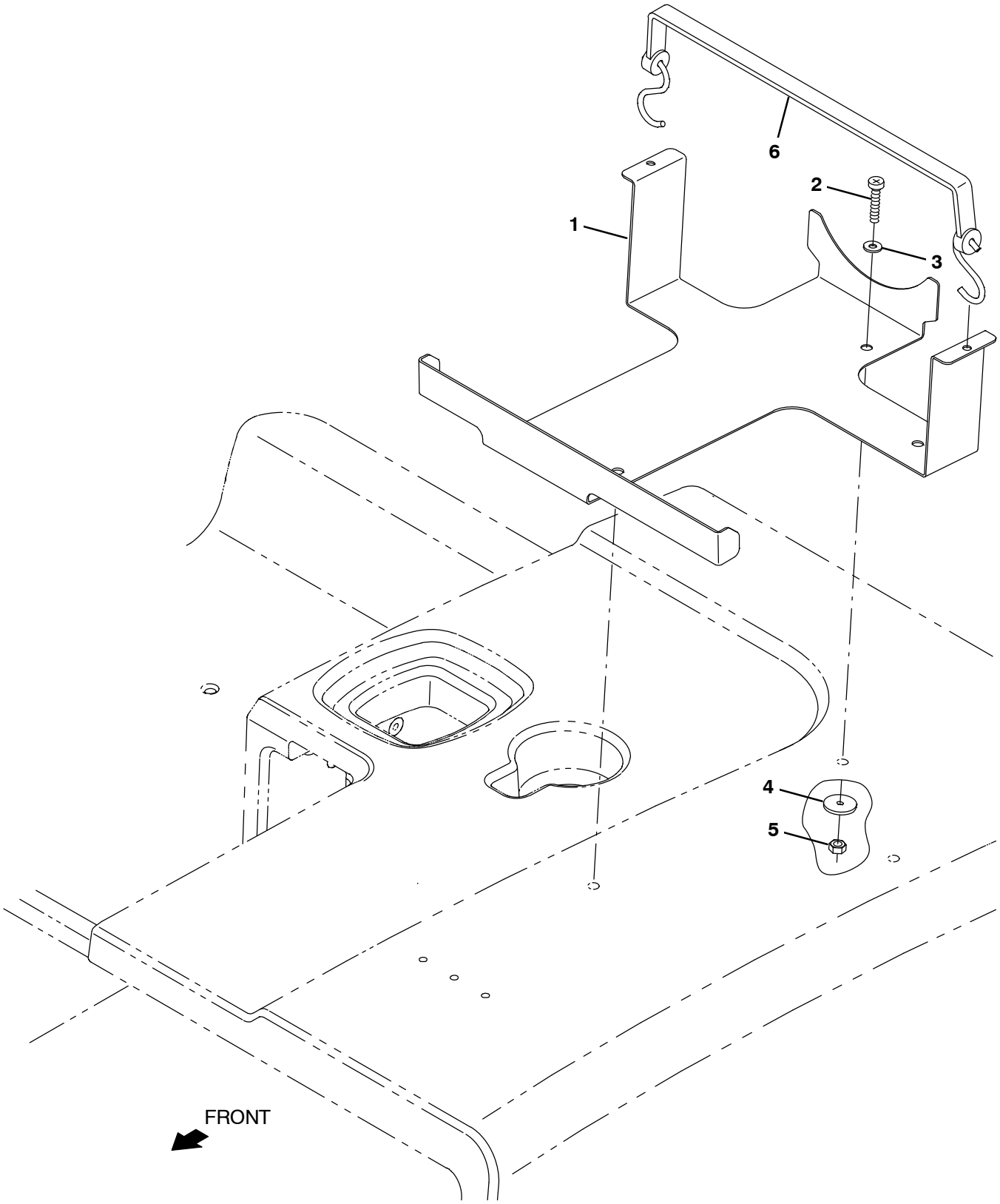

356793– NA

NOTE: Watershield Kit, Rh, Sbdc, Tennant Part Number 9018182, includes; Fig. 28, Fig. 29, Fig. 30, and Fig. 32.
NOTE: Watershield Kit, Dual, Sbdc, Tennant Part Number 9018184, includes; Fig. 28, Fig. 29, Fig. 31, and Fig. 32

Fig. 29 – Wet Side Brush Dust Control Water Tank Retainer Group

Ref.	Part No.	Serial Number	Description	Qty.
1	1233457	(000000–)	Bracket, Tank Retainer	1
2	317232	(000000–)	Screw, Pan, Phl, M6 X 1.00 X 60, Zn	3
3	32483	(000000–)	Washer, Flat, 0.25, Sae	3
4	386063	(000000–)	Washer, Flat, 0.25b 1.12d .12, Ss	3
5	08708	(000000–)	Nut, Hex, Lock, M6 X 1.00, Nl	3
6	33671	(000000–)	Strap, Rbr, Tie–Down, 19.0l, 2/ Hook	1

Fig. 30 – Wet Right Hand Side Brush Dust Control Spray Nozzle Group

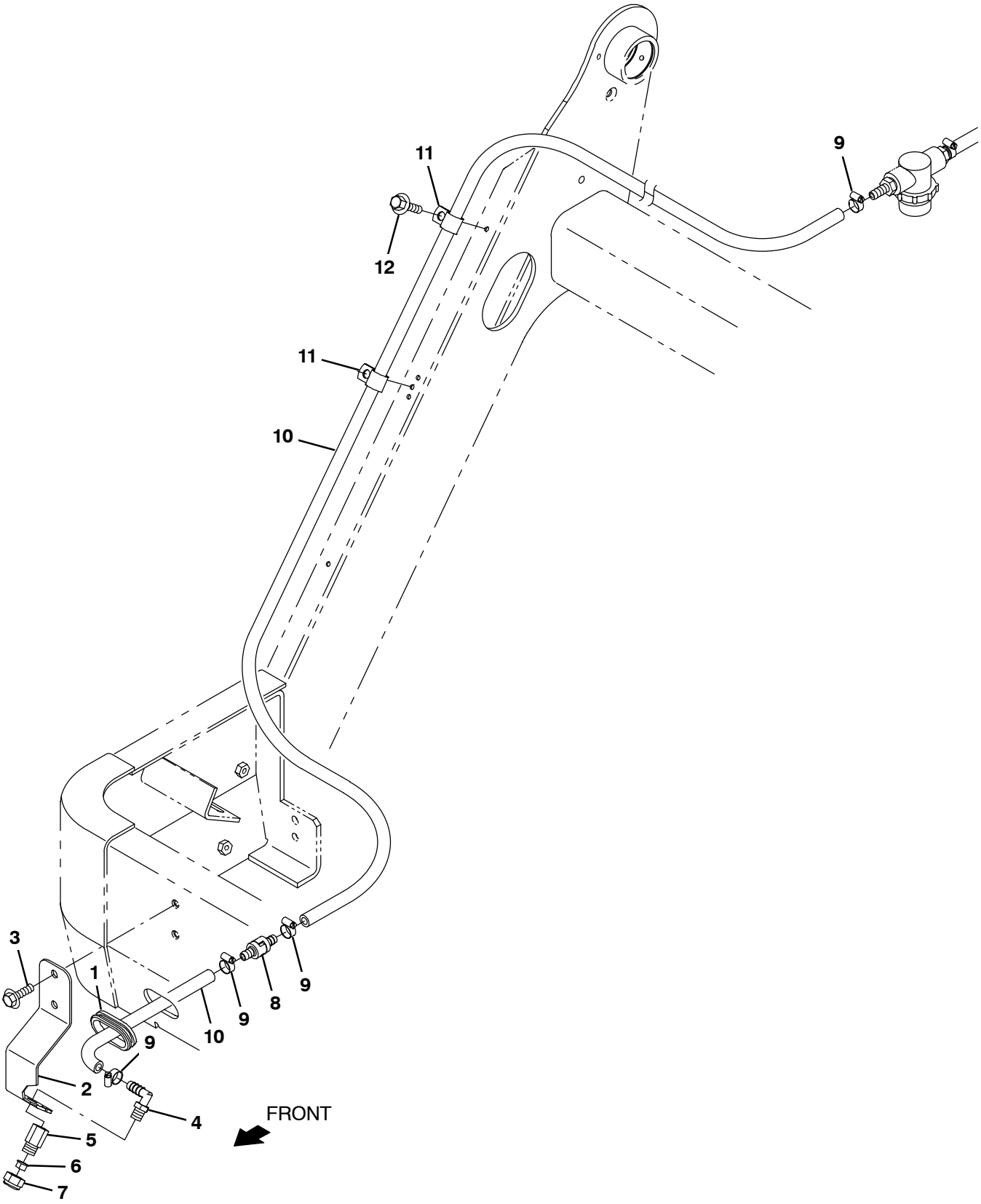

356789– NA

NOTE: Watershield Kit, Rh, Sbdc, Tennant Part Number 9018182, includes; Fig. 28, Fig. 29, Fig. 30, and Fig. 32.
NOTE: Watershield Kit, Dual, Sbdc, Tennant Part Number 9018184, includes; Fig. 28, Fig. 29, Fig. 31, and Fig. 32

Fig. 30 – Wet Right Hand Side Brush Dust Control Spray Nozzle Group

Ref.	Part No.	Serial Number	Description	Qty.
1	10632–13	(000000–)	Grommet, Rbr, 1.50id, F/1.8h, .19 Matl	1
2	1232473	(000000–)	Bracket, Mtg, Sgl Spray Nozzle [S20]	1
3	1037346	(000000–)	Screw, Hex, M8 X 1.25 X 25, 9.8, Sems	2
4	57248	(000000–)	Fitting, Plstc, E90, Bm06/Pm04, Nyl	1
5	1232066	(000000–)	Fitting, Body, Nozzel, Brs	1
6	1232065	(000000–)	Nozzle, Spray, 110 Deg, 0.05 Gpm	1
7	769778	(000000–)	Fitting, Cap, Brs	1
8	1015455	(000000–)	Valve, Check, 0005psi Bm06/Bm06	1
9	43844	(000000–)	Clamp, Hose, Wormdrive, 0.25–0.62d, .31w	4
10	1014976	(000000–)	Hose, Afmkt, Pvc, Brd, 0.38id, 08ft, Clr	1
11	07471	(000000–)	Clamp, Cable, Stl, 0.75d X 0.75w, 1hole	2
12	763045	(000000–)	Screw, Hex, M8 X 1.25 X 20, Fmg	2

Fig. 31 – Wet Dual Side Brush Dust Control Spray Nozzle Group

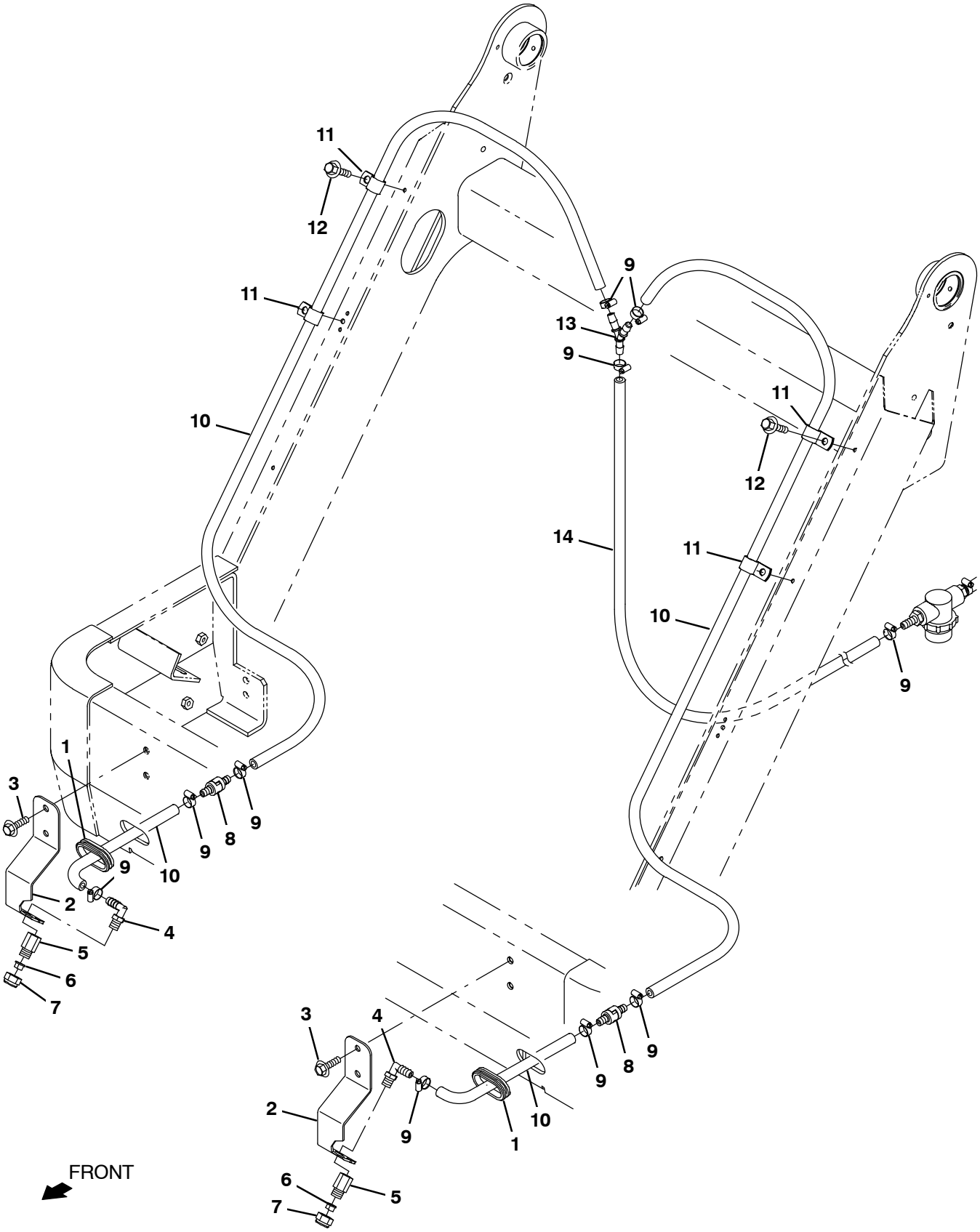

356790– NA

NOTE: Watershield Kit, Rh, Sbdc, Tennant Part Number 9018182, includes; Fig. 28, Fig. 29, Fig. 30, and Fig. 32.
NOTE: Watershield Kit, Dual, Sbdc, Tennant Part Number 9018184, includes; Fig. 28, Fig. 29, Fig. 31, and Fig. 32

Fig. 31 – Wet Dual Side Brush Dust Control Spray Nozzle Group

Ref.	Part No.	Serial Number	Description	Qty.
1	10632–13	(000000–)	Grommet, Rbr, 1.50id, F/1.8h, .19 Matl	1
2	1232473	(000000–)	Bracket, Mtg, Sgl Spray Nozzle [S20]	2
3	1037346	(000000–)	Screw, Hex, M8 X 1.25 X 25, 9.8, Sems	4
4	57248	(000000–)	Fitting, Plstc, E90, Bm06/Pm04, Nyl	2
5	1232066	(000000–)	Fitting, Body, Nozzel, Brs	2
6	1232065	(000000–)	Nozzle, Spray, 110 Deg, 0.05 Gpm	2
7	769778	(000000–)	Fitting, Cap, Brs	2
8	1015455	(000000–)	Valve, Check, 0005psi Bm06/Bm06	2
9	43844	(000000–)	Clamp, Hose, Wormdrive, 0.25–0.62d, .31w	9
10	1014981	(000000–)	Hose, Afmkt, Pvc, Brd, 0.38id, 20ft, Clr	1
11	07471	(000000–)	Clamp, Cable, Stl, 0.75d X 0.75w, 1hole	4
12	763045	(000000–)	Screw, Hex, M8 X 1.25 X 20, Fmg	4
13	1017255	(000000–)	Fitting, Plstc, Y, Bm06/Bm06/Bm06, Nyl	1
14	1014976	(000000–)	Hose, Afmkt, Pvc, Brd, 0.38id, 08ft, Clr	1

Fig. 32 – Wet Side Brush Dust Control Electrical Group

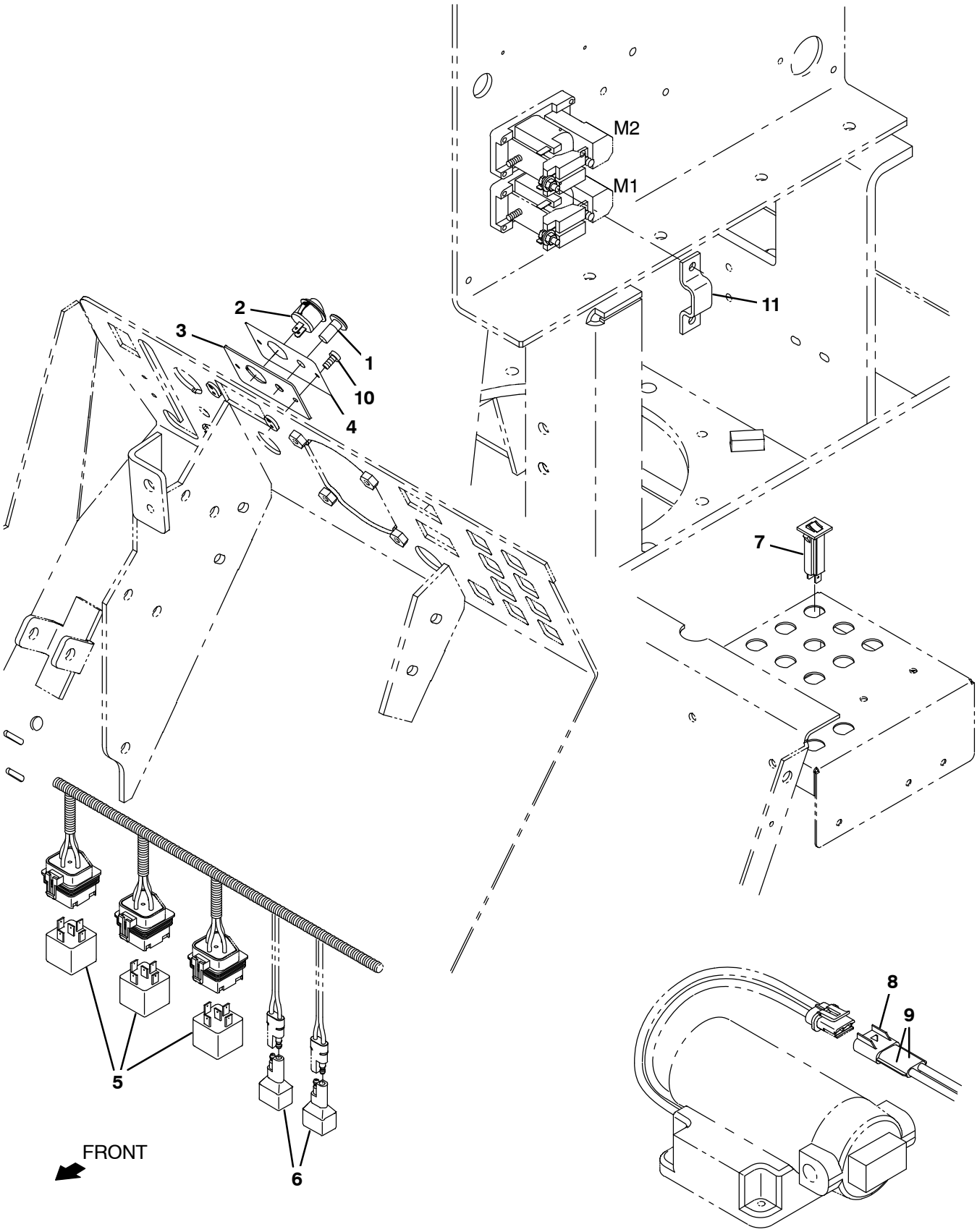

356794– E, NA

NOTE: Watershield Kit, Rh, Sbdc, Tennant Part Number 9018182, includes; Fig. 28, Fig. 29, Fig. 30, and Fig. 32.
NOTE: Watershield Kit, Dual, Sbdc, Tennant Part Number 9018184, includes; Fig. 28, Fig. 29, Fig. 31, and Fig. 32

Fig. 32 – Wet Side Brush Dust Control Electrical Group

Ref.	Part No.	Serial Number	Description	Qty.
1	1238242	(000000–)	Light, Led, .312d, 36 Vdc [Tri–Color]	1
2	1233938	(000000–)	Switch, Rocker, Spst, Round	1
3	1232484	(000000–)	Plate, Switch / Light Mtg	1
4	1233799	(000000–)	Label, Watershield [S20]	1
5	222111	(000000–)	Relay, 36vdc, 20a [Pokorny]	3
6	222290	(000000–)	Diode, Ele, Plug	2
7	1064188	(000000–)	Circuitbreaker, 15.0a, Resetable	1
8	25850	(000000–)	Connector, Mal, 2cav, Mp280 Sealed	1
9	78951	(000000–)	Terminal, Fem, Mp280, Sealed, 18–16ga	2
10	1069315	(000000–)	Screw, Pan, Phl, M4 X 0.70 X 10, Blk	2
11	1240481	(000000–)	Buss Bar, Copper, Offset, Contactor	1

Fig. 33 – Wet Side Brush Dust Control Wire Harness Group

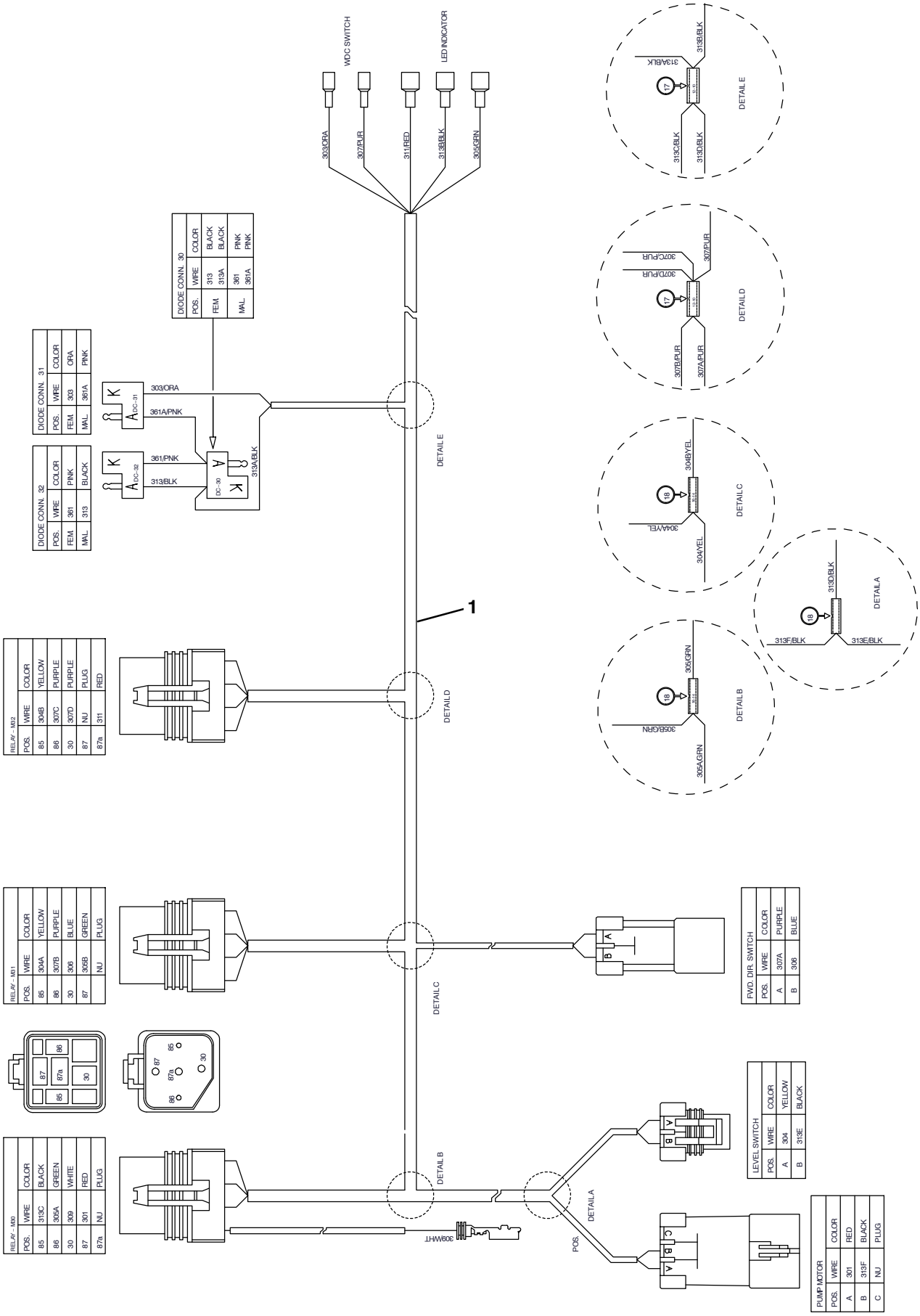

356792– NA

Fig. 33 – Wet Side Brush Dust Control Wire Harness Group

Ref.	Part No.	Serial Number	Description	Qty.
1	1234106	(000000–)	Harness, Cntrl, Wet Dust [S20ic]	1

Fig. 34 – HEPA Filter Hopper Cover Group

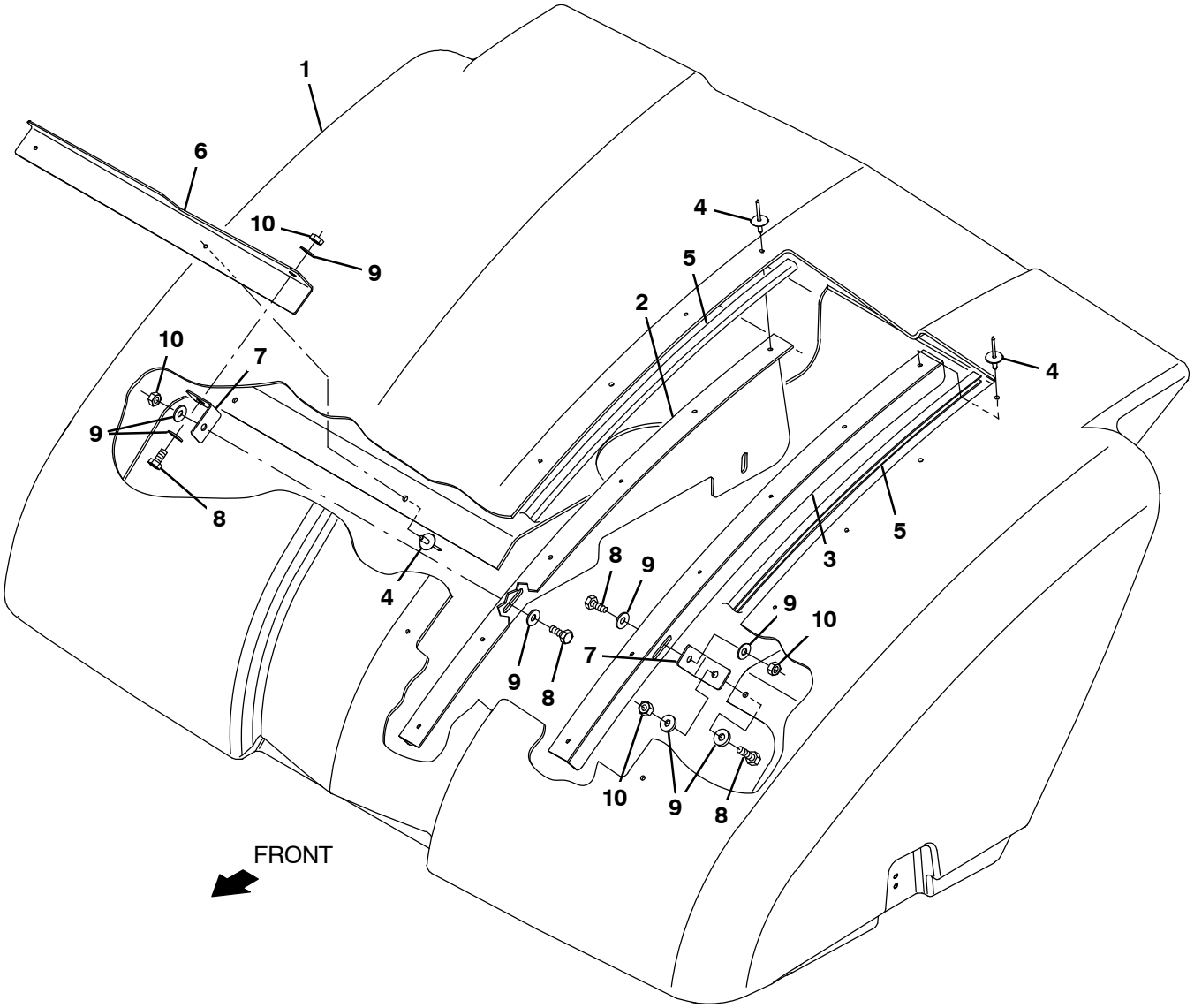

356804 – NA

Fig. 34 – HEPA Filter Hopper Cover Group

Ref.	Part No.	Serial Number	Description	Qty.
1	1076382	(000000–)	Cover, Hppr, Re–Work [S20]	1
2	1076384	(000000–)	Hood, Stiffener Wldt Rh [S20]	1
3	1076354	(000000–)	Hood, Stiffener Wldt Lh [S20]	1
4	68567	(000000–)	Rivet, Blind, .187d X 0.53 X .62d, Alm	15
5	1046410	(000000–)	Molding, Afmkt, Trim, Pvc, .18 .31, 20ft	1
6	1076355	(000000–)	Bar, Sppt, Hppr Cover [S20]	1
7	1076356	(000000–)	Bracket, Stiffener [S20]	1
8	06943	(000000–)	Screw, Hex, M6 X 1.00 X 20, 8.8	4
9	32483	(000000–)	Washer, Flat, 0.25, Sae	8
10	08708	(000000–)	Nut, Hex, Lock, M6 X 1.00, Nl	4

Fig. 35 – HEPA Filter Box Group

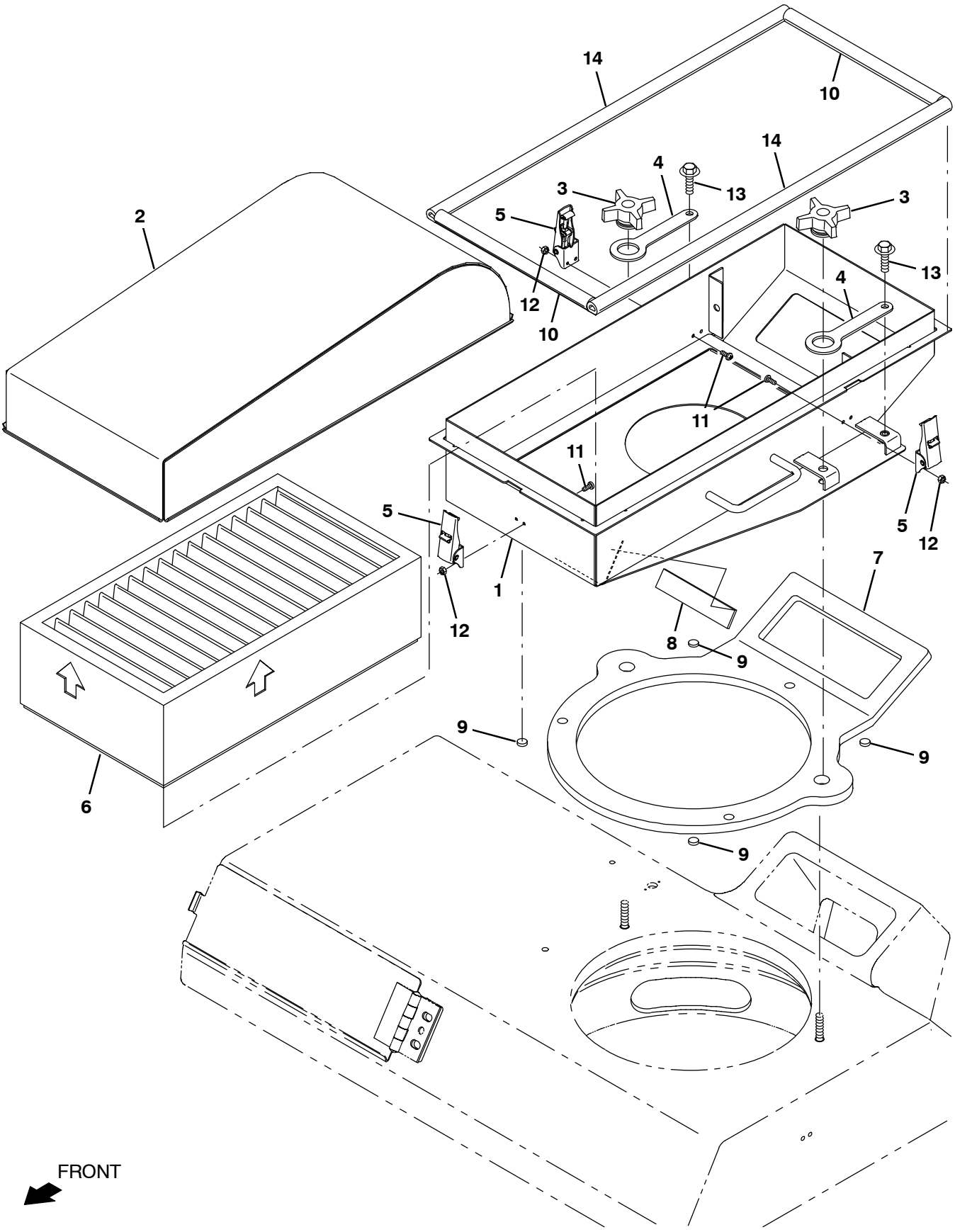

356803 – NA

Fig. 35 – HEPA Filter Box Group

Ref.	Part No.	Serial Number	Description	Qty.
1	1076253	(000000–)	Filter Box Wldt, Hepa, Lower [S20]	1
2	1076249	(000000–)	Hepa Airbox, Upper [S20]	1
3	1048335	(000000–)	Knob, Star, 2.75d 4ear 1.1l M8x1.25	2
4	1048353	(000000–)	Strap, Rbr	2
5	384418	(000000–)	Latch, Door [Southco 91–562–07]	3
6	1076004	(000000–)	Element, Fltr, Hepa, 10 X 18 X 4.87 S20	1
7	1044356	(000000–)	Gasket, Cover	1
8	764139	(000000–)	Strip, Rbr, Short	1
9	64757	(000000–)	Bumper, Rbr, Adh, 0.50d 0.14th	4
10	1246677	(000000–)	Seal, Afmkt, Bulb, Str, 0.50h .50w 1ft	2
11	49697	(000000–)	Screw, Pan, Phl, M4 X 0.70 X 10, Ss	6
12	33932	(000000–)	Nut, Hex, Lock, M4 X 0.70, Nl, Ss	6
13	1037346	(000000–)	Screw, Hex, M8 X 1.25 X 25, 9.8, Sems	2
14	1246678	(000000–)	Seal, Afmkt, Bulb, Str, 0.50h .50w 3ft	2

Fig. 36 – Spotlight Group, Blue

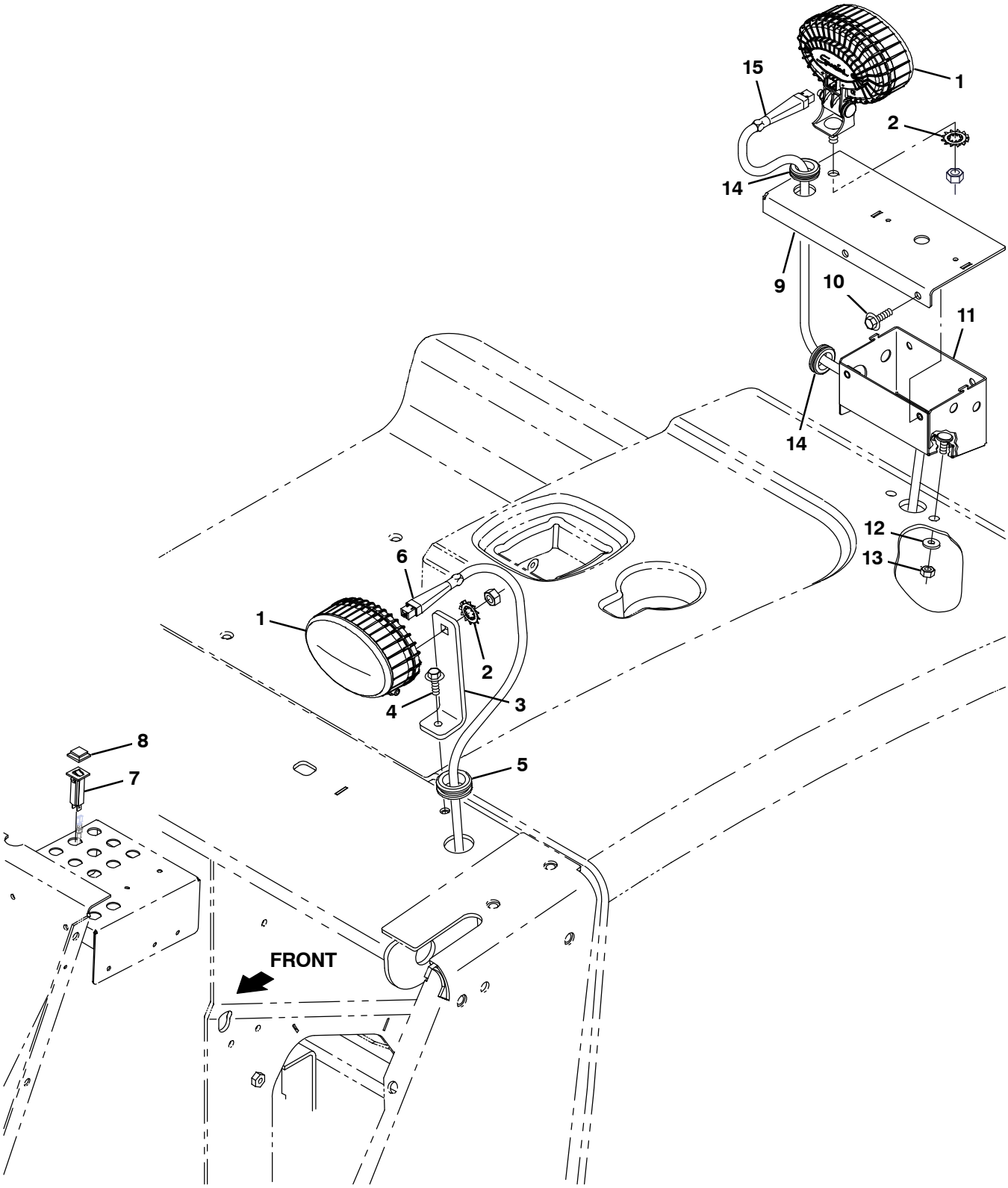

357136 – E

Fig. 36 – Spotlight Kit, Blue

	Ref.	Part No.	Serial Number	Description	Qty.
▽		9020918	(000000–)	Spotlight, Blue, Ci [S20]	1
▲	1	1240687	(000000–)	Light, Spot, Blue, Led	2
▲	2	41143	(000000–)	Washer, Lock, Int–Ext, 0.50	1
▲	3	1076786	(000000–)	Brkt, Blu Spotlight, Fr, Frame Mtg	1
▲	4	1037354	(000000–)	Screw, Hex, M8 X 1.25 X 30, 9.8, Sems	1
▲	5	10632–1	(000000–)	Grommet, Rbr, 1.06id, F/1.4h, .19 Matl	2
▲	6	1076772	(000000–)	Harness, Blu Spotlight [S20]	1
▲	7	1064184	(000000–)	Circuitbreaker, 02.5a, Resetable	1
▲	8	1064191	(000000–)	Boot, Circuitbreaker	1
▲	9	1252057	(000000–)	Brkt, Blu Spotlight, Rr, Frame Mtg	1
▲	10	1020341	(000000–)	Screw, Hex, M8 X 1.25 X 20, Ss, Sems	2
▲	11	1049554	(000000–)	Angle, Mtg, Alarm	1
▲	12	32491	(000000–)	Washer, Flat, 0.31, Std	2
▲	13	08709	(000000–)	Nut, Hex, Lock, M8 X 1.25, Nl	2
▲	14	10632	(000000–)	Grommet, Rbr, 0.89id, F/1.2h, .14 Matl	2
▲	15	1256657	(000000–)	Harness, Blu Spotlight [S20]	1
▲		763114	(000000–)	Tie, Cable, 11.3l, 2.75d Max	10

Fig. 37 – Spotlight Wire Harnesses Group

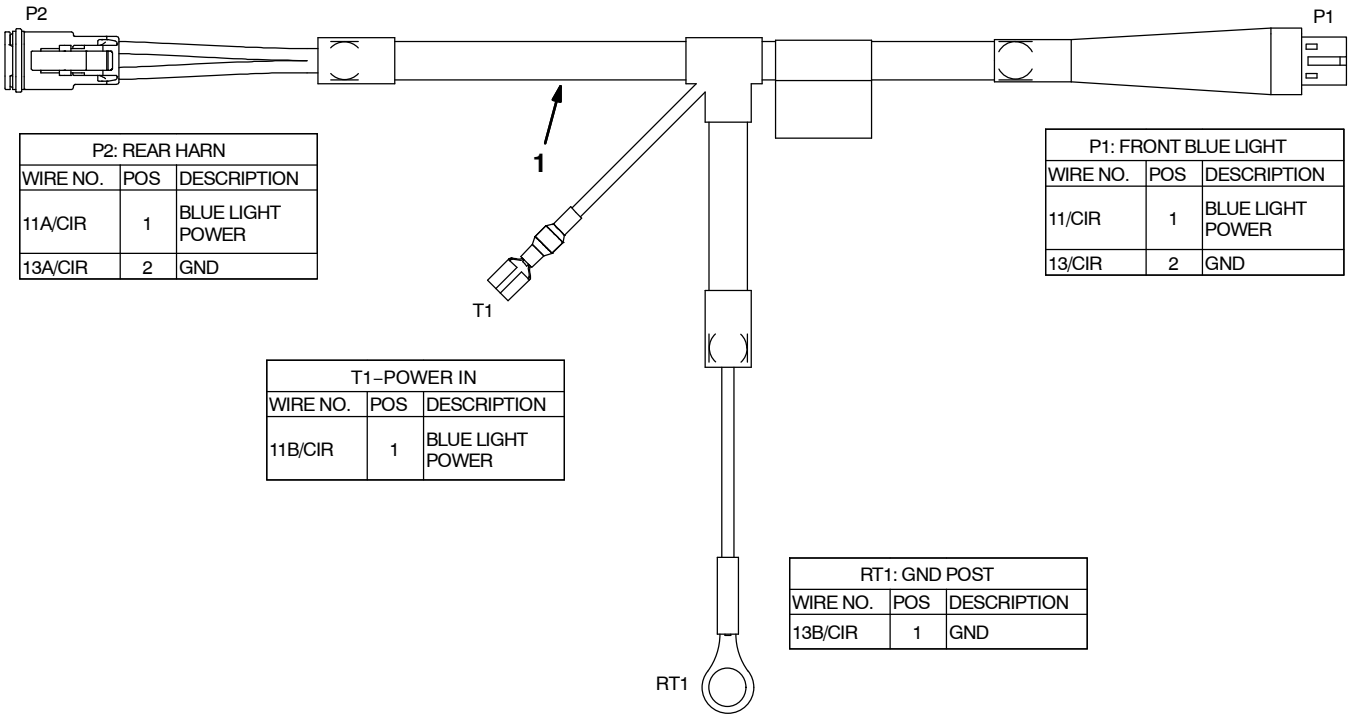

P2: REAR HARN		
WIRE NO.	POS	DESCRIPTION
11A/CIR	1	BLUE LIGHT POWER
13A/CIR	2	GND

P1: FRONT BLUE LIGHT		
WIRE NO.	POS	DESCRIPTION
11/CIR	1	BLUE LIGHT POWER
13/CIR	2	GND

T1–POWER IN		
WIRE NO.	POS	DESCRIPTION
11B/CIR	1	BLUE LIGHT POWER

RT1: GND POST		
WIRE NO.	POS	DESCRIPTION
13B/CIR	1	GND

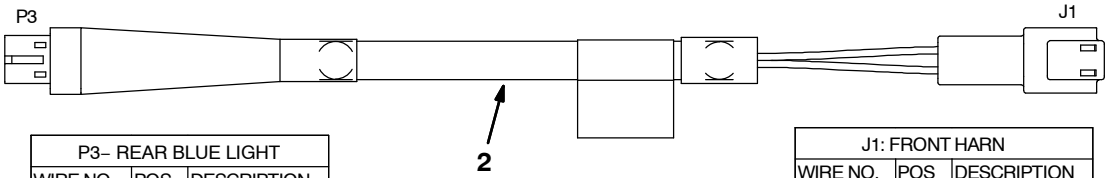

P3– REAR BLUE LIGHT		
WIRE NO.	POS	DESCRIPTION
11C/SQU	1	BLUE LIGHT POWER
13C/SQU	2	GND

J1: FRONT HARN		
WIRE NO.	POS	DESCRIPTION
11C/CIR	1	BLUE LIGHT POWER
13C/CIR	2	GND

357138

Ref.	Part No.	Serial Number	Description	Qty.
1	1076772	(000000–)	Harness, Blu Spotlight [S20]	1
2	1256657	(000000–)	Harness, Blu Spotlight [S20]	1

Fig. 38 – Weather Proof Pouch Group

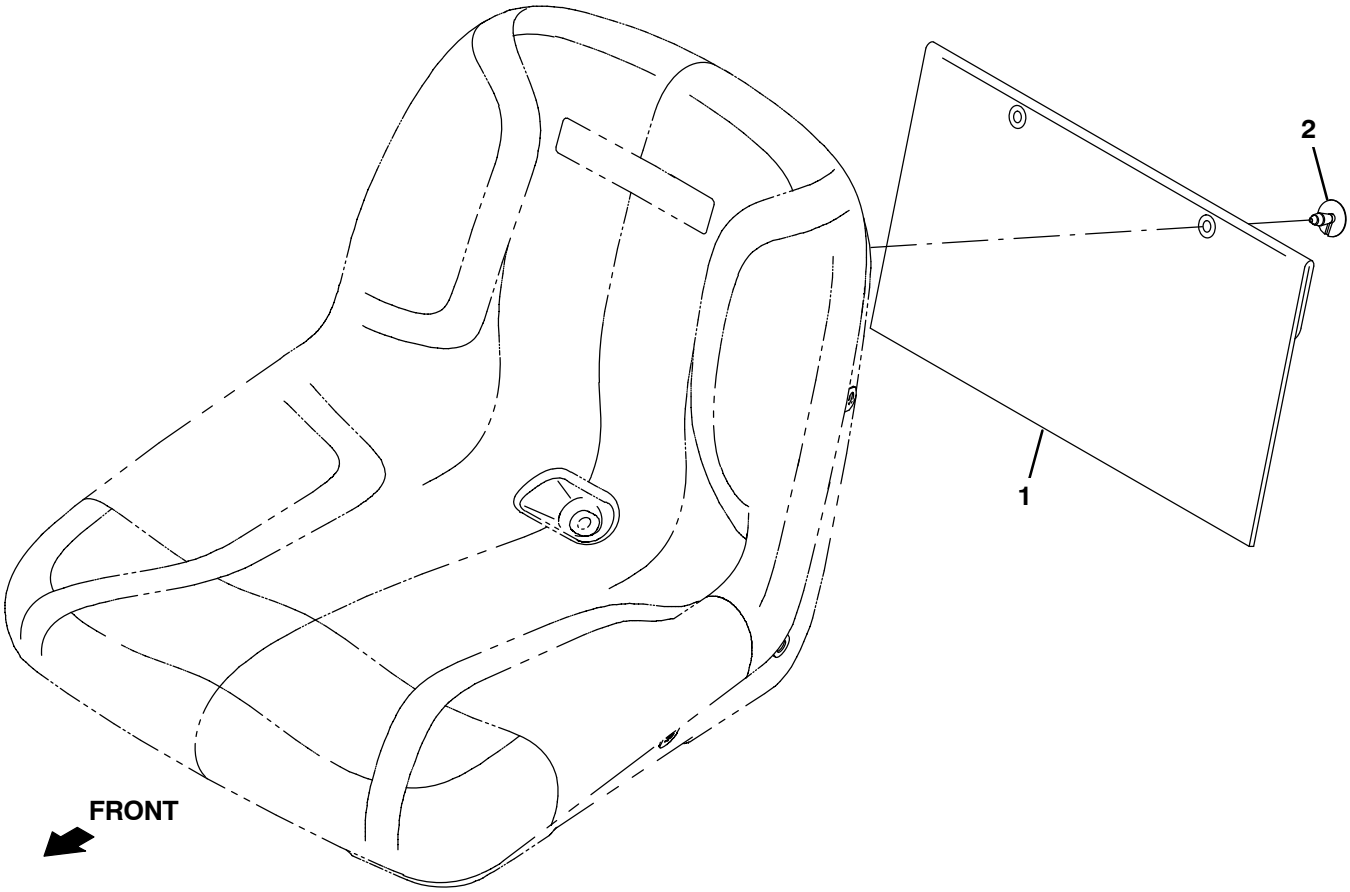

357134

	Ref.	Part No.	Serial Number	Description	Qty.
▽		9020593	(000000–)	Pouch, Manual, Weather Proof	1
▲	1	68275	(000000–)	Pouch	1
▲	2	72968	(000000–)	Rivet, Plstc, .250d X 0.90	2

Fig. 39 - Tow Hook Kit (007663-)

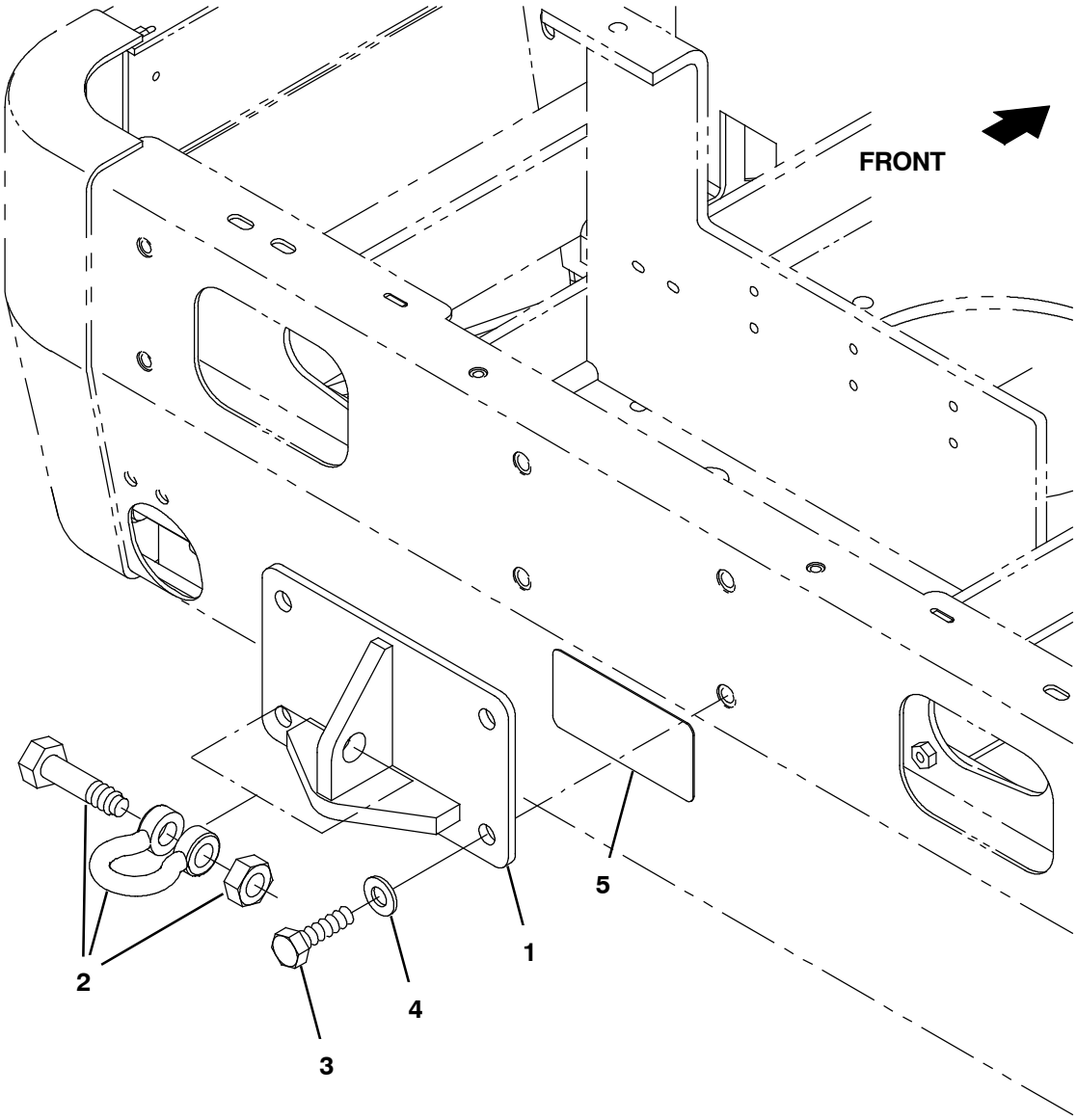

357135

	Ref.	Part No.	Serial Number	Description	Qty.
▽		9021038	(007663-)	Frame Kit, Hook, Winch	1
▲	1	1076795	(007663-)	Plate Wldt, Winch Hook	1
▲	2	1076741	(007663-)	Anchor [Shackle], .625 Thick	1
▲	3	06968	(007663-)	Screw, Hex, M12 X 1.75 X 35, 8.8	4
▲	4	32486	(007663-)	Washer, Flat, 0.53b 1.06d .10, Stl, Pl	4
▲	5	1251735	(007663-)	Label, Hook, Winch	1

Fig. 40 – Documentation Group (Online Only)

E, NA

Ref.	Part No.	Serial Number	Description	Qty.
	9006704	(000000–)	Manual, Oprtr [S20 Elec, En]	1
	9006705	(000000–)	Manual, Oprtr [S20 Elec, Es]	1
	9006706	(000000–)	Manual, Oprtr [S20 Elec, Fr]	1
	9006707	(000000–)	Manual, Oprtr [S20 Elec, Jp]	1
	9006708	(000000–)	Manual, Parts [S20 Ele, En]	1
	9006710	(000000–)	Manual, Oprtr [S20 Ele, Cn]	1
	9006711	(000000–)	Manual, Oprtr [S20 Ele, Ptb]	1
	9006724	(000000–)	Manual, Service [S20 Gas/Lpg/Dsl, En]	1
	9009383	(000000–)	Instr, Use&Care, Wallchart [Ts20] (ONLINE ONLY)	1

To view, print, or download the latest Parts manual, other language Operator manuals, and Use and Care Guides (wall charts), visit:

www.tennantco.com/manual

SECTION 4

Contents **Page**

Fig. 1 – Hydraulic Gear Motor Breakdown, 361026 4–2
Fig. 2 – Hydraulic Control Valve Breakdown, 361012 4–4
Fig. 3 – Hydraulic Steering Valve Breakdown, 74173 4–6
Fig. 4 – Electric Motor Breakdown, 360065 4–7
Fig. 5 – Electric Motor Breakdown, 360175 4–8
Fig. 6 – Hydraulic Solenoid Valve Breakdown, 1046688 4–9
Fig. 7 – Hydraulic Solenoid Valve Breakdown, 1045994 4–10
Fig. 8 – Hydraulic Solenoid Valve Breakdown, 1237088 4–11
Fig. 9 – Hydraulic Solenoid Valve Breakdown, 1237086 4–12

Fig. 1 – Hydraulic Gear Motor Breakdown, 361026

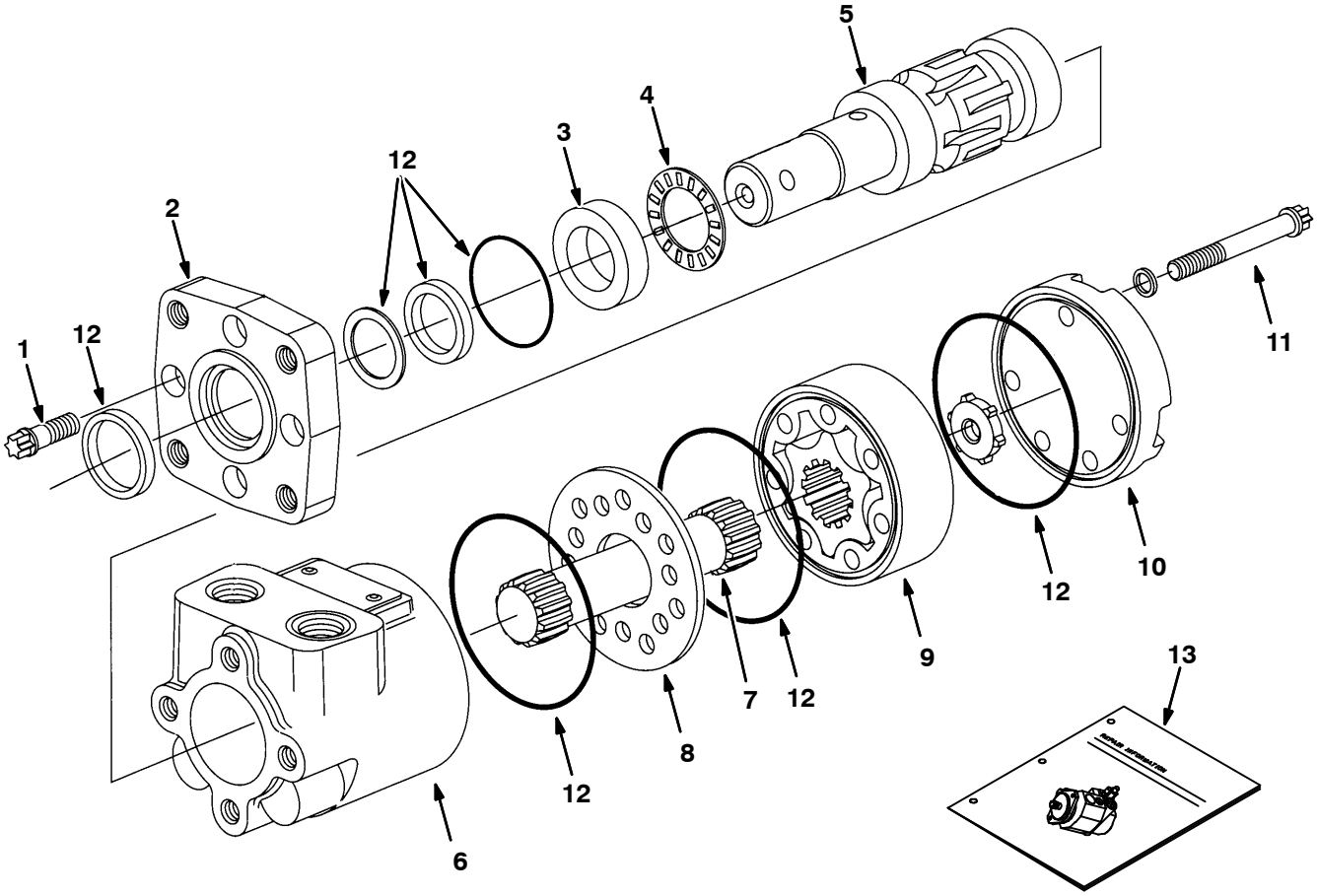

350288 – 09670 – E

Fig. 1 – Hydraulic Gear Motor Breakdown, 361026

	Ref.	Part No.	Serial Number	Description	Qty.
▽		361026	(000000–)	Motor, Hyd Gear In 08.9 B 1500	1
▲	1	37555	(000000–)	Screw	4
▲	2	31354	(000000–)	Flange Mounting	1
▲	3	16695	(000000–)	Race Thrust	1
▲	4	45628	(000000–)	Thrust Bearing	1
▲	5	31373	(000000–)	Shaft, Output	1
▲	6	74100	(000000–)	Housing	1
▲	7	21955	(000000–)	Drive	1
▲	8	74094	(000000–)	Spacer Plate	1
▲	9	21956	(000000–)	Gerotor Set	1
▲	10	65230	(000000–)	Cap, End	1
▲	11	21958	(000000–)	Cap Screw	5
▲	12	28835	(000000–)	Seal Kit, Motor A/H–Stnd	1
	13	74250	(000000–)	Instr. Repair Info, Motor	1

Fig. 2 – Hydraulic Control Valve Breakdown, 361012

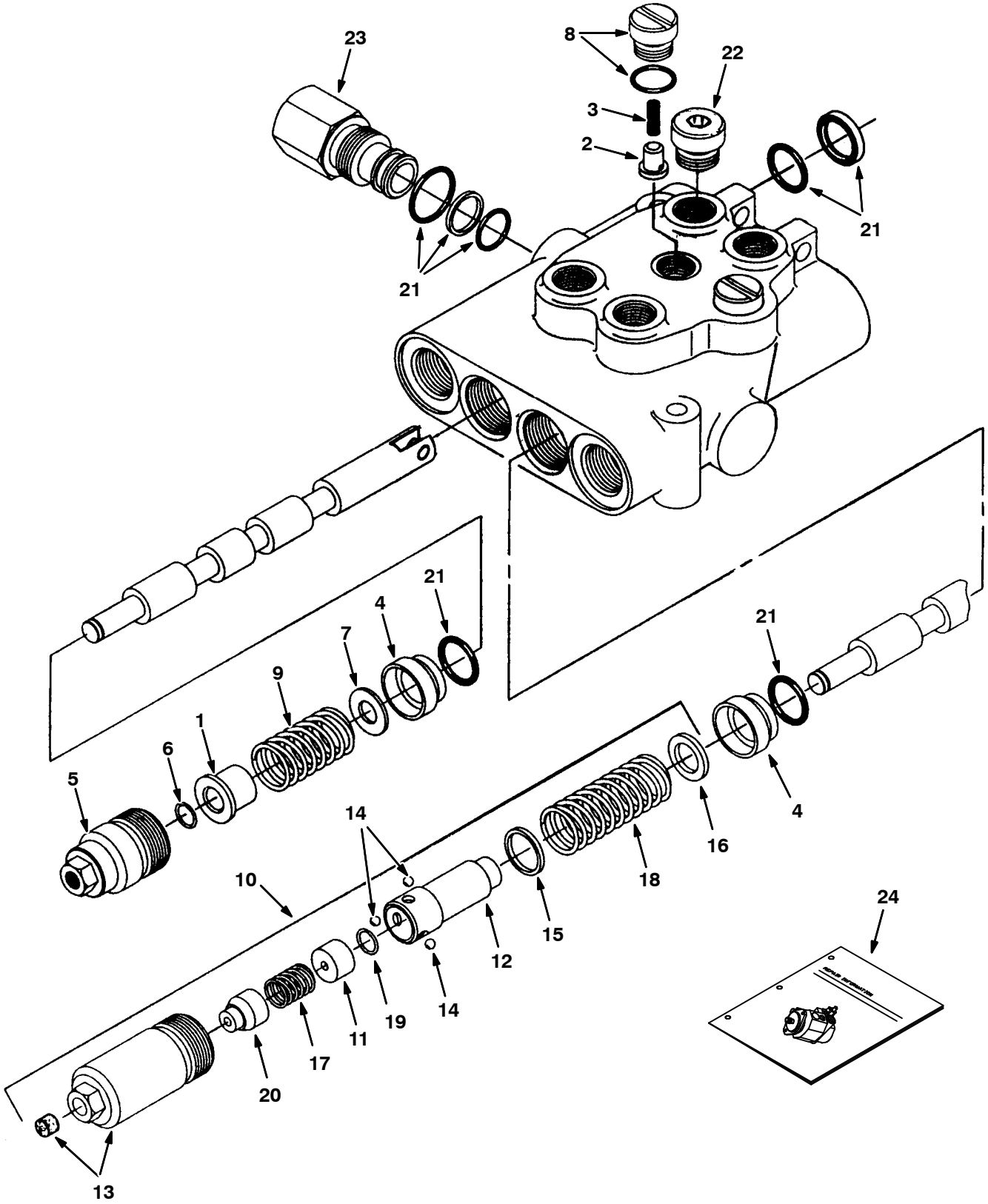

350284 – 09670 – ALL

Fig. 2 – Hydraulic Control Valve Breakdown, 361012

	Ref.	Part No.	Serial Number	Description	Qty.
▽		361012	(000000–)	Valve, Hyd Control Man	1
▲	1	79785	(000000–)	Spacer	1
▲	2	79786	(000000–)	Plunger	2
▲	3	79787	(000000–)	Spring	2
▲	4	79788	(000000–)	Bushing	2
▲	5	79789	(000000–)	Cap Assembly	1
▲	6	79792	(000000–)	Ring, Retaining	1
▲	7	79794	(000000–)	Washer	1
▲	8	79795	(000000–)	Plug & O–Ring	2
▲	9	79796	(000000–)	Spring	1
▲▽	10	79814	(000000–)	Kit, Detent In	1
▲▲	11	79801	(000000–)	Spacer	1
▲▲	12	79802	(000000–)	Detent Adaptr	1
▲▲	13	21961	(000000–)	Cap Assembly	1
▲▲	14	79804	(000000–)	Ball	3
▲▲	15	79805	(000000–)	Washer	1
▲▲	16	79806	(000000–)	Washer	1
▲▲	17	79807	(000000–)	Spring	1
▲▲	18	79808	(000000–)	Spring	1
▲▲	19	79792	(000000–)	Ring, Retaining	1
▲▲	20	79800	(000000–)	Cone	1
▲	21	79812	(000000–)	Seal Kit, Vlv	1
▲	22	13904	(000000–)	Plug Gage #6	2
	23	361028	(000000–)	Plug Assy,Byd	1
	24	79820	(000000–)	Instr. Valve Repair Info	1

Fig. 3 – Hydraulic Steering Valve Breakdown, 74173

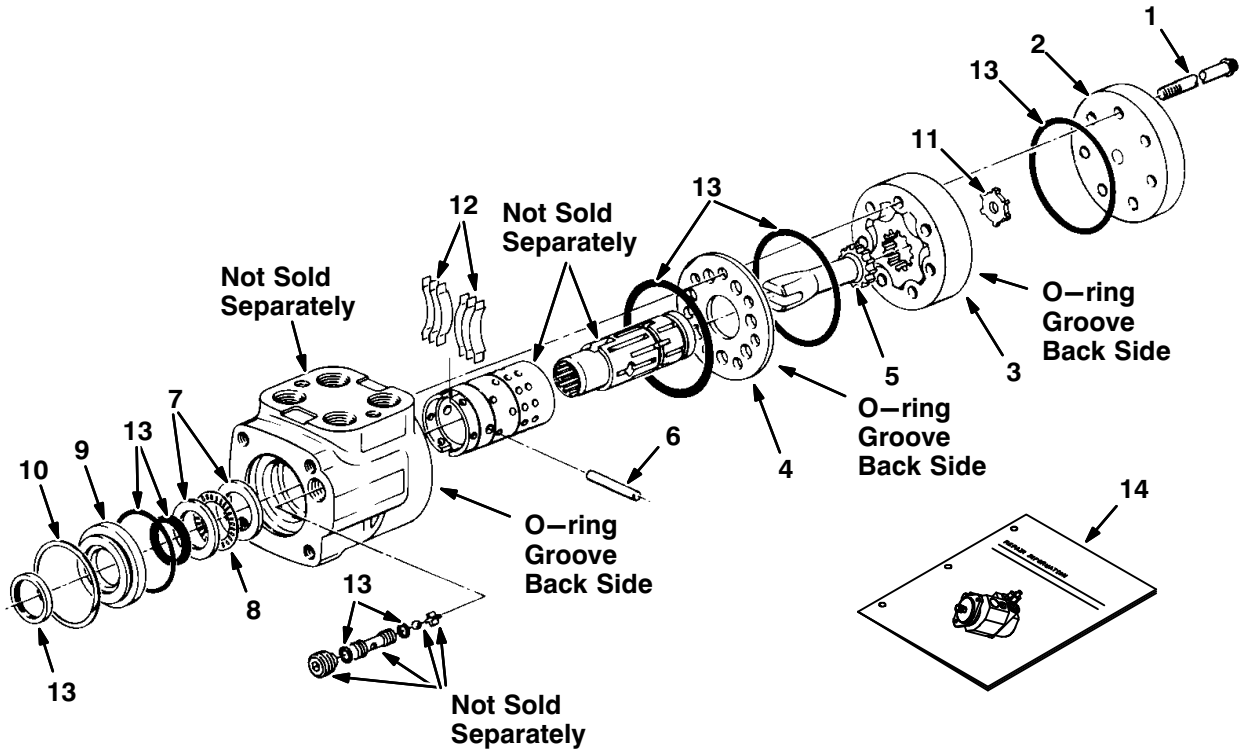

09670 – E

	Ref.	Part No.	Serial Number	Description	Qty.
▽		74173	(000000–)	Valve, Hydraulic Steering 07.3 0600	1
▲	1	74191	(000000–)	Cap, Screw	7
▲	2	74181	(000000–)	Cap, End	1
▲	3	71574	(000000–)	Gerotor Set	1
▲	4	74182	(000000–)	Plate, Wear	1
▲	5	58596	(000000–)	Drive	1
▲	6	74218	(000000–)	Pin	1
▲	7	74109	(000000–)	Race, Bearing	2
▲	8	74110	(000000–)	Bearing, Needle	1
▲	9	74112	(000000–)	Retainer, Front	1
▲	10	74111	(000000–)	Ring, Retaining	1
▲	11	74140	(000000–)	Spacer	1
▲	12	74195	(000000–)	Spring Kit	1
▲	13	74190	(000000–)	Seal Kit	1
	14	74251	(000000–)	Repair Info	1

Fig. 4 – Electric Motor Breakdown, 360065

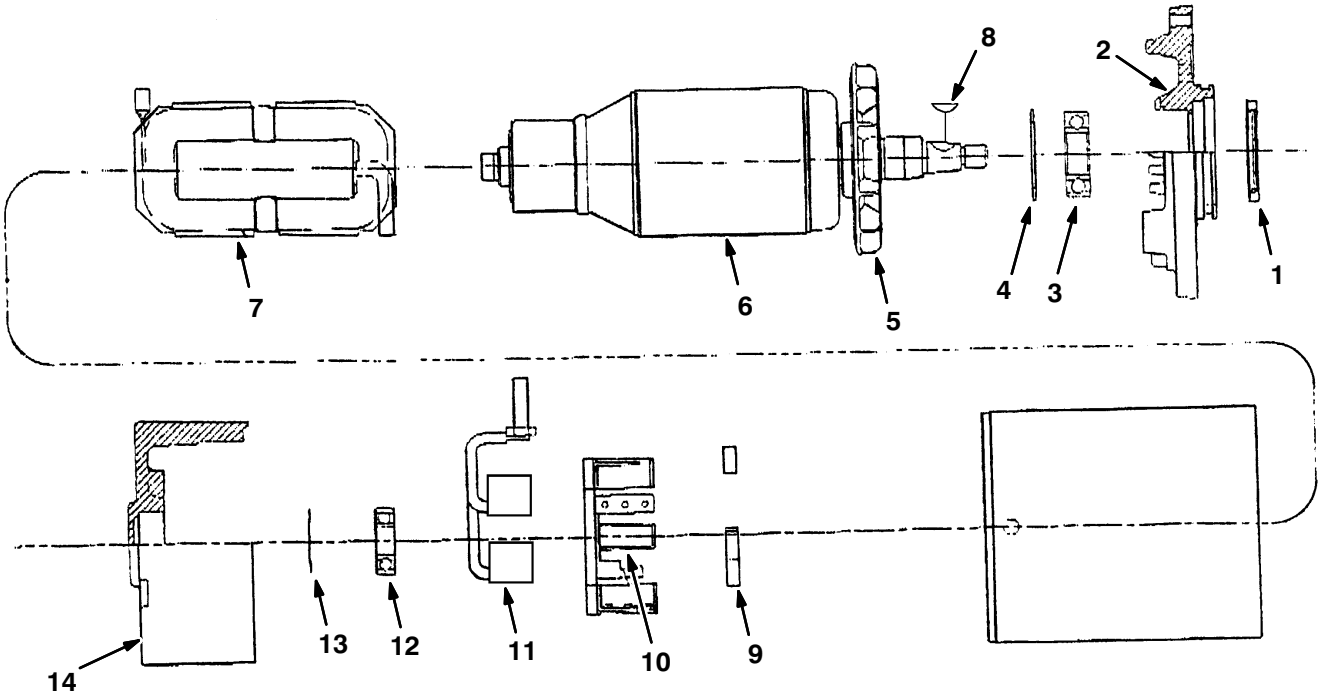

350403 – E

	Ref.	Part No.	Serial Number	Description	Qty.
▽		360065	(000000–)	Motor, Electric, 36VDC 2.1 HP	1
▲	1	361952	(000000–)	Seal	1
▲	2	361953	(000000–)	Drive Endhead	1
▲	3	48758	(000000–)	Bearing	1
▲	4	361954	(000000–)	Snap–Ring	1
▲	5	361955	(000000–)	Fan	1
▲	6	361956	(000000–)	Armature and Fan Assembly	1
▲	7	361957	(000000–)	Field Coil Kit	1
▲	8	00500–7	(000000–)	Key–Wdruff 0.16 0.662 Asa#0505	1
▲	9	361959	(000000–)	Brush Spring	4
▲	10	361960	(000000–)	Brush Box and Plate Assembly	1
▲	11	361961	(000000–)	Brush, Motor, W/Wire [Av]	1
▲	12	361962	(000000–)	Bearing	1
▲	13	361963	(000000–)	Wavy Washer	1
▲	14	361964	(000000–)	Commutator Endhead	1

Fig. 5 – Electric Motor Breakdown, 360175

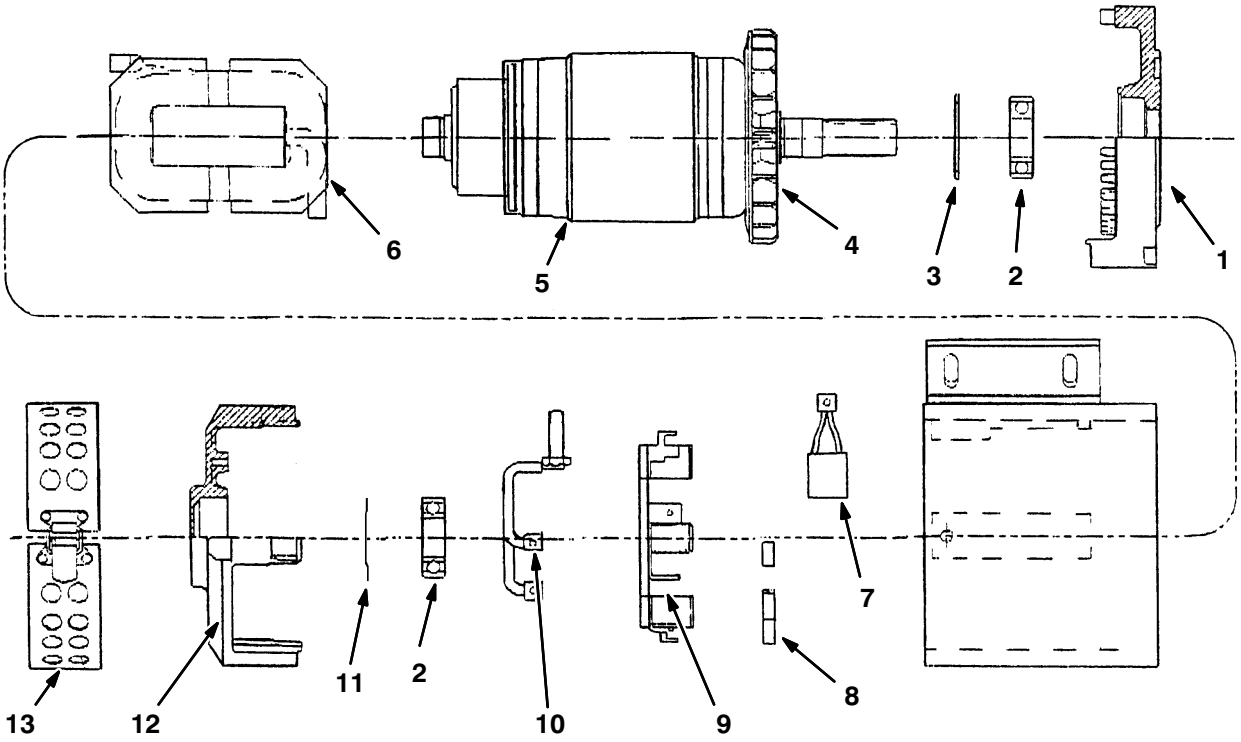

350405 – E

	Ref.	Part No.	Serial Number	Description	Qty.
▽		360175	(000000–)	Motor, Electric, 36VDC 4.0 HP	1
▲	1	361965	(000000–)	Drive Endhead	1
▲	2	48758	(000000–)	Bearing	1
▲	3	361954	(000000–)	Snap–Ring	1
▲	4	361966	(000000–)	Armature Fan	1
▲	5	361967	(000000–)	Armature and Fan Assembly	1
▲	6	361968	(000000–)	Field Coil Kit	1
▲	7	385742	(000000–)	Brush, Motor, Ele [Av#a91–112e]	4
▲	8	48755	(000000–)	Brush Spring	4
▲	9	361969	(000000–)	Brush Box and Plate Assembly	1
▲	10	361970	(000000–)	Lead Assembly Kit	1
▲	11	361971	(000000–)	Wavy Washer	1
▲	12	361972	(000000–)	Commutator Endhead	1
▲	13	361973	(000000–)	Headband	1

Fig. 6 – Hydraulic Solenoid Valve Breakdown, 1046688

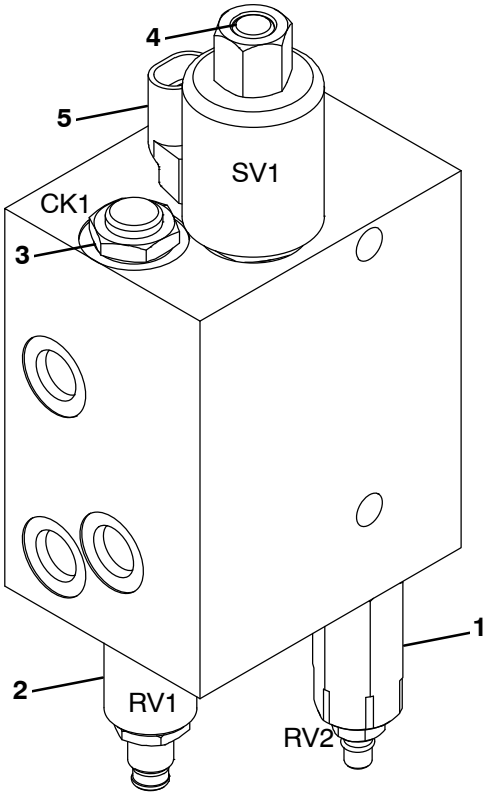

356086 – E

	Ref.	Part No.	Serial Number	Description	Qty.
▽		1046688	(000000–)	Valve, Hyd, Solenoid, 36vdc	1
▲▽	1	373740	(000000–)	Valve, Relief	1
▲▲		373745	(000000–)	Seal Kit, Valve, Hyd	1
▲▽	2	373738	(000000–)	Valve, Cntrl, Logic	1
▲▲		373582	(000000–)	Seal Kit, Hsng	1
▲▽	3	373741	(000000–)	Valve, Check	1
▲▲		373745	(000000–)	Seal Kit, Valve, Hyd	1
▲▽	4	373739	(000000–)	Valve, Stem, Hyd	1
▲▲		373584	(000000–)	Nut, Short	1
▲▲		373582	(000000–)	Seal Kit, Hsng	1
▲	5	373744	(000000–)	Solenoid, #10, 36vdc	1

Fig. 7 – Hydraulic Solenoid Valve Breakdown, 1045994

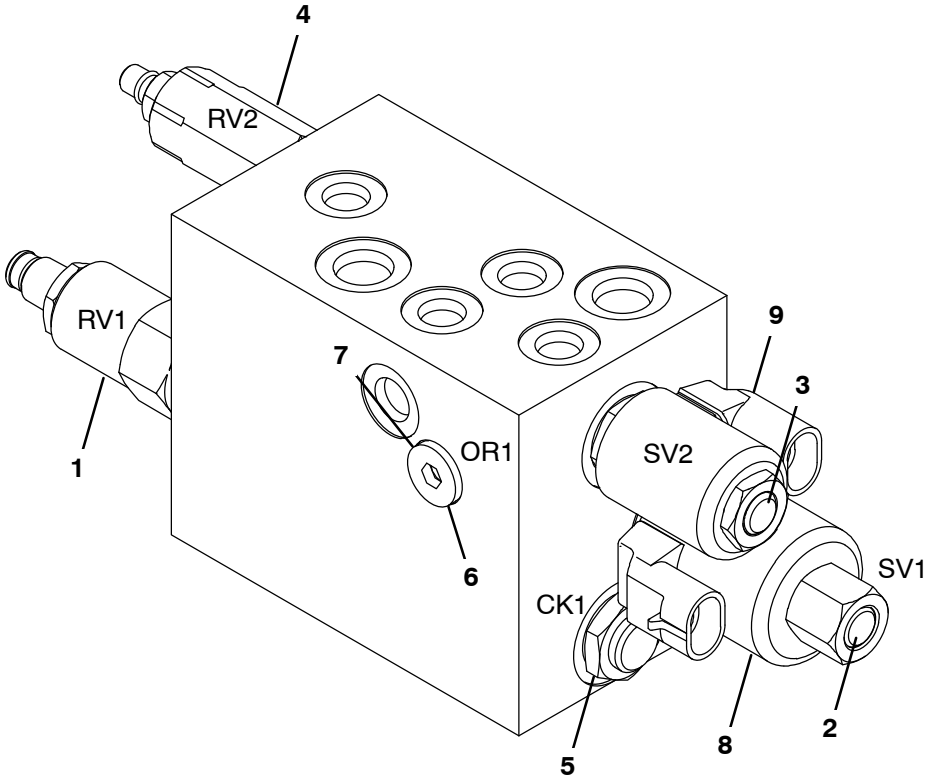

356088 – E

	Ref.	Part No.	Serial Number	Description	Qty.
▽		1045994	(000000–)	Valve, Hyd, Solenoid, 36vdc	1
▲▽	1	373738	(000000–)	Valve, Cntrl, Logic	1
▲▲		373582	(000000–)	Seal Kit, Hsng	1
▲▽	2	373739	(000000–)	Valve, Stem, Hyd	1
▲▲		373584	(000000–)	Nut, Short	1
▲▲		373582	(000000–)	Seal Kit, Hsng	1
▲▽	3	373734	(000000–)	Solenoid, Cntrl	1
▲▲		373584	(000000–)	Nut, Short	1
▲▲		1058233	(000000–)	Seal Kit, Cartridge	1
▲▽	4	373740	(000000–)	Valve, Relief	1
▲▲		373745	(000000–)	Seal Kit, Valve, Hyd	1
▲▽	5	373741	(000000–)	Valve, Check	1
▲▲		373745	(000000–)	Seal Kit, Valve, Hyd	1
▲▽	6	13904	(000000–)	Fitting, Plug, Org, #6, Valve [Cec]	1
▲▲		77005	(000000–)	Seal, Org, .078 X 00.47id 06	1
▲	7	373742	(000000–)	Plug, Orifice, Valve, Hyd, .035	1
▲	8	373743	(000000–)	Solenoid, #8, 36vdc	1
▲	9	373744	(000000–)	Solenoid, #10, 36vdc	1

Fig. 8 – Hydraulic Solenoid Valve Breakdown, 1237088

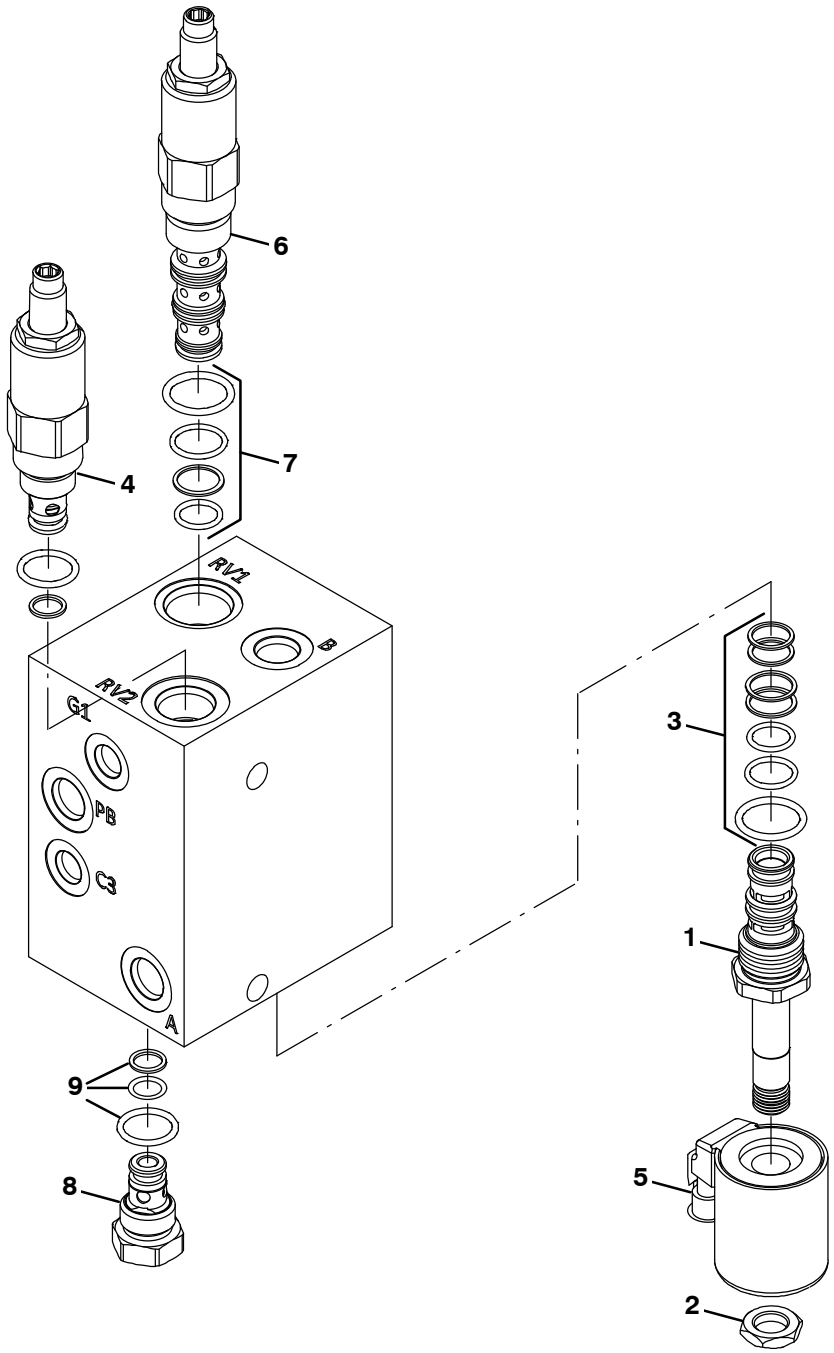

356933 – E

	Ref.	Part No.	Serial Number	Description	Qty.
▽		1237088	(000000–)	Valve, Hyd, Solenoid, 36vdc [1046688]	1
▲▽	1	373663	(000000–)	Valve, Stem, No	1
▲▲	2	373670	(000000–)	Nut, Solenoid	1
▲▲	3	373646	(000000–)	Seal Kit, Cartridge	1
▲	4	9017984	(000000–)	Relief Valve [Rv08–22a–0–N–35/24]	1
▲▽	5	373642	(000000–)	Solenoid, 12vdc, Hyd [Sz10]	1
▲▲	6	373738	(000000–)	Valve, Cntrl, Logic	1
▲▲	7	373582	(000000–)	Seal Kit, Hsng	1
▲▽	8	373741	(000000–)	Valve, Check	1
▲▲	9	373745	(000000–)	Seal Kit, Valve, Hyd	1

Fig. 9 – Hydraulic Solenoid Valve Breakdown, 1237086

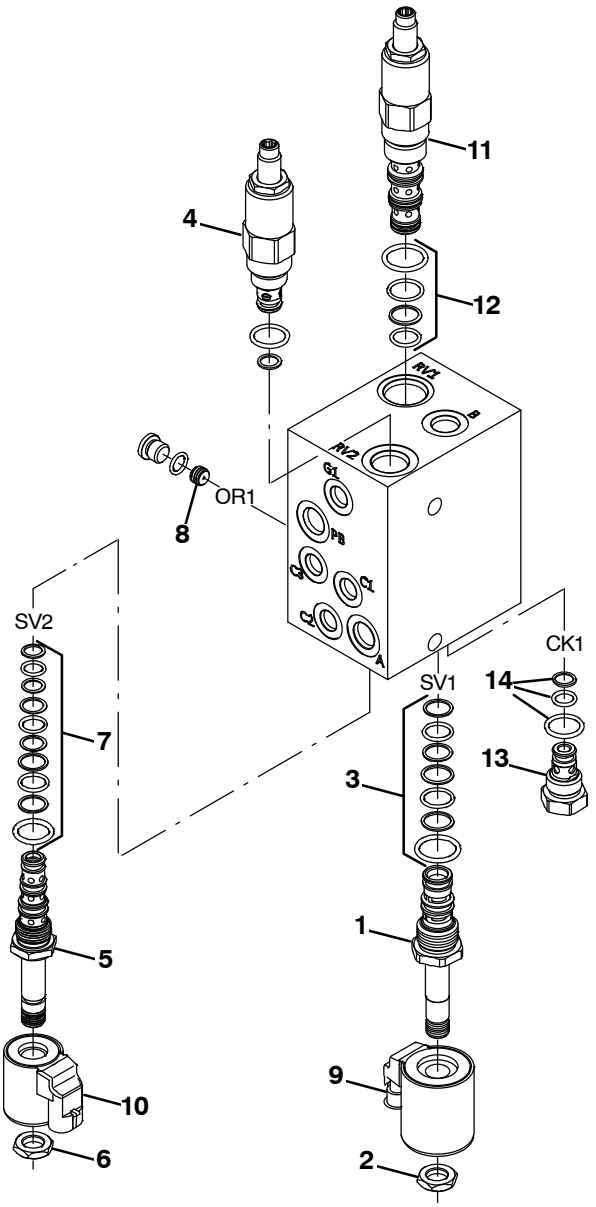

356931 – E

	Ref.	Part No.	Serial Number	Description	Qty.
▽		1237086	(000000–)	Valve, Hyd, Solenoid, 36vdc [1045994]	1
▲▽	1	373663	(000000–)	Valve, Stem, No	1
▲▲	2	373685	(000000–)	Nut, Coil, Nyl Patch	1
▲▲	3	373646	(000000–)	Seal Kit, Cartridge	1
▲	4	9017984	(000000–)	Relief Valve [Rv08–22a–0–N–35/24]	1
▲▽	5	373657	(000000–)	Valve, Stem, Hyd	1
▲▲	6	373684	(000000–)	Nut, Coil, Nyl Patch	1
▲▲	7	373647	(000000–)	Seal Kit, Cartridge	1
▲	8	9017985	(000000–)	Plug Orifice [6112046] Duplicate	1
▲	9	373642	(000000–)	Solenoid, 12vdc, Hyd [Sz10]	1
▲	10	373640	(000000–)	Solenoid, 12vdc, Hyd [Sz08]	1
▲▽	11	373740	(000000–)	Valve, Relief	1
▲▲	12	373745	(000000–)	Seal Kit, Valve, Hyd	1
▲▽	13	373741	(000000–)	Valve, Check	1
▲▲	14	373745	(000000–)	Seal Kit, Valve, Hyd	1

SECTION 5

CONTENTS **PAGE**

PART NUMBER TO PAGE NUMBER CROSS REFERENCE LIST 5-2
PART DESCRIPTION TO PAGE NUMBER CROSS REFERENCE LIST 5-10

PART NUMBER TO PAGE NUMBER CROSS REFERENCE LIST

Part Number	Page Number
00500-10	2-47
00500-7	4-7
00915	2-39
00928	2-37
00954	2-47
01682	2-39
01685	2-43, 2-61, 3-25
01689	2-5
01713	2-45
01714	2-35
01726	3-41
01754	2-19
02076	2-29, 2-31, 2-39
02356	2-39
02431	2-5
02469	2-65, 3-29
02850	2-57, 2-61, 3-15
02863	3-40
03670	1-1, 2-39
04186	2-37
04375	2-55
04706	2-21
06415	2-51
06419	2-37
06474A	2-23
06549	2-19, 2-25, 2-57, 3-3, 3-5, 3-7, 3-9, 3-17, 3-45
06750	2-39
06927	2-57, 3-15
06930	3-49
06933	3-3, 3-5, 3-7, 3-9
06935	3-17, 3-45
06941	3-23
06942	3-17
06943	2-23, 2-45, 2-47, 3-11, 3-13, 3-61
06946	3-43, 3-46, 3-47
06949	2-25, 2-68, 3-3, 3-5, 3-7, 3-9
06955	2-11, 2-13, 2-35, 3-23
06956	2-33
06957	2-41, 2-49
06958	2-29
06961	2-59, 2-69, 3-20, 3-27
06963	2-23
06968	2-25, 3-68
06969	2-5
06977	2-37
06988	2-43, 3-25
07259	2-27, 2-49
07471	3-53, 3-55
07514	2-45, 2-61
07785	2-43, 3-23, 3-25
07787	2-37
07791	2-5, 2-11, 2-13, 2-19, 2-23, 2-45, 2-49, 2-53, 2-57, 2-67, 2-71, 3-3, 3-5, 3-7, 3-9, 3-11, 3-13
07792	2-49, 2-71
07793	2-5, 3-11, 3-13
07887	3-39
08013N	2-3
08085	2-11, 2-13, 2-35, 2-39, 2-43, 3-23, 3-25
08170	2-25
08175	2-27, 2-37, 2-47, 3-23
08179	2-45
08182	2-23, 2-25, 2-57
08298	2-49
08346	2-45
08361	2-49
08708	2-15, 2-19, 2-21, 2-23, 2-25, 2-45, 2-47, 2-51, 2-53, 2-57, 2-68, 3-3, 3-5, 3-7, 3-9, 3-11, 3-13, 3-17, 3-23, 3-39, 3-43, 3-45, 3-46, 3-47, 3-51, 3-61
08709	2-5, 2-11, 2-13, 2-25, 2-33, 2-37, 2-41, 2-49, 2-51, 2-55, 2-57, 2-59, 2-67, 3-3, 3-5, 3-7, 3-9, 3-17, 3-19, 3-23, 3-31, 3-33, 3-35, 3-37, 3-65
08711	2-25, 2-37, 2-49
08713	2-29, 2-31, 2-43, 3-25
08716	3-39
08793	2-57
09010	2-43, 3-25
09026	2-57
09028	2-43, 2-49
09037	2-27
09087	2-45
09088	2-35
09200	2-19, 2-51, 2-53, 3-3, 3-5, 3-7, 3-9
09244	2-57
09291	2-35
09740	2-5, 2-36, 3-31, 3-35
1002898	3-49
1006415	3-49
1008142	2-19
1011170	3-49
1012529	2-5
1014563	2-51, 2-57
1014976	3-49, 3-53, 3-55
1014981	3-55
1015455	3-53, 3-55
10157	3-43
1017255	3-55
1019285	3-49
1020341	2-7, 2-25, 2-49, 2-71, 3-7, 3-9, 3-65
1023920	3-17
1025992	3-29
1026362	2-49
1027321	2-65
1031617	3-15
1031699	3-49
1035826	2-41, 2-43, 3-23, 3-25
10362	2-47
1036631	2-27
1036892	2-17, 2-21, 2-37, 2-45, 2-53, 2-57
1037345	3-49
1037346	2-5, 2-9, 2-11, 2-13, 2-15, 2-17, 2-19, 2-23, 2-53, 2-57, 2-59, 2-61, 2-71, 3-3, 3-5, 3-7, 3-9, 3-15, 3-23, 3-31, 3-33, 3-35, 3-37, 3-49, 3-53, 3-55, 3-63
1037354	2-5, 2-19, 2-33, 2-35, 2-39, 2-45, 2-51, 2-57, 2-67, 3-11, 3-13, 3-33, 3-37, 3-65
1037355	2-25, 2-49, 2-51, 2-59, 3-17, 3-31
1037358	2-39, 2-47, 2-51, 2-55, 2-71, 3-21, 3-25, 3-49
1037427	2-43
1037485	2-43
1038176	2-57
1038957	2-19
1039250	2-59
1039735	2-25
1040467	2-19, 3-31, 3-35
1041873	2-19, 2-71
1041941	3-29
1042282	2-59
1042285	2-59
1042727	3-25
1042730	3-25
1042791	2-5
1042849	2-5
1042875	2-51
1043176	3-21
1043383	2-59
1043490	2-51

Part Number	Page Number
1043815	2-59
1043818	2-61
1043819	2-61
1043938	2-53
1044075	3-13
1044146	2-61
1044214	2-53
1044254	2-51
1044273	2-57
1044285	2-59
1044351	2-59
1044352	2-61
1044356	1-1, 2-61, 3-63
1044357	1-1, 2-45
1044844	2-7
1044845	2-9
1044900	2-51
1044907	2-51
1045211	2-19
1045222	2-21
1045229	2-11
1045365	2-51
1045404	3-17
1045423	2-53
1045434	2-53
1045475	3-23
1045563	3-23
1045567	3-15
1045569	3-15
1045571	3-23
1045627	2-45
1045633	3-49
1045647	3-23
1045900	1-1, 2-61
1045994	3-27, 4-10
1046038	3-23
1046246	2-43
1046248	3-25
1046406	3-11, 3-13
1046410	3-61
1046498	3-23
1046553	2-25
1046590	2-45
1046688	2-69, 4-9
1047115	3-21
1047116	3-21
1047280	2-57
1047447	2-11
1047456	3-15
1047480	3-11, 3-13
1047575	1-1, 2-51
1047592	3-15
1047632	3-39
1047635	3-39
1047637	1-1, 2-47
1047653	3-15
1047690	3-15
1047696	3-31, 3-35
1047704	3-11, 3-13
1047705	3-11, 3-13
1047706	3-15
1047717	2-82
1047728	3-17
1047773	3-31, 3-33, 3-35, 3-37
1047878	2-41
1048096	2-51
1048116	2-51
1048142	2-25
1048161	3-17
1048166	3-17
1048198	2-11
1048311	2-43, 3-25
1048335	2-61, 3-63
1048351	2-21
1048353	2-61, 3-63
1048408	3-21
1048456	2-19
1048488	2-51
1048504	2-82
1048508	2-23
1048529	2-82
1048556	3-23
1048565	2-45
1048718	3-35
1048720	3-31, 3-35
1048732	2-51
1048744	2-36
1048746	2-7, 2-9
1048750	2-7, 2-9
1048785	3-35
1048800	2-36
1048801	2-33
1048849	3-15
1048883	3-31
1048955	2-11, 2-13
1048990	2-51
1049015	2-51
1049102	2-51
1049208	2-9
1049220	2-35
1049224	2-35
1049253	2-51
1049259	3-49
1049263	2-51
1049293	2-37
1049302	2-39
1049336	2-39
1049408	2-59
1049409	2-59
1049553	3-3, 3-5
1049554	3-3, 3-5, 3-65
1049687	3-17
1049702	3-15
1049860	2-61
1049937	3-13
1049938	3-13
1049972	3-47
1049973	3-46
1049982	2-59
1049987	2-11, 2-13
1049988	2-11, 2-13
1049990	3-11, 3-13
1049991	3-11, 3-13
1049992	3-11, 3-13
1050046	3-7, 3-9
1050070	3-26
1050077	3-46, 3-47
1050106	2-59, 2-61
1050158	2-71
1050162	3-15
1050170	2-83
1050242	2-57
1050243	2-57
1050255	3-15
1050266	3-15
1050665	3-43
1050727	2-83
1050785	2-11, 2-13
1050955	2-23
1050957	2-23
1051045	2-57
1051049	2-57
1051115	2-57
1051135	2-19
1051199	2-59
1051250	2-5
1051766	2-57
1051773	2-57
1051800	2-57
1051866	2-67
1051892	2-67
1052026	3-49
1052113	2-25
1052114	2-25
1052203	2-49
1052231	2-49
1052263	2-25
1052446	2-57
1052452	2-51
1052454	2-51
1052474	3-3, 3-5
1052475	3-7, 3-9
1052531	2-23
1052533	3-29
1052534	3-29
1052540	2-23
1052541	2-23
1052560	2-27
1052561	2-27
1052562	2-29
1052563	2-29
1052620	3-39
1052625	2-73
1052644	2-47
1052646	2-47
1052647	2-47
1052649	2-47
1052650	2-47
1052651	2-47

Part Number	Page Number
1052652	2-45
1052653	2-45
1052763	2-47
1052803	2-15
1052804	2-15
1052805	2-15
1052806	3-40
1052808	3-17
1052817	2-15
1052919	2-59
1053068	3-17
1053233	3-11, 3-13
1053291	2-61
1053318	2-51
1053321	2-61
1053385	3-15
1053393	2-47
1053395	2-71
1053746	2-49
1053842	2-19
1054045	2-36
1054256	2-43, 3-25
1054266	3-43
1054267	3-43
1054368	3-15
1054369	3-31, 3-33, 3-35, 3-37
1054371	3-31, 3-35
1054374	3-35
1054391	3-31, 3-35
1054566	2-5
1054567	3-31, 3-35
1054588	2-39
1054619	2-5
1054625	3-31
1054872	2-19
1054875	2-25
1055049	2-33
1055074	2-33
1055376	2-65
1055583	2-57
1055605	2-5
1055606	3-15
1055674	2-37
1055757	3-11, 3-13
1056045	2-11, 2-13
1056298	2-61
1056539	3-19
1056543	3-19
1056624	2-82
1057040	2-19
1057585	3-11
10576	2-11, 2-13
1057602	1-1, 2-5
1057684	2-5
1057707	1-1
1057734	2-45
1057735	2-45
1057959	2-61
1057977	2-83
1058233	4-10
1058333	2-83
1058717	2-11, 2-13
1058722	2-11, 2-13
1058784	2-21
1058996	2-21
1059119	2-55
1059158	2-55
1059569	1-1, 2-37
1060278	2-55
1060331	2-45
1060334	2-45
1060444	2-45
1060541	2-11
1061216	2-5
1061575	2-61
1061582	2-82
10632	3-65
10632-1	3-7, 3-9, 3-65
10632-13	3-53, 3-55
10632-15	2-71
10632-18	2-51
10632-4	2-57
1063246	2-29
1063248	2-29
1064184	2-19, 3-3, 3-5, 3-7, 3-9, 3-15, 3-65
1064185	3-3, 3-5, 3-7, 3-9
1064188	2-19, 3-57
1064189	2-19
1064191	3-3, 3-5, 3-7, 3-9, 3-65
1064550	3-15
1064551	3-15
1064956	2-11, 2-13
1065829	2-17
1066138	2-17
1066146	2-17
10664	2-67
1067059	2-49
1068098	2-17
1068101	2-11, 2-13
1068102	2-11, 2-13
1068103	2-11, 2-13
1068104	2-11, 2-13
1068105	2-11, 2-13
1068803	2-43, 3-25
1068904	2-19
1069315	3-57
1070324	3-45
1070384	3-45
1071255	2-39
1071293	3-45
1071294	3-45
1071296	3-45
1071718	2-65
1071734	2-65
1071757	2-65
1071758	2-65
1071760	2-65
1071761	2-65
1071763	2-65
1071765	2-65
1071766	2-65
1071767	2-65
1071768	2-65
1071769	2-65
1071770	2-65
1071771	2-65
1071772	2-65
1071773	2-65
1071774	2-65, 3-29
1071776	2-65, 3-29
1071940	3-29
1071941	3-29
1071942	3-29
1071943	3-29
1071945	2-39
1071990	2-51
1072011	3-3, 3-5, 3-7, 3-9
1072195	2-21
1072210	2-13
1072792	2-31
1073048	2-13
1073173	2-31
1073607	2-5
1073612	2-31
1074091	2-31
1074197	2-39
1074369	2-31
1074671	2-67
1075003	2-19
1075168	2-21
1075205	2-5
1075328	2-61
1075598	2-9
1076004	3-63
1076207	3-33, 3-37
1076210	3-33, 3-37
1076211	3-33, 3-37
1076213	3-33, 3-37
1076215	3-33
1076216	3-33, 3-37
1076218	3-33, 3-37
1076240	2-25
1076249	3-63
1076253	3-63
1076258	3-37
1076264	3-37
1076292	3-33, 3-37
1076300	2-33
1076302	2-9
1076304	2-51
1076311	2-61
1076354	3-61
1076355	3-61
1076356	3-61
1076382	3-61
1076384	3-61
1076437	3-49

Part Number	Page Number
1076438	3-49
1076641	3-41
1076741	3-68
1076772	3-65, 3-66
1076786	3-65
1076795	3-68
1077067	2-13
1077071	2-13
1077073	2-13
11211	2-57
11329	2-11, 2-13
11398	2-37
11631	2-37
11843	2-47
1201894	2-13
1203454	3-49
1203814	3-49
1204338	3-49
1207936	3-41
12138	2-49
12263	2-23
12273	2-37
1227937	3-41
1227938	3-41
12317	2-51
1232030	3-49
1232065	3-53, 3-55
1232066	3-53, 3-55
1232379	3-49
1232471	3-49
1232473	3-53, 3-55
1232484	3-57
1233457	3-51
1233799	3-57
1233938	3-57
1234106	3-59
1236153	2-61
12364	2-41
1237086	3-27, 4-12
1237088	2-69, 4-11
1238242	3-57
1240481	3-57
1240687	3-65
1241776	3-49
12459	2-49, 2-57, 3-31, 3-35
1246677	3-63
1246678	3-63
1247287	2-25
1247568	3-45
1251735	3-68
1252057	3-65
12540	2-29
1254294	3-3, 3-5, 3-7, 3-9
1254686	2-3
1256657	3-65, 3-66
13534	2-37
13766	2-37
13904	4-5, 4-10
140147	2-45
140916	3-45
14368	2-23
14397	2-23
14455	2-31
14595-1	2-25, 2-35
14605	2-25, 2-35, 2-43, 3-23, 3-25
15008	2-71
150538	3-49
15331	2-43, 3-25
15675	2-15, 2-17, 2-57, 2-61
15803	3-29
15846	2-73
16082	2-43, 3-25
16376	2-67
16411	1-1
16412	1-1
16455	2-49
16695	4-3
16735	2-11, 2-53, 2-59, 2-61
16931	2-71
16949	2-15
17186	2-23
17284	2-11, 2-13, 2-49
17404	2-49
19065	2-45
19066	2-19, 2-25, 2-51, 2-59, 3-3, 3-5, 3-7, 3-9, 3-11, 3-13, 3-49
19315	2-71
20170	2-45
20802	2-9
20944	3-49
20950	3-49
20951	3-49
20952	3-49
21168	2-5, 2-49, 2-51
21195	2-21
21955	4-3
21956	4-3
21958	4-3
21961	4-5
222111	3-57
222290	2-19, 3-3, 3-5, 3-7, 3-9, 3-23, 3-57
222460	2-35, 2-41, 3-23
222516	2-11, 2-13, 3-45
22290	2-21
223198	2-11, 2-13
223356	2-73
22615	2-43, 3-25
22892	3-41
23498	2-47
23683	2-47
23788	2-49
24265	2-61
24358	3-49
24899	2-36
25005	2-45
25014	2-23
25046	3-17
25312	3-40
25850	3-57
25887	2-36
27108	2-43, 3-25
27985	2-15
27988	2-37
27990	2-39
28835	4-3
29499	2-43, 3-25
29558	3-23
29584	2-41
30013	2-5, 2-9, 2-49, 2-51, 2-59, 3-17, 3-31, 3-33, 3-35, 3-37
30251	2-37
30252	2-36
30253	2-37
30255	2-37
30406	2-59, 2-61
30533	3-19, 3-20
312584	3-15
31354	4-3
31373	4-3
314012	3-15, 3-17
31597	2-65, 3-29
31603	2-65
31646	2-43, 3-25
317232	3-51
317260	3-49
32483	2-23, 2-45, 2-71, 3-3, 3-5, 3-7, 3-9, 3-23, 3-45, 3-51, 3-61
32485	2-23, 2-37, 2-39, 2-67, 3-17
32486	2-15, 2-23, 2-25, 2-43, 2-57, 3-3, 3-5, 3-7, 3-9, 3-11, 3-13, 3-25, 3-68
32490	2-11, 2-13, 2-23, 2-45, 2-51, 2-57, 2-67, 2-71, 3-19, 3-23, 3-31, 3-35, 3-39
32491	2-5, 2-11, 2-13, 2-15, 2-17, 2-25, 2-33, 2-35, 2-37, 2-41, 2-51, 2-53, 2-55, 2-57, 2-59, 2-61, 2-68, 3-3, 3-5, 3-7, 3-9, 3-11, 3-13, 3-23, 3-49, 3-65
32492	2-35, 2-39, 2-41, 2-43, 2-47, 2-49, 2-51, 2-57, 2-59, 2-69, 3-25, 3-27, 3-43

Part Number	Page Number
32515	2-45
32523	2-15
32525	2-47
32598	2-49
32747	3-23
32899	2-25
32960	2-7
32980	2-5, 3-45
32982	2-71
32983	2-15
32984	2-29, 2-31, 2-45, 2-71, 3-11, 3-13
32987	2-27, 2-37
32988	3-45
33342	2-43, 3-25
33372	2-47
33671	3-51
33807	2-19
33932	3-49, 3-63
34195	2-67
34359	3-27
34877	2-49
35529	2-49
35886	2-27
35973	2-36
360023	2-25
360062	2-68
360063	2-68
360064	2-49
360065	2-29, 4-7
360074	2-25
360077	2-49, 3-23
360081	2-43, 3-25
360104	2-37
360108	2-37
360109	2-37
360110	2-37
360113	2-37
360115	2-37
360116	2-37
360134	1-1, 2-5
360136	1-1, 2-5
360137	2-5
360138	2-5
360175	2-39, 4-8
360179	2-39
360180	2-39
360270	2-25
360271	2-25
360272	2-25
360273	2-25
360274	2-25
360275	2-25
360276	2-25
360283	2-7, 2-9
360319	2-7
360320	1-1, 2-37
360327	2-51
360336	1-1, 2-57
360347	2-37
360357	2-43, 3-25
360386	2-49
360388	2-7, 2-9
360406	2-47
360410	2-41
360411	2-41
360413	2-35
360414	2-41, 3-23
360417	2-41
360424	2-57
360449	2-41
360451	2-41
360454	2-35
360455	2-49
360460	2-13, 2-33, 2-35
360467	2-68
360488	2-35
360491	2-35, 2-37
360492	2-37
360516	2-71
360602	2-51
360603	1-1, 2-57
360606	2-57
360627	1-1
360630	3-20
360680	2-29
360686	1-1, 2-39
360704	2-11, 2-13
360711	2-21
360753	2-47
360761	1-1, 2-9
360768	2-49
360774	2-33
360781	2-5, 2-9
360784	1-1, 2-7
360801	2-41, 2-43, 3-23, 3-25
360802	2-25
360821	2-35
360824	2-53
360844	1-1
360848	2-57
360867	2-21
360893	2-51
360894	2-51
360906	2-23
360917	2-47
360932	3-20
360943	2-59
360961	2-41
360973	2-11, 2-13, 2-61, 3-39, 3-40
360980	2-29
360981	2-45
360989	2-73
360991	2-67
361012	2-68, 4-5
361023	1-1, 2-67
361026	2-43, 3-25, 4-3
361028	2-68, 4-5
361031	2-65
361032	2-65
361038	2-65
361040	2-65
361045	2-65
361053	2-65
361074	2-19
361096	2-35
361097	2-35
361114	2-35
361165	2-15
361168	3-43
361169	3-43
361191	2-39
361198	2-67
361271	2-67
361295	2-49
361299	2-68
361306	2-7
361327	2-47
361339	2-51, 3-11, 3-13, 3-15
361342	2-11
361343	2-11
361344	2-11, 2-13
361345	2-11, 2-13
361346	3-15
361554	2-11, 2-13
361555	2-37
361936	2-47
361937	2-47
361951	2-11
361952	4-7
361953	4-7
361954	4-7, 4-8
361955	4-7
361956	4-7
361957	4-7
361959	4-7
361960	4-7
361961	2-31, 4-7
361962	4-7
361963	4-7
361964	4-7
361965	4-8
361966	4-8
361967	4-8
361968	4-8
361969	4-8
361970	4-8
361971	4-8
361972	4-8
361973	4-8
361993	2-47
361994	2-47
361995	2-47
36328	2-49
363502	2-7
364080	3-41
364864	2-25

Part Number	Page Number
364948	2-25
36555-1	3-43
36643	2-37
36801	2-23
369702	2-5
369781	2-41, 3-23
370010	2-3
370025	2-3
373423	2-31
373582	4-9, 4-10, 4-11
373584	4-9, 4-10
373640	4-12
373642	4-11, 4-12
373646	4-11, 4-12
373647	4-12
373657	4-12
373663	4-11, 4-12
373670	4-11
373684	4-12
373685	4-12
373730	2-39
373731	2-49
373734	4-10
373738	4-9, 4-10, 4-11
373739	4-9, 4-10
373740	4-9, 4-10, 4-12
373741	4-9, 4-10, 4-11, 4-12
373742	4-10
373743	4-10
373744	4-9, 4-10
373745	4-9, 4-10, 4-11, 4-12
375019	2-45
375020	2-33
37555	4-3
377537	1-1
377538	1-1
377540	1-1
379000	3-11, 3-13
379719	2-57
382320	3-45
382516	2-19
383165	2-19
384418	2-61, 3-63
384419	2-61
385685	3-49
385742	4-8
385947	2-3
386063	3-51
386346	2-19
386810	2-45, 3-3, 3-5, 3-7, 3-9
387282	2-65
387376	2-47
387387	2-47
39005	2-35
39239	2-19
39277	2-5, 2-71, 3-33, 3-37
39278	2-29
39283	2-39, 3-19, 3-43
39308	2-23
39322	2-61
39332	2-47
39346	2-41
39349	2-7, 2-9
39350	2-27, 2-37
39396	2-43, 3-25
39527	2-27, 2-37
395973	2-69
395974	2-69
39658	2-19
397249	3-23
39807	3-3, 3-5, 3-7, 3-9
398526	2-19
40607	2-57, 2-61
41140	2-59
41141	2-5
41143	3-65
41169	2-9
41178	2-57, 3-17
41186	3-17
41187	2-39
41305	2-43, 3-25
41342	3-19
41346	2-29, 2-31, 3-11, 3-13
41359	2-23, 2-41
41430	2-23, 2-37, 2-39, 2-41, 2-49, 2-51, 3-19, 3-20
41561	2-47
42120-1	2-49
42120-4	2-27
42215	2-21
42227	2-67
43454	2-15
43611	2-23
43844	3-49, 3-53, 3-55
44078	2-45
44906	2-23, 2-33, 2-41
44961	2-5, 3-46, 3-47
45391	3-3, 3-5, 3-7, 3-9
45628	4-3
46029	2-51
46481	2-67
46559	2-43, 3-25
47501	2-43, 3-25
47504	2-21
47522	2-27, 2-69
47585	2-21
47638	2-49
47655	2-67
47753	2-43, 3-25
47985	3-46, 3-47
48732	2-49
48755	4-8
48758	4-7, 4-8
49034	3-11, 3-13
49145	2-25
49263	2-19, 2-21, 2-27
49266	2-43, 2-51, 2-71, 3-25, 3-45
49681	2-23
49697	2-61, 3-63
49826	2-9, 2-51
49924	2-39
50470	3-3, 3-5, 3-7, 3-9
50480	3-43
50902	2-39, 2-47
51109	2-25
51225-1	2-57
51305	3-49
51529	2-33
51562	3-23
51564	2-37
51813	2-41
52402	2-39, 2-68
52508	2-37
54009	3-39
54390	2-25
54395	2-11
54396	3-11, 3-13
54400	2-41, 3-23
54995	2-33, 2-41
55034	3-7, 3-9, 3-15
55586	2-69
55685	2-68
55779	2-36
55808	2-29
55965	3-39
56185	2-21
56690	2-21
56692	2-67
56820	2-27, 2-49, 2-69
56821	2-43, 2-67, 3-25
56835	2-21
57248	3-53, 3-55
57496	2-39
57972	2-65
57974	2-65
58056	2-27
58366	2-19, 3-7, 3-9
58596	4-6
59431	2-3
59432	2-3
59542	2-49
59633	2-43, 3-25
59661	3-17
59870	2-68
59965	2-57
61456	3-49
61791	2-29
63416	2-68
64173	2-41
64379	2-57
64425	2-43, 3-25
64757	3-63
64886	2-27
65215	2-67
65221	1-1, 2-67

Part Number	Page Number
65230	4-3
67004	3-39
67366	2-49
67683	2-68
67767	2-5, 2-57, 2-59
68275	3-67
68567	3-61
69924	2-27
69925	2-27
69926	2-27
69928	2-27
69971	3-19
70006	2-67
70622	2-21
70709	2-21
70717	2-21
71026	2-17
71126	2-41, 3-23
71244	2-47
71367	2-25
71477	3-19
71529	2-73
71556	2-65
71557	2-65
71574	4-6
71579	2-5
72040	2-29
72084	2-23
72164	3-3, 3-5, 3-7, 3-9
72171	3-3, 3-5, 3-7, 3-9
72439	2-15
72968	2-5, 3-67
74094	4-3
74100	4-3
74109	4-6
74110	4-6
74111	4-6
74112	4-6
74140	4-6
74173	2-21, 4-6
74181	4-6
74182	4-6
74190	4-6
74191	4-6
74195	4-6
74218	4-6
74250	4-3
74251	4-6
74454	2-47
74455	2-39, 2-47, 2-57, 2-59, 2-71, 3-17
75128	2-11, 2-13
75428	3-15
75430	2-23
75939	2-45
75968	2-21
76062	2-71
762425	2-49
762426	2-68
762427	2-57, 3-23
762428	2-69
762432	2-27, 2-49, 2-69
762433	2-21
762434	2-67
762435	2-21, 2-69
762436	2-68
762438	2-39, 2-68
762439	2-31
762442	2-27, 2-69
762443	3-29
762448	2-67
762456	2-67
762457	2-67
762458	2-43, 3-25
762459	2-21
762462	2-67
762492	2-67
763045	3-11, 3-13, 3-15, 3-17, 3-53, 3-55
763114	3-65
763149	2-61
76316	2-67, 2-69
764139	3-63
76570	2-41, 3-23
767411	2-43, 2-67, 3-25
76762	2-65
76960	2-15
769778	3-53, 3-55
77005	4-10
77097	2-57, 3-23
78951	3-57
79246	2-57
79785	4-5
79786	4-5
79787	4-5
79788	4-5
79789	4-5
79792	4-5
79794	4-5
79795	4-5
79796	4-5
79800	4-5
79801	4-5
79802	4-5
79804	4-5
79805	4-5
79806	4-5
79807	4-5
79808	4-5
79812	4-5
79814	4-5
79820	4-5
79874	3-27
82819	2-65
82833	2-21, 2-27
84581	2-43, 3-25
86029	2-43, 3-25
86375	2-71
86377	3-3, 3-5, 3-7, 3-9
86379	2-71
86398	2-73
86417	2-71
86444	2-9
86618	2-61
86636	3-49
86659	2-25
86798	2-23
86866	2-5
87099	2-3
87104	2-57
87172	3-21
87180	2-5
87181	1-1, 2-5
87216	2-49
87244	2-49
87299	2-47
87308	2-15, 2-25
87318	2-71
87333	2-3
87334	2-3
87349	2-19
87355	2-29
87482	2-71
87483	2-71
87495	2-73
87496	2-73
87507	2-71
87536	2-19
87546	2-61
87558	2-73
87581	2-15
87631	2-37
87689	1-1, 2-57
87707	2-45
87725	2-23
87749	2-29
87750	2-29, 2-31
87838	2-47
87839	2-29
87840	2-29
87841	2-29
87849	2-29
87866	2-19
87983	2-45
9006013	3-31
9006014	3-35
9006015	3-11
9006021	3-21
9006023	3-39
9006025	3-40
9006029	3-19
9006315	3-3
9006316	3-7
9006317	3-5
9006318	3-9
9006388	1-1
9006392	1-1
9006534	1-1
9006699	2-82
9006704	3-69

Part Number	Page Number
9006705	3-69
9006706	3-69
9006707	3-69
9006708	3-69
9006710	3-69
9006711	3-69
9006724	3-69
9006900	2-49
9006902	2-49
9006909	3-39
9006911	3-39
9006976	2-71
9006977	2-71
9006980	2-19
9006981	2-19
9006983	2-39
9006984	2-39
9006985	2-71
9006986	2-71
9007131	3-3, 3-5, 3-7, 3-9
9007175	2-71
9007176	2-71
9007372	2-49
9007374	2-49
9007391	2-45
9009383	3-69
9009990	3-45
9010085	3-45
9010086	3-45
9010740	2-11
9013148	2-71
9013149	2-71
9017556	3-37
9017557	3-33
9017984	4-11, 4-12
9017985	4-12
9019140	2-25
9019141	3-41
9020593	3-67
9020918	3-65
9021038	3-68
9021441	2-31

PART DESCRIPTION TO PAGE NUMBER CROSS REFERENCE LIST

A

Adapter Wldt, Wand, Vacuum, 3-39
Alarm Assy, Backup, 12-48vdc 82-102dba, 3-3, 3-5, 3-7, 3-9
Alarm Assy, Backup, 12/48vdc, 3-3, 3-5, 3-7, 3-9
Alarm Kit, Backup, Flsh, Ohg, Ev, Ci, 3-7
Alarm Kit, Backup, Flsh, Rear, Ev, Ci, 3-3
Alarm Kit, Backup, Strb, Rear, Ev, Ci, 3-5
Alarm Kit, Backup, Strobe, Ohg, Ev, Ci, 3-9
Alarm, Audio, 10-48vdc [Mallory], 2-19
Anchor [Shackle], .625 Thick, 3-68
Angle Wldt, Bmpr, Tower, Lh, 3-21
Angle Wldt, Bmpr, Tower, Rh, 3-21
Angle Wldt, Mtg, Door, 3-17
Angle, Bottom, 3-23
Angle, Cab, Rear [Drip Ledge, S20], 3-15
Angle, Cab, Side [Drip Ledge, S20], 3-15
Angle, Keeper, Cable, 2-35
Angle, Mtg, Alarm, 3-3, 3-5, 3-65
Angle, Mtg, Latch, 3-17
Angle, Mtg, Muffler, Vacfan, 2-47
Angle, Mtg, Wndw, Lh, 3-15
Angle, Mtg, Wndw, Rh, 3-15
Antenna, Telem [4g, 108"], 3-45
Antenna, Telem, 110 In [Gprs], 3-45
Arm Wldt, Brush, Main, Drive, Lh, 2-37
Arm Wldt, Brush, Main, Idler, 2-36
Arm Wldt, Cntrl, Dir, 2-23
Arm Wldt, Lift, Brush, 2-41
Arm Wldt, Lift, Lh, 3-25
Arm Wldt, Lift, Rh, 2-43
Arm, Idler, 2-37
Arm, Lever, Brake, 4.1 [Knott], 2-25
Arm, Lift, Hppr, W/ Label [S20] Jp, 2-49
Arm, Lift, Hppr, W/ Label [S20] Na, 2-49
Arm, Safety, Hppr, W/ Label [S20], 2-49
Arm, Safety, Hppr, W/ Label, Tj [S20], 2-49
Arm, Steering, 2-27
Armature and Fan Assembly, 4-7, 4-8
Armature Fan, 4-8
Armrest Assy, Rh, F/53845 [Grammer], 3-19

B

Ball, 4-5
Balljoint, M6 X 1.0 Fem, M6 X 1.0 Mal, 2-23
Bar, Cover, 2-61
Bar, Hex, Stl 0.75, 01.6l .50h Thru, 2-37
Bar, Sppt, Hppr Cover [S20], 3-61
Battery, Wet, 06vdc 420ah, 3-43
Battery, Wet, 18vdc 0340ah (Obsolete, Replaced by None), 3-47
Battery, Wet, 18vdc 0440ah, 3-46
Bearing, 4-7, 4-8
Bearing, Ball, 0.67b 1.57d 0.47w, 2-47
Bearing, Ball, 0.98b 2.05d 0.59w, 2-37
Bearing, Ball, 1.18b 2.44d 0.63w, 2-25
Bearing, Ball, 1.38b 2.83d 0.67w, 2-36
Bearing, Flng, 2hole, 0.50b, 2-21
Bearing, Flng, 2hole, 0.50b [Nyl], 2-21
Bearing, Flng, 2hole, 1.00b, 2-49
Bearing, Needle, 4-6
Bearing, Self Align, 1.00b 1.63d, 2-27
Bearing, Self Align, 1.25b 2.00d, 2-49
Bearing, W/ Collar, 0.75b 1.85d 1.06w, 2-36
Bellcrank, Lift, Brush, Side, Lh, 2-41
Bellcrank, Lift, Brush, Side, Rh, 2-41
Bellows, Solenoid, .75-16, 1.5l, 2-45
Belt, V, 31.5l [3v], 1-1, 2-37
Belt, V, 32.2l [07m], 2-47
Belt, V, 33.5l [3v], 1-1, 2-39
Belt, V, 54.0l [3vl], 1-1, 2-39
Block, Adj, 2-33
Block, Adj, Pivot, 2-41, 3-23
Bolt, Eye, .38-16 X 3.22, 0.28 Eye, 2-47
Bolt, Gearbox, 2-31
Bolt, Gearbox, Drive Wheel, 2-29
Bolt, Shld, 10mmd X 010mm, M8 X 1.25, 2-31
Boot, .63id .29l .90w, 2-19
Boot, 90deg .50id .57id X .84id 1.0l,Blk, 2-29, 2-31, 2-39
Boot, Bellows, 3.1l 4.4w 2.8h 1hole, Neo, 2-21
Boot, Circuitbreaker, 3-3, 3-5, 3-7, 3-9, 3-65
Boot, Switch, Ignition, 2-19
Bracket Kit, Panl, Cntrl, W/Label, Jp, 2-71
Bracket Kit, Panl, Cntrl, W/Label, Na, 2-71
Bracket Wldt, Fltr, 2-61
Bracket Wldt, Latch, 2-15
Bracket Wldt, Mtg, Bmpr, 3-21
Bracket Wldt, Mtg, Door, 3-17
Bracket Wldt, Mtg, Fan, 2-47
Bracket Wldt, Mtg, Motor, 2-39
Bracket Wldt, Steering, Tilt, 2-21
Bracket Wldt, Stop, Brush, 2-9
Bracket Wldt, Switch, Shakr, 2-45
Bracket Wldt, Tank/Pump Sppt [S20], 3-49
Bracket, Adj, Seat, 2-11
Bracket, Adj, Strike, 2-17
Bracket, Angle, Hppr Bottom Stiffener, 2-51
Bracket, Angle, Keeper, Cable, 2-41, 3-23
Bracket, Angle, Mtg, Brg, 2-36
Bracket, Angle, Mtg, Pin, Latch, 2-15
Bracket, Angle, Pivot, Door, Dump, Lh, 2-57
Bracket, Angle, Pivot, Door, Dump, Rh, 2-57
Bracket, Arm, Side Brush, 2-43
Bracket, Door, Indicator, 2-57
Bracket, Hinge, Door, 2-7, 2-9
Bracket, Inlet, Vacfan, 2-45
Bracket, Latch, Door, 3-17
Bracket, Latch, Keeper [Southco], 2-61
Bracket, Latch, Mtg, Strike, 2-17
Bracket, Lift, Brush, Auto, 2-35
Bracket, Mtg, Angle, Air Fltr, 1-1
Bracket, Mtg, Bmpr, Front, Lh, 2-51
Bracket, Mtg, Bmpr, Front, Rh, 2-51
Bracket, Mtg, Circuitbreaker, Ele, 2-19
Bracket, Mtg, Cyl, 2-57
Bracket, Mtg, Fan, Ev, 3-15
Bracket, Mtg, Fltr, Hyd, 2-67
Bracket, Mtg, Hinge, 2-51
Bracket, Mtg, Horn, 3-7, 3-9
Bracket, Mtg, Mirror, 3-11, 3-13
Bracket, Mtg, Mirror, Brush, 3-11, 3-13
Bracket, Mtg, Mirror, Top, 3-11, 3-13
Bracket, Mtg, Motor, Lh, 3-25
Bracket, Mtg, Motor, Rh, 2-43
Bracket, Mtg, Panel, Cab, 3-15
Bracket, Mtg, Pedal, Lh, 2-23
Bracket, Mtg, Pedal, Rh, 2-23
Bracket, Mtg, Sgl Spray Nozzle [S20], 3-53, 3-55
Bracket, Panl, Contrl, W/Label, Jp, 2-71
Bracket, Panl, Contrl, W/Label, Na, 2-71
Bracket, Protector, Float Switch, 3-49
Bracket, Retainer, Skirt, Rh, Sbdc, 3-33, 3-37
Bracket, Rod, Safety, 2-53
Bracket, Sbdc, Lh, 3-35
Bracket, Sbdc, Rh, 3-31, 3-35
Bracket, Sidebrush, Lh, 3-25
Bracket, Sppt, Battery, 3-43
Bracket, Sppt, Ele Panl, 2-71
Bracket, Stiffener [S20], 3-61
Bracket, Stop, Brush Door, 2-7, 2-9
Bracket, Switch, Brake, 2-25
Bracket, Switch, Shaker, 2-45
Bracket, Tank Retainer, 3-51
Bracket, Tray, 2-59
Brake Assy, 2-25
Brake Kit, Linkage Ci [S20], 2-25
Brkt, Blu Spotlight, Fr, Frame Mtg, 3-65
Brkt, Blu Spotlight, Rr, Frame Mtg, 3-65
Brush Box and Plate Assembly, 4-7, 4-8
Brush Kit, Motor, W/ Wire [Av], 2-31
Brush Spring, 4-7, 4-8
Brush-Side Swp, Flatwire, 2-3
Brush-Side Swp, Polypropylene, 2-3
Brush-Side Swp, Soft Nylon, 2-3
Brush-Sweep, Natural Fiber, Spiral, 2-3
Brush-Sweep, Polyester 24 Dr, Spiral, 2-3
Brush-Sweep, Polyester 8 Dr, Spiral, 2-3
Brush-Sweep, Polypropylene and Wire, Spiral [Bronze], 2-3
Brush-Sweep, Polypropylene, Spiral, 2-3
Brush-Sweep, Wedge, Polypropylene, Spiral, 2-3
Brush-Sweep, Window, Polypropylene, Spiral, 2-3
Brush, Motor, Ele [Av#a91-112e], 4-8
Brush, Motor, W/Wire [Av], 4-7

Bumper Kit, Corner, Rear, Ci [S20], 3-21
Bumper Wldt, Front, 2-51
Bumper, Rbr, 0.90d 0.38th 0.18h, 2-11, 2-13
Bumper, Rbr, 1.0d 0.38th .25-20, 2-9
Bumper, Rbr, Adh, 0.50d 0.14th, 3-63
Busbar, .06 0.6w 2.5l 2/.28h, 2-71
Busbar, Fuse, .6 0.6w 0.8h 2.0l, 2-71
Bushing, 4-5
Bushing, Flng, 0.50b 0.59d 0.38l, 2-47
Bushing, Sleeve, 0.50b 0.59d 0.38l, Stl, 2-41
Bushing, Sleeve, 0.63b 0.72d 0.25l, 2-35, 2-37
Bushing, Sleeve, 0.75b 0.88d 0.75l, Tef, 2-57
Bushing, Sleeve, 0.78b 0.86d 0.93l, Bnz, 2-25
Bushing, Sleeve, 1.00b 1.13d 0.99l, Fgl, 2-49
Buss Bar, Copper, Offset, Contactor, 3-57
Button, Cntrl, Horn [Isolated], 2-21

C

Cable Assy, 2ga [S20e - Telemetry], 3-45
Cable Assy, Battery, 04ga, 2clamp, 175a, 3-43
Cable Assy, Sb175/Sb350, Gray, 36vdc, 3-41
Cable, 04ga 12.0l Blk .34ring /.34ring, 2-73
Cable, 04ga 15.0l Blk .28ring /.34ring, 2-73
Cable, 04ga 21.0l Blk .28ring /.34ring, 2-73
Cable, 04ga 30.0l Blk .34ring /.34ring, 2-73
Cable, 04ga 32.0l Blk .34ring /.34ring, 2-73
Cable, 04ga 48.0l Blk .28ring /.34ring, 2-73
Cable, 04ga 60.0l Blk .34ring /.34ring, 2-73
Cable, 06ga 11.0l Blk .28ring /.34ring, 2-73
Cable, 2ga, Blk [Telemetry, S20e], 3-45
Cable, Battery, 04ga 13.5l Blk, 2clamp, 3-43
Cable, Battery, 04ga 40.0l Blk, 2clamp, 3-43
Cable, Glv .13d 010.0l .52eye /.52eye, 3-21
Cable, Glv .13d 010.3l .4clevis /.25-28, 2-35
Cable, Glv .13d 024.2l .25eye /.25eye, 2-11, 2-13
Cable, Glv .13d 031.0l .4clevis /.55eye, 2-35
Cable, Ss .12d 60.25l .55eye / M6-1.0, 2-41
Cable, Ss .12d 89.0l .55eye / M6-1.0, 3-23
Cable, Ss .19d 008.5l .55eye / M6-1.0, 2-43, 3-25
Cam, Plt, Brake [Nickel], 2-25
Cap Assembly, 4-5
Cap Assy, Tank, Drain, 3-49
Cap Screw, 4-3
Cap, Breather, Hyd, 1-1
Cap, Breather, Hyd, 5.2 Ds, 2-67
Cap, End, 4-3, 4-6
Cap, Hub, Dust, 2.57d 0.77l, 2-25
Cap, Screw, 4-6
Cap, Vinyl, 0.23id, 1.50l, 2-37
Cap, Vinyl, 3.28d 0.45l, 2-37
Channel Wldt, Ohg, Lh, 3-11, 3-13
Channel Wldt, Ohg, Rh, 3-11, 3-13
Channel, .19, 2.8w 2.0 04.0l, 2/ M10, 2-47
Channel, Latch, 2-15
Channel, Mtg, Lock, 2-49
Channel, Mtg, Steering Latch, 2-21
Channel, Recirculation Flap, 2-5
Channel, Sppt, Battery, 3-43
Charger, 36vdc 50a 230vac 1ph 50hz, 3-41
Charger, 36vdc/120a, 480vac 3ph, 3-41
Charger, 36vdc/144a, 208/240vac, 1 Ph, 3-41
Charger, 36vdc/160a, 208/240vac, 3 Ph, 3-41
Circuitbreaker, 02.5a, Resetable, 3-65
Circuitbreaker, 05.0a, Resetable, 3-3, 3-5, 3-7, 3-9
Circuitbreaker, 15.0a, Resetable, 3-57
Circuitbreaker, 15a, Resetable, 2-19
Circuitbreaker, 2.5a, Resetable, 2-19, 3-3, 3-5, 3-7, 3-9, 3-15
Circuitbreaker, 20a, Resetable, 2-19
Clamp, Cable, Nyl, 0.62d, Nat, 3-45
Clamp, Cable, Stl, 0.69d X 0.62w, 1hole, 2-5, 2-57, 2-59
Clamp, Cable, Stl, 0.75d X 0.75w, 1hole, 3-53, 3-55
Clamp, Cable, Stl, 1.0x2.0x0.62w, 1hole, 2-49
Clamp, Cable, Stl, 1.25d X 1.00w, 1hole, 2-19, 3-7, 3-9
Clamp, Hose, Wormdrive, 0.25-0.62d, .31w, 3-49, 3-53, 3-55
Clamp, Hose, Wormdrive, 3.56-4.50d, .50w, 2-47
Clamp, Steering, 2-29
Clevis, Adj, 0.25pin, 0.25-28 Lh, Pl, 2-25
Clevis, Adj, 0.25pin, 0.25-28 Rh, Pl, 2-25, 2-35
Clevis, Adj, M6 Pin, M6 X 1.0 Rh, Pl, 2-41, 2-43, 3-23, 3-25
Clip, Grip, Finger, 1.00-1.88d,White Vyl, 3-39
Clip, Grip, Pipe, 0.50, Plstc, 3-15
Clip, Keeper, 2-59, 2-61
Clip, Spring, Prop Arm, 2-49
Column, Steering, 09.9l 0.86d 36tooth, 2-21
Commutator Endhead, 4-7, 4-8
Cone, 4-5
Connector, 350a, Gray, 3-41
Connector, Anderson, 175a, Gray, 3-41
Connector, Anderson, 175a, Orange, 3-46, 3-47
Connector, Mal, 2cav, Mp280 Sealed, 3-57
Contactor, 36vdc [Spco], 3-3, 3-5, 3-7, 3-9
Contactor, 36vdc [Spno], 2-71
Contactor, 36vdc, 100a, Sp, No, 2-45, 3-3, 3-5, 3-7, 3-9
Control Box Assy Kit, Replmt, Telem[Intl], 3-45
Control Box Assy Kit, Replmt, Telem[Usa], 3-45
Controller, 36vdc [Only F/ Tnv], 2-71
Cord, Sponge, Neo, 1.0d 36.3l, 1-1, 2-57
Cover Wldt, Lh, Sbdc [S20], 3-37
Cover Wldt, Rh, Sbdc [S20], 3-33, 3-37
Cover, Hppr, 2-53
Cover, Hppr, Re-Work [S20], 3-61
Cover, Mold, 2-61
Cover, Plt, Floor, 2-23
Cover, Wldt, Component, Ele, W/Label [S20] Jp, 2-71
Cover, Wldt, Component, Ele, W/Label [S20] Na, 2-71
Cyl, Hyd, 2.5b 9.0l 01.50strk, 2500, 3-23
Cylinder, Hyd, 2.0b 08.0l 04.00strk 2500, 2-57
Cylinder, Hyd, 2.0b 19.0l 12.00strk 1500, 2-27
Cylinder, Hyd, 2.5b 24.8l 13.50strk 3000, 2-49

D

Damper, Inlet, 2-45
Deflector, Hppr, Lh, 2-51
Deflector, Hppr, Rh, 2-51
Detent Adaptr, 4-5
Diode, Ele, Plug, 2-19, 3-3, 3-5, 3-7, 3-9, 3-23, 3-57
Disc, 0.06, 04.39d 01.67b, 4/.30h 3.8bc, 2-37
Disc, 0.08, 04.39d 02.56b, 4/.28h 3.8bc, 2-36
Door Wldt, Brush, Lh, 2-9
Door Wldt, Brush, Rh, 2-7
Door Wldt, Cab, 3-17
Door Wldt, Cleanout [S20], 2-61
Door Wldt, Dump, Hppr, 2-57
Door Wldt, Wand, Vacuum, 3-39
Door, Access, Hppr, 2-51
Drive, 4-3, 4-6
Drive Endhead, 4-7, 4-8
Duct, Vyl, 0.74 X 1.50 .75d Max 48.0l, 3-7, 3-9, 3-15

E

Elbow, Mold, 2-61
Element, Fltr, Hepa, 10 X 18 X 4.87 S20, 3-63
Element, Fltr, Hyd Oil, 1-1, 2-67
Extinguisher Kit, Fire, Ci [S20], 3-40
Extinguisher, Fire, 2.5 Lb Dry, 3-40

F

Fan, 4-7
Fan, Defroster, 36vdc, 07.9d, 3-15
Fastener, Wire, Tie [Button Head], 2-19, 2-71
Field Coil Kit, 4-7, 4-8
Filter Assy, Hyd, 10mic 035gpm, Spin-On, 2-67
Filter Box Wldt, Hepa, Lower [S20], 3-63
Filter, Cyl, 11.09d, 13.31l, 6.724 Id, 1-1, 2-61
Filter, In-Line, Pf06/Pf06 60 Micron, 3-49
Fitting, Body, Nozzel, Brs, 3-53, 3-55
Fitting, Brs, 3/8npt, Valve, Breather, 3-49
Fitting, Brs, Str, Bm03/Pm02, 2-57, 2-61
Fitting, Cap, Brs, 3-53, 3-55
Fitting, Draincock, E90, .25npt, 3-49
Fitting, Grease, 2-29
Fitting, Grease, Str Pm04 .47l, 2-27, 2-49
Fitting, Hyd, E45, Fm04/Om04, 3-27
Fitting, Hyd, E45, Fm06/Om06, 2-27, 2-69
Fitting, Hyd, E45, Jm04/Om04, 3-27
Fitting, Hyd, E45, Jm06/Om06, 2-27, 2-69
Fitting, Hyd, E90, Ff06/Fm06, 2-21
Fitting, Hyd, E90, Fm04/Om04, 2-57, 3-23
Fitting, Hyd, E90, Fm04/Om06, 2-49
Fitting, Hyd, E90, Fm06/Om06, 2-27, 2-49, 2-69
Fitting, Hyd, E90, Fm08/Om10, 2-43, 2-67, 3-25
Fitting, Hyd, E90, Fm08/Om12, 2-67
Fitting, Hyd, E90, Fm12/Om12, 2-67
Fitting, Hyd, E90, Jf06/Jm06, 2-21
Fitting, Hyd, E90, Jm04/Om04, 2-57, 3-23
Fitting, Hyd, E90, Jm04/Om06, 2-49
Fitting, Hyd, E90, Jm06/Om06, 2-27, 2-49, 2-69
Fitting, Hyd, E90, Jm08/Om10, 2-43, 2-67, 3-25
Fitting, Hyd, E90, Jm08/Om12, 2-67
Fitting, Hyd, E90, Jm12/Om12, 2-67
Fitting, Hyd, E90, Om04/Qm04, 2-69
Fitting, Hyd, Plug, Fm08, 2-67
Fitting, Hyd, Plug, Jm08, 2-67
Fitting, Hyd, Rst, Fm04/Of04, .047, 2-49
Fitting, Hyd, Rst, Jf04/Jm04, .047, 2-49
Fitting, Hyd, Str, Ff08/Fm06, 2-43, 3-25
Fitting, Hyd, Str, Fm04/Om04, 2-69
Fitting, Hyd, Str, Fm04/Om06, 2-68
Fitting, Hyd, Str, Fm06/Fm06 Bh, 3-29
Fitting, Hyd, Str, Fm06/Om06, 2-21
Fitting, Hyd, Str, Fm06/Om08, 2-39
Fitting, Hyd, Str, Fm06/Om10, 2-31
Fitting, Hyd, Str, Fm08/Om06, 2-21
Fitting, Hyd, Str, Fm08/Om10, 2-67
Fitting, Hyd, Str, Fm08/Om12, 2-67
Fitting, Hyd, Str, Fm12/Om10, 2-39
Fitting, Hyd, Str, Fm6/Om08, 2-68
Fitting, Hyd, Str, Jf08/Jm06, 2-43, 3-25
Fitting, Hyd, Str, Jm04/Om04, 2-69
Fitting, Hyd, Str, Jm04/Om06, 2-68
Fitting, Hyd, Str, Jm06/Jm06, 3-29
Fitting, Hyd, Str, Jm06/Om06, 2-21
Fitting, Hyd, Str, Jm06/Om08, 2-39, 2-68
Fitting, Hyd, Str, Jm08/Om06, 2-21
Fitting, Hyd, Str, Jm08/Om10, 2-67
Fitting, Hyd, Str, Jm08/Om12, 2-67
Fitting, Hyd, Str, Jm12/Om10, 2-39
Fitting, Hyd, Str, Om04/Qm04, 2-69
Fitting, Hyd, Tee, Ff06/Fm06/Fm06, Run, 2-21, 2-69
Fitting, Hyd, Tee, Fm06/Fm06/Om06, Br, 2-68
Fitting, Hyd, Tee, Fm06/Fm06/Om06, Run, 2-67
Fitting, Hyd, Tee, Jf06/Jm06/Jm06, Run, 2-21
Fitting, Hyd, Tee, Jm06/Jm06/Om06, Br, 2-68
Fitting, Hyd, Tee, Jm06/Jm06/Om06, Run, 2-67, 2-69
Fitting, Nyl, Qdc, E90, Bm06/ Qm10, 3-49
Fitting, Plstc, E90, Bm04/Pm04, Nyl, 3-49
Fitting, Plstc, E90, Bm06/Bm06, 3-49
Fitting, Plstc, E90, Bm06/Pm04, Nyl, 3-53, 3-55
Fitting, Plstc, Str, Bm04, Cplg, Male, 3-49
Fitting, Plstc, Str, Bm04, Cplg,Fem[Tco], 3-49
Fitting, Plstc, Str, Bm06, Cplg, Fem, 3-49
Fitting, Plstc, Str, Bm06, Cplg, Male, 3-49
Fitting, Plstc, Str, Bm06/Bm06, 3-49
Fitting, Plstc, Str, Bm06/Pm06, 3-49
Fitting, Plstc, Str, Pf04/Pf04, Bh, 3-49
Fitting, Plstc, Tee, Bm03/Bm06/Bm06, Br, 3-49
Fitting, Plstc, Y, Bm06/Bm06/Bm06, Nyl, 3-55
Fitting, Plug, Org, #6, Valve [Cec], 4-10
Flange Mounting, 4-3
Flange, Brg, 1.9id 2h, 2-36
Flap, Recirculation, 1-1, 2-5
Flasher, 12/48vdc 5a [6309/12-48v], 3-3, 3-5, 3-7, 3-9
Frame Kit, Hook, Winch, 3-68
Frame Wldt, Ele [S20], 2-5
Frame Wldt, Main [S20 Ele], 2-5
Fuse, 002a, 250vdc, Cartridge, 3-45
Fuse, 080a, 0.88 2.4l, 125volt,Slow-Blow, 2-71
Fuse, 100a, 0.88 2.4l, 125volt, 2-71

G

Gasket, .19, 4.05id 5.29od [Buna], 3-49
Gasket, Cap, Breather, Hyd, 2-67
Gasket, Cover, 1-1, 2-61, 2-71, 3-63
Gasket, Door, Wand, Vacuum, 3-39
Gasket, Tray, 2-59, 2-61
Gauge, Discharge, Battery, 36vdc, Led, 2-19
Gauge, Hourmeter, 05-277vdc/Vac, 2-Hole, 2-19
Gauge, Sensing, Level, 2-67
Gear, Drive, 2-29
Gearbox, 90, Drive Wheel, Rear [Hu], 2-29
Gearbox, Drive, 90, Wheel [Zf Gk20], 2-31
Gerotor Set, 4-3, 4-6
Grip, Vyl, 2-45, 2-68
Grommet, Pye, 0.37id, F/1.5h, .13 Matl, 3-49
Grommet, Rbr, 0.50id, F/0.8h, .09 Matl, 2-71
Grommet, Rbr, 0.62id, F/0.9h, .06 Matl, 2-57
Grommet, Rbr, 0.69id, F/1.0h, .25 Matl, 2-51
Grommet, Rbr, 0.89id, F/1.2h, .14 Matl, 3-65
Grommet, Rbr, 1.06id, F/1.4h, .19 Matl, 3-7, 3-9, 3-65
Grommet, Rbr, 1.50id, F/1.8h, .19 Matl, 3-53, 3-55
Grommet, Taillight, 5.44 X 3.56, 2-5
Guard, Belt, Brush Drive, W/ Label, Jp, 2-39
Guard, Belt, Brush Drive, W/ Label, Na, 2-39
Guard, Brush, 2-43, 3-25
Guard, String, Motor, Brush, 2-43, 3-25

H

Handle Wldt, Brush, Side, 2-41
Handle Wldt, Door, 3-11, 3-13
Handle Wldt, Latch, Shrd, 2-15
Handle Wldt, Lift, Brush, 2-33
Handle, Cntrl, Valve, 2-68
Handle, Door, 3-17
Harness Kit, Main, Ele, Replmt [S20], 2-82
Harness, Alarm / Strobe, 36vdc [S20], 3-3, 3-5
Harness, Alarm / Strobe, Ohg, 36vdc[S20], 3-7, 3-9
Harness, Blu Spotlight [S20], 3-65, 3-66
Harness, Brush, Side, Lh, 36Vdc [S20], 3-26
Harness, Cntrl, Wet Dust [S20ic], 3-59
Harness, Ele [Telemetry, S20e], 3-45
Harness, Fan, Ic [S20], 3-15
Harness, Hppr, 36vdc [S20], 2-82
Harness, Hppr, Cover [S20], 2-82
Harness, Main, Ele [S20], 2-82
Harness, Seat [S20], 3-19

Harness, Shakr, Motor [S20], 2-82
Harness, Wire, Battery, 3-46, 3-47
Harness, Wire, Controller, 2-73
Harness, Wire, Seat [S20], 2-13
Headband, 4-8
Headlight , 36v, 2-51
Headlight, 12-48vdc, 10watt, Rnd Led, Ul, 2-51
Headlight, 36vdc, 60watt 1.7a, 3-3, 3-5, 3-7, 3-9
Headlight, 36vdc, Led, UL, 2-51
Hepa Airbox, Upper [S20], 3-63
Hinge, .25pin .12 3.0w 03.0l, 4/0.28sl, 2-51
Hinge, .25pin .12 3.0w 04.5l, 6/0.38sl, 2-11, 2-13
Hinge, .38pin .12 3.5w 07.8l, 4/0.38h, 2-7, 2-9
Hinge, .38pin .12 3.5w 4.0l [Oal], 2-53
Hood, Stiffener Wldt Lh [S20], 3-61
Hood, Stiffener Wldt Rh [S20], 3-61
Hopper [S20], 2-51
Horn, 36vdc, 115 Dba, 2-5
Hose Assy, W/2cuff, 2.0d 120l 2.0/2.0, 3-39
Hose, Afmkt, Pvc, Brd, 0.38id, 08ft, Clr, 3-49, 3-53, 3-55
Hose, Afmkt, Pvc, Brd, 0.38id, 20ft, Clr, 3-55
Hose, Afmkt, Pvc, Clr, 0.25id, 03ft, 3-49
Hose, Flex, Vacuum, 04.0d, 021.0l, 2-47
Hose, Flex, Vacuum, 04.0d, 21.0l, 1-1
Hose, Hyd, Low06, Jf06e45/Jf06str, 022.0, 2-65
Hose, Hyd, Low06, Jf06e90/Jf06str, 052.0, 2-65
Hose, Hyd, Low06, Jf06str/Jf06str, 026.0, 2-65
Hose, Hyd, Low06, Of06e45/Of06str, 022.0, 2-65
Hose, Hyd, Low06, Of06e90/Of06str, 052.0, 2-65
Hose, Hyd, Low06, Of06str/Of06str, 026.0, 2-65
Hose, Hyd, Low08, Jf08e45/Jf08str, 024.0, 2-65
Hose, Hyd, Low08, Jf08e90/Jf08str, 024.0, 2-65
Hose, Hyd, Low08, Jf08e90/Jf08str, 032.0, 2-65
Hose, Hyd, Low08, Of08e45/Of08str, 024.0, 2-65
Hose, Hyd, Low08, Of08e90/Of08str, 024.0, 2-65
Hose, Hyd, Low08, Of08e90/Of08str, 032.0, 2-65
Hose, Hyd, Med04, Jf04e45/Jf04str, 018.0, 2-65
Hose, Hyd, Med04, Jf04e90/Jf04str, 088.0, 2-65
Hose, Hyd, Med04, Of04e45/Of04str, 018.0, 2-65
Hose, Hyd, Med04, Of04e90/Of04str, 088.0, 2-65
Hose, Hyd, Med06, Jf06e45/Jf06str, 021.0, 2-65
Hose, Hyd, Med06, Jf06e90/Jf06str, 068.0, 2-65, 3-29
Hose, Hyd, Med06, Jf06e90/Jf06str, 100.0, 2-65, 3-29
Hose, Hyd, Med06, Jf06str/Jf06str, 030.0, 2-65
Hose, Hyd, Med06, Jf06str/Jf06str, 042.0, 2-65
Hose, Hyd, Med06, Of06e45/Of06str, 021.0, 2-65
Hose, Hyd, Med06, Of06e90/Of06str, 068.0, 2-65, 3-29
Hose, Hyd, Med06, Of06e90/Of06str, 100.0, 2-65, 3-29
Hose, Hyd, Med06, Of06str/Of06str, 030.0, 2-65
Hose, Hyd, Med06, Of06str/Of06str, 042.0, 2-65
Hose, Hyd, Suc12, Jf12e90/Jf12str, 024.0, 2-65
Hose, Hyd, Suc12, Of12e90/Of12str, 024.0, 2-65
Hose, Hyd, Tc04, Jf04str/Jf04e90, 070.0, 2-65
Hose, Hyd, Tc04, Jf04str/Jf04str, 020.0, 3-29
Hose, Hyd, Tc04, Jf04str/Jf04str, 028.0, 3-29
Hose, Hyd, Tc04, Of04str/Of04e90, 070.0, 2-65
Hose, Hyd, Tc04, Of04str/Of04str, 020.0, 3-29
Hose, Hyd, Tc04, Of04str/Of04str, 028.0, 3-29
Hose, Hyd, Tc06, Jf06e90/Jf06str, 024.0, 2-65
Hose, Hyd, Tc06, Jf06e90/Jf06str, 034.0, 2-65
Hose, Hyd, Tc06, Jf06e90/Jf06str, 086.0, 3-29
Hose, Hyd, Tc06, Jf06e90/Jf06str, 096.0, 3-29
Hose, Hyd, Tc06, Jf06str/Jf06str, 020.0, 2-65
Hose, Hyd, Tc06, Of06e90/Of06str, 024.0, 2-65
Hose, Hyd, Tc06, Of06e90/Of06str, 086.0, 3-29
Hose, Hyd, Tc06, Of06e90/Of06str, 34.0, 2-65
Hose, Hyd, Tc06, Of06str/Of06str, 020.0, 2-65
Hose, Vacuum, 0.16id X 060.0l, 2-57
Housing, 4-3
Housing Wldt, Fan, 2-47
Housing, Brg, Drive,Brush, 2.5d 2.0b 5.0, 2-37
Housing, Fan, Rear, Impeller, 2-47
Housing, Flng, Brg, 2-47
Housing, Upper, Gearbox, Drive Wheel, 2-29
Hub, Adapter, Brush, 1.00b, 2-43, 3-25
Hub, Guide, End, Actuator, 2-39

I

Impeller, 9.00d X 1.40w X 0.376b, 2-47
Instr, Use&Care, Wallchart [Ts20] (ONLINE ONLY), 3-69
Instr. Repair Info, Motor, 4-3
Instr. Valve Repair Info, 4-5
Insulation, Acstc, 3-13
Insulation, Acstc, 0.5, 04.6 X 04.4, 2-47
Insulation, Acstc, 0.5, 08.6 X 03.6, 2-47
Insulation, Acstc, 0.5, 08.6 X 04.2 Ntch, 2-47
Insulation, Acstc, 0.5, 08.6 X 04.6 Ntch, 2-47
Insulation, Acstc, 0.5, 08.7 X 04.2 Ntch, 2-47
Insulation, Acstc, 0.5, 13.0 X 17.8 Ntch, 2-11, 2-13
Insulation, Acstc, 0.5, 15.4 X 20.5 Ntch, 2-11, 2-13
Insulation, Acstc, 0.5, 2.3 X 11.1 Ntch, 2-11, 2-13
Insulation, Acstc, 0.5, 21.4 X 20.6 C-O, 2-11, 2-13
Insulation, Acstc, 0.5, 21.5 X 12.2 Ntch, 2-11
Insulation, Acstc, 0.5, 31.6 X 14.1 Ntch, 2-11, 2-13
Insulation, Acstc, 0.5, 32.0 X 21.6 Ntch, 2-11
Insulation, Acstc, 0.5, 4.5 X 11.0 Ntch, 2-11, 2-13
Insulation, Acstc, 0.5, 9.2 X 11.8 Ntch, 2-11, 2-13
Insulation, Acstc, 0.8, 06.6 X 03.0 Slit, 2-11
Insulation, Acstc, 2.0, 02.0 X 12.0, 2-5
Insulation, Acstc, Rnd, 0.8, 02.5d 0.5h, 2-21

K

Key-Wdruff 0.16 0.662 Asa#0505, 4-7
Key, Ignition [Set Of 2], 2-19
Key, Sq, 0.12 X 0.12, 1.00l, 2-47
Key, Sq, 0.19 X 0.19, 1.38l, 2-39
Key, Sq, 0.25 X 0.25, 1.00l, 2-37
Key, Woodruff, 0.19 0.75 [Asa0606], 2-47
Keychain, Rectangle, Parts & Service, 2-19
Kit, Detent In, 4-5
Knob, 1.12d 3.86l M10 X 1.5, Plstc Tpr], 2-33, 2-41
Knob, Star, 2.75d 4ear 1.1l M8x1.25, 2-61, 3-63
Knob, Tee, 0.38-16, 2.5 X 1.0 1.1l,Plstc, 2-21

L

Label Set, Opertnl [S20 Ele], 2-83
Label [Cyclone, Sweepmax S20], 2-83
Label Set, Info/Hzrd [S20], 2-83
Label, Hook, Winch, 3-68
Label, Model [S20], 2-83
Label, Watershield [S20], 3-57
Latch, 2-15, 2-53, 3-17
Latch, Door, 2-51
Latch, Door [Southco 91-562-07], 2-61, 3-63
Latch, Paddle, Rwk, 2-17
Latch, Swell, 2-7, 2-9
Lead Assembly Kit, 4-8
Lever, Adj, Metal, 2-41, 3-23
Lever, Adj, Plstc, 2-33
Lever, Brush Lift, 2-33
Lever, Stop, Brake, 2-25
Lever, Vacfan, 2-45
Light, Led, .312d, 36 Vdc [Tri-Color], 3-57
Light, Led, 36vdc, 4.8d [Sealed Beam], 3-3, 3-5, 3-7, 3-9
Light, Panl, 36vdc, 1.1 X 1.0, 2-19
Light, Spot, Blue, Led, 3-65
Light, Strobe, Amb, Led, 3-3, 3-5, 3-7, 3-9
Link Assy, Valve Handle, 2-68
Link, Lift, Main Brush, 2-33

M

Maint Kit, 400hr [S20 Ele], 1-1
Maint Kit, 800Hr [S20 Ele], 1-1
Manual, Oprtr [S20 Ele, Cn], 3-69
Manual, Oprtr [S20 Ele, Ptb], 3-69
Manual, Oprtr [S20 Elec, En], 3-69
Manual, Oprtr [S20 Elec, Es], 3-69
Manual, Oprtr [S20 Elec, Fr], 3-69
Manual, Oprtr [S20 Elec, Jp], 3-69
Manual, Parts [S20 Ele, En], 3-69
Manual, Service [S20 Gas/Lpg/Dsl, En], 3-69
Mirror, Convex, 06.7 X 06.2, 3-11, 3-13
Mirror, Flat, 05.0d, 3-11, 3-13
Molding, Afmkt, Trim, Pvc, .18 .31, 08Ft, 3-11, 3-13
Molding, Afmkt, Trim, Pvc, .18 .31, 20ft, 3-61
Molding, Trim, Pvc, .08-.11 39.2l, 3-39
Motor, Ele, 36vdc 1300rpm 2.10hp, 2-31
Motor, Ele, 36vdc 2130rpm 2.10hp (See Breakdowns), 2-29
Motor, Ele, 36vdc 22017rpm 0.11hp 03.3a, 2-61
Motor, Ele, 36vdc 2300rpm 4.00hp (See Breakdowns), 2-39
Motor, Electric, 36VDC 2.1 HP, 4-7
Motor, Electric, 36VDC 4.0 HP, 4-8
Motor, Hyd Gear In 08.9 B 1500, 4-3
Motor, Hyd, Gear, Int 08.9 Bi-Dir 1500, 2-43, 3-25
Motor, Hyd, Gear, Int 08.9 Bi-Dir 1500 (See Breakdown), 3-25
Motor, Hyd, Gear, Int 08.9 Bi-Dir 1500 (See Breakdowns), 2-43
Motor, Hyd, Gear, Int 14.9 Bi-Dir 1300, 2-31
Muffler Wldt, Fan, 2-47

N

Nozzle, Spray, 110 Deg, 0.05 Gpm, 3-53, 3-55
Nut, Coil, Nyl Patch, 4-12
Nut, Hex, Flexlock, .31-24, Thin, 2-47
Nut, Hex, Flexlock, .38-24, 2-47
Nut, Hex, Flexlock, .50-13, Thin, 2-43, 3-25
Nut, Hex, Flng, M10 X 1.50, 2-49, 2-71
Nut, Hex, Flng, M12 X 1.75, 2-5, 3-11, 3-13
Nut, Hex, Flng, M8 X 1.25, 2-5, 2-11, 2-13, 2-19, 2-23, 2-45, 2-49, 2-53, 2-57, 2-67, 2-71, 3-3, 3-5, 3-7, 3-9, 3-11, 3-13
Nut, Hex, Jam, .25-28, 2-25
Nut, Hex, Jam, .31-24, 2-45
Nut, Hex, Jam, .50-13, 2-15
Nut, Hex, Jam, .75-16, 2-27
Nut, Hex, Jam, M20 X 1.5, 2-21
Nut, Hex, Lock, .25-20, Nl, Ss, 2-9
Nut, Hex, Lock, .31-18, Nl, 2-15
Nut, Hex, Lock, .31-24, Nl, 2-7
Nut, Hex, Lock, .38-16, Nl, 2-39, 2-47
Nut, Hex, Lock, .38-16, Nl, Thin, 2-37
Nut, Hex, Lock, .75-10, Nl, 2-27, 2-37
Nut, Hex, Lock, #06-32, Nl, 2-45
Nut, Hex, Lock, #10-32, Nl, 2-61
Nut, Hex, Lock, M10 X 1.5, Nl, 2-23, 2-37, 2-39, 2-41, 2-49, 2-51, 3-19, 3-20
Nut, Hex, Lock, M12 X 1.75, Nl, 2-25, 2-37, 2-49
Nut, Hex, Lock, M14 X 1.50, Nl, 2-29
Nut, Hex, Lock, M16 X 2.00, Nl, 2-43, 3-25
Nut, Hex, Lock, M4 X 0.70, Nl, 2-57, 2-61, 3-15
Nut, Hex, Lock, M4 X 0.70, Nl, Ss, 3-49, 3-63
Nut, Hex, Lock, M5 X 0.80, Nl, 2-19, 2-25, 2-57, 3-3, 3-5, 3-7, 3-9, 3-17, 3-45
Nut, Hex, Lock, M6 X 1.00, Nl, 2-15, 2-19, 2-21, 2-23, 2-25, 2-45, 2-47, 2-51, 2-53, 2-57, 2-68, 3-3, 3-5, 3-7, 3-9, 3-11, 3-13, 3-17, 3-23, 3-39, 3-43, 3-45, 3-46, 3-47, 3-51, 3-61
Nut, Hex, Lock, M8 X 1.25, Nl, 2-5, 2-11, 2-13, 2-25, 2-33, 2-37, 2-41, 2-49, 2-51, 2-55, 2-57, 2-59, 2-67, 3-3, 3-5, 3-7, 3-9, 3-17, 3-19, 3-23, 3-31, 3-35, 3-65
Nut, Hex, Lock, M8 X 1.25, Nl, Ss, 2-29, 2-31, 2-43, 3-25
Nut, Hex, M8 X 1.25, 3-33, 3-37
Nut, Hex, Sltd, .75-16, 2-25, 2-27, 2-37
Nut, Hex, Std, .25-28, 2-35
Nut, Hex, Std, .25-28, Lh, 2-25
Nut, Hex, Std, .38-16, 2-23
Nut, Hex, Std, #10-32, Ss, 2-5
Nut, Hex, Std, 10-32, 2, 2-45
Nut, Hex, Std, M10 X 1.50, Ss, 2-37
Nut, Hex, Std, M3 X 0.50, 8, 2-19
Nut, Hex, Std, M6 X 1.00, 8, 2-23, 2-41
Nut, Hex, Std, M6 X 1.00, Ss, 2-43, 3-23, 3-25
Nut, Push, Bolt Retention, Stl,5/16 Thrd, 2-13
Nut, Short, 4-9, 4-10
Nut, Solenoid, 4-11
Nut, Wheel, M14-1.5, 2-29, 2-31

O

Ohg Kit, Ci [S20], 3-11
Oil, Hyd [El, Iso 32, 01Gal], 1-1

P

Pad, Pedal, Brake, 3.96l 2.36w 0.75, 2-25
Pad, Wear, Pye, 1.25d 1.0l, 2-27
Paint, Airdry, Blk, 12oz, 1-1
Paint, Airdry, Gray, 12oz [Enamel], 1-1
Paint, Airdry, Iron Gray,12oz[Pwdr Coat], 1-1
Paint, Airdry, Off-White, 12oz, 1-1
Paint, Airdry, Teal, 12oz, Solid, 1-1
Pane Assy, Windshield, 3-15
Panel Assy, Cab, 3-15
Panel Assy, Indicator Light, Ele, 2-19
Panel Wldt, Frame, Cab, 3-15
Panel Wldt, Frame, Rear, 3-15
Panel Wldt, Top, Ohg, 3-11, 3-13
Panel, Louver, 2-11, 2-13
Panel, Muffler, Fan, 2-47
Panel, Oprtr Station, W/ Label, Jp [S20e], 2-19
Panel, Oprtr Station, W/ Label, Na [S20e], 2-19
Parts Kit, Charger, Fi [S20e], 3-41
Pedal Wldt, Brake, 2-25
Pedal Wldt, Propel, Lower, Adj, 2-23
Pedal, Propel, Adj, Upper, 2-23
Pin, 4-6
Pin Assy, Clevis, Hppr Lift, 2-49
Pin Assy, Side Brush W/ Clip, 2-43, 3-25
Pin, 0.75d 02.0l, 1/.31h, Stl, 2-49
Pin, 1.25d 04.0l, 1/.34h, Stl, 2-49
Pin, Clevis, 0.25d X 0.75l, 2-25, 2-35, 2-43, 3-23, 3-25
Pin, Clevis, 0.31d X 1.62l, 3-23
Pin, Clevis, 0.37d X 0.75l, 2-43, 3-25
Pin, Clevis, 0.37d X 1.00l, 2-35
Pin, Clevis, 0.37d X 1.50l, 3-23
Pin, Clevis, 0.37d X 2.00l, 2-41
Pin, Clevis, 0.37d X 2.12l, 2-41
Pin, Clevis, 0.37d X 3.50l, 2-23
Pin, Clevis, 0.37d X 6.12l, 2-39

Pin, Clevis, 0.50d X 1.25l, 2-33
Pin, Clevis, 0.50d X 2.25l, 2-57
Pin, Clevis, 0.50d X 3.00l, 2-47
Pin, Clevis, 0.50d X 3.50l, 2-23
Pin, Clevis, 0.50d X 6.00l, 2-57
Pin, Cotter, .062 X 0.50, 2-25
Pin, Cotter, .094 X 0.75, 2-35
Pin, Cotter, .094 X 1.00, 2-45
Pin, Cotter, .125 X 0.75, 2-45
Pin, Cotter, .125 X 1.00, 2-23, 2-25, 2-57
Pin, Cotter, .125 X 1.25, 2-27, 2-37, 2-47, 3-23
Pin, Cotter, .187 X 1.75, 2-49
Pin, Cotter, .250 X 1.25, 2-49
Pin, Cotter, Hair, 0.31d .058 Wir, 2-11, 2-13, 2-35, 2-39, 2-43, 3-23, 3-25
Pin, Cotter, Hair, 0.38d .072 Wir, 2-5
Pin, Cotter, Hair, 0.38d .093 Wir, 2-23, 2-33, 2-41
Pin, Dowel, 0.3127d X 1.00l, 2-29
Pin, Hitch, .500d X 6.00l, Pl, 3-21
Pin, Roll, .094d X 0.87l, .094/.097, 2-51
Pin, Roll, .250d X 0.75l, .250/.256, 2-49
Pin, Roll, .250d X 2.00l, .250/.256, 2-37
Pin, Roll, .250d X 3.50l, .250/.256, 2-37
Pivot Wldt, 3-23
Pivot Wldt, Sba, 3-23
Plate Wldt, 3-23
Plate Wldt, Back, Hppr, 2-57
Plate Wldt, Damper, 2-45
Plate Wldt, Lh, 2-11, 2-13
Plate Wldt, Perma-Filter, 2-59
Plate Wldt, Pivot, 2-51
Plate Wldt, Rh, 2-11, 2-13
Plate Wldt, Winch Hook, 3-68
Plate, Backing, Brake, 2-25
Plate, Component, Ele, W/Label [S20] Jp, 2-71
Plate, Component, Ele, W/Label [S20] Na, 2-71
Plate, Cover, Muffler, 2-47
Plate, Grommet, Taillight, Ele, 2-5
Plate, Idler, Adjmt, 2-39
Plate, Mtg, 2-21
Plate, Mtg, Fire Extinguisher, 3-40
Plate, Mtg, Latch, 2-17
Plate, Mtg, Light, 3-3, 3-5
Plate, Mtg, Pin, 2-49
Plate, Mtg, Seatbelt, 3-20
Plate, Pivot, Lift, Auto, 2-35
Plate, Pump Mtg, 3-49
Plate, Retainer, Headlight, 2-51
Plate, Seal, 2-9
Plate, Shield, Top, 3-15
Plate, Spacer, Lift Arm, 2-49
Plate, Sppt, Bmpr, 2-51
Plate, Sppt, Headlight, 2-51
Plate, Sppt, Hinge, 3-17
Plate, Support, Skirt Sbdc, 3-33, 3-37
Plate, Switch / Light Mtg, 3-57
Plate, Wear, 2-51, 4-6
Plug & O-Ring, 4-5
Plug Assy, Hyd, 2-68
Plug Assy,Byd, 4-5
Plug Gage #6, 4-5
Plug Orifice [6112046] Duplicate, 4-12
Plug Wldt, Drive, Brush, 2-37
Plug Wldt, Idler, Brush, 2-36
Plug, Cap, Nat, 3-49
Plug, Gearbox, Drive Wheel, 2-29
Plug, Hole, Rnd, 0.22H .00-.06, Blk Nyl, 3-11, 3-13
Plug, Hole, Rnd, 0.25h .03-.12, Blk Nyl, 3-15
Plug, Hole, Rnd, 0.25h 0.8l, Brb, Nyl, 2-5, 2-49, 2-51
Plug, Hole, Rnd, 0.38h .3l, Plstc, 3-15
Plug, Hole, Rnd, 0.38h .4-.7, Blk Nyl, 2-5
Plug, Hole, Rnd, 0.44h .03-.12, Blk Nyl, 2-19
Plug, Hole, Rnd, 0.56h .03-.12, Blk Nyl, 2-5
Plug, Hole, Rnd, 0.75h .03-.12, Blk Nyl, 3-15
Plug, Hole, Rnd, 1.00h .14-.25, Blk Nyl, 3-15
Plug, Hole, Rnd, 1.37h 0.45l, Blk Nyl, 2-5
Plug, Hole, Rnd, 2.13h 0.6l, Blk Nyl, 2-5
Plug, Orifice, Valve, Hyd, .035, 4-10
Plunger, 4-5
Pouch, 3-67
Pouch, Manual, Weather Proof, 3-67
Pulley, Cable, 1.5d Nyl, 2-41, 3-23
Pulley, Cable, 2.5d 0.50b, .22d Cable, 2-35
Pulley, Cable, 3.0d 1.76b, .25d Cable, 2-49, 3-23
Pulley, Idler W/ Bearing, Plstc, 2-39
Pump, Hyd, Gear, Ext, 2, 00.45 3000, Cw, 2-39
Pump, Hyd, Gear, Ext, 2, 7.0cc 4.5cc, 2-39
Pump, Soltn, 36vdc, 65psi [Fast Ii+], 3-49

R

Race Thrust, 4-3
Race, Bearing, 4-6
Relay, 36vdc, 005a, Spdt No [Greenwich], 2-19
Relay, 36vdc, 100a, Spdt No [Cabelform], 2-71
Relay, 36vdc, 20a [Pokorny], 3-57
Relief Valve [Rv08-22a-0-N-35/24], 4-11, 4-12
Repair Info, 4-6
Reservoir, 02.8gal, W/ Label [6400e], 2-67
Resistor, 040.000hm, 0040watt, 2-19
Resistor, Ele, Plug, 2-71
Retainer, Front, 4-6
Retainer, Ring, Brake, 2-25
Retainer, Seal, Dust, .12 X 0.8w X 33.6l, 2-59
Retainer, Seal, Hppr Door, Side, 2-57
Retainer, Seal, Hppr, Top, 2-5
Retainer, Skirt, 3-31, 3-35
Retainer, Skirt, .12, 1.0w X 08.1l, Pl, 2-5, 2-9
Retainer, Skirt, .12, 1.0w X 10.4l, Pl, 2-5
Retainer, Skirt, .12, 1.0w X 19.3l, Pl, 2-7
Retainer, Skirt, Lh Side, 3-33, 3-37
Ring, Retaining, 4-5, 4-6
Ring, Retaining, Ext, 0.38d, [Klipring], 2-41
Ring, Retaining, Ext, 0.50d, Hd, 2-21
Ring, Retaining, Ext, 0.98d, [E-Ring], 2-49
Ring, Retaining, Ext, 0.98d, Basic, 2-37
Ring, Retaining, Int, 1.63d, 2-27
Ring, Retaining, Int, 2.00d, 2-49
Ring, Steering, 2-29
Rivet, Blind, .187d X 0.53 X .62d, Alm, 3-61
Rivet, Plstc, .250d X 0.90, 2-5, 3-67
Rod Wldt, Damper, 2-45
Rod Wldt, Safety, Hppr Cover, 2-53
Rod-End, 0.75-16rh Mal 0.75b [Teflon], 2-27
Rod, Latch, Tilt, Steering, 2-21
Rod, Thrd, 2 End, .25-28 16.00l, 2-25
Rod, Thrd, 2 End, M06 X 1.0 02.2l, 2-23

S

Sbdc Kit, W/ Lh Side Brush, Ci [S20], 3-35, 3-37
Sbdc Kit, W/O Lh Side Brush, Ci [S20], 3-31, 3-33
Screen, Fltr, 60 Micron, Caged Ss, 3-49
Screen, Pump, 3-49
Screw, 4-3
Screw, Btn, M8 X 1.25 X 16, Ss, 2-11, 2-13, 2-49
Screw, Flt, M12 X 1.75 X 80, 10.9, 2-37
Screw, Flt, Soc, .50-13 X 2.50, Al, 2-43, 3-25
Screw, Flt, Soc, M10 X 1.50 X 25, Ss, 2-37
Screw, Flt, Soc, M6 X 1.00 X 25, 10.9, 2-51
Screw, Flt, Soc, M8 X 1.25 X 16, 10.9, 2-35
Screw, Flt, Soc, M8 X 1.25 X 20, 18-8,Ss, 2-57
Screw, Hex, .25-20 X 0.50, G5, 2-71
Screw, Hex, .25-20 X 0.75, Sems, 2-15
Screw, Hex, .25-20 X 1.00, G5, 3-17
Screw, Hex, .31-12 X 1.50, Fmg [Ab], 2-43, 3-25
Screw, Hex, .31-18 X 0.62, G5, 2-11
Screw, Hex, .31-18 X 0.75, G5, 3-11, 3-13
Screw, Hex, .31-18 X 2.25, G5, 2-15
Screw, Hex, .38-16 X 0.75, G5, 2-21
Screw, Hex, .38-16 X 1.00, Nl, 2-67
Screw, Hex, .38-16 X 1.25, Nl, 2-43, 3-25
Screw, Hex, .38-16 X 1.50, Fl, 2-23
Screw, Hex, .38-16 X 1.50, G5, 2-37

Screw, Hex, .38-16 X 2.00, G5, 2-39
Screw, Hex, .50-13 X 0.75, G5, 3-3, 3-5, 3-7, 3-9
Screw, Hex, .50-13 X 2.50, G5, 2-15
Screw, Hex, .75-10 X 3.00, G5, 2-27
Screw, Hex, 06-20 X 0.50, Fmg/Ab, Pl, 2-47
Screw, Hex, 06-32 X 0.75, Fmg, Pl, 2-71
Screw, Hex, M10 X 1.50 X 100, 8.8, 2-49
Screw, Hex, M10 X 1.50 X 20, 8.8, 2-59, 2-69, 3-20, 3-27
Screw, Hex, M10 X 1.50 X 20, Ss, 2-35
Screw, Hex, M10 X 1.50 X 25, 8.8, 2-39, 3-19, 3-43
Screw, Hex, M10 X 1.50 X 25, Ss, 2-43, 2-49
Screw, Hex, M10 X 1.50 X 30, Ss, 2-51
Screw, Hex, M10 X 1.50 X 35, 9.8, Sems, 2-39, 2-47, 2-51, 2-55, 2-71, 3-21, 3-25, 3-49
Screw, Hex, M10 X 1.50 X 60, 8.8, 2-23
Screw, Hex, M10 X 1.50 X 70, Fl, Ss, 2-37
Screw, Hex, M12 X 1.75 X 120, 8.8, 2-49
Screw, Hex, M12 X 1.75 X 30, 8.8, 2-29, 2-31, 3-11, 3-13
Screw, Hex, M12 X 1.75 X 35, 8.8, 2-25, 3-68
Screw, Hex, M12 X 1.75 X 40, 8.8, 2-5
Screw, Hex, M16 X 2.00 X 20, 8.8, 2-37
Screw, Hex, M16 X 2.00 X 90, 8.8, 2-43, 3-25
Screw, Hex, M4 X 0.70 X 20, Fmg, 2-17
Screw, Hex, M5 X 0.80 X 10, Fmg, 2-11, 2-13
Screw, Hex, M5 X 0.80 X 16, 8.8, 2-57
Screw, Hex, M5 X 1.0 X 16, Blk, 2-25
Screw, Hex, M6 X 1.00 X 10, 8.8, 3-23
Screw, Hex, M6 X 1.00 X 12, 8.8, 2-15, 2-25
Screw, Hex, M6 X 1.00 X 12, Fmg, 2-39, 2-47, 2-57, 2-59, 2-71, 3-17
Screw, Hex, M6 X 1.00 X 16, 8.8, 3-17
Screw, Hex, M6 X 1.00 X 16, Fmg, 2-51, 3-11, 3-13, 3-15
Screw, Hex, M6 X 1.00 X 16, Nl, Ss, 2-11, 2-13
Screw, Hex, M6 X 1.00 X 20, 8.8, 2-23, 2-45, 2-47, 3-11, 3-13, 3-61
Screw, Hex, M6 X 1.00 X 20, 9.8, Sems, 2-19, 3-31, 3-35
Screw, Hex, M6 X 1.00 X 20, Fmg, 2-49, 2-57, 3-31, 3-35
Screw, Hex, M6 X 1.00 X 20, Ss, 3-39
Screw, Hex, M6 X 1.00 X 25, 9.8 Sems, 2-21, 2-37, 2-57
Screw, Hex, M6 X 1.00 X 25, 9.8, Sems, 2-17, 2-45, 2-53
Screw, Hex, M6 X 1.00 X 30, 9.8, Sems, 3-49
Screw, Hex, M6 X 1.00 X 35, 8.8, 3-43, 3-46, 3-47
Screw, Hex, M6 X 1.00 X 50, 8.8, 2-25, 2-68, 3-3, 3-5, 3-7, 3-9
Screw, Hex, M8 X 1.25 X 16, 8.8, 2-11, 2-53, 2-59, 2-61
Screw, Hex, M8 X 1.25 X 16, Nl, Ss, 2-9, 2-51
Screw, Hex, M8 X 1.25 X 16, Ss, 2-15, 2-17, 2-57
Screw, Hex, M8 X 1.25 X 160, 8.8, 2-31
Screw, Hex, M8 X 1.25 X 20, 8.8, 2-71
Screw, Hex, M8 X 1.25 X 20, Fmg, 3-11, 3-13, 3-15, 3-17, 3-53, 3-55
Screw, Hex, M8 X 1.25 X 20, Nl, Ss, 2-37
Screw, Hex, M8 X 1.25 X 20, Ss, 2-5, 2-36, 3-31, 3-35
Screw, Hex, M8 X 1.25 X 20, Ss, Sems, 2-7, 2-25, 2-49, 2-71, 3-7, 3-9, 3-65
Screw, Hex, M8 X 1.25 X 25, 8.8, 2-5, 2-71, 3-33, 3-37
Screw, Hex, M8 X 1.25 X 25, 9.8, Sems, 2-5, 2-9, 2-11, 2-13, 2-15, 2-17, 2-19, 2-23, 2-53, 2-57, 2-59, 2-61, 2-71, 3-3, 3-5, 3-7, 3-9, 3-15, 3-23, 3-31, 3-33, 3-35, 3-37, 3-49, 3-53, 3-55, 3-63
Screw, Hex, M8 X 1.25 X 25, Ss, 2-43, 3-25
Screw, Hex, M8 X 1.25 X 30, 8.8, 2-41, 2-61, 3-23
Screw, Hex, M8 X 1.25 X 30, 9.8, Sems, 2-5, 2-19, 2-33, 2-35, 2-39, 2-45, 2-51, 2-57, 2-67, 3-11, 3-13, 3-33, 3-37, 3-65
Screw, Hex, M8 X 1.25 X 35, 8.8, 2-11, 2-13, 2-35, 3-23
Screw, Hex, M8 X 1.25 X 35, 9.8, Sems, 2-25, 2-49, 2-51, 2-59, 3-17, 3-31
Screw, Hex, M8 X 1.25 X 40, 8.8, 3-19
Screw, Hex, M8 X 1.25 X 40, 8.8, Fl, 2-55
Screw, Hex, M8 X 1.25 X 40, Ss, 2-57
Screw, Hex, M8 X 1.25 X 45, 10.9, 2-29
Screw, Hex, M8 X 1.25 X 45, 8.8, 2-33
Screw, Hex, M8 X 1.25 X 50, 8.8, 2-29
Screw, Hex, M8 X 1.25 X 60, 8.8, 2-41, 2-49
Screw, Hex, M8 X 1.25 X 80, 8.8, 2-29
Screw, Pan, 06- X 0.38, F/ Plstc, 2-61
Screw, Pan, 12-16 X 0.50, F/ Plstc, 2-11, 2-13, 2-61, 3-39, 3-40
Screw, Pan, Phl, .31-18 X 1.50, G2, 2-13
Screw, Pan, Phl, 06-32 X 1.00, G1, 2-45
Screw, Pan, Phl, 08-16 X 1.00, F/ Plstc, 2-51
Screw, Pan, Phl, 08-32 X 0.38, G1, 2-45
Screw, Pan, Phl, 10-14 X 0.75, F/ Plstc, 2-59
Screw, Pan, Phl, 10-16 X 0.75, Fmg/Ab, 3-40
Screw, Pan, Phl, 10-32 X 0.50, G2, Blk, 2-19
Screw, Pan, Phl, 12-16 X 0.50, F/ Plstc, 3-45
Screw, Pan, Phl, M3 X 0.5 X 25, Blk, 2-19
Screw, Pan, Phl, M4 X 0.70 X 10, Blk, 3-57
Screw, Pan, Phl, M4 X 0.70 X 10, Ss, 2-61, 3-63
Screw, Pan, Phl, M4 X 0.70 X 16, 4.8, 2-57, 3-15
Screw, Pan, Phl, M4 X 0.70 X 16, Ss, 2-61
Screw, Pan, Phl, M4 X 0.70 X 30, 4.8, 3-49
Screw, Pan, Phl, M5 X 0.80 X 12, Ss, 2-19, 2-51, 2-53, 3-3, 3-5, 3-7, 3-9
Screw, Pan, Phl, M5 X 0.80 X 16, 4.8, 3-3, 3-5, 3-7, 3-9
Screw, Pan, Phl, M5 X 0.80 X 25, 4.8, 3-17, 3-45
Screw, Pan, Phl, M6 X 1.00 X 10, Ss, 2-49
Screw, Pan, Phl, M6 X 1.00 X 40, Ss, 3-23
Screw, Pan, Phl, M6 X 1.00 X 60, Zn, 3-51
Screw, Set, .25-20 X 0.31, Nl, 2-39
Screw, Set, Soc, .25-20 X 0.75, Al, 2-47
Screw, Set, Soc, 10-24 X 0.38, Al, 2-61
Screw, Set, Soc, M5 X 0.80 X 8, Pl [45h], 2-23
Screw, Soc, .25-20 X 1.00, Al, 2-39
Screw, Soc, M8 X 1.25 X 25, 12.9, 2-23
Screw, Soc, M8 X 1.25 X 70, 12.9, 2-27
Seal, 1-1, 2-5, 2-7, 2-9, 2-57, 4-7
Seal Assy, Pre-Filter, 2-59
Seal Kit, 4-6
Seal Kit, Cartridge, 4-10, 4-11, 4-12
Seal Kit, Cyl, Hyd, 2-49
Seal Kit, Hsng, 4-9, 4-10, 4-11
Seal Kit, Motor, 2-31
Seal Kit, Motor [Cl], 2-43, 3-25
Seal Kit, Motor A/H-Stnd, 4-3
Seal Kit, Pump, Hyd, 2-39
Seal Kit, Valve, Hyd, 4-9, 4-10, 4-11, 4-12
Seal Kit, Vlv, 4-5
Seal, .19, .25w 39.2l, Adh, 3-15
Seal, Afmkt, Bulb, 90, 1.33 01ft, 2-11, 2-13
Seal, Afmkt, Bulb, Str, .75d F/07ga 08ft, 3-15
Seal, Afmkt, Bulb, Str, 0.50h .50w 1ft, 3-63
Seal, Afmkt, Bulb, Str, 0.50h .50w 3ft, 3-63
Seal, Afmkt, Bulb, Str, 0.58D 08Ft, 3-17
Seal, Bulb, 90, 0.50d .06-.09grip 022.5l, 2-11, 2-13
Seal, Bulb, Str, 0.50d .13grip 009.4l, 2-7
Seal, Cleanout Door, 2-61
Seal, Cover, 2-49
Seal, Door, Access, 2-51
Seal, Door, Dump, Side, 1-1
Seal, Firewall, 2-5
Seal, Foam, 2-59
Seal, Hppr, .06 12.5w 36.6l Neo, 1-1, 2-5
Seal, Inlet, Vacuum, 1-1, 2-45
Seal, Lip [76038ddur], 3-15
Seal, Org, 2-29
Seal, Org, .078 X 00.47id 06, 4-10

Seal, Org, .139 X 02.98id, 2-29
Seal, Rbr, .13 6.34w 36.3l, 12/.28h, Red, 1-1, 2-57
Seal, Rbr, 0.06, Tube, Vacuum Wand, 3-39
Seal, Rbr, Clsd, 0.13, Door, Dump, Side, 2-57
Seal, Rbr, Clsd, 0.38, Instmt Panl, 2-19
Seal, Rbr, Damper, 0.06th, 04.1d, 2-45
Seal, Rbr, Open, 0.38, 1.25w 25.5l, 2-7
Seal, Top, Lh, Sbdc, 3-31, 3-33, 3-35, 3-37
Seal, Top, Sbdc, 3-31, 3-33, 3-35, 3-37
Seal, Ure, 0.50, 0.75w 04.0l Adh, 2-47
Seat Kit, Dlx, Ci [S20], 3-19
Seat Kit, Replacement [S20], 2-11
Seat, Std [Milsco], 2-13
Seat, Suspension [Grammer Gs12], 3-19
Seatbelt Kit, Ci [6400], 3-20
Seatbelt, 60.0l, 3-19, 3-20
Sensor, Level, Liq, 14vdc 01a .62-11, 3-49
Sensor, Thermal, 140deg, No, Spst, 2-61
Shaft, 2-37
Shaft Assy, Brg, 2-47
Shaft Wldt, Brush, 2-25
Shaft, Idler, Plug, Brush, 2-37
Shaft, Impeller, 2-47
Shaft, Output, 4-3
Shaft, Pivot, Arm, Brush Drive, 2-37
Shaft, Pivot, Steering, 2-27
Sheave, 01grv, 01.9pd 0.62b [07m], 2-47
Sheave, 01grv, 04.7pd 0.97b [3v], 2-37
Sheave, 02grv, 05.6/2.9pd 2.0b [3v], 2-37
Sheave, 02grv, 06.5/3.7pd 1.50b [3v], 2-39
Sheave, Flat, 3.0d 0.75w 0.67brg, 2-37
Sheave, Step [3V/7M.877], 2-39
Shoe, Brake, 180 X 30mm, 2-25
Shroud, Rear [S20], 2-11, 2-13
Shroud, Rear, Trimmed, 2-11
Shunt, 050mv 250a, 3-45
Skirt, Brush, Side, Sbdc, 3-31, 3-35
Skirt, Brush, Side, Sbdc [W/O Lhsb], 3-31
Skirt, Front, Dual Sbdc, Rpd [S20], 3-37
Skirt, Front, Rh, Sbdc, Rpd [S20], 3-33, 3-37
Skirt, Front, Single Sbdc, Rpd [S20], 3-33
Skirt, Neo, .12 2ply, Dust-Cntrl, 1-1, 2-51
Skirt, Neo, .12, 05.20w 36.10l, 06/ Sl, 2-51
Skirt, Neo, .12, 12.26w 14.50l, 07/ Sl, 1-1, 2-5
Skirt, Sbdc, Sba, Lh, 3-35
Sleeve, 0.32b 0.50d 0.3l, 2cham, Ss, 2-41, 2-43, 3-23, 3-25
Sleeve, Nyl, 1.22id 35.0l, 2-21, 2-27
Sleeve, Nyl, 1.63id 25.0l, 2-43, 3-25
Sleeve, P/M, 0.25b 0.44d 0.2l, Pl, 2-45
Sleeve, P/M, 0.32b 0.50d 0.3l [430ss], 2-11, 2-13, 3-45
Sleeve, P/M, 0.32b 0.50d 0.5l [430ss], 2-35, 2-41, 3-23
Sleeve, P/M, 0.34b 0.63d 0.4l, Ss / Oil, 2-13, 2-33, 2-35
Sleeve, P/M, 1.25b 1.75d 0.7l [430ss], 2-49
Snap-Ring, 4-7, 4-8
Solenoid Assy, Pull, 36vdc, 2-45
Solenoid Kit, 36vdc, Replmt [Thrmsentry], 2-45
Solenoid, #10, 36vdc, 4-9, 4-10
Solenoid, #8, 36vdc, 4-10
Solenoid, 12vdc, Hyd [Sz08], 4-12
Solenoid, 12vdc, Hyd [Sz10], 4-11, 4-12
Solenoid, Cntrl, 4-10
Spacer, 2-27, 2-35, 4-5, 4-6
Spacer Plate, 4-3
Spacer, 0.56b 0.88d 1.82l, Pl, 2-57
Spacer, Fltr, 2-59
Spacer, Plstc, 0.41b 2.25d 1.30l, Nyl, 2-23
Spacer, Plywood, 3-43
Spindle, Adjustment, 2-11, 2-13
Spotlight, Blue, Ci [S20], 3-65
Spring, 4-5
Spring Kit, 4-6
Spring, Cmpr, 0.60od .07wir 00.8l, 2-9
Spring, Cmpr, 0.72od .06wir 02.3l, 2-21
Spring, Dsl, 1.00od 0.50id 1.25l, 2-43, 3-25
Spring, Dsl, 1.25od 0.62id 1.80l, 2-43, 3-25
Spring, Extn, 2-35
Spring, Extn, 0.38od 0.05wir 02.5l, 2-68
Spring, Extn, 0.75od 0.11wir 04.5l, 2-43, 3-25
Spring, Extn, 0.96od 0.05wir 01.4l, 2-45
Spring, Extn, 1.25od 0.15wir 06.0l, 2-47
Spring, Flat, .06, 0.75w X 01.8l, 2/.28h, 2-15
Spring, Flat, .06, 0.75w X 07.8l, 2-23
Spring, Tens, 2-57
Spring, Tors, 0.81id .12wir 08.0coil, 2-15
Spring, Tors, 1.03id .11wir 03.0coil, 2-41
Spring, Wir, 0.08d, Parking Brake, 2-25
Spring, Wir, 0.25d, Brake Return, 2-25
Stand-Off, Wir, M6, Insulator, Panel, 2-71
Steer-Control, Hyd04, 07.3 0600 (See Breakdowns), 2-21
Strainer, Hyd, 010gpm 100mesh, 1-1, 2-67
Strainrelief, 2-59
Strap Wldt, Tank, Hyd, 2-67
Strap, Rbr, 2-61, 3-63
Strap, Rbr, Tie-Down, 19.0l, 2/ Hook, 3-51
Strap, Static, W/Grommet, .19 1.1w 25.0l, 2-5
Strip Wldt, Seal, Door, 2-57
Strip, Rbr, Short, 3-63
Strip, Retainer, 2-57
Strip, Retainer, Dump Door, 2-57
Strip, Retainer, Flap, 2-5
Strip, Retainer, Front, Sbdc, 3-33, 3-37
Strip, Retainer, Hppr Lip, 2-51
Strip, Retainer, Skirt, Sbdc, 3-33, 3-37
Stud, M8 X 1.25 [55.0], 2-61
Stud, Spcl, 2-37
Support Wldt, Rh, Sbdc, 3-31, 3-35
Support Wldt, Lh, Sbdc, 3-35
Support, Hppr, Lip, Back, 2-55
Support, Hppr, Lip, Front, 2-55
Support, Hppr, Lip, Side, 2-55
Switch Assy, Press, No/Nc 0040Psi, 2-67
Switch, Ignition [Ku], 2-19
Switch, Press, 2-57
Switch, Push, Spst, No, 2-45
Switch, Rocker, 3 Position, 2-19
Switch, Rocker, Spst, Round, 3-57
Switch, Safety, Shutoff, 2-19
Switch, Seat, 3-19
Switch, Seat, No [Delta 6440-04], 2-11, 2-13
Switch, Snap, 15a No, 2-25
Switch, Snap, 15a No, Rlr, 2-57
Switch, Snap, 25a Spdt, 2-19
Switch, Temp, Sealed, Nc, 2-61

T

Taillight, 12vdc, Led, 3.6 X 1.9, 2-5
Tank, Detgt, Trimmed [S20], 3-49
Tape, Hook, 1.0w [Velcro], 3-15, 3-17
Terminal, Fem, Mp280, Sealed, 18-16ga, 3-57
Terminal, Qf, .25 16-14ga, Blu, F-Ins, 3-3, 3-5, 3-7, 3-9
Throttle, Electronic, 0000/5000 Ohm, 2-23
Thrust Bearing, 4-3
Tie, Cable, 11.3l, 2.75d Max, 3-65
Tie, Cable, Nyl, 07.3l .19w 1.8 Max D, 2-43, 2-51, 2-71, 3-25, 3-45
Tie, Cable, Nyl, 11.4l .19w 3.0 Max D, 2-19, 2-21, 2-27
Tie, Cable, Nyl, 14.5l .30w 4.0 Max D, 2-5, 3-46, 3-47
Timer, 36vdc, 10a [Left Hand Side Brush], 3-23
Tire Assy, Idler, 16.0 X 3.5, Rubber, 2-25
Tire Assy, Solid, 12.0 X 5.5, Blk, 2-31
Tire, Drive, Swpr, Blk, 16.0x4.0, 2-29
Tire, Drive, Swpr, Grey, 16.0x4.0 (Optional non-Marking), 2-29
Track, Locking, 12.5l, No Stud W/Handle, 2-13
Track, N-Lkg, Seat, 12.5l, No Stud, 2-13
Track, Slide, Seat Adj, 12.5l, 2-11
Track, Slide, Seat Adj, 12.5l, W/ Latch, 2-11
Tray Wldt, Dust [Cyclone], 2-59
Tray, Dust, Shakr, 2-59
Tray, Mold, 2-59
Tread, Non-Skid, 01.4w 12.0l, 2-23
Tread, Non-Skid, 02.2w 15.5l, 2-23
Tread, Non-Skid, 06.5w 20.6l, 2-23
Tube Wldt, Torque, 2-36
Tube, 0.33id 0.51od 00.8l, Stl, Pl, 3-23
Tube, 0.34id 0.62od 00.2l, Stl, 2-25
Tube, 0.38id 0.75od 00.9l, Stl, 2-57
Tube, 0.38id 0.81od 00.4l, Stl, 2-47
Tube, 0.42id 0.62od 01.0l, Stl, Pl, 2-41
Tube, 0.77id 1.13od 00.6l, Stl, Pl, 2-27

Tube, Transition, Valve, Ev, 2-45

V

Valve, Check, 4-9, 4-10, 4-11, 4-12
Valve, Check, 0005psi Bm06/Bm06, 3-53, 3-55
Valve, Cntrl, Logic, 4-9, 4-10, 4-11
Valve, Hyd Control Man, 4-5
Valve, Hyd, Mnl, 2spool 0100psi 10gpm (See Breakdowns), 2-68
Valve, Hyd, Solenoid, 36vdc, 4-9, 4-10
Valve, Hyd, Solenoid, 36Vdc (See Breakdowns), 2-69, 3-27
Valve, Hyd, Solenoid, 36vdc [1045994], 4-12
Valve, Hyd, Solenoid, 36vdc [1046688], 4-11
Valve, Hydraulic Steering 07.3 0600, 4-6
Valve, Relief, 4-9, 4-10, 4-12
Valve, Shutoff, Bm04/Bm04, Pvc, 3-49
Valve, Stem, Hyd, 4-9, 4-10, 4-12
Valve, Stem, No, 4-11, 4-12

W

Wand Kit, Vacuum, Ci [S20], 3-39
Wand, Vacuum, W/ Label, JP [S20], 3-39
Wand, Vacuum, W/ Label, Na [S20], 3-39
Washer, 4-5
Washer Flat,0.50,Sae, 2-15, 2-23, 2-25, 2-43, 2-57, 3-3, 3-5, 3-7, 3-9, 3-11, 3-13, 3-25
Washer, Flat, 0.20b 0.50d .06, Alm, Blnd, 2-57
Washer, Flat, 0.25, Fendr, 2-57, 3-17
Washer, Flat, 0.25, Sae, 2-23, 2-45, 2-71, 3-3, 3-5, 3-7, 3-9, 3-23, 3-45, 3-51, 3-61
Washer, Flat, 0.25, Std, 2-11, 2-13, 2-23, 2-45, 2-51, 2-57, 2-67, 2-71, 3-19, 3-23, 3-31, 3-35, 3-39
Washer, Flat, 0.25b 0.56d .05, Pl, 10, 3-11, 3-13, 3-49
Washer, Flat, 0.25b 1.12d .12, Ss, 3-51
Washer, Flat, 0.31, Fendr, 2-5, 2-9, 2-49, 2-51, 2-59, 3-17, 3-31, 3-33, 3-35, 3-37
Washer, Flat, 0.31, Sae, 2-7, 2-9
Washer, Flat, 0.31, Std, 2-5, 2-11, 2-13, 2-15, 2-17, 2-25, 2-33, 2-35, 2-37, 2-41, 2-51, 2-53, 2-55, 2-57, 2-59, 2-61, 2-68, 3-3, 3-5, 3-7, 3-9, 3-11, 3-13, 3-23, 3-49, 3-65
Washer, Flat, 0.31b 0.88d .12, Rbr, 2-68
Washer, Flat, 0.32b 1.00d .12, Ss, 2-61
Washer, Flat, 0.34b 0.69d .06, Nyl, 2-15
Washer, Flat, 0.38, Sae, 2-23, 2-37, 2-39, 2-67, 3-17
Washer, Flat, 0.38, Std, 2-35, 2-39, 2-41, 2-43, 2-47, 2-49, 2-51, 2-57, 2-59, 2-69, 3-25, 3-27, 3-43
Washer, Flat, 0.38b 0.88d .08, Ss, 2-43, 3-25
Washer, Flat, 0.39b 0.75d .06, Nyl, 2-23
Washer, Flat, 0.40b 1.12d .12, Ss, 2-51, 2-57
Washer, Flat, 0.44, Std, 2-41
Washer, Flat, 0.53b 1.06d .10, Stl, Pl, 3-68
Washer, Flat, 0.53b 1.75d .12, Stl, Pl, 2-37
Washer, Flat, 0.62, Sae, 2-43, 3-25
Washer, Flat, 0.75, Sae, 2-27, 2-37
Washer, Flat, 0.76b 1.50d .06, Ss, 2-25
Washer, Flat, 08, 2-45
Washer, Flat, 1.02b 1.75d .12, Stl, 2-49
Washer, Flat, 10, 2-19, 2-25, 2-51, 2-59, 3-3, 3-5, 3-7, 3-9
Washer, Flat, Belleville, .31, 3-17
Washer, Flat, Belleville, .38, 2-39
Washer, Flat, Belleville, .50, 2-49
Washer, Flat, M21.0b X 37d X 3, 2-25
Washer, Lock, Int-Ext, 0.25, 2-59
Washer, Lock, Int-Ext, 0.31, 2-5
Washer, Lock, Int-Ext, 0.50, 3-65
Washer, Lock, Int, 0.25, 2-71
Washer, Lock, Int, 0.31, 2-29, 2-31, 2-45, 2-71, 3-11, 3-13
Washer, Lock, Int, 0.38, 3-45
Washer, Lock, Int, 04, 2-19
Washer, Lock, Int, 10, 2-5, 3-45
Washer, Lock, Int, 10, Ss, 2-45, 2-61
Washer, Sealing, M8, 2-33
Washer, Thrust, 0.53b 1.00d 0.03w[Fbrgl], 2-43, 3-25
Washer, Thrust, 0.61b 1.25d .06, Fgl, 2-43, 3-25
Washer, Wavy, 0.53b 0.81d .09, 2-37
Wavy Washer, 4-7, 4-8
Weight, Eccentric, Pntd, 2-61
Wheel, Steering, 14.0D 0.81B 36Tooth, 2-21