T500e

Walk-Behind Floor Scrubber

Parts Manual

(S/N 10000000 -)

Tennant*True*® Parts
***IRIS*® a Tennant Technology**
***Insta-Fit*™ Adapter**
***Smart-Fill*™ Automatic Battery Watering**

Powered by LITHIUM-ION

ec H2O® NanoClean

North America / International

For the latest Parts manuals and other language Operator manuals, visit:

www.tennantco.com/manuals

4195232
Rev. 11 (12-2025)

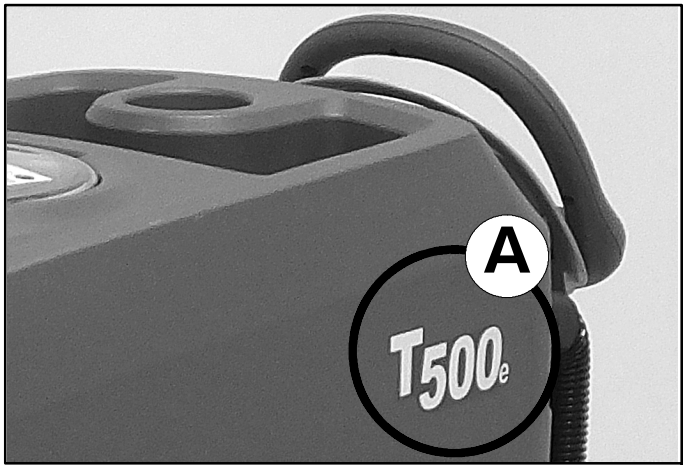

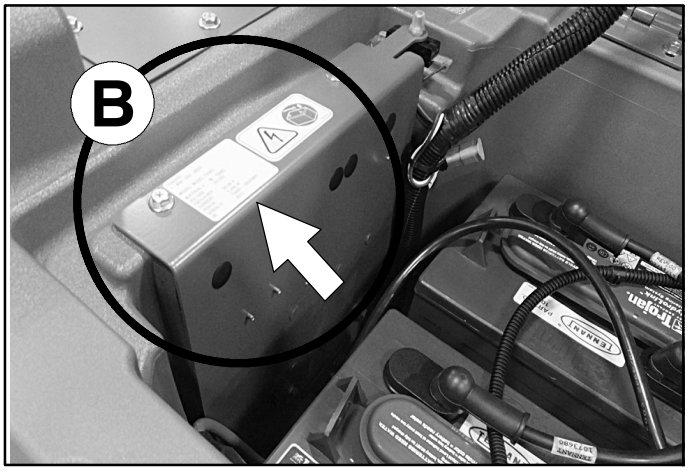

Ref	Part No.	Serial Number	Description	Qty.
1	82681	(000000-)	Bracket Wldt, Lpg Mount	1
▽ 2	63810	(000000-)	Latch Assy, Lpg Tank Mtg, W/Nut	4
▲ 3	51839	(000000-)	Nut Adjustable, Lpg Tank Mtg	2
4	49263	(000000-)	Tie, Cable	3
	82556	(000000- 001039)	Bracket, Vaporizer	1
	54930	(000000-)	Vaporizer, LPG	1

D

C

HOW TO ORDER PARTS - See diagram above

Only use TENNANT Company supplied or equivalent parts. Parts and supplies may be ordered online, by phone, by fax or by mail.

Follow the steps below to ensure prompt delivery.

1. **(A)** Identify the machine model.
2. **(B)** Identify the machine serial number from the data label.
3. **(C)** Ensure the proper serial number is used from the parts list.
4. Identify the part number and quantity. Do not order by page or reference numbers.
5. Provide your name, company name, customer ID number, billing and shipping address, phone number and purchase order number.
6. Provide detail shipping instructions.

(D) ▽ - identifies an assembly
▲ - identifies parts included in assembly

Please fill out at time of installation for future reference.

Model No. - _____

Serial No. - _____

Machine Options - _____

Sales Rep. - _____

Sales Rep. phone no. - _____

Customer ID Number - _____

Installation Date - _____

Tennant Company
10400 Clean Street
Eden Prairie, MN 55344-2650 USA
Phone: (800) 553-8033
www.tennantco.com

Specifications and parts are subject to change without notice.

Copyright © 2025 TENNANT Company, Printed in U.S.A.

ES

CÓMO SOLICITAR PIEZAS - Consulte el diagrama anterior.

Utilice sólo las piezas suministradas por TENNANT Company o piezas equivalentes. Puede solicitar las piezas a través de internet, por teléfono, por fax o por correo.

Siga los siguientes pasos para que la entrega sea rápida.

1. **(A)** Indique el modelo de máquina.
2. **(B)** Indique el número de serie de la etiqueta de datos.
3. **(C)** Asegúrese de que indica el número de serie correcto de la lista de piezas.
4. Indique la cantidad y el número de la pieza.
   No realice el pedidoindicando el número de página o el de referencia.
5. Incluya su nombre, el nombre de la empresa, el ID de cliente, las direcciones de envío y facturación, el número de teléfono y el número del pedido de compra.
6. Facilite instrucciones de envío.

(D) ▽ - identifica un conjunto
▲ - identifica piezas de un conjunto

Rellene estos datos cuando realice la instalación para utilizarlos como referencia en el futuro.

Nº modelo - _____

Nº serie - _____

Opciones de la máquina - _____

Vendedor - _____

Nº teléfono vendedor - _____

Nº cliente - _____

Fecha de instalación - _____

FR

COMMENT COMMANDER DES PIÈCES DÉTACHÉES - Voir le schéma ci- dessus.

Utilisez uniquement des pièces fournies par la société TENNANT ou équivalentes. Les pièces et fournitures peuvent être commandées en ligne, par téléphone, fax, ou par courrier.

Suivez les étapes ci- dessous pour assurer une livraison rapide.

1. **(A)** Identifiez le modèle de la machine.
2. **(B)** Identifiez le numéro de série de la machine, à partir de l'étiquette signalétique.
3. **(C)** Assurez- vous que le numéro de série correct est utilisé à partir de la liste de pièces détachées.
4. Identifiez le numéro de pièce et la quantité. Ne commandez pas par page ou numéros de référence.
5. Fournissez votre nom, le nom de votre société, votre numéro d'identification de client, l'adresse de facturation et d'expédition, le numéro de téléphone et le numéro du bon de commande.
6. Fournissez des instructions d'expédition détaillées.

(D) ▽ - identifie un assemblage
▲ - identifie les pièces composant l'assemblage

A remplir au moment de l'installation à titre de référence.

Nº du modèle - _____

Nº de série - _____

Options de la machine - _____

Agent commercial - _____

Nº tél. de l'agent commercial - _____

Numéro d'identification client - _____

Date d'installation - _____

STANDARD PARTS

GENERAL RECOMMENDED MAINTENANCE ITEMS 7
REPLACEMENT BRUSHES AND PAD DRIVER DISK 12
REPLACEMENT BRUSHES CYLINDRICAL 14
REPLACEMENT PADS ORBITAL 15
SCRUB HEAD GROUP, DISK 650MM / 26IN . . . 16
SCRUB HEAD GROUP, DISK 700MM / 28IN . . . 18
SCRUB HEAD GROUP, DISK 800MM / 32IN . . . 20
SCRUB HEAD GROUP, CYLINDRICAL 700MM / 28IN 22
SCRUB HEAD GROUP, CYLINDRICAL 700MM / 28IN - CONT'D 24
SCRUB HEAD GROUP, ORBITAL 700MM / 28IN 26
RECOVERY TANK GROUP, PINCH CUFF SCREW CAP 28
RECOVERY TANK GROUP, STANDARD SCREW CAP 30
SOLUTION TANK GROUP 32
ELECTRICAL GROUP, WET AND AGM BATTERY 34
ELECTRICAL GROUP, TPPL AND LITHIUM- ION BATTERY 36
FRAME AND DRIVE GROUP (S/N 11064202 -) 38
FRAME AND DRIVE GROUP (S/N 10000000 - 11064201) 40
HEAD LIFT GROUP, DISK 42
HEAD LIFT GROUP, CYLINDRICAL 44
HEAD LIFT GROUP, ORBITAL 46
LOWER CONSOLE GROUP, ON- BOARD CHARGER, WET AND AGM BATTERY 48
LOWER CONSOLE GROUP, ON- BOARD CHARGER, TPPL BATTERY 50
LOWER CONSOLE GROUP, ON- BOARD CHARGER 650W, LITHIUM- ION BATTERY . . 52
LOWER CONSOLE GROUP, OFF- BOARD CHARGER 54
CONSOLE GROUP, PROPEL 56
CONSOLE PANEL, MEMBRANE, WITHOUT TELEMETRY 58
SQUEEGEE LIFT GROUP 60
SQUEEGEE ASSEMBLY, 500MM / 20IN 62
SQUEEGEE ASSEMBLY, 650MM / 26IN (New Style 9021741) 64
SQUEEGEE ASSEMBLY, 650MM / 26IN (Original Style 9015301 - Replaced By 9021741) 66
SQUEEGEE ASSEMBLY, 700MM / 28IN (New Style 9021742) 68
SQUEEGEE ASSEMBLY, 700MM / 28IN (Original Style 9015302 - Replaced By 9021742) 70
SQUEEGEE ASSEMBLY, 800MM / 32IN (New Style 9021743) 72
SQUEEGEE ASSEMBLY, 800MM / 32IN (Original Style 9015303 - Replaced By 9021743) 74
STANDARD SOLUTION GROUP (NEW BARB CONNECTOR STYLE) (S/N 11089942 -) 76
STANDARD SOLUTION GROUP (PUSH QUICK CONNECTOR STYLE) (S/N 10000000 - 11089941) 78
BATTERY CABLES GROUP, WET AND AGM BATTERY 80
BATTERY CABLES GROUP, TPPL BATTERY . . 81
BATTERY CABLES GROUP, LITHIUM- ION BATTERY 82
LABEL GROUP 83
WIRE HARNESS GROUP 84

OPTIONS

BATTERY GROUP, WET 225AH 86
BATTERY GROUP, WET 260AH 87
BATTERY GROUP, AGM 210AH 88
BATTERY GROUP, TPPL 183AH C/20 89
BATTERY GROUP, 90AH 125 BAUD LITHIUM- ION (1 Battery System) 90
BATTERY GROUP, 90AH 125 BAUD LITHIUM- ION (2 Battery System) 91
EXTENSION KIT, LITHIUM- ION BATTERY (1 Battery to 2 Battery System) 92
MANUAL BATTERY WATERING SYSTEM 94
HYDROLINK MANUAL BATTERY WATERING SYSTEM 96
SMART-FILL AUTOMATIC BATTERY WATERING SYSTEM (S/N 10995399 -) 98
SMART-FILL AUTOMATIC BATTERY WATERING SYSTEM (S/N 10000000 - 10995398) 100
CONSOLE PANEL, MEMBRANE, WITH TELEMETRY (S/N 11101079 -) 102
CONSOLE PANEL, MEMBRANE, WITH TELEMETRY (S/N 10000000 - 11101078) 104
ELECTRICAL GROUP, TELEMETRY (S/N 10000000 - 11101078) 106
BATTERY CABLES GROUP, TELEMETRY, AGM AND WET (S/N 10000000 - 11101078) 108
PINCH CUFF SCREW CAP DRAIN HOSE GROUP 110
CONTROL VALVE DRAIN HOSE GROUP 112
ec-H2O SOLUTION GROUP (NEW BARB CONNECTOR STYLE) (S/N 11089942 -) 114
ec-H2O SOLUTION GROUP (PUSH QUICK CONNECTOR STYLE) (S/N 10000000 - 11089941) 116
PARKING BRAKE GROUP (S/N 11064202 -) 118
PARKING BRAKE GROUP (S/N 10000000 - 11064201) 120
BRACKET KIT, SOLUTION TANK SUPPORT (S/N 10000000 - 11064201) 122
DOCUMENTATION GROUP (ONLINE ONLY) . . . 124

BREAKDOWNS

AUTOMATIC BATTERY WATERING MODULE BREAKDOWN 125
ec- H2O NANOCLEAN MODULE BREAKDOWN 9020643, 9021553 (S/N 10983853 -) . . . 126
ec- H2O NANOCLEAN MODULE BREAKDOWN 9011810 (S/N 10000000 - 10983852) 128
ORBITAL HEAD ECCENTRIC DRIVE BREAKDOWN 130

GENERAL RECOMMENDED MAINTENANCE ITEMS

	Part No.	Serial Number	Description	Qty.
	1223989	( )	Brush Assy, Disk, Scb, 13.0d, Pyp	2
	1223991	( )	Brush Assy, Disk, Scb, 13.0d, Nyl	2
	1223990	( )	Brush Assy, Disk, Scb, 13.0d, Sab	2
	1243567	( )	Pad, Stripper, 13.0d, Brn [1pick=1ctn]	2
	1243655	( )	Pad, Scb, 13.0d Blu [1pick=1ctn]	2
	1243341	( )	Pad, Buff, 13.0d, Red [1pick=1ctn]	2
	1243342	( )	Pad, Polish, 13.0d, White [1pick=1ctn]	2
	1243666	( )	Pad, Surf Prep, 13.0d Maroon[1pick=1ctn]	2
	1240356	( )	Pad, Polish, 13.0d, Yel [1pick=1ctn]	2
	1220218	( )	Brush Assy, Disk, Scb, 14.0d, Pyp	2
	1221541	( )	Brush Assy, Disk, Scb, 14.0d, Nyl	2
	1220217	( )	Brush Assy, Disk, Scb, 14.0d, Sab	2
	1243657	( )	Pad, Stripping, 14.0d Brown [1pick=1ctn]	2
	1243344	( )	Pad, Scb, 14.0d, Blu [1pick=1ctn]	2
	1243656	( )	Pad, Buff, 14.0d Red [1pick=1ctn]	2
	1243343	( )	Pad, Polish, 14.0d, White [1pick=1ctn]	2
	1243658	( )	Pad, Strip, 14.0d Blk[Hi Prod1pick=1ctn]	2
	1243667	( )	Pad, Surf Prep, 14.0d Maroon[1pick=1ctn]	2
	1240389	( )	Pad, Polish, 14.0d, Yel [1pick=1ctn]	2
	1220216	( )	Brush Assy, Disk, Scb, 16.0d, Pyp	2
	1220215	( )	Brush Assy, Disk, Scb, 16.0d, Nyl	2
	1220214	( )	Brush Assy, Disk, Scb, 16.0d, Sab	2
	1243685	( )	Pad, Stripping, 16.0d, Brn [1pick=1ctn]	2
	1243354	( )	Pad, Scb, 16.0d, Blu [1pick=1ctn]	2
	1243355	( )	Pad, Buff, 16.0d, Red [1pick=1ctn]	2
	1243356	( )	Pad, Polish, 16.0d, White [1pick=1ctn]	2
	1243659	( )	Pad, Strip, 16.0d Blk[Hi Prod1pick=1ctn]	2
	1243668	( )	Pad, Surf Prep, 16.0d Maroon[1pick=1ctn]	2
	1240390	( )	Pad, Polish, 16.0d, Yel [1pick=1ctn]	2
	222304	( )	Brush, Scb, 28l, 18sr, Pyp, Spl	2
	222305	( )	Brush, Scb, 28l, 18sr, Nyl, Spl	2
	222306	( )	Brush, Scb, 28l, 18sr, Abr, Spl	2
	1223247	( )	Pad, Scb, 28 X 14, Blu [1pc=1pad]	1
	1244690	( )	Pad, Buff, 28 X 14, Red [1pick=1ctn]	1
	1223246	( )	Pad, Polish, 28 X 14, White [1pc=1pad]	1
	1223248	( )	Pad, Surf Prep, 28 X 14, Mar [1pc=1pad]	1
	1223250	( )	Pad, Scb, 28 X 14, Green [1pick=1ctn]	1
	1075563	( )	Pad, Stripping, 28 X 14, Blk [1pick=1ctn]	1
	1228002	( )	Pad, Melamine, 14” X 28” [Case Of 5]	1
	1240343	( )	Pad, Polish, 28 X 14, Yel [1pick=1ctn]	1
	1221839	( )	Pad, Backer, 28 X 14 (Includes Velcro Fasteners)	1
∇	4211412	( )	Disk, Polish, 14.0d,1000grit[Diamabrush]	2
▲	8005762	( )	Vr, Blade, Disk, 1000grit [Db] Set Of 11	4
∇	4211413	( )	Disk, Polish, 14.0d,2000grit[Diamabrush]	2
▲	8046642	( )	Vr, Blade, Disk, 2000grit [Db] Set Of 11	4
∇	4211420	( )	Disk, Polish, 16.0d,1000grit[Diamabrush]	2
▲	8005762	( )	Vr, Blade, Disk, 1000grit [Db] Set Of 11	4
∇	4211421	( )	Disk, Polish, 16.0d,2000grit[Diamabrush]	2
▲	8046642	( )	Vr, Blade, Disk, 2000grit [Db] Set Of 11	4

GENERAL RECOMMENDED MAINTENANCE ITEMS

	Part No.	Serial Number	Description	Qty.
∇	9015731	( )	Blade Kit, 500mm, Linatex (Standard)	1
▲	1203953	( )	Blade, Sqge, Rear, 836l, Linatex[500mm] (Standard)	1
▲	1203954	( )	Blade, Sqge, Front, 788l, Linatex[500mm] (Standard)	1
∇	9015732	( )	Blade Kit, 500mm, Urethane (Option)	1
▲	1215609	( )	Blade, Sqge, Rear, 836l, Urethane[500mm] (Option)	1
▲	1215611	( )	Blade, Sqge, Front, 788l, Urethane[500mm (Option)	1
∇	9015730	( )	Blade Kit, 500mm, Gum (Option)	1
▲	1215610	( )	Blade, Sqge, Rear, 836l, Gum[500mm] (Option)	1
▲	1215612	( )	Blade, Sqge, Front, 788l, Gum[500mm] (Option)	1
∇	9015734	( )	Blade Kit, 650mm, Linatex/Linard (Standard)	1
▲	1221585	( )	Blade, Sqge, Rear, 1166l, Linatex[650mm] (Standard)	1
▲	1232680	( )	Blade, Sqge, Front, 1072l Linard[650mm] (Standard)	1
∇	9015735	( )	Blade Kit, 650mm, Urethane (Option)	1
▲	1228909	( )	Blade, Sqge, Rear, 1136l,Urethane[650mm] (Option)	1
▲	1228915	( )	Blade, Sqge, Front,1072l,Urethane[650mm] (Option)	1
∇	9015733	( )	Blade Kit, 650mm, Gum (Option)	1
▲	1228910	( )	Blade, Sqge, Rear, 1136l, Gum[650mm] (Option)	1
▲	1228919	( )	Blade, Sqge, Front, 1072l Gum[650mm] (Option)	1
∇	9015737	( )	Blade Kit, 700mm, Linatex/Linard (Standard)	1
▲	1221572	( )	Blade, Sqge, Rear, 1204l, Linatex[700mm] (Standard)	1
▲	1232679	( )	Blade, Sqge, Front, 1148l Linard[700mm] (Standard)	1
∇	9015738	( )	Blade Kit, 700mm, Urethane (Option)	1
▲	1228904	( )	Blade, Sqge, Rear, 1204l,Urethane[700mm] (Option)	1
▲	1228906	( )	Blade, Sqge, Front,1148l Urethane[700mm] (Option)	1
∇	9015736	( )	Blade Kit, 700mm, Gum (Option)	1
▲	1228905	( )	Blade, Sqge, Rear, 1204l, Gum[700mm] (Option)	1
▲	1228907	( )	Blade, Sqge, Front, 1148l Gum[700mm] (Option)	1
∇	9015740	( )	Blade Kit, 800mm, Linatex/Linard (Standard)	1
▲	1221115	( )	Blade, Sqge, Rear, 1306l, Linatex[800mm] (Standard)	1
▲	1232681	( )	Blade, Sqge, Front, 1256l Linard[800mm] (Standard)	1
∇	9015741	( )	Blade Kit, 800mm, Urethane (Option)	1
▲	1228920	( )	Blade, Sqge, Rear, 1306l,Urethane[800mm] (Option)	1
▲	1228922	( )	Blade, Sqge, Front,1256l Urethane[800mm] (Option)	1
∇	9015739	( )	Blade Kit, 800mm, Gum (Option)	1
▲	1228921	( )	Blade, Sqge, Rear, 1306l, Gum[800mm] (Option)	1
▲	1228923	( )	Blade, Sqge, Front, 1256l Gum[800mm] (Option)	1
	4029759	( )	Caster, Swivel, (Squeegee)	2
	1212422	( )	Caster, Swivel [Wicke 224051] (Frame)	2
	4037832	(11046266-)	Wheel, Scrbr, 8.00d, W/ Taper	2
	1223583	(10000000- 11046265)	Wheel, Scrbr, 213mm, W/ Taper	2
	222403	( )	Wheel, 02.0d 0.88w 0.50b (Disk Head)	2
	1232324	( )	Bumper, Head, 65cm, Skirt, Im	1
	1232325	( )	Bumper, Head, 70cm, Skirt, Im	1
	1232326	( )	Bumper, Head, 80cm, Skirt, Im	1
	630477	( )	Wheel, Pyu, 02.0d 0.38w, Gray (Cylindrical Head)	6
	1014918	( )	Wheel, 03.0d 0.88w 0.31b, W/ Bshg, Rbr (Orbital Head)	2
	1218573	( )	Skirt, Side, Scrb, Cyl [T500]	4
∇	9015765	( )	Belt Kit, Motor, Ci (Cylindrical Head)	1
▲	1035888	( )	Belt, Drive, 6grv, 508 L X 14 W, [6pj]	2
▲	1203758	( )	Tool, Installation, Belt	1

GENERAL RECOMMENDED MAINTENANCE ITEMS

	Part No.	Serial Number	Description	Qty.
∇	1261401	(11100184-)	Transaxle, Ele, 24vdc, 110rpm	1
▲	1261402	(11100184-)	Brush Set, Transaxle	1
∇	1031723	(10000000- 11100183)	Motor, Transaxle, 24vdc, Afmkt [T5]	1
▲	614166	(10000000- 11100183)	Brush Kit, Carbon, Transaxle, Replmt [4]	1
∇	1219312	( )	Fan, Vacuum, 5.7d, 024vdc, 2 Stage (Canada Also Require Qty 1 Ferrite #1065665)	1
▲	372883	( )	Vr, Brush Kit, Motor, Ele	1
	1065665	( )	Inductor, 32.3mml [Ferrite 10- 250mhz] (Canada Only)	1
	100038	( )	Gasket, .50, 02.63id 05.75od, Adh [Epdm]	1
	630052	( )	Float, Shut- Off, (2)Ball, 1.75d	1
	9015756	( )	Seal, Cover, Recvy, Ci [T500]	1
	1211220	( )	Hose Assy,W/2cuff,1.5d 022l 1.5/1.5[Pvc] (Black - Standard)	1
	1224414	(10000000- 10972171)	Hose Assy, W/2cuff,1.5d 033l 1.5/1.5[Pu] (Gray - Option) (NLA - Replaced by 1211220 - Black PVC)	1
∇	1248221	(10972172-)	Hose Assy, Drain, 1.5id X 11.0l [Pvc] (Black - Standard)	1
▲∇	1232385	(10972172-)	Cap, Drain Assy [Black, T500e]	1
▲▲	1008637	( )	Seal, Org, 1.48id 1.76od	1
∇	1228252	(10000000- 10972171)	Hose Assy, Drain, 1.5d 014l 2/1.5cap Pvc (Black - Standard) (Replaced by 1248221 - Pinch Cuff Screw Cap Style)	1
▲∇	1218955	(10000000- 10972171)	Cap, Drain Assy [Black]	1
▲▲	1008637	( )	Seal, Org, 1.48id 1.76od	1
	9015758	( )	Seal, Tank, Soltn, Ci [T500/T500e]	1
	1066431	( )	Seal, Afmkt, Bulb, Dual, 03ft [F/.30gap](Soltn Tank Front)	1
∇	1211537	( )	Filter, In- Line, Pf06/Pf06 080m 2.6l Epd	1
▲	1218885	( )	Gasket [Epdm, F/1211537]	1
▲	1218883	( )	Screen, Fltr, 80 Mesh, Ss [W/ Cage]	1
▲	613991	( )	Bowl, Clr, Short, F/1005302	1
	9021553	(SEP2022-)	Module Kit, Replmt [Ec- H2o, B 02] (Includes Cartridge)	1
	9020643	(10983853- AUG2022)	Module Kit, Replmt [Ec- H2o, B 02] (Includes Cartridge) (Replaced By 9021553)	1
	9011810	(10000000- 10983852)	Module Kit, Replmt [Ec- H2o, B 02] (Includes Cartridge) (Replaced By 9021553)	1
	9014127	( )	Controller Kit, Replmt [Ec- H2o Nc] (Includes Cartridge)	1
	9013646	( )	Cartridge, Ec- H2o Nanoclean Wcm, 270ml	1
∇	1247144	(10951746- 10972171)	Hose Assy, Drain, 1.5id X 21.0l [Pu] (Gray - Option) (No Longer Available - Replaced by 1248221 Black PVC)	1
▲∇	1247319	(10951746- 10972171)	Cap, Drain Assy, D- Ring [Gray] (No Longer Available - Replaced by 1248221 Black PVC)	1
▲▲	1008637	( )	Seal, Org, 1.48id 1.76od	1
∇	9015727	(10000000- 10951745)	Hose Kit, Drain, Pu, W/ Valve, Ci[T500e] (Gray - Option) (No Longer Available - Replaced by 1248221 Black PVC Pinch Cuff Screw Cap Style)	1
▲	1051986	(10000000- 10951745)	Valve, Ball, 2way, 1.0id Pvc, W/Handle (No Longer Available - Replaced by 1248221 Black PVC Pinch Cuff Screw Cap Style)	1
▲	1228335	(10000000- 10951745)	Hose Assy, W/2cuff,1.5d 022l 2.0/1.5[Pu] (Gray - Option)	1
▲	1229567	(10000000- 10951745)	Strap, Hanger	1

GENERAL RECOMMENDED MAINTENANCE ITEMS

	Part No.	Serial Number	Description	Qty.
∇	4032652	(11107624-)	Motor, Ele, 24vdc, 0230rpm (Canada Also Requires Qty 2 Ferrite #1227867)	2
∇	1023067	(10000000- 11107623)	Motor, Ele, 24vdc 0220rpm 0.75hp Gear (Replaced By 4032652 - Canada Also Requires Qty 2 Ferrite #1227867)	2
▲	1031775	( )	Brush Kit, Carbon, Motor, Replmt [T5] (Disk Head)	1
	1227867	( )	Inductor, Ferrite [Split Case,407@100hz] (Canada Only)	4
	1065665	( )	Inductor, 32.3mml [Ferrite 10- 250mhz] (Canada Only)	2
∇	1223429	( )	Motor, Ele, 24vdc 1500rpm 0.60hp (Cylindrical Head) (Canada Also Require Qty 1 Ferrite #1065665)	2
▲	1031775	( )	Brush Kit, Carbon, Motor, Replmt [T5] (Cylindrical Head)	1
	1065665	( )	Inductor, 32.3mml [Ferrite 10- 250mhz] (Canada Only)	2
∇	1219913	( )	Motor, Ele, 24vdc, 2200rpm, 0.75hp 28.0a (Orbital Head)	1
▲	1059370	( )	Brush, Motor, Replmt [Bag Of 4) (Orbital Head)	1

REPLACEMENT BRUSHES AND PAD DRIVER DISK

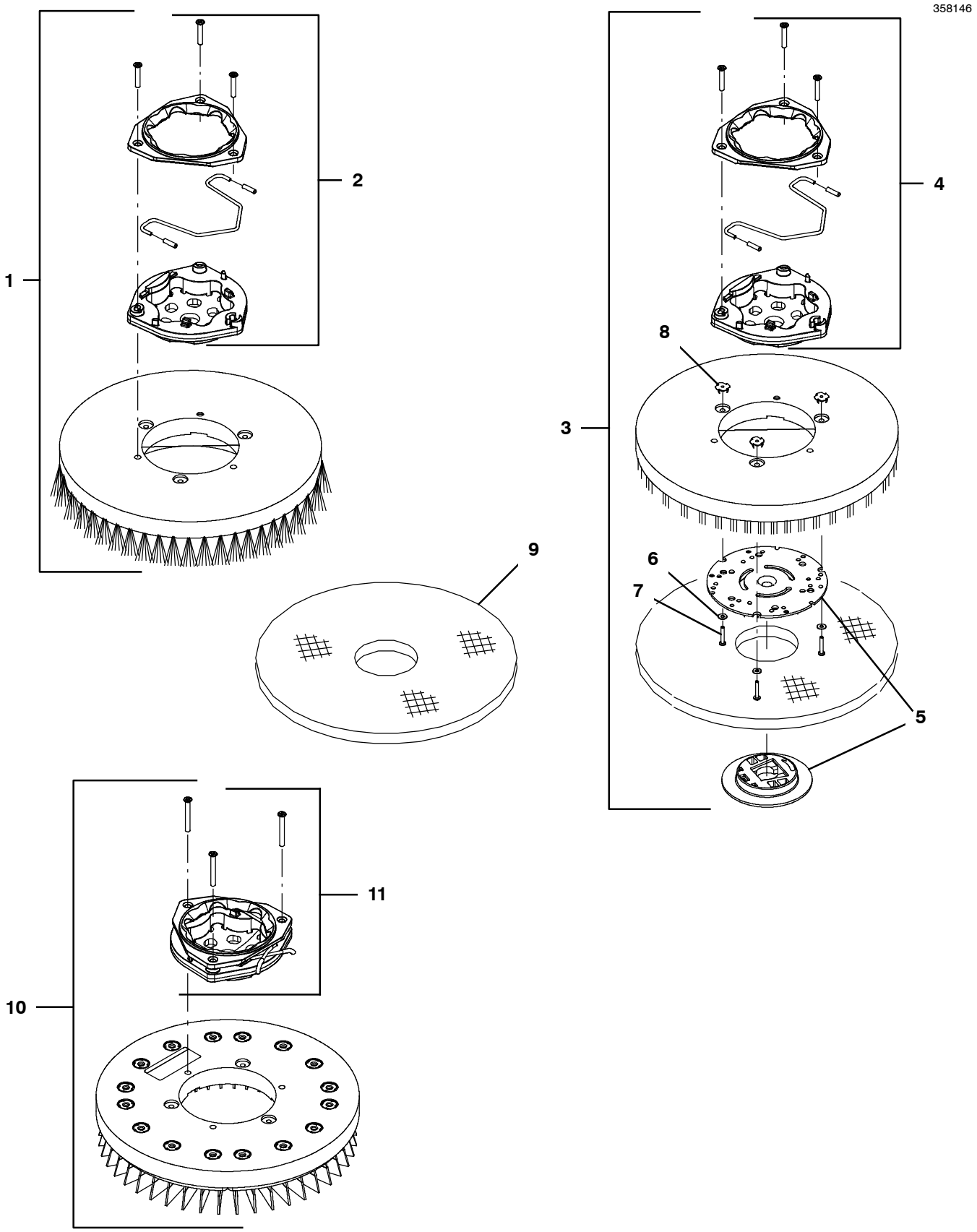

REPLACEMENT BRUSHES AND PAD DRIVER DISK

	Ref.	Part No.	Serial Number	Description	Qty.
∇	1	1223989	( )	Brush Assy, Disk, Scb, 13.0d, Pyp	2
∇	1	1223991	( )	Brush Assy, Disk, Scb, 13.0d, Nyl	2
∇	1	1223990	( )	Brush Assy, Disk, Scb, 13.0d, Sab	2
∇	1	1220218	( )	Brush Assy, Disk, Scb, 14.0d, Pyp	2
∇	1	1221541	( )	Brush Assy, Disk, Scb, 14.0d, Nyl	2
∇	1	1220217	( )	Brush Assy, Disk, Scb, 14.0d, Sab	2
∇	1	1220216	( )	Brush Assy, Disk, Scb, 16.0d, Pyp	2
∇	1	1220215	( )	Brush Assy, Disk, Scb, 16.0d, Nyl	2
∇	1	1220214	( )	Brush Assy, Disk, Scb, 16.0d, Sab	2
▲	2	9014667	( )	Brush Kit, Hub Assy, Drive, Ci [Comm]	1
∇	3	1220220	( )	Driver Assy, Pad, 13.0d, Brush	2
∇	3	1220221	( )	Driver Assy, Pad, 14.0d, Brush	2
∇	3	1220222	( )	Driver Assy, Pad, 16.0d, Brush	2
▲	4	9014667	( )	Brush Kit, Hub Assy, Drive, Ci [Comm]	1
▲	5	370095	( )	Device, Centering, Clip On, Tl [Gf Pp]	1
▲	6	41579	( )	Washer, Flat, 08, Ss	3
▲	7	04403	( )	Screw, Pan, Phl, M4 X 0.70 X 25, Nl, Ss	3
▲	8	10908	( )	Nut, T, M4 X 0.70	3
	9	1243567	( )	Pad, Stripper, 13.0d, Brn [1pick=1ctn]	2
	9	1243655	( )	Pad, Scb, 13.0d Blu [1pick=1ctn]	2
	9	1243341	( )	Pad, Buff, 13.0d, Red [1pick=1ctn]	2
	9	1243342	( )	Pad, Polish, 13.0d, White [1pick=1ctn]	2
	9	1243666	( )	Pad, Surf Prep, 13.0d Maroon[1pick=1ctn]	2
	9	1240356	( )	Pad, Polish, 13.0d, Yel [1pick=1ctn]	2
	9	1243657	( )	Pad, Stripping, 14.0d Brown [1pick=1ctn]	2
	9	1243344	( )	Pad, Scb, 14.0d, Blu [1pick=1ctn]	2
	9	1243656	( )	Pad, Buff, 14.0d Red [1pick=1ctn]	2
	9	1243343	( )	Pad, Polish, 14.0d, White [1pick=1ctn]	2
	9	1243658	( )	Pad, Strip, 14.0d Blk[Hi Prod1pick=1ctn]	2
	9	1243667	( )	Pad, Surf Prep, 14.0d Maroon[1pick=1ctn]	2
	9	1240389	( )	Pad, Polish, 14.0d, Yel [1pick=1ctn]	2
	9	1243685	( )	Pad, Stripping, 16.0d, Brn [1pick=1ctn]	2
	9	1243354	( )	Pad, Scb, 16.0d, Blu [1pick=1ctn]	2
	9	1243355	( )	Pad, Buff, 16.0d, Red [1pick=1ctn]	2
	9	1243356	( )	Pad, Polish, 16.0d, White [1pick=1ctn]	2
	9	1243659	( )	Pad, Strip, 16.0d Blk[Hi Prod1pick=1ctn]	2
	9	1243668	( )	Pad, Surf Prep, 16.0d Maroon[1pick=1ctn]	2
	9	1240390	( )	Pad, Polish, 16.0d, Yel [1pick=1ctn]	2
∇	10	4211412	( )	Disk, Polish, 14.0d,1000grit[Diamabrush]	2
▲		8005762	( )	Vr, Blade, Disk, 1000grit [Db] Set Of 11	4
▲	11	4022630	( )	Brush Kit, Hub Assy, Drive, Ci [Comm]	1
∇	10	4211413	( )	Disk, Polish, 14.0d,2000grit[Diamabrush]	2
▲		8046642	( )	Vr, Blade, Disk, 2000grit [Db] Set Of 11	4
▲	11	4022630	( )	Brush Kit, Hub Assy, Drive, Ci [Comm]	1
∇	10	4211420	( )	Disk, Polish, 16.0d,1000grit[Diamabrush]	2
▲		8005762	( )	Vr, Blade, Disk, 1000grit [Db] Set Of 11	4
▲	11	4022630	( )	Brush Kit, Hub Assy, Drive, Ci [Comm]	1
∇	10	4211421	( )	Disk, Polish, 16.0d,2000grit[Diamabrush]	2
▲		8046642	( )	Vr, Blade, Disk, 2000grit [Db] Set Of 11	4
▲	11	4022630	( )	Brush Kit, Hub Assy, Drive, Ci [Comm]	1

∇ ASSEMBLY

▲ INCLUDED IN ASSEMBLY

REPLACEMENT BRUSHES CYLINDRICAL

355427

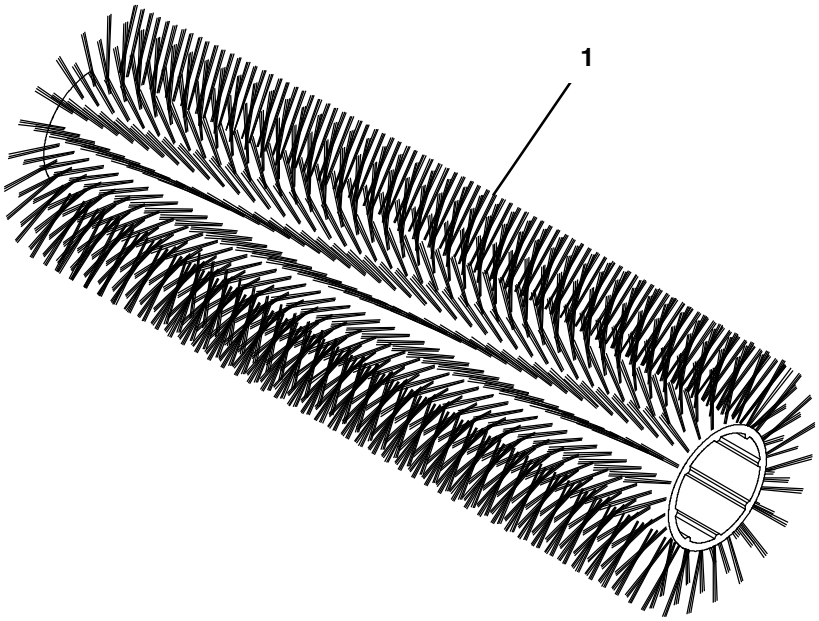

Ref.	Part No.	Serial Number	Description	Qty.
1	222304	( )	Brush, Scb, 28l, 18sr, Pyp, Spl	2
1	222305	( )	Brush, Scb, 28l, 18sr, Nyl, Spl	2
1	222306	( )	Brush, Scb, 28l, 18sr, Abr, Spl	2

REPLACEMENT PADS ORBITAL

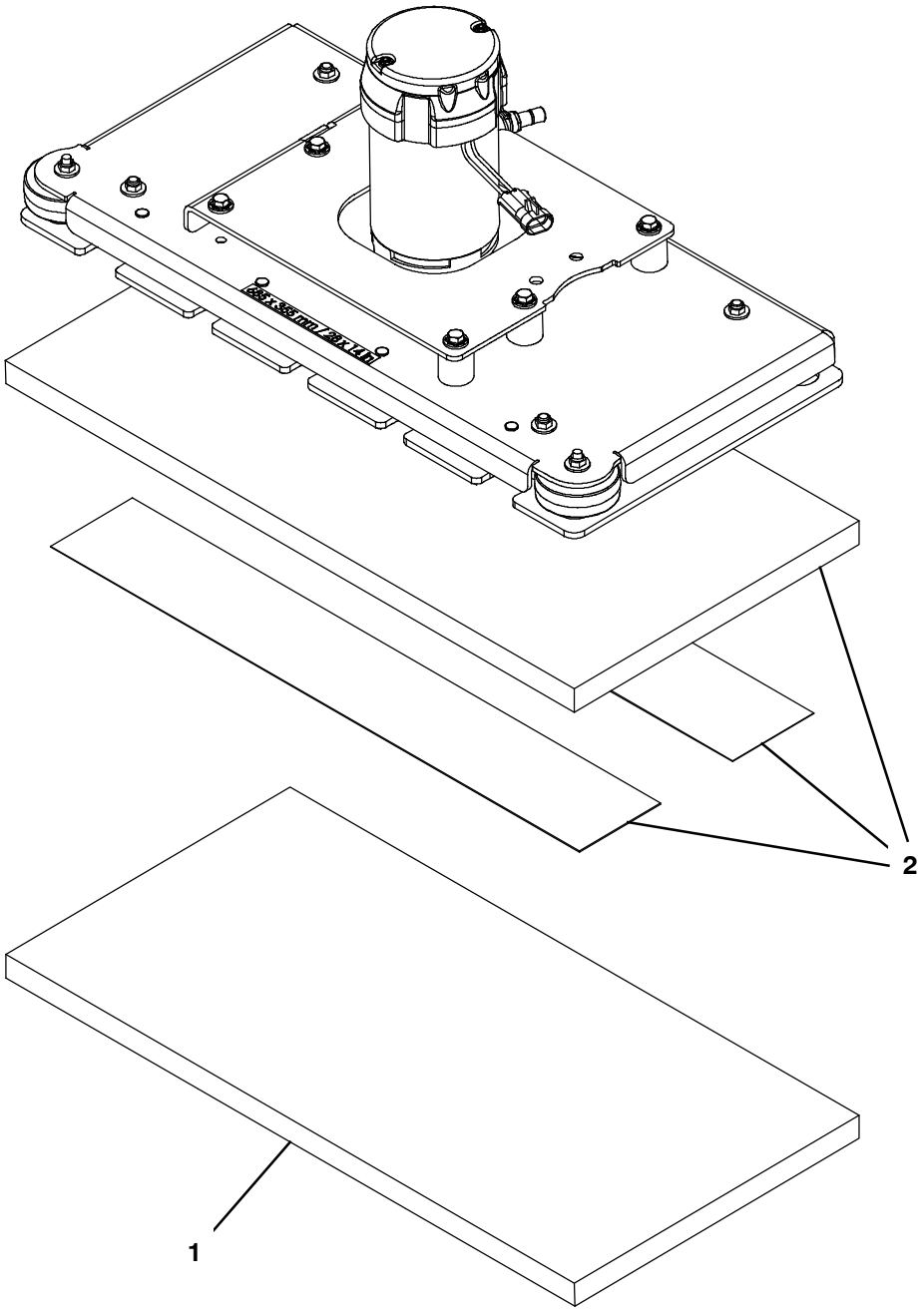

Ref.	Part No.	Serial Number	Description	Qty.
1	1223247	( )	Pad, Scb, 28 X 14, Blu [1pc=1pad]	1
1	1244690	( )	Pad, Buff, 28 X 14, Red [1pick=1ctn]	1
1	1223246	( )	Pad, Polish, 28 X 14, White [1pc=1pad]	1
1	1223248	( )	Pad, Surf Prep, 28 X 14, Mar [1pc=1pad]	1
1	1223250	( )	Pad, Scb, 28 X 14, Green [1pick=1ctn]	1
1	1075563	( )	Pad, Stripping, 28 X 14, Blk [1pick=1ctn]	1
1	1228002	( )	Pad, Melamine, 14” X 28” [Case Of 5]	1
1	1240343	( )	Pad, Polish, 28 X 14, Yel [1pick=1ctn]	1
2	1221839	( )	Pad, Backer, 28 X 14 (Includes Velcro Fasteners)	1

SCRUB HEAD GROUP, DISK 650MM / 26IN

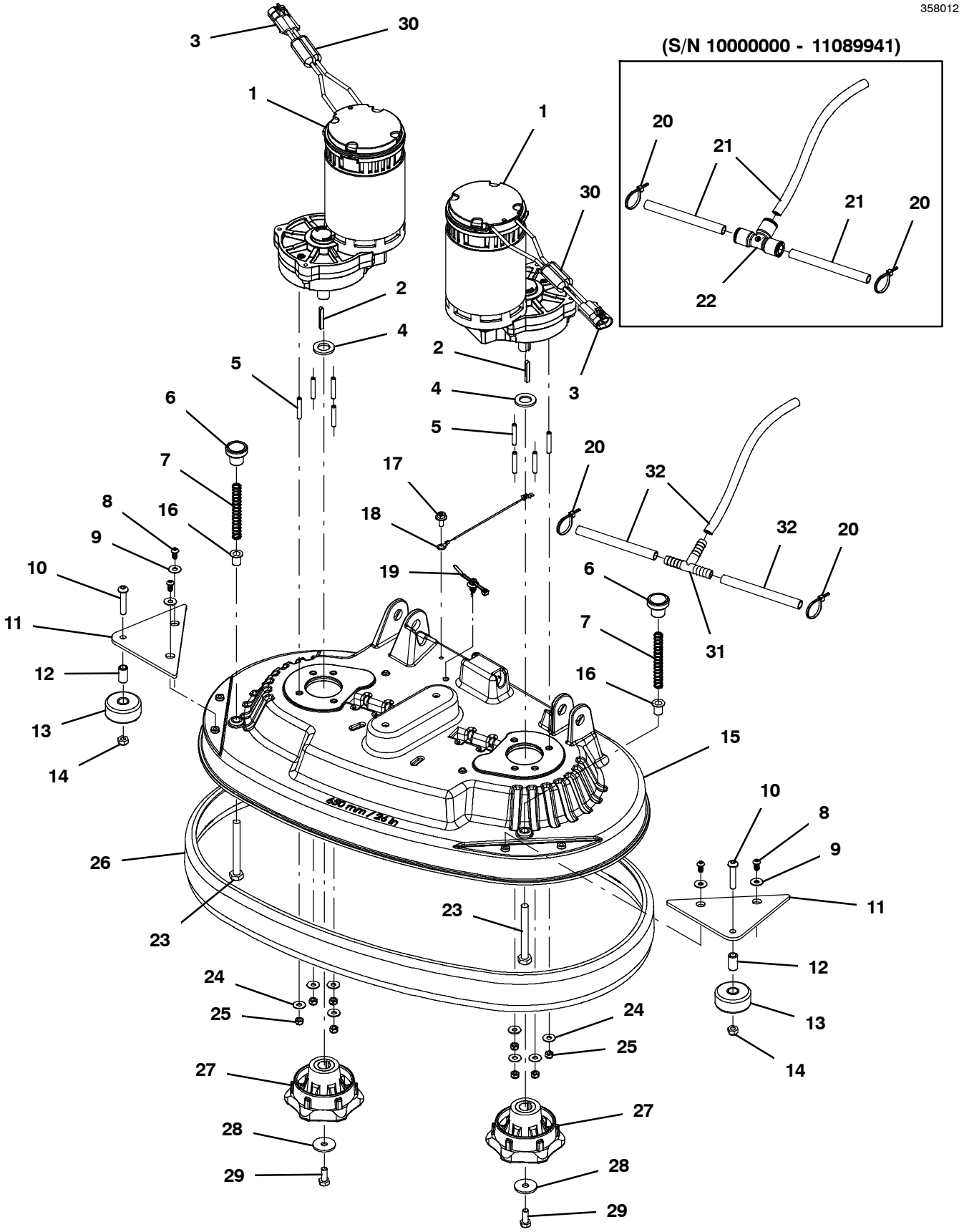

SCRUB HEAD GROUP, DISK 650MM / 26IN

	Ref.	Part No.	Serial Number	Description	Qty.
∇	1	4032652	(11107624-)	Motor, Ele, 24vdc, 0230rpm (Canada Also Requires Qty 2 Ferrite #1227867)	2
∇	1	1023067	(10000000- 11107623)	Motor, Ele, 24vdc 0220rpm 0.75hp Gear (Replaced By 4032652 - Canada Also Requires Qty 2 Ferrite #1227867)	2
▲		1031775	( )	Brush Kit, Carbon, Motor, Replmt [T5]	1
▲	2	1014328	( )	Key, Sq, 05mm X 05mm, 25mml	1
▲	2	1031681	( )	Harness, Connector, Brush- Motor [T5] Us	1
	3	1022549	( )	Spacer, Shaft, 17.15b 30.0d 3.0l, Ss	2
	4	1025853	( )	Screw, Set, M6 X 1.00 X 35, Nl, Ss	8
	5	1222988	( )	Knob, Rnd, 31.0d 27.0l M10, Plstc	2
	6	626081	( )	Spring, Cmpr, 0.48od .04wir 03.5l	2
	7	1227865	( )	Screw, Trs, M6 X 1.0 X 12, Phl, Ss, Nl	4
	8	01684	( )	Washer, Flat, 0.27b 0.69d .05, Ss	4
	9	397826	( )	Screw, Btn, M8 X 1.25 X 40, Ss	2
	10	1227709	( )	Bracket, Roller, Wall	2
	11	222496	( )	Sleeve, P/M, 0.32b 0.50d 0.9l [430ss]	2
	12	222403	( )	Wheel, 02.0d 0.88w 0.50b	2
	13	08713	( )	Nut, Hex, Lock, M8 X 1.25, Nl, Ss	2
∇	14	9018835	( )	Housing, Disc, 65cm, Afmkt [T600, Na,Ce]	1
▲	15	1247152	( )	Bushing, Flng, 10mmb 12mmd 17mml	2
	16	1034731	( )	Screw, Hex, M6 X 1.00 X 16, Sems, Ss	1
	17	1074344	( )	Harness, Ele [Ring With .250m Tail]	1
	18	1210807	( )	Wire, Tie [W/.25” Fir Tree Clip]	1
	19	130773	( )	Tie, Cable, Nyl, 11.0l, .14w, 3.0 Max. D	2
	20	9014145	(10000000- 11089941)	Hose, Afmkt, Pe, .375id .50od, 05ft	1
	21	1212858	(10000000- 11089941)	Fitting, Plstc, Tee, Qf08/Qf08/Qf08	1
	22	09746	( )	Screw, Hex, M10 X 1.50 X 90, Ss	2
	23	01684	( )	Washer, Flat, 0.27b 0.69d .05, Ss	8
	24	08712	( )	Nut, Hex, Lock, M6 X 1.00, Nl, Ss	8
	26	1232324	( )	Bumper, Head, 65cm, Skirt, Im	1
	27	1071637	( )	Hub, Drive, Brush, Disk, 17mmb	2
	28	1017218	( )	Washer, Flat, 0.32b 1.00d .12, Ss	2
	29	12273	( )	Screw, Hex, M8 X 1.25 X 20, Nl, Ss	2
	30	1227867	( )	Inductor, Ferrite [Split Case,407@100hz] (Canada Only)	4
	31	1247259	(11089942-)	Fitting, Plstc, Tee, Bm06/Bm06/Bm06, Pyp	1
	32	1006416	(11089942-)	Hose, Afmkt, Pvc, Clr, 0.38id, 03ft	1

∇ ASSEMBLY

▲ INCLUDED IN ASSEMBLY

SCRUB HEAD GROUP, DISK 700MM / 28IN

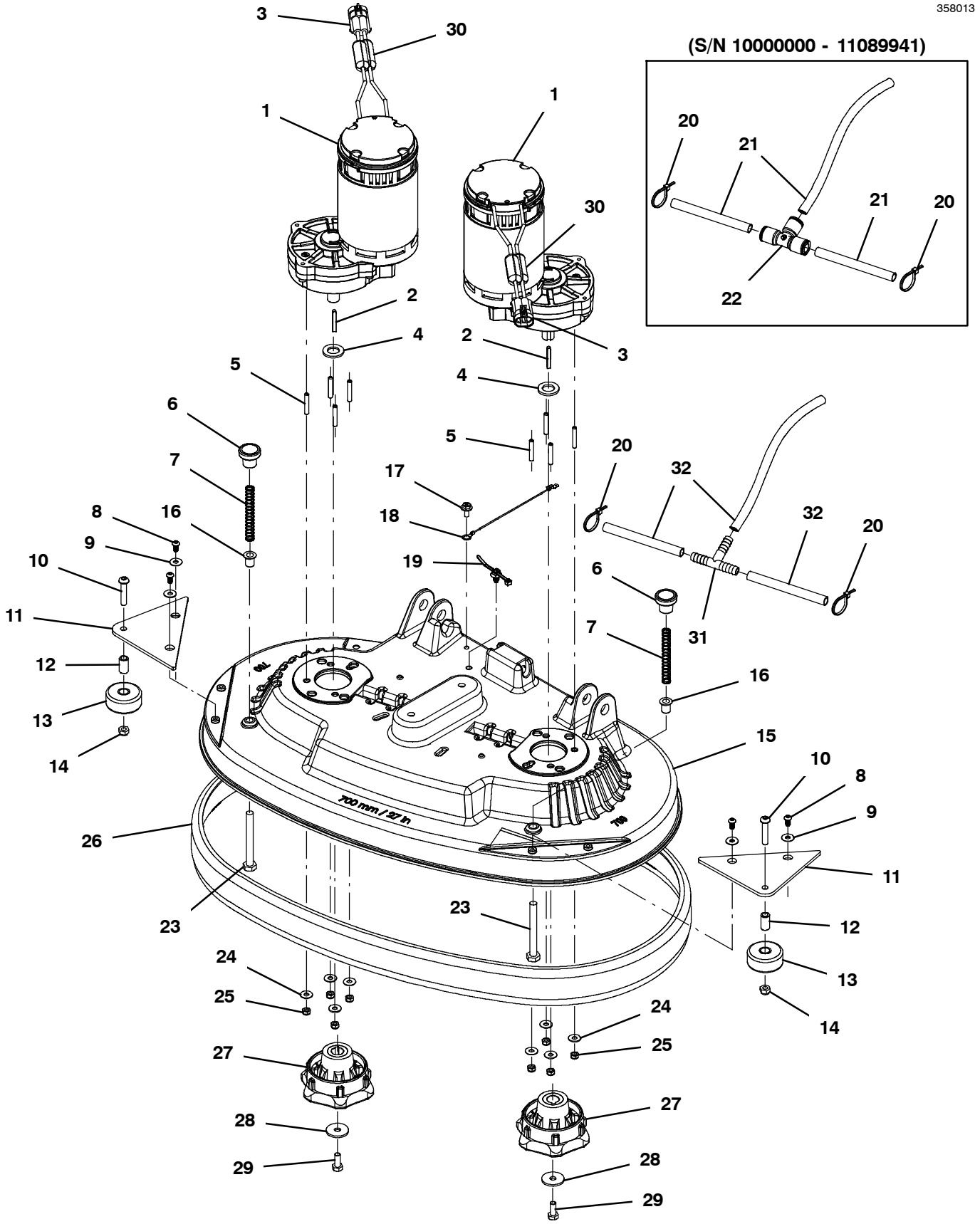

SCRUB HEAD GROUP, DISK 700MM / 28IN

	Ref.	Part No.	Serial Number	Description	Qty.
∇	1	4032652	(11107624-)	Motor, Ele, 24vdc, 0230rpm (Canada Also Requires Qty 2 Ferrite #1227867)	2
∇	1	1023067	(10000000- 11107623)	Motor, Ele, 24vdc 0220rpm 0.75hp Gear (Replaced By 4032652 - Canada Also Requires Qty 2 Ferrite #1227867)	2
▲		1031775	( )	Brush Kit, Carbon, Motor, Replmt [T5]	1
▲	2	1014328	( )	Key, Sq, 05mm X 05mm, 25mml	1
▲	3	1031681	( )	Harness, Connector, Brush- Motor [T5] Us	1
	4	1022549	( )	Spacer, Shaft, 17.15b 30.0d 3.0l, Ss	2
	5	1025853	( )	Screw, Set, M6 X 1.00 X 35, Nl, Ss	8
	6	1222988	( )	Knob, Rnd, 31.0d 27.0l M10, Plstc	2
	7	626081	( )	Spring, Cmpr, 0.48od .04wir 03.5l	2
	8	1227865	( )	Screw, Trs, M6 X 1.0 X 12, Phl, Ss, Nl	4
	9	01684	( )	Washer, Flat, 0.27b 0.69d .05, Ss	4
	10	397826	( )	Screw, Btn, M8 X 1.25 X 40, Ss	2
	11	1227709	( )	Bracket, Roller, Wall	2
	12	222496	( )	Sleeve, P/M, 0.32b 0.50d 0.9l [430ss]	2
	13	222403	( )	Wheel, 02.0d 0.88w 0.50b	2
	14	08713	( )	Nut, Hex, Lock, M8 X 1.25, Nl, Ss	2
∇	15	9018824	( )	Housing, Disc, 70cm, Afmkt [T600, Na,Ce]	1
▲	16	1247152	( )	Bushing, Flng, 10mmb 12mmd 17mml	2
	17	1034731	( )	Screw, Hex, M6 X 1.00 X 16, Sems, Ss	1
	18	1074344	( )	Harness, Ele [Ring With .250m Tail]	1
	19	1210807	( )	Wire, Tie [W/.25” Fir Tree Clip]	1
	20	130773	( )	Tie, Cable, Nyl, 11.0l, .14w, 3.0 Max. D	2
	21	9014145	(10000000- 11089941)	Hose, Afmkt, Pe, .375id .50od, 05ft	1
	22	1212858	(10000000- 11089941)	Fitting, Plstc, Tee, Qf08/Qf08/Qf08	1
	23	09746	( )	Screw, Hex, M10 X 1.50 X 90, Ss	2
	24	01684	( )	Washer, Flat, 0.27b 0.69d .05, Ss	8
	25	08712	( )	Nut, Hex, Lock, M6 X 1.00, Nl, Ss	8
	26	1232325	( )	Bumper, Head, 70cm, Skirt, Im	1
	27	1071637	( )	Hub, Drive, Brush, Disk, 17mmb	2
	28	1017218	( )	Washer, Flat, 0.32b 1.00d .12, Ss	2
	29	12273	( )	Screw, Hex, M8 X 1.25 X 20, Nl, Ss	2
	30	1227867	( )	Inductor, Ferrite [Split Case,407@100hz] (Canada Only)	4
	31	1247259	(11089942-)	Fitting, Plstc, Tee, Bm06/Bm06/Bm06, Pyp	1
	32	1006416	(11089942-)	Hose, Afmkt, Pvc, Clr, 0.38id, 03ft	1

∇ ASSEMBLY

▲ INCLUDED IN ASSEMBLY

SCRUB HEAD GROUP, DISK 800MM / 32IN

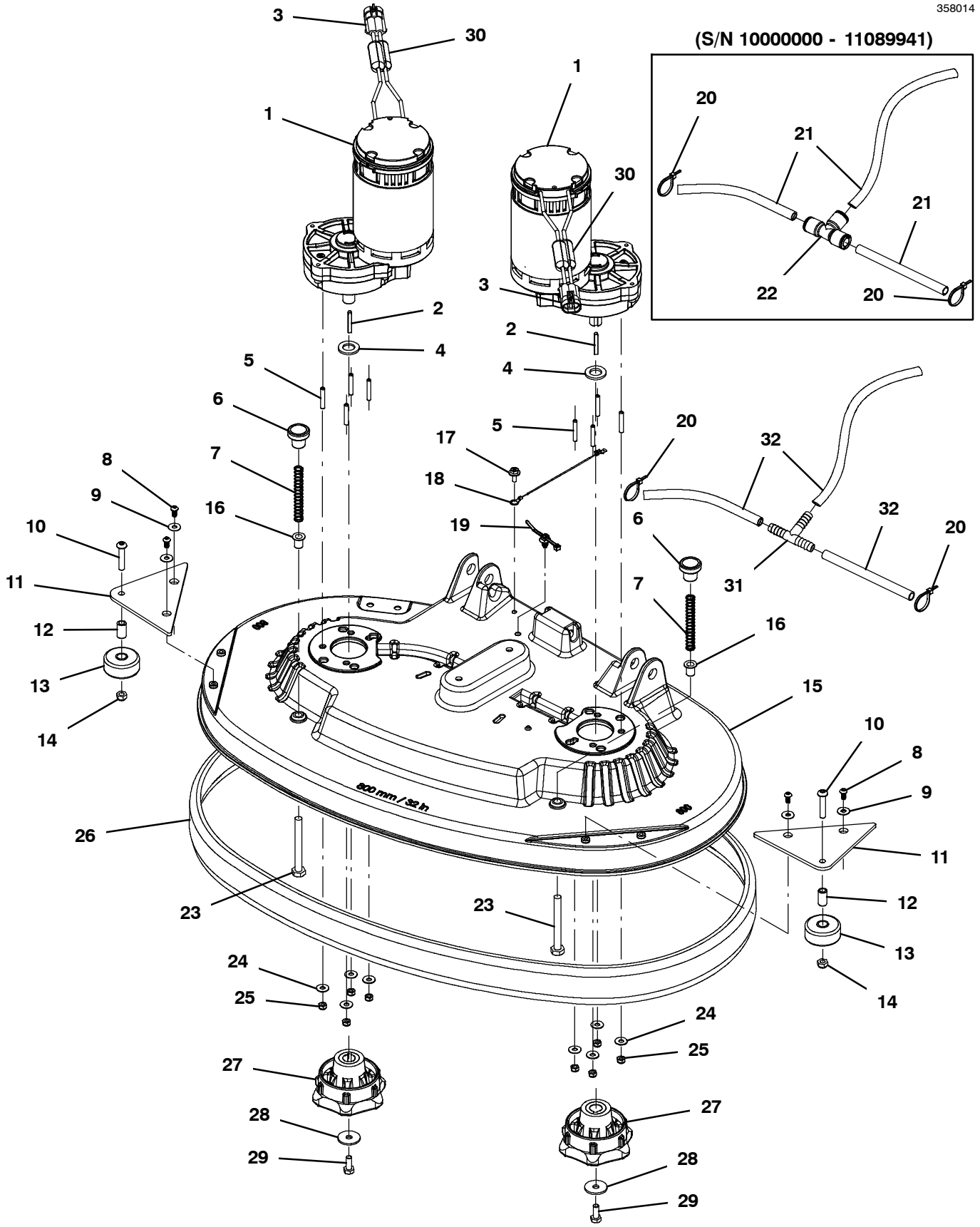

SCRUB HEAD GROUP, DISK 800MM / 32IN

	Ref.	Part No.	Serial Number	Description	Qty.
∇	1	4032652	(11107624-)	Motor, Ele, 24vdc, 0230rpm (Canada Also Requires Qty 2 Ferrite #1227867)	2
∇	1	1023067	(10000000- 11107623)	Motor, Ele, 24vdc 0220rpm 0.75hp Gear (Replaced By 4032652 - Canada Also Requires Qty 2 Ferrite #1227867)	2
▲		1031775	( )	Brush Kit, Carbon, Motor, Replmt [T5]	1
▲	2	1014328	( )	Key, Sq, 05mm X 05mm, 25mml	1
▲	3	1031681	( )	Harness, Connector, Brush- Motor [T5] Us	1
	4	1022549	( )	Spacer, Shaft, 17.15b 30.0d 3.0l, Ss	2
	5	1025853	( )	Screw, Set, M6 X 1.00 X 35, Nl, Ss	8
	6	1222988	( )	Knob, Rnd, 31.0d 27.0l M10, Plstc	2
	7	626081	( )	Spring, Cmpr, 0.48od .04wir 03.5l	2
	8	1227865	( )	Screw, Trs, M6 X 1.0 X 12, Phl, Ss, Nl	4
	9	01684	( )	Washer, Flat, 0.27b 0.69d .05, Ss	4
	10	397826	( )	Screw, Btn, M8 X 1.25 X 40, Ss	2
	11	1227709	( )	Bracket, Roller, Wall	2
	12	222496	( )	Sleeve, P/M, 0.32b 0.50d 0.9l [430ss]	2
	13	222403	( )	Wheel, 02.0d 0.88w 0.50b	2
	14	08713	( )	Nut, Hex, Lock, M8 X 1.25, Nl, Ss	2
∇	15	9018823	( )	Housing, Disc, 80cm, Afmkt [T600, Na,Ce]	1
▲	16	1247152	( )	Bushing, Flng, 10mmb 12mmd 17mml	2
	17	1034731	( )	Screw, Hex, M6 X 1.00 X 16, Sems, Ss	1
	18	1074344	( )	Harness, Ele [Ring With .250m Tail]	1
	19	1210807	( )	Wire, Tie [W/.25” Fir Tree Clip]	1
	20	130773	( )	Tie, Cable, Nyl, 11.0l, .14w, 3.0 Max. D	2
	21	9014145	(10000000- 11089941)	Hose, Afmkt, Pe, .375id .50od, 05ft	1
	22	1212858	(10000000- 11089941)	Fitting, Plstc, Tee, Qf08/Qf08/Qf08	1
	23	09746	( )	Screw, Hex, M10 X 1.50 X 90, Ss	2
	24	01684	( )	Washer, Flat, 0.27b 0.69d .05, Ss	8
	25	08712	( )	Nut, Hex, Lock, M6 X 1.00, Nl, Ss	8
	26	1232326	( )	Bumper, Head, 80cm, Skirt, Im	1
	27	1071637	( )	Hub, Drive, Brush, Disk, 17mmb	2
	28	1017218	( )	Washer, Flat, 0.32b 1.00d .12, Ss	2
	29	12273	( )	Screw, Hex, M8 X 1.25 X 20, Nl, Ss	2
	30	1227867	( )	Inductor, Ferrite [Split Case,407@100hz] (Canada Only)	4
	31	1247259	(11089942-)	Fitting, Plstc, Tee, Bm06/Bm06/Bm06, Pyp	1
	32	1006416	(11089942-)	Hose, Afmkt, Pvc, Clr, 0.38id, 03ft	1

∇ ASSEMBLY

▲ INCLUDED IN ASSEMBLY

SCRUB HEAD GROUP, CYLINDRICAL 700MM / 28IN

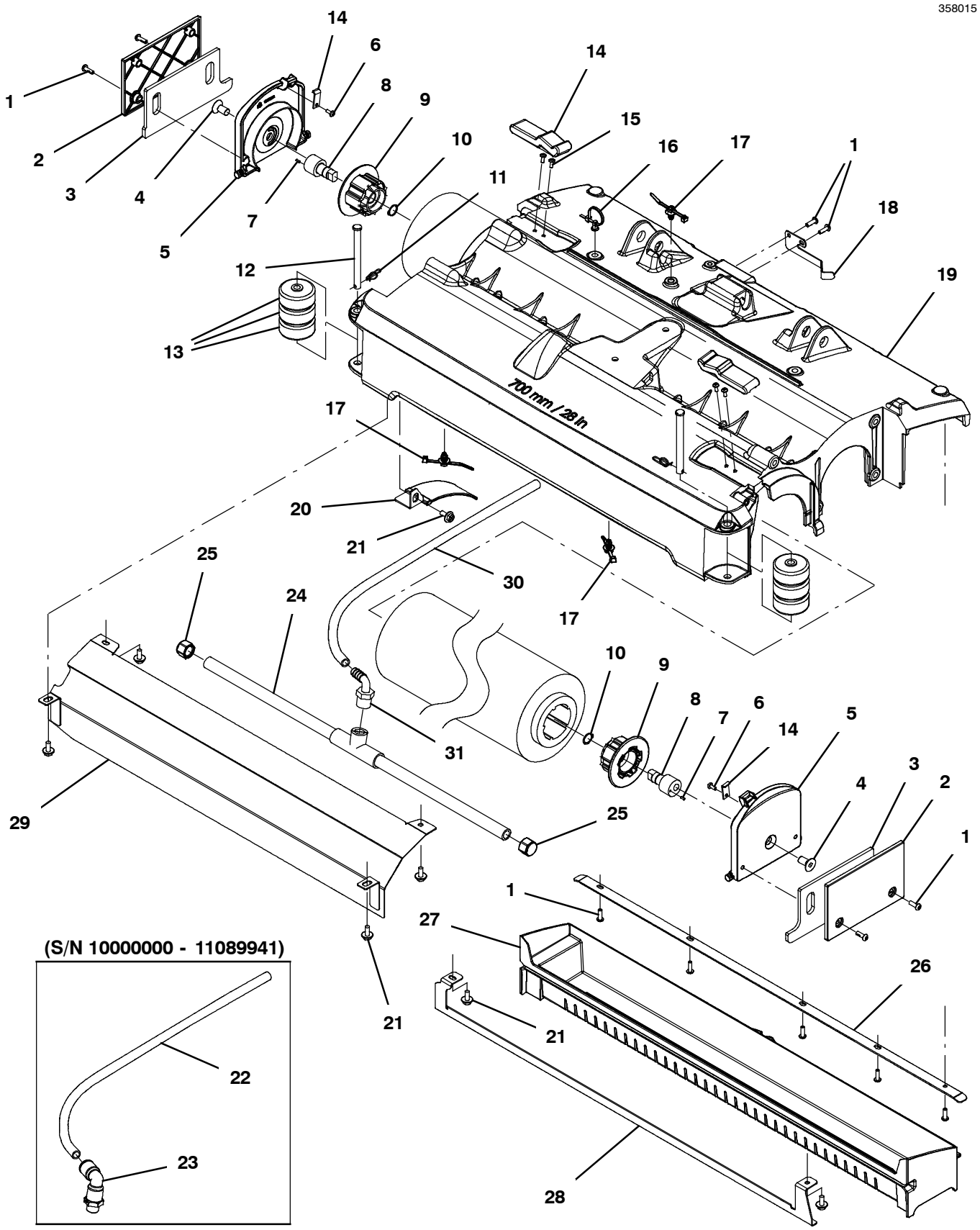

SCRUB HEAD GROUP, CYLINDRICAL 700MM / 28IN

Ref.	Part No.	Serial Number	Description	Qty.
1	1205799	( )	Screw, Btn, M5 X 0.8 X 16, 8.8, Nl, Torx	2
2	1218032	( )	Cover, Skirt, 2cyl [T500]	2
3	1218573	( )	Skirt, Side, Scrb, Cyl [T500]	2
4	390996	( )	Screw, Flt, Soc, M10 X 1.50 X 20,10.9,Nl	2
5	1218692	( )	Door, Brush, 2cyl [Machined, T500]	1
6	49697	( )	Screw, Pan, Phl, M4 X 0.70 X 10, Ss	6
7	222184	( )	Pin, Roll, .094d X 0.25l, .094/.097	2
8	222177	( )	Shaft, Plug, Idler	2
9	1057629	( )	Plug, Idler, Brush [Sgl Brg]	2
10	01516	( )	Ring, Retaining, Ext, 0.59d, Basic	2
11	1216647	( )	Pin, Cotter, Hair, 0.38d .054 Wir	2
12	49914	( )	Pin, Clevis, 0.37d X 4.00l	2
13	630477	( )	Wheel, Pyu, 02.0d 0.38w, Gray	6
14	1207285	( )	Latch, Draw, Rbr, W/ Keeper, Yellow	2
15	49697	( )	Screw, Pan, Phl, M4 X 0.70 X 10, Ss	6
16	1221161	( )	Tie, Cable, Nyl, Push Mount, 76mm Max D	1
17	1210807	( )	Wire, Tie [W/.25” Fir Tree Clip]	3
18	1218242	( )	Bracket, Spring, Tray, Debris [T500]	1
19	1217942	( )	Housing, Cyl, 70cm [Machined]	1
20	1029358	( )	Deflector, Water, Cyl Head	1
21	1034731	( )	Screw, Hex, M6 X 1.00 X 16, Sems, Ss	7
22	9014145	(10000000- 11089941)	Hose, Afmkt, Pe, .375id .50od, 05ft	1
23	1212987	(10000000- 11089941)	Fitting, Plstc, E90, Qf08/Pm06, Swivel	1
24	1046049	( )	Tube Assy, Bar, Spray, 70cm [T5, 5680]	1
25	1025580	( )	Fitting, Pipe, Cap, P06, Nyl	2
26	1218153	( )	Bracket, Tray, Debris [T500]	1
27	1218144	( )	Tray, Debris, 700mm [Im] [Rhine]	1
28	1218577	( )	Bracket, Slide, Tray, Debris	1
29	1219969	( )	Panel Wldt, Wrap, Brush [T500]	1
30	1006416	(11089942-)	Hose, Afmkt, Pvc, Clr, 0.38id, 03ft	1
31	1005630	(11089942-)	Fitting, Plstc, E90, Bm06/Pm06, Nyl	1

SCRUB HEAD GROUP, CYLINDRICAL 700MM / 28IN - CONT'D

355430

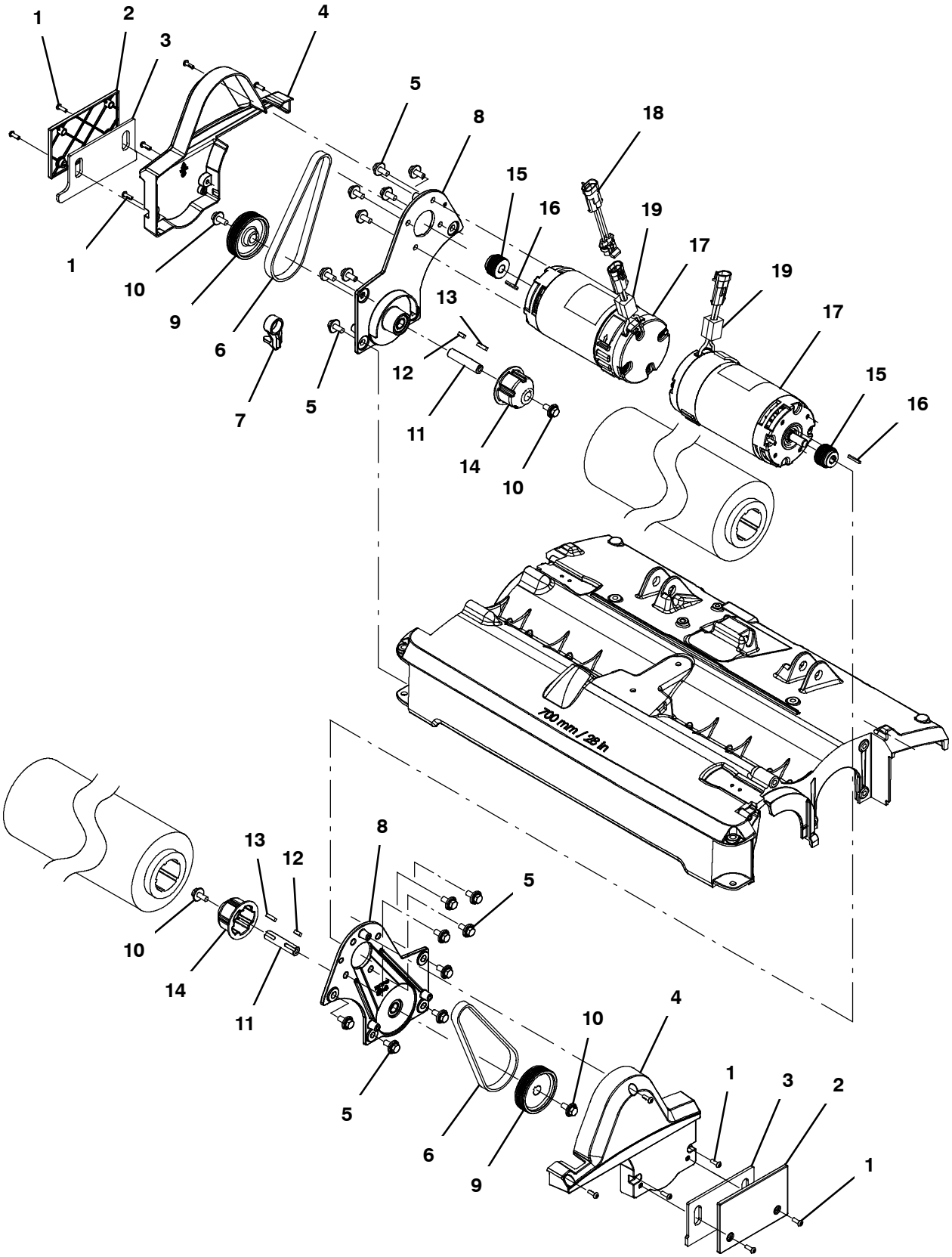

SCRUB HEAD GROUP, CYLINDRICAL 700MM / 28IN - CONT'D

	Ref.	Part No.	Serial Number	Description	Qty.
	1	1205799	( )	Screw, Btn, M5 X 0.8 X 16, 8.8, Nl, Torx	12
	2	1218032	( )	Cover, Skirt, 2cyl [T500]	2
	3	1218573	( )	Skirt, Side, Scrb, Cyl [T500]	2
	4	1218012	( )	Cover, Belt, 2 Cyl [T500]	2
	5	1020341	( )	Screw, Hex, M8 X 1.25 X 20, Ss, Sems	16
∇	6	9015765	( )	Belt Replacement Kit (Cylindrical)	1
▲		1035888	( )	Belt, Drive, 6grv, 508 L X 14 W, [6pj]	2
▲	7	1203758	( )	Tool, Installation, Belt	1
∇	8	9018012	( )	Bracket Assy, Motor, Ci (Includes Bearings And Tube - Not Available Separately)	2
▲	9	1035173	( )	Sheave, 06grv, 2.96pd 0.59b, Alm [Pj]	1
▲	10	1020341	( )	Screw, Hex, M8 X 1.25 X 20, Ss, Sems	2
▲	11	1021050	( )	Shaft, Drive, 15.0d X 65.5l [T5, 1610]	1
▲	12	00961	( )	Key, Sq, 0.19 X 0.19, 0.50l	1
▲	13	00911	( )	Key, Sq, 0.19 X 0.19, 0.75l	1
▲	14	378805	( )	Plug, Drive, Brush, Mach	1
	15	1033528	( )	Sheave, 06grv, 1.33pd 0.50b, Alm [Pj]	2
	16	00954	( )	Key, Sq, 0.12 X 0.12, 1.00l	2
∇	17	1223429	( )	Motor, Ele, 24vdc 1500rpm 0.60hp (Canada Also Require Qty 1 Ferrite #1065665)	2
▲		1031775	( )	Brush Kit, Carbon, Motor, Replmt [T5]	1
	18	1052895	( )	Harness, Adapter, Motor [T7/T5]	1
	19	1065665	( )	Inductor, 32.3mml [Ferrite 10- 250mhz] (Canada Only)	2

∇ ASSEMBLY

▲ INCLUDED IN ASSEMBLY

SCRUB HEAD GROUP, ORBITAL 700MM / 28IN

358016

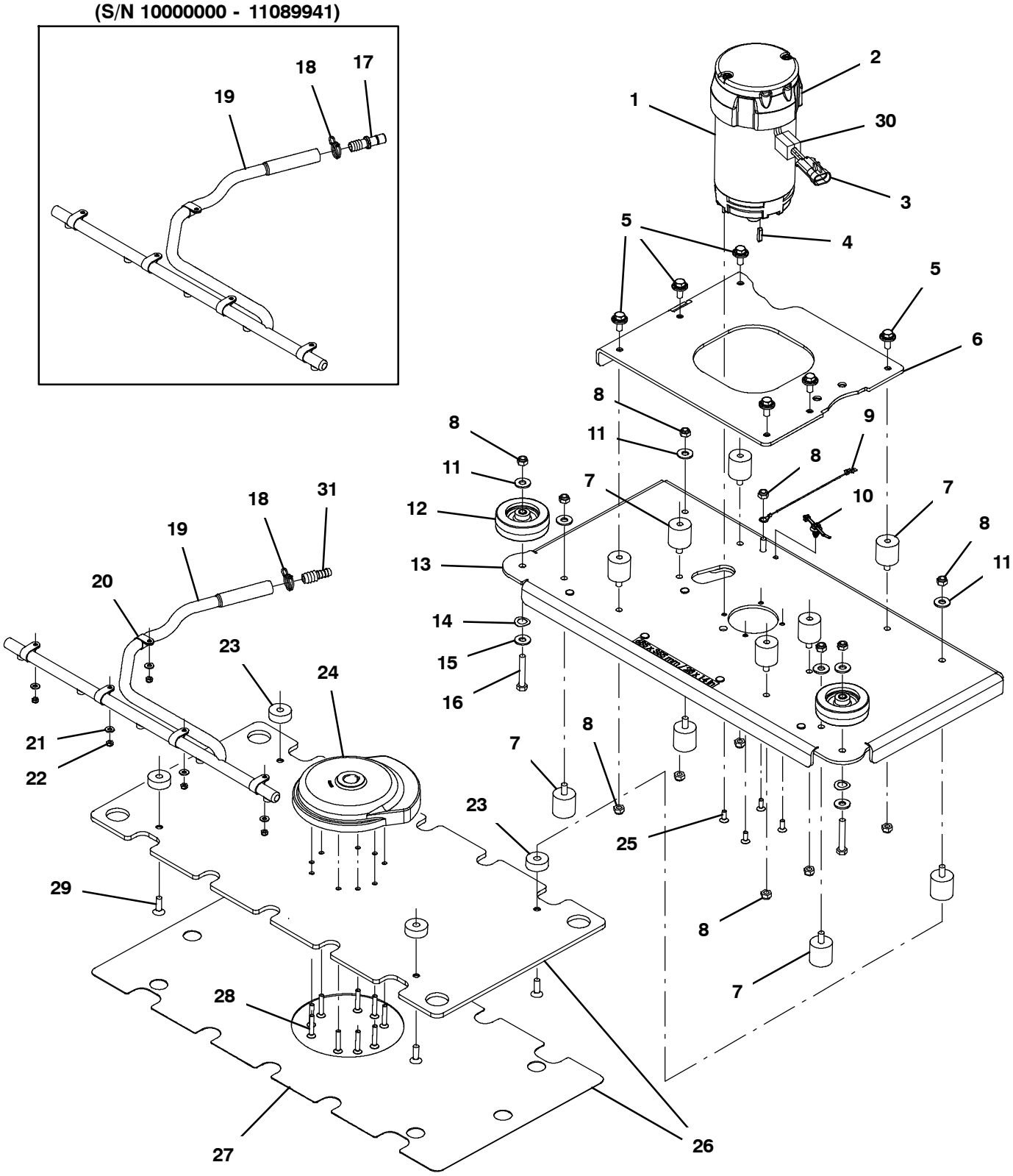

SCRUB HEAD GROUP, ORBITAL 700MM / 28IN

	Ref.	Part No.	Serial Number	Description	Qty.
∇	1	1219913	( )	Motor, Ele, 24vdc, 2200rpm, 0.75hp 28.0a (Canada Also Requires Qty 1 Ferrite #1065665)	1
▲	2	1059370	( )	Brush, Motor, Replmt [Bag Of 4)	1
▲	3	1031681	( )	Harness, Connector, Brush- Motor [T5] Us	1
	4	1231238	( )	Key, Sq, 5mm X 5mm X 22mm	1
	5	1020341	( )	Screw, Hex, M8 X 1.25 X 20, Ss, Sems	6
	6	1220910	( )	Bracket Wldt, Mtg, Head	1
	7	1212543	( )	Isolator, Neoprene, 1.25” X 1.25”, M8	13
	8	08713	( )	Nut, Hex, Lock, M8 X 1.25, Nl, Ss	1
	9	1074344	( )	Harness, Ele [Ring With .250m Tail]	1
	10	1210807	( )	Wire, Tie [W/.25” Fir Tree Clip]	1
	11	01685	( )	Washer, Flat, 0.38b 0.88d .08, Ss	6
	12	1014918	( )	Wheel, 03.0d 0.88w 0.31b, W/ Bshg, Rbr	2
	13	1221766	( )	Housing Wldt, Brush	1
	14	1210221	( )	Washer, Wave, .515b, .875d, .013, Ss	2
	15	01685	( )	Washer, Flat, 0.38b 0.88d .08, Ss	2
	16	49694	( )	Screw, Hex, M8 X 1.25 X 50, Ss	2
	17	1212807	(10000000- 11089942)	Fitting, Plstc, Str, Qm08/Bm08	1
	18	607776	( )	Clamp, Hose, Wir, .73 - .77, Silver	1
	19	1234853	( )	Manifold, Bar, Spray [28in]	1
	20	140916	( )	Clamp, Cable, Nyl, 0.62d, Nat	5
	21	01683	( )	Washer, Flat, 10, Ss	4
	22	09739	( )	Nut, Hex, Lock, M5 X 0.80, Nl, Ss	4
	23	1221850	( )	Spacer, Head	4
	24	9015774	( )	Eccentric Drive Kit, Orbital	1
	25	09163	( )	Screw, Flt, Soc, M6 X 1.00 X 16, 18- 8,Ss	4
∇	26	9015416	( )	Driver Kit, Pad, Ci [T500] (Includes Driver Plate, Driver Face, & Red Buffing Pad)	1
▲	27	1220627	( )	Face, Pad Driver	1
	28	1212710	( )	Screw, Flt, Soc, M6 X 1.00 X 35, 10.9,Nl	6
	29	74077	( )	Screw, Flt, Soc, M8 X 1.25 X 25, Ss	4
	30	1065665	( )	Inductor, 32.3mml [Ferrite 10- 250mhz] (Canada Only)	1
	31	222375	(11089942-)	Fitting, Plstc, Str, Bm06/Bm08	1

∇ ASSEMBLY

▲ INCLUDED IN ASSEMBLY

RECOVERY TANK GROUP, PINCH CUFF SCREW CAP

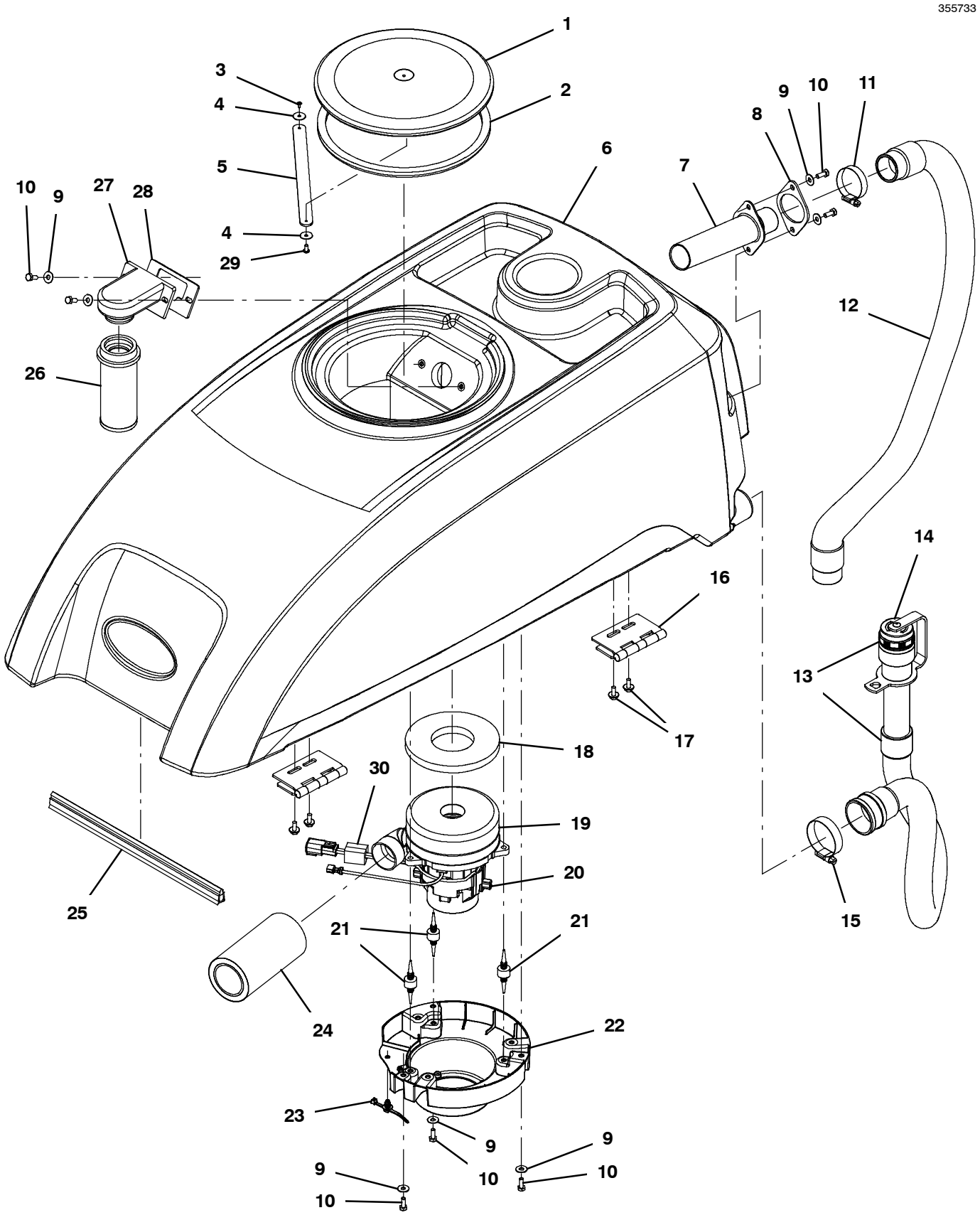

RECOVERY TANK GROUP, PINCH CUFF SCREW CAP

	Ref.	Part No.	Serial Number	Description	Qty.
∇	1	1017958	( )	Lid Assy, Tank, Recvy	1
▲	2	1017959	( )	Seal, Bulb, Str, 0.50h .50w 032.0l, Adh	1
	3	3701.6	( )	Screw, Pan, Phl, 06-32 X 0.38, Shtmtl,Ss	1
	4	1009168	( )	Washer, Flat, 0.17b 0.75d .04, Ss	2
	5	1001005	( )	Strap, Retaining, Cover	1
	6	9015761	( )	Kit, Tank, Recvy, Ci [T500e]	1
	7	1021214	( )	Tube, Hose, Adapter, 1.5d [T5]	1
	8	1024602	( )	Gasket, Neo, .13, 1.97id, 2/3.2bc, Adh	1
	9	01684	( )	Washer, Flat, 0.27b 0.69d .05, Ss	7
	10	11329	( )	Screw, Hex, M6 X 1.00 X 16, Nl, Ss	7
	11	11531	( )	Clamp, Hose, Wormdrive, 1.06-2.00d, .56w	1
	12	1211220	( )	Hose Assy,W/2cuff,1.5d 022l 1.5/1.5[Pvc] (Black - Standard)	1
∇	13	1248221	(10972172-)	Hose Assy, Drain, 1.5id X 11.0l [Pvc] (Black - Standard)	1
▲∇	14	1232385	(10972172-)	Cap, Drain Assy [Black, T500e]	1
▲▲		1008637	( )	Seal, Org, 1.48id 1.76od	1
	15	22297	( )	Clamp, Hose, Wormdrive, 1.56-2.50d, .50w	1
	16	1217669	( )	Hinge Assy, 7.0 Pin, 11 Ga, 100l X 105w	1
	17	1034731	( )	Screw, Hex, M6 X 1.00 X 16, Sems, Ss	4
	18	100038*	( )	Gasket, .50, 02.63id 05.75od, Adh [Epdm]	1
∇	19	1219312*	( )	Fan, Vacuum, 5.7d, 024vdc, 2 Stage (Canada Also Requires Qty 1 Ferrite #1065665)	1
▲	20	372883	( )	Vr, Brush Kit, Motor, Ele	1
	21	1062016	( )	Isolator, Vib, .75d	3
	22	1207368	( )	Mount, Vacfan, 5.7/6.6	1
	23	1210807	( )	Wire, Tie [W/.25” Fir Tree Clip]	1
	24	1068577	( )	Muffler, Exhaust, Vacfan, 150mml [T2/T3]	1
	25	1066431	( )	Seal, Afmkt, Bulb, Dual, 03ft [F/.30gap]	1
	26	630052	( )	Float, Shut-Off, (2)Ball, 1.75d	1
	27	630053	( )	Mount, Cage, Float [20.0 Scrubber]	1
	28	630255	( )	Gasket, Float, Mount	1
	29	606915	( )	Screw, Pan, Phl, 10-16 X 0.38, Tcut, Ss	1
	30	1065665	( )	Inductor, 32.3mml [Ferrite 10-250mhz] (Canada Only)	1

**** For machines serial number range 10835156 - 10842521, vacuum motor replacement requires two gaskets; standard gasket 100038 and extra gasket 223264 (not shown).***

∇ ASSEMBLY

▲ INCLUDED IN ASSEMBLY

RECOVERY TANK GROUP, STANDARD SCREW CAP

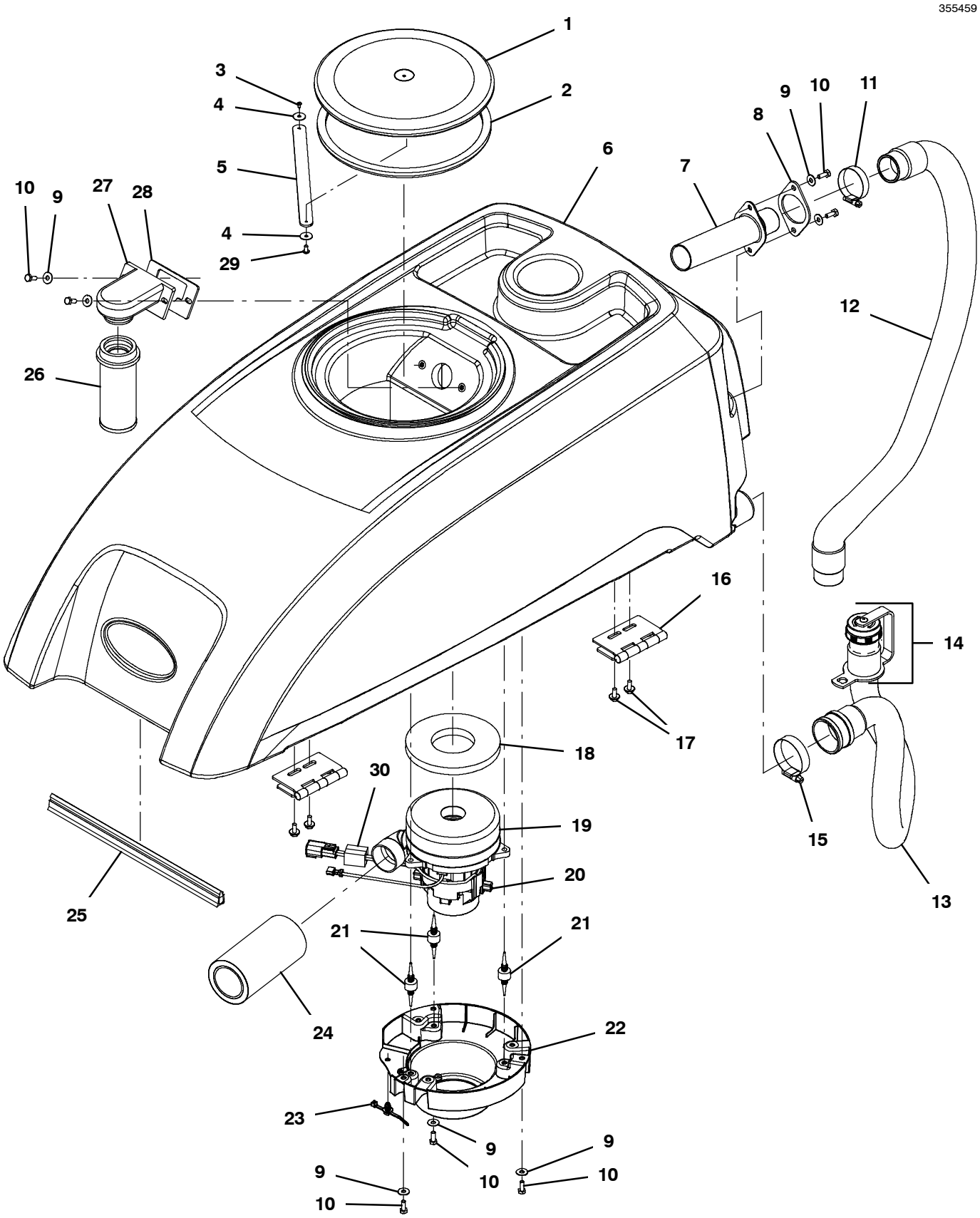

RECOVERY TANK GROUP, STANDARD SCREW CAP

	Ref.	Part No.	Serial Number	Description	Qty.
∇	1	1017958	( )	Lid Assy, Tank, Recvy	1
▲	2	1017959	( )	Seal, Bulb, Str, 0.50h .50w 032.0l, Adh	1
	3	3701.6	( )	Screw, Pan, Phl, 06- 32 X 0.38, Shtmtl,Ss	1
	4	1009168	( )	Washer, Flat, 0.17b 0.75d .04, Ss	2
	5	1001005	( )	Strap, Retaining, Cover	1
	6	9015761	( )	Kit, Tank, Recvy, Ci [T500e]	1
	7	1021214	( )	Tube, Hose, Adapter, 1.5d [T5]	1
	8	1024602	( )	Gasket, Neo, .13, 1.97id, 2/3.2bc, Adh	1
	9	01684	( )	Washer, Flat, 0.27b 0.69d .05, Ss	7
	10	11329	( )	Screw, Hex, M6 X 1.00 X 16, Nl, Ss	7
	11	11531	( )	Clamp, Hose, Wormdrive, 1.06- 2.00d, .56w	1
	12	1211220	( )	Hose Assy,W/2cuff,1.5d 022l 1.5/1.5[Pvc] (Black - Standard)	1
	12	1224414	(10000000- 10972171)	Hose Assy, W/2cuff,1.5d 033l 1.5/1.5[Pu] (Gray - Option) (No Longer Available - Replaced by 1211220 - Black PVC)	1
∇	13	1228252	(10000000- 10972171)	Hose Assy, Drain, 1.5d 014l 2/1.5cap Pvc (Black - Standard) (Replaced by 1248221 - Pinch Cuff Screw Cap Style)	1
▲∇	14	1218955	(10000000- 10972171)	Cap, Drain Assy [Black]	1
▲▲		1008637	( )	Seal, Org, 1.48id 1.76od	1
	15	22297	( )	Clamp, Hose, Wormdrive, 1.56- 2.50d, .50w	1
	16	1217669	( )	Hinge Assy, 7.0 Pin, 11 Ga, 100l X 105w	1
	17	1034731	( )	Screw, Hex, M6 X 1.00 X 16, Sems, Ss	4
	18	100038*	( )	Gasket, .50, 02.63id 05.75od, Adh [Epdm]	1
∇	19	1219312*	( )	Fan, Vacuum, 5.7d, 024vdc, 2 Stage (Canada Also Requires Qty 1 Ferrite #1065665)	1
▲	20	372883	( )	Vr, Brush Kit, Motor, Ele	1
	21	1062016	( )	Isolator, Vib, .75d	3
	22	1207368	( )	Mount, Vacfan, 5.7/6.6	1
	23	1210807	( )	Wire, Tie [W/.25” Fir Tree Clip]	1
	24	1068577	( )	Muffler, Exhaust, Vacfan, 150mml [T2/T3]	1
	25	1066431	( )	Seal, Afmkt, Bulb, Dual, 03ft [F/.30gap]	1
	26	630052	( )	Float, Shut- Off, (2)Ball, 1.75d	1
	27	630053	( )	Mount, Cage, Float [20.0 Scrubber]	1
	28	630255	( )	Gasket, Float, Mount	1
	29	606915	( )	Screw, Pan, Phl, 10- 16 X 0.38, Tcut, Ss	1
	30	1065665	( )	Inductor, 32.3mml [Ferrite 10- 250mhz] (Canada Only)	1

**** For machines serial number range 10835156 - 10842521, vacuum motor replacement requires two gaskets; standard gasket 100038 and extra gasket 223264 (not shown).***

∇ ASSEMBLY

▲ INCLUDED IN ASSEMBLY

SOLUTION TANK GROUP

355458

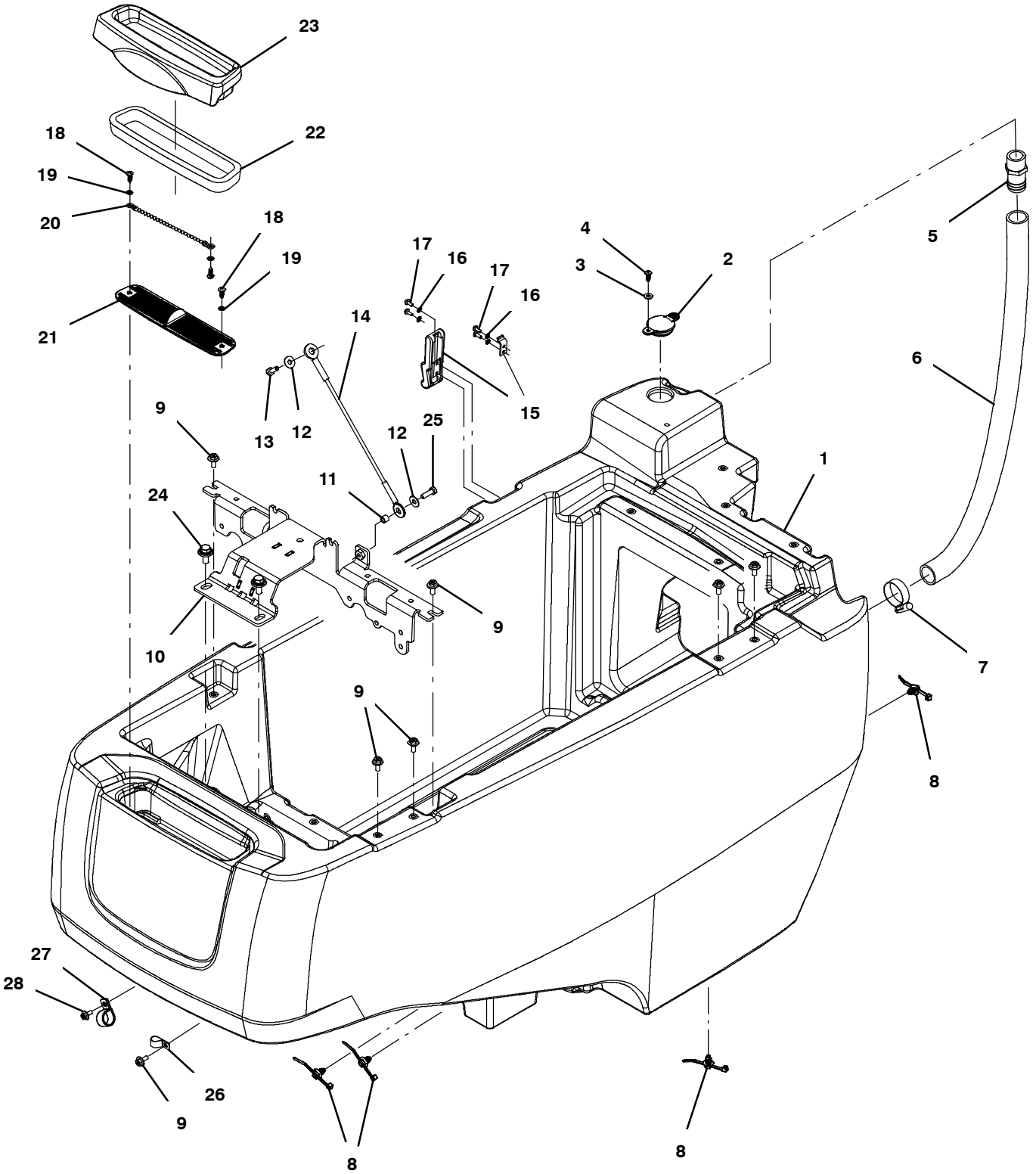

SOLUTION TANK GROUP

Ref.	Part No.	Serial Number	Description	Qty.
1	9018024	( )	Tank Kit, Soltn, Ci [T500e]	1
2	1012965	( )	Cap, Port, Soltn Fill	1
3	01683	( )	Washer, Flat, 10, Ss	1
4	1018155	( )	Screw, Pan, Phl, M5 X 0.80 X 16, Tcut,Ss	1
5	1041082	( )	Fitting, Plstc, Str, Bm16/Pm12	1
6	9015728	( )	Hose Kit, Drain, Soln, Ci [T500/T500e]	1
7	11399	( )	Clamp, Hose, Wormdrive, 0.81- 1.50d, .50w	1
8	1210807	( )	Wire, Tie [W/.25” Fir Tree Clip]	4
9	1034731	( )	Screw, Hex, M6 X 1.00 X 16, Sems, Ss	7
10	1221012	( )	Bracket Wldt, Actuator	1
11	140154	( )	Sleeve, P/M, 0.25b 0.38d 0.3l, Pl	1
12	01684	( )	Washer, Flat, 0.27b 0.69d .05, Ss	2
13	11329	( )	Screw, Hex, M6 X 1.00 X 16, Nl, Ss	1
14	1221803	( )	Cable, Glv .13d 10.5l .38eye /.38eye	1
15	1207285	( )	Latch, Draw, Rbr, W/ Keeper, Yellow	1
16	02938	( )	Washer, Lock, Int, 08, Ss	4
17	49697	( )	Screw, Pan, Phl, M4 X 0.70 X 10, Ss	4
18	1018155	( )	Screw, Pan, Phl, M5 X 0.80 X 16, Tcut,Ss	3
19	07514	( )	Washer, Lock, Int, 10, Ss	3
20	621443	( )	Chain, Ball, 10, 0157mml, Ss	1
21	1219917	( )	Screen, Fltr, 2.0 X 8.7	1
22	9015758	( )	Seal, Tank, Soltn, Ci [T500/T500e]	1
23	1218043	( )	Cover, Fill, Front [T500]	1
23	9015759	( )	Kit, Cover, Fill [T500/T500e] (ec- H2O Models)	1
24	1020341	( )	Screw, Hex, M8 X 1.25 X 20, Ss, Sems	2
25	12277	( )	Screw, Hex, M6 X 1.00 X 20, Nl, Ss	1
26	140300	( )	Clamp, Cable, Stl, 0.50d [Insulated]	1
27	40678- 1	( )	Clamp, Cable, Stl, 0.88d X 0.62w, 1hole (Models w/out ABW Option)	1
28	1034731	( )	Screw, Hex, M6 X 1.00 X 16, Sems, Ss (Models w/out ABW Option)	1

ELECTRICAL GROUP, WET AND AGM BATTERY

355465

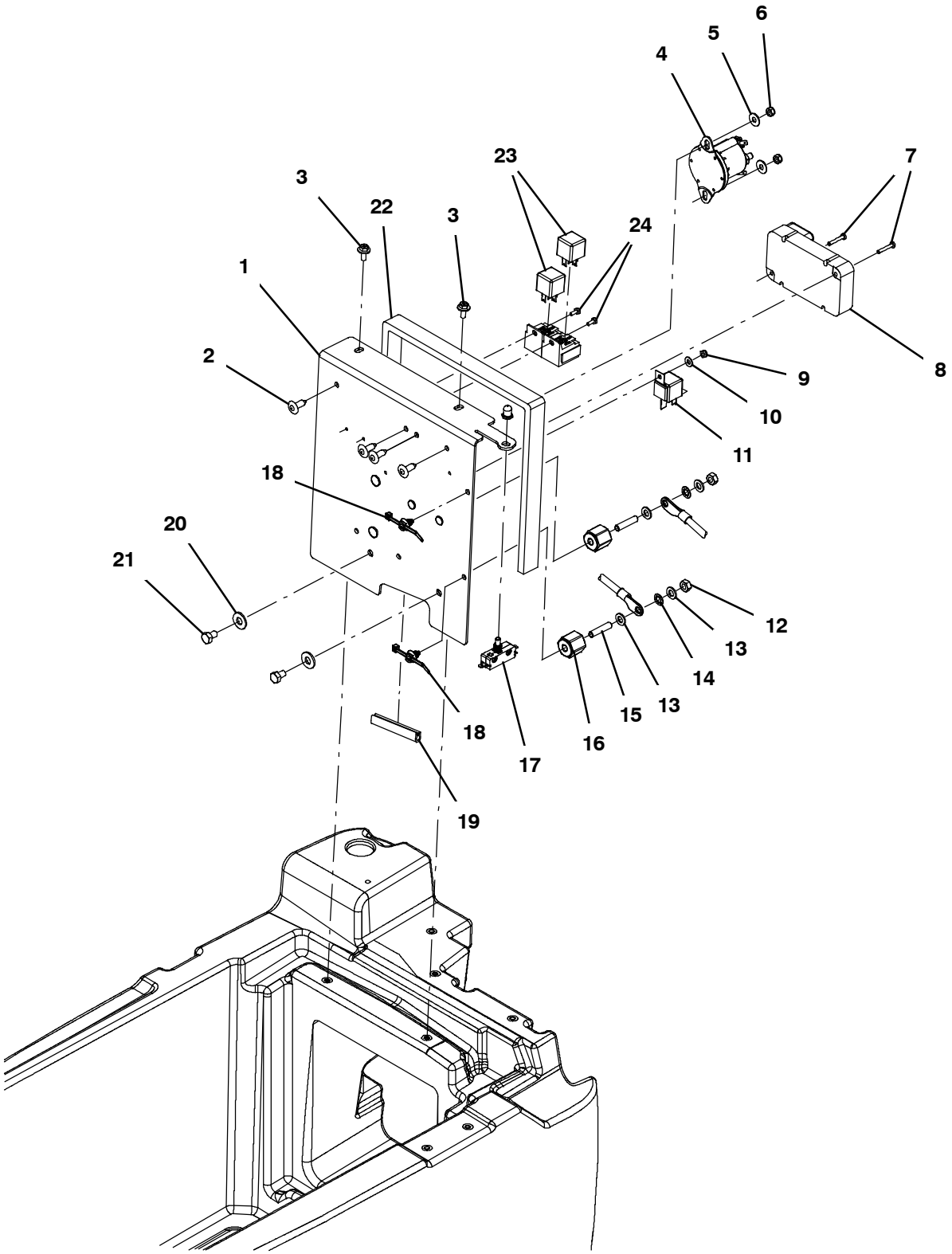

ELECTRICAL GROUP, WET AND AGM BATTERY

Ref.	Part No.	Serial Number	Description	Qty.
1	1224001	( )	Bracket Wldt, Mtg, Ele [T500e]	1
2	140262	( )	Clip, Snap- In	4
3	1034731	( )	Screw, Hex, M6 X 1.00 X 16, Sems, Ss	2
4	1066409	( )	Relay, 24vdc, 150a, No [Trombetta]	1
5	01684	( )	Washer, Flat, 0.27b 0.69d .05, Ss	2
6	08712	( )	Nut, Hex, Lock, M6 X 1.00, Nl, Ss	2
7	1073600	( )	Screw, Pan, M4 X 0.7 X 25, Fmg	2
8	9015776*	( )	Drive Module Kit, Ci	1
9	09739	( )	Nut, Hex, Lock, M5 X 0.80, Nl, Ss	1
10	01683	( )	Washer, Flat, 10, Ss	1
11	1228510	( )	Relay, 24vdc, 80a, Spst No, Plug- In	1
12	41361	( )	Nut, Hex, Std, M8 X 1.25, Brs	1
13	1209373	( )	Washer, Flat, M8.4b X 16d X 1.6, Brs	2
14	43952	( )	Washer, Lock, Int, 0.31, Ss	4
15	607461	( )	Screw, Set, M8 X 1.25 X 35, Nl	2
16	1205345	( )	Stand- Off, Wir, M8, Insulator, Panel	2
17	1071996	( )	Switch, Push, Snap Action, 25a	1
18	1210807	( )	Wire, Tie [W/.25” Fir Tree Clip]	2
19	1020174	( )	Molding, Afmkt, Trim, Pvc, .08 .11, 03ft	1
20	01685	( )	Washer, Flat, 0.38b 0.88d .08, Ss	2
21	386868	( )	Screw, Hex, M8 X 1.25 X 12, Ss	2
22	1219045	( )	Gasket, Cover, Circuitboard	1
23	49309	( )	Relay, 24vdc, 015a, Spdt No	2
24	16944	( )	Screw, Hex, M4 X 0.70 X 10, Fmg	2

*** Requires Tennant *True* service or an authorized Tennant service provider**.

ELECTRICAL GROUP, TPPL AND LITHIUM-ION BATTERY

355808

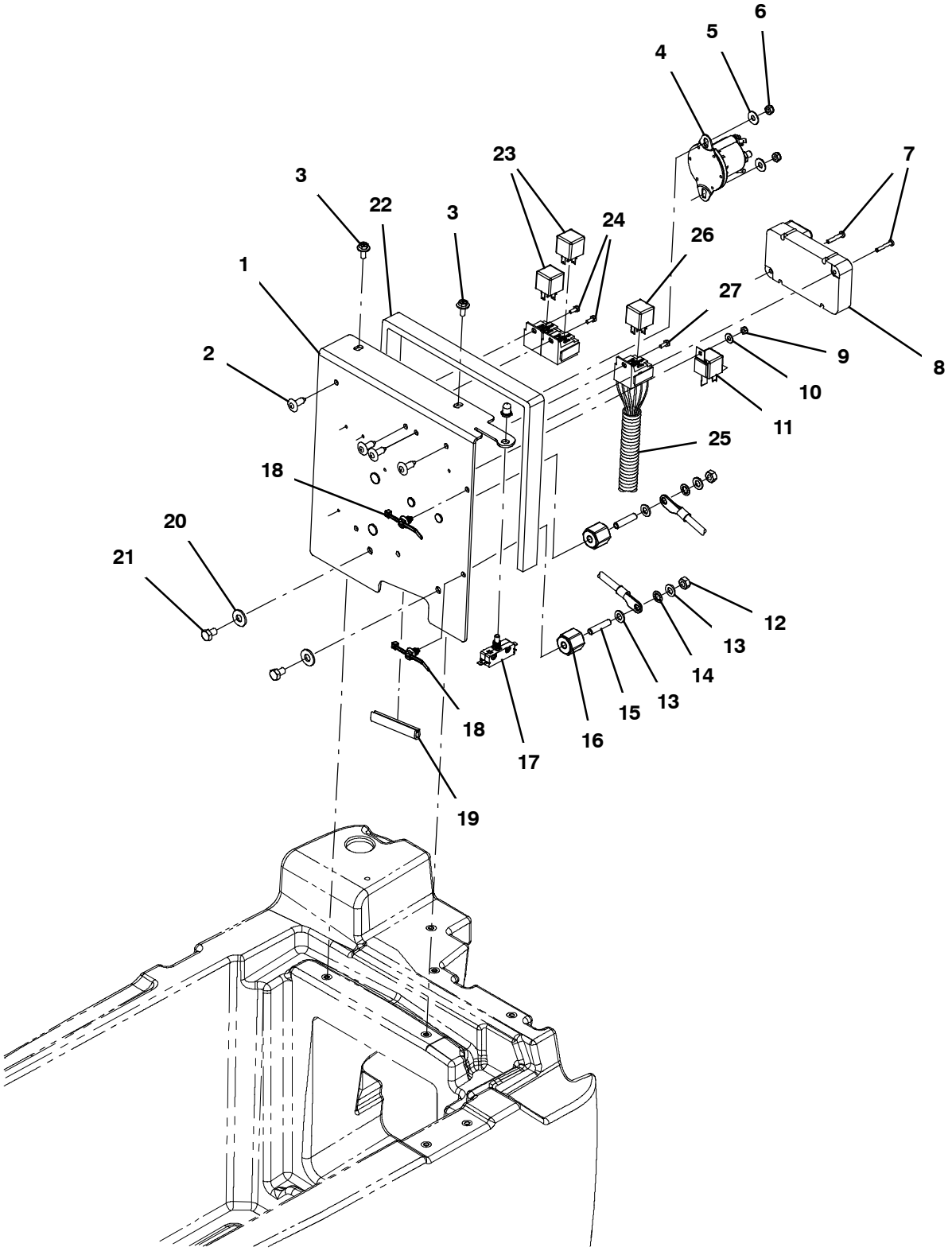

ELECTRICAL GROUP, TPPL AND LITHIUM-ION BATTERY

Ref.	Part No.	Serial Number	Description	Qty.
1	1224001	( )	Bracket Wldt, Mtg, Ele [T500e]	1
2	140262	( )	Clip, Snap-In	4
3	1034731	( )	Screw, Hex, M6 X 1.00 X 16, Sems, Ss	2
4	1066409	( )	Relay, 24vdc, 150a, No [Trombetta]	1
5	01684	( )	Washer, Flat, 0.27b 0.69d .05, Ss	2
6	08712	( )	Nut, Hex, Lock, M6 X 1.00, Nl, Ss	2
7	1073600	( )	Screw, Pan, M4 X 0.7 X 25, Fmg	2
8	9015776*	( )	Drive Module Kit, Ci	1
9	09739	( )	Nut, Hex, Lock, M5 X 0.80, Nl, Ss	1
10	01683	( )	Washer, Flat, 10, Ss	1
11	1228510	( )	Relay, 24vdc, 80a, Spst No, Plug-In	1
12	41361	( )	Nut, Hex, Std, M8 X 1.25, Brs	1
13	1209373	( )	Washer, Flat, M8.4b X 16d X 1.6, Brs	2
14	43952	( )	Washer, Lock, Int, 0.31, Ss	4
15	607461	( )	Screw, Set, M8 X 1.25 X 35, Nl	2
16	1205345	( )	Stand-Off, Wir, M8, Insulator, Panel	2
17	1071996	( )	Switch, Push, Snap Action, 25a	1
18	1210807	( )	Wire, Tie [W/.25” Fir Tree Clip]	2
19	1020174	( )	Molding, Afmkt, Trim, Pvc, .08 .11, 03ft	1
20	01685	( )	Washer, Flat, 0.38b 0.88d .08, Ss	2
21	386868	( )	Screw, Hex, M8 X 1.25 X 12, Ss	2
22	1219045	( )	Gasket, Cover, Circuitboard	1
23	49309	( )	Relay, 24vdc, 015a, Spdt No	2
24	16944	( )	Screw, Hex, M4 X 0.70 X 10, Fmg	2
25	1076909	( )	Harness, Ele, Adaptor, Relay	1
26	49309	( )	Relay, 24vdc, 015a, Spdt No	1
27	16944	( )	Screw, Hex, M4 X 0.70 X 10, Fmg	1

*** Requires Tennant *True* service or an authorized Tennant service provider**.

FRAME AND DRIVE GROUP (S/N 11064202 -)

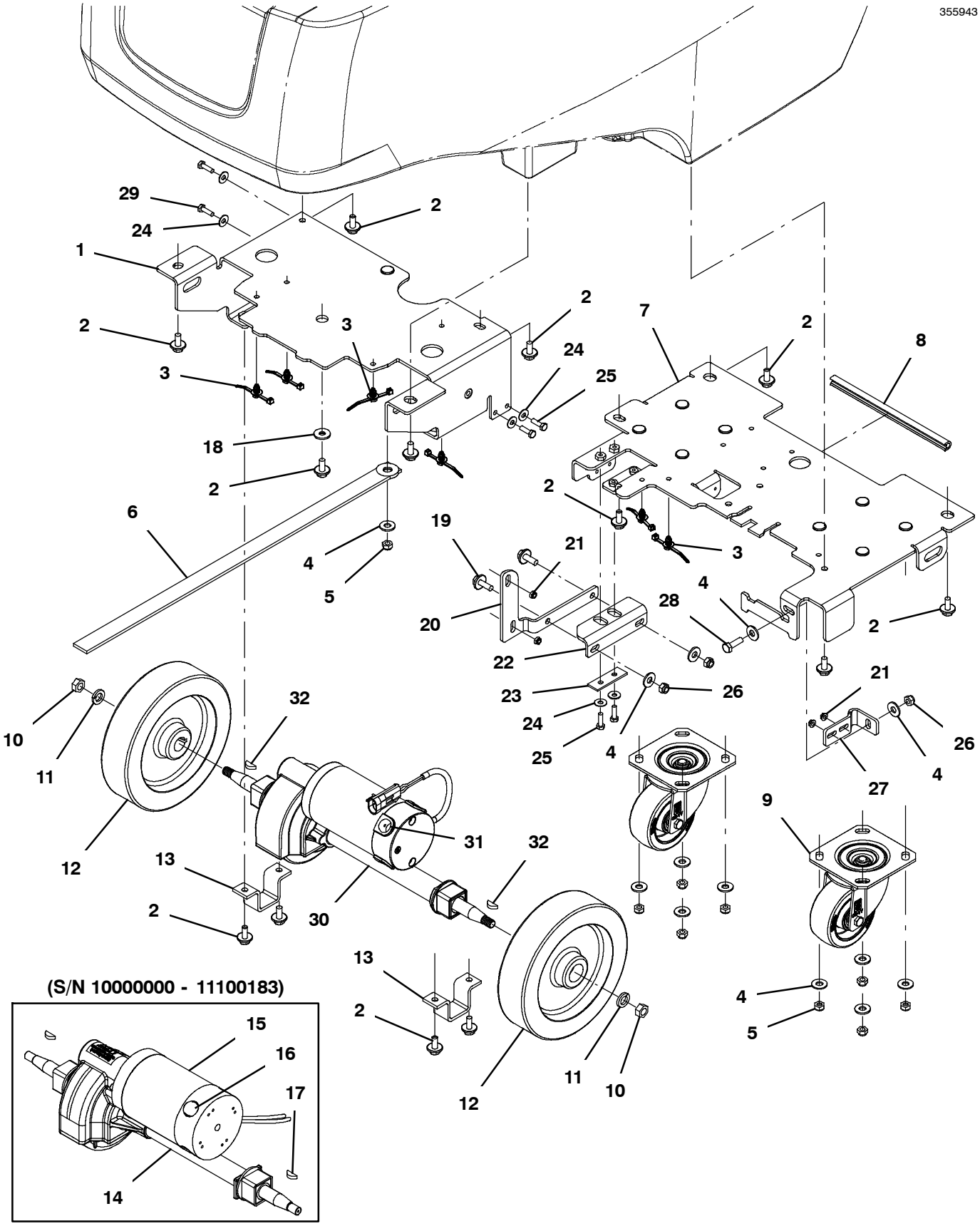

FRAME AND DRIVE GROUP (S/N 11064202 -)

	Ref.	Part No.	Serial Number	Description	Qty.
	1	1256615	(11064202-)	Frame Wldt, Front [T500]	1
	2	1020341	( )	Screw, Hex, M8 X 1.25 X 20, Ss, Sems	13
	3	1210807	( )	Wire, Tie [W/.25” Fir Tree Clip]	6
	4	01685	(11064202-)	Washer, Flat, 0.38b 0.88d .08, Ss	13
	5	08713	( )	Nut, Hex, Lock, M8 X 1.25, Nl, Ss	9
	6	71579	( )	Strap, Static, W/Grommet, .19 1.1w 25.0l	1
	7	1261154	(11064202-)	Frame Wldt, Rear [T500]	1
	7	1219137	(10000000- 11064201)	Frame Wldt, Rear [T500]	1
	8	1020168	( )	Molding, Afmkt, Trim, Pvc, .08 .11, 01ft	1
	9	1212422	( )	Caster, Swivel [Wicke 224051]	2
	10	09741	( )	Nut, Hex, Lock, M12 X 1.75, Nl, Ss	2
	11	140058	( )	Washer, Flat, 0.54b 0.88d .06, Ss [Wand]	2
	12	1223582	(11046266-)	Wheel, Scrbr, 8.00d, W/ Taper	2
	13	606001	( )	Bracket, Mtg, Transaxle, Pl [1510, T5]	2
∇	14	1220970	(10000000- 11100183)	Transaxle, Ele, 24vdc, 107rpm [Asi, 4] (Replaced By 1261401)	1
▲		612874	(10000000- 11100183)	Coupling, Transaxle, Replmt	1
▲		612880	(10000000- 11100183)	Joint, Transaxle, Replmt	1
▲∇	15	1031723	(10000000- 11100183)	Motor, Transaxle, 24vdc, Afmkt [T5]	1
▲▲	16	614166	(10000000- 11100183)	Brush Kit, Carbon, Transaxle, Replmt [4]	1
▲	17	1021167	( )	Key, Woodruff, 5mm	2
	18	39890	( )	Washer, Flat, M8, Fendr	1
	19	1072628	(11064202-)	Screw, Hex, M8 X 1.25 X 25, Ss, Sems	2
	20	1259657	(11064202-)	Bracket, Spanning Vert [T500]	1
	21	1040381	(11064202-)	Nut, Hex, Flng, M6 X 1.0, Ss [Serrated]	4
	22	1259658	(11064202-)	Bracket, Spanning Angle [T500]	1
	23	1260051	(11064202-)	Plate, Bracket, Spanning	1
	24	01684	(11064202-)	Washer, Flat, 0.27b 0.69d .05, Ss	5
	25	08716	(11064202-)	Screw, Hex, M6 X 1.00 X 20, Ss	2
	26	08713	(11064202-)	Nut, Hex, Lock, M8 X 1.25, Nl, Ss	3
	27	1256017	(11064202-)	Bracket, Spanning [T500]	1
	28	09010	(11064202-)	Screw, Hex, M8 X 1.25 X 25, Ss	1
	29	08716	(11064202-)	Screw, Hex, M6 X 1.00 X 20, Ss	2
∇	30	1261401	(11100184-)	Transaxle, Ele, 24vdc, 110rpm	1
▲	31	1261402	(11100184-)	Brush Set, Transaxle	1
▲	32	1021167	( )	Key, Woodruff, 5mm	2

∇ ASSEMBLY

▲ INCLUDED IN ASSEMBLY

FRAME AND DRIVE GROUP (S/N 10000000 - 11064201)

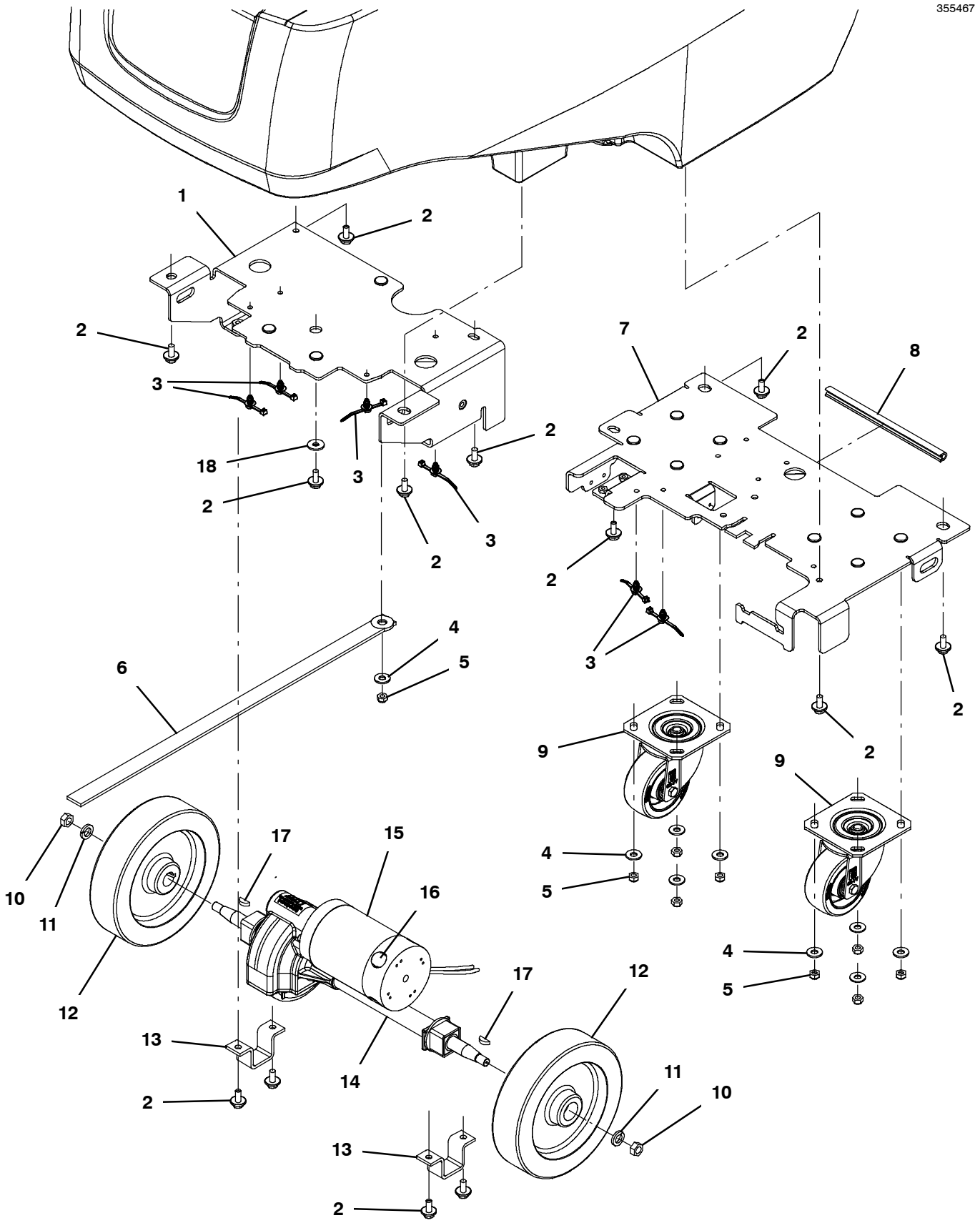

FRAME AND DRIVE GROUP (S/N 10000000 - 11064201)

(Note: Solution Tank Support Bracket Upgrade Kit Available, Tennant Part Number 9021792 Pages 148-149)

	Ref.	Part No.	Serial Number	Description	Qty.
	1	1256615	(11046266- 11064201)	Frame Wldt, Front [T500]	1
	1	1219118	(10000000- 11046265)	Frame Wldt, Front [T500]	1
	2	1020341	( )	Screw, Hex, M8 X 1.25 X 20, Ss, Sems	13
	3	1210807	( )	Wire, Tie [W/.25” Fir Tree Clip]	6
	4	01685	(10000000- 11064201)	Washer, Flat, 0.38b 0.88d .08, Ss	9
	5	08713	( )	Nut, Hex, Lock, M8 X 1.25, Nl, Ss	9
	6	71579	( )	Strap, Static, W/Grommet, .19 1.1w 25.0l	1
	7	1219137	(10000000- 11064201)	Frame Wldt, Rear [T500]	1
	8	1020168	( )	Molding, Afmkt, Trim, Pvc, .08 .11, 01ft	1
	9	1212422	( )	Caster, Swivel [Wicke 224051]	2
	10	09741	( )	Nut, Hex, Lock, M12 X 1.75, Nl, Ss	2
	11	140058	( )	Washer, Flat, 0.54b 0.88d .06, Ss [Wand]	2
	12	4037832	(11046266-)	Wheel, Scrbr, 8.00d, W/ Taper	2
	12	1223583	(10000000- 11046265)	Wheel, Scrbr, 213mm, W/ Taper	2
	13	606001	( )	Bracket, Mtg, Transaxle, Pl [1510, T5]	2
∇	14	1220970	(10000000- 11100183)	Transaxle, Ele, 24vdc, 107rpm [Asi, 4] (Replaced By 1261401)	1
▲		612874	(10000000- 11100183)	Coupling, Transaxle, Replmt	1
▲		612880	(10000000- 11100183)	Joint, Transaxle, Replmt	1
▲∇	15	1031723	(10000000- 11100183)	Motor, Transaxle, 24vdc, Afmkt [T5]	1
▲▲	16	614166	(10000000- 11100183)	Brush Kit, Carbon, Transaxle, Replmt [4]	1
▲	17	1021167	( )	Key, Woodruff, 5mm	2
	18	39890	( )	Washer, Flat, M8, Fendr	1

∇ ASSEMBLY

▲ INCLUDED IN ASSEMBLY

HEAD LIFT GROUP, DISK

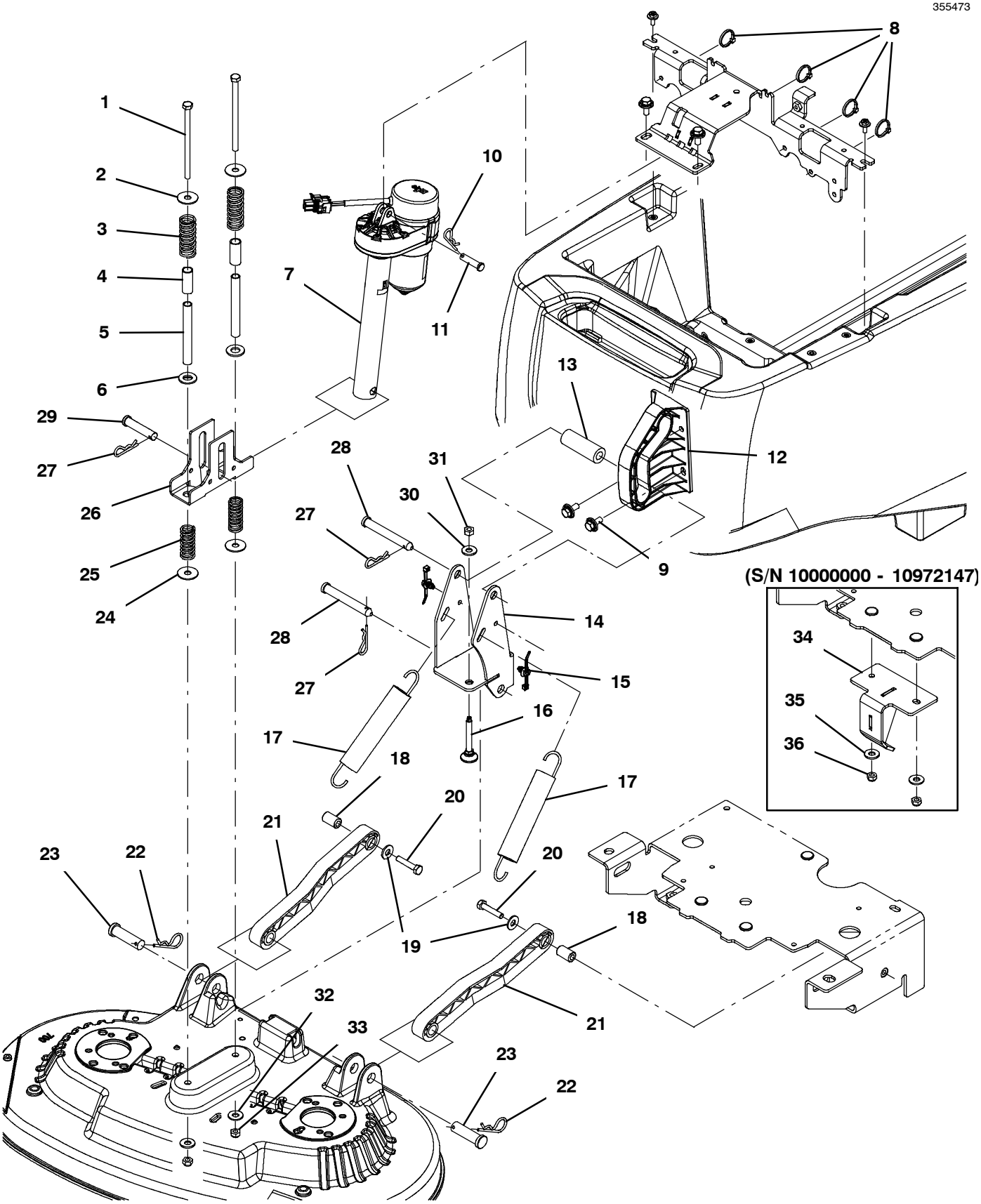

HEAD LIFT GROUP, DISK

Ref.	Part No.	Serial Number	Description	Qty.
1	387431	( )	Screw, Hex, M8 X 1.25 X 130, Ss	2
2	32662	( )	Washer, Flat, 0.38b 1.22d .06, Ss	2
3	45261	( )	Spring, Cmpr, 0.97od .11wir 02.5l	2
4	1224334	( )	Sleeve, P/M, 0.51b 0.63d 1.5l, Pl	2
5	1219491	( )	Sleeve, 0.40id .50d 4.25l, Ss	2
6	32486	( )	Washer, Flat, 0.53b 1.06d .10, Stl, Pl	2
7	4019026	( )	Actuator Kit, Replmt, 24vdc, 7.0 Strk	1
8	49263	( )	Tie, Cable, Nyl, 11.4l .19w 3.0 Max D	5
9	1020341	( )	Screw, Hex, M8 X 1.25 X 20, Ss, Sems	4
10	140626	( )	Pin, Cotter, Hair, 0.25d .125 Wir	1
11	29558	( )	Pin, Clevis, 0.37d X 1.50l	1
12	1219912	( )	Bracket, Guide, Head[T500]	1
13	1220305	( )	Tube, Plstc, 0.51id 0.98od 02.8l	1
14	1221507	( )	Pivot Wldt, Head, Scrub [T500]	1
15	1210807	( )	Wire, Tie [W/.25” Fir Tree Clip]	2
16	1227530	( )	Screw, Leveler, M8x75	1
17	222363	( )	Spring, Extn, 1.23od 0.15wir 06.5l	2
18	606056	( )	Tube, 0.32id 0.62od 01.0l, Stl, Pl	2
19	01685	( )	Washer, Flat, 0.38b 0.88d .08, Ss	2
20	74440	( )	Screw, Hex, M8 X 1.25 X 40, Nl, Ss	2
21	222027	( )	Arm, Lift, Head	2
22	02942	( )	Pin, Hair, Cotter, 0.62d .120 Wir	2
23	222210	( )	Pin, Clevis, 0.62d X 2.12l	2
24	32662	( )	Washer, Flat, 0.38b 1.22d .06, Ss	2
25	63185	( )	Spring, Cmpr, 0.85od .09wir 02.0l	2
26	1224191	( )	Bracket, Spring, Suspension, Head	1
27	140626	( )	Pin, Cotter, Hair, 0.25d .125 Wir	3
28	374225	( )	Pin, Clevis, 0.50d X 3.75l	2
29	11211	( )	Pin, Clevis, 0.50d X 2.25l	1
30	01685	( )	Washer, Flat, 0.38b 0.88d .08, Ss	1
31	07786	( )	Nut, Hex, Std, M8 X 1.25, Ss	1
32	01685	( )	Washer, Flat, 0.38b 0.88d .08, Ss	2
33	08713	( )	Nut, Hex, Lock, M8 X 1.25, Nl, Ss	2
34	1222374	(10000000- 10972147)	Frame Wldt, Hardstop [T500] (No Longer Available)	1
35	01685	(10000000- 10972147)	Washer, Flat, 0.38b 0.88d .08, Ss	2
36	08713	(10000000- 10972147)	Nut, Hex, Lock, M8 X 1.25, Nl, Ss	2

HEAD LIFT GROUP, CYLINDRICAL

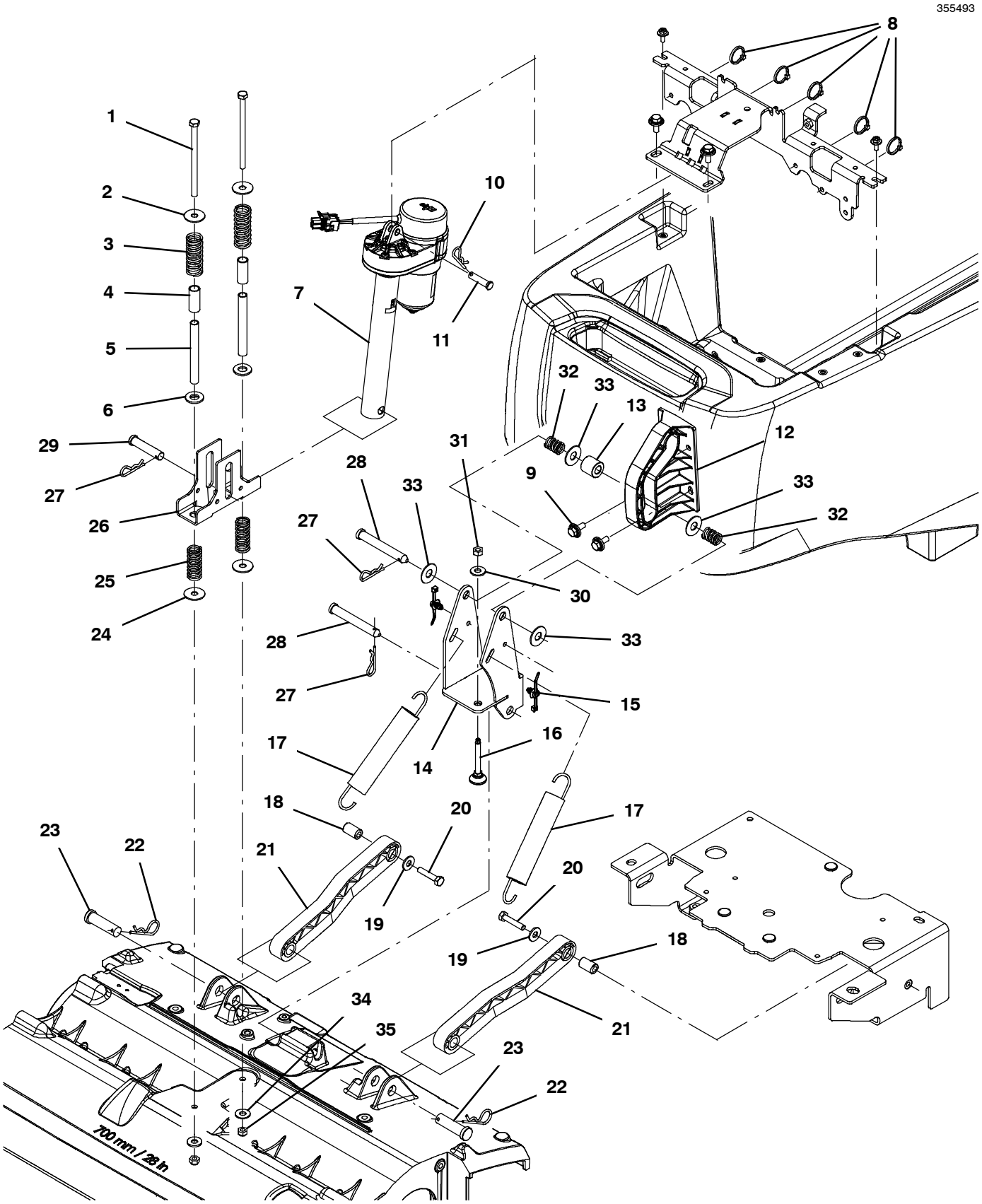

HEAD LIFT GROUP, CYLINDRICAL

Ref.	Part No.	Serial Number	Description	Qty.
1	387431	( )	Screw, Hex, M8 X 1.25 X 130, Ss	2
2	32662	( )	Washer, Flat, 0.38b 1.22d .06, Ss	2
3	45261	( )	Spring, Cmpr, 0.97od .11wir 02.5l	2
4	1224334	( )	Sleeve, P/M, 0.51b 0.63d 1.5l, Pl	2
5	1219491	( )	Sleeve, 0.40id .50d 4.25l, Ss	2
6	32486	( )	Washer, Flat, 0.53b 1.06d .10, Stl, Pl	2
7	4019026	( )	Actuator Kit, Replmt, 24vdc, 7.0 Strk	1
8	49263	( )	Tie, Cable, Nyl, 11.4l .19w 3.0 Max D	5
9	1020341	( )	Screw, Hex, M8 X 1.25 X 20, Ss, Sems	4
10	140626	( )	Pin, Cotter, Hair, 0.25d .125 Wir	1
11	29558	( )	Pin, Clevis, 0.37d X 1.50l	1
12	1219912	( )	Bracket, Guide, Head[T500]	1
13	1014020	( )	Roller, 0.99d 0.50b 0.95l, Acetal	1
14	1221507	( )	Pivot Wldt, Head, Scrub [T500]	1
15	1210807	( )	Wire, Tie [W/.25” Fir Tree Clip]	2
16	1227530	( )	Screw, Leveler, M8x75	1
17	222363	( )	Spring, Extn, 1.23od 0.15wir 06.5l	2
18	606056	( )	Tube, 0.32id 0.62od 01.0l, Stl, Pl	2
19	01685	( )	Washer, Flat, 0.38b 0.88d .08, Ss	2
20	74440	( )	Screw, Hex, M8 X 1.25 X 40, Nl, Ss	2
21	222027	( )	Arm, Lift, Head	2
22	02942	( )	Pin, Hair, Cotter, 0.62d .120 Wir	2
23	222210	( )	Pin, Clevis, 0.62d X 2.12l	2
24	32662	( )	Washer, Flat, 0.38b 1.22d .06, Ss	2
25	63185	( )	Spring, Cmpr, 0.85od .09wir 02.0l	2
26	1224191	( )	Bracket, Spring, Suspension, Head	1
27	140626	( )	Pin, Cotter, Hair, 0.25d .125 Wir	3
28	374225	( )	Pin, Clevis, 0.50d X 3.75l	2
29	11211	( )	Pin, Clevis, 0.50d X 2.25l	1
30	01685	( )	Washer, Flat, 0.38b 0.88d .08, Ss	1
31	07786	( )	Nut, Hex, Std, M8 X 1.25, Ss	1
32	607920	( )	Spring, Cmpr, 0.70od .10wir 01.0l, Mw	2
33	140045	( )	Washer, Flat, 0.51b 1.25d .06, Ss	4
34	01685	( )	Washer, Flat, 0.38b 0.88d .08, Ss	2
35	08713	( )	Nut, Hex, Lock, M8 X 1.25, Nl, Ss	2

HEAD LIFT GROUP, ORBITAL

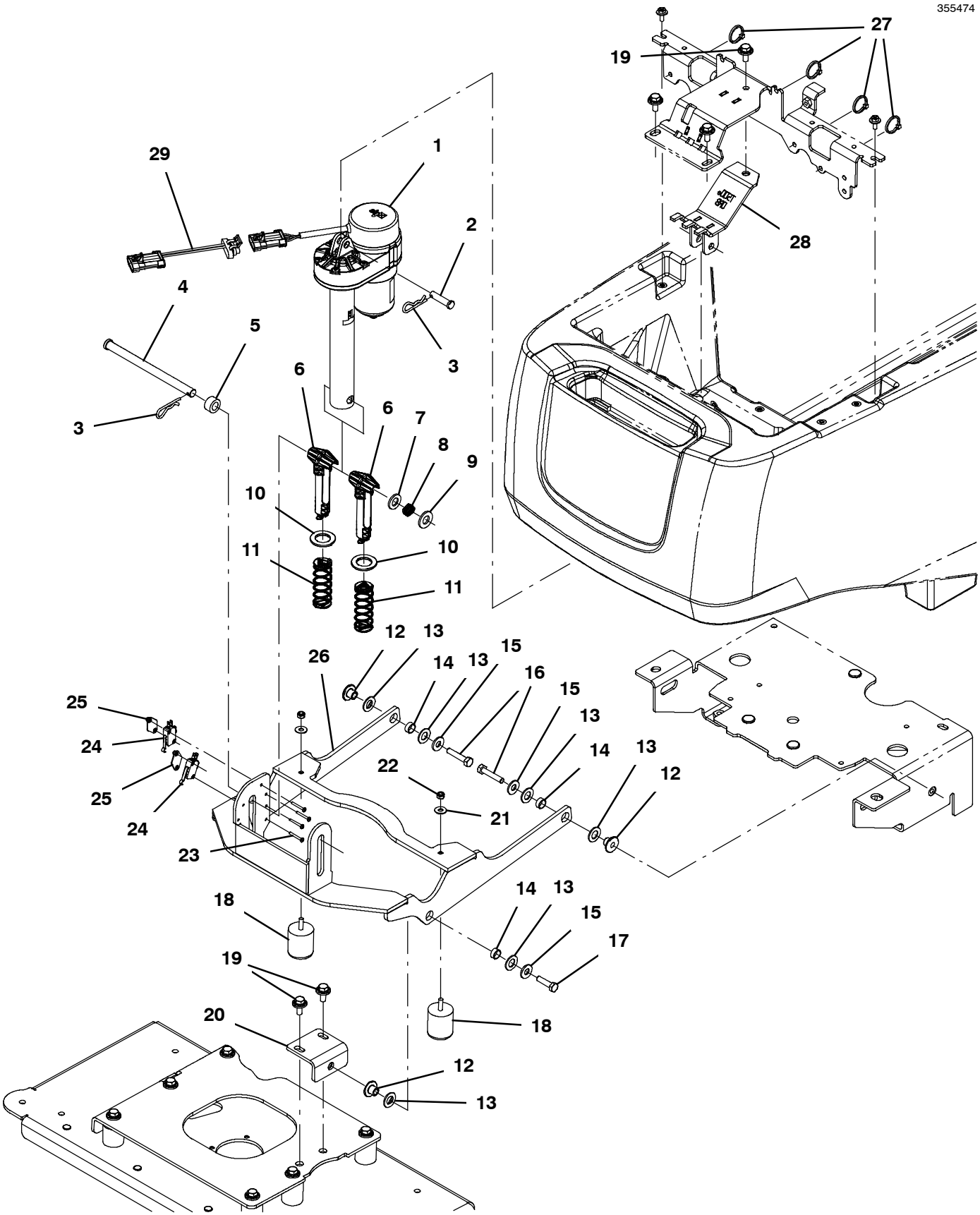

HEAD LIFT GROUP, ORBITAL

Ref.	Part No.	Serial Number	Description	Qty.
1	4019026	( )	Actuator Kit, Replmt, 24vdc, 7.0 Strk	1
2	29558	( )	Pin, Clevis, 0.37d X 1.50l	1
3	140626	( )	Pin, Cotter, Hair, 0.25d .125 Wir	1
4	1226754	( )	Pin, Clevis, .50d X 7.00l	1
5	1226759	( )	Spacer, .500 Id X .875 Od	1
6	1224233	( )	Pin, Guide, Spring, Head	2
7	1013936	( )	Washer, Flat, 0.51b 0.94d .10, Nyl	1
8	1226640	( )	Spring, Wave, .512 Id X .709 Od X .375	1
9	32486	( )	Washer, Flat, 0.53b 1.06d .10, Stl, Pl	1
10	1225960	( )	Washer, Thrust, 0.89b 1.50d 0.13w, Bnz	2
11	1227036	( )	Spring, Cmpr, 1.10od .085wir 03.0l	2
12	1059990	( )	Sleeve, Flng, 0.32b 1.00/0.50d 0.6l, Ss	3
13	608562	( )	Washer, Flat, 0.51b 0.94d .06, Nyl	6
14	630188	( )	Bearing, Journal, .50id X .25l	3
15	01685	( )	Washer, Flat, 0.38b 0.88d .08, Ss	3
16	74440	( )	Screw, Hex, M8 X 1.25 X 40, Nl, Ss	2
17	1016399	( )	Screw, Hex, M8 X 1.25 X 30, Nl, Ss	1
18	1212543	( )	Isolator, Neoprene, 1.25” X 1.25”, M8	2
19	1020341	( )	Screw, Hex, M8 X 1.25 X 20, Ss, Sems	3
20	1224295	( )	Brkt Wldt, Lift	1
21	01685	( )	Washer, Flat, 0.38b 0.88d .08, Ss	2
22	08713	( )	Nut, Hex, Lock, M8 X 1.25, Nl, Ss	2
23	33933	( )	Screw, Pan, Phl, M3 X 0.50 X 25, Ss	6
24	1215716	( )	Switch, 0.1a, Spdt[Micro, Gold Contacts]	2
25	1013705	( )	Plate, Thread, Switch, M3 Nut, 96hr Pl	2
26	1221043	( )	Arm Wldt, Lift	1
27	49263	( )	Tie, Cable, Nyl, 11.4l .19w 3.0 Max D	5
28	1225990	( )	Bracket Wldt, Mount, Actuator[T500e]	1
29	1076557	(10959723-)	Harness, Ele [Adaptor, Delphi, 4pos.]	1

LOWER CONSOLE GROUP, ON-BOARD CHARGER, WET AND AGM BATTERY

355462

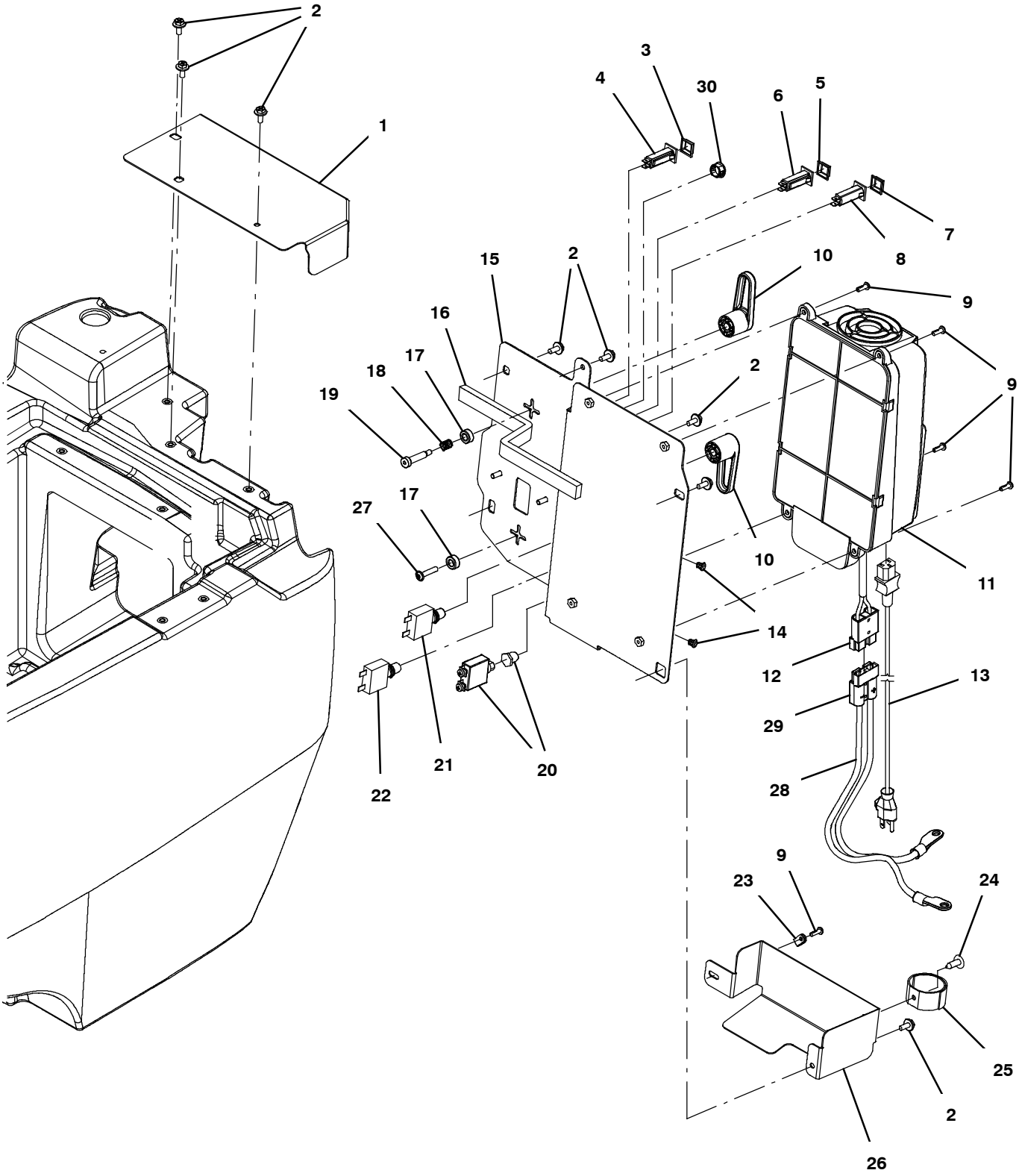

LOWER CONSOLE GROUP, ON- BOARD CHARGER, WET AND AGM BATTERY

	Ref.	Part No.	Serial Number	Description	Qty.
	1	1225401	( )	Bracket, Cover, Charger	1
	2	1034731	( )	Screw, Hex, M6 X 1.00 X 16, Sems, Ss	8
	3	1064191	( )	Boot, Circuitbreaker	1
	4	1208816	( )	Circuitbreaker, 04.0a, Resetable (Key Switch)	1
	5	1064191	( )	Boot, Circuitbreaker	1
	6	1064187	( )	Circuitbreaker, 10.0a, Resetable (Actuator)	1
	7	1064191	( )	Boot, Circuitbreaker	1
	8	1064189	( )	Circuitbreaker, 20.0a, Resetable (Vacuum Fan)	1
	9	1205799	( )	Screw, Btn, M5 X 0.8 X 16, 8.8, Nl, Torx	5
	10	1205496	( )	Hook, Cord	2
∇	11	1250046	(10978950-)	Charger, 24vdc 25a 100- 240vac [On- Board]	1
∇	11	1220856	(10000000- 10978949)	Charger, 24vdc 25a 115- 240vac [On- Board] (Replaced By 1250046)	1
▲	12	605387	( )	Connector, Anderson, 050a, Red [W/O Con]	1
	13	1025642	( )	Cord, Power, 16/3, 15ft Blk [Us]	1
	13	1026330	( )	Cord, Power, 1.0mm2 [2.5meter]	1
	13	1026325	( )	Cord, Power, 1.0mm2/3 Blk[2.5meter, Aus]	1
	13	1048304	( )	Cord, Power [4.5meter, India, S.Africa]	1
	14	1202868	( )	Clip, Tie, 0.25d, Plstc	2
	15	1225019	( )	Bracket Wldt, Charger	1
	16	1046428	( )	Seal, Afmkt, Rbr, Clsd, Adh, 02ft	1
	17	1014668	( )	Bushing, Sleeve, 8mmb 12mmd 6mml	2
	18	611311	(10982634-)	Spring, Cmpr, 0.40od .05wir 00.5l, Pl,Mw	1
	18	611311	(10000000- 10982633)	Spring, Cmpr, 0.40od .05wir 00.5l, Pl,Mw	2
	19	1024965	(10982634-)	Bolt, Shld, 08mmd X 030mm, M06 X 1.0	1
	19	1024965	(10000000- 10982633)	Bolt, Shld, 08mmd X 030mm, M06 X 1.0	2
	20	383729	( )	Circuitbreaker, 60.0a (I- Drive)	1
	21	383724	( )	Circuitbreaker, 25.0a, Resetable (Left Scrub Motor)	1
	22	383724	( )	Circuitbreaker, 25.0a, Resetable (Right Scrub Motor)	1
	23	26395- 2	( )	Clamp, Cable, Stl, 0.38d X 0.38w, 1hole	1
	24	140262	( )	Clip, Snap- In	1
	25	1059534	( )	Fastener, 09.00l [Hook & Loop]	1
	26	1224589	( )	Bracket, Cover, Charger Cables	1
	27	1248098	(10982634-)	Screw, Btn, Flng, M6 X 1.0 X 30, 10.9	1
∇	28	1073634	( )	Harness, Chrgr, 12ga [M8 Ring/M8 Ring]	1
▲	29	605387	( )	Connector, Anderson, 050a, Red [W/O Con]	1
	30	1058340	( )	Plug, Hole, Rnd, 0.63h 0.1l, Blk (Models w/out ec- H2O / ABW Option)	1

∇ ASSEMBLY

▲ INCLUDED IN ASSEMBLY

LOWER CONSOLE GROUP, ON-BOARD CHARGER, TPPL BATTERY

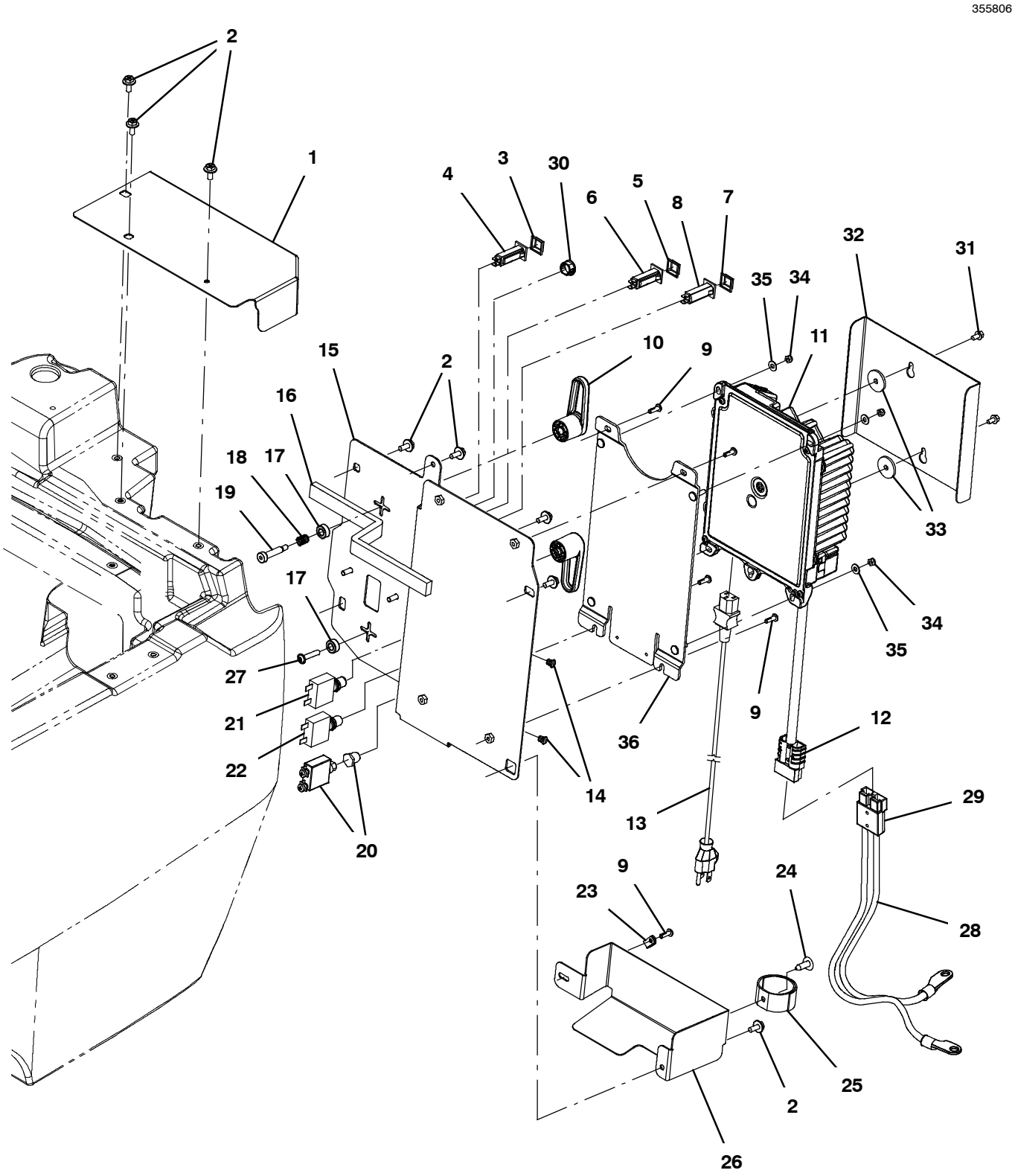

LOWER CONSOLE GROUP, ON-BOARD CHARGER, TPPL BATTERY

	Ref.	Part No.	Serial Number	Description	Qty.
	1	1225401	( )	Bracket, Cover, Charger	1
	2	1034731	( )	Screw, Hex, M6 X 1.00 X 16, Sems, Ss	8
	3	1064191	( )	Boot, Circuitbreaker	1
	4	1208816	( )	Circuitbreaker, 04.0a, Resetable (Key Switch)	1
	5	1064191	( )	Boot, Circuitbreaker	1
	6	1064187	( )	Circuitbreaker, 10.0a, Resetable (Actuator)	1
	7	1064191	( )	Boot, Circuitbreaker	1
	8	1064189	( )	Circuitbreaker, 20.0a, Resetable (Vacuum Fan)	1
	9	1205799	( )	Screw, Btn, M5 X 0.8 X 16, 8.8, Nl, Torx	9
	10	1205496	( )	Hook, Cord	2
∇	11	1261728	( )	Charger, 24vdc, 650w,100-240vac [On Brd]	1
▲	12	605387	( )	Connector, Anderson, 050a, Red [W/O Con]	1
∇	11	1254123	( )	Charger, 24vdc, 650w,100-240vac [On Brd] (Replaced By 1261728)	1
▲	12	605387	( )	Connector, Anderson, 050a, Red [W/O Con]	1
	13	1025642	( )	Cord, Power, 16/3, 15ft Blk [Us]	1
	13	1026330	( )	Cord, Power, 1.0mm2 [2.5meter]	1
	13	1026325	( )	Cord, Power, 1.0mm2/3 Blk[2.5meter, Aus]	1
	13	1048304	( )	Cord, Power [4.5meter, India, S.Africa]	1
	14	1202868	( )	Clip, Tie, 0.25d, Plstc	2
	15	1225019	( )	Bracket Wldt, Charger	1
	16	1046428	( )	Seal, Afmkt, Rbr, Clsd, Adh, 02ft	1
	17	1014668	( )	Bushing, Sleeve, 8mmb 12mmd 6mml	2
	18	611311	(10982634-)	Spring, Cmpr, 0.40od .05wir 00.5l, Pl,Mw	1
	18	611311	(10000000-10982633)	Spring, Cmpr, 0.40od .05wir 00.5l, Pl,Mw	2
	19	1024965	(10982634-)	Bolt, Shld, 08mmd X 030mm, M06 X 1.0	1
	19	1024965	(10000000-10982633)	Bolt, Shld, 08mmd X 030mm, M06 X 1.0	2
	20	383729	( )	Circuitbreaker, 60.0a (I-Drive)	1
	21	383724	( )	Circuitbreaker, 25.0a, Resetable (Left Scrub Motor)	1
	22	383724	( )	Circuitbreaker, 25.0a, Resetable (Right Scrub Motor)	1
	23	26395-2	( )	Clamp, Cable, Stl, 0.38d X 0.38w, 1hole	1
	24	140262	( )	Clip, Snap-In	1
	25	1059534	( )	Fastener, 09.00l [Hook & Loop]	1
	26	1224589	( )	Bracket, Cover, Charger Cables	1
	27	1248098	(10982634-)	Screw, Btn, Flng, M6 X 1.0 X 30, 10.9	1
∇	28	1073634	( )	Harness, Chrgr, 12ga [M8 Ring/M8 Ring]	1
▲	29	605387	( )	Connector, Anderson, 050a, Red [W/O Con]	1
	30	1058340	( )	Plug, Hole, Rnd, 0.63h 0.1l, Blk (Models w/out ec-H2O / ABW Option)	1
	31	223198	( )	Screw, Hex, M5 X 0.80 X 10, Fmg	2
	32	1255115	( )	Cover, Charger, Front	1
	33	386063	( )	Washer, Flat, 0.25b 1.12d .12, Ss	2
	34	06549	( )	Nut, Hex, M5 X 0.80 X 16, 8.8	4
	35	01683	( )	Washer, Flat, 10, Ss	4
	36	1254600	( )	Plate Wldt, Charger, Adapter	1

LOWER CONSOLE GROUP, ON-BOARD CHARGER 650W, LITHIUM-ION BATTERY

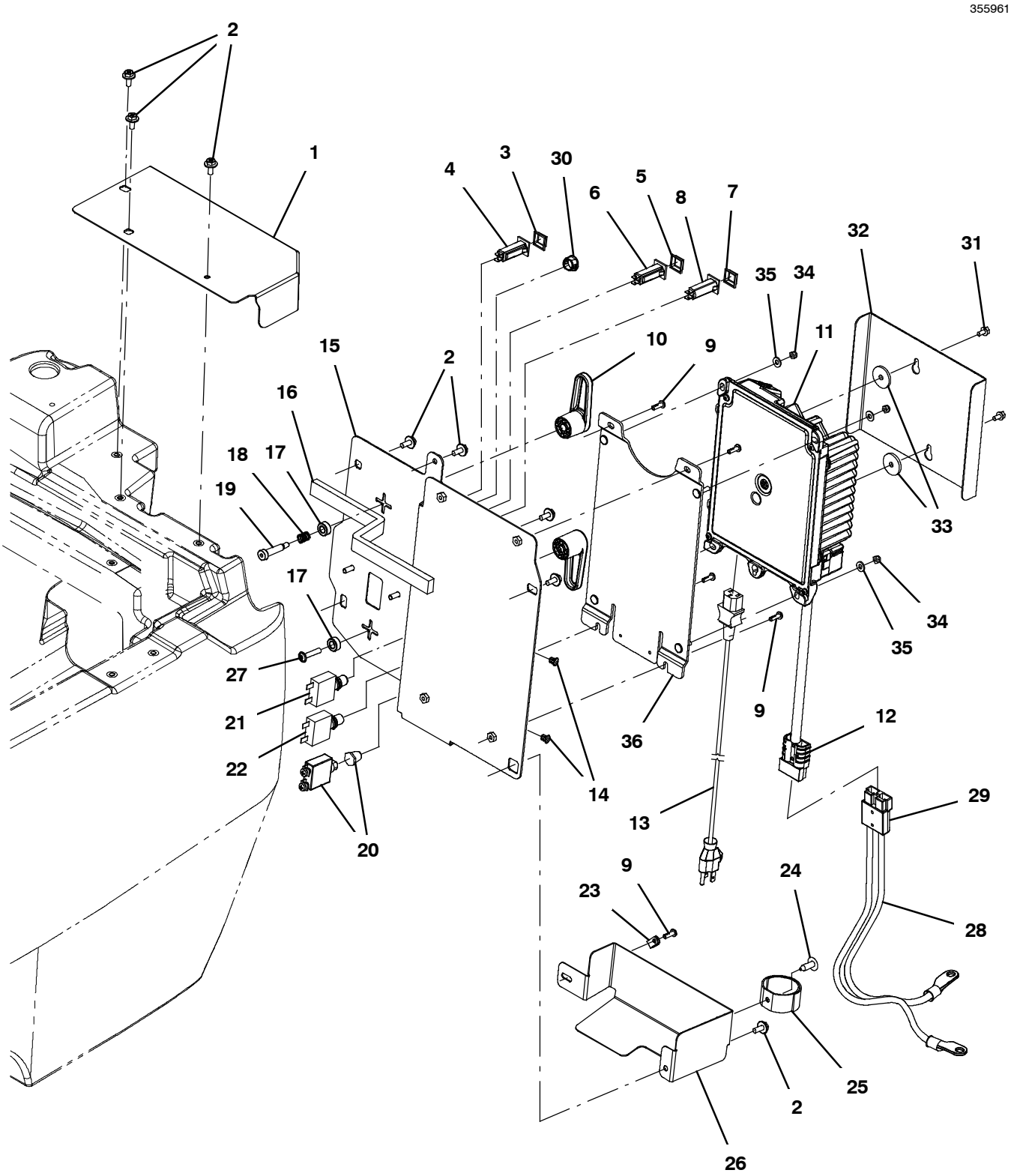

LOWER CONSOLE GROUP, ON-BOARD CHARGER 650W, LITHIUM-ION BATTERY

	Ref.	Part No.	Serial Number	Description	Qty.
	1	1225401	( )	Bracket, Cover, Charger	1
	2	1034731	( )	Screw, Hex, M6 X 1.00 X 16, Sems, Ss	8
	3	1064191	( )	Boot, Circuitbreaker	1
	4	1208816	( )	Circuitbreaker, 04.0a, Resetable (Key Switch)	1
	5	1064191	( )	Boot, Circuitbreaker	1
	6	1064187	( )	Circuitbreaker, 10.0a, Resetable (Actuator)	1
	7	1064191	( )	Boot, Circuitbreaker	1
	8	1064189	( )	Circuitbreaker, 20.0a, Resetable (Vacuum Fan)	1
	9	1205799	( )	Screw, Btn, M5 X 0.8 X 16, 8.8, Nl, Torx	9
	10	1205496	( )	Hook, Cord	2
∇	11	1261728	( )	Charger, 24vdc, 650w,100-240vac [On Brd]	1
▲	12	605387	( )	Connector, Anderson, 050a, Red [W/O Con]	1
	13	1025642	( )	Cord, Power, 16/3, 15ft Blk [Us]	1
	13	1026330	( )	Cord, Power, 1.0mm2 [2.5meter]	1
	13	1026325	( )	Cord, Power, 1.0mm2/3 Blk[2.5meter, Aus]	1
	13	1048304	( )	Cord, Power [4.5meter, India, S.Africa]	1
	14	1202868	( )	Clip, Tie, 0.25d, Plstc	2
	15	1225019	( )	Bracket Wldt, Charger	1
	16	1046428	( )	Seal, Afmkt, Rbr, Clsd, Adh, 02ft	1
	17	1014668	( )	Bushing, Sleeve, 8mmb 12mmd 6mml	2
	18	611311	(10982634-)	Spring, Cmpr, 0.40od .05wir 00.5l, Pl,Mw	1
	19	1024965	(10982634-)	Bolt, Shld, 08mmd X 030mm, M06 X 1.0	1
	20	383729	( )	Circuitbreaker, 60.0a (I-Drive)	1
	21	383724	( )	Circuitbreaker, 25.0a, Resetable (Left Scrub Motor)	1
	22	383724	( )	Circuitbreaker, 25.0a, Resetable (Right Scrub Motor)	1
	23	26395-2	( )	Clamp, Cable, Stl, 0.38d X 0.38w, 1hole	1
	24	140262	( )	Clip, Snap-In	1
	25	1059534	( )	Fastener, 09.00l [Hook & Loop]	1
	26	1224589	( )	Bracket, Cover, Charger Cables	1
	27	1248098	(10982634-)	Screw, Btn, Flng, M6 X 1.0 X 30, 10.9	1
∇	28	1267308	( )	Harness, Chrgr, 10ga [M8 Ring/M8ring]	1
▲	29	605387	( )	Connector, Anderson, 050a, Red [W/O Con]	1
	30	1058340	( )	Plug, Hole, Rnd, 0.63h 0.1l, Blk (Models w/out ec-H2O / ABW Option)	1
	31	223198	( )	Screw, Hex, M5 X 0.80 X 10, Fmg	2
	32	1255115	( )	Cover, Charger, Front	1
	33	386063	( )	Washer, Flat, 0.25b 1.12d .12, Ss	2
	34	06549	( )	Nut, Hex, M5 X 0.80 X 16, 8.8	4
	35	01683	( )	Washer, Flat, 10, Ss	4
	36	4208974	( )	Plate Wldt, Charger, Adapter	1

∇ ASSEMBLY

▲ INCLUDED IN ASSEMBLY

LOWER CONSOLE GROUP, OFF- BOARD CHARGER

355461

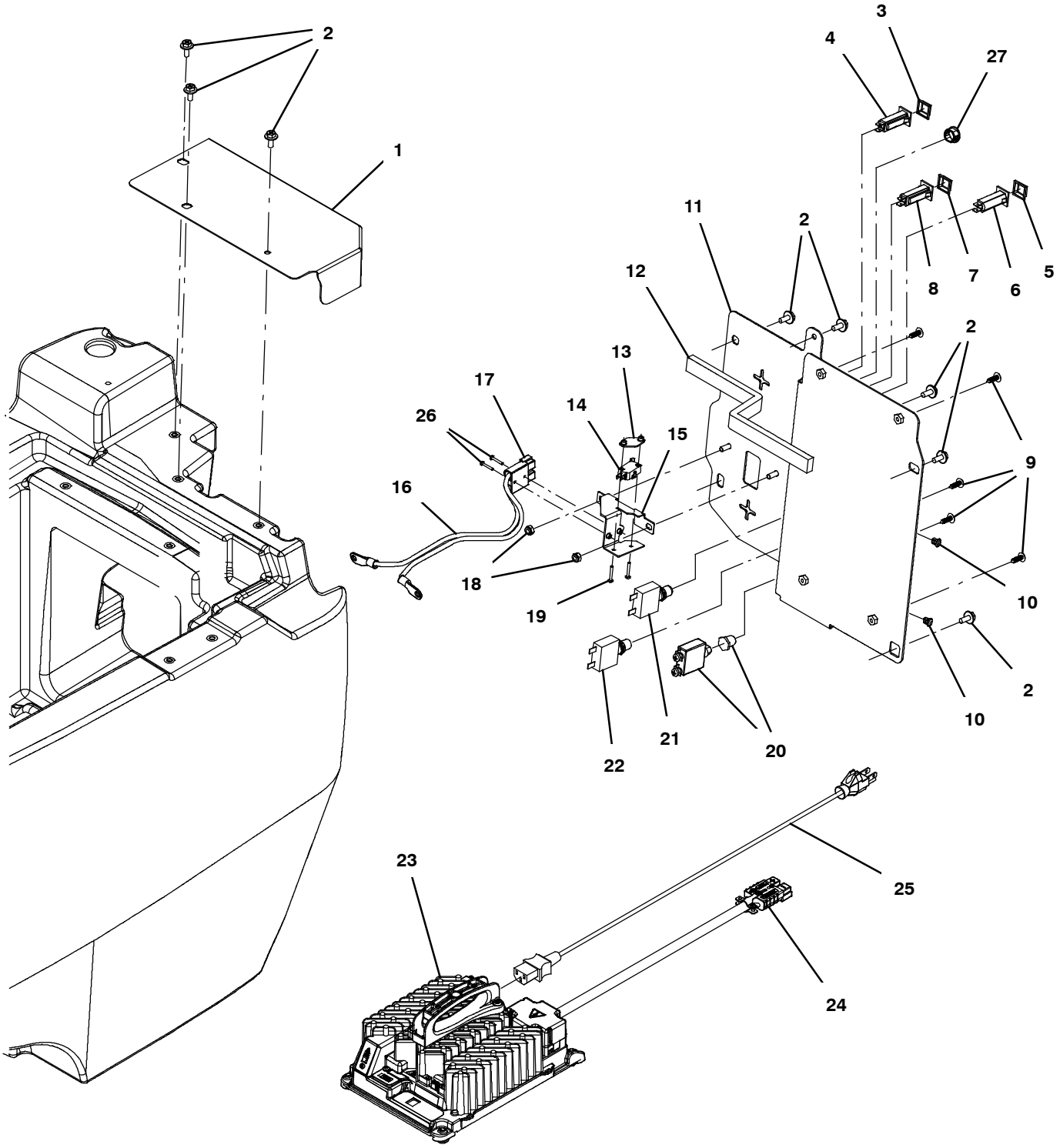

LOWER CONSOLE GROUP, OFF- BOARD CHARGER

	Ref.	Part No.	Serial Number	Description	Qty.
	1	1225401	( )	Bracket, Cover, Charger	1
	2	1034731	( )	Screw, Hex, M6 X 1.00 X 16, Sems, Ss	8
	3	1064191	( )	Boot, Circuitbreaker	1
	4	1208816	( )	Circuitbreaker, 04.0a, Resetable (Key Switch)	1
	5	1064191	( )	Boot, Circuitbreaker	1
	6	1064187	( )	Circuitbreaker, 10.0a, Resetable (Actuator)	1
	7	1064191	( )	Boot, Circuitbreaker	1
	8	1064189	( )	Circuitbreaker, 20.0a, Resetable (Vacuum Fan)	1
	9	397780	( )	Plug, Hole, Rnd, 0.19h 0.7l, Brb, Plstc	5
	10	1202868	( )	Clip, Tie, 0.25d, Plstc	2
	11	1225019	( )	Bracket Wldt, Charger	1
	12	1046428	( )	Seal, Afmkt, Rbr, Clsd, Adh, 02ft	1
	13	1013705	( )	Plate, Thread, Switch, M3 Nut, 96hr Pl	1
	14	1215716	( )	Switch, 0.1a, Spdt[Micro, Gold Contacts]	1
	15	1225158	( )	Bracket Assy, Charger Plug	1
∇	16	1073634	( )	Harness, Chrgr, 12ga [M8 Ring/M8 Ring] (Wet & AGM Batteries)	1
▲	17	605387	( )	Connector, Anderson, 050a, Red [W/O Con]	1
∇	16	1267308	( )	Harness, Chrgr, 10ga [M8 Ring/M8 Ring] (Lithium- Ion Batteries)	1
▲	17	605387	( )	Connector, Anderson, 050a, Red [W/O Con]	1
	18	08712	( )	Nut, Hex, Lock, M6 X 1.00, Nl, Ss	2
	19	06922	( )	Screw, Pan, Phl, M3 X 0.50 X 20, 4.8	2
	20	383729	( )	Circuitbreaker, 60.0a (I- Drive)	1
	21	383724	( )	Circuitbreaker, 25.0a, Resetable (Left Scrub Motor)	1
	22	383724	( )	Circuitbreaker, 25.0a, Resetable (Right Scrub Motor)	1
∇	23	9015391	( )	Charger Assy, Off- Board [T500/T500e] (Wet & AGM Batteries)	1
▲	24	605387	( )	Connector, Anderson, 050a, Red [W/O Con]	1
∇	23	9021961	( )	Charger, Replmt, Li- Ion, 24v, 650w (Lithium- Ion Batteries)	1
▲	24	605387	( )	Connector, Anderson, 050a, Red [W/O Con]	1
	25	1025642	( )	Cord, Power, 16/3, 15ft Blk [Us]	1
	25	1026330	( )	Cord, Power, 1.0mm2 [2.5meter] (China)	1
	25	1026325	( )	Cord, Power, 1.0mm2/3 Blk[2.5meter, Aus]	1
	25	1048304	( )	Cord, Power [4.5meter, India, S.Africa]	1
	26	06922	( )	Screw, Pan, Phl, M3 X 0.50 X 20, 4.8	2
	27	1058340	( )	Plug, Hole, Rnd, 0.63h 0.1l, Blk (Models w/out ec- H2O / ABW Option)	1

∇ ASSEMBLY

▲ INCLUDED IN ASSEMBLY

CONSOLE GROUP, PROPEL

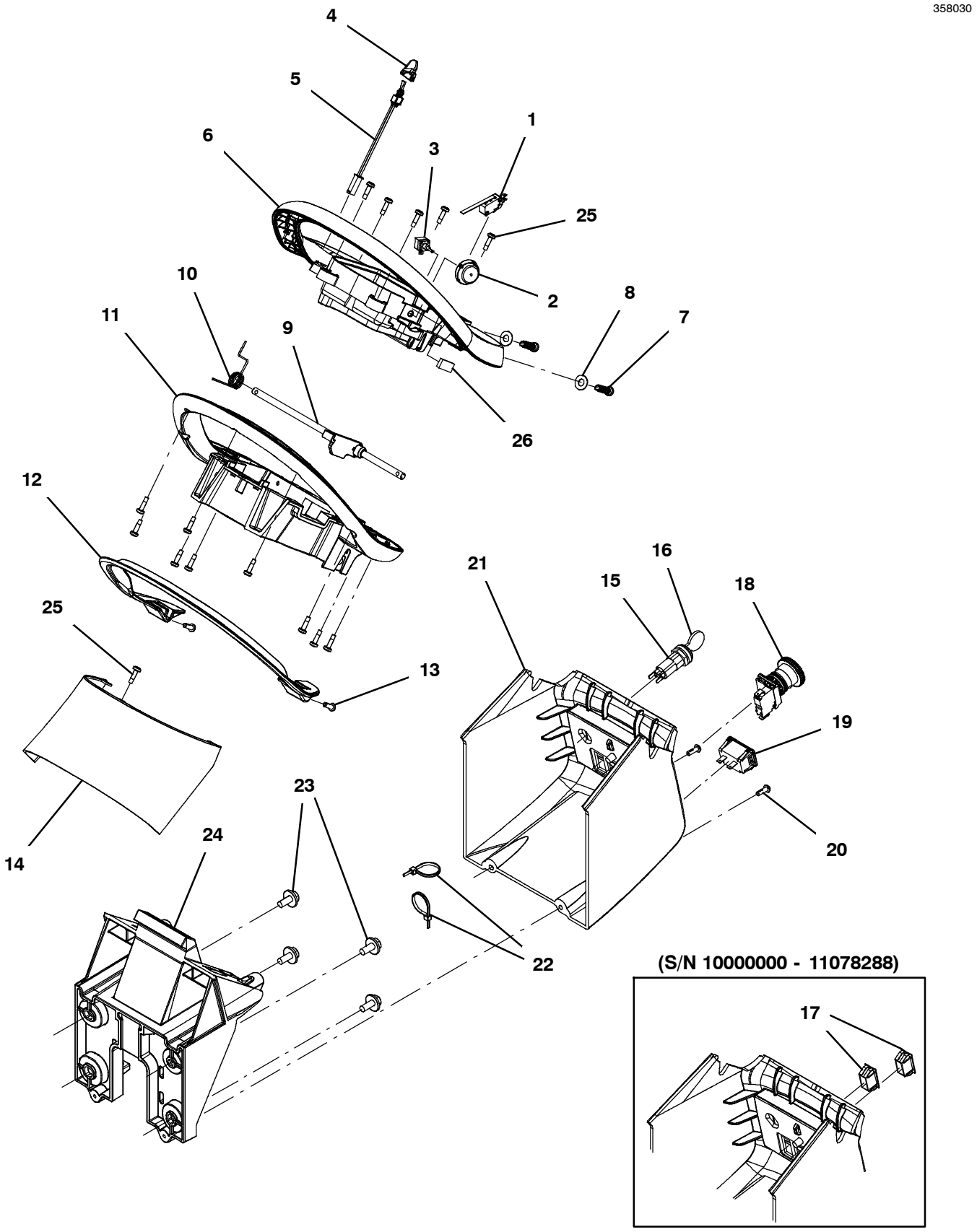

CONSOLE GROUP, PROPEL

	Ref.	Part No.	Serial Number	Description	Qty.
	1	1205323	( )	Switch, 0.1a, Spdt [Micro, Straight]	1
	2	1234365	( )	Dial, Range, Speed	1
	3	1256757	(11008828-)	Potentiometer [100k, 1 Turn, Multi- Mach]	1
	3	1246392	(10947727- 11008827)	Potentiometer [100k, 1 Turn, B5/B7] (Rpld by 1256757)	1
	3	1204930	(10000000- 10947726)	Potentiometer [100k, 1 Turn, B5/B7] (Rpld by 1256757)	1
	4	1209730	( )	Cap, Toggle, Direction	1
	5	1209673	( )	Switch Assy, Toggle, Direction	1
	6	1203787	( )	Housing, Handle, Cntrl, Top	2
	7	1215863	( )	Screw, Pan, Torx, M8 X 3.5 X 25[Remform]	2
	8	140027	( )	Washer, Flat, 0.35b 0.75d .04, Ss	2
	9	1205143	( )	Shaft Assy, Bail, Handle	1
	10	1205781	( )	Spring, Return, Bail	1
	11	1222608	( )	Housing, Handle, Cntrl, Bottom, Slotted	1
	12	1205778	( )	Handle, Bail [Machined]	1
	13	1205799	( )	Screw, Btn, M5 X 0.8 X 16, 8.8, Nl, Torx	2
	14	1207004	( )	Cover, Handle, Cntrl	1
∇	15	1011402	( )	Switch, Key	1
▲	16	1017696	( )	Key Set, Replmt [F/ Keyswitch 1011402]	1
	17	582150	(10000000- 11078288)	Plug, Hole, Rt, 1.23 X 1.12, Nyl	2
	18	1011735	( )	Switch, Safety, Shutoff	1
	19	1064038	( )	Gauge, Hourmeter, 05- 277 Volt, Ac / Dc	1
	20	1205799	( )	Screw, Btn, M5 X 0.8 X 16, 8.8, Nl, Torx	2
	21	1223019	( )	Cover, Console, Lower [T500e]	1
	22	130773	( )	Tie, Cable, Nyl, 11.0l, .14w, 3.0 Max. D	2
	23	1020341	( )	Screw, Hex, M8 X 1.25 X 20, Ss, Sems	4
	24	1226368	( )	Frame, Console, Short, Simplified [Im]	1
	25	1043573	( )	Screw, #10- 14 X 0.675, Spl[Shcs,Selftap]	15
	26	1063909	(MAR2020-)	Seal, Afmkt, Rbr, Clsd, Adh, 01ft	1

∇ ASSEMBLY

▲ INCLUDED IN ASSEMBLY

CONSOLE PANEL, MEMBRANE, WITHOUT TELEMETRY

358032

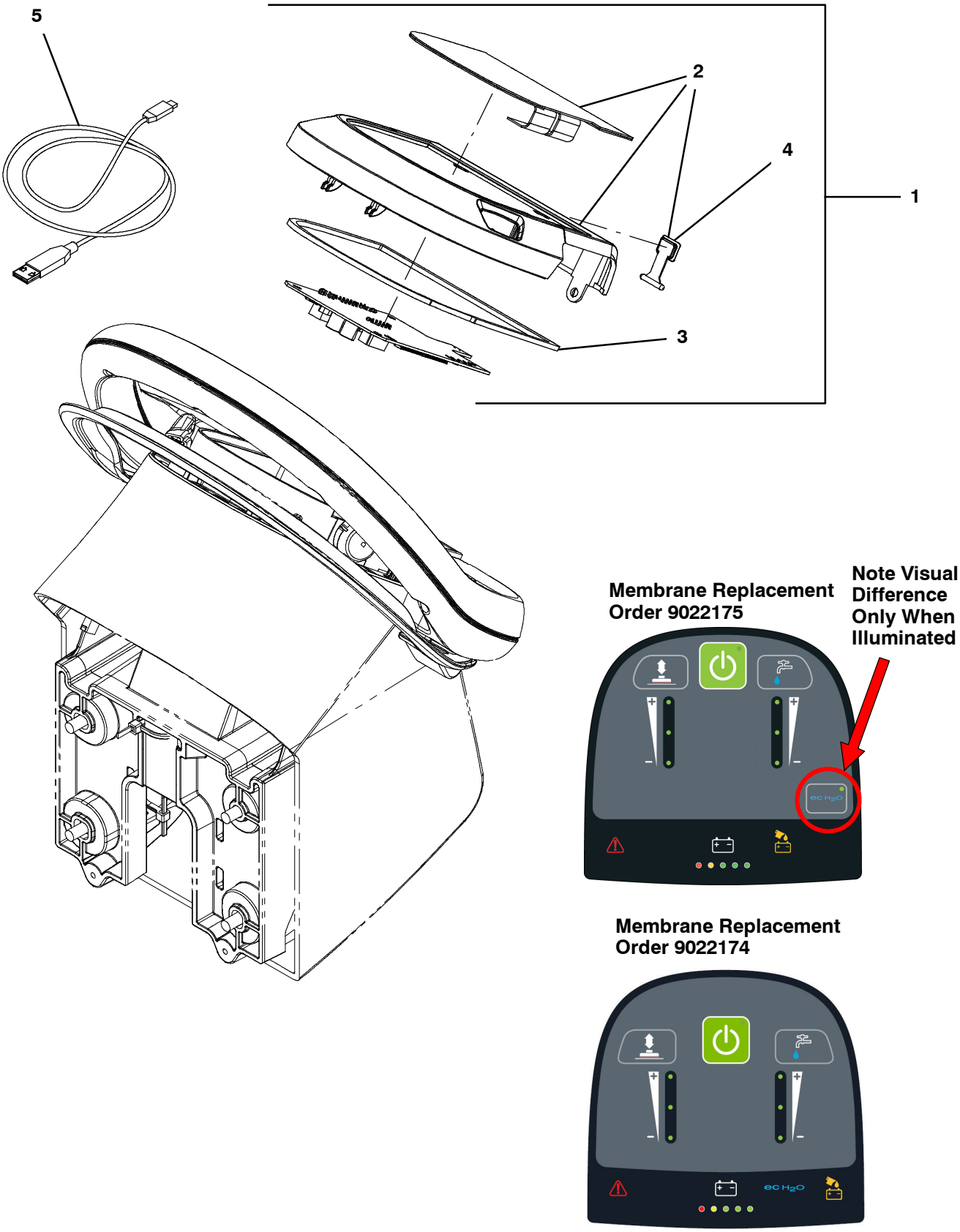

CONSOLE PANEL, MEMBRANE, WITHOUT TELEMETRY

	Ref.	Part No.	Serial Number	Description	Qty.
∇	1	9022174*	(11054675-)	Bezel Kit, Memb, Ci [T500e/Ss500/T600e]	1
▲∇	2	9022175**	(11054675-)	Screen Kit, Memb, Ci [T500e/Ss500/T600e]	1
▲▲	3	1245824	(MAR2020-)	Gasket, Console	1
▲▲	4	1205618	( )	Cap, Usb	1
	5	1071235	( )	Cable [Usb, 2m, A- Male To Mini- B- Male]	1
∇	1	9015780*	(10000000- 11054674)	Bezel Kit, Membrane [T500e, T600e] (Replaced By 9022174*)	1
▲∇	2	9015781	(10000000- 11054674)	Screen Kit, Memebrane, CI [T500e, T600e] (Replaced By 9022174*)	1
▲▲	3	1245824	(MAR2020-)	Gasket, Console	1
▲▲	4	1205618	( )	Cap, Usb	1
	5	1071235	( )	Cable [Usb, 2m, A- Male To Mini- B- Male]	1

*** Requires Tennant *True* service or an authorized Tennant service provider**.

**** Before Ordering Screen Kit Confirm Screen Visually Matches Correct Screen Image**.

∇ ASSEMBLY

▲ INCLUDED IN ASSEMBLY

SQUEEGEE LIFT GROUP

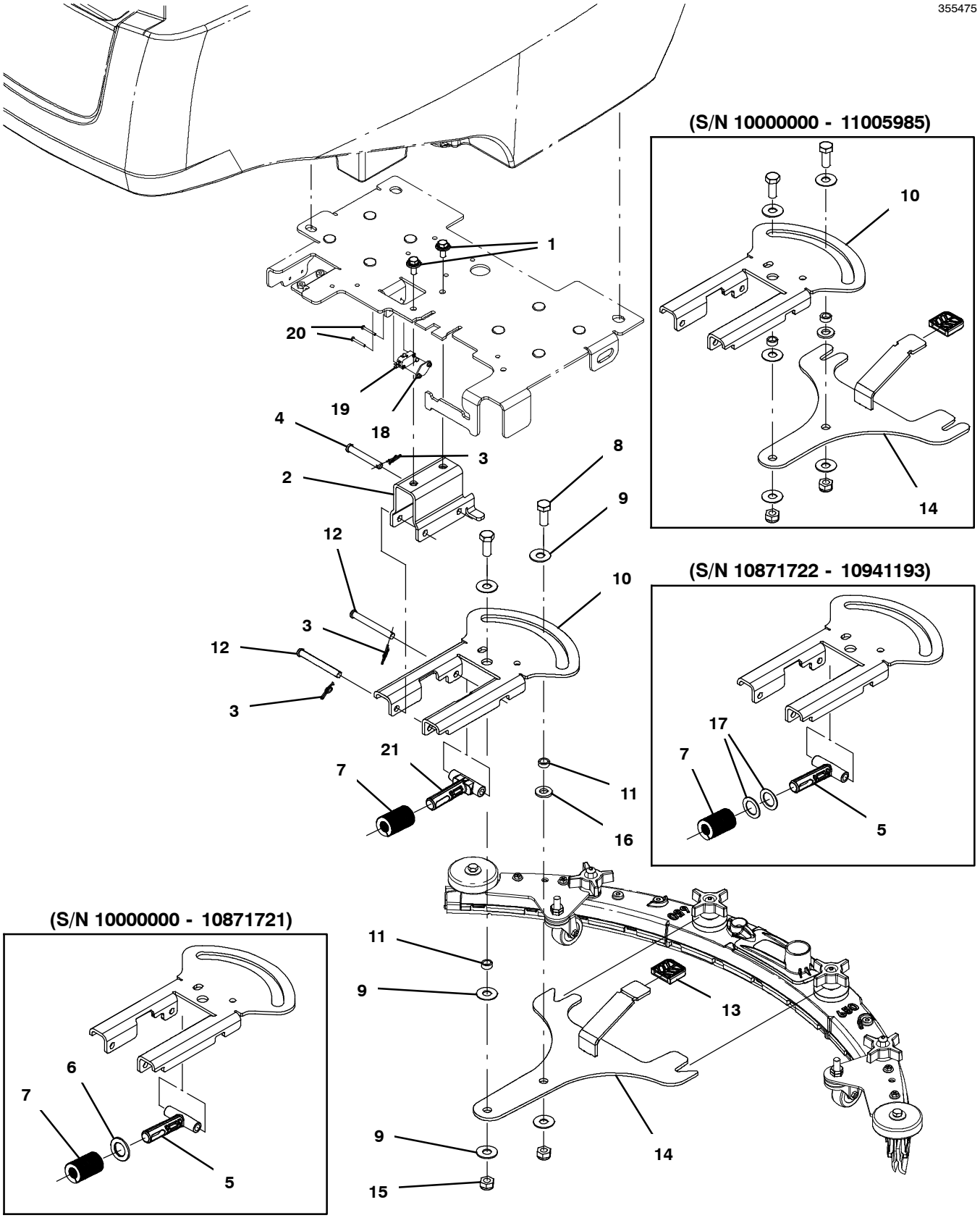

SQUEEGEE LIFT GROUP

Ref.	Part No.	Serial Number	Description	Qty.
1	1020341	( )	Screw, Hex, M8 X 1.25 X 20, Ss, Sems	2
2	4032451	(11064202-)	Bracket, Wldt, Lift, Sqge [T500]	1
2	1221959	(10000000- 11064201)	Bracket, Wldt, Lift, Sqge [T500]	1
3	1216647	( )	Pin, Cotter, Hair, 0.38d .054 Wir	3
4	391179	( )	Pin, Clevis, 0.37d X 2.62l	1
5	1230368	(10000000- 10941193)	Guide, Spring (Replaced by 9016898)	1
6	1225960	(10000000- 10871721)	Washer, Thrust, 0.89b 1.50d 0.13w, Bnz	1
7	1253245	(10997797-)	Spring, Cmpr, 1.4od, .874id, .263d, 2.0l	1
7	1228773	(10000000- 10997796)	Spring, Cmpr, 1.25od, .625id, 2.0l (Replaced By 1253245)	1
8	12309	( )	Screw, Hex, M12 X 1.75 X 30, Ss	2
9	140045	( )	Washer, Flat, 0.51b 1.25d .06, Ss	5
10	1255528	(11005986-)	Bracket, Pivot, Sqge [T500]	1
10	1219466	(10000000- 11005985)	Bracket, Pivot, Sqge [T500]	1
11	1013662	( )	Bushing, Sleeve, 12mmb 16mmd 7mml,Pm Yel	2
12	57598	( )	Pin, Clevis, 0.37d X 3.25l	2
13	1212533	( )	Cover, Pedal, Lift	1
14	1246993	(11005986-)	Bracket Wldt, Mtg, Sqge [T500]	1
14	1220505	(10000000- 11005985)	Bracket Wldt, Mtg, Sqge [T500]	1
15	09741	( )	Nut, Hex, Lock, M12 X 1.75, Nl, Ss	2
16	140127	( )	Washer, Thrust, 0.51b 1.00d 0.12w, Brz	1
17	82226	(10871722- 10941193)	Washer, Flat, 0.91b 1.38d .06, Stl, Pl	2
18	1013705	( )	Plate, Thread, Switch, M3 Nut, 96hr Pl	1
19	1215716	( )	Switch, 0.1a, Spdt[Micro, Gold Contacts]	1
20	33933	( )	Screw, Pan, Phl, M3 X 0.50 X 25, Ss	2
21	1235860	(10941194-)	Guide, Spring	1

SQUEEGEE ASSEMBLY, 500MM / 20IN

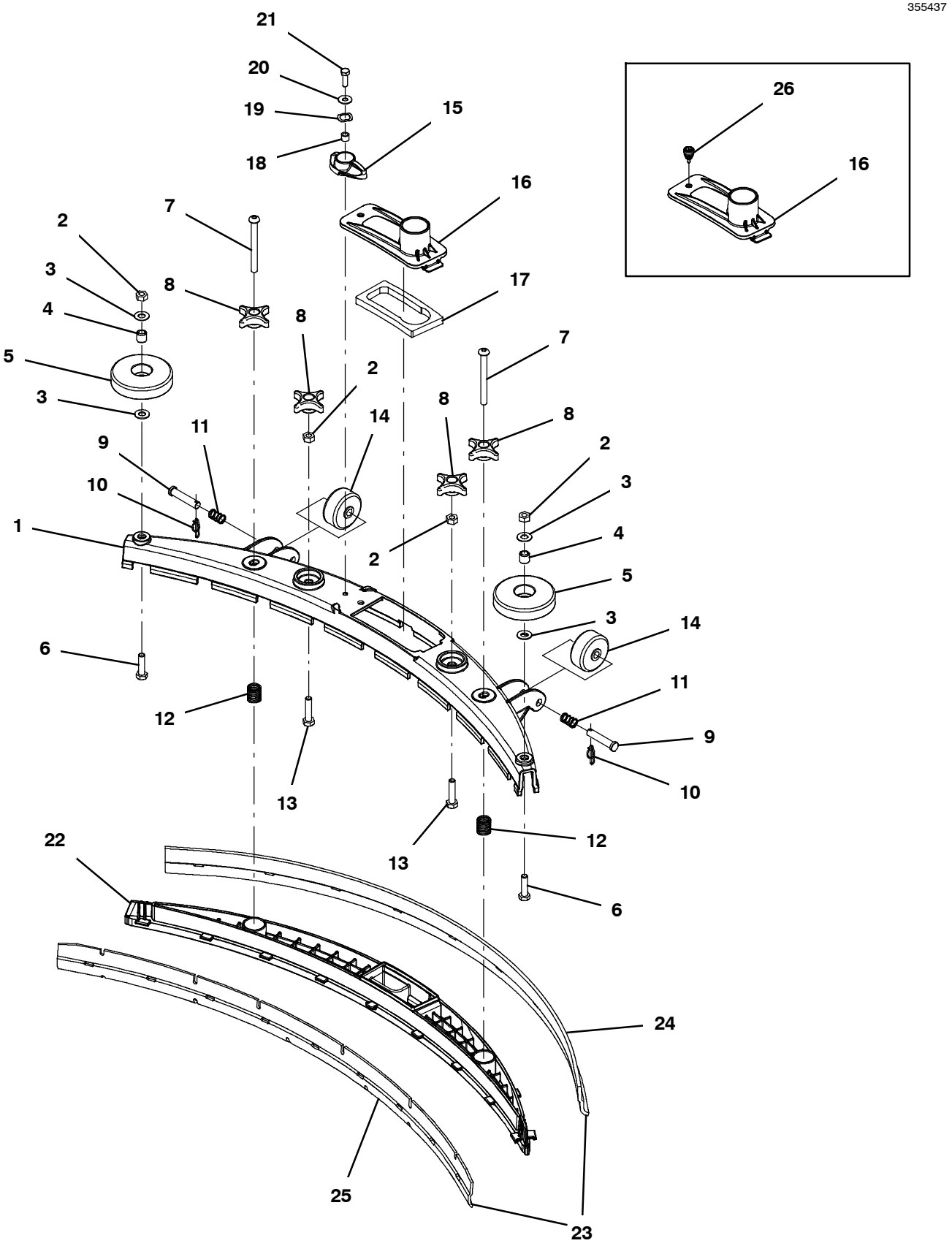

SQUEEGEE ASSEMBLY, 500MM / 20IN

	Ref.	Part No.	Serial Number	Description	Qty.
∇		9014172	( )	Squeegee Kit, Linatex, Ci [T300/E/Ss300]	1
▲	1	1230946	( )	Frame, Sqge, 50cm, Mach [T300]	1
▲	2	07786	( )	Nut, Hex, Std, M8 X 1.25, Ss	2
▲	3	140027	( )	Washer, Flat, 0.35b 0.75d .04, Ss	4
▲	4	222460	( )	Sleeve, P/M, 0.32b 0.50d 0.5l [430ss]	2
▲	5	1010560	( )	Wheel, Bmpr, 80d X 25w, Non- Marking	2
▲	6	1016399	( )	Screw, Hex, M8 X 1.25 X 30, Nl, Ss	2
▲	7	1212755	( )	Screw, Btn, M8 X 1.25 X 80, Ss	2
▲	8	1213677	( )	Knob, Star, 2.00od 4ear M8x1.25 [Yel]	4
▲	9	17461	( )	Pin, Clevis, 0.37d X 1.75l	2
▲	10	1216647	( )	Pin, Cotter, Hair, 0.38d .054 Wir	2
▲	11	1017091	( )	Spring, Cmpr, 0.50od .04wir 00.8l	2
▲	12	22290	( )	Spring, Cmpr, 0.72od .06wir 02.3l	2
▲	13	09026	( )	Screw, Hex, M8 X 1.25 X 40, Ss	2
▲	14	630477	( )	Wheel, Pyu, 02.0d 0.38w, Gray	2
▲	15	1222109	(xxxxxxxx-)	Knob, Sqge, 58l, M6 X 1.00, Plstc	1
▲	16	1209631	( )	Cover, Trap, Water, Sqge	1
▲	17	1210756	( )	Gasket, Trap, Water, Sqge	1
▲	18	140154	(xxxxxxxx-)	Sleeve, P/M, 0.25b 0.38d 0.3l, Pl	1
▲	19	140060	(xxxxxxxx-)	Washer, .505 X .750 X 0.45 Wave	1
▲	20	01684	(xxxxxxxx-)	Washer, Flat, 0.27b 0.69d .05, Ss	1
▲	21	12277	(xxxxxxxx-)	Screw, Hex, M6 X 1.00 X 20, Nl, Ss	1
▲	22	1203638	( )	Retainer, Sqge [T300]	1
▲∇	23	9015731	( )	Blade Kit, 500mm, Linatex (Standard)	1
▲▲	24	1203953	( )	Blade, Sqge, Rear, 836l, Linatex[500mm] (Standard)	1
▲▲	25	1203954	( )	Blade, Sqge, Front, 788l, Linatex[500mm] (Standard)	1
∇	23	9015732	( )	Blade Kit, 500mm, Urethane (Option)	1
▲	24	1215609	( )	Blade, Sqge, Rear, 836l, Urethane[500mm] (Option)	1
▲	25	1215611	( )	Blade, Sqge, Front, 788l, Urethane[500mm (Option)	1
∇	23	9015730	( )	Blade Kit, 500mm, Gum (Option)	1
▲	24	1215610	( )	Blade, Sqge, Rear, 836l, Gum[500mm] (Option)	1
▲	25	1215612	( )	Blade, Sqge, Front, 788l, Gum[500mm] (Option)	1
	26	1212683	(10000000- xxxxxxxx)	Screw, Captive, M5, Knurled [Snap In]	1

∇ ASSEMBLY

▲ INCLUDED IN ASSEMBLY

SQUEEGEE ASSEMBLY, 650MM / 26IN
(New Style 9021741)

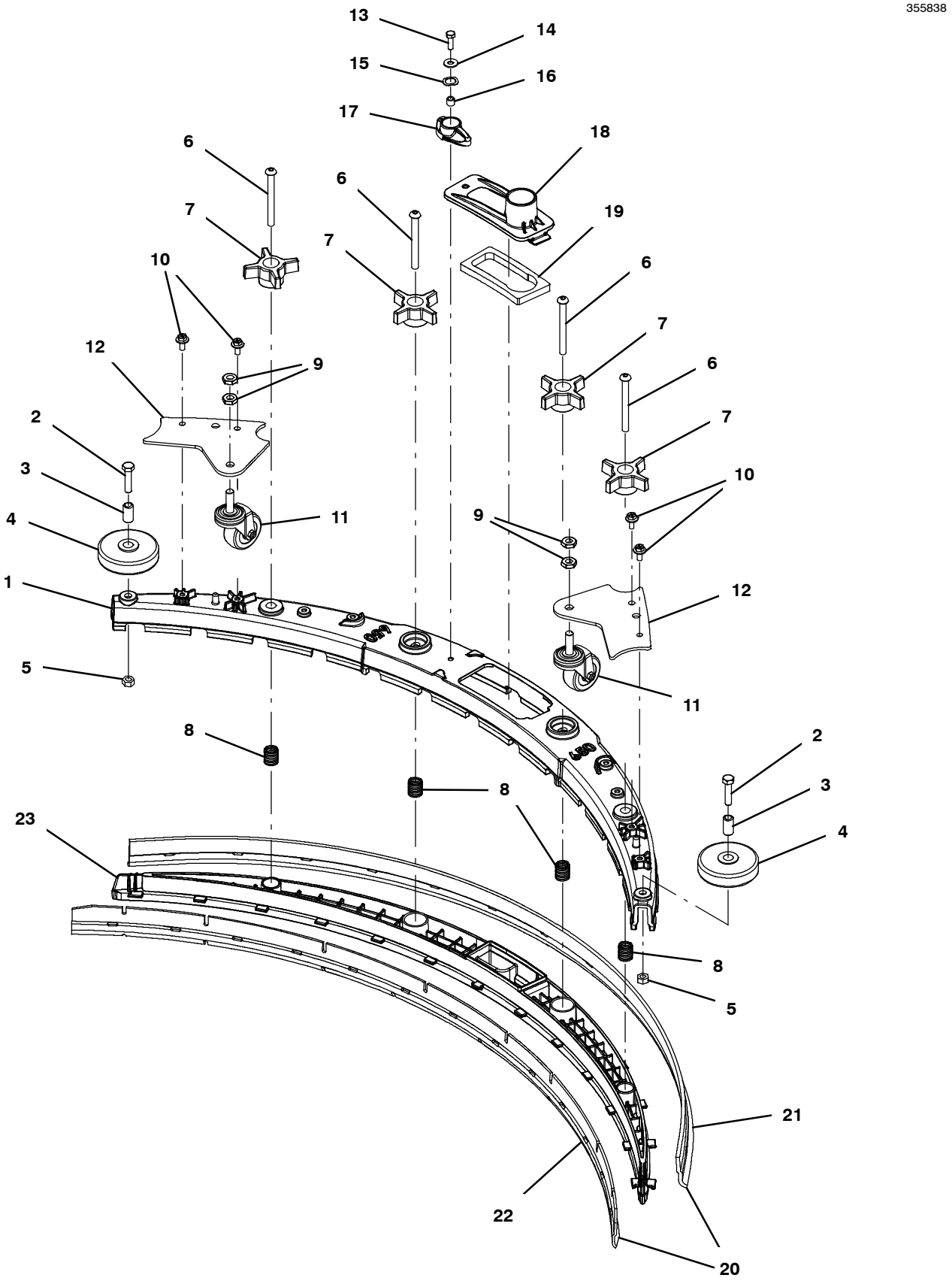

SQUEEGEE ASSEMBLY, 650MM / 26IN
(New Style 9021741)

	Ref.	Part No.	Serial Number	Description	Qty.
∇		9021741	(11005986-)	Squeegee Kit, 650mm	1
▲	1	1243537	(11005986-)	Frame, Sqge, 65cm, Mach [T500/T600]	1
▲	2	59658	( )	Screw, Hex, M8 X 1.25 X 35, Nl, Ss	2
▲	3	222496	( )	Sleeve, P/M, 0.32b 0.50d 0.9l [430ss]	2
▲	4	222066	( )	Wheel, 03.0d 0.88w 0.50b	2
▲	5	07786	( )	Nut, Hex, Std, M8 X 1.25, Ss	2
▲	6	1255358	( )	Screw, Btn, M8 X 1.25 X 85, Ss	4
▲	7	1074204	( )	Knob,Star,2.75d 4ear 1.1l M8x1.25,Thru,Y	4
▲	8	22290	( )	Spring, Cmpr, 0.72od .06wir 02.3l	4
▲	9	32716	(11005986-)	Nut, Hex, Jam, M10 X 1.5, Ss	4
▲	10	1034731	(10964903-)	Screw, Hex, M6 X 1.00 X 16, Sems, Ss	4
▲	11	4029759	( )	Caster, Swivel,	2
▲	12	1243364	(11005986-)	Plate, Caster, Sqge	2
▲	13	12277	( )	Screw, Hex, M6 X 1.00 X 20, Nl, Ss	1
▲	14	01684	( )	Washer, Flat, 0.27b 0.69d .05, Ss	1
▲	15	140060	( )	Washer, Wave- Spring, .505 .750 .045	1
▲	16	140154	( )	Sleeve, P/M, 0.25b 0.38d 0.3l, Pl	1
▲	17	1222109	( )	Knob, Sqge, 58l, M6 X 1.00, Plstc	1
▲	18	1209631	( )	Cover, Trap, Water, Sqge	1
▲	19	1210756	( )	Gasket, Trap, Water, Sqge	1
▲∇	20	9015734	( )	Blade Kit, 650mm, Linatex/Linard (Standard)	1
▲▲	21	1221585	( )	Blade, Sqge, Rear, 1166l, Linatex[650mm] (Standard)	1
▲▲	22	1232680	( )	Blade, Sqge, Front, 1072l Linard[650mm] (Standard)	1
▲	23	1221260	( )	Retainer, Sqge, 65cm [T500]	1
∇	20	9015735	( )	Blade Kit, 650mm, Urethane (Option)	1
▲	21	1228909	( )	Blade, Sqge, Rear, 1136l,Urethane[650mm] (Option)	1
▲	22	1228915	( )	Blade, Sqge, Front,1072l,Urethane[650mm] (Option)	1
∇	20	9015733	( )	Blade Kit, 650mm, Gum (Option)	1
▲	21	1228910	( )	Blade, Sqge, Rear, 1136l, Gum[650mm] (Option)	1
▲	22	1228919	( )	Blade, Sqge, Front, 1072l Gum[650mm] (Option)	1

∇ ASSEMBLY

▲ INCLUDED IN ASSEMBLY

SQUEEGEE ASSEMBLY, 650MM / 26IN
(Original Style 9015301 - Replaced By 9021741)

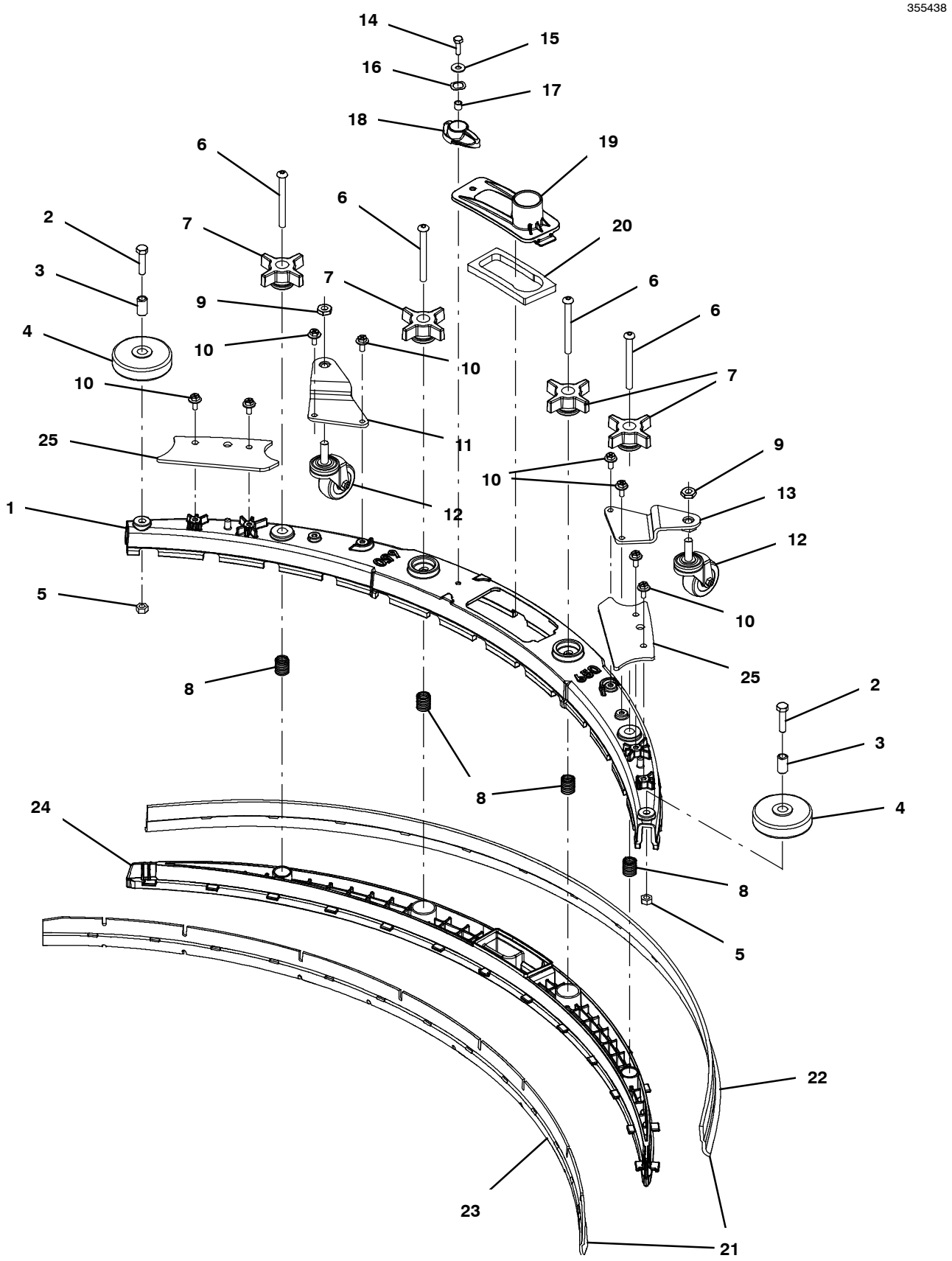

SQUEEGEE ASSEMBLY, 650MM / 26IN
(Original Style 9015301 - Replaced By 9021741)

	Ref.	Part No.	Serial Number	Description	Qty.
∇		9015301	(10000000- 11005985)	Squeegee Kit, 650mm, Ci (Replaced By 9021741)	1
▲	1	1243537	(10979889- 11005985)	Frame, Sqge, 65cm, Mach [T500/T600]	1
▲	1	1221259	(10000000- 10979888)	Frame, Sqge, 65cm, Mach [T500] (Replaced By 1243537)	1
▲	2	59658	( )	Screw, Hex, M8 X 1.25 X 35, Nl, Ss	2
▲	3	222496	( )	Sleeve, P/M, 0.32b 0.50d 0.9l [430ss]	2
▲	4	222066	( )	Wheel, 03.0d 0.88w 0.50b	2
▲	5	07786	( )	Nut, Hex, Std, M8 X 1.25, Ss	2
▲	6	1255358	( )	Screw, Btn, M8 X 1.25 X 80, Ss	4
▲	7	1074204	( )	Knob,Star,2.75d 4ear 1.1l M8x1.25,Thru,Y	4
▲	8	22290	( )	Spring, Cmpr, 0.72od .06wir 02.3l	4
▲	9	32716	(10000000- 11005985)	Nut, Hex, Jam, M10 X 1.5, Ss	2
▲	10	1034731	(10000000- 11005985)	Screw, Hex, M6 X 1.00 X 16, Sems, Ss	8
▲	11	1222236	(10000000- 11005985)	Bracket Wldt, Caster, Rh Sqge[T500]	1
▲	12	4029759	( )	Caster, Swivel,	2
▲	13	1222001	(10000000- 11005985)	Bracket Wldt, Caster, Lh Sqge [T500]	1
▲	14	12277	( )	Screw, Hex, M6 X 1.00 X 20, Nl, Ss	1
▲	15	01684	( )	Washer, Flat, 0.27b 0.69d .05, Ss	1
▲	16	140060	( )	Washer, Wave- Spring, .505 .750 .045	1
▲	17	140154	( )	Sleeve, P/M, 0.25b 0.38d 0.3l, Pl	1
▲	18	1222109	( )	Knob, Sqge, 58l, M6 X 1.00, Plstc	1
▲	19	1209631	( )	Cover, Trap, Water, Sqge	1
▲	20	1210756	( )	Gasket, Trap, Water, Sqge	1
▲∇	21	9015734	( )	Blade Kit, 650mm, Linatex/Linard (Standard)	1
▲▲	22	1221585	( )	Blade, Sqge, Rear, 1166l, Linatex[650mm] (Standard)	1
▲▲	23	1232680	( )	Blade, Sqge, Front, 1072l Linard[650mm] (Standard)	1
▲	24	1221260	( )	Retainer, Sqge, 65cm [T500]	1
▲	25	1230738	(10000000- 11005985)	Bracket, Sqge Bumper	2
∇	21	9015735	( )	Blade Kit, 650mm, Urethane (Option)	1
▲	22	1228909	( )	Blade, Sqge, Rear, 1136l,Urethane[650mm] (Option)	1
▲	23	1228915	( )	Blade, Sqge, Front,1072l,Urethane[650mm] (Option)	1
∇	21	9015733	( )	Blade Kit, 650mm, Gum (Option)	1
▲	22	1228910	( )	Blade, Sqge, Rear, 1136l, Gum[650mm] (Option)	1
▲	23	1228919	( )	Blade, Sqge, Front, 1072l Gum[650mm] (Option)	1

∇ ASSEMBLY

▲ INCLUDED IN ASSEMBLY

SQUEEGEE ASSEMBLY, 700MM / 28IN
(New Style 9021742)

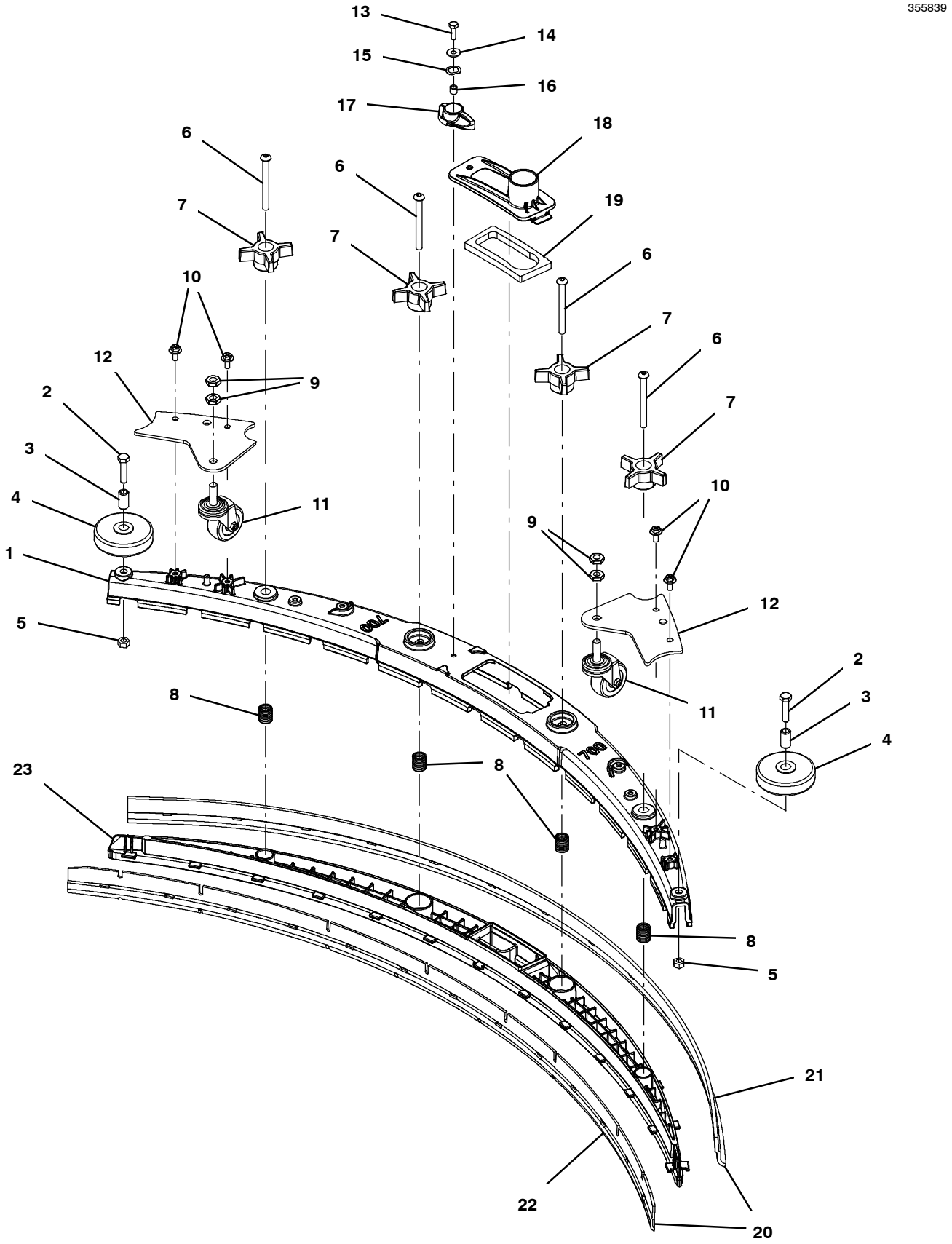

SQUEEGEE ASSEMBLY, 700MM / 28IN
(New Style 9021742)

	Ref.	Part No.	Serial Number	Description	Qty.
∇		9021742	(11005986-)	Squeegee Kit, 700mm	1
▲	1	1241632	(11005986-)	Frame, Sqge, 70cm, Mach [T500/T600]	1
▲	2	59658	( )	Screw, Hex, M8 X 1.25 X 35, Nl, Ss	2
▲	3	222496	( )	Sleeve, P/M, 0.32b 0.50d 0.9l [430ss]	2
▲	4	222066	( )	Wheel, 03.0d 0.88w 0.50b	2
▲	5	07786	( )	Nut, Hex, Std, M8 X 1.25, Ss	2
▲	6	1255358	( )	Screw, Btn, M8 X 1.25 X 85, Ss	4
▲	7	1074204	( )	Knob,Star,2.75d 4ear 1.1l M8x1.25,Thru,Y	4
▲	8	22290	( )	Spring, Cmpr, 0.72od .06wir 02.3l	4
▲	9	32716	(11005986-)	Nut, Hex, Jam, M10 X 1.5, Ss	4
▲	10	1034731	(11005986-)	Screw, Hex, M6 X 1.00 X 16, Sems, Ss	4
▲	11	4029759	( )	Caster, Swivel,	2
▲	12	1243364	(11005986-)	Plate, Caster, Sqge	2
▲	13	12277	( )	Screw, Hex, M6 X 1.00 X 20, Nl, Ss	1
▲	14	01684	( )	Washer, Flat, 0.27b 0.69d .05, Ss	1
▲	15	140060	( )	Washer, Wave- Spring, .505 .750 .045	1
▲	16	140154	( )	Sleeve, P/M, 0.25b 0.38d 0.3l, Pl	1
▲	17	1222109	( )	Knob, Sqge, 58l, M6 X 1.00, Plstc	1
▲	18	1209631	( )	Cover, Trap, Water, Sqge	1
▲	19	1210756	( )	Gasket, Trap, Water, Sqge	1
▲∇	20	9015737	( )	Blade Kit, 700mm, Linatex/Linard (Standard)	1
▲▲	21	1221572	( )	Blade, Sqge, Rear, 1204l, Linatex[700mm] (Standard)	1
▲▲	22	1232679	( )	Blade, Sqge, Front, 1148l Linard[700mm] (Standard)	1
▲	23	1220783	( )	Retainer, Sqge, 70cm [T500]	1
∇	20	9015738	( )	Blade Kit, 700mm, Urethane (Option)	1
▲	21	1228904	( )	Blade, Sqge, Rear, 1204l,Urethane[700mm] (Option)	1
▲	22	1228906	( )	Blade, Sqge, Front,1148l Urethane[700mm] (Option)	1
∇	20	9015736	( )	Blade Kit, 700mm, Gum (Option)	1
▲	21	1228905	( )	Blade, Sqge, Rear, 1204l, Gum[700mm] (Option)	1
▲	22	1228907	( )	Blade, Sqge, Front, 1148l Gum[700mm] (Option)	1

∇ ASSEMBLY

▲ INCLUDED IN ASSEMBLY

SQUEEGEE ASSEMBLY, 700MM / 28IN
(Original Style 9015302 - Replaced By 9021742)

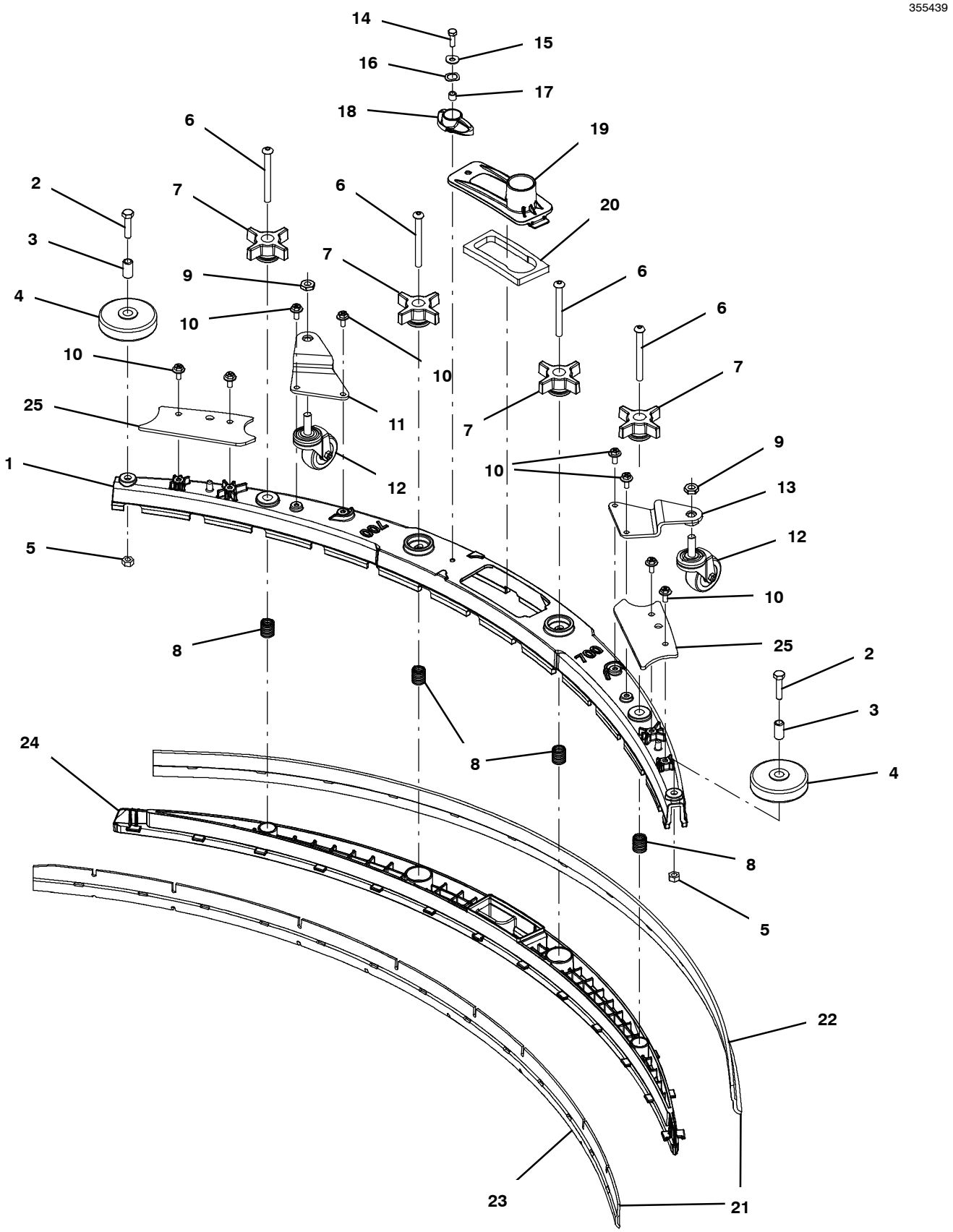

SQUEEGEE ASSEMBLY, 700MM / 28IN
(Original Style 9015302 - Replaced By 9021742)

	Ref.	Part No.	Serial Number	Description	Qty.
∇		9015302	(10000000- 11005985)	Squeegee Kit, 700mm, Ci (Replaced By 9021742)	1
▲	1	1241632	(10983981- 11005985)	Frame, Sqge, 70cm, Mach [T500/T600]	1
▲	1	1220309	(10000000- 10983980)	Frame, Sqge, 70cm, Mach [T500] (Replaced By 1241632)	1
▲	2	59658	( )	Screw, Hex, M8 X 1.25 X 35, Nl, Ss	2
▲	3	222496	( )	Sleeve, P/M, 0.32b 0.50d 0.9l [430ss]	2
▲	4	222066	( )	Wheel, 03.0d 0.88w 0.50b	2
▲	5	07786	( )	Nut, Hex, Std, M8 X 1.25, Ss	2
▲	6	1255358	( )	Screw, Btn, M8 X 1.25 X 80, Ss	4
▲	7	1074204	( )	Knob,Star,2.75d 4ear 1.1l M8x1.25,Thru,Y	4
▲	8	22290	( )	Spring, Cmpr, 0.72od .06wir 02.3l	4
▲	9	32716	(10000000- 11005985)	Nut, Hex, Jam, M10 X 1.5, Ss	2
▲	10	1034731	(10000000- 11005985)	Screw, Hex, M6 X 1.00 X 16, Sems, Ss	8
▲	11	1222236	(10000000- 11005985)	Bracket Wldt, Caster, Rh Sqge[T500]	1
▲	12	4029759	( )	Caster, Swivel,	2
▲	13	1222001	(10000000- 11005985)	Bracket Wldt, Caster, Lh Sqge [T500]	1
▲	14	12277	( )	Screw, Hex, M6 X 1.00 X 20, Nl, Ss	1
▲	15	01684	( )	Washer, Flat, 0.27b 0.69d .05, Ss	1
▲	16	140060	( )	Washer, Wave- Spring, .505 .750 .045	1
▲	17	140154	( )	Sleeve, P/M, 0.25b 0.38d 0.3l, Pl	1
▲	18	1222109	( )	Knob, Sqge, 58l, M6 X 1.00, Plstc	1
▲	19	1209631	( )	Cover, Trap, Water, Sqge	1
▲	20	1210756	( )	Gasket, Trap, Water, Sqge	1
▲∇	21	9015737	( )	Blade Kit, 700mm, Linatex/Linard (Standard)	1
▲▲	22	1221572	( )	Blade, Sqge, Rear, 1204l, Linatex[700mm] (Standard)	1
▲▲	23	1232679	( )	Blade, Sqge, Front, 1148l Linard[700mm] (Standard)	1
▲	24	1220783	( )	Retainer, Sqge, 70cm [T500]	1
▲	25	1230738	(10000000- 11005985)	Bracket, Sqge Bumper	2
∇	21	9015738	( )	Blade Kit, 700mm, Urethane (Option)	1
▲	22	1228904	( )	Blade, Sqge, Rear, 1204l,Urethane[700mm] (Option)	1
▲	23	1228906	( )	Blade, Sqge, Front,1148l Urethane[700mm] (Option)	1
∇	21	9015736	( )	Blade Kit, 700mm, Gum (Option)	1
▲	22	1228905	( )	Blade, Sqge, Rear, 1204l, Gum[700mm] (Option)	1
▲	23	1228907	( )	Blade, Sqge, Front, 1148l Gum[700mm] (Option)	1

∇ ASSEMBLY
▲ INCLUDED IN ASSEMBLY

SQUEEGEE ASSEMBLY, 800MM / 32IN
(New Style 9021743)

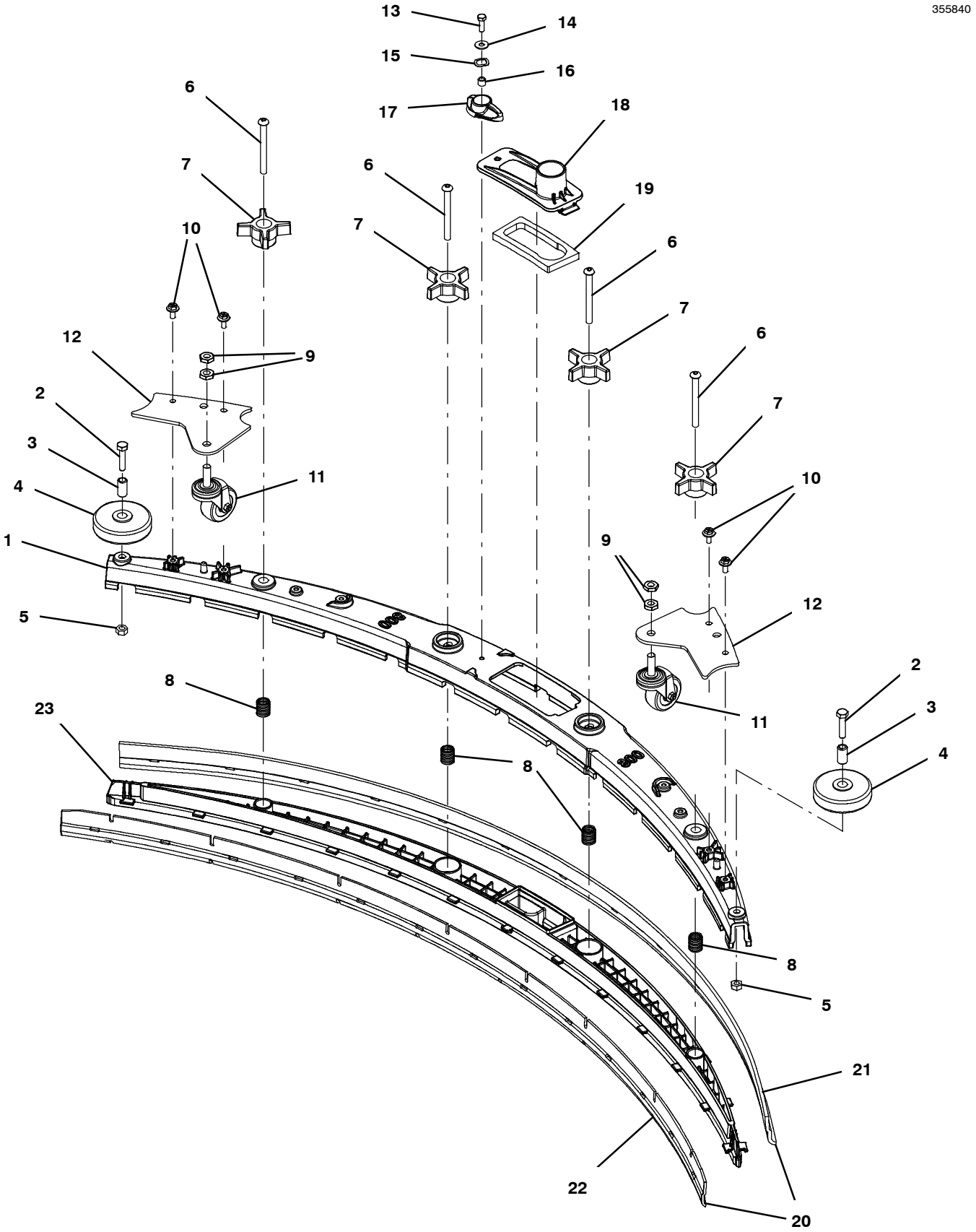

SQUEEGEE ASSEMBLY, 800MM / 32IN
(New Style 9021743)

	Ref.	Part No.	Serial Number	Description	Qty.
∇		9021743	(11005986-)	Squeegee Kit, 800mm	1
▲	1	1243538	(11005986-)	Frame, Sqge, 80cm, Mach [T500/T600]	1
▲	2	59658	( )	Screw, Hex, M8 X 1.25 X 35, Nl, Ss	2
▲	3	222496	( )	Sleeve, P/M, 0.32b 0.50d 0.9l [430ss]	2
▲	4	222066	( )	Wheel, 03.0d 0.88w 0.50b	2
▲	5	07786	( )	Nut, Hex, Std, M8 X 1.25, Ss	2
▲	6	1255358	( )	Screw, Btn, M8 X 1.25 X 85, Ss	4
▲	7	1074204	( )	Knob,Star,2.75d 4ear 1.1l M8x1.25,Thru,Y	4
▲	8	22290	( )	Spring, Cmpr, 0.72od .06wir 02.3l	4
▲	9	32716	(11005986-)	Nut, Hex, Jam, M10 X 1.5, Ss	4
▲	10	1034731	(11005986-)	Screw, Hex, M6 X 1.00 X 16, Sems, Ss	4
▲	11	4029759	( )	Caster, Swivel,	2
▲	12	1243364	(11005986-)	Plate, Caster, Sqge	2
▲	13	12277	( )	Screw, Hex, M6 X 1.00 X 20, Nl, Ss	1
▲	14	01684	( )	Washer, Flat, 0.27b 0.69d .05, Ss	1
▲	15	140060	( )	Washer, Wave- Spring, .505 .750 .045	1
▲	16	140154	( )	Sleeve, P/M, 0.25b 0.38d 0.3l, Pl	1
▲	17	1222109	( )	Knob, Sqge, 58l, M6 X 1.00, Plstc	1
▲	18	1209631	( )	Cover, Trap, Water, Sqge	1
▲	19	1210756	( )	Gasket, Trap, Water, Sqge	1
▲∇	20	9015740	( )	Blade Kit, 800mm, Linatex/Linard (Standard)	1
▲▲	21	1221115	( )	Blade, Sqge, Rear, 1306l, Linatex[800mm] (Standard)	1
▲▲	22	1232681	( )	Blade, Sqge, Front, 1256l Linard[800mm] (Standard)	1
▲	23	1219405	( )	Retainer, Sqge, 80cm [T500]	1
∇	20	9015741	( )	Blade Kit, 800mm, Urethane (Option)	1
▲	21	1228920	( )	Blade, Sqge, Rear, 1306l,Urethane[800mm] (Option)	1
▲	22	1228922	( )	Blade, Sqge, Front,1256l Urethane[800mm] (Option)	1
∇	20	9015739	( )	Blade Kit, 800mm, Gum (Option)	1
▲	21	1228921	( )	Blade, Sqge, Rear, 1306l, Gum[800mm] (Option)	1
▲	22	1228923	( )	Blade, Sqge, Front, 1256l Gum[800mm] (Option)	1

∇ ASSEMBLY

▲ INCLUDED IN ASSEMBLY

SQUEEGEE ASSEMBLY, 800MM / 32IN
(Original Style 9015303 - Replaced By 9021743)

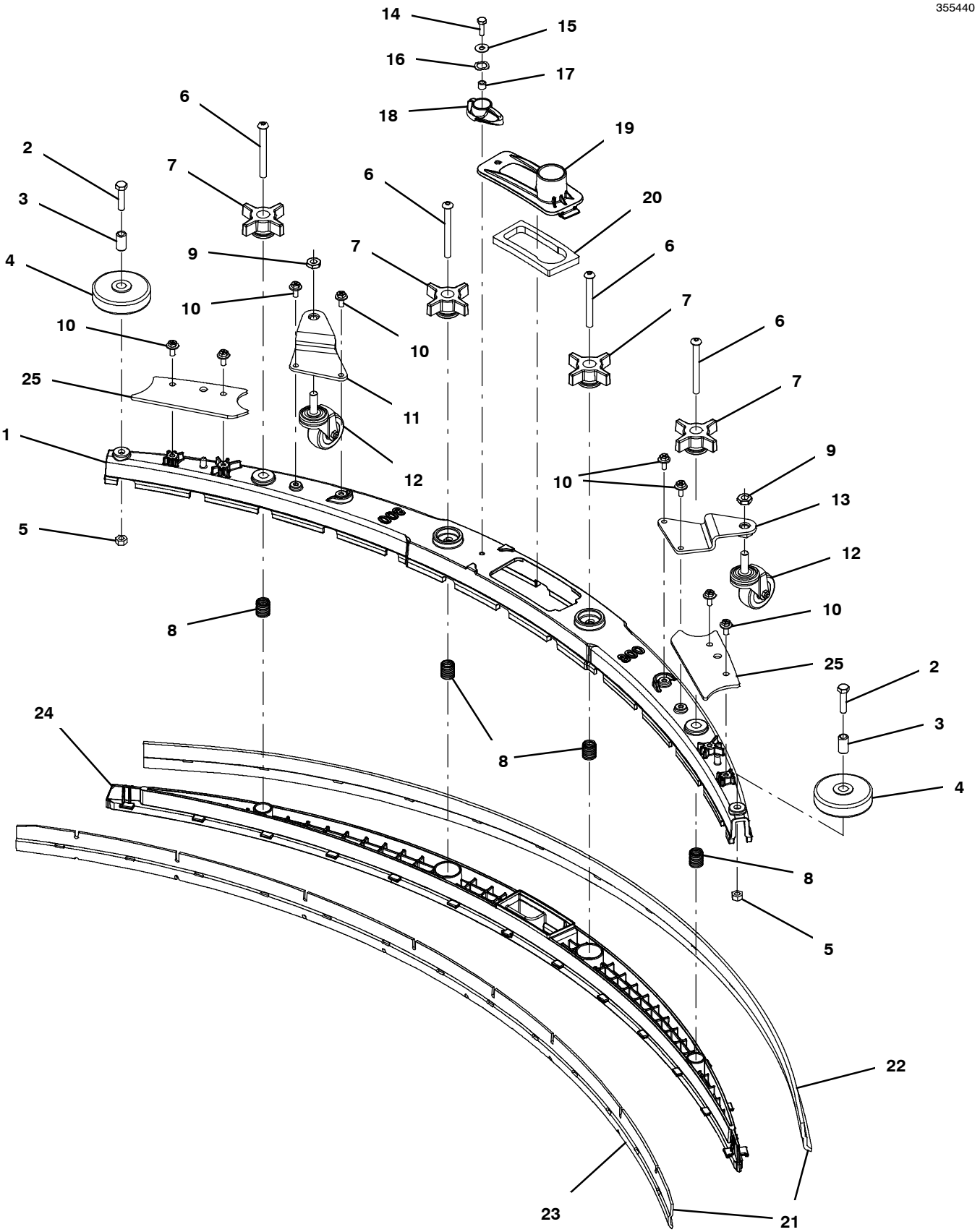

SQUEEGEE ASSEMBLY, 800MM / 32IN
(Original Style 9015303 - Replaced By 9021743)

	Ref.	Part No.	Serial Number	Description	Qty.
∇		9015303	(10000000- 11005985)	Squeegee Kit, 800mm, Ci (Replaced By 9021743)	1
▲	1	1243538	(10996996- 11005985)	Frame, Sqge, 80cm, Mach [T500/T600]	1
▲	1	1219894	(10000000- 10996995)	Frame, Sqge, 80cm, Mach [T500] (Replaced By 1243538)	1
▲	2	59658	( )	Screw, Hex, M8 X 1.25 X 35, Nl, Ss	2
▲	3	222496	( )	Sleeve, P/M, 0.32b 0.50d 0.9l [430ss]	2
▲	4	222066	( )	Wheel, 03.0d 0.88w 0.50b	2
▲	5	07786	( )	Nut, Hex, Std, M8 X 1.25, Ss	2
▲	6	1255358	( )	Screw, Btn, M8 X 1.25 X 80, Ss	4
▲	7	1074204	( )	Knob,Star,2.75d 4ear 1.1l M8x1.25,Thru,Y	4
▲	8	22290	( )	Spring, Cmpr, 0.72od .06wir 02.3l	4
▲	9	32716	(10000000- 11005985)	Nut, Hex, Jam, M10 X 1.5, Ss	2
▲	10	1034731	(10000000- 11005985)	Screw, Hex, M6 X 1.00 X 16, Sems, Ss	8
▲	11	1222236	(10000000- 11005985)	Bracket Wldt, Caster, Rh Sqge[T500]	1
▲	12	4029759	( )	Caster, Swivel,	2
▲	13	1222001	(10000000- 11005985)	Bracket Wldt, Caster, Lh Sqge [T500]	1
▲	14	12277	( )	Screw, Hex, M6 X 1.00 X 20, Nl, Ss	1
▲	15	01684	( )	Washer, Flat, 0.27b 0.69d .05, Ss	1
▲	16	140060	( )	Washer, Wave- Spring, .505 .750 .045	1
▲	17	140154	( )	Sleeve, P/M, 0.25b 0.38d 0.3l, Pl	1
▲	18	1222109	( )	Knob, Sqge, 58l, M6 X 1.00, Plstc	1
▲	19	1209631	( )	Cover, Trap, Water, Sqge	1
▲	20	1210756	( )	Gasket, Trap, Water, Sqge	1
▲∇	21	9015740	( )	Blade Kit, 800mm, Linatex/Linard (Standard)	1
▲▲	22	1221115	( )	Blade, Sqge, Rear, 1306l, Linatex[800mm] (Standard)	1
▲▲	23	1232681	( )	Blade, Sqge, Front, 1256l Linard[800mm] (Standard)	1
▲	24	1219405	( )	Retainer, Sqge, 80cm [T500]	1
▲	25	1230738	(10000000- 11005985)	Bracket, Sqge Bumper	2
∇	21	9015741	( )	Blade Kit, 800mm, Urethane (Option)	1
▲	22	1228920	( )	Blade, Sqge, Rear, 1306l,Urethane[800mm] (Option)	1
▲	23	1228922	( )	Blade, Sqge, Front,1256l Urethane[800mm] (Option)	1
∇	21	9015739	( )	Blade Kit, 800mm, Gum (Option)	1
▲	22	1228921	( )	Blade, Sqge, Rear, 1306l, Gum[800mm] (Option)	1
▲	23	1228923	( )	Blade, Sqge, Front, 1256l Gum[800mm] (Option)	1

∇ ASSEMBLY
▲ INCLUDED IN ASSEMBLY

STANDARD SOLUTION GROUP (NEW BARB CONNECTOR STYLE)
(S/N 11089942 -)

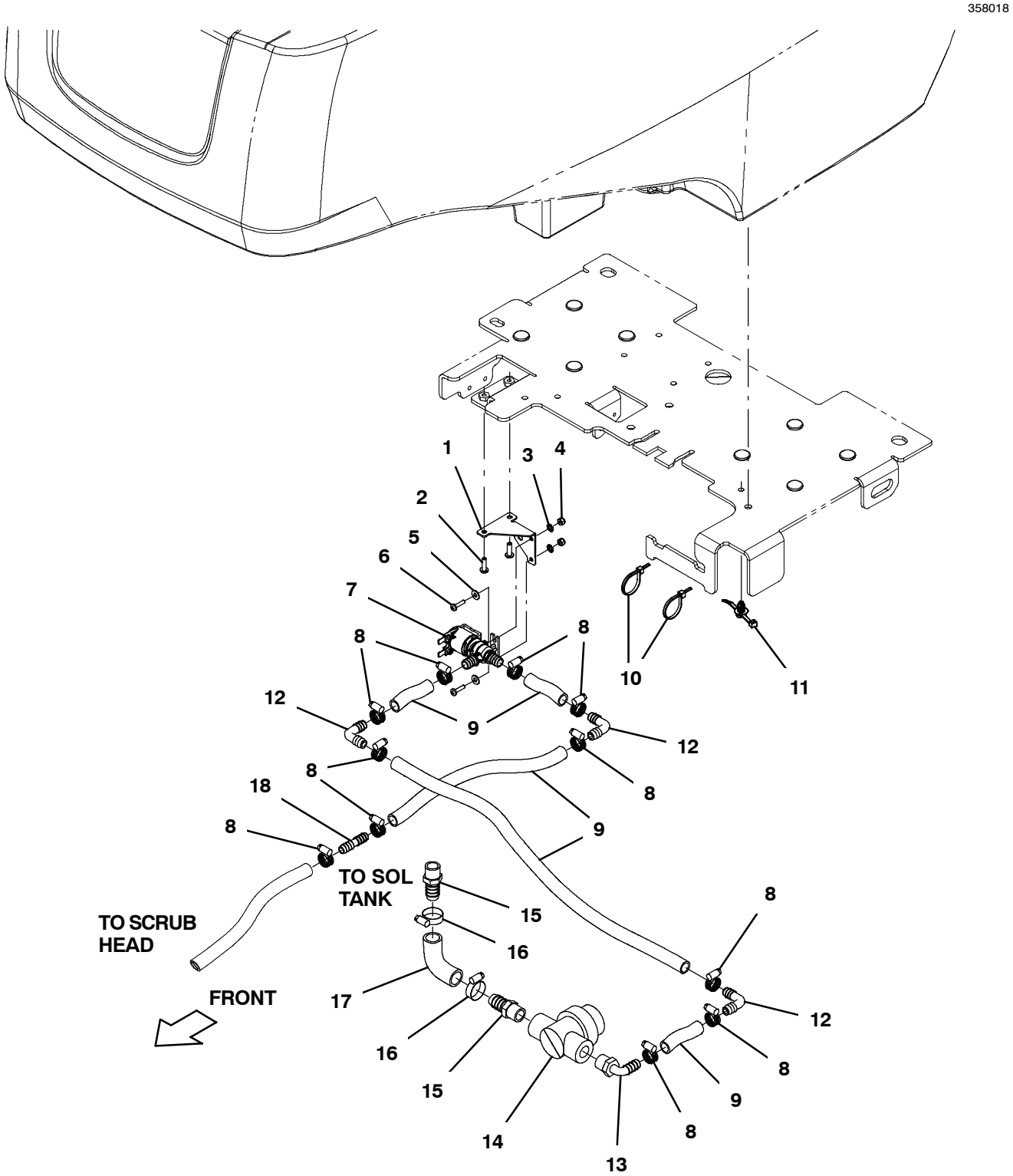

STANDARD SOLUTION GROUP (NEW BARB CONNECTOR STYLE)
(S/N 11089942 -)

	Ref.	Part No.	Serial Number	Description	Qty.
	1	1247965	(11089942-)	Bracket, Valve	1
	2	1205799	( )	Screw, Btn, M5 X 0.8 X 16, 8.8, Nl, Torx	2
	3	140061	(11089942-)	Washer, Lock, Ext, 08, Pl	2
	4	33932	(11089942-)	Nut, Hex, Lock, M4 X 0.70, Nl, Ss	2
	5	41579	(11089942-)	Washer, Flat, 08, Ss	2
	6	24265	(11089942-)	Screw, Pan, Phl, M4 X 0.70 X 16, Ss	1
	7	1248867	(11089942-)	Valve, Water, Solenoid, 24vdc Bm06/Bm06	1
	8	43844	(11089942-)	Clamp, Hose, Wormdrive, 0.25- 0.62d, .31w	11
	9	1006416	(11089942-)	Hose, Afmkt, Pvc, Clr, 0.38id, 03ft	1
	10	130773	( )	Tie, Cable, Nyl, 11.0l, .14w, 3.0 Max. D	2
	11	1210807	(10865727-)	Wire, Tie [W/.25” Fir Tree Clip]	1
	12	20951	(11089942-)	Fitting, Plstc, E90, Bm06/Bm06	3
	13	1005630	(11089942-)	Fitting, Plstc, E90, Bm06/Pm06, Nyl	1
∇	14	1211537	( )	Filter, In- Line, Pf06/Pf06 080m 2.6l Epd	1
▲		1218885	( )	Gasket [Epdm, F/1211537]	1
▲		1218883	( )	Screen, Fltr, 80 Mesh, Ss [W/ Cage]	1
▲		613991	( )	Bowl, Clr, Short, F/1005302	1
	15	64743	(11089942-)	Fitting, Plstc, Str, Bm08/Pm06	2
	16	54333	(11089942-)	Clamp, Hose, Wormdrive, 0.31- 0.88d, .31w	2
	17	1048278	(11089942-)	Hose, Pvc, Clr, E90 0.63id 0.75od	1
	18	20950	(11089942-)	Fitting, Plstc, Str, Bm06/Bm06	1

∇ ASSEMBLY

▲ INCLUDED IN ASSEMBLY

STANDARD SOLUTION GROUP (PUSH QUICK CONNECTOR STYLE) (S/N 10000000 - 11089941)

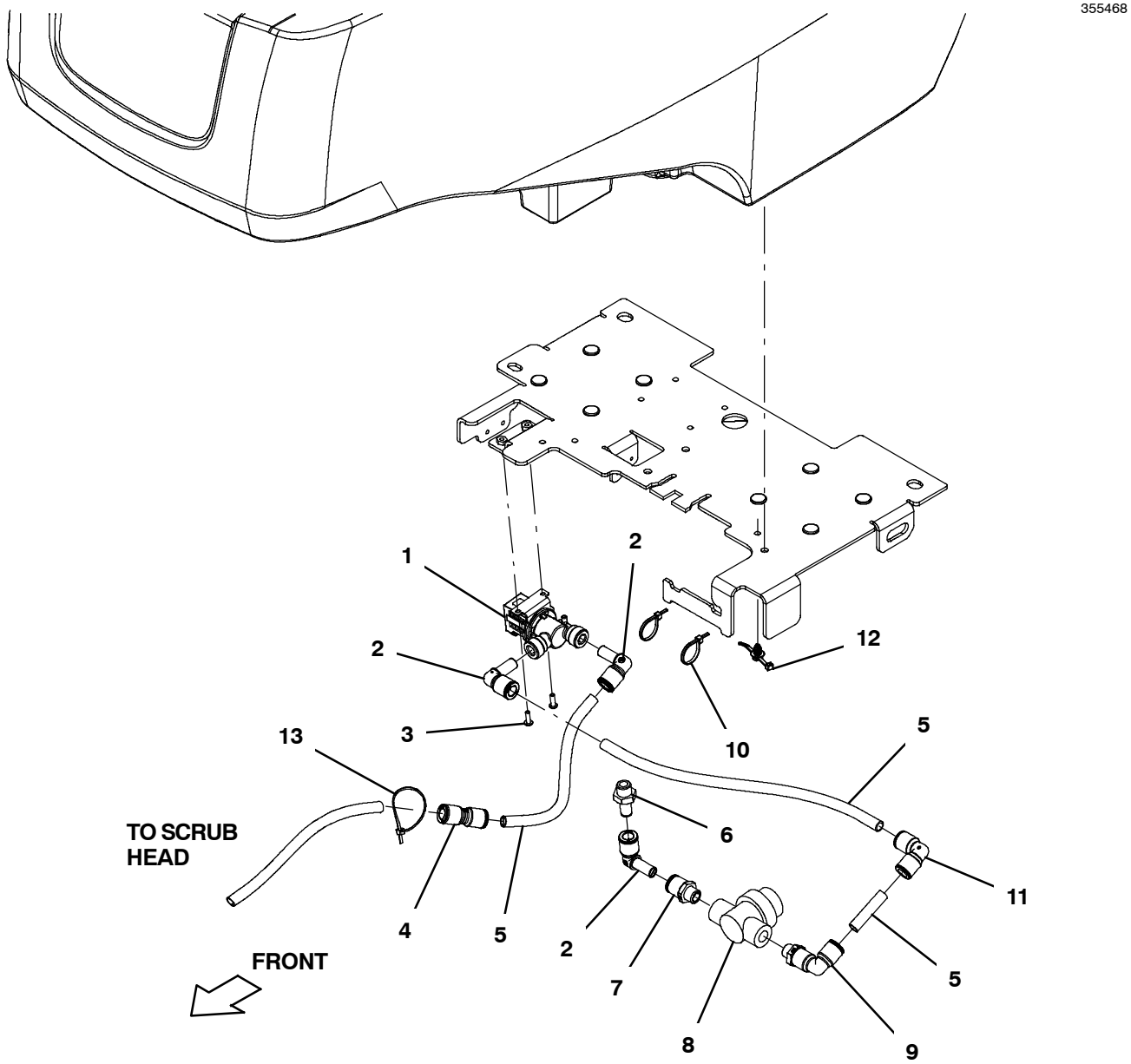

(S/N 10000000 - 10865726)

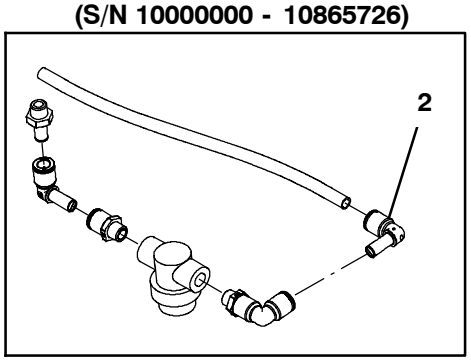

STANDARD SOLUTION GROUP (PUSH QUICK CONNECTOR STYLE) (S/N 10000000 - 11089941)

	Ref.	Part No.	Serial Number	Description	Qty.
	1	1211424	(10000000- 11089941)	Valve, Water, Solenoid, 24vdc Qf08/Qf08	1
	2	1212809	(10865727- 11089941)	Fitting, Plstc, E90, Qf08/Qm08	3
	2	1212809	(10000000- 10865726)	Fitting, Plstc, E90, Qf08/Qm08	4
	3	1205799	(10000000- 11089941)	Screw, Btn, M5 X 0.8 X 16, 8.8, Nl, Torx	2
	4	1212859	(10000000- 11089941)	Fitting, Plstc, Str, Qf08/Qf08	1
	5	9014145	(10000000- 11089941)	Hose, Afmkt, Pe, .375id .50od, 05ft	1
	6	1227552	(10000000- 11089941)	Fitting, Plstc, Str, Qm08/Pm06	1
	7	1212813	(10000000- 11089941)	Fitting, Plstc, Str, Qf08/Pm06	1
∇	8	1211537	( )	Filter, In- Line, Pf06/Pf06 080m 2.6l Epd	1
▲		1218885	( )	Gasket [Epdm, F/1211537]	1
▲		1218883	( )	Screen, Fltr, 80 Mesh, Ss [W/ Cage]	1
▲		613991	( )	Bowl, Clr, Short, F/1005302	1
	9	1212987	(10000000- 11089941)	Fitting, Plstc, E90, Qf08/Pm06, Swivel	1
	10	130773	( )	Tie, Cable, Nyl, 11.0l, .14w, 3.0 Max. D	2
	11	1221945	(10865727- 11089941)	Fitting, Plstc, E90, Qf08/Qf08	1
	12	1210807	(10865727-)	Wire, Tie [W/.25” Fir Tree Clip]	1
	13	130773	(10000000- 11089941)	Tie, Cable, Nyl, 11.0l, .14w, 3.0 Max. D	1

∇ ASSEMBLY

▲ INCLUDED IN ASSEMBLY

BATTERY CABLES GROUP, WET AND AGM BATTERY

355463

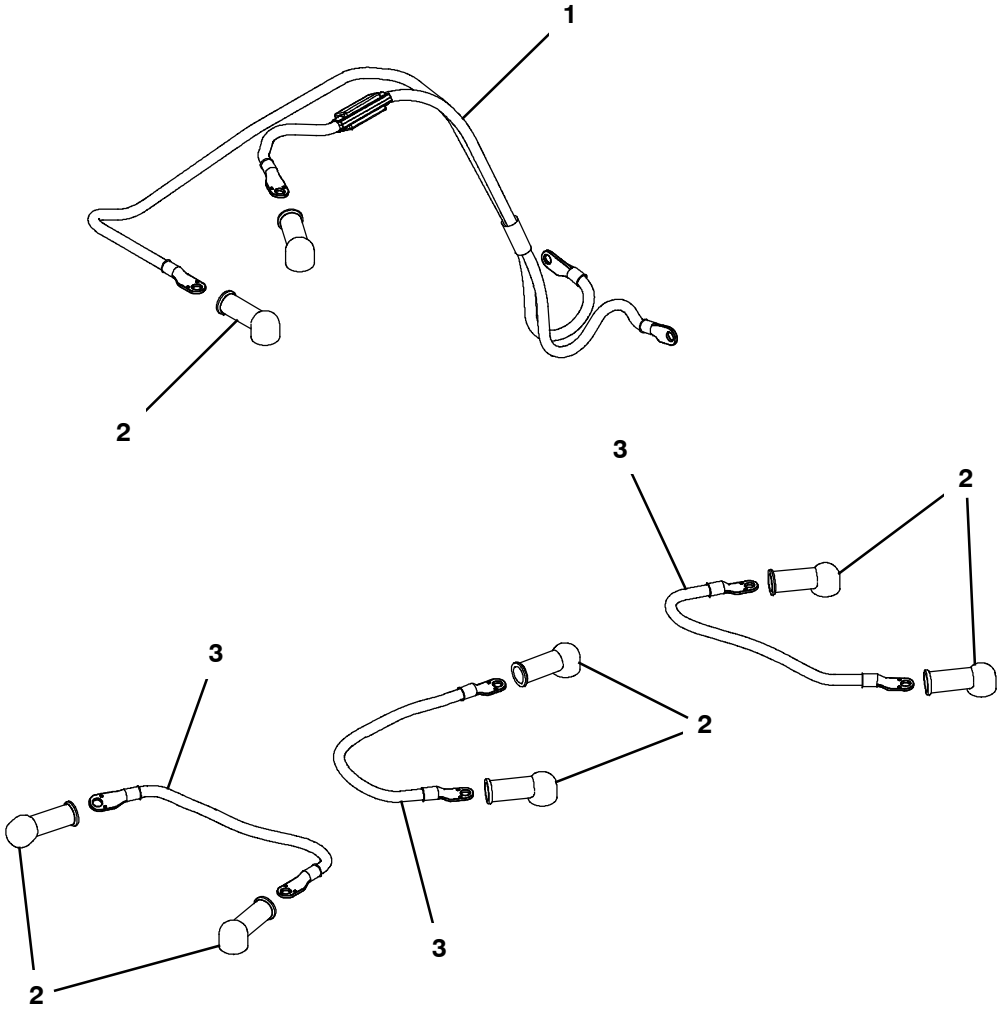

Ref.	Part No.	Serial Number	Description	Qty.
1	1074942	( )	Cable, Assy [T500,T500e]	1
2	611221	( )	Boot, Terminal, Battery, 25.4mm, Blk	8
3	4037638	( )	Cable, 04ga 18.0l Blk .34ring /.34ring	3

BATTERY CABLES GROUP, TPPL BATTERY

355810

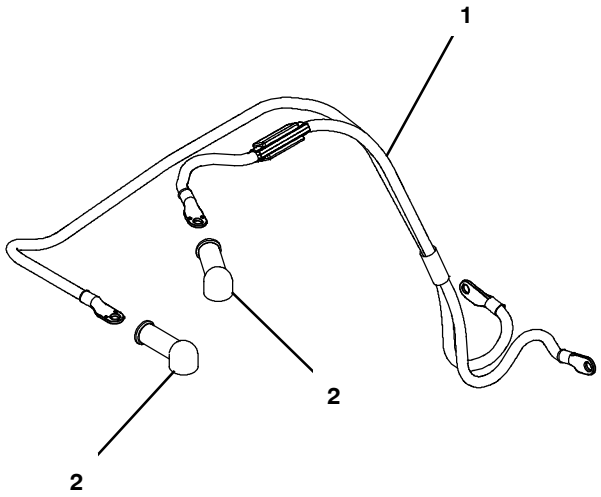

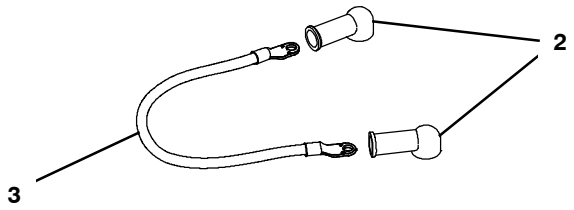

Ref.	Part No.	Serial Number	Description	Qty.
1	1076930	( )	Cable, Assy .31ring/.25ring [T500, T500e]	1
2	611221	( )	Boot, Terminal, Battery, 25.4mm, Blk	4
3	1076929	( )	Cable, 04ga 15.0l Blk, .25ring/.25ring	1

BATTERY CABLES GROUP, LITHIUM-ION BATTERY

355965

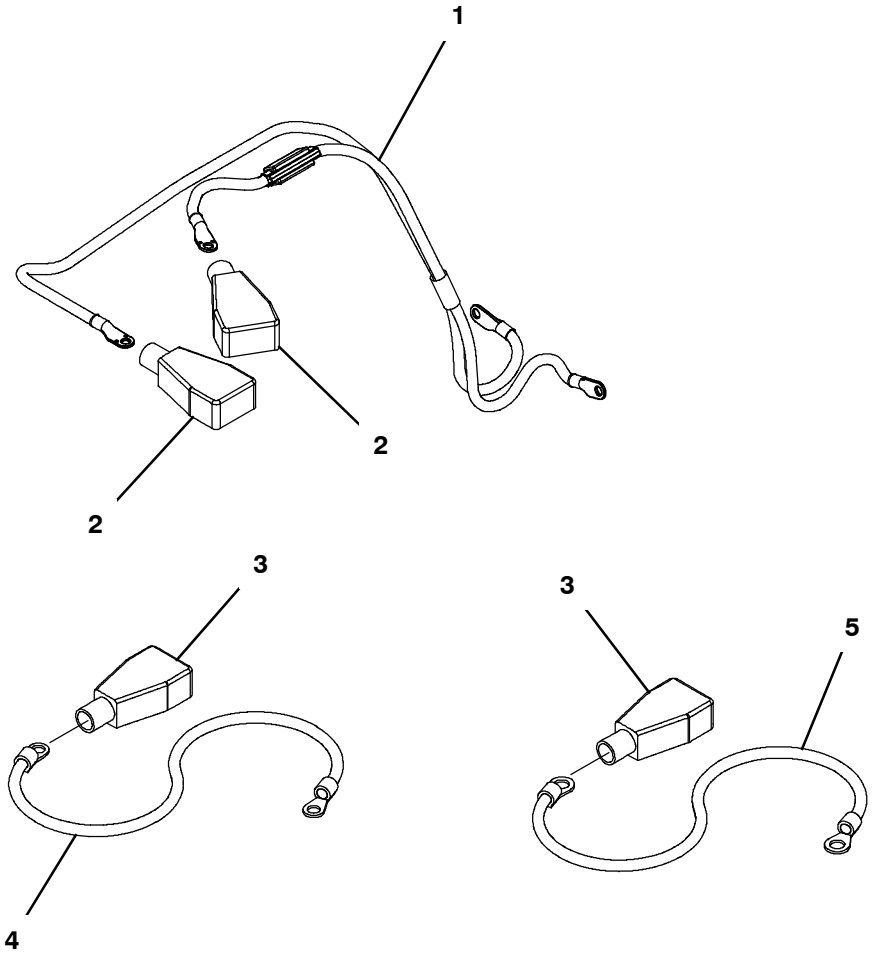

Ref.	Part No.	Serial Number	Description	Qty.
1	1266969	( )	Cable, Assy, [T500, T500e]	1
2	68872	( )	Boot, Terminal, Battery, 02-01ga, Blk	2
3	68872	( )	Boot, Terminal, Battery, 02-01ga, Blk (2 Battery System Only)	2
4	1077083	( )	Cable, 04ga 18.0l Red .41ring /.41ring (2 Battery System Only)	1
5	223364	( )	Cable, 04ga 18.0l Blk .34ring /.34ring (2 Battery System Only)	1

LABEL GROUP

355967

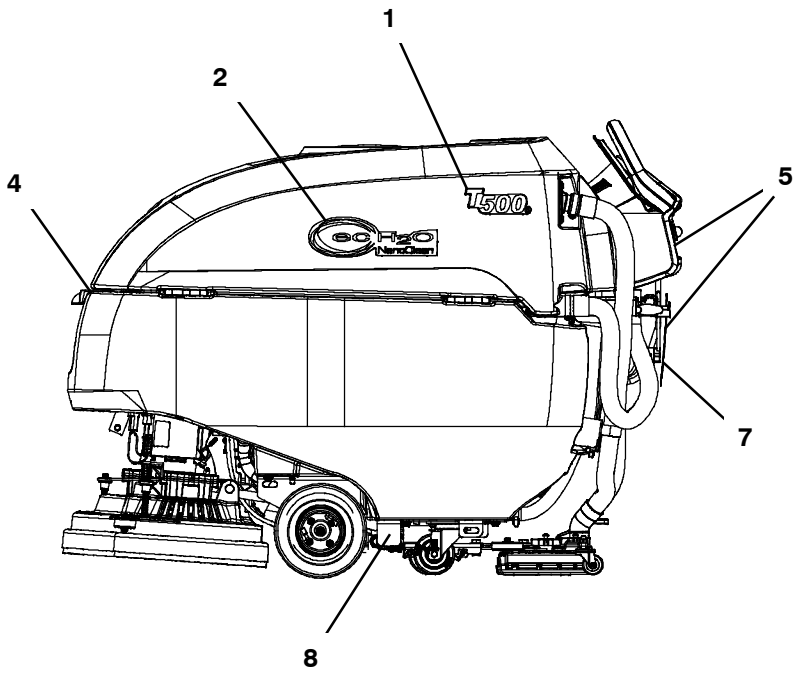

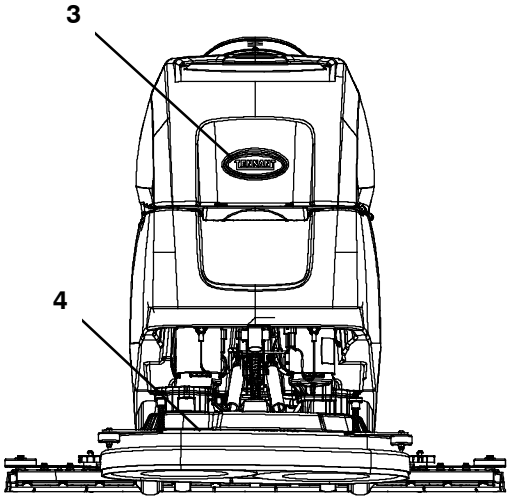

DISK & CYLINDRICAL HEAD

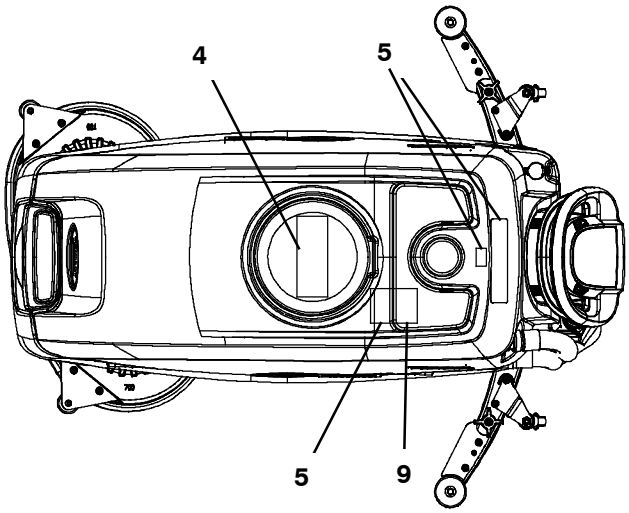

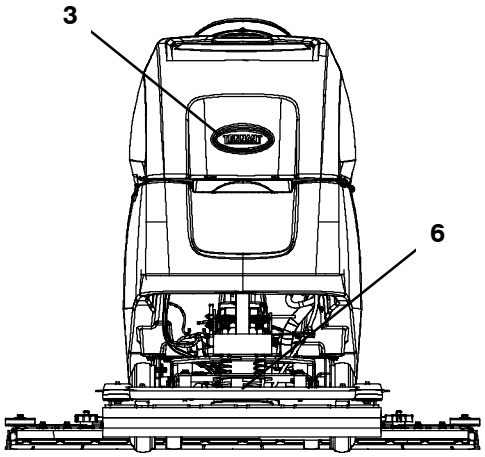

ORBITAL HEAD

Ref.	Part No.	Serial Number	Description	Qty.
1	1224984	( )	Label, T500e	2
2	1216520	( )	Label, Logo [Ech2o Nano]	2
3	1213114	( )	Label, Logo, 05.5l, Blk/Sil [Tennant]	1
4	1220962	( )	Label Sheet, Info/Hzrd [T500, Na]	1
5	4032428	(11078289-)	Label Sheet, Operational [T500/E/Ss500]	1
5	1220965	(10000000- 11078288)	Label Sheet, Operational [T500]	1
6	1224995	( )	Label, Orbital, Size, 70cm	1
7	1225763	( )	Label, Decal, Charger, Off- Board	1
8	1231798	(10865727-)	Label, Info, Filter	1
9	1266965	( )	Label, Hzrd, Battery [T500/E/Ss500, Li] (Lithium- Ion Batteries)	1

WIRE HARNESS GROUP

Part No.	Serial Number		Description	Qty.
1077059	(11101079-	)	Harness, Main, Ele [T500e]	1
1076839	(10995399- 11101078	)	Harness, Main, Ele [T500e] (Replaced By Kit 9022197 or With Telemetry Kit 9023004)	1
1075312	(10000000- 10995398	)	Harness, Main, Ele [T500e]	1
49309		)	Relay, 24vdc, 015a, Spdt No	2
1077061	(11101079-	)	Harness, Ele [Op. Station, T500e]	1
1075313	(10000000- 11101078	)	Harness, Ele [Op. Station, T500e] (Replaced By Kit 9022186 or With Telemetry Kit 9023003)	1
1072524		)	Harness, Ele [Bail Switch]	1
1075352	(10000000- 11101078	)	Harness, Ele [Telem, T500e] (Telemetry Option)	1
1076909	(10995399-	)	Harness, Ele, Adapter, Relay (TPPL Battery Option)	1
9022783		)	Harness, Replmt [Battery To Ui] (Lithium Battery Option)	1

∇ ASSEMBLY

▲ INCLUDED IN ASSEMBLY

BATTERY GROUP, WET 225AH

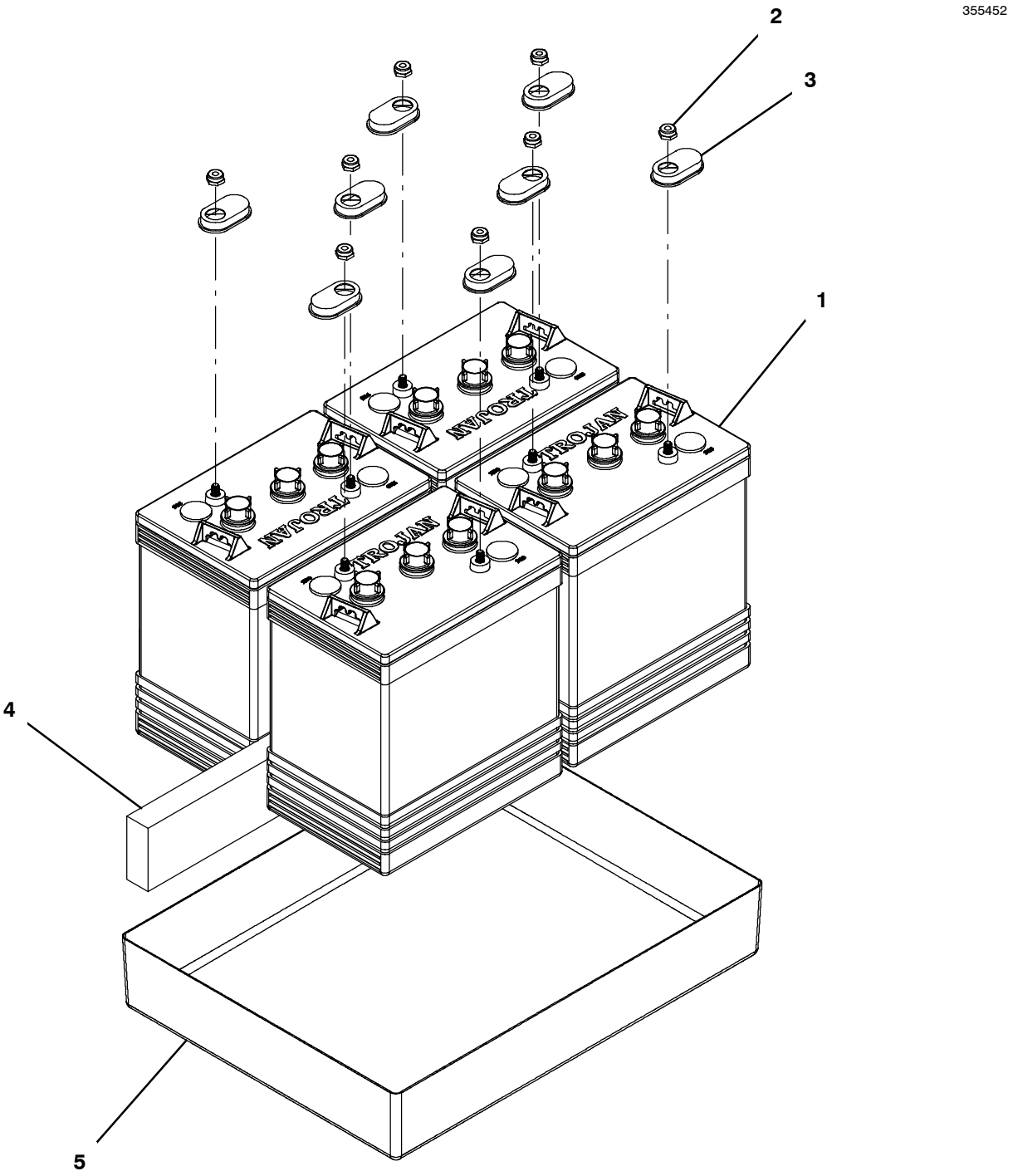

	Ref.	Part No.	Serial Number	Description	Qty.
∇	1	10155	( )	Battery, Wet, 06vdc	4
▲	2	87435	( )	Nut, Hex, Flexlock, .31- 18	2
	3	1041030	( )	Cap, Battery, Black [For 155ah]	8
	4	630375	( )	Spacer, Battery, Foam, 1.25 X 3.3 X 13.7	1
	5	1222318	( )	Tray, Battery, Trimmed [T500, Thick]	1

∇ ASSEMBLY

▲ INCLUDED IN ASSEMBLY

BATTERY GROUP, WET 260AH

355448

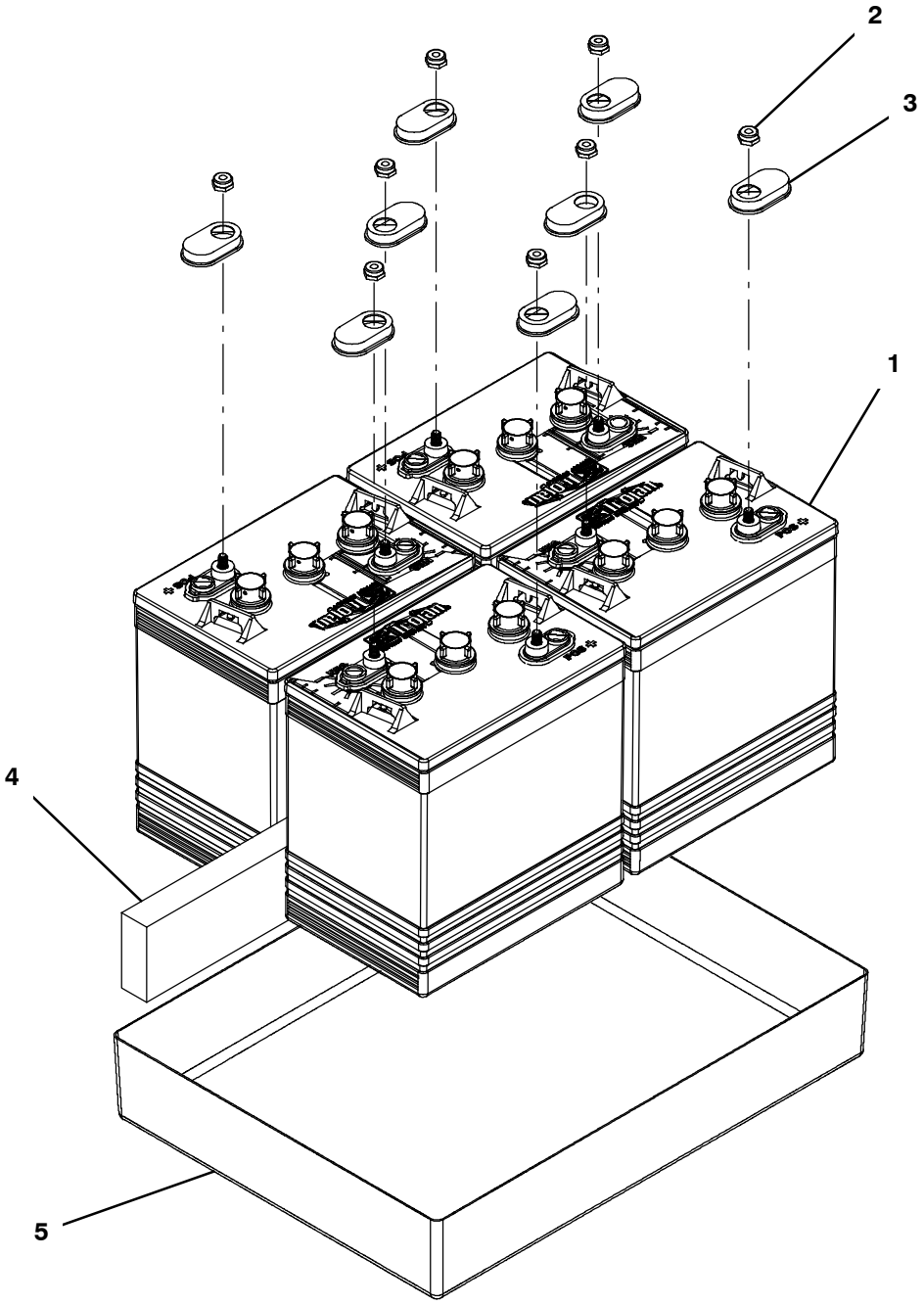

	Ref.	Part No.	Serial Number	Description	Qty.
∇	1	390825	( )	Battery, Wet, 06vdc 0244ah	4
▲	2	87435	( )	Nut, Hex, Flexlock, .31- 18	2
▲	3	1041030	( )	Cap, Battery, Black [For 155ah]	2
	4	630375	( )	Spacer, Battery, Foam, 1.25 X 3.3 X 13.7	1
	5	1222318	( )	Tray, Battery, Trimmed [T500, Thick]	1

∇ ASSEMBLY

▲ INCLUDED IN ASSEMBLY

BATTERY GROUP, AGM 210AH

355450

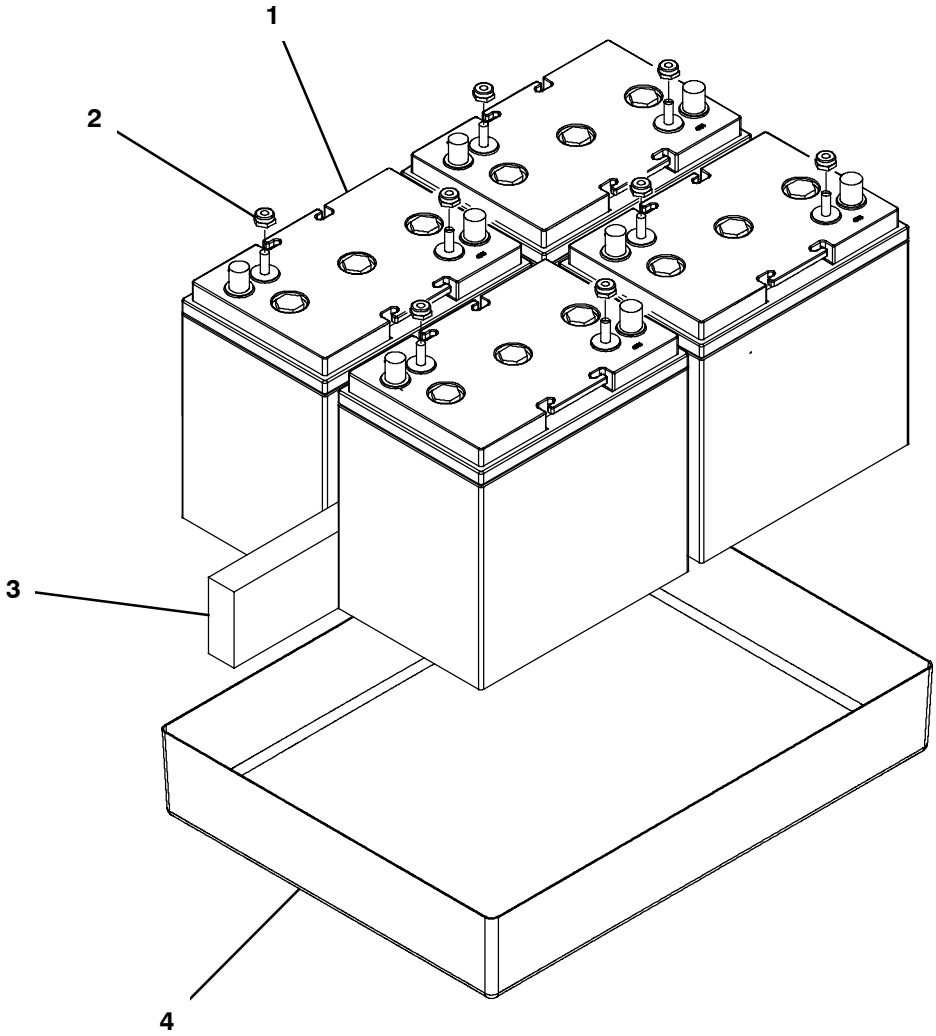

	Ref.	Part No.	Serial Number	Description	Qty.
∇	1	1262245	( )	Battery, Agm, 06vdc 0210ah	4
▲	2	87435	( )	Nut, Hex, Flexlock, .31- 18	2
	3	630375	( )	Spacer, Battery, Foam, 1.25 X 3.3 X 13.7	1
	4	1222318	( )	Tray, Battery, Trimmed [T500, Thick]	1

∇ ASSEMBLY

▲ INCLUDED IN ASSEMBLY

BATTERY GROUP, TPPL 183AH C/20

355804

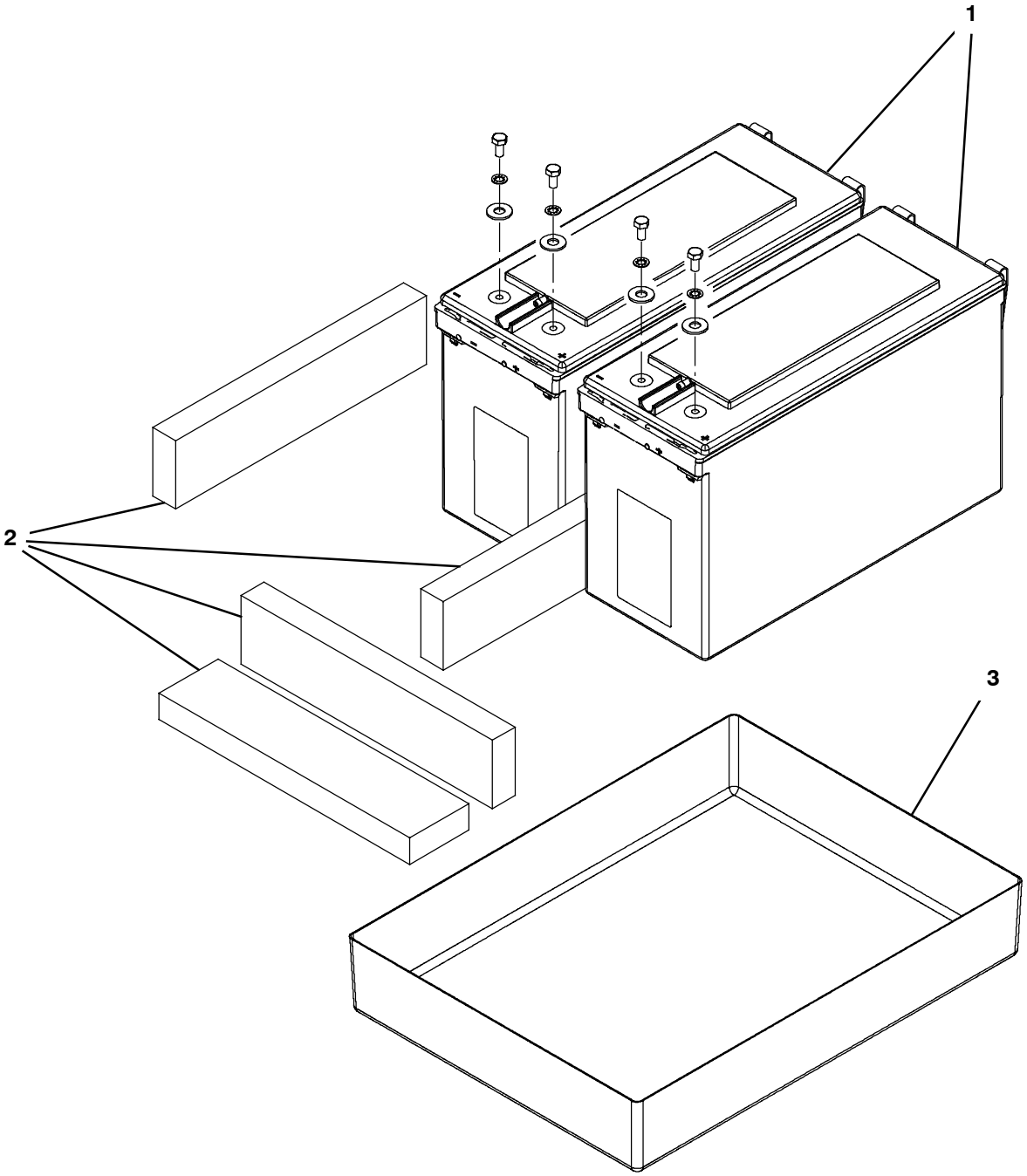

Ref.	Part No.	Serial Number	Description	Qty.
1	1254199	( )	Battery, Tppl, 12vdc, 183ah [C/20]	2
2	630375	( )	Spacer, Battery, Foam, 1.25 X 3.3 X 13.7	4
3	1222318	( )	Tray, Battery, Trimmed [T500, Thick]	1

BATTERY GROUP, 90AH 125 BAUD LITHIUM-ION (1 Battery System)

355963

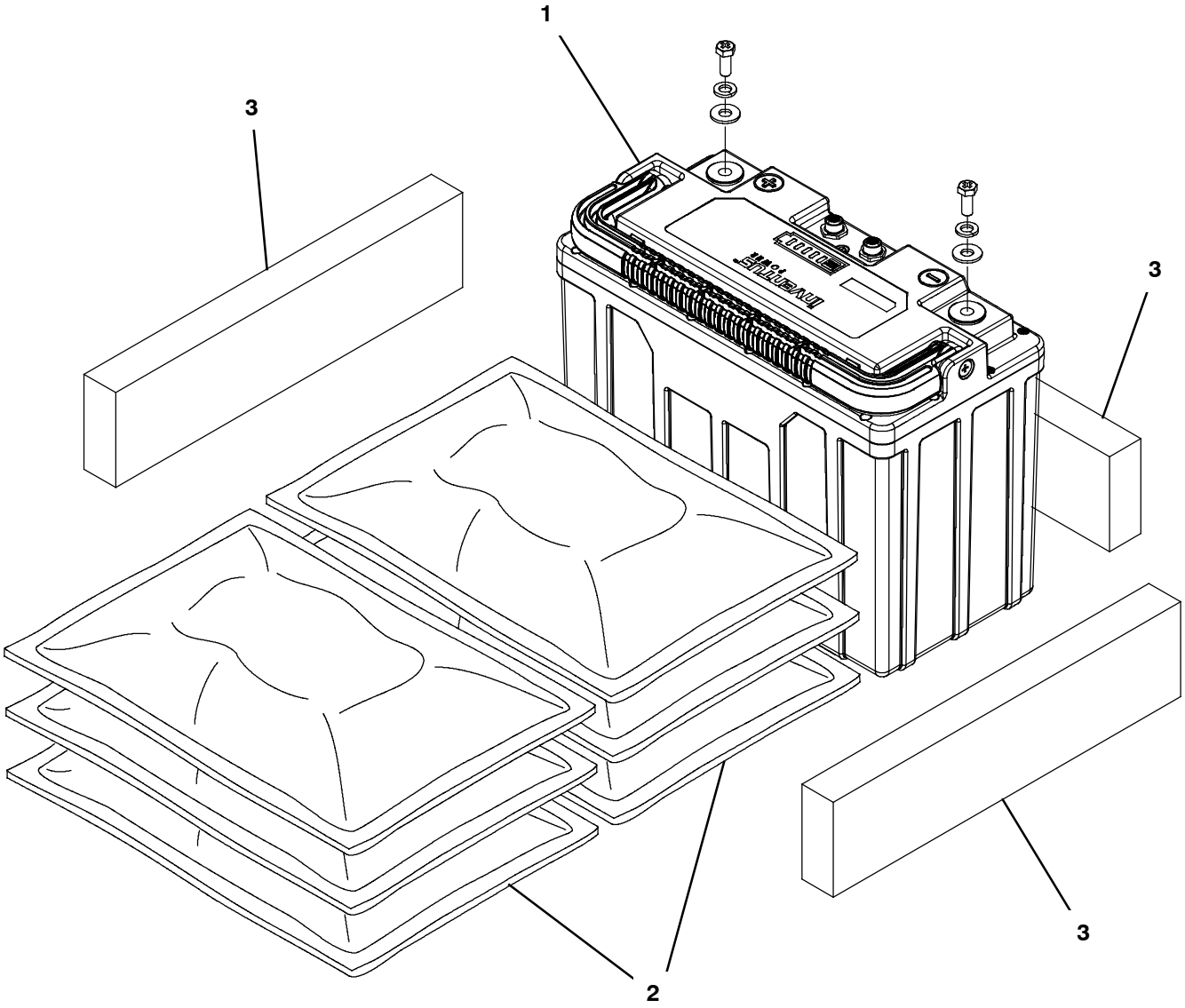

Ref.	Part No.	Serial Number	Description	Qty.
1	4045776	( )	Battery, Replmt, Li-Ion, 24v [T300/T500]	1
2	4209293	( )	Weight, Counter, Bag, 25 Lb	6
3	630375	( )	Spacer, Battery, Foam, 1.25 X 3.3 X 13.7	3

BATTERY GROUP, 90AH 125 BAUD LITHIUM-ION (2 Battery System)

355964

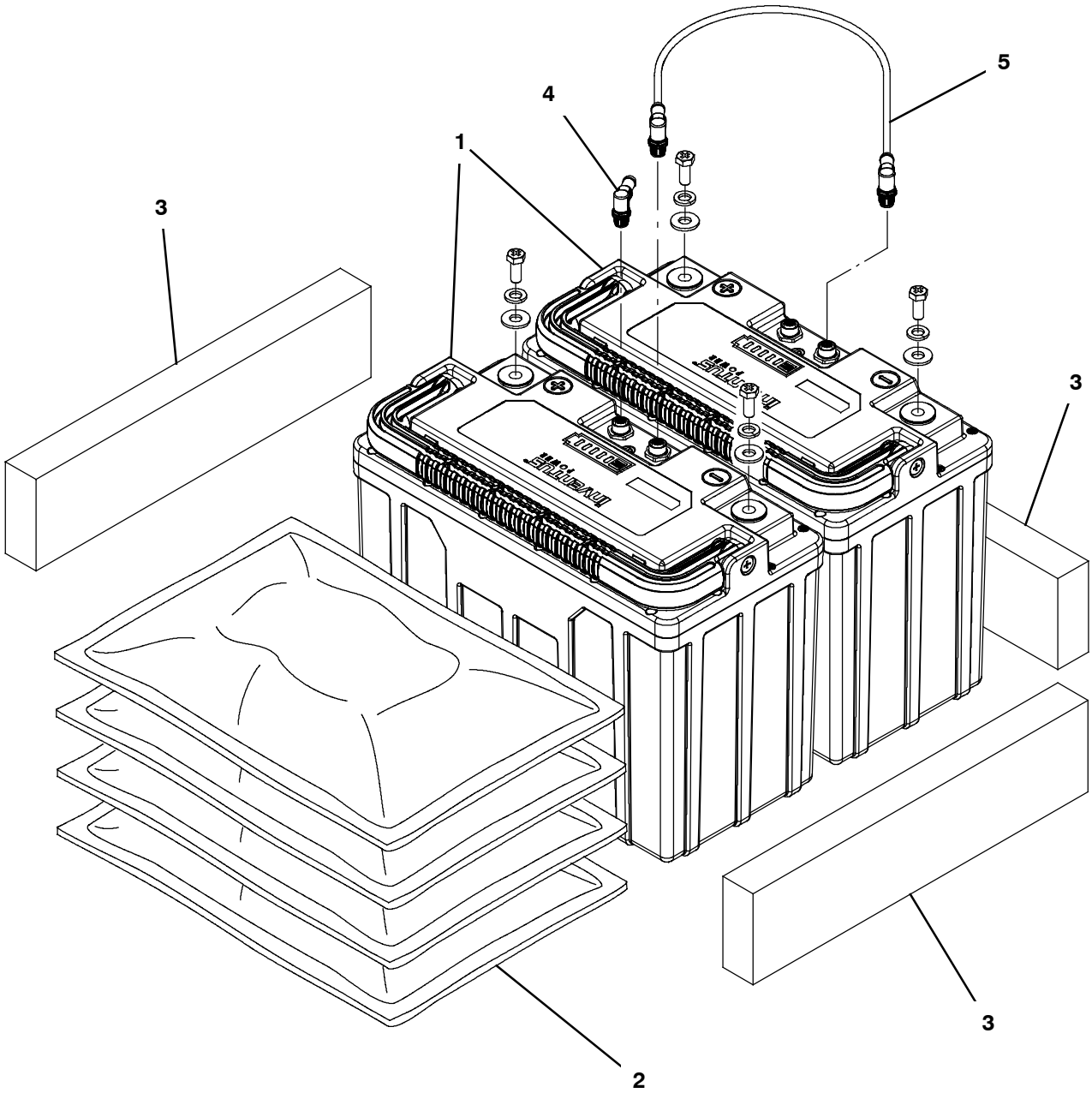

Ref.	Part No.	Serial Number	Description	Qty.
1	4045776	( )	Battery, Replmt, Li-Ion, 24v [T300/T500]	2
2	4209293	( )	Weight, Counter, Bag, 25 Lb	4
3	630375	( )	Spacer, Battery, Foam, 1.25 X 3.3 X 13.7	3
4	9022781	( )	Resistor, Plug, Replmt	1
5	1077084	( )	Cable Assy, 8 Pos, Male To Male, 19.7l	1

EXTENSION KIT, LITHIUM-ION BATTERY (1 Battery to 2 Battery System)

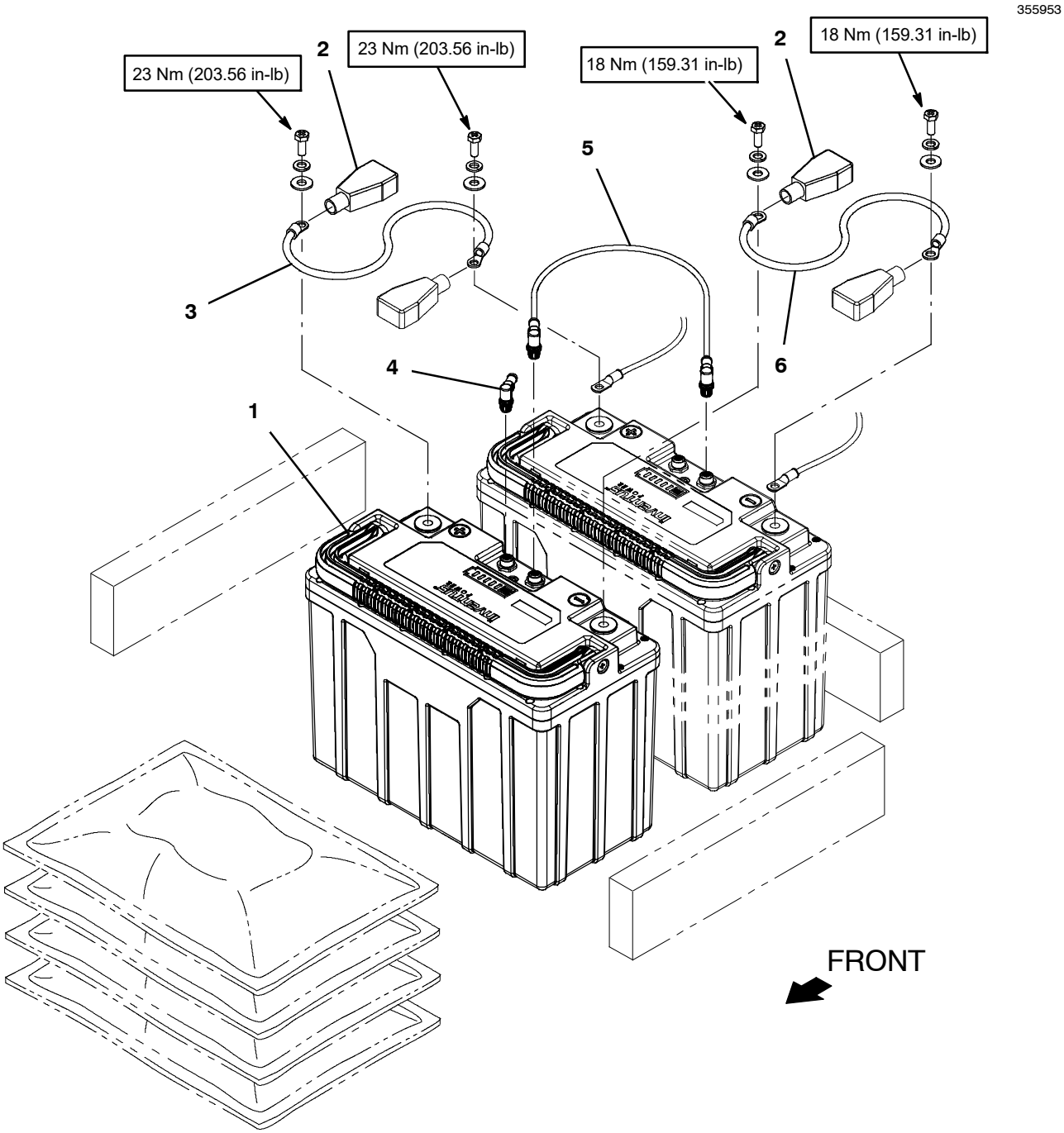

EXTENSION KIT, LITHIUM-ION BATTERY (1 Battery to 2 Battery System)

	Ref.	Part No.	Serial Number	Description	Qty.
∇		4184748	( )	Battery Kit, Li-Ion,24v,Extn [T300/T500]	1
▲	1	4045776	( )	Battery, Replmt, Li-Ion, 24v [T300/T500]	1
▲	2	68872	( )	Boot, Terminal, Battery, 02-01ga, Blk	2
▲	3	1077083	( )	Cable, 04ga 18.0l Red .41ring /.41ring	1
▲	4	9022781	( )	Resistor, Plug, Replmt	1
▲	5	1077084	( )	Cable Assy, 8 Pos, Male To Male, 19.7l	1
▲	6	223364	( )	Cable, 04ga 18.0l Blk .34ring /.34ring	1

∇ ASSEMBLY

▲ INCLUDED IN ASSEMBLY

MANUAL BATTERY WATERING SYSTEM

355801

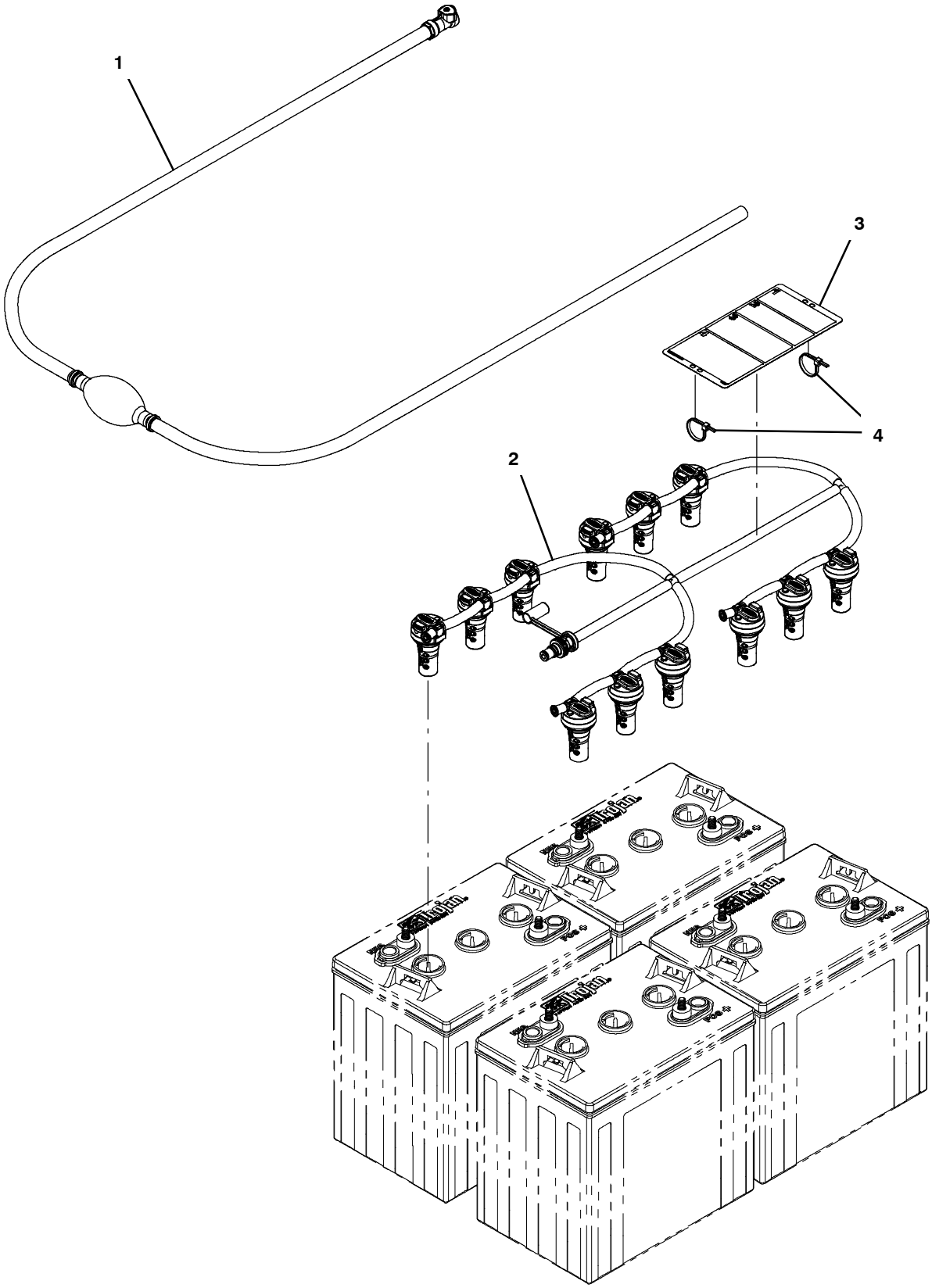

MANUAL BATTERY WATERING SYSTEM

	Ref.	Part No.	Serial Number	Description	Qty.
∇		9021123*	(10995399-)	Fill Kit, Battery, Manual, Ci [Trojan]	1
▲	1	1236295	(10995399-)	Pump, Hand, Battery	1
▲	2	9021081	(10995399-)	Manifold Kit, Water, 4 Btry [Trojan]	1
▲	3	1253250	(10995399-)	Label, Tag, Battery [Bwt Watering]	1
▲	4	130773	( )	Tie, Cable, Nyl, 11.0l, .14w, 3.0 Max. D	2

*THIS KIT IS INTENDED FOR USE WITH TROJAN® LEAD ACID BATTERIES ONLY.

∇ ASSEMBLY
▲ INCLUDED IN ASSEMBLY

HYDROLINK MANUAL BATTERY WATERING SYSTEM

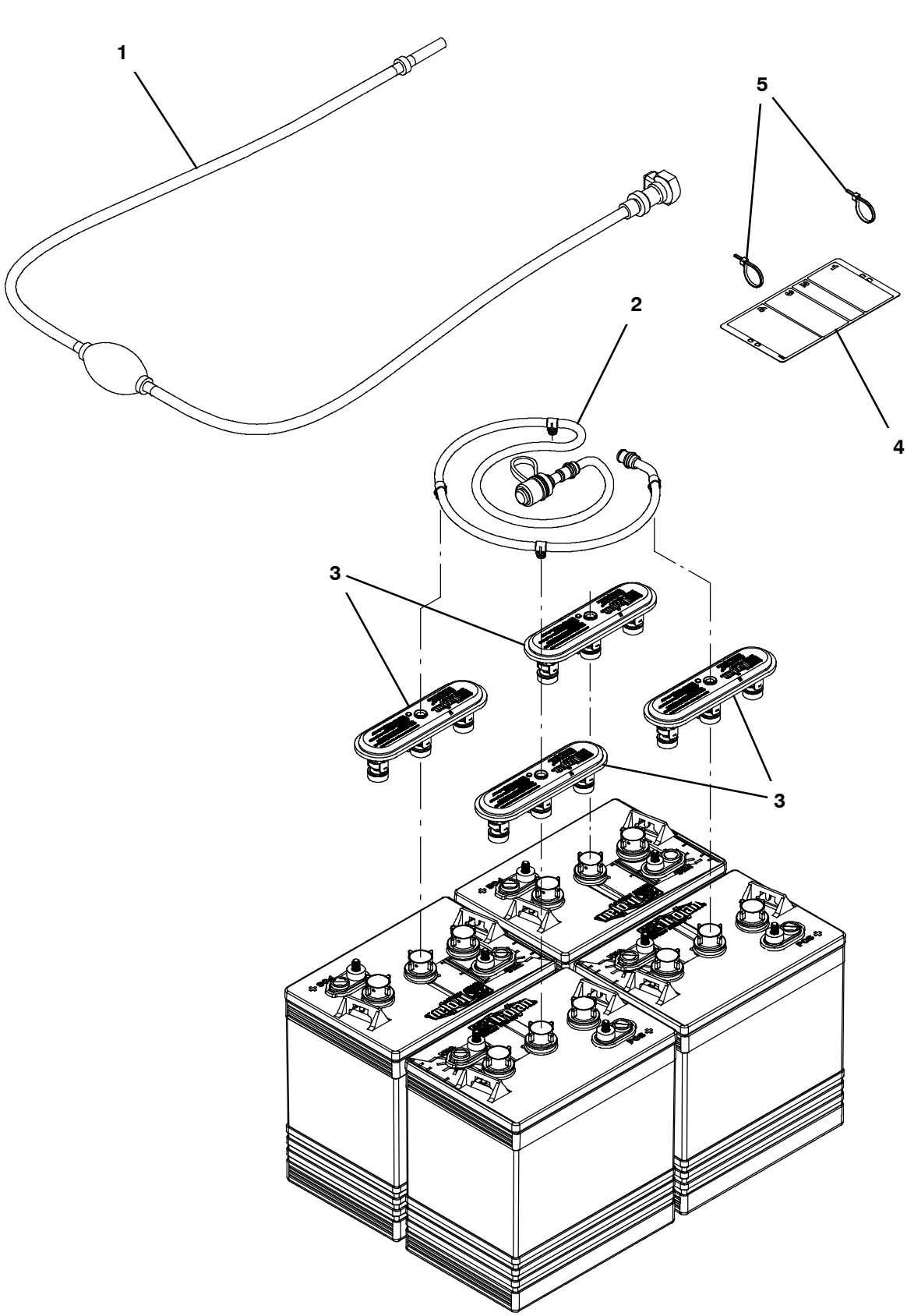

HYDROLINK MANUAL BATTERY WATERING SYSTEM

	Ref.	Part No.	Serial Number	Description	Qty.
∇		9010300*	(10000000- 10995398)	Battery Fill Kit, 24v, Ci [Hydrolink] (Replaced By 9021123)	1
▲	1	1058939	(10000000- 10995398)	Pump Kit, Fill, Battery	1
▲	2	1229544	(10000000- 10995398)	Tube, Water, Battery, 24vdc [Trojan]	1
▲	3	1204142	(10000000- 10995398)	Cap, Fill, Battery [Trojan]	4
▲	4	1071084	(10000000- 10995398)	Label, Tag, Battery [Hydrolink Watering]	1
▲	5	130773	( )	Tie, Cable, Nyl, 11.0l, .14w, 3.0 Max. D	2

*THIS KIT IS INTENDED FOR USE WITH TROJAN® LEAD ACID BATTERIES ONLY.

HYDROLINK® IS A REGISTERED TRADEMARK OF TROJAN BATTERY COMPANY.

∇ ASSEMBLY

▲ INCLUDED IN ASSEMBLY

SMART-FILL AUTOMATIC BATTERY WATERING SYSTEM
(S/N 10995399 -)

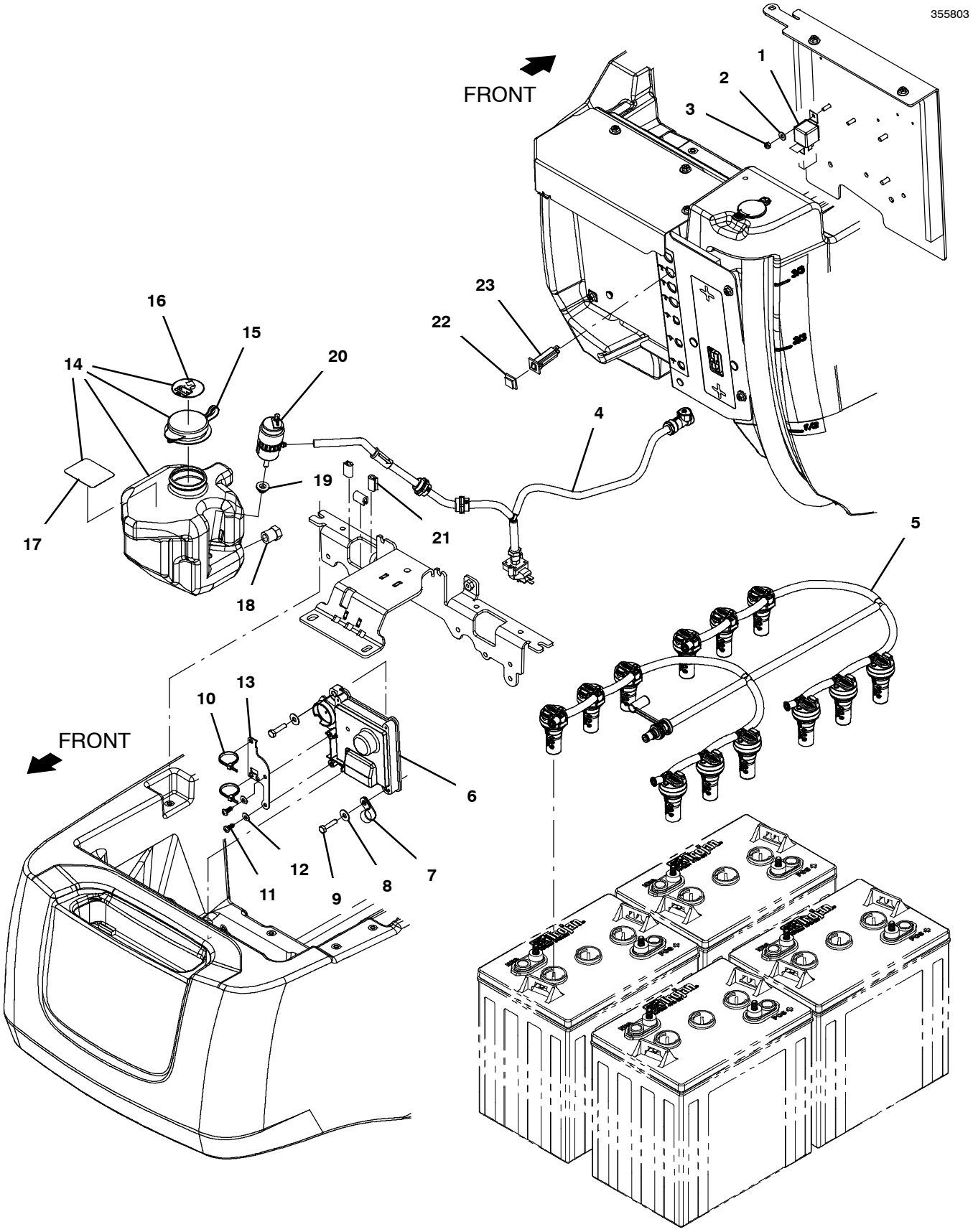

SMART-FILL AUTOMATIC BATTERY WATERING SYSTEM
(S/N 10995399 -)

	Ref.	Part No.	Serial Number	Description	Qty.
∇		9021125*	(10995399-)	Fill Kit, Battery, Auto, Ci [Trojan]	1
▲	1	1228510	( )	Relay, 24vdc, 80a, Spst No, Plug- In	1
▲	2	01683	( )	Washer, Flat, 10, Ss	1
▲	3	09739	( )	Nut, Hex, Lock, M5 X 0.80, Nl, Ss	1
▲	4	9018989	(10995399-)	Delivery Kit, Water, Battery	1
▲	5	9021081	(10995399-)	Manifold Kit, Water, 4 Btry [Trojan]	1
▲	6	9016770*	(10995399-)	Controller Kit, Battery, 24vdc, Ci [Abw] (See Breakdowns)	1
▲	7	40678- 1	(10995399-)	Clamp, Cable, Stl, 0.88d X 0.62w, 1hole	1
▲	8	01684	( )	Washer, Flat, 0.27b 0.69d .05, Ss	2
▲	9	1016005	( )	Screw, Hex, M6 X 1.00 X 25, Nl, Fl, Ss	2
▲	10	130773	( )	Tie, Cable, Nyl, 11.0l, .14w, 3.0 Max. D	2
▲	11	1018155	( )	Screw, Pan, Phl, M5 X 0.80 X 16, Tcut,Ss	2
▲	12	01683	( )	Washer, Flat, 10, Ss	2
▲	13	1252827	(10995399-)	Bracket, Mtg, Abw	1
▲∇	14	9021131	(10995399-)	Tank Kit, Battery Fill, Ci [W/ Pump]	1
▲▲	15	1224600	( )	Cap, Snap, 2.17d [Blue]	1
▲▲	16	1224988	( )	Label, Automated Battery Watering	1
▲▲	17	1233633	( )	Label, Detgt [Do Not Add]	1
▲▲	18	630146	( )	Fitting, Plug, Pm06, Hdpe	1
▲▲	19	1231338	(10995399-)	Grommet, Pump	1
▲▲	20	1231018	(10995399-)	Pump, In- Tank, 13.5vdc 3.5lpm	1
▲	21	1020168	( )	Molding, Afmkt, Trim, Pvc, .08 .11, 01ft	1
▲	22	1064191	( )	Boot, Circuitbreaker	1
▲	23	1064187	( )	Circuitbreaker, 10.0a, Resetable	1

*** Requires Tennant *True* service or an authorized Tennant service provider**.

∇ ASSEMBLY

▲ INCLUDED IN ASSEMBLY

SMART-FILL AUTOMATIC BATTERY WATERING SYSTEM
(S/N 10000000 - 10995398)

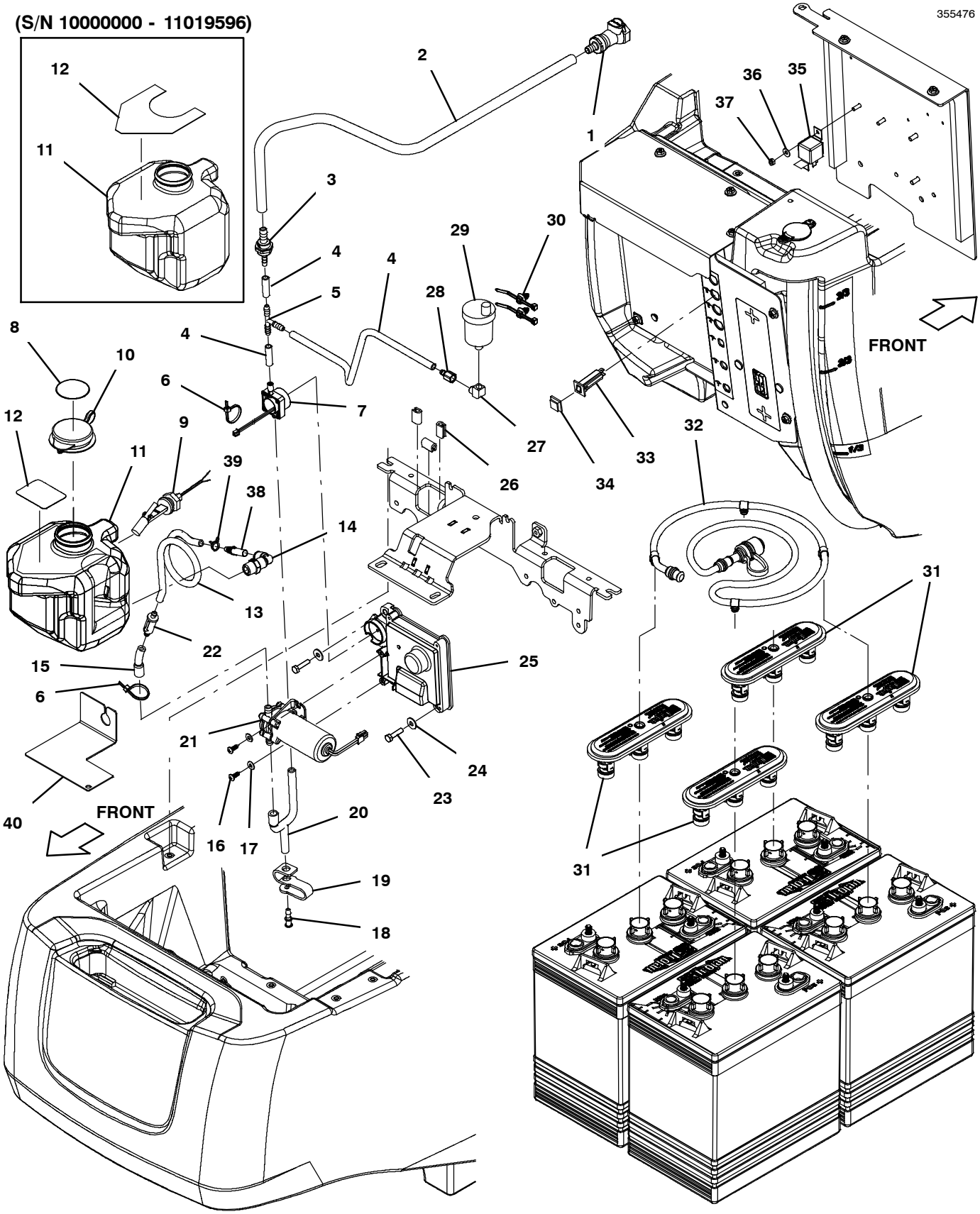

SMART-FILL AUTOMATIC BATTERY WATERING SYSTEM (S/N 10000000 - 10995398)

Ref.	Part No.	Serial Number	Description	Qty.
1	1221589	(10000000- 10995398)	Fitting, Plstc, Str, Bm06, Cplg, Fem[Hl]	1
2	1006416	(10000000- 10995398)	Hose, Afmkt, Pvc, Clr, 0.38id, 03ft	1
3	1225185	(10000000- 10995398)	Valve, Check, 0002psi Bm04/Bm06	1
4	1006415	(10000000- 10995398)	Hose, Afmkt, Pvc, Clr, 0.25id, 03ft	1
5	150713	(10000000- 10995398)	Fitting, Plstc, Tee, Bm04/Bm04/Bm04	1
6	130773	( )	Tie, Cable, Nyl, 11.0l, .14w, 3.0 Max. D	2
7	9022735	(10000000- 10995398)	Service Kit, Meter, Flow	1
8	1224988	( )	Label, Automated Battery Watering	1
9	1212430	(10000000- 10995398)	Sensor, Level, Liq, 30watt, Spst	1
10	1224600	( )	Cap, Snap, 2.17d [Blue]	1
11	1252606	(11019597-)	Tank, 2.3l, Trimmed, Se	1
11	1217453	(10000000- 11019596)	Tank [2.5 Liter] (Replaced By 1252606)	1
12	1233633	(11019597-)	Label, Detgt [Do Not Add]	1
12	1228813	(10000000- 11019596)	Label, Warning, No Detgt (Replaced By 1233633)	1
13	1006415	(10000000- 10995398)	Hose, Afmkt, Pvc, Clr, 0.25id, 03ft	1
14	1212812	(10000000- 10995398)	Fitting, Plstc, E90, Qf06/Pm06, Swivel	1
15	1224108	(10000000- 10995398)	Hose, Mold, Bm04/Bm06	1
16	1018155	( )	Screw, Pan, Phl, M5 X 0.80 X 16, Tcut,Ss	2
17	01683	( )	Washer, Flat, 10, Ss	2
18	1228042	(10000000- 10995398)	Fitting, Plstc, Cap, Bm03 [T500]	1
19	1228043	(10000000- 10995398)	Strap, Retaining, Cap [T500]	1
20	1224016	(10000000- 10995398)	Hose, Molded, Bm04/Bm06	1
21	1220042	(10000000- 10995398)	Pump, Fill, Battery	1
22	1222924	(10000000- 10995398)	Filter, In- Line, Bm04/Bm04, 100mic, 2.0l	1
23	1016005	( )	Screw, Hex, M6 X 1.00 X 25, Nl, Fl, Ss	2
24	01684	( )	Washer, Flat, 0.27b 0.69d .05, Ss	2
25	9018008*	(10000000- 10995398)	Kit, Module, Abw, Ci (See Breakdowns) (Replaced By 9016770)	1
26	1020168	( )	Molding, Afmkt, Trim, Pvc, .08 .11, 01ft	1
27	150407	(10000000- 10995398)	Fitting, Brs, E90, Pf02/Pm02 [Street]	1
28	1040254	(10000000- 10995398)	Fitting, Brs, Str, Bm04/Pf02	1
29	1017386	(10000000- 10995398)	Valve, Vent, Air, Float Type	1
30	1210807	(10000000- 10995398)	Wire, Tie [W/.25” Fir Tree Clip]	2
31	1204142	(10000000- 10995398)	Cap, Fill, Battery [Trojan]	4
32	1229544	(10000000- 10995398)	Tube, Water, Battery, 24vdc [Trojan]	1
33	1064187	( )	Circuitbreaker, 10.0a, Resetable	1
34	1064191	( )	Boot, Circuitbreaker	1
35	1228510	( )	Relay, 24vdc, 80a, Spst No, Plug- In	1
36	01683	( )	Washer, Flat, 10, Ss	1
37	09739	( )	Nut, Hex, Lock, M5 X 0.80, Nl, Ss	1
38	1212857	(10000000- 10995398)	Fitting, Plstc, Str, Qm06/Bm04	1
39	613735	(10000000- 10995398)	Clamp, Hose, Wir, .40 - .42, Yel	1
40	1243106	(10000000- 10995398)	Plate, Shield, Switch	1

*** Requires Tennant *True* service or an authorized Tennant service provider**.

CONSOLE PANEL, MEMBRANE, WITH TELEMETRY
(S/N 11101079 -)

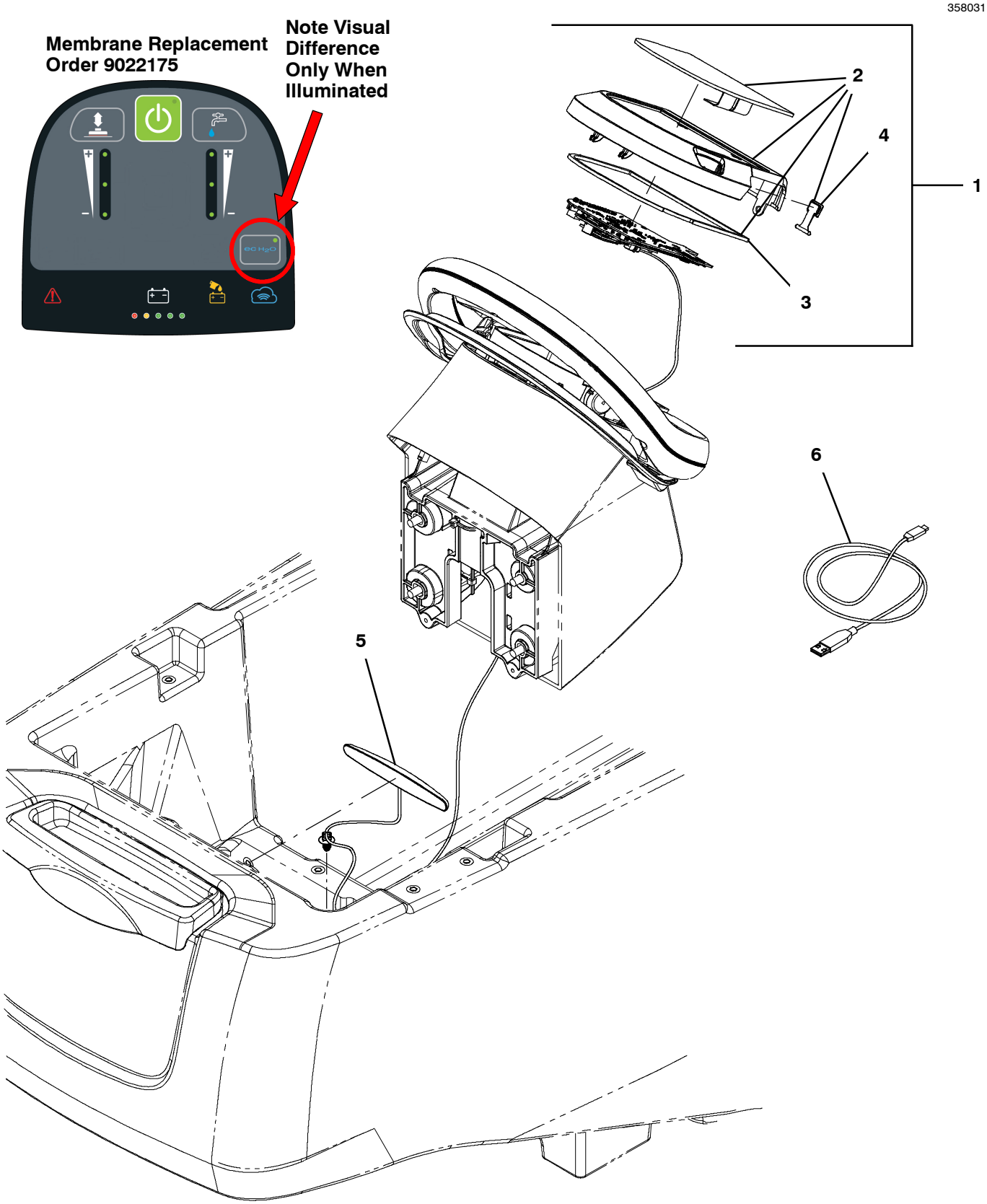

CONSOLE PANEL, MEMBRANE, WITH TELEMETRY
(S/N 11101079 -)

	Ref.	Part No.	Serial Number	Description	Qty.
∇	1	9021920*	(11101079-)	Bezel Kit, Mem, Tele, Ci[T500e/T600e]	1
▲∇	2	9022175**	(11101079-)	Screen Kit, Memb, Ci [T500e/Ss500/T600e]	1
▲▲	3	1245824	(MAR2020-)	Gasket, Console	1
▲▲	4	1205618	( )	Cap, Usb	1
▲	5	1247522	(11101079-)	Antenna, Telem [4g, 72”]	1
	6	1071235	( )	Cable [Usb, 2m, A- Male To Mini- B- Male]	1

*** Requires Tennant *True* service or an authorized Tennant service provider**.

**** Before Ordering Screen Kit Confirm Screen Visually Matches Correct Screen Image**.

∇ ASSEMBLY

▲ INCLUDED IN ASSEMBLY

CONSOLE PANEL, MEMBRANE, WITH TELEMETRY
(S/N 10000000 - 11101078)

358033

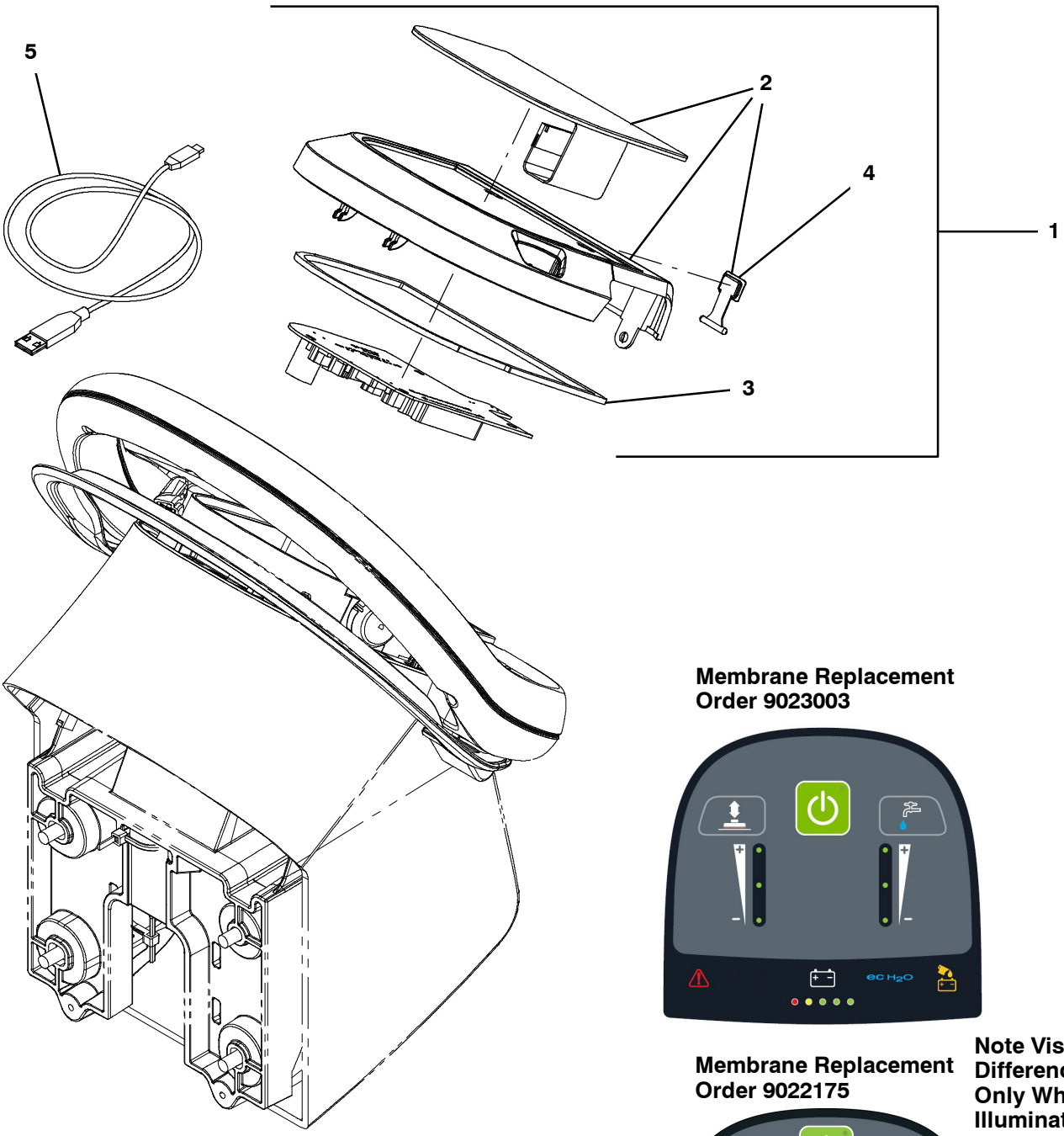

Membrane Replacement Order 9023003

Membrane Replacement Order 9022175

Note Visual Difference Only When Illuminated

CONSOLE PANEL, MEMBRANE, WITH TELEMETRY (S/N 10000000 - 11101078)

	Ref.	Part No.	Serial Number	Description	Qty.
∇	1	9015780*	(10000000- 11101078)	Bezel Kit, Membrane [T500e, T600e] (Replaced By 9023003*)	1
▲∇	2	9015781**	(10000000- 11101078)	Screen Kit, Memebrane, CI [T500e, T600e] (Replaced By 9023003*)	1
▲▲	3	1245824	(MAR2020-)	Gasket, Console	1
▲▲	4	1205618	( )	Cap, Usb	1
	5	1071235	( )	Cable [Usb, 2m, A- Male To Mini- B- Male]	1

*** Requires Tennant *True* service or an authorized Tennant service provider**.

**** Before Ordering Screen Kit Confirm Screen Visually Matches Correct Screen Image**.

∇ ASSEMBLY

▲ INCLUDED IN ASSEMBLY

ELECTRICAL GROUP, TELEMETRY
(S/N 10000000 - 11101078)

355466

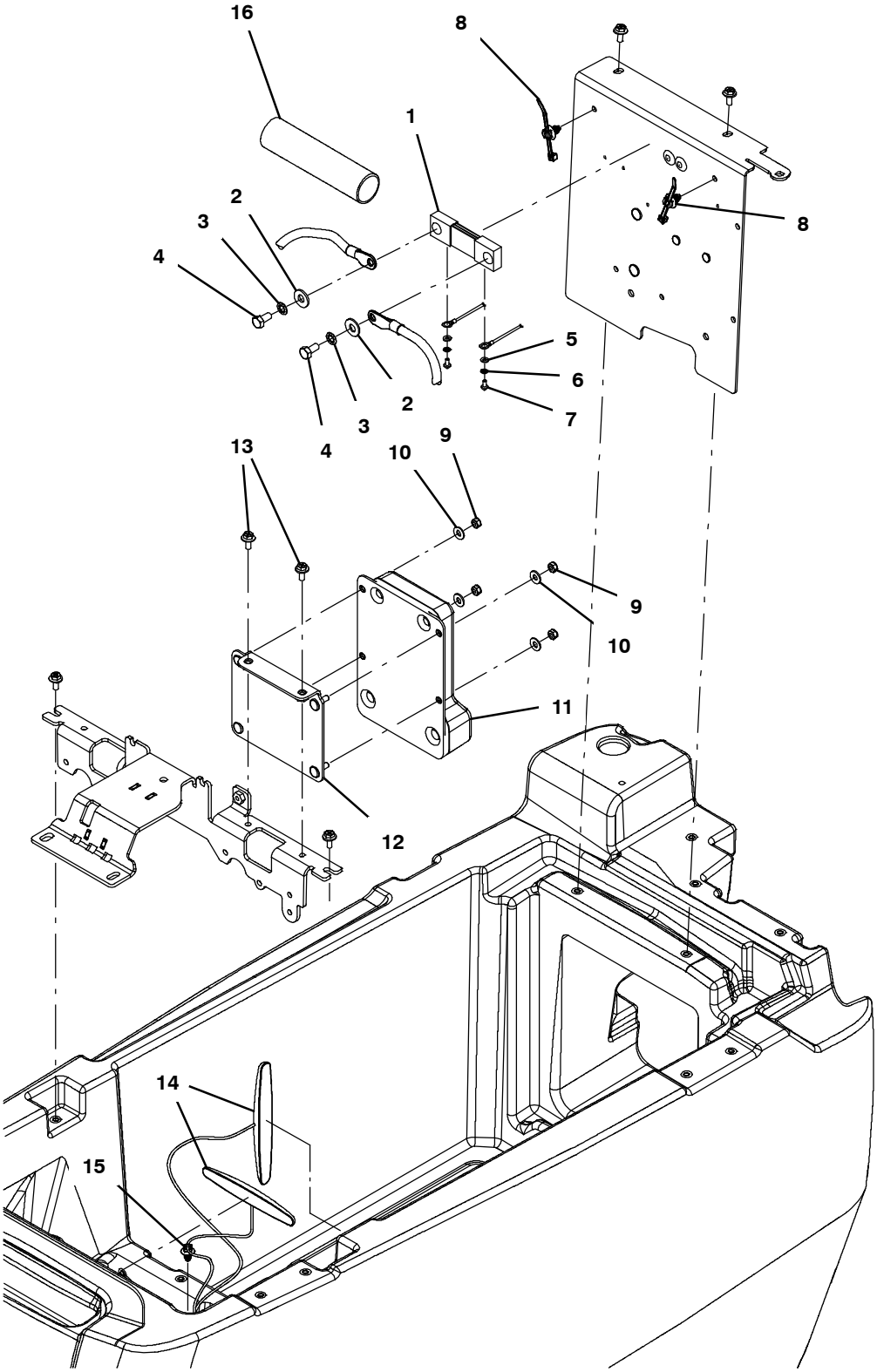

ELECTRICAL GROUP, TELEMETRY
(S/N 10000000 - 11101078)

Ref.	Part No.	Serial Number	Description	Qty.
1	1217304	(10000000- 11101078)	Shunt [Empro, 250amp/50mv, Metric]	1
2	01685	( )	Washer, Flat, 0.38b 0.88d .08, Ss	2
3	43952	( )	Washer, Lock, Int, 0.31, Ss	2
4	15675	( )	Screw, Hex, M8 X 1.25 X 16, Ss	2
5	41578	( )	Washer, Flat, 06, Ss	2
6	02938	( )	Washer, Lock, Int, 08, Ss	2
7	391403	( )	Screw, Pan, Phl, M4 X 0.70 X 8, Ss	2
8	1210807	( )	Wire, Tie [W/.25” Fir Tree Clip]	2
9	08712	( )	Nut, Hex, Lock, M6 X 1.00, Nl, Ss	4
10	32483	( )	Washer, Flat, 0.25, Sae	4
11	9010085	(10000000- 11101078)	Control Box Assy Kit, Replmt, Telem[Usa] (Replaced By Kits 9021920* & 9022186*)	1
12	1225123	(10000000- 11101078)	Bracket Wldt, Control Box	1
13	1034731	( )	Screw, Hex, M6 X 1.00 X 16, Sems, Ss	2
14	1247569	(10982289- 11101078)	Antenna, Telem [4g, 36”]	2
14	315724	(10000000- 10982288)	Antenna, Telem, 18.0 In [Gprs]	1
15	1210807	( )	Wire, Tie [W/.25” Fir Tree Clip]	1
16	1217818	(10000000- 11101078)	Sleeve, Heatshrink, 1.50id, 07.0l	1

*** Requires Tennant *True* service or an authorized Tennant service provider**.

BATTERY CABLES GROUP, TELEMETRY, AGM AND WET (S/N 10000000 - 11101078)

355464

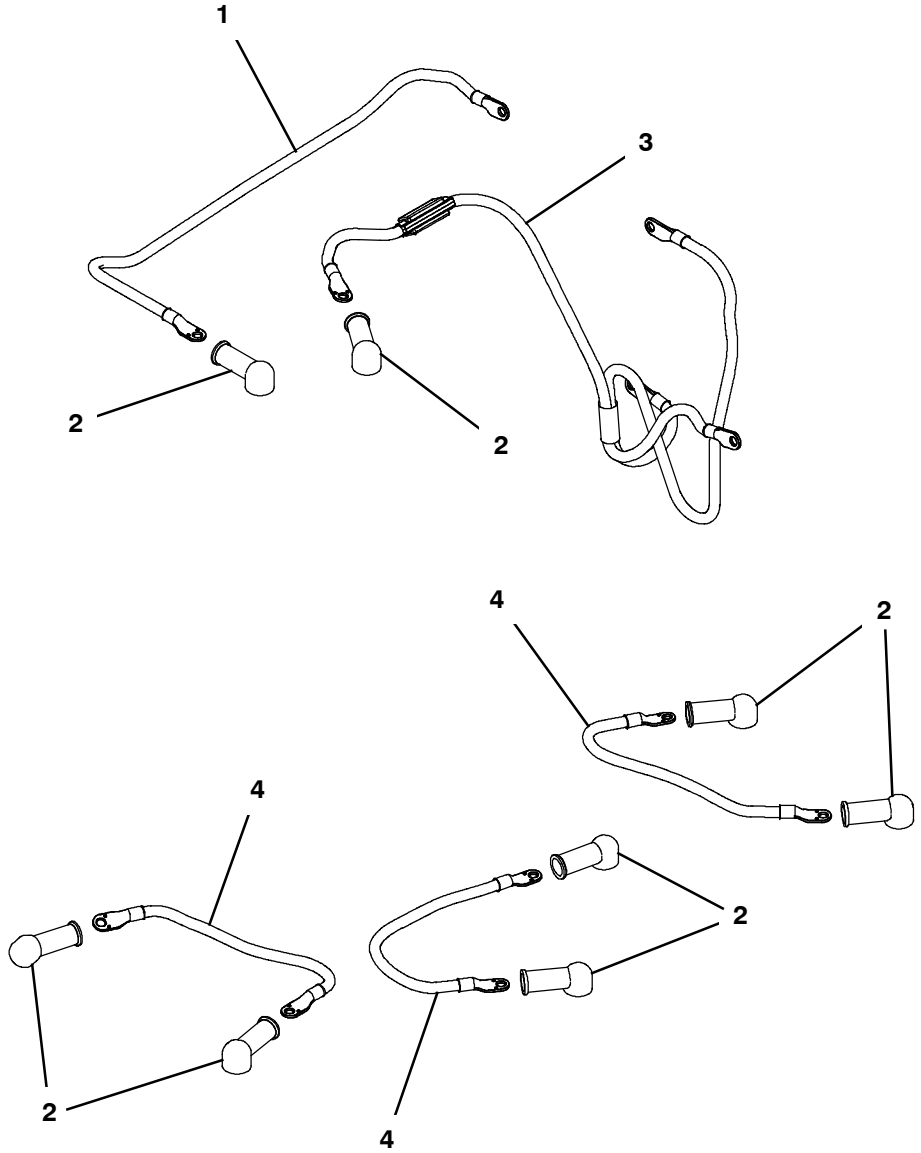

Ref.	Part No.	Serial Number	Description	Qty.
1	1070498	(10000000- 11101078)	Cable, 4ga, Blk [6200e, Telemetry]	1
2	611221	( )	Boot, Terminal, Battery, 25.4mm, Blk	8
3	1074942	( )	Cable, Assy [T500,T500e]	1
4	4037638	( )	Cable, 04ga 18.0l Blk .34ring /.34ring	3

BATTERY CABLES GROUP, TELEMETRY, TPPL BATTERY (S/N 10000000 - 11101078)

355809

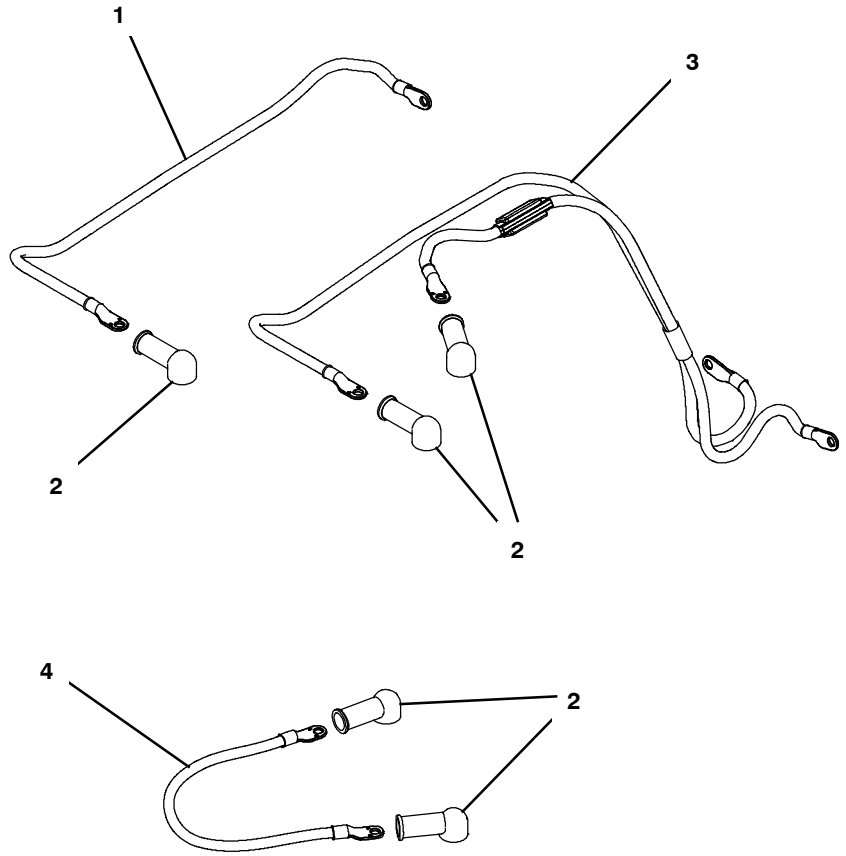

Ref.	Part No.	Serial Number	Description	Qty.
1	1076928	(10000000- 11101078)	Cable,4ga 23.6l Blk, .31ring/.25ring (Replaced By Kit 4186976)	1
2	611221	( )	Boot, Terminal, Battery, 25.4mm, Blk	5
3	1076935	(10000000- 11101078)	Cable, Assy .31ring/.25ring[T500e,Shunt] (Replaced By Kit 4186976)	1
4	1076929	( )	Cable, 04ga 15.0l Blk, .25ring/.25ring	1

PINCH CUFF SCREW CAP DRAIN HOSE GROUP

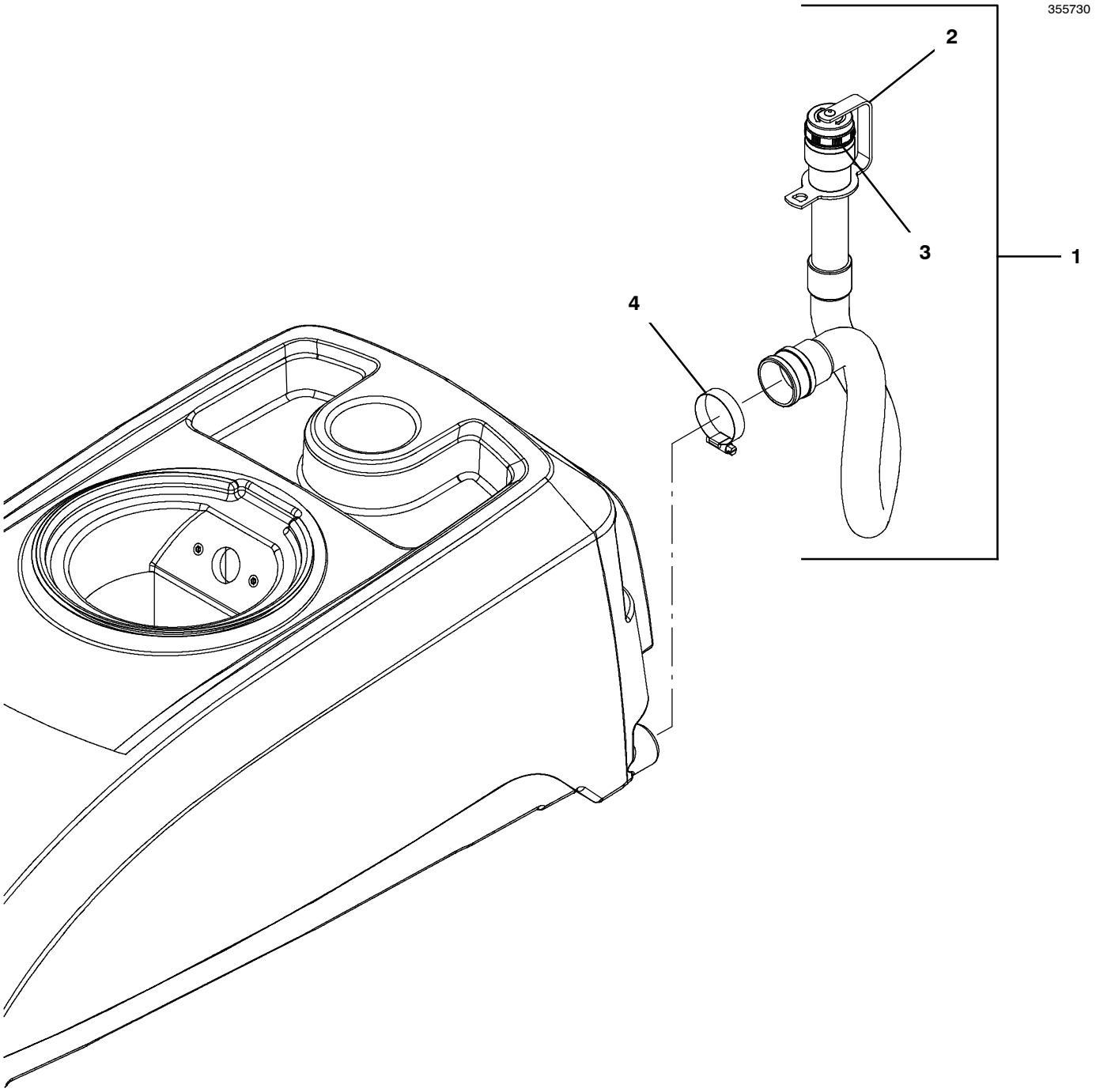

PINCH CUFF SCREW CAP DRAIN HOSE GROUP

	Ref.	Part No.	Serial Number	Description	Qty.
∇	1	1247144	(10951746- 10972171)	Hose Assy, Drain, 1.5id X 21.0l [Pu] (Gray) (No Longer Available - Replaced by 1248221 Black PVC)	1
▲∇	2	1247319	(10951746- 10972171)	Cap, Drain Assy, D- Ring [Gray] (No Longer Available - Replaced by 1248221 Black PVC)	1
▲▲	3	1008637	( )	Seal, Org, 1.48id 1.76od	1
	4	22297	( )	Clamp, Hose, Wormdrive, 1.56- 2.50d, .50w	1

∇ ASSEMBLY

▲ INCLUDED IN ASSEMBLY

CONTROL VALVE DRAIN HOSE GROUP

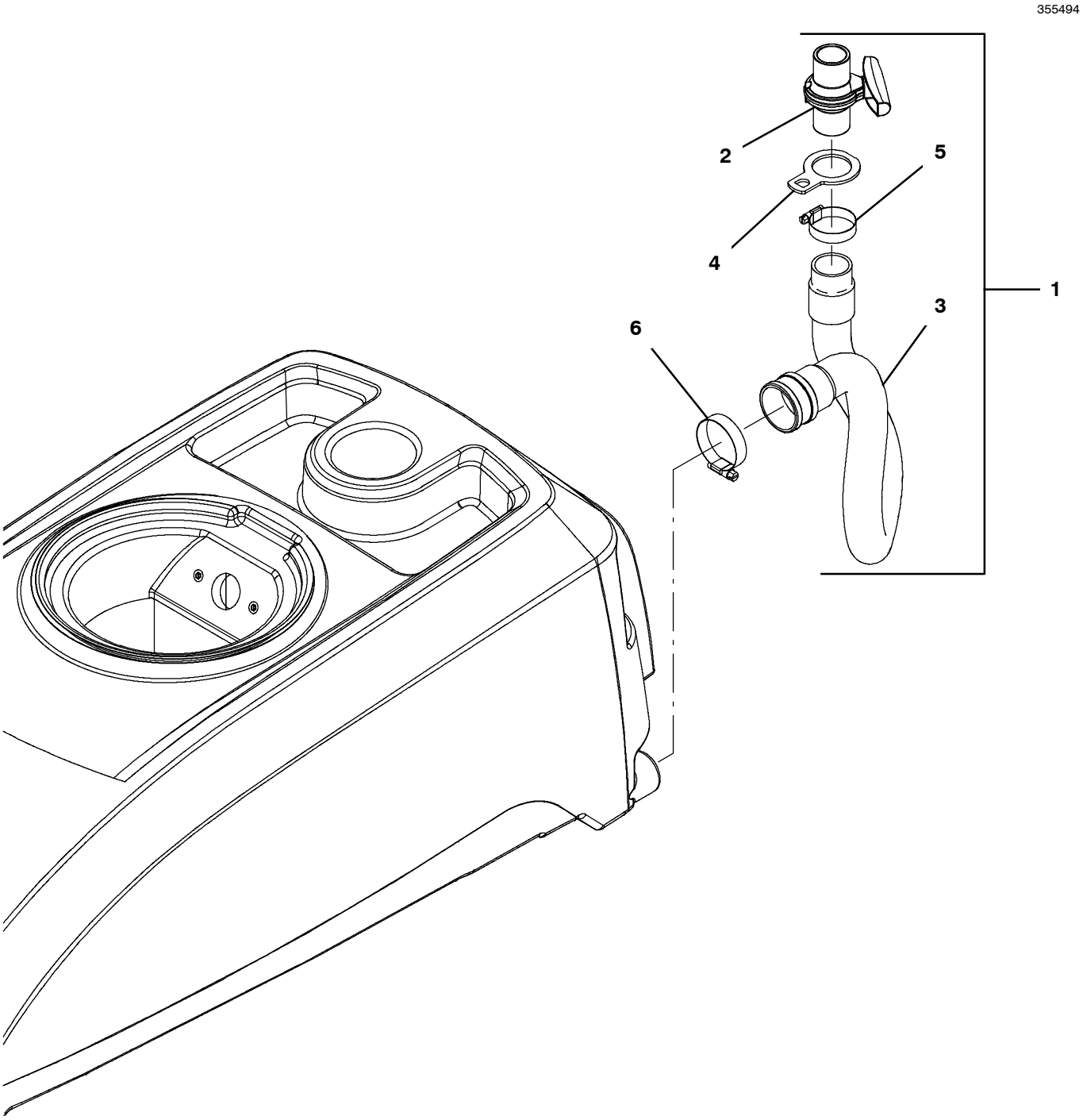

CONTROL VALVE DRAIN HOSE GROUP

	Ref.	Part No.	Serial Number	Description	Qty.
∇	1	9015727	(10000000- 10951745)	Hose Kit, Drain, Pu, W/ Valve, Ci[T500e] (Gray) (No Longer Available - Replaced by 1248221 Black PVC Pinch Cuff Screw Cap Style)	1
▲	2	1051986	(10000000- 10951745)	Valve, Ball, 2way, 1.0id Pvc, W/Handle (No Longer Available - Replaced by 1248221 Black PVC Pinch Cuff Screw Cap Style)	1
▲	3	1228335	(10000000- 10951745)	Hose Assy, W/2cuff,1.5d 022l 2.0/1.5[Pu] (Gray)	1
▲	4	1229567	(10000000- 10951745)	Strap, Hanger	1
▲	5	11531	(10000000- 10951745)	Clamp, Hose, Wormdrive, 1.06- 2.00d, .56w	1
	6	22297	( )	Clamp, Hose, Wormdrive, 1.56- 2.50d, .50w	1

∇ ASSEMBLY

▲ INCLUDED IN ASSEMBLY

ec-H2O SOLUTION GROUP (NEW BARB CONNECTOR STYLE)
(S/N 11089942 -)

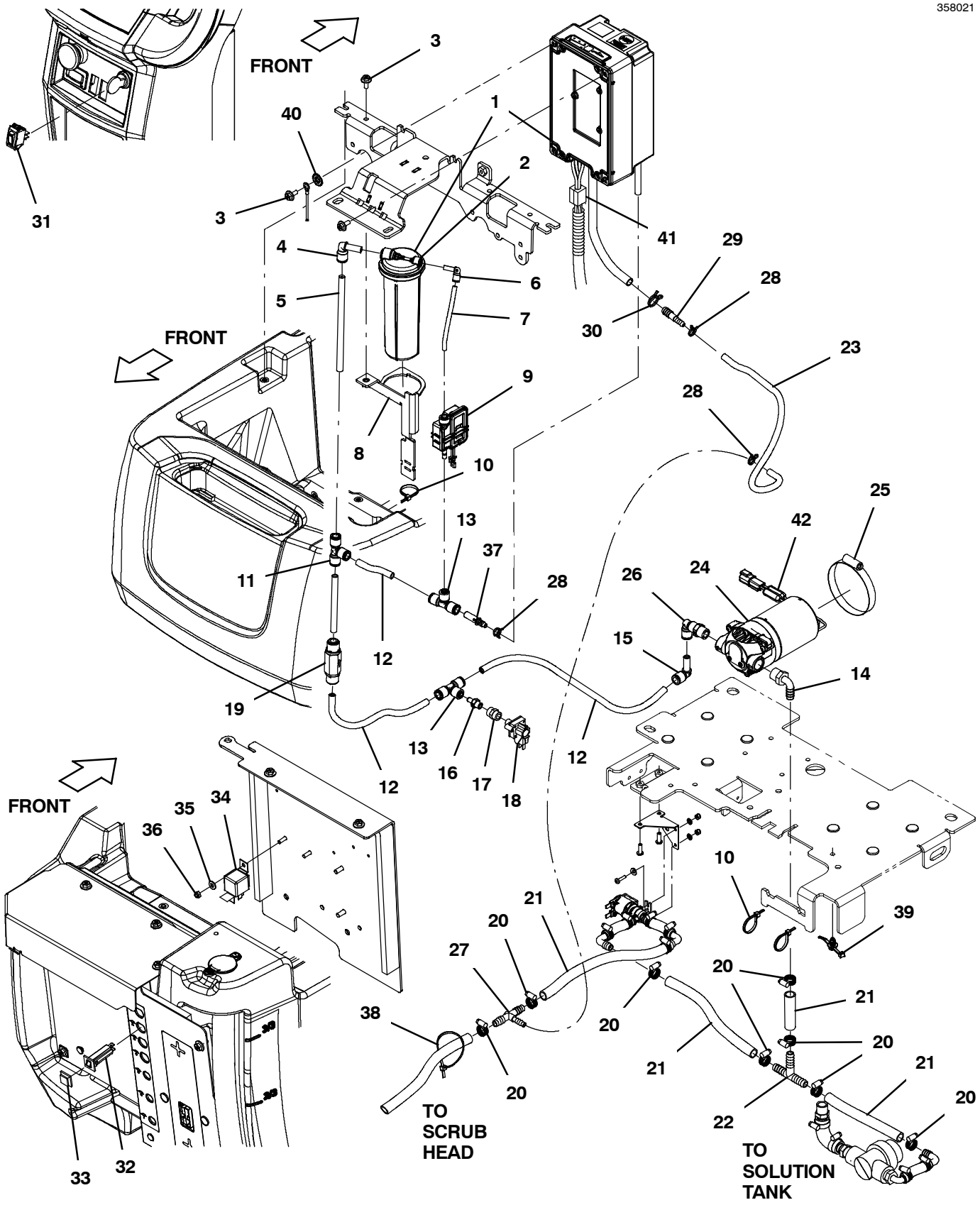

ec-H2O SOLUTION GROUP (NEW BARB CONNECTOR STYLE)
(S/N 11089942 -)

	Ref.	Part No.	Serial Number	Description	Qty.
∇	1	9021553	(SEP2022-)	Module Kit, Replmt [Ec- H2o, B 02] (Includes ec- H2O NanoClean Cartridge)	1
▲	2	9013646	( )	Cartridge, Ec- H2o Nanoclean Wcm, 270ml	1
	3	1034731	( )	Screw, Hex, M6 X 1.00 X 16, Sems, Ss	4
	4	1215186	( )	Fitting, Plstc, E90, Qf06/Qm06	1
	5	9014146	( )	Hose, Afmkt, Pvc, 0.06id .38od, 05ft	1
	6	1214339	( )	Fitting, Plstc, E90, Qfo4/Qm04	1
	7	9014147	( )	Hose, Afmkt, Pvc, 0.06id .25od, 05ft	1
	8	1221926	( )	Bracket Wldt, Mtg, Ec- H20 [T500]	1
	9	1216973	( )	Pump Assy, Dispenser	1
	10	130773	( )	Tie, Cable, Nyl, 11.0l, .14w, 3.0 Max. D	3
	11	1212573	( )	Fitting, Plstc, Tee, Qf06/Qf06/Qf06	1
	12	9014148	( )	Hose, Afmkt, Nat, 0.25id 0.375od, 06ft	1
	13	1212855	( )	Fitting, Plstc, Tee, Qf04/Qf06/Qf06	2
	14	1005630	(11089942-)	Fitting, Plstc, E90, Bm06/Pm06, Nyl	1
	15	1215186	( )	Fitting, Plstc, E90, Qf06/Qm06	1
	16	1216185	( )	Fitting, Plstc, Str, Qm04/Pm02	1
	17	150307	( )	Fitting, Brs, Cplg, Pf02/Pf02	1
	18	1044414	( )	Switch, Press, 15psi, Pm02	1
	19	1215527	( )	Valve, Check, 1.0 Psi Qf06/Qf06	1
	20	43844	(11089942-)	Clamp, Hose, Wormdrive, 0.25- 0.62d, .31w	7
	21	1006416	(11089942-)	Hose, Afmkt, Pvc, Clr, 0.38id, 03ft	1
	22	1247259	(11089942-)	Fitting, Plstc, Tee, Bm06/Bm06/Bm06, Pyp	1
	23	1014985	( )	Hose, Afmkt, Pvc, Clr, 0.25id, 08ft	1
	24	4029767	( )	Pump, Soltn, Ele, 24vdc, 35 Psi	1
	25	43555	( )	Clamp, Hose, Wormdrive, 2.62- 3.50d	1
	26	1212812	( )	Fitting, Plstc, E90, Qf06/Pm06, Swivel	2
	27	50895	(11089942-)	Fitting, Plstc, Tee, Bm04/Bm06/Bm06, Br	1
	28	613735	( )	Clamp, Hose, Wir, .40 - .42, Yel	3
	29	1039557	( )	Fitting, Plstc, Str, Bm04/Bm06	1
	30	607775	( )	Clamp, Hose, Wir, .63 - .66, Blk	1
	31	1044393	(10000000- 11078288)	Switch, Rocker, Spst, Mom	1
	32	1064187	( )	Circuitbreaker, 10.0a, Resetable	1
	33	1064191	( )	Boot, Circuitbreaker	1
	34	1228510	( )	Relay, 24vdc, 80a, Spst No, Plug- In	1
	35	01683	( )	Washer, Flat, 10, Ss	1
	36	09739	( )	Nut, Hex, Lock, M5 X 0.80, Nl, Ss	1
	37	1212857	( )	Fitting, Plstc, Str, Qm06/Bm04	2
	38	130773	( )	Tie, Cable, Nyl, 11.0l, .14w, 3.0 Max. D	1
	39	41140	( )	Washer, Lock, Int- Ext, 0.25	1
	40	1210807	(10865727-)	Wire, Tie [W/.25” Fir Tree Clip]	1
	41	1065665	( )	Inductor, 32.3mml [Ferrite 10- 250mhz] (Canada Only)	1
	42	1227867	( )	Inductor, Ferrite [Split Case,407@100hz]	2

∇ ASSEMBLY

▲ INCLUDED IN ASSEMBLY

ec-H2O SOLUTION GROUP (PUSH QUICK CONNECTOR STYLE)
(S/N 10000000 - 11089941)

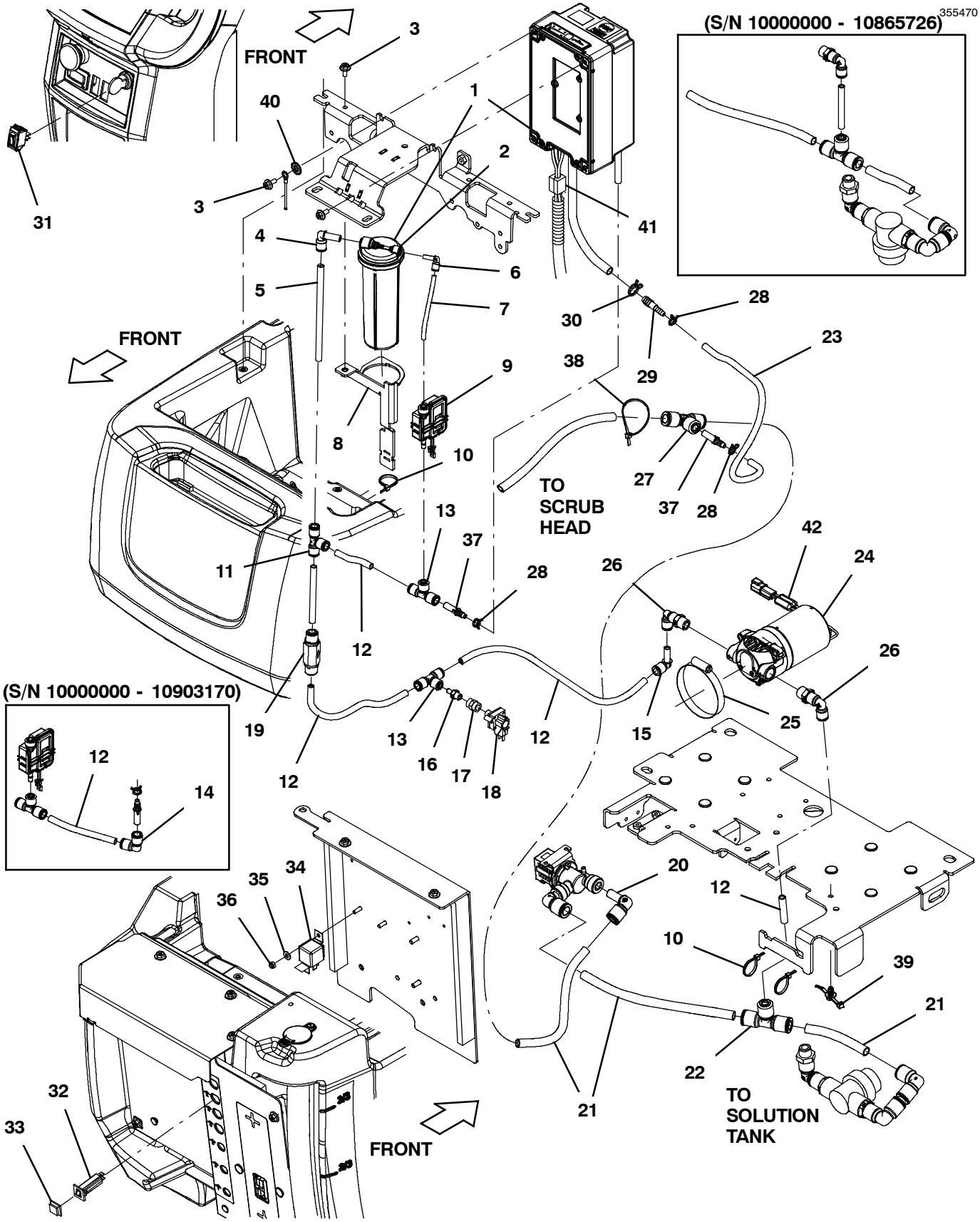

ec-H2O SOLUTION GROUP (PUSH QUICK CONNECTOR STYLE) (S/N 10000000 - 11089941)

	Ref.	Part No.	Serial Number	Description	Qty.
∇	1	9021553	(SEP2022-)	Module Kit, Replmt [Ec- H2o, B 02] (Includes ec- H2O NanoClean Cartridge)	1
∇	1	9020643	(10983853- AUG2022)	Module Kit, Replmt [Ec- H2o, B 02] (Canada Also Requires Ferrite) (Replaced By 9021553)	1
∇	1	9011810	(10000000- 10983852)	Module Kit, Replmt [Ec- H2o, B 02] (See Breakdowns) (Canada Also Requires Ferrite) (Replaced By 9021553)	1
▲	2	9013646	( )	Cartridge, Ec- H2o Nanoclean Wcm, 270ml	1
	3	1034731	( )	Screw, Hex, M6 X 1.00 X 16, Sems, Ss	4
	4	1215186	( )	Fitting, Plstc, E90, Qf06/Qm06	1
	5	9014146	( )	Hose, Afmkt, Pvc, 0.06id .38od, 05ft	1
	6	1214339	( )	Fitting, Plstc, E90, Qfo4/Qm04	1
	7	9014147	( )	Hose, Afmkt, Pvc, 0.06id .25od, 05ft	1
	8	1221926	( )	Bracket Wldt, Mtg, Ec- H20 [T500]	1
	9	1216973	( )	Pump Assy, Dispenser	1
	10	130773	( )	Tie, Cable, Nyl, 11.0l, .14w, 3.0 Max. D	3
	11	1212573	( )	Fitting, Plstc, Tee, Qf06/Qf06/Qf06	1
	12	9014148	( )	Hose, Afmkt, Nat, 0.25id 0.375od, 06ft	1
	13	1212855	( )	Fitting, Plstc, Tee, Qf04/Qf06/Qf06	2
	14	1212856	(10000000- 10903170)	Fitting, Plstc, E90, Qf06/Qf06	1
	15	1215186	( )	Fitting, Plstc, E90, Qf06/Qm06	1
	16	1216185	( )	Fitting, Plstc, Str, Qm04/Pm02	1
	17	150307	( )	Fitting, Brs, Cplg, Pf02/Pf02	1
	18	1044414	( )	Switch, Press, 15psi, Pm02	1
	19	1215527	( )	Valve, Check, 1.0 Psi Qf06/Qf06	1
	20	1212809	(10000000- 11089941)	Fitting, Plstc, E90, Qf08/Qm08	1
	21	9014145	(10000000- 11089941)	Hose, Afmkt, Pe, .375id .50od, 05ft	1
	22	1212875	(10000000- 11089941)	Fitting, Plstc, Tee, Qf06/Qf08/Qf08	1
	23	1014985	( )	Hose, Afmkt, Pvc, Clr, 0.25id, 08ft	1
	24	4029767	( )	Pump, Soltn, Ele, 24vdc, 35 Psi	1
	25	43555	( )	Clamp, Hose, Wormdrive, 2.62- 3.50d	1
	26	1212812	(10000000- 11089941)	Fitting, Plstc, E90, Qf06/Pm06, Swivel	2
	27	1212875	(10000000- 11089941)	Fitting, Plstc, Tee, Qf06/Qf08/Qf08	1
	28	613735	( )	Clamp, Hose, Wir, .40 - .42, Yel	3
	29	1039557	( )	Fitting, Plstc, Str, Bm04/Bm06	1
	30	607775	( )	Clamp, Hose, Wir, .63 - .66, Blk	1
	31	1044393	(10000000- 11078288)	Switch, Rocker, Spst, Mom	1
	32	1064187	( )	Circuitbreaker, 10.0a, Resetable	1
	33	1064191	( )	Boot, Circuitbreaker	1
	34	1228510	( )	Relay, 24vdc, 80a, Spst No, Plug- In	1
	35	01683	( )	Washer, Flat, 10, Ss	1
	36	09739	( )	Nut, Hex, Lock, M5 X 0.80, Nl, Ss	1
	37	1212857	( )	Fitting, Plstc, Str, Qm06/Bm04	2
	38	130773	( )	Tie, Cable, Nyl, 11.0l, .14w, 3.0 Max. D	1
	39	41140	( )	Washer, Lock, Int- Ext, 0.25	1
	40	1210807	(10865727-)	Wire, Tie [W/.25” Fir Tree Clip]	1
	41	1065665	( )	Inductor, 32.3mml [Ferrite 10- 250mhz] (Canada Only)	1
	42	1227867	( )	Inductor, Ferrite [Split Case,407@100hz]	2

∇ ASSEMBLY

▲ INCLUDED IN ASSEMBLY

PARKING BRAKE GROUP (S/N 11064202 -)

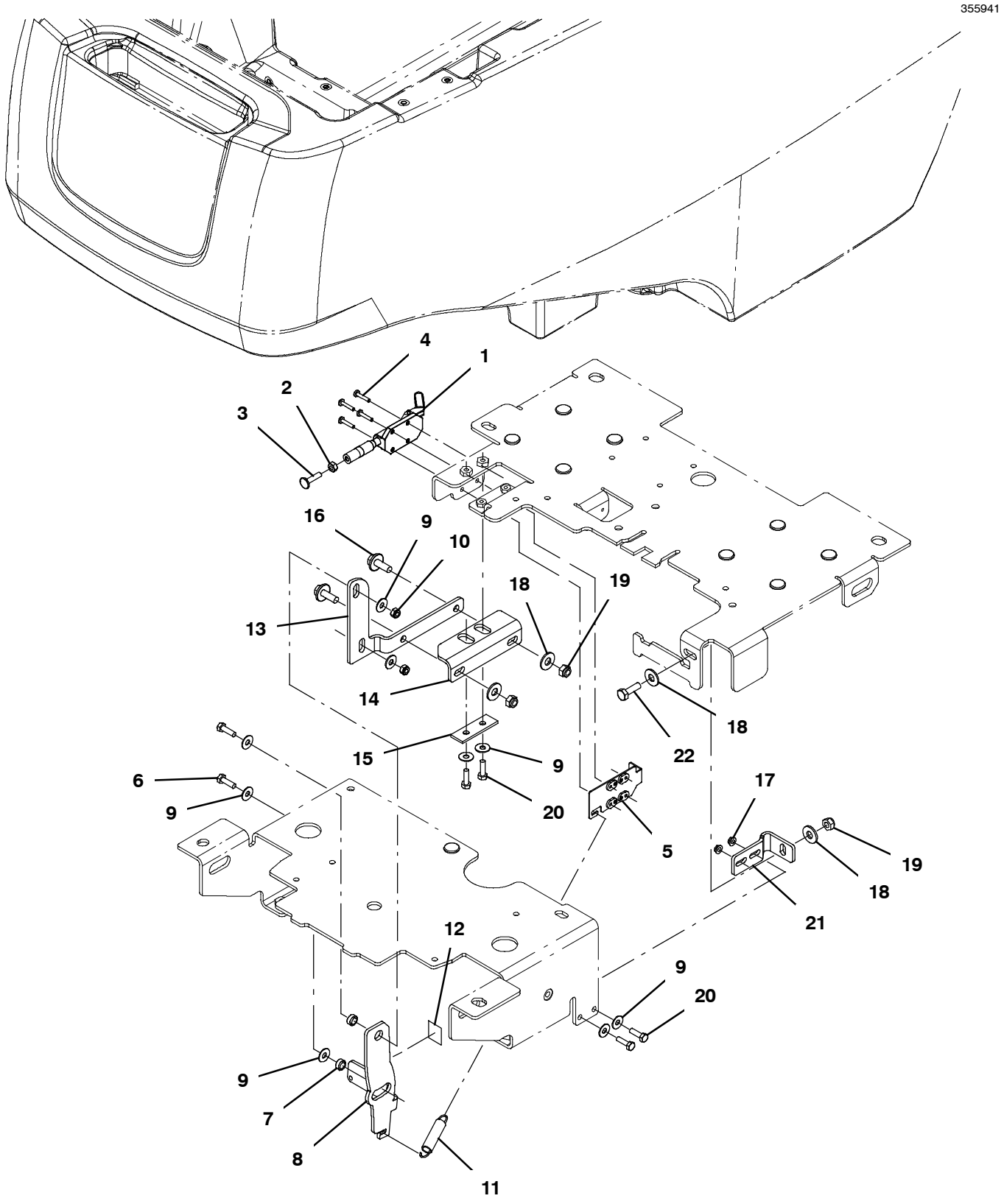

PARKING BRAKE GROUP (S/N 11064202 -)

Ref.	Part No.	Serial Number	Description	Qty.
1	1221694	( )	Clamp, Brake, Parking [T500]	1
2	07785	( )	Nut, Hex, Std, M6 X 1.00, Ss	1
3	1017416	( )	Screw, Weld, M6 X 1.00 X 25, Thru, Ss	1
4	12323	( )	Screw, Pan, Phl, M4 X 0.70 X 20, Ss	4
5	1221695	( )	Plate Wldt, Brake [T500]	1
6	1040803	(11064202-)	Screw, Hex, M6 X 1.00 X 30mm, Ss	2
7	360801	( )	Sleeve, 0.32b 0.50d 0.3l, 2cham, Ss	2
8	1256643	(11064202-)	Shoe, Brake, Parking	1
9	01684	(11064202-)	Washer, Flat, 0.27b 0.69d .05, Ss	9
10	08712	( )	Nut, Hex, Lock, M6 X 1.00, Nl, Ss	2
11	75575	( )	Spring, Extn, 0.50od 0.06wir 02.5l	1
12	1224990	( )	Label, Opertnl, Parking Brake	1
13	1259657	(11064202-)	Bracket, Spanning Vert [T500]	1
14	1259658	(11064202-)	Bracket, Spanning Angle [T500]	1
15	1260051	(11064202-)	Plate, Bracket, Spanning	1
16	1072628	(11064202-)	Screw, Hex, M8 X 1.25 X 25, Ss, Sems	2
17	1040381	(11064202-)	Nut, Hex, Flng, M6 X 1.0, Ss [Serrated]	2
18	01685	(11064202-)	Washer, Flat, 0.38b 0.88d .08, Ss	4
19	08713	(11064202-)	Nut, Hex, Lock, M8 X 1.25, Nl, Ss	3
20	08716	(11064202-)	Screw, Hex, M6 X 1.00 X 20, Ss	4
21	1256017	(11064202-)	Bracket, Spanning [T500]	1
22	09010	(11064202-)	Screw, Hex, M8 X 1.25 X 25, Ss	1

PARKING BRAKE GROUP (S/N 10000000 - 11064201)

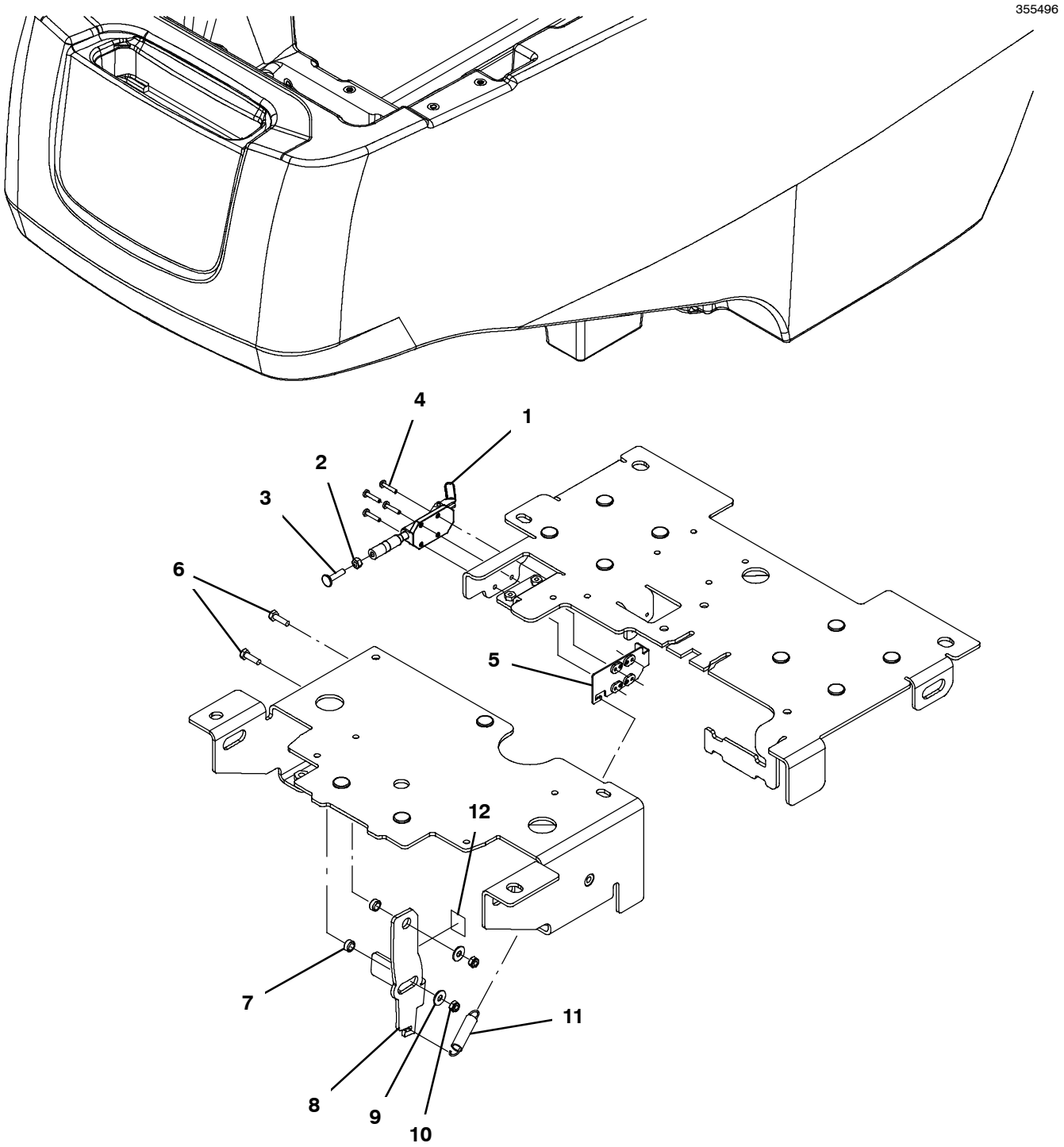

PARKING BRAKE GROUP (S/N 10000000 - 11064201)

Ref.	Part No.	Serial Number	Description	Qty.
1	1221694	( )	Clamp, Brake, Parking [T500]	1
2	07785	( )	Nut, Hex, Std, M6 X 1.00, Ss	1
3	1017416	( )	Screw, Weld, M6 X 1.00 X 25, Thru, Ss	1
4	12323	( )	Screw, Pan, Phl, M4 X 0.70 X 20, Ss	4
5	1221695	( )	Plate Wldt, Brake [T500]	1
6	08716	(10000000- 11064201)	Screw, Hex, M6 X 1.00 X 20, Ss	2
7	360801	( )	Sleeve, 0.32b 0.50d 0.3l, 2cham, Ss	2
8	1221423	(10000000- 11064201)	Shoe, Brake, Parking	1
9	01684	(10000000- 11064201)	Washer, Flat, 0.27b 0.69d .05, Ss	2
10	08712	( )	Nut, Hex, Lock, M6 X 1.00, Nl, Ss	2
11	75575	( )	Spring, Extn, 0.50od 0.06wir 02.5l	1
12	1224990	( )	Label, Opertnl, Parking Brake	1

BRACKET KIT, SOLUTION TANK SUPPORT (S/N 10000000 - 11064201)

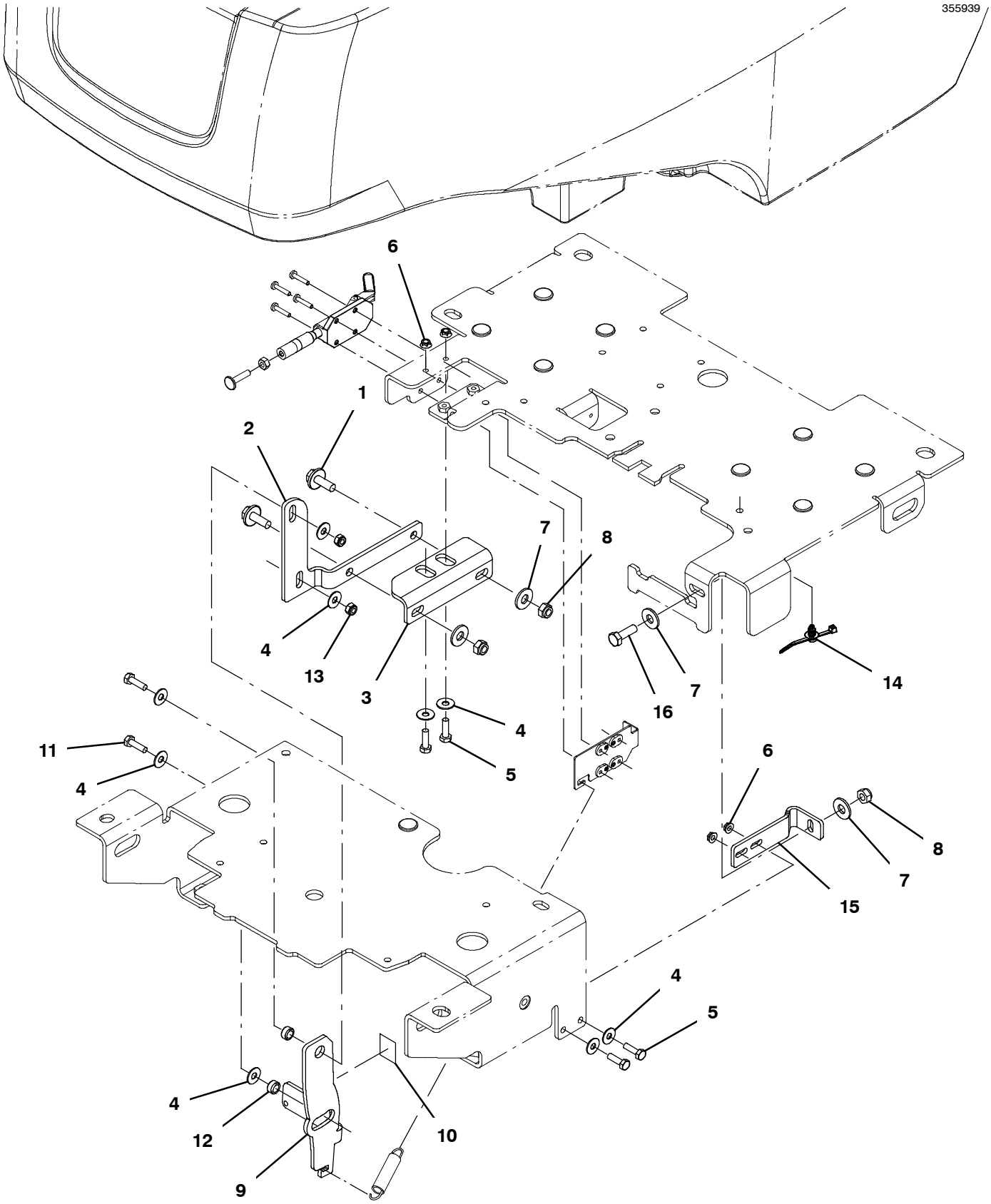

BRACKET KIT, SOLUTION TANK SUPPORT (S/N 10000000 - 11064201)

	Ref.	Part No.	Serial Number	Description	Qty.
∇		9021792	(10000000- 11064201)	Solution Tank Support Kit Afmkt [T500/E]	1
▲	1	1072628	(10000000- 11064201)	Screw, Hex, M8 X 1.25 X 25, Ss, Sems	2
▲	2	1255979	(10000000- 11064201)	Bracket, Spanning [T500]	1
▲	3	1255978	(10000000- 11064201)	Bracket, Spanning [T500]	1
▲	4	01684	(10000000- 11064201)	Washer, Flat, 0.27b 0.69d .05, Ss	9
▲	5	08716	(10000000- 11064201)	Screw, Hex, M6 X 1.00 X 20, Ss	2
▲	6	1040381	(10000000- 11064201)	Nut, Hex, Flng, M6 X 1.0, Ss [Serrated]	4
▲	7	01685	(10000000- 11064201)	Washer, Flat, 0.38b 0.88d .08, Ss	4
▲	8	08713	(10000000- 11064201)	Nut, Hex, Lock, M8 X 1.25, Nl, Ss	3
▲	9	1256643	(10000000- 11064201)	Shoe, Brake, Parking	1
▲	10	1224990	(10000000- 11064201)	Label, Opertnl, Parking Brake	1
▲	11	1040803	(10000000- 11064201)	Screw, Hex, M6 X 1.00 X 30mm, Ss	2
	12	360801	( )	Sleeve, 0.32b 0.50d 0.3l, 2cham, Ss (Existing Part - Not Included In Upgrade Kit 9021792)	2
▲	13	08712	(10000000- 11064201)	Nut, Hex, Lock, M6 X 1.00, Nl, Ss	2
▲	14	1210807	(10000000- 11064201)	Wire, Tie [W/.25” Fir Tree Clip]	1
▲	15	1256017	(10000000- 11064201)	Bracket, Spanning [T500]	1
▲	15	1259835	(10000000- 11064201)	Bracket, Spanning Old Frames [T500]	1
▲	16	09010	(10000000- 11064201)	Screw, Hex, M8 X 1.25 X 25, Ss	1

∇ ASSEMBLY

▲ INCLUDED IN ASSEMBLY

DOCUMENTATION GROUP (ONLINE ONLY)

Ref.	Part No.	Serial Number	Description	Qty.
	4195232	( )	Manual, Parts [T500e, Na]	1
	9015506	( )	Manual, Oprtr [T500e, En, Na/Intl]	1
	9015507	( )	Manual, Oprtr [T500e, Es, Na]	1
	9015508	( )	Manual, Oprtr [T500e, Fr, Na]	1
	9015509	( )	Manual, Oprtr [T500e, Ptbr]	1
	9015510	( )	Instr, Wall Chart [T500e, Na]	1
	9015511	( )	Manual, Service [T500e, En]	1

To view, print, order, download the latest Parts manual, other language Operator manuals, and Use and Care Guides (wall charts), visit:

www.tennantco.com/manual

AUTOMATIC BATTERY WATERING MODULE BREAKDOWN

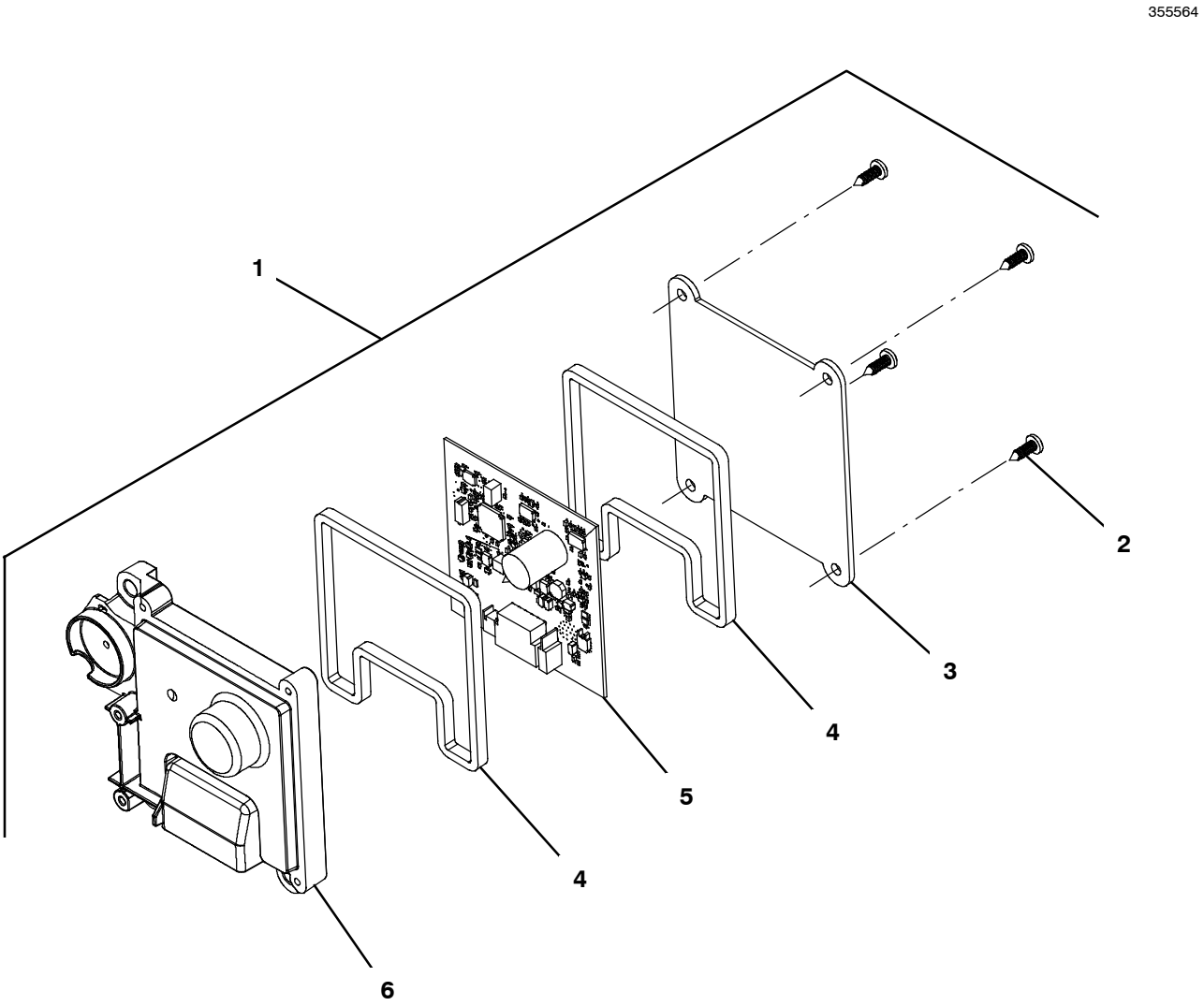

	Ref.	Part No.	Serial Number	Description	Qty.
∇	1	9016770*	(10995399-)	Controller Kit, Battery, 24vdc, Ci [Abw]	1
∇	1	9018008	(10000000- 10995398)	Kit, Module, Abw, Ci (Replaced By 9016770)	1
▲	2	1018155	( )	Screw, Pan, Phl, M5 X 0.80 X 16, Tcut,Ss	4
▲	3	1223055	( )	Panel, Mtg, Fill, Auto, Battery	1
▲	4	1223286	( )	Seal, Cover, Board, Battery Watering	2
▲	5	1220931	( )	Circuitboard Assy [Abw Module]	1
▲	6	1223261	( )	Cover, Circuitboard, Battery Watering	1

*** Requires Tennant *True* service or an authorized Tennant service provider**.

∇ ASSEMBLY

▲ INCLUDED IN ASSEMBLY

ec-H2O NANOCLEAN MODULE BREAKDOWN 9020643, 9021553 (S/N 10983853 -)

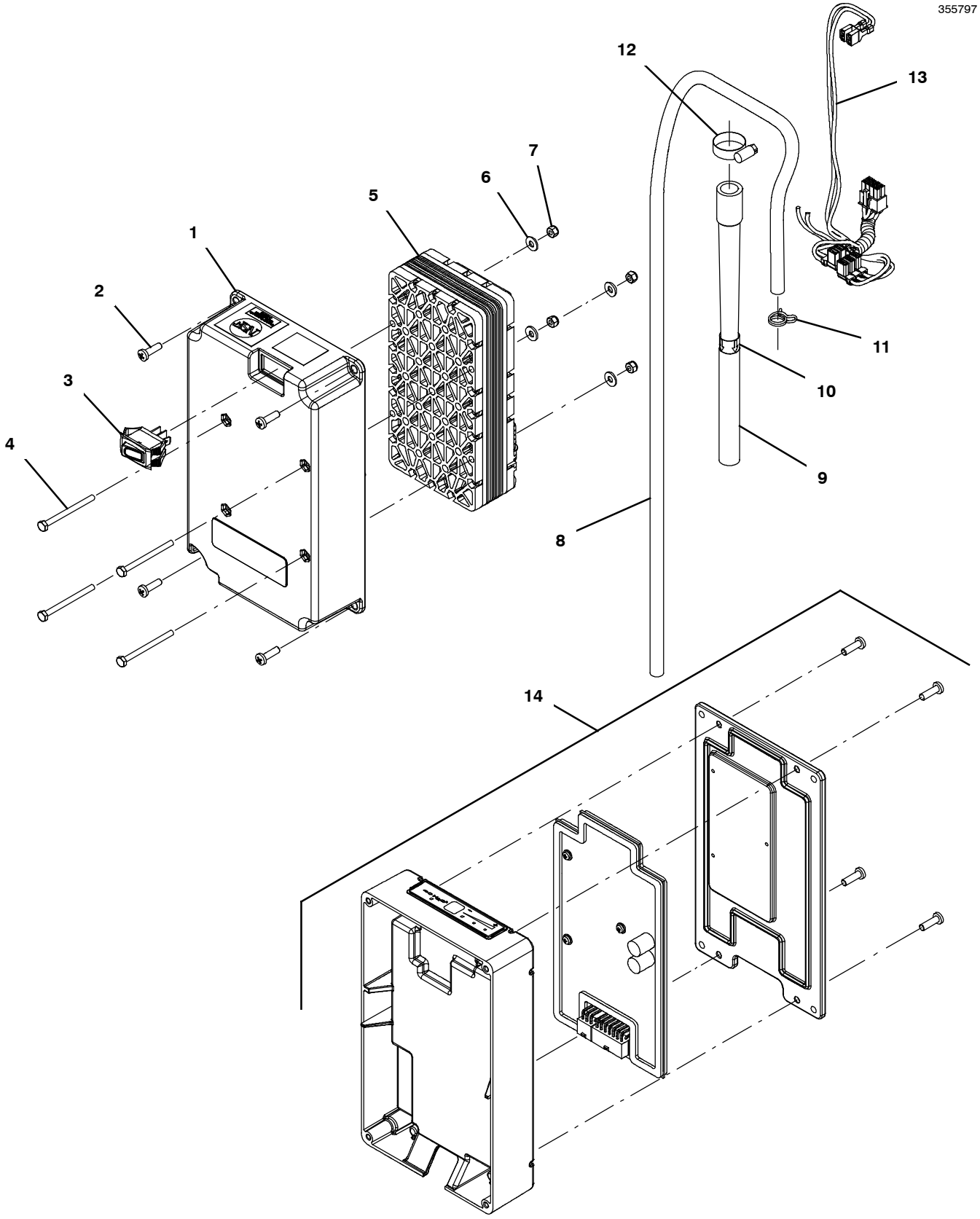

ec- H2O NANOCLEAN MODULE BREAKDOWN 9020643, 9021553 (S/N 10983853 -)

	Ref.	Part No.	Serial Number	Description	Qty.
∇		9021553	(SEP2022-)	Module Kit, Replmt [Ec- H2o, B 02] (Includes ec- H2O NanoClean Cartridge)	1
∇		9020643	(10983853- AUG2022)	Module Kit, Replmt [Ec- H2o, B 02] (Replaced By 9021553) (Includes ec- H2O NanoClean Cartridge)	1
▲∇		9014126	( )	Ec- H2o Nc Kit [Module B, Plumbing]	1
▲▲	1	1208823	( )	Housing, Module, Upper, Ec- H2o	1
▲▲	2	1015506	( )	Screw, Pan, Phl, M5 X 16, Tcut [Plastic]	4
▲▲	3	1044393	( )	Switch, Rocker, Spst, Mom	1
▲▲	4	32509	( )	Screw, Hex, M4 X 0.70 X 50, Ss	4
▲▲	5	1233516	(10983853-)	Electrode, 5 Plate [De Nora Tech]	1
▲▲	6	41579	( )	Washer, Flat, 08, Ss	4
▲▲	7	33932	( )	Nut, Hex, Lock, M4 X 0.70, Nl, Ss	4
▲▲	8	1006415	( )	Hose, Afmkt, Pvc, Clr, 0.25id, 03ft	1
▲▲	9	1208526	( )	Hose, Molded, Bm08/Bm06	1
▲▲	10	1049637	( )	Label, Direction [Ec- H2o]	1
▲▲	11	613735	( )	Clamp, Hose, Wir, .40 - .42, Yel	1
▲▲	12	54333	( )	Clamp, Hose, Wormdrive, 0.31- 0.88d, .31w	1
▲▲	13	1073286	( )	Harness, Ele, Module B2 [Ec- H2o]	1
▲	14	9020642	(10983853-)	Controller Kit, Replmt [Ec- H2o Nc] (Includes ec- H2O NanoClean Cartridge)	1

∇ ASSEMBLY

▲ INCLUDED IN ASSEMBLY

ec-H2O NANOCLEAN MODULE BREAKDOWN 9011810 (S/N 10000000 - 10983852)

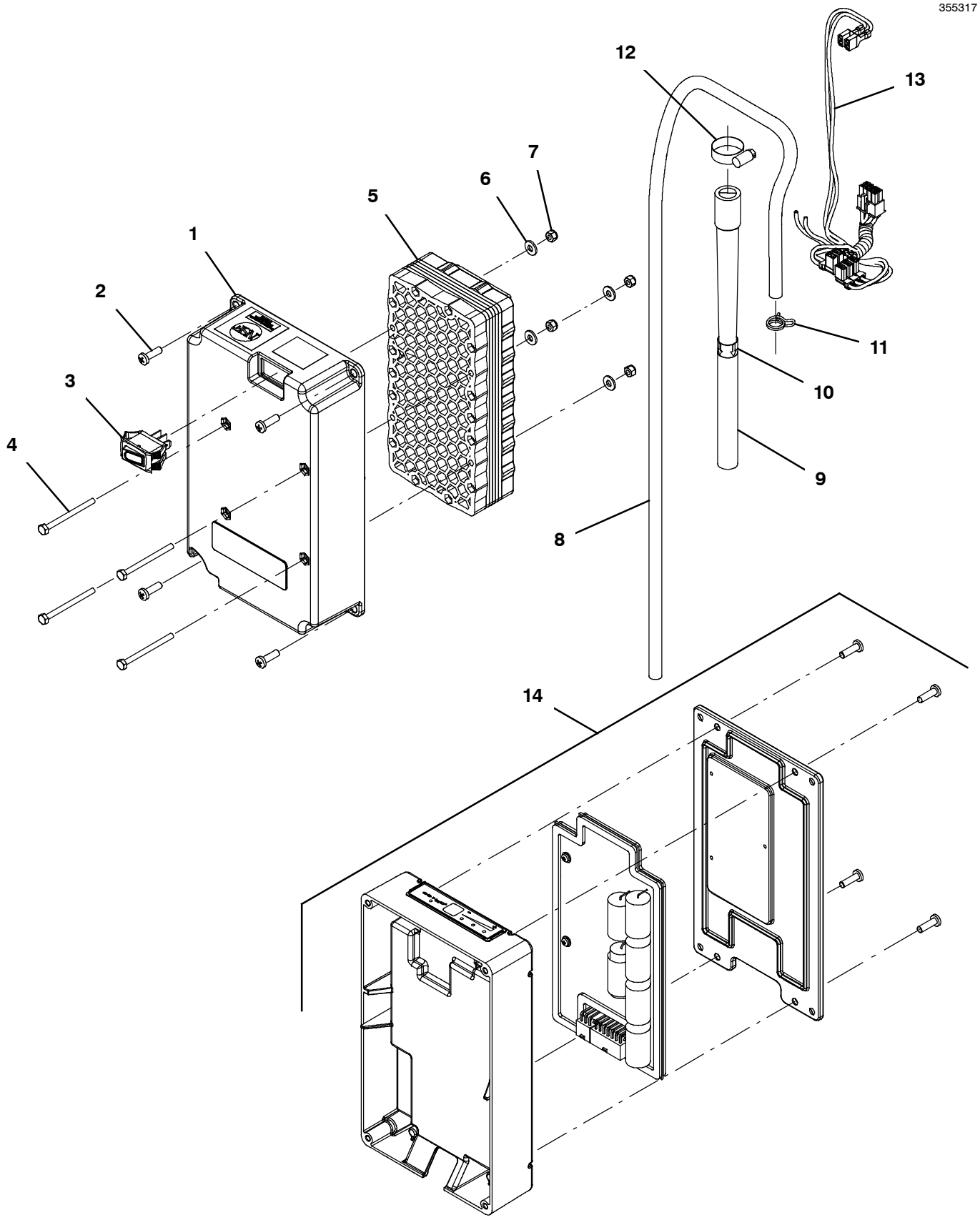

ec-H2O NANOCLEAN MODULE BREAKDOWN 9011810 (S/N 10000000 - 10983852)

	Ref.	Part No.	Serial Number	Description	Qty.
∇		9011810	(10000000-10983852)	Module Kit, Replmt [Ec-H2o, B 02] (Includes ec-H2O NanoClean Cartridge) (Replaced By 9021553)	1
▲∇		9014126	( )	Ec-H2o Nc Kit [Module B, Plumbing]	1
▲▲	1	1208823	( )	Housing, Module, Upper, Ec-H2o	1
▲▲	2	1015506	( )	Screw, Pan, Phl, M5 X 16, Tcut [Plastic]	4
▲▲	3	1044393	( )	Switch, Rocker, Spst, Mom	1
▲▲	4	32509	( )	Screw, Hex, M4 X 0.70 X 50, Ss	4
▲▲	5	1208164	(10000000-10983852)	Electrode, 5 Plate, High Flow (Replaced By 1233516)	1
▲▲	6	41579	( )	Washer, Flat, 08, Ss	4
▲▲	7	33932	( )	Nut, Hex, Lock, M4 X 0.70, Nl, Ss	4
▲▲	8	1006415	( )	Hose, Afmkt, Pvc, Clr, 0.25id, 03ft	1
▲▲	9	1208526	( )	Hose, Molded, Bm08/Bm06	1
▲▲	10	1049637	( )	Label, Direction [Ec-H2o]	1
▲▲	11	613735	( )	Clamp, Hose, Wir, .40 - .42, Yel	1
▲▲	12	54333	( )	Clamp, Hose, Wormdrive, 0.31-0.88d, .31w	1
▲▲	13	1073286	( )	Harness, Ele, Module B2 [Ec-H2o]	1
▲	14	9014127	(10000000-10983852)	Controller Kit, Replmt [Ec-H2o Nc] (Includes ec-H2O NanoClean Cartridge) (Replaced By 9020642)	1

∇ ASSEMBLY

▲ INCLUDED IN ASSEMBLY

ORBITAL HEAD ECCENTRIC DRIVE BREAKDOWN

355477

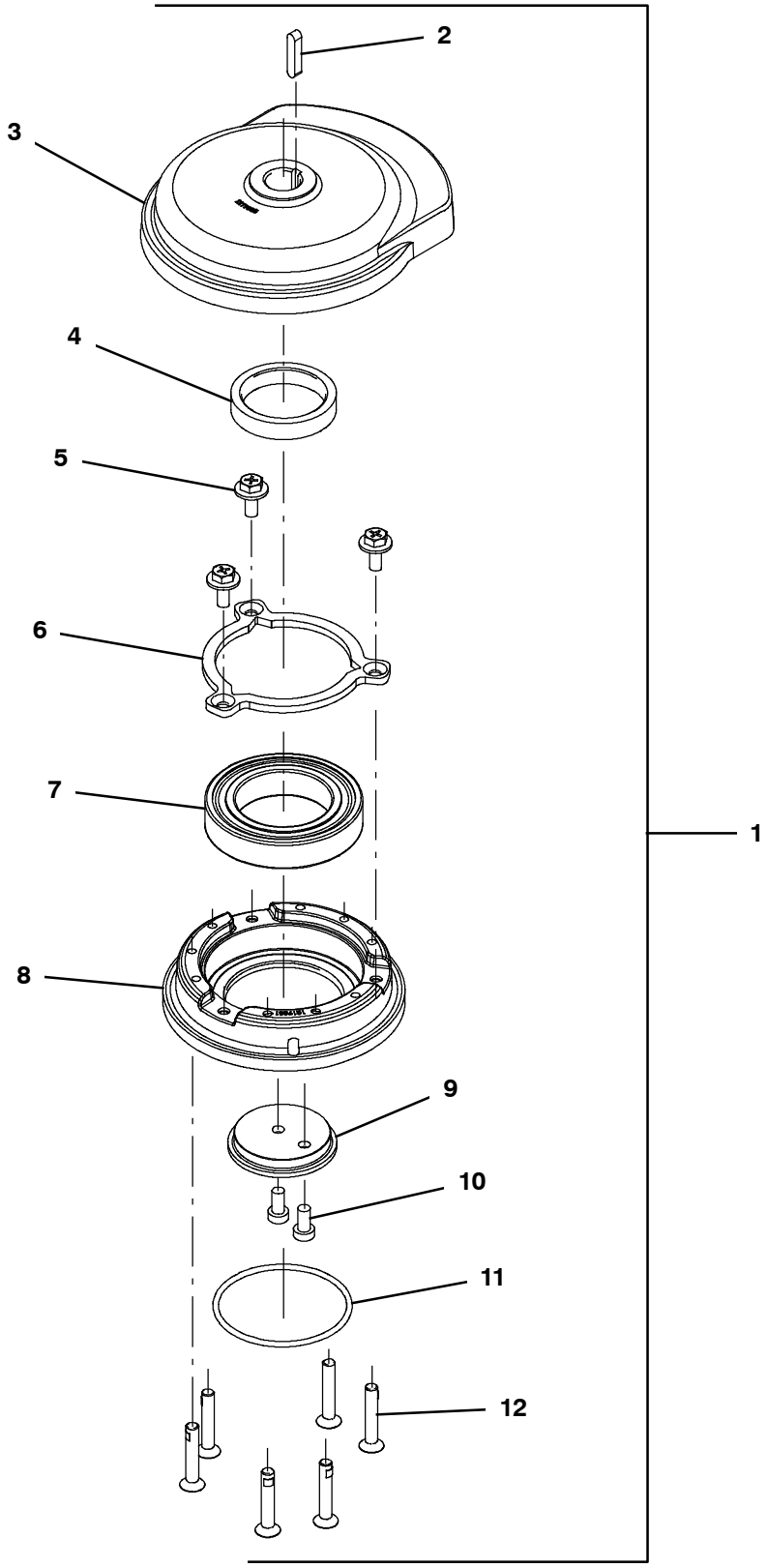

ORBITAL HEAD ECCENTRIC DRIVE BREAKDOWN

	Ref.	Part No.	Serial Number	Description	Qty.
∇	1	9015774	( )	Eccentric Drive Kit, Orbital	1
▲	2	1231238	( )	Key, Sq, 5mm X 5mm X 22mm	1
▲	3	N/A	( )	Balance, Eccentric, Step [Machined]	1
▲	4	N/A	( )	Spacer, Eccentric	1
▲	5	N/A	( )	Screw, Hex, M6 X 1.00 X 16, Sems	3
▲	6	N/A	( )	Plate, Retainer, Brg, Outer	1
▲	7	1220452	( )	Bearing, Ball, 2.17b 3.54d .71w	1
▲	8	N/A	( )	Housing, Bearing, Outer [Machined]	1
▲	9	N/A	( )	Retainer, Bearing, Inner [Qpq]	1
▲	10	N/A	( )	Screw, Soc, M6 X 1.00 X 12, 8.8, Low	2
▲	11	1221394	( )	Seal, Org, .125 X 02.63id	1
▲	12	1212710	( )	Screw, Flt, Soc, M6 X 1.00 X 35, 10.9,Nl	6

∇ ASSEMBLY

▲ INCLUDED IN ASSEMBLY