B10

Rider Burnisher

English EN

Operator Manual

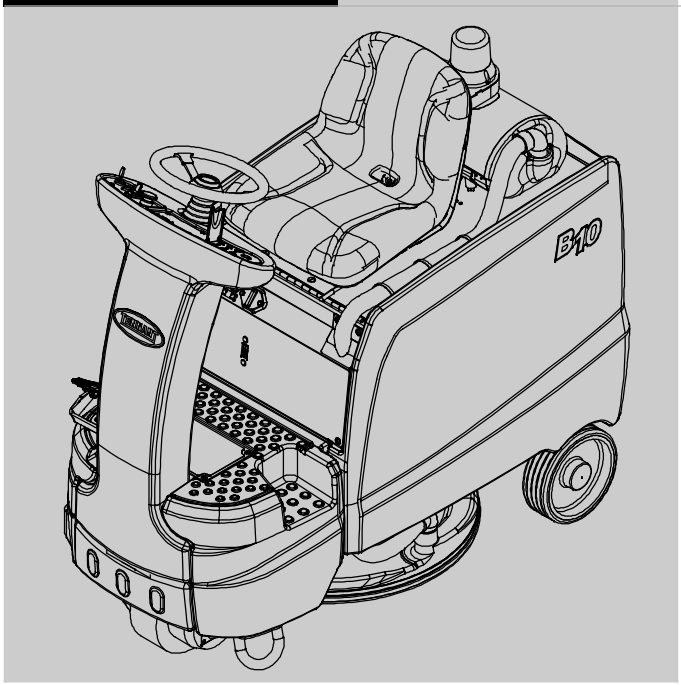

QA Controls® Supervisor Settings

Tennant*True*® Parts

To view, print or download
the latest manual, visit:

www.tennantco.com/manuals

North America / International

9010734
Rev. 00 (01-2013)

www.tennantco.com

INTRODUCTION

This manual is furnished with each new model. It provides necessary operation and maintenance instructions.

Read this manual completely and understand the machine before operating or servicing it.

A complete illustrated Parts Manual is also furnished with each new model. Use the Parts Manual to order replacement parts. To ensure prompt delivery, follow the “HOW TO ORDER PARTS” instructions printed in the Parts Manual.

This machine will provide excellent service. However, the best results will be obtained at minimum costs if:

- The machine is operated with reasonable care.
- The machine is maintained regularly - per the maintenance instructions provided.
- The machine is maintained with manufacturer supplied or equivalent parts.

To view, print or download manuals online visit www.tennantco.com/manuals

PROTECT THE ENVIRONMENT

Please dispose of packaging materials and used machine components such as batteries in a safe environmentally way according to your local waste disposal regulations.

Always remember to recycle.

INTENDED USE

The B10 Rider Burnisher machine is intended for commercial use, for example in hotels, schools, hospitals, factories, shops, offices and rental businesses. It is designed to burnish dry hard floor surfaces in an indoor environment and is not constructed for any other use. Use only recommended burnishing pads intended for machine application**.** Do not use this machine other than described in this Operator Manual.

MACHINE DATA

IMPORTANT: To ensure full warranty protection, fill out the attached MACHINE INSTALLATION / WARRANTY REPORT REPLY CARD and return to Tennant within 30 days of purchase.

Please fill out at time of installation for future reference.

Model No. – _____

Serial No. – _____

Installation Date – _____

Tennant Company
PO Box 1452
Minneapolis, MN 55440
Phone: (800) 553-8033 or (763) 513-2850

www.tennantco.com

QA Contols and 1-STEP are US registered and unregistered trademarks of Tennant Company.

Trojan and HydroLINK are registered trademarks of Trojan Battery Company.

Specifications and parts are subject to change without notice.

Original Instructions. Copyright ©2012 Tennant Company.
All rights reserved. Printed in U.S.A.

TABLE OF CONTENTS

INTRODUCTION 2

INTENDED USE 2

MACHINE DATA 2

OPERATION

IMPORTANT SAFETY INSTRUCTIONS 4

SAFETY LABELS 6

MACHINE COMPONENTS 7

CONTROL PANEL COMPONENTS 8

MACHINE INSTALLATION 9
- UNCRATING MACHINE 9
- BATTERY INSTALLATION 9

HOW THE MACHINE WORKS 10

MACHINE SETUP 11
- INSTALLING BURNISHING PAD 11
- INSTALLING DUST COLLECTION BAG 11

MACHINE OPERATION 12
- PRE-OPERATION 12
- OPERATING THE MACHINE 12
- EMERGENCY SHUT-OFF BUTTON 14
- WHILE OPERATING THE MACHINE 14
- QA CONTROLS™ SUPERVISOR SETTINGS 14
- BATTERY CHARGE LEVEL INDICATOR . . . 15
- HOUR METER 15
- CIRCUIT BREAKERS / FUSE 15
- FAULT INDICATOR LIGHT AND FAULT BEEP CODES 16

CHARGING BATTERIES 17
- BATTERY CHARGER 17
- CHARGING BATTERIES 17
- BATTERY CHARGER SETTINGS 19
- BATTERY CHARGER ERROR CODES 20
- BATTERY CHARGER FUSE 20

MAINTENANCE

MAINTENANCE CHART 21

MACHINE MAINTENANCE 22
- AFTER EVERY USE 22
- AFTER WEEKLY USE 23
- AFTER EVERY 50 HOURS OF USE 23
- AFTER EVERY 200 HOURS OF USE 23

BATTERY MAINTENANCE 24
- SEALED AGM BATTERIES 24
- WET/LEAD-ACID BATTERIES 24
- HYDROLINK® BATTERY WATERING SYSTEM (OPTION) 24

MACHINE JACKING 25

PUSHING, TOWING, AND TRANSPORTING MACHINE 26
- PUSHING OR TOWING THE MACHINE 26
- TRANSPORTING THE MACHINE 26

STORING MACHINE 26

TROUBLESHOOTING 27

SPECIFICATIONS

GENERAL MACHINE DIMENSIONS/CAPACITIES/PERFORMANCE . . 28

MACHINE DIMENSIONS 29

IMPORTANT SAFETY INSTRUCTIONS - SAVE THESE INSTRUCTIONS

The following warning precautions are used throughout this manual as indicated in their description:

WARNING: To warn of hazards or unsafe practices which could result in severe personal injury or death.

FOR SAFETY: To identify actions which must be followed for safe operation of equipment.

The following information signals potentially dangerous conditions to the operator. Know when these conditions can exist. Locate all safety devices on the machine. Report machine damage or faulty operation immediately.

WARNING: To Reduce the Risk of Fire, Explosion, Electric Shock or Injury:

- **Read manual before operating machine.**
- **Do not use or pick up flammable materials.**
- **Do not use near flammable liquids, vapors or combustible dusts.**

  This machine is not equipped with an explosion proof motor. The electric motor will spark upon start up and during operation which could cause a flash fire or explosion if machine is used in an area where flammable vapors/liquids or combustible dusts are present.
- **Batteries emit hydrogen gas. Explosion or fire can result. Keep sparks and open flame away when charging. Open battery compartment for ventilation.**
- **Disconnect battery cables and charger cord before cleaning and servicing machine.**
- **Do not charge batteries with damaged cord. Do not modify plug.**

  If the charger supply cord is damaged or broken, it must be replaced by the manufacturer or its service agent or a similarly qualified person in order to avoid a hazard.

  The use of unapproved battery chargers may damage the battery and potentially cause a fire hazard.
- **Do not use outdoors or on wet surfaces. Store indoors. This machine is for dry use only.**
- **This machine is not suitable for picking up hazardous dust.**

FOR SAFETY:

1. **Do not operate machine:**
   - **Unless trained and authorized.**
   - **Unless operator manual is read and understood.**
   - **Unless mentally and physically capable of following machine instructions.**
   - **Under the influence of alcohol or drugs.**
   - **While using a cell phone or other types of electronic devices.**
   - **If not in proper operating condition.**
   - **In outdoor areas. This machine is for indoor use only.**
   - **With pads or accessories not supplied or approved by Tennant. The use of other pads may impair safety.**
   - **In areas with possible falling objects.**
   - **In areas that are too dark to safely see the controls or operate machine.**
   - **With brake disabled.**
   - **Without dust bag and/or filters in place.**
2. **Before operating machine:**
   - **Make sure all safety devices are in place and operate properly.**
   - **Check brakes and steering for proper operation.**
   - **Inspect charger cord regularly for signs of damage or aging.**
3. **When operating machine:**
   - **Use only as described in this manual.**
   - **Report machine damage or faulty operation immediately.**
   - **Reduce speed when turning.**
   - **Drive slowly on inclines and slippery surfaces.**
   - **Do not operate on inclines that exceed a 7% grade level.**
   - **Keep all parts of body inside operator station while machine is moving.**
   - **Do not carry passengers on machine.**
   - **Keep hands away from spinning pad.**
   - **Use care when reversing machine.**
   - **Never allow children to play on or around machine.**
   - **Keep children and unauthorized persons away from machine.**
   - **Do not allow to be used as a toy.**

4. **Before leaving machine:**
   - **Stop on level surface.**
   - **Turn off machine and remove key.**
5. **When servicing machine:**
   - **Disconnect battery cables and charger plug before working on machine.**
   - **All work must be done with sufficient visibility and lighting.**
   - **All repairs must be performed by a trained service mechanic.**
   - **Use manufacturer supplied or approved replacement parts.**
   - **Do not modify the machine from its original design.**
   - **Avoid moving parts. Do not wear loose clothing or jewelry. Secure long hair when working around machinery.**
   - **Do not disconnect the off-board charger's DC cord from the machine's receptacle when the charger is operating. Arcing may result. If the charger must be interrupted during charging, disconnect the AC power supply cord first.**
   - **Keep work area well ventilated.**
   - **Avoid contact with battery acid.**
   - **Do not power spray or hose off machine.**
   - **Do not push or tow the machine on inclines with the brake disabled.**
   - **Jack machine up at designated locations only. Block machine up with jack stands.**
   - **Block machine tires before jacking machine up.**
   - **Use jack or hoist that will support machine weight.**
   - **Wear appropriate personal protection equipment as needed and where recommended in this manual.**

For Safety: wear protective gloves.

For Safety: wear eye protection.

For Safety: wear protective dust mask.

6. **When loading/unloading machine onto/off truck or trailer:**
   - **Use a ramp that can support the machine weight and operator.**
   - **Do not operate the machine on a ramp incline that exceeds a 19.5% grade level.**
   - **Use a winch if ramp incline exceeds a 19.5% grade level.**
   - **Do not push or tow the machine on inclines with the brake disabled.**
   - **Lower the pad driver after loading.**
   - **Turn machine off.**
   - **Block machine wheels.**
   - **Use tie-down straps to secure machine.**

SAFETY LABELS

The safety labels appear on the machine in the locations indicated. Replace labels if they are missing or become damaged or illegible.

WARNING LABEL – Located on steering column.

FOR SAFETY LABEL – Read manual before operating machine.

– Located on seat panel

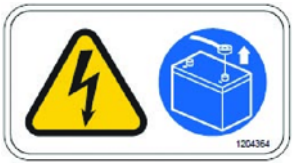

WARNING LABEL – Disconnect battery cables before servicing machine.

– Located behind kick panel on control board cover.

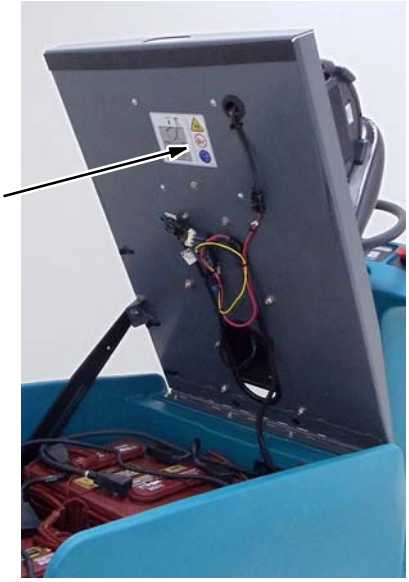

WARNING LABEL – Batteries emit hydrogen gas. Explosion or fire can result. Keep sparks and open flame away when charging.

– Located on backside of seat panel.

MACHINE COMPONENTS

1. Control Panel
2. Steering Wheel
3. Adjustable Operator Seat
4. Hour Meter
5. Circuit Breaker Panel
6. Burnishing Head
7. Dust Control Skirt
8. Propel Pedal
9. Brake Pedal
10. Stabilizer Arm
11. Propel Wheel
12. Off-board Battery Charger Receptacle
13. Flashing Safety Light (Option)
14. Active Dust Collection Vacuum
15. Operator Station Step
16. Vacuum Hose Connector
17. Battery Compartment
18. On-board Battery Charger
19. On-board Battery Charger Cord Storage Hooks
20. Anti-static Strap

n/s. Wall Roller (Option)

CONTROL PANEL COMPONENTS

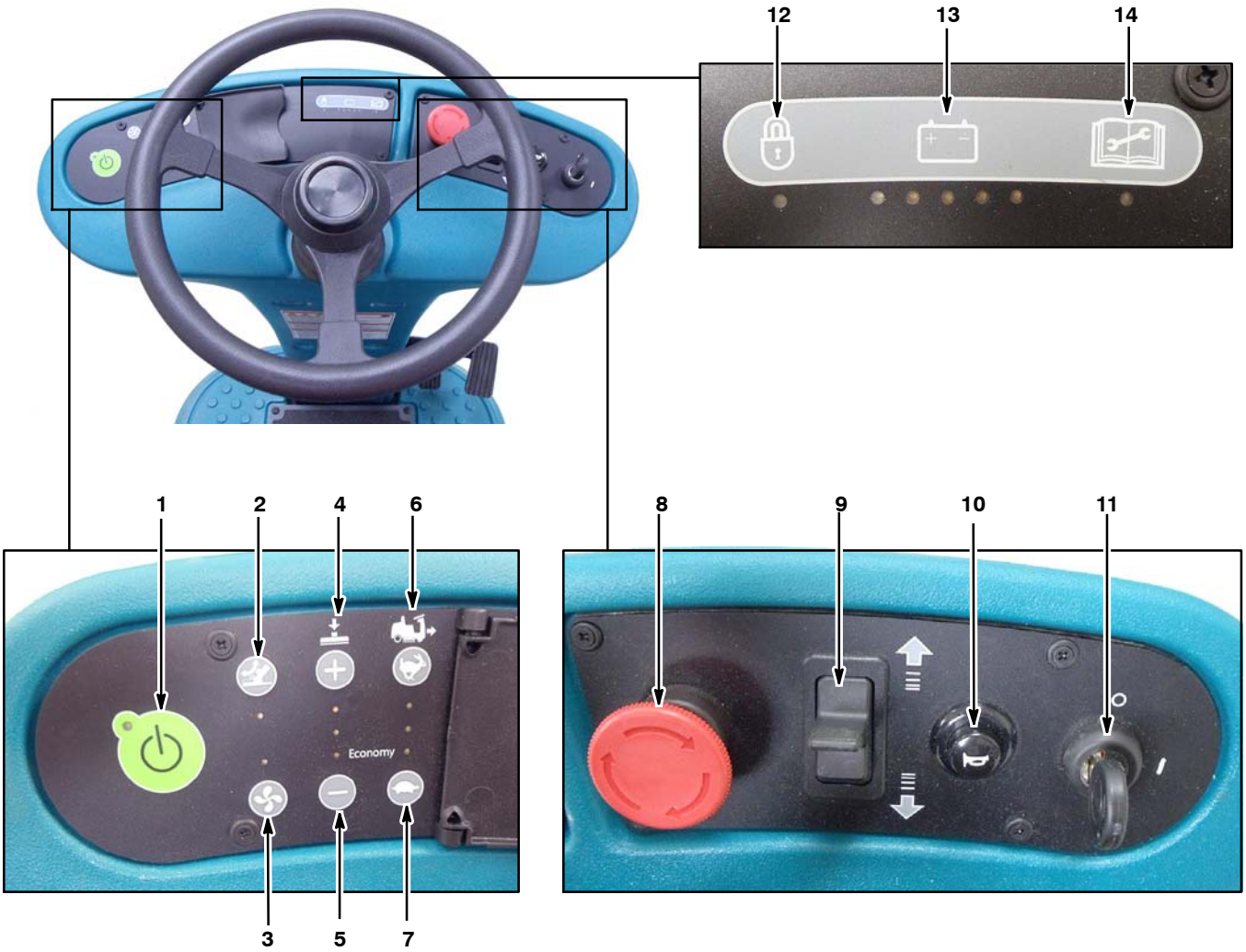

1. 1-STEP™ Burnishing Button
2. Pad Change Button
3. Vacuum Button
4. Pad Pressure Increase Button (+)
5. Pad Pressure Decrease Button (-)
6. Speed Increase Button (+)
7. Speed Decrease Button (-)
8. Emergency Stop Button
9. Forward/Reverse Directional Switch
10. Horn Button
11. Main Power On/Off Key Switch
12. QA Supervisor Controls Indicator (Lock-out)
13. Battery Discharge Level Indicator
14. Machine Fault Indicator

MACHINE INSTALLATION

UNCRATING MACHINE

1. Carefully check machine for signs of damage. Report damages at once to carrier.
2. Check the contents list. Contact distributor or Tennant for missing items.

   Contents:
   - Burnishing Pad (pre-installed)
   - Dust Collection Bag:
     1 paper & 1 cloth bag pre-installed
   - 6 Batteries (pre-installed Option)
   - 5 Battery Cables
   - 12 Battery Post Rubber Boots
   - Battery Tray
   - 6 Foam Battery Spacers
   - 2 Battery Straps
   - Battery Watering System (pre-installed Option)
   - Off-Board Battery Charger (Optional)
   - Operator Training DVD
   - Parts Manual
   - Use & Care Guide Wall Chart
3. To uncrate the machine, remove the shipping hardware that secures the machine to the pallet. Using the supplied ramp carefully back the machine off the pallet. Make sure the burnishing head is in the raised position. If machine shipped without batteries installed see BATTERY INSTALLATION below.

ATTENTION: Do not drive machine off pallet without using the ramp, machine damage may occur.

BATTERY INSTALLATION

If the machine was shipped without batteries pre-installed carefully install batteries as described below.

Contact distributor or Tennant for battery recommendations if machine is not equipped with the following batteries.

Battery Specifications:
Six 6 volt, deep cycle, 435 AH wet lead acid batteries (Standard).
Six 6 volt, deep cycle, 390AH AGM sealed batteries (Optional).

FOR SAFETY: When servicing machine, wear appropriate personal protection equipment as needed. Avoid contact with battery acid.

1. Park the machine on a level surface and remove the key.
2. Lift the operator seat forward until the support arm bracket engages (Figure 1).

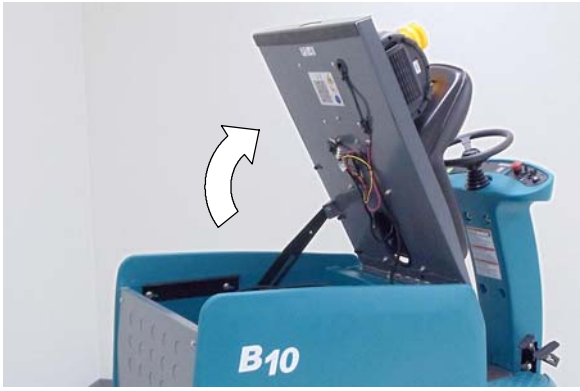

FIG. 1

3. Remove the rear battery access panel from the machine (Figure 2). Philips screwdriver required.

FIG. 2

4. With adequate assistance carefully install the batteries into the battery compartment (Figure 3). Arrange the batteries as shown in Figure 4. Secure the batteries in place with the battery straps provided.

FIG. 3

5. Replace the rear battery access panel after installing batteries.
6. To keep the batteries from moving, position the supplied foam battery spacers around the batteries as shown (Figure 4).

7. Using the supplied battery post boots, connect the cables to the battery posts as shown (Figure 4). Connect the machine's black (–) battery cable last. Use insulated tools when working near batteries.

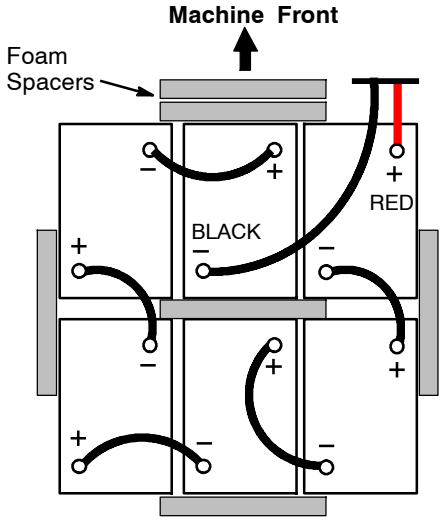

FIG. 4

IMPORTANT: Before charging batteries, make sure the battery charger settings are properly set for your battery type (See CHARGING BATTERIES).

8. Check the machine's battery select mode to ensure that it is properly set for your battery type.

Battery Select Mode:

The machine's battery select mode configures the operation of the battery discharge indicator (BDI) for your battery type. To confirm that the BDI is properly configured follow the instructions as described below:

1. To activate the battery select mode, press and hold the propel increase button (+) while turning the key to the ON position. Release the button when one battery discharge indicator light turns on (Figure 5).

FIG. 5

2. The battery discharge indicator lights indicate the different battery types (Figure 6).

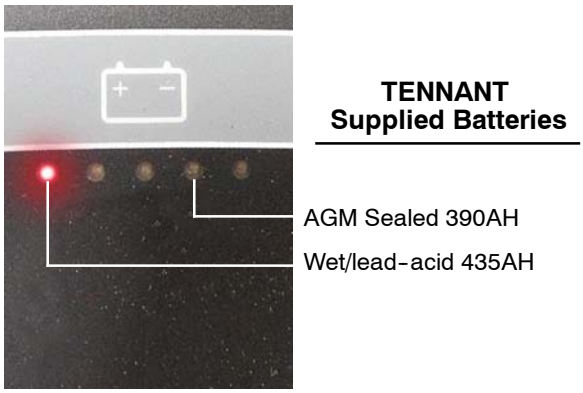

FIG. 6

3. To select the correct battery type, press the propel decrease (–) button to advance to the other battery type selection (Figure 7).

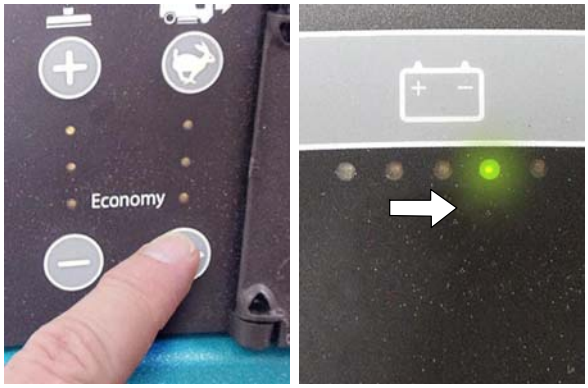

FIG. 7

4. Turn the key to the off position to save selection.

HOW THE MACHINE WORKS

The machine is powered by a 36V battery pack (WET or AGM batteries). The machine comes in two different head sizes - 24in/610mm and 27in/686mm. The machine has a single, front drive wheel and motor. The drive wheel is activated by the propel pedal in the operator's station. A separate brake pedal stops the drive wheel. The burnishing system consists of a motor that drives a disk pad. Pad pressure and machine speed can be adjusted for floor type and floor condition. The active dust control vacuum system consists of an vacuum motor and a high efficiency HEPA rated filter. The burnishing function is controlled by a *1-STEP* burnishing button which automatically activates the preset pad pressure, speed control and active dust control vacuum system.

MACHINE SETUP

INSTALLING BURNISHING PAD

There are many types of pads to choose from depending on floor type, finish and floor condition. Contact an authorized distributor for burnishing pad recommendations.

FOR SAFETY: Do not operate machine with pads or accessories not supplied or approved by Tennant. The use of other pads may impair safety.

1. Park the machine on a level surface.
2. With the key turned on, press the pad change button to raise the burnishing head to the pad change position (Figure 8).

NOTE: When the burnishing head is raised to the pad change position, the propel and pad driver motors are disabled

3. Turn the key to the off position after raising burnishing head.

FIG. 8

4. Remove the pad center-lock from the pad driver by turning it counter-clockwise (Figure 9).

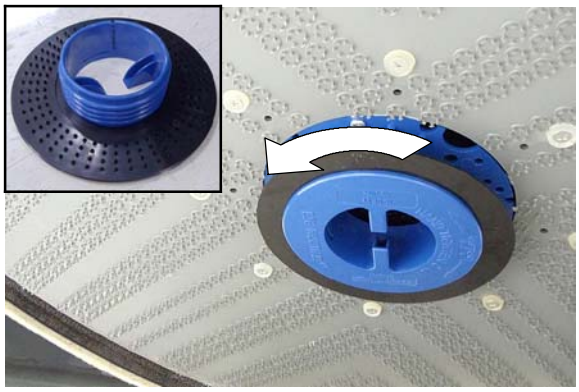

FIG. 9

5. Install the burnishing pad on pad driver using the pad center-lock to help center pad on the pad driver (Figure 10).

   Tighten the pad center-lock securely by turning it clockwise. Do not operate machine without pad center-lock installed.

FIG. 10

INSTALLING DUST COLLECTION BAG

Each new machine is equipped with one pre-installed paper bag. Cloth bag is standard.

Replacement bags:
p/n 9007784 - 1 package/12 paper bags
p/n 9007866 - 16 packages/192 paper bags
p/n 9007785 - Cloth bag.

1. Park the machine on a level surface and remove the key.
2. Release the two cover latches and remove the cover from the vacuum unit (Figure 11).

FIG. 11

3. Place the paper dust collection bag inside the cloth bag as shown (Figure 12).

NOTE: For optimum filtration and dust containment always use paper bag with cloth bag.

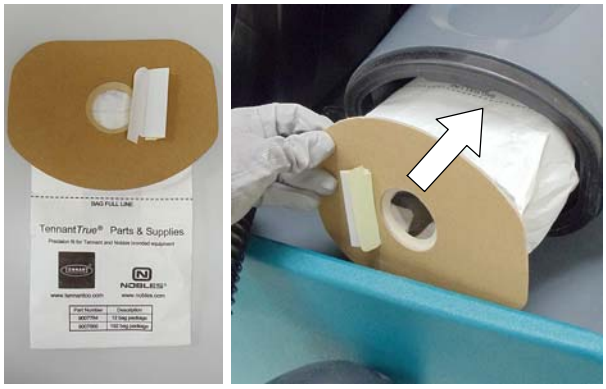

FIG. 12

4. Replace the cover on the vacuum unit.
5. Check the dust collection bag daily for fullness. Do not allow the bag to fill beyond the “BAG FULL LINE” mark (Figure 13).

FOR SAFETY: Do not operate machine without dust bag in place.

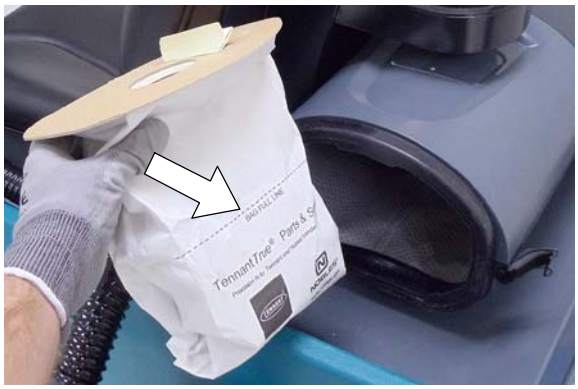

FIG. 13

MACHINE OPERATION

FOR SAFETY: Do not operate machine unless operator manual is read and understood.

PRE-OPERATION

- ❑ Sweep floor and remove any obstructions.
- ❑ Check that the floor surface is dry.
  Do not use machine with spray buffing solution.
- ❑ Check battery charge level indicator.
- ❑ Check condition of burnishing pad.
- ❑ Check dust collection bag for fullness.
- ❑ Check vacuum hose connection at burnishing head.
- ❑ Check the steering, propelling and braking system for proper operation.

OPERATING THE MACHINE

1. Enter the operator station from the left side of the machine using step.
2. Adjust the seat to a comfortable operating position and turn the key to the on (I) position (Figure 14).

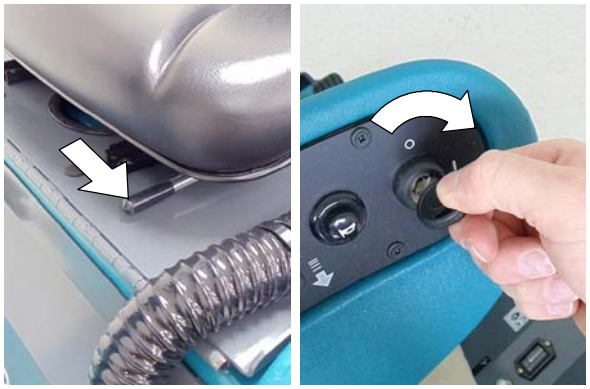

FIG. 14

3. Position the directional lever in the direction you want to move (Figure 15). The reverse alarm system will beep repeatedly when moving backwards.

FIG. 15

4. To transport machine to work area press the propel pedal (Figure 16). The travel speed is controlled by the amount of pressure applied to the pedal.

FIG. 16

5. To begin burnishing, press the *1-STEP* burnishing button (Figure 17). The burnishing head will lower to the floor. The pad will begin to spin when the propel pedal is pressed.

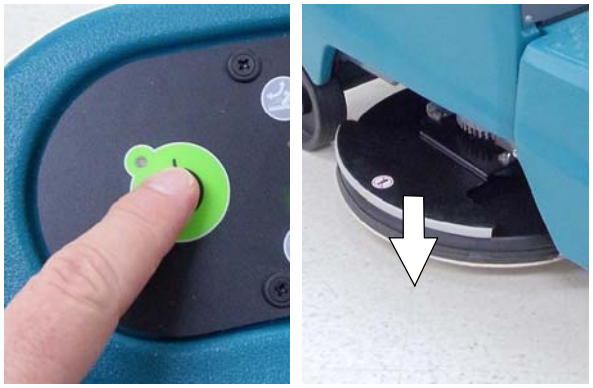

FIG. 17

6. Press the vacuum on/off button to start the active dust control (Figure 18).

FIG. 18

7. To increase (+) or decrease (-) the pad pressure press the pad pressure buttons (Figure 19).

FIG. 19

8. To increase (+) or decrease (-) machine speed press the speed selection buttons (Figure 20).

NOTE: Once the burnishing settings are selected, they will remain as the machine default for next start up.

FIG. 20

9. To stop the machine, release the propel pedal and press the brake pedal (Figure 21). The machine's electromagnetic parking brake system will immediately engage when the propel pedal is released.

FIG. 21

10. To stop burnishing, press the *1-STEP* burnishing button and turn the key to the off position.

11. When transporting the machine from one location to another, turn the *1-STEP* burnishing button to the off position. The burnishing head will raise to the transport position.

NOTE: When transporting machine, the travel speed will slightly increase. The speed selection buttons are disabled when the burnishing head is in the up position.

EMERGENCY SHUT-OFF BUTTON

Push the emergency shut-off button in the event of an emergency (Figure 22). This red button shuts off all power to machine and the electromagnetic braking system will immediately engage. To regain power, turn the button clockwise and restart the key.

Only use this button in the event of an emergency. It is not intended for routine machine shutdown.

FIG. 22

WHILE OPERATING THE MACHINE

1. Drive the machine in a straight path where possible and overlap the burnishing path by a few inches.
2. Reduce the machine speed when making sharp turns.
3. Avoid any floor fixtures or uneven floor transitions that may damage the pad, pad driver or dust skirt.
4. Avoid bumping the machine into posts or walls.
5. Do not operate machine on inclines that exceed a 7% grade or a 19% grade when transporting.
6. For maximum run time, set the pad pressure and speed setting to “economy”.
7. For heavily scuffed floors reduce the speed and increase the pad pressure to ensure optimum burnishing performance.
8. Periodically check the pad condition. If loaded with floor finish or soil buildup turn the pad over or replace pad as needed.
9. Periodically check the dust collection bag for fullness. Replace bag as needed.
10. Observe the battery charge level indicator. *See BATTERY CHARGE LEVEL INDICATOR.*
11. Remove the key when leaving the machine unattended.
12. If the machine detects a fault, the fault indicator light will come on and/or the horn may begin to beep (Figure 23). *See FAULT INDICATOR LIGHT AND FAULT BEEP CODES on page 16 to determine machine fault.*

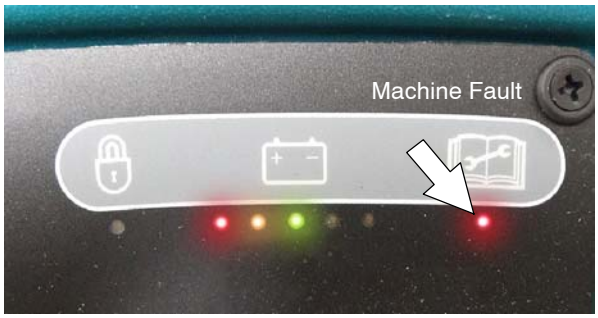

FIG. 23

13. After burnishing, perform the machine maintenance procedures. *See MACHINE MAINTENANCE on page 21.*

QA CONTROLS™ SUPERVISOR SETTINGS

The machine is equipped with *QA Controls supervisor* settings. This feature allows the supervisor to lock in specific burnishing settings (pad pressure, propel speed and vacuum) to ensure the following:

- Lower machine variability for consistent, repeatable cleaning results.
- Maintain quality assurance regardless of operator experience.
- Reduce operator training requirements.

When the QA Controls supervisor settings is activated, the lockout LED will blink if the operator attempts to change the burnishing settings (Figure 24).

Instructions on how to use the QA Controls supervisor settings are packaged with each new machine.

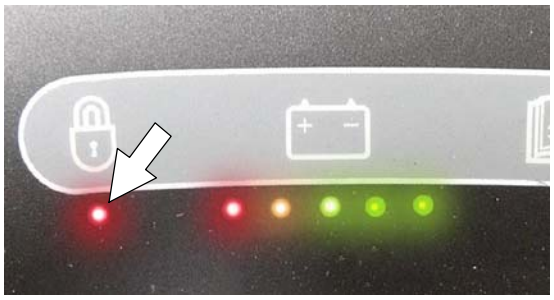

FIG. 24

BATTERY CHARGE LEVEL INDICATOR

The battery charge level indicator displays the charge level of the batteries. When the batteries are fully charged, all five indicator lights will glow (Figure 25). As the batteries discharge, the indicator lights will begin to go out from right to left.

When the discharge level reaches the red light, stop burnishing and recharge the batteries. If the red light begins to blink, the burnishing function will automatically shut off to protect the batteries from total discharge. The machine will still propel when red light is blinking. Drive machine to charging station and recharge batteries.

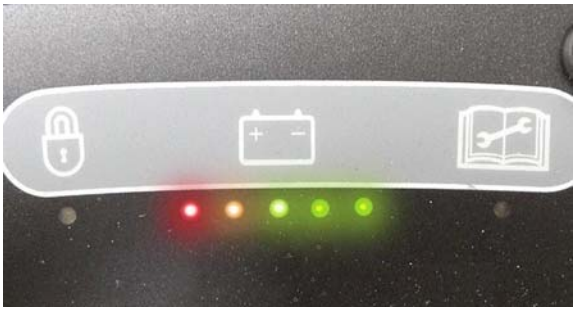

FIG. 25

HOUR METER

The hour meter records the number of hours the machine is in operation. This information is useful for recording service history. The hour meter is located below the front of the operator seat (Figure 26).

FIG. 26

CIRCUIT BREAKERS / FUSE

The machine is equipped with three resettable circuit breakers and one internal fuse to protect the machine from a current overload. If a breaker should trip, determine the cause then reset the circuit breaker. If circuit breaker does not reset or continues to trip contact an authorized service person.

The circuit breakers are located below the front of the operator seat and identified as described below (Figure 27). The fuse is located on the control board. When replacing a blown fuse never substitute a higher amp rated fuse than specified.

FOR SAFETY: When servicing machine, all repairs must be performed by a trained service mechanic.

CIRCUIT BREAKERS:
1 (5A) Control Board
2 (5A) Accessories
3 (150A) Main/Propel/Pad Drive

FUSE:
15A – Actuator Fuse (part no. 63738)

FIG. 27

FAULT INDICATOR LIGHT AND FAULT BEEP CODES

If the machine detects a fault while operating, the fault indicator light will come on and the horn may begin to beep. Use the following fault codes to determine cause of fault.

FAULT CODE	FAULT	SOLUTION
Fault light and down pressure light #1 blink.	Burnishing head movement is obstructed or actuator failure.	Check burnishing head for obstruction. Restart key to reset. Contact service if not obstructed.
Fault light and down pressure lights #1 and #2 blink.	Burnishing head actuator power supply is disconnected.	Contact service.
Fault light and down pressure lights #1 and #3 blink.	Burnishing head actuator failure.	Contact service.
Fault light and down pressure light #2 blink.	Pad motor contactor failure.	Contact service.
Fault light and down pressure light #3 blink.	Pad motor overload.	Change pad. Adjust pad pressure. Check for entangled debris. Restart key to reset
Fault light and down pressure lights #1, #2 and #3 blink.	Pad pressure is set too low.	Increase pad pressure. Change pad. Restart key to reset.
Fault light and vacuum fan light blink.	Vacuum Motor overload.	Change bag. Check vacuum hose for obstruction. Restart key to reset.
Fault light and propel speed light #3 blink.	Propel motor overload.	Avoid steep inclines. Restart key to reset.
All battery lights ripple and horn repeatedly beeps four times.	Propel pedal is pressed when key switch is turned on.	Release propel pedal before turning key on.
Horn repeatedly beeps nine times.	Battery charger plugged into electrical outlet.	Unplug battery charger and restart key to reset.
Horn repeatedly beeps two times.	Propel pedal depressed without operator in seat.	Operator must be seated to operate machine.
Fault light and propel speed light #1 blink and horn repeatedly beeps seven times.	Parking brake system failure	Contact Service.
Fault light and propel speed lights #1 & #3 blink and horn repeatedly beeps five times.	Throttle system failure.	Contact Service.
Fault light blinks and horn repeatedly beeps six times.	Brake system failure	Contact Service.
Pad Change light and Supervisor Control light blinks and horn repeatedly beeps three times.	Burnishing head is raised to pad change position.	Lower burnishing head.
Fault light and propel speed lights #1 & #2 blink	Control Board failure.	Contact Service.
Red battery light blinks	Batteries are discharged.	Recharge Batteries.

CHARGING BATTERIES

The lifetime of the batteries is limited to number of charges the batteries receive. To get the most life from the batteries, recharge them when the battery discharge indicator reaches the red light.

NOTE: To prolong the battery life do not leave batteries discharged for lengthy periods.

The charging instructions in this manual are intended for the S.P.E. on-board or off-board battery charger supplied with your machine. The use of other battery chargers that are not supplied and approved by Tennant is prohibited. If your machine is equipped with a different type of battery charger supplied by Tennant refer to the charger's owners manual for operating instructions. Contact distributor or Tennant if your machine is not equipped with a battery charger.

FOR SAFETY: The use of unapproved battery chargers may damage the battery and potentially cause a fire hazard.

BATTERY CHARGER

The S.P.E. battery charger is designed to charge wet/lead-acid batteries or sealed maintenance free batteries. This can be accomplished by changing the charger settings. Battery damage will result if charger settings are not properly set. *See BATTERY CHARGER SETTINGS on page 19.*

For burnishers equipped with on-board chargers, the charger settings are properly set for the type of battery supplied with your machine.

For models supplied with an off-board battery charger, the charger settings are set to charge wet/lead-acid batteries as the default.

Battery Charger Specifications:

- CHARGER TYPE:
  - For wet (Lead acid) Batteries
  - For Sealed (AGM) Batteries
- OUTPUT VOLTAGE - 36 VOLTS
- OUTPUT CURRENT - 25 AMPS
- AUTOMATIC SHUTOFF CIRCUIT
- FOR DEEP CYCLE BATTERY CHARGING

If the S.P.E. battery charger detects a problem while in use, the charger will display an error code. See *BATTERY CHARGER ERROR CODES*.

CHARGING BATTERIES

1. Transport the machine to a well-ventilated area.

⚠ WARNING: Fire Or Explosion Hazard. Batteries emit hydrogen gas. Explosion or fire can result. Keep sparks and open flame away when charging.

2. Park the machine on a flat, dry surface and turn the key to the off position.
3. Raise the seat panel forward to allow for ventilation when charging (Figure 28). Use the support latch to secure the seat panel upward.

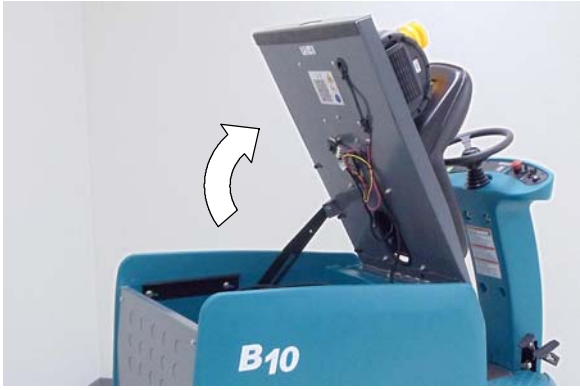

FIG. 28

4. If the machine is equipped with wet/lead acid batteries check the battery electrolyte level before charging (Figure 29). The level should slightly cover the battery plates as shown. Add distilled water if low. DO NOT OVERFILL. The electrolyte will expand and may overflow when charging.

   Check the electrolyte level weekly.

   If the machine is equipped with the HydroLINK battery watering system do not add water before charging batteries *(See HydroLINK Battery Watering System on page 24.)*

FOR SAFETY: When servicing batteries, wear appropriate personal protection equipment as needed. Avoid contact with battery acid.

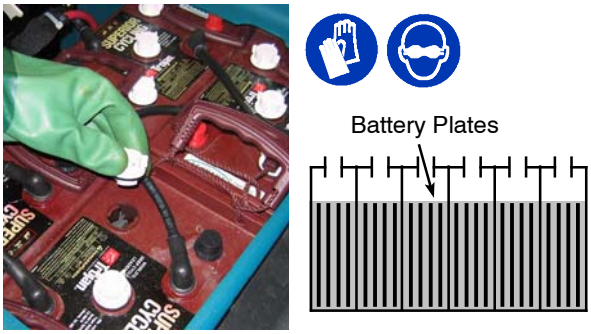

FIG. 29

5. For models equipped with on-board chargers, remove the charger's power cord from the storage hooks and plug power cord into a properly grounded wall outlet (Figure 30).

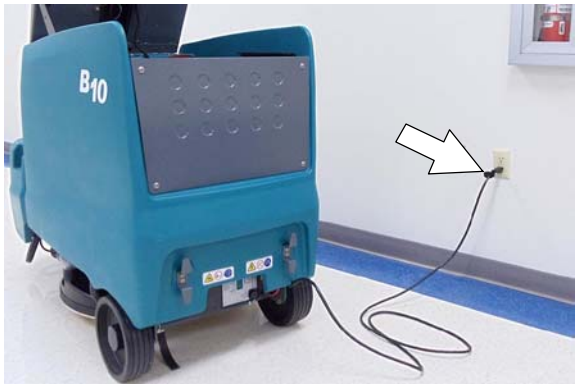

FIG. 30

For models equipped with off-board chargers, first connect the charger's DC cord into the machine's battery charge receptacle then plug the AC power supply cord into a properly grounded wall outlet (Figure 31).

FOR SAFETY: Do not disconnect the off-board charger's DC cord from the machine's receptacle when the charger is operating. Arcing may result. If the charger must be interrupted during charging, disconnect the AC power supply cord first.

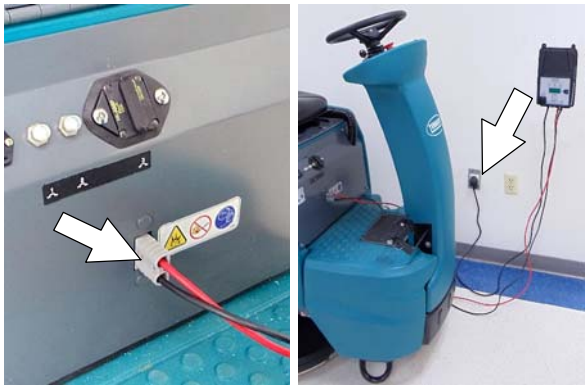

FIG. 31

6. The charger will automatically begin charging the batteries and shut off when fully charged.

   At start up, the charger will display a sequence of codes, three-digits + the following code:

   A = Charging current
   U = Battery Voltage
   h = Charging time
   C = Charging ampere-hours [Ah]
   E = Energy used [Kwh]
   Press the "S" button on the charger's display to review the codes.

NOTE: When the batteries are being charged the machine will not operate.

7. When the charger's green indicator light turns on, the charging cycle has completed (Figure 32). The maximum charging cycle can take up to 18 hours.

FIG. 32

8. After charging batteries unplug the power supply cord and wrap cord around the cord hooks. Secure the power cord with velcro strap retainer (Figure 33).

   For models equipped with an off-board charger, always disconnect the AC power supply cord first before disconnecting charger from machine.

FIG. 33

BATTERY CHARGER SETTINGS

For machine's equipped with an on-board battery charger, the charger settings are preset to charge the batteries supplied with your machine.

For machine's equipped with the S.P.E. off-board battery changer, the charger settings are set to charge wet/lead-acid batteries as the default.

If different batteries are installed, the charger settings must be changed to match the new battery type before charging. Failure to properly set the charger to your battery type will result in battery damage.

To confirm that the S.P.E. battery charger is properly set for your battery type perform the following:

NOTE: If you are unable to identify the battery type contact your distributor or Tennant.

Connect the charger cord into an electrical receptacle.

At start up, the charger will briefly display a sequence of codes. The last code will read one of the following battery types, "Acd" or "GEL" (Figure 34).

Acd = Set for wet/lead acid batteries.

GEL = Set for sealed AGM/GEL maintenance free batteries.

Press the "S" button on the charger's display to review the codes.

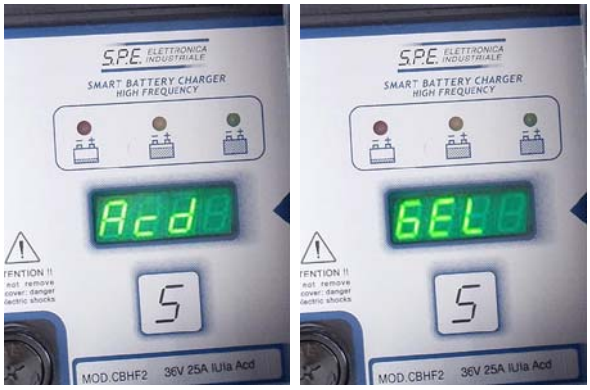

FIG. 34

To Change Battery Charger Settings:

1. Unplug the battery charger power cord.
2. Carefully peel up the charger display label to access the switch settings (Figure 35).

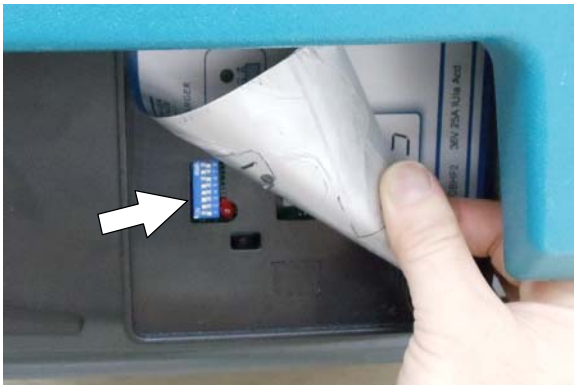

FIG. 35

3. Set the switch positions according to the battery type below (Figure 36).

Wet/lead-acid 435 Ah Battery

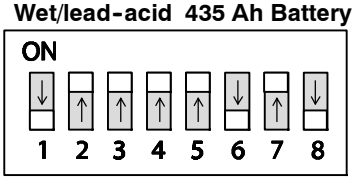

AGM 390 Ah Battery

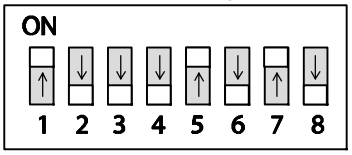

FIG. 36

4. Re-apply the display label.
5. Plug the battery charger cord into an electrical receptacle and confirm that the charger is properly set for your battery type.

NOTE: See Battery Select Mode on page 10 to ensure machine is properly configured for your battery type.

BATTERY CHARGER ERROR CODES

DISPLAY CODE	FAULT	SOLUTION
bat	Loose or damaged battery cable	Check battery cable connections.
	Battery exceeded maximum voltage level.	No action necessary.
E01	Exceeded maximum battery voltage allowed.	No action necessary.
E02	Safety thermostat exceeded maximum internal temperature.	Check if the charger vents are obstructed.
E03	Exceeded maximum time for charging phase leaving the batteries undercharged due to a sulfated or faulty battery.	Repeat the charging cycle and if the error code E03 reappears check battery or replace it.
SCt	Safety timer exceeded maximum charging time. Interrupts charging cycle.	Replace battery.
Srt	Possible internal short circuit.	Contact Service Center.

BATTERY CHARGER FUSE

The S.P.E. battery charger is protected by a 15 Amp fuse. To replace a blown fuse, remove the fuse holder located at the front of the charger using a standard screwdriver (Figure 37).

Required Fuse: 15 Amp (part no. 1206662).
Never substitute a higher Amp rated fuse than specified.

FIG. 37

MAINTENANCE CHART

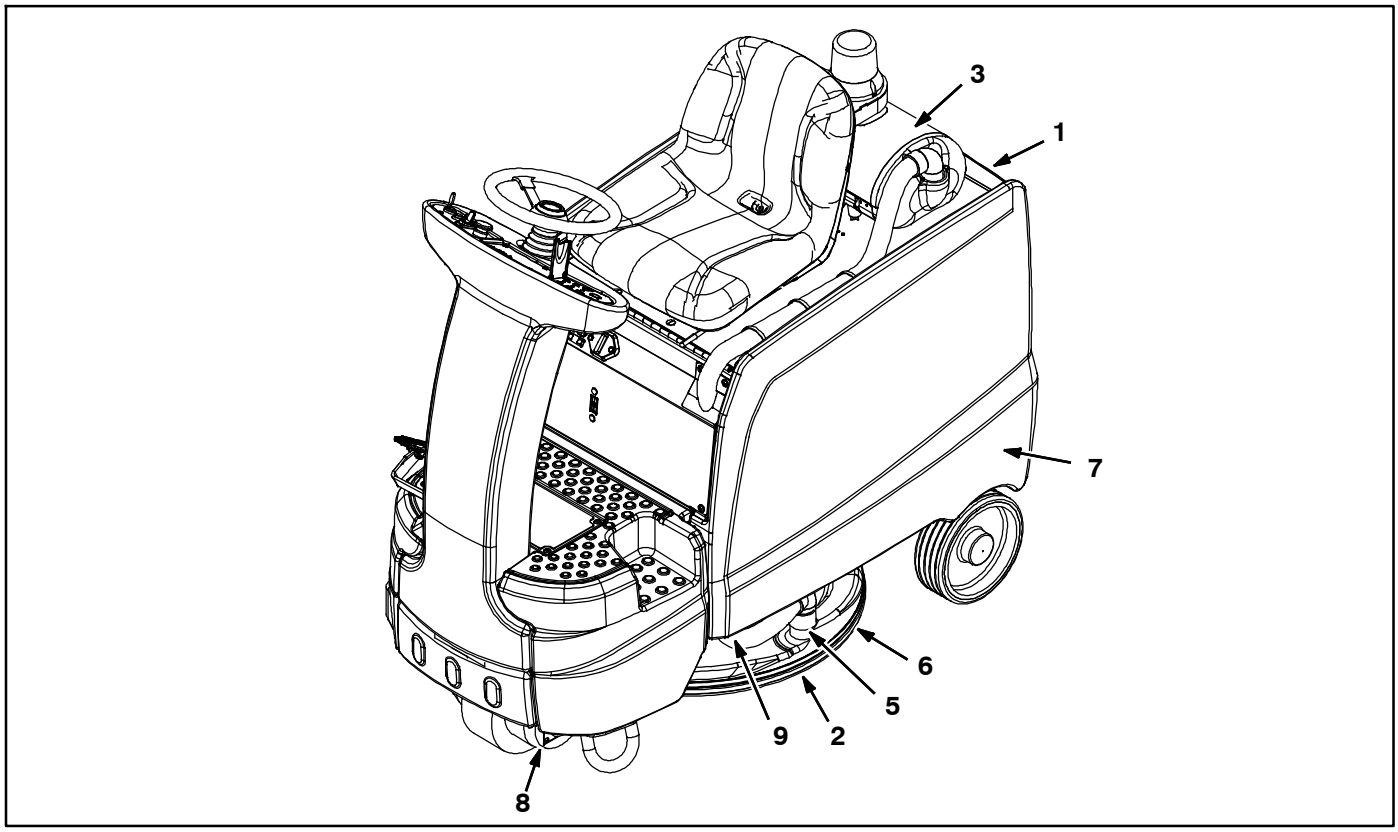

Interval/ Hours	Person Resp.	Key	Description	Procedure
Daily	O	1	Batteries	Charge
	O	2	Burnishing pad	Check, rotate or replace
	O	3	Dust collection bag	Check, replace
		5	Vacuum Hose	Check, clean
Weekly	O	1	Battery electrolyte level	Check
50 Hours	O	6	Burnishing head dust skirt	Check for wear and damage
	O	6	Burnishing Head	Clean with air pressure hose
	O	7	Machine	Clean with damp cloth
200 Hours	O	1	Batteries, terminals and cables	Check, clean
	O	3	Vacuum HEPA filter	Check, clean, replace
	O	3	Vacuum exhaust filter	Check, clean, replace
	S	7	Steering chain and pivot points	Lubricate with grease
750 Hours	S	8	Propel Motor	Replace carbon brushes
1000 Hours	S	9	Pad Motor	Replace carbon brushes

O = Operator S = Trained Service Mechanic

MACHINE MAINTENANCE

To keep the machine in good working condition, simply perform the following maintenance procedures.

FOR SAFETY: Before leaving or servicing machine, stop on a level surface and turn off machine.

WARNING: When servicing machine, wear appropriate personal protection equipment as needed. All repairs must be performed by a trained service mechanic.

AFTER EVERY USE

1. Rotate the burnishing pad or change to a new pad (Figure 38).

FIG. 38

2. Check the dust collection bag for fullness. Replace bag when full (Figure 39). *See INSTALLING DUST COLLECTION BAG.*

FIG. 39

3. Remove the cloth filter bag from the active dust control unit and clean (Figure 40). Turn the bag inside out and tap off any dust buildup. Do not wash bag. Replace bag if worn or damaged.

NOTE: For optimum filtration and dust containment always use paper bag with cloth bag.

FIG. 40

4. Check vacuum hose for clogging. Clean hose as necessary (Figure 41).

FIG. 41

5. Charge batteries (Figure 42). *See CHARGING BATTERIES.*

ON-BOARD CHARGER OFF-BOARD CHARGER

FIG. 42

AFTER WEEKLY USE

Check the electrolyte level in all batteries (Figure 43). See BATTERY MAINTENANCE.

FIG. 43

AFTER EVERY 50 HOURS OF USE

1. Check the dust skirt for wear or damage (Figure 44). Replace if necessary.

FIG. 44

2. Clean the burnishing head, pad motor and propel motor of any dust buildup using an air pressure hose (Figure 45). Maximum air pressure 100 psi / 690 kPa.

⚠ WARNING: When servicing machine, wear appropriate personal protection equipment as needed.

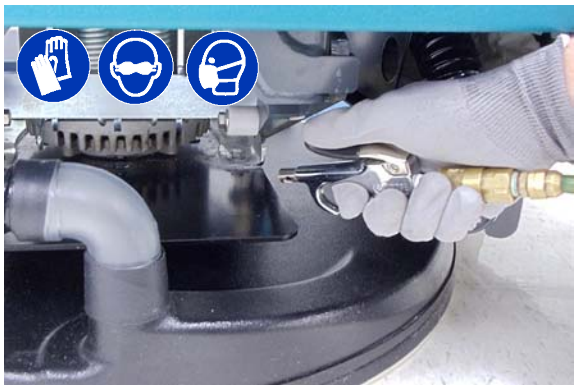

FIG. 45

3. Clean the outside surface of the machine with an all purpose cleaner and damp cloth (Figure 46).

FIG. 46

AFTER EVERY 200 HOURS OF USE

1. Clean batteries and check for loose battery cable connections.
2. Replace the HEPA filter in the active dust control vacuum (Figure 47). The HEPA filter is located below the cloth filter bag.

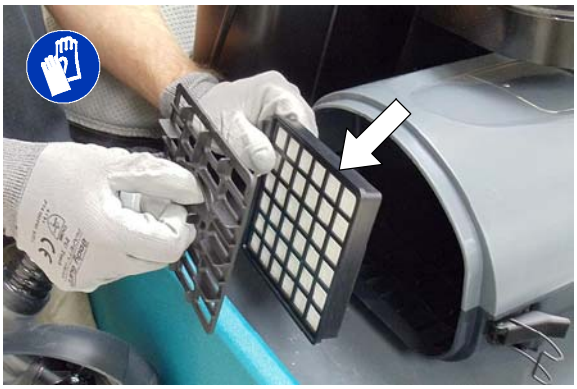

FIG. 47

3. Replace the exhaust filter in the active dust control vacuum (Figure 48). Remove the filter holder at bottom of vacuum to access exhaust filter.

FIG. 48

BATTERY MAINTENANCE

The lifetime of the batteries is limited to the number of charges the batteries receive. To get the most life from the batteries, only recharge the batteries when the battery discharge indicator begins to blink. It's also important to maintain the proper electrolyte levels during the life of the battery.

Your machine is equipped with either wet/lead-acid or sealed AGM batteries supplied by Tennant.

FOR SAFETY: When servicing batteries, wear protective gloves and eye protection. Avoid contact with battery acid.

SEALED AGM BATTERIES

The sealed AGM batteries are maintenance free and do not require any attention other than routine charging as described in this manual.

WET/LEAD-ACID BATTERIES

The wet/lead-acid batteries require routine maintenance as described below.

NOTE: If your machine is equipped with the HydroLINK battery watering system option, see HYDROLINK BATTERY WATER SYTEM.

Check the battery electrolyte level weekly. The electrolyte level should be slightly above the battery plates as shown (Figure 49). Add distilled water if low. DO NOT OVERFILL. The electrolyte will expand and may overflow when charging.

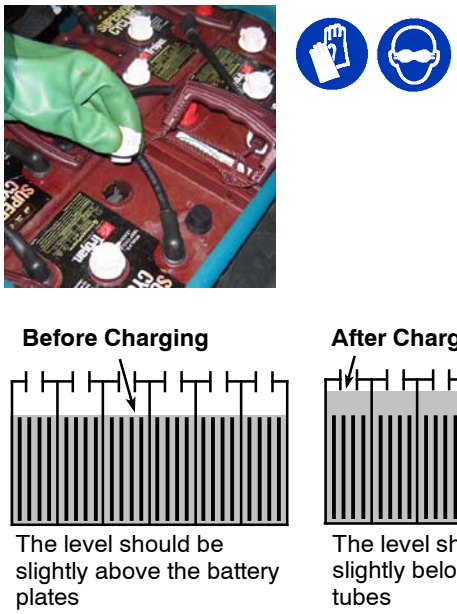

FIG. 49

After every 200 hours of use, check for loose battery connections and clean the surface of the batteries, including terminals and cable clamps to prevent battery corrosion. Use a scrub brush with a strong mixture of baking soda and water (Figure 50). Do not remove battery caps when cleaning batteries.

FIG. 50

HYDROLINK® BATTERY WATERING SYSTEM (OPTION)

The following instructions are for models equipped with the HydroLINK battery watering system option.

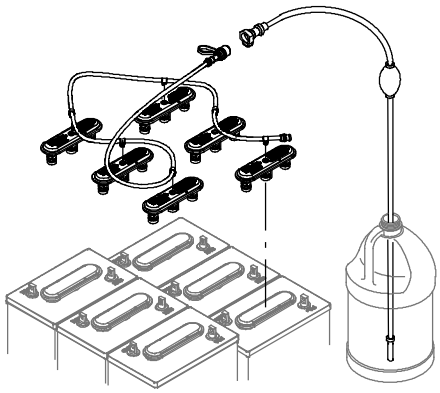

The optional HydroLINK battery watering system provides a safe and easy way to maintain the proper electrolyte levels in your batteries.

This battery watering system is also offered as an aftermarket kit (p/n 9010301). It is designed exclusively for Trojan® wet/lead-acid batteries.

Before using the battery watering system check hoses and connections for damage or wear.

1. Fully charge batteries prior to using the battery watering system. Do not add water to batteries before charging, the electrolyte level will expand and may overflow when charging.

2. After charging batteries, check the battery electrolyte level indicators located on the battery covers (Figure 51). If the level indicator is white add water as described in the following instructions. If the level indicators are black the electrolyte is at the correct level, no water is required.

FIG. 51

3. Locate the battery fill hose coupler inside the battery compartment. Remove the dust cap and connect the hand pump hose (Figure 52).

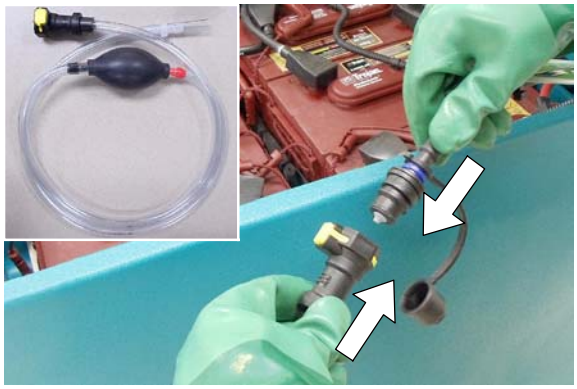

FIG. 52

4. Submerge the other end of the hand pump hose into a bottle of distilled water (Figure 53).

FIG. 53

5. Squeeze the bulb on the hand pump hose until firm (Figure 52). The level indicators will turn black when full.

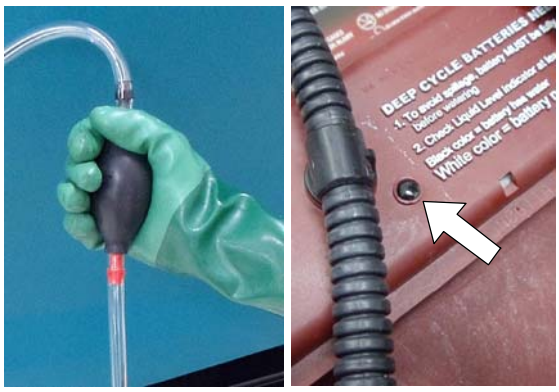

FIG. 54

6. After adding water, replace the dust cap on the battery fill hose and store the hand pump hose inside the machine's battery compartment for future use.

MACHINE JACKING

Use the designated jacking locations for jacking up the machine (Figure 55). Use a jack capable of supporting the weight of the machine. Position the machine on a flat, level surface and block the tires before jacking.

FOR SAFETY: When servicing machine, jack machine up at designated locations only. Use jack or hoist that will support machine weight. Block machine up with jack stands.

FIG. 55

PUSHING, TOWING, AND TRANSPORTING MACHINE

PUSHING OR TOWING THE MACHINE

The machine can be pushed or towed if the machine becomes disabled. Before attempting to push or tow the machine, the electromagnetic brake system must be disabled. To disengage the brake, insert a small standard screwdriver between the electronic brake lever and the hub (Figure 56).

FOR SAFETY: When brake is disabled, do not push or tow the machine on inclines or operate machine.

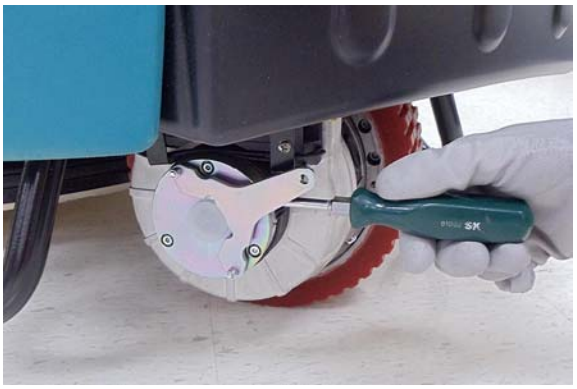

FIG. 56

Only push or tow the machine on a level surface. Do not exceed 2 mph / 3.2 kph. When towing machine, only tow it from the front by the stabilizer arms (U-shape bars).

Immediately after pushing or towing the machine, enable the brake. Never leave or operate the machine with the brake disabled.

TRANSPORTING THE MACHINE

When transporting the machine by use of trailer or truck, carefully follow the loading and tie-down procedures:

FOR SAFETY: When transporting machine, go slowly on inclines and slippery surfaces.

1. Raise the burnishing head to the up position.
2. Load the machine using a ramp that can support the machine weight and operator. Do not operate the machine on a ramp incline that exceeds a 19.5% grade level (Figure 57). A winch must be used when ramp incline exceeds a 19.5% grade level.

FOR SAFETY: When transporting machine, use a ramp that can support the machine weight and operator.

Do not operate the machine on a ramp incline that exceeds a 19.5% grade level. Use tie-down straps to secure machine to truck or trailer.

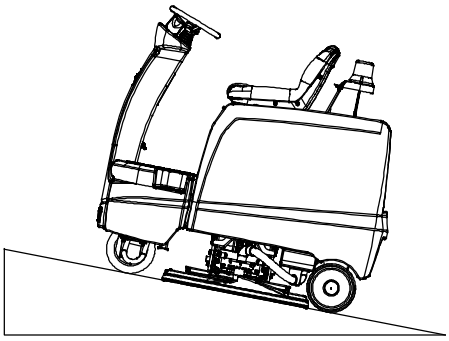

19.5% maximum ramp grade

FIG. 57

3. Once loaded, position the front of the machine up against the front of the trailer or truck. Lower the burnishing head to the floor and turn the key off (Figure 58).
4. Place a block behind each wheel (Figure 58).
5. Secure the front and rear of the machine with tie-down straps (Figure 58). Route the front strap through the stabilizer arms (U-shape bars). Route the rear strap above the rear axle at center. It may be necessary to install tie-down brackets to the floor of your trailer or truck.

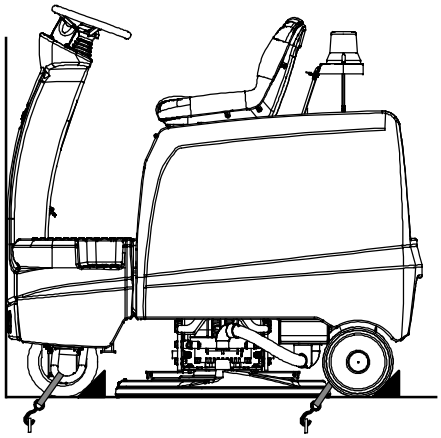

FIG. 58

STORING MACHINE

The following steps should be taken when storing the machine for extended periods of time.

1. Raise burnishing head in the transport position.
2. Park the machine in a cool, dry area. Do not expose the machine to rain. Store indoors.

NOTE: To prevent potential machine damage store machine in a rodent and insect free environment.

3. Remove the batteries, or charge them every three months.

TROUBLESHOOTING

PROBLEM	CAUSE	SOLUTION
Fault indicator light is on or machine is beeping	Machine fault has been detected	See FAULT INDICTOR LIGHT AND FAULT BEEP CODES in manual
No power	Emergency stop button activated	Turn button to reset
	Batteries discharged	Recharge batteries
	Loose or disconnected battery cable	Secure battery cable connections
	Circuit breaker tripped	Reset 150 A main circuit breaker
	Faulty key switch	Contact Service Center
	Machine fault has been detected	See FAULT INDICTOR LIGHT AND FAULT BEEP CODES in manual
Machine does not propel	Propel fault has been detected.	See FAULT INDICTOR LIGHT AND FAULT BEEP CODES in manual
	Operator not seated in seat	Operator must be seated to operate machine
	Seat sensor wire harness plug is disconnected	Connect seat sensor wire harness plug
	Faulty propel motor or wiring	Contact Service Center
	Worn carbon brushes in motor	Contact Service Center
Pad motor does not operate	Low voltage interrupter activated	Recharge batteries
	Pad motor fault has been detected.	See FAULT INDICTOR LIGHT AND FAULT BEEP CODES in manual
	Faulty pad motor or wiring	Contact Service Center
	Worn carbon brushes in motor	Contact Service Center
Vacuum motor does not operate	Vacuum motor fault has been detected	See FAULT INDICTOR LIGHT AND FAULT BEEP CODES in manual
	Faulty vacuum motor or wiring	Contact Service Center
	Circuit breaker tripped on vacuum	Reset circuit breaker button
Burnishing head will not lower or raise.	1-STEP button not pressed	Press 1-STEP button
	Low voltage interrupter activated	Recharge batteries
	Actuator fault has been detected	See FAULT INDICTOR LIGHT AND FAULT BEEP CODES in manual
Battery charger will not operate	Charger fuse blown	Replace charger fuse
	Error detected	See BATTERY CHARGER ERROR CODES in manual
	Faulty charger	Replace charger
Short run time	Low battery charge	Charge batteries
	Batteries need maintenance	See BATTERY MAINTENANCE.
	Defective battery or end of battery life	Replace batteries
	Charger programmed incorrectly	See CHARGING BATTERIES
	Faulty charger	Replace battery charger
Unable to change burnishing settings. Lockout light is blinking.	QA Controls Supervisor settings are activated	Contact supervisor.

GENERAL MACHINE DIMENSIONS/CAPACITIES/PERFORMANCE

MODEL	24 in / 610 mm	27 in / 686 mm
Length	58.5 in / 1486 mm	58.5 in / 1486 mm
Width	30 in / 762 mm	31.5 in / 800 mm
Height	55 in / 1397 mm	55 in / 1397 mm
Weight	596 lb / 270 kg	600 lb / 272 kg
Weight with batteries	1,346 lb / 610 kg	1,350 lb / 612 kg
GVWR	1650 lb / 748 Kg	1650 lb / 748 Kg
Cleaning path width	24 in / 610 mm	27 in / 686 mm
Productivity rate (max.)	30,250 ft^2/hr / 2,813 m^2/hr	34,375 ft^2/hr / 3,197 m^2/hr
Burnishing speeds (standard settings)	Low: 150 fpm / 45.7 mpm Med: 175 fpm / 53.3 mpm High: 200 fpm / 61.0 mpm	Low: 150 fpm / 45.7 mpm Med: 175 fpm / 53.3 mpm High: 200 fpm / 61.0 mpm
Transport speed (max.)	Fwd: 435 fpm/8 Kpmh Rev: 240 fpm/4.4 Kpmh	Fwd: 435 fpm/8 Kpmh Rev: 240 fpm/4.4 Kpmh
Aisle turn (min.)	70 in / 1,778 mm	70 in / 1,778 mm
Grade level (max.)	Transport:19.5%, Burnishing: 7%	Transport: 19.5%, Burnishing: 7%
Propel motor	24 V, 41 A, 1.1 hp / .82 kW	24 V, 41 A, 1.1 hp / .82 kW
Pad motor	36 V, 100 A, 9.4 hp max / 7 kW	36 V, 100 A, 9.4 hp max / 7 kW
Pad Pressure	Low: 45 lb/ 20.4 Kg Med: 65 lb/ 29.5 Kg High: 85 lb/ 38.5 Kg	Low: 45 lb/ 20.4 Kg Med: 65 lb/ 29.5 Kg High: 85 lb/ 38.5 Kg
Pad speed	1500-1600 rpm	1500-1600 rpm
Vacuum motor (Active Dust Control)	36 V, 12 A, 1400W / 1.4 kW	36 V, 12 A, 1400W / 1.4 kW
HEPA filtration	99.97% @0.3 micron	99.97% @0.3 micron
Dust bag capacity	6 qt / 5.7 l	6 qt / 5.7 l
Machine Voltage	36 VDC	36 VDC
Battery capacity	Six 6V, 435 Ah Wet/lead-acid (std.) Six 6V, 390 Ah AGM (opt.)	Six 6V, 435 Ah Wet/lead-acid (std.) Six 6V, 390 Ah AGM (opt.)
Total power consumption	120A / 4.3 kw nominal	120A / 4.3 kw nominal
Run time (max.)	3.0 hours	3.0 hours
Battery charger	120 VAC, 60 Hz, Output 36VDC, 25 A	120 VAC, 60 Hz, Output 36VDC, 25 A
	220/240 VAC, 50/60 Hz Output 36 VDC, 25 A	220/240 VAC, 50/60 Hz Output 36 VDC, 25 A
Protection grade	IPX3	IPX3
Sound pressure level L_{pA}	69 dB(A)	69 dB(A)
Sound Uncertainty K_{pA}	3.0 dB(A)	3.0 dB(A)
Sound power level L_{wA} + uncertainty K_{wA}	xx dB(A)	xx dB(A)
Machine vibration at hand-arm	<2.5 m/s^2	<2.5 m/s^2
Machine vibration at operator seat	<2.5 m/s^2	<2.5 m/s^2
Machine vibration uncertainty K	0.2 m/s^2	0.2 m/s^2
Ambient operating temperature	Min: 32°F/0°C Max: 110°F/43°C	Min: 32°F/0°C Max: 110°F/43°C

Values per IEC 60335-2-72

Specifications are subject to change without notice.
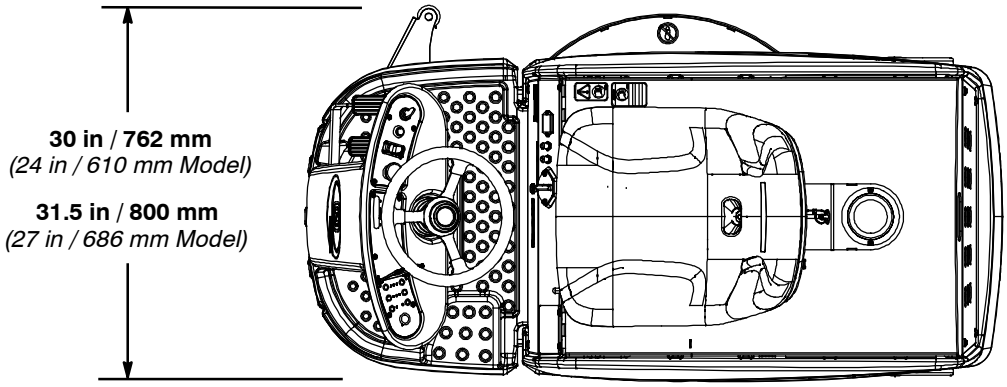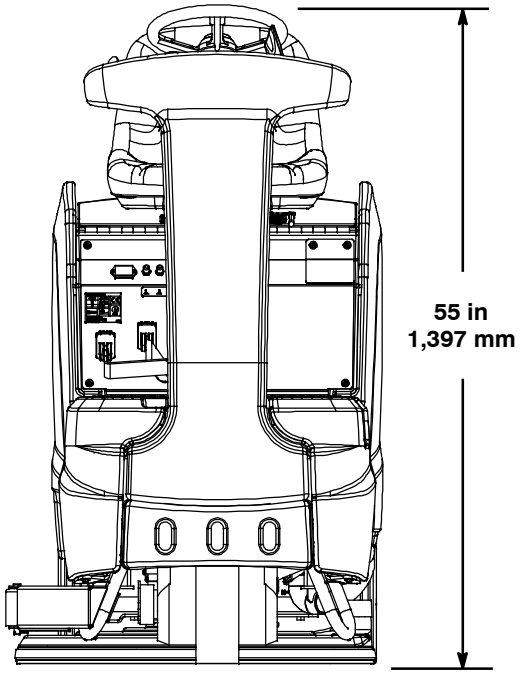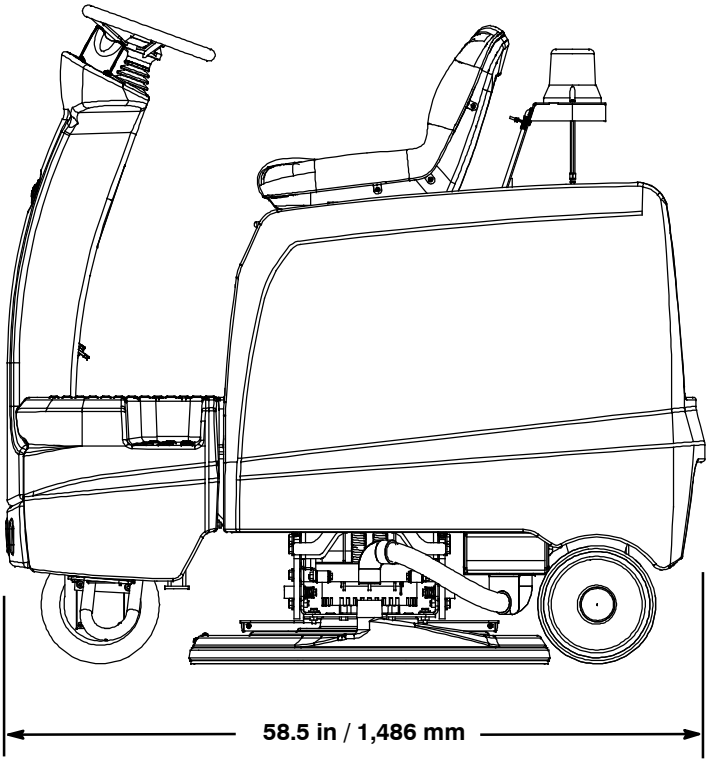
MACHINE DIMENSIONS