Tornado CK ULW 13/1

OPERATIONS AND MAINTENANCE MANUAL
FOR COMMERCIAL USE ONLY

Model No. TV280-W12-U

CONTENTS

Getting Started

Introduction 3
Warranty 4
Grounding Instructions 5
Important Safety Instructions 6
Technical Specifications 8

Operating Instructions

Operator Guidelines 8
Key Features 9
Assembly 10
Operation 12
Maintenance 14
Common Replacement Parts 18
For Best Performance 18

Your new Tornado unit is a high quality, precision-made product. All parts used in the manufacturing of this unit have passed rigid quality control standards prior to assembly. Please safeguard the original receipt/invoice given at the time of purchase. If you experience any problems with your unit during the warranty period, the original receipt/invoice will act as proof of purchase.

Upon receipt, inspect outer box for exterior damage. Unpack all internal parts, ensure no hidden damage is found.

Each unit is tested and thoroughly inspected prior to shipping. If damage is discovered, immediately notify the transportation company that delivered your machine and request an inspection. As a manufacturer, we are unable to act upon any claim for concealed damage and you must originate the claim. Be sure to keep the carton, packing inserts, and carrier's receipt until the inspector has verified your claim.

Protect the environment

Please dispose of packaging materials in an environmentally safe way according to local waste disposal regulations.

Always remember to recycle.

WARRANTY

Warranty

Within 30 days of purchase, to activate product warranty, go to:
https://tornadovac.com/services/warranty-registration-form.aspx
For warranty information go to **www.tornadovac.com**.

Warning Labels

Prior to operating the unit, read and understand completely this owner's manual paying special attention to warning labels. These labels indicate a potentially hazardous situation that could result in death or serious injury if not avoided. Use only as described in this manual.

Important

There are no owner serviceable parts inside this machine. Removal of screws and accessing internal components will void all warranty claims.

GROUNDING INSTRUCTIONS

This vacuum cleaner must be grounded. If it should malfunction or break down, grounding provides a path of least resistance for electric current to reduce the risk of electric shock. This vacuum cleaner is equipped with a cord having an equipment-grounding conductor and grounding plug. The plug must be plugged into an appropriate outlet that is properly installed and grounded in accordance with all local codes and ordinances.

This vacuum cleaner is for use on a nominal 115-volt circuit and has a ground plug (see illustration). Make sure that the vacuum is connected to an outlet having the same configuration as the plug. No adapter should be used with this vacuum

Improper connection of the equipment-grounding conductor can result in the risk of electric shock. Check with a qualified electrician or service person if you are in doubt as to whether the outlet is properly grounded. **DO NOT MODIFY THE PLUG PROVIDED WITH THE VACUUM** – if it will not fit the outlet, have a proper outlet installed by a qualified electrician.

STATE OF CALIFORNIA PROPOSITION 65 WARNINGS:

WARNING: This product contains one or more chemicals known to the State of California to cause cancer.

WARNING: This product contains one or more chemicals known to the State of California to cause birth defects or other reproductive harm.

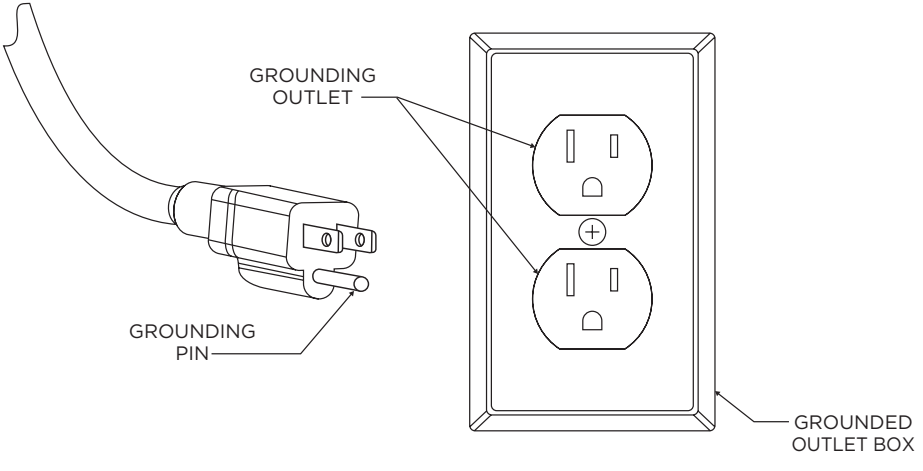

IMPORTANT SAFETY INSTRUCTIONS

Read and understand this owner's manual and all labels on the unit before operating. Safety is a combination of common sense, staying alert, and knowing how your unit works. To reduce the risk of personal injury or damage to your unit use only as indicated in this manual.

FOR COMMERCIAL USE ONLY
To reduce the risk of fire, electrical shock, or injury, the instructions below must be read and understood completely prior to machine operation

IMPORTANT: This machine must only be used for the manufacturer's approved application as described in this manual.

The machine must be unpacked and assembled in accordance with these instructions. Only genuine accessories and spare parts provided with the machine or those approved by the manufacturer should be used. The use of other accessories may impair the safety of the machine. All repairs must be performed by a qualified service agent.

WARNING:

- DO NOT modify the machine from its original design.
- Operators must be fully trained in the use of the machine in accordance with these instructions and be able to perform regular user maintenance as outlined in this manual.
- Operators should be physically capable to maneuver, transport and operate the machine.
- Operators should be able to recognize unusual operation of the machine and report any problems.
- This machine is not intended for use by persons (including children) with reduced physical, sensory or mental capabilities, or lack of experience and knowledge unless they have been given instruction concerning use of the machine and are under supervision by a person responsible for their safety.
- Keep children and unauthorized persons away from the machine when in use. DO NOT use the machine as a toy.
- DO NOT use charger with damaged cord or plug. If appliance is not working as it should, has been dropped, damaged, left outdoors, or dropped into water, contact an authorized service center for service.
- DO NOT use where hazardous dust is present.
- DO NOT use in an explosive environment.
- DO NOT pick up or use near flammable or combustible fluids, hazardous dusts or vapors.

SAVE THESE INSTRUCTIONS

IMPORTANT SAFETY INSTRUCTIONS

WARNING:

- CAUTION – If it is suspected that there is hazardous dust or flammable/corrosive material, stop cleaning the area immediately and consult your supervisor.
- DO NOT use to clean up any burning or lighted materials such as cigarettes, matches, ashes, or other combustible objects.
- Only use the machine on firm, level surfaces. DO NOT use the machine on gradient or slope of more that 2%.
- CAUTION – should not be used or stored outdoors or on uneven surfaces. Protect from rain.
- Take care when using this machine near the top of stairs to avoid loss of balance.
- DO NOT cover the machine when in use.
- DO NOT leave the machine running unattended.
- Keep hair, loose clothing, hands, feet, and all other parts of the body away from openings and moving parts. Do not put hands under base as rotating parts can cause injury.
- DO NOT put any object into openings. DO NOT use with any opening blocked. Keep free of dust, debris and anything that may reduce airflow.
- DO NOT use volatile or combustible solvents (e.g., diesel, petrol, PA, trichloromethane) nor any corrosive, toxic, or highly irritant substance to wash floors, even if diluted. In the event of accidental contact with any such substances (e.g., due to spills) follow the decontamination procedures in force at the user site. If in any doubt about the condition of the machine, contact Tornado or the dealer/agent who supplied the machine.
- DO NOT leave the machine unattended when plugged in. Unplug from outlet when not in use or attempting any maintenance or adjustment.
- DO NOT pull or carry the unit by the cord, use cord as a handle, close a door on the cord, or pull cord around sharp edges or corners.
- DO NOT run machine over cords. Keep cords away from heated surfaces.
- DO NOT unplug the unit by pulling on cord. To unplug, grasp the plug, not the cord. Do not handle machine with wet hands. Turn off all controls before unplugging.
- Connect only to a properly grounded outlet. See grounding instructions.
- DO NOT use cleaning solutions with a pH below 3 or above 11 in order to prevent damage to sensitive components.
- The machine must be kept clean and in good condition. If any parts are damaged, they shall only be replaced by an approved part by the manufacturer, its service agent or a similar qualified person in order to avoid a hazard.
- Only replace the power cord with original OEM equipment.

SAVE THESE INSTRUCTIONS

TECHNICAL SPECIFICATIONS

Specification	Value
Model	TV280-W12-U
Power	5.5 A
CFM	115
Cord Length	12" Pigtail w/30' Cord
Edge Cleaning	Front and Side
Height Adjustment	Automatic
Weight	8 lbs.
Decibel	79 db(A)/69.9 db(A) (Low Speed)
Brushroll	Wood
Vacuum Bag	HEPA Media
Certifications	UL Approved LEED Qualifying (Low Speed Only)

OPERATOR GUIDELINES

Let the machine do the work. Grip the handle as lightly as possible.

- Wear suitable footwear to avoid slipping.
- Do not smoke when using the machine.

The manufacturer cannot accept responsibility for damage caused when the appliance is not used in accordance with the instructions provided or for uses other than those for which it was intended.

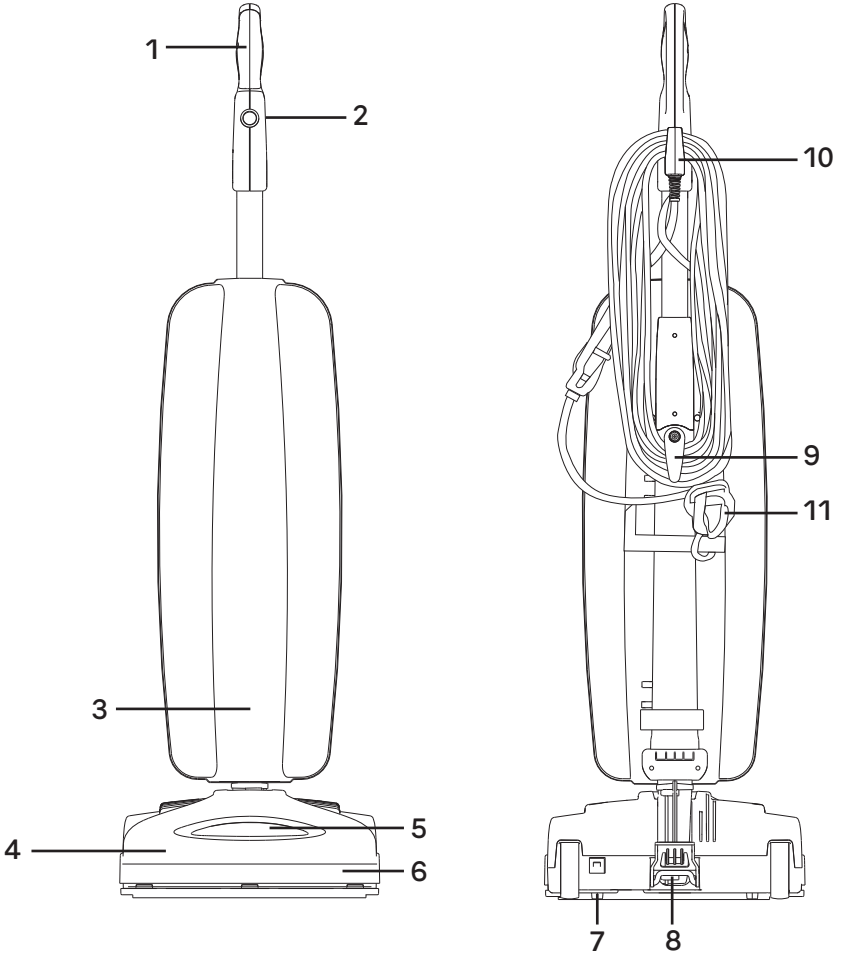

1 Ergonomic Handle
2 On/Off Power Switch, Two Speed
3 Bag Compartment
4 Vacuum Nozzle
5 Headlight
6 Furniture Guard
7 Circuit Breaker Reset Button
8 Handle Release Pedal
9 Quick Release Cord Hook
10 Upper Cord Hook
11 Cord Restraint

ASSEMBLY

Attaching the Handle to the Vacuum

NOTE: Do not plug in the vacuum until it is completely assembled. The vacuum cleaner and the handle are packed separately and require assembly.

- Thread the cord through the lower and upper cord guides on the back of the vacuum bag (Fig. 1).
- Remove the handle bracket by removing the two screws (Fig. 2).
- Place handle onto the back of the vacuum, aligning holes with pegs (Fig. 3).
- Place the handle bracket back into position (Fig. 4).
- Secure with two screws removed in Step 2.
- Open the bag compartment to ensure a vacuum bag is in place.
- Your vacuum is now ready for use.
- If storing the vacuum, wrap the cord clockwise around the top and bottom cord hooks. Fasten the plug to the wrapped cord using the channel on the plug.

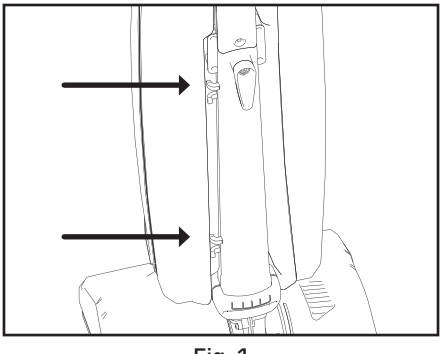

Fig. 1

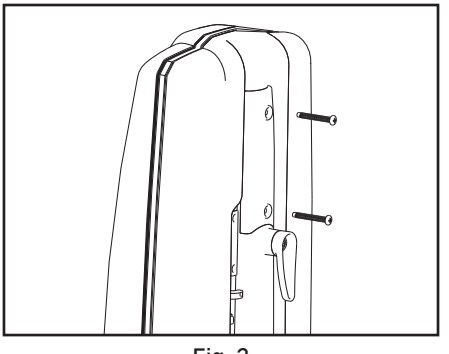

Fig. 2

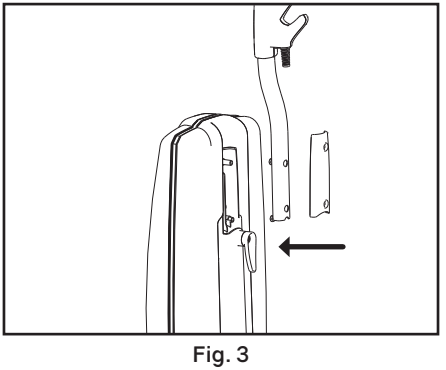

Fig. 3

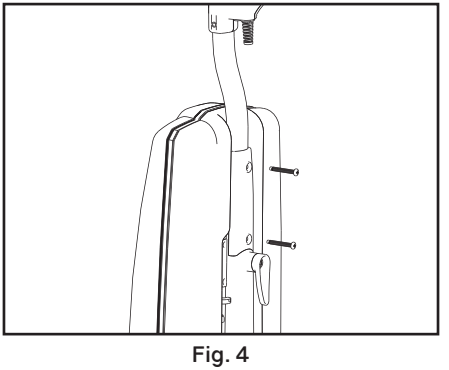

Fig. 4

Attaching the Extension Power Cord to the Cord Lock

- Connect the extension power cord to the pigtail cord on the vacuum.
- Snap the extension power cord into the slot on the end of the cord lock.
- Turn the knob on the bottom of the cord lock to tighten the lock and prevent the cords from pulling apart (Fig. 1).

Attaching the Cord Retainer to the Handle

- Pull apart the rounded end of the cord retainer to open it up enough to fit around the carry handle (Fig. 2).
- Attach the cord retainer around the carry handle.
- Create a loop in the power cord and push it through the slot and over the hook of the cord retainer.
- Pull down on the power cord to remove any slack.

Unwinding the Power Cord

- The lower cord hook rotates to allow for quick access to the power cord (Fig. 3). Turn the lower cord hook upward and you can quickly drop the power cord to the floor without unwinding it from the cord hooks.
- When storing the vacuum cleaner, turn the lower cord hook to the downward position and wind the power cord around the cord storage hooks.

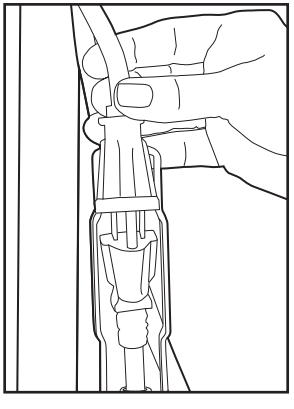

Fig. 1

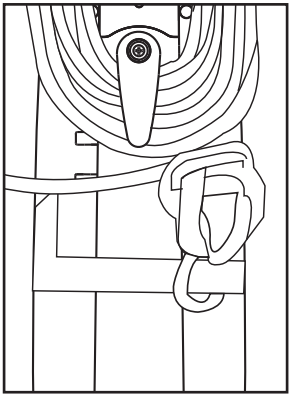

Fig. 2

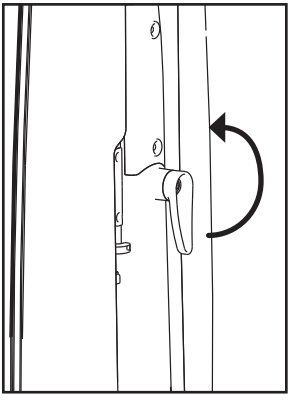

Fig. 3

OPERATION

Reclining the Handle

- Press the handle release pedal located on the back of the vacuum with your foot to recline the handle (Fig. 1).

On/Off Switch, Two Speed

- The power switch located on the vacuum handle, is a three-way switch (Fig. 2). The middle position is the “Off” setting, the top position is the “On” setting and the bottom position is for “Maximum Power” (Fig. 3).
- Use the “Maximum Power” setting for carpet cleaning. Use the “On” setting for cleaning bare floors and throw rugs. Always turn the vacuum cleaner to the “Off” setting before unplugging it from the electrical outlet.

Edge Cleaning

The edge cleaning feature provides improved cleaning near walls and stationary furniture. For maximum edge cleaning, place the left side of the nozzle, from the user’s perspective, against the wall or stationary furniture.

Automatic Carpet Height Adjustment

Your vacuum is designed with an automatic self-adjusting nozzle. No manual adjustments are required. The height of the nozzle automatically adjusts to the flooring surface. This self-adjusting feature allows the nozzle to float evenly over all flooring surfaces.

Bare Floor Cleaning

Your vacuum is equipped with a squeegee on the bottom of the vacuum to improve its effectiveness in cleaning bare floors (Fig. 4). When cleaning tile, hardwood, vinyl, etc., use the “On” setting for best results.

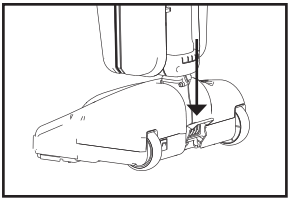

Fig. 1

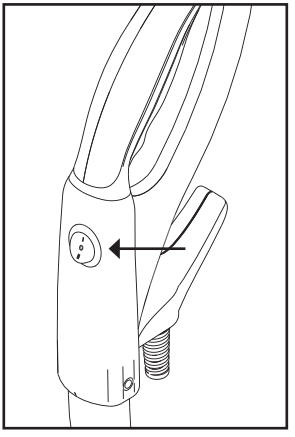

Fig. 2

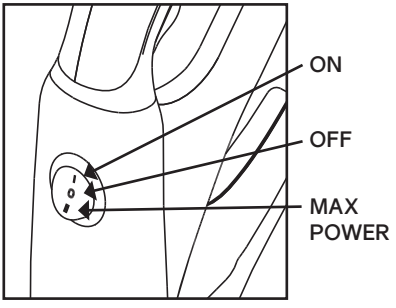

Fig. 3

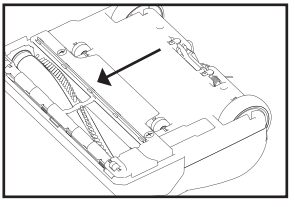

Fig. 4

Vacuuming Under Furniture

Your vacuum will lay flat on the floor for effective cleaning under beds and tables.

- Press the handle release pedal once for normal vacuum cleaning (Fig. 1).
- Continue to lower the handle to enable the vacuum to lay flat on the floor (Fig. 2).

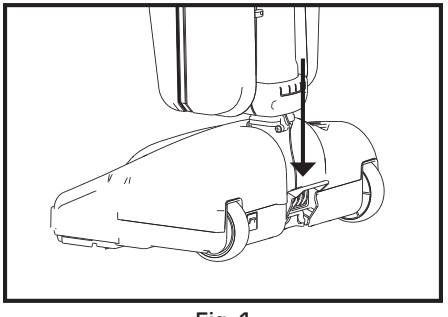

Fig. 1

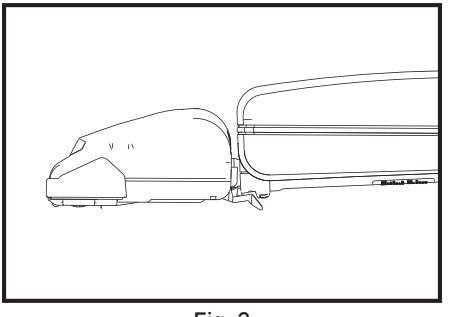

Fig. 2

MAINTENANCE

Power Cord Care

- If the cord or plug has any apparent damage, refrain from using the vacuum. Please visit an Authorized Distributor for a new cord or plug.
- When the vacuum is in use, hold the cord to keep from running over it.
- Avoid obstructions and do not pull the cord around sharp edges or corners.
- Always keep the cord away from heated surfaces and never close doors on it as this may cause damage to the wiring.
- To unplug, always grasp the plug, not the cord.

Replacing the Vacuum Bag

NOTE: Unplug the vacuum cleaner from the electrical outlet before changing the bag.

- Unzip the bag compartment.
- Remove the used vacuum bag by pulling the green bag collar tab away from the vacuum (Fig. 1). Slide the used bag out of the bag holder which automatically seals the bag opening (Fig. 2). Discard the used bag.
- To install a new bag, slide the bottom of the green bag collar into the bag holder until it “snaps” into place (Fig. 3).
- Push the top of the bag collar upward until the collar “snaps” into place on the vacuum (Fig. 4).
- Tuck the bag corners into the bag compartment then zip the bag compartment closed.

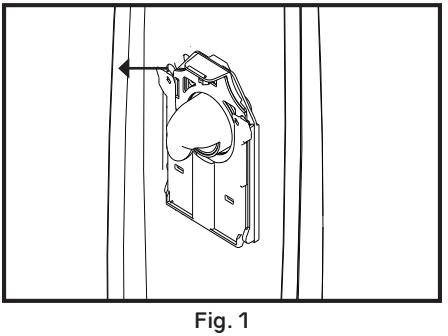

Fig. 1

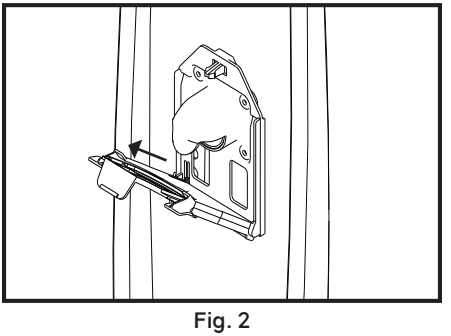

Fig. 2

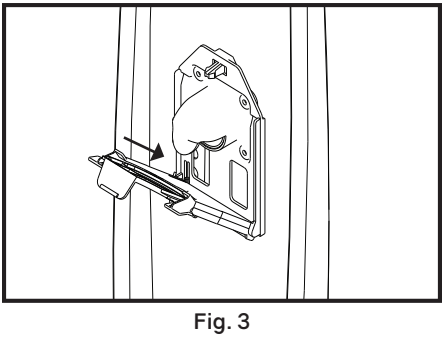

Fig. 3

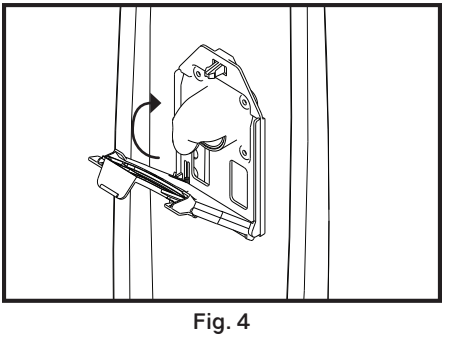

Fig. 4

Removing and Reinstalling the Bottom Plate

WARNING! To reduce the risk of electrical shock or injury from moving parts, unplug before servicing or cleaning.

To Remove the Bottom Plate:

- Press the handle release pedal to place the vacuum cleaner in the flat position.
- Turn the vacuum cleaner over, exposing the bottom plate.
- Turn the two screws a quarter turn to release the bottom plate (Fig. 1). Remove the bottom plate.
- Reinstall the bottom plate by aligning the front edge of the bottom plate into the notches inside the nozzle housing (Fig. 2).
- Press the bottom plate into position until the plate “clicks” on both sides. Tighten the two screws a quarter turn to secure the bottom plate.

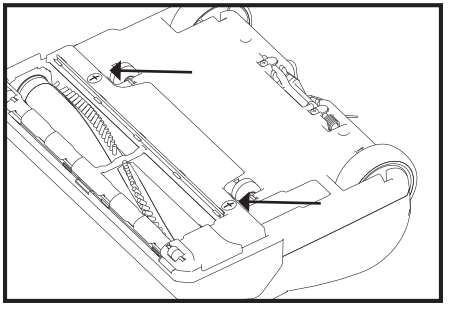

Fig. 1

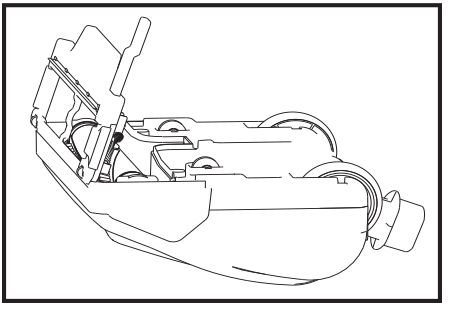

Fig. 2

Replacing the Agitator Belt

WARNING! To reduce the risk of electrical shock or injury from moving parts, unplug the unit before servicing or cleaning.

NOTE: To ensure maximum cleaning efficiency, the belt should be checked regularly to be sure it is in good condition. Check to see if the belt is stretched, cracked, or if excessive slipping is occurring. Replace if needed.

- Remove the bottom plate (see page 13).
- Remove the brushroll and the worn or broken belt from the brushroll pulley and the motor drive shaft (Fig. 1).
- Loop the new belt around the motor drive shaft and the brushroll (Fig. 2).
- Reinstall the brushroll into the housing.
  Turn the brushroll by hand, making sure the belt is not twisted and all rotating parts move smoothly.
- Reinstall the bottom plate (see page 15).

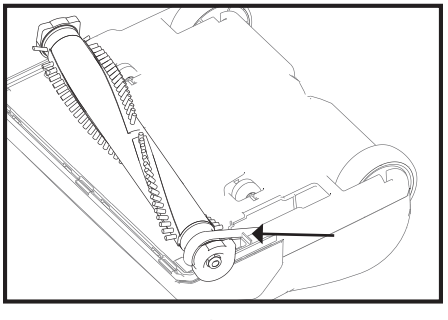

Fig. 1

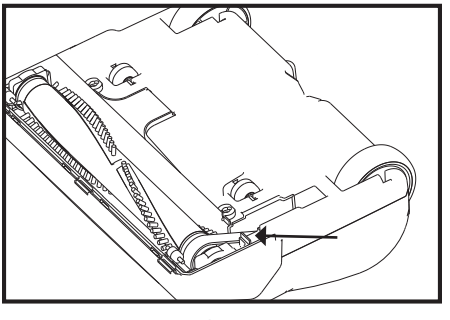

Fig. 2

Resetting the Circuit Breaker

WARNING! To reduce the risk of electrical shock or injury from moving parts, unplug the unit before servicing or cleaning.

Your vacuum features a circuit breaker to protect the machine against damage due to a surge in the electrical current. Electrical surging can be a result of, though not limited to, a jammed motor fan.

Should your vacuum cleaner experience a jammed brushroll with the circuit breaker tripping, turn the vacuum off, and unplug the unit. Inspect the brushroll by removing the bottom plate (see page 15) and remove any debris that may be causing the jam. Reinstall the bottom plate (see page 15) and reset the circuit breaker by pressing the Circuit Breaker Reset Button (Fig. 1). Plug in the power cord, and turn on the vacuum. If the vacuum fails to turn on, please visit an Authorized Distributor for help.

Replacing the Squeegee

If your squeegee splits or begins to look worn, simply slide the worn squeegee from its track and slide a new one into the track (Fig. 2). If you have trouble installing the new squeegee, please visit an Authorized Distributor for help.

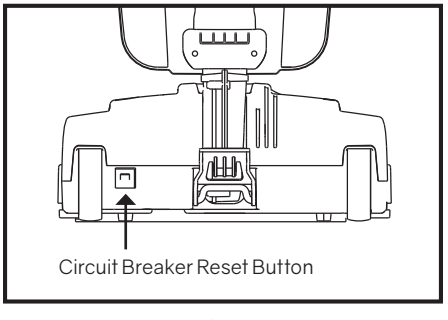

Fig. 1

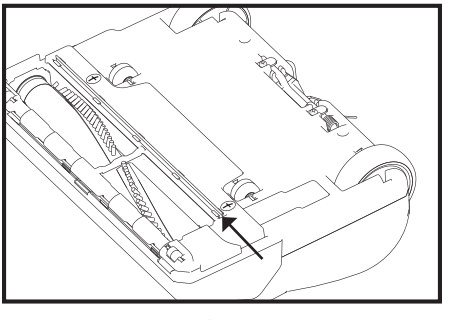

Fig. 2

COMMON REPLACEMENT PARTS

- Genuine HEPA Media Vacuum Bags CLH-6
- Genuine Paper Vacuum Bags B211-8800
- Genuine Vacuum Belts B014-0814B

FOR BEST PERFORMANCE

Keep your vacuum clean and in good operating condition.

- Change the vacuum bag once a month or when the bag is 2/3 full to maximize cleaning performance.
- Always use genuine vacuum bags and replacement parts. Use of other products may result in poor cleaning performance, potential vacuum cleaner damage and may void the warranty. Genuine products are designed for maximum cleaning performance.
- Have your vacuum checked periodically by the distributor where your vacuum was purchased.
- Store your vacuum carefully in a dry area.
- For optimum cleaning performance and safety, follow your owner's manual instructions.

Tornado Industries, LLC
3101 Wichita Court
Ft. Worth, TX 76140-1755
Phone: 800-VACUUMS
Fax: 1-817-551-0719
WWW.TORNADOVAC.COM

Record of Purchase

Serial Number:_____

Purchase Date:_____

Dealer:_____

Phone Number:_____

T-OMTV280-W12-U 12/2022