1610

Dual Technology Carpet Cleaner

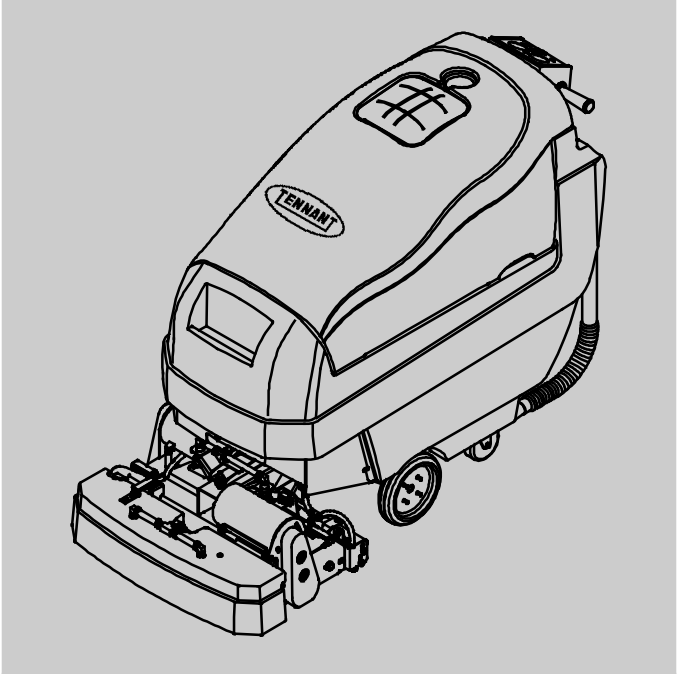

Parts Manual

(S/N 10339653-)

More than clean, it's ReadySpace.®

Tennant*True*® Parts

North America / International

For the latest Parts manuals and other language Operator manuals, visit:

www.tennantco.com/manual

9003456
Rev. 09 (05-2023)

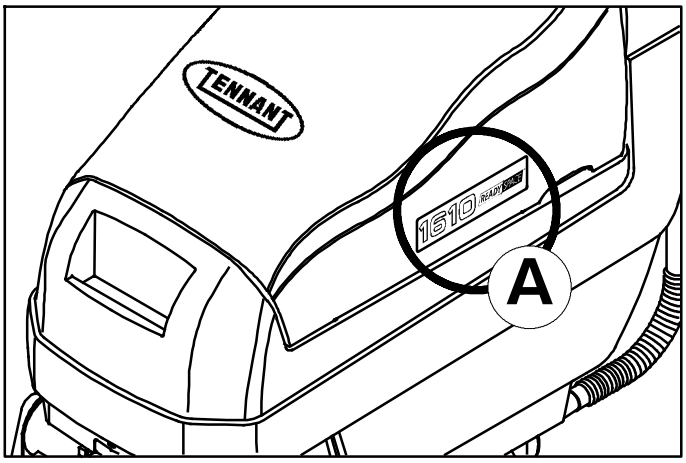

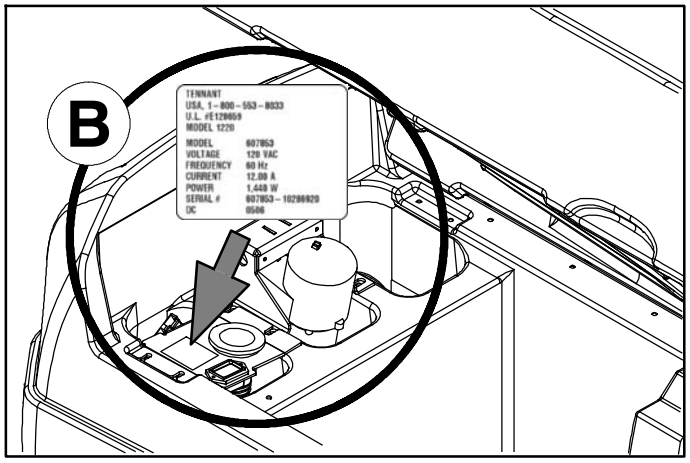

Ref	Part No.	Serial Number	Description	Qty.
1	82681	(000000-)	Bracket Wldt, Lpg Mount	1
▽ 2	63810	(000000-)	Latch Assy, Lpg Tank Mtg, W/Nut	4
▲ 3	51839	(000000-)	Nut Adjustable, Lpg Tank Mtg	2
4	49263	(000000-)	Tie, Cable	3
	82556	(000000- 001039)	Bracket, Vaporizer	1
	54930	(000000-)	Vaporizer, LPG	1

D

C

HOW TO ORDER PARTS - See diagram above

Only use TENNANT Company supplied or equivalent parts. Parts and supplies may be ordered online, by phone, by fax or by mail.

Follow the steps below to ensure prompt delivery.

1. **(A)** Identify the machine model.
2. **(B)** Identify the machine serial number from the data label.
3. **(C)** Ensure the proper serial number is used from the parts list.
4. Identify the part number and quantity. Do not order by page or reference numbers.
5. Provide your name, company name, customer ID number, billing and shipping address, phone number and purchase order number.
6. Provide detail shipping instructions.

(D) ▽ - identifies an assembly
▲ - identifies parts included in assembly

Please fill out at time of installation for future reference.

Model No. - _____

Serial No. - _____

Machine Options - _____

Sales Rep. - _____

Sales Rep. phone no. - _____

Customer ID Number - _____

Installation Date - _____

Tennant Company
10400 Clean Street
Eden Prairie, MN 55344-2650
USA
Phone: (800) 553-8033

www.tennantco.com

Specifications and parts are subject to change without notice.

Copyright © 2007 - 2023 TENNANT Company, Printed in U.S.A.

STANDARD PARTS

GENERAL RECOMMENDED MAINTENANCE ITEMS 5
SOLUTION TANK GROUP 6
RECOVERY TANK GROUP 8
VACUUM MOTOR GROUP 10
CONTROL CONSOLE GROUP 12
COMPONENT PANEL GROUP 14
WHEEL GROUP (S/N 10492843-) 16
WHEEL GROUP (S/N 00000000- 10492842) 18
SCRUB HEAD GROUP 20
SCRUB HEAD GROUP - CONT'D 22
SCRUB HEAD LIFT GROUP 24
READYSPACE VACUUM SHOE AND SOLUTION FLUSH LINE GROUP 26
EXTRACTION VACUUM SHOE GROUP 28
BUMPER GROUP 30
SOLUTION GROUP (S/N 10314332-) . . 32
SOLUTION GROUP - CONT'D (S/N 10314332-) 34
SOLUTION GROUP (S/N 00000000- 10314331) 36
SOLUTION GROUP - CONT'D (S/N 00000000- 10314331) 38
BATTERY AND CHARGER GROUP 40
REPLACEMENT ROLLERS AND BRUSHES . . . 42
MULTI-MEDIA 42
WIRE HARNESS GROUP, MAIN (S/N 10243221-) 43
WIRE HARNESS GROUP, MAIN - CONT'D (S/N 10243221-) 44
WIRING DIAGRAM 46
LADDER DIAGRAM 48

OPTIONS

MANUAL BATTERY WATERING SYSTEM 50
FLOOR TOOL, LOW PRESSURE 330 mm (13 in) 52
FLOOR TOOL, LOW PRESSURE 406 mm (16 in) 54
HAND TOOL, 127 mm (5 in) 56
HAND TOOL, CREVICE 76 mm (3 in) 57
HAND TOOL, UPHOLSTERY LOW PRESSURE 58
HOSES, SOLUTION AND VACUUM 59
PUMP-UP CARPET SPRAYER 59
KIT, CARPET RAKE 60
KIT, SOLUTION SWITCH (S/N 00000000- 10243220) 62

GENERAL RECOMMENDED MAINTENANCE ITEMS

Ref.	Part No.	Serial Number	Description	Qty.
	1013760	(00000000-)	Roller Assy [Soil Transfer]	2
	1008997	(00000000-)	Brush, Scb, 22l, 10sr, Nyl, Spl	2
	1049048	(00000000-)	Caster, Swivel, 4.0d 1.4w, 4hole [400lb]	2
	1068472	(10492843-)	Tire Assy, Foam, Hi- Dns, Grey,2.8/2.5- 04	2
	607452	(00000000- 10492842)	Wheel, 08.0d 2.00w Tpr	2
	1060173	(10514502-)	Cover Assy, Tank, Soltn Fill	1
	606146	(00000000- 10514501)	Screen, Fltr, Soltn Fill, Nat (Replaced By 1060173)	1
	605062	(00000000- 10514501)	Gasket, Cover, Soltn Fill (Replaced By 1060173)	1
	630052	(00000000-)	Float, Shut- Off, (2)Ball, 1.75d	1
	626092	(00000000-)	Gasket, Vacfan, 01.9id 05.7od 0.3, Neo	1
	1035888	(10343030-)	Belt, Drive, 6Grv, 508l X 14w, [6Pj]	2
	377500	(00000000- 10343029)	Belt, Synchronous, 05mm 500l[05p,Plychn]	2
	1008675	(00000000-)	Gasket, Edge, Foam, 24.00l [Fr]	2
	630453	(00000000-)	Gasket, 143mm, Fr Console, Panl	2
∇	1007428	(00000000-)	Filter, Screen, 080 Mesh, Ss Bowl, Pf06	1
▲	180632	(00000000-)	Filter, Screen, In- Line Strainer	1
	180638	(00000000-)	Filter, Screen, 125 Mesh, Sleeve, Nyl	1
	200996	(00000000-)	Filter, Screen, 100 Mesh, Check Valve	1
∇	1025106	(00000000-)	Fan , Vacuum, 5.7d, 024vdc, 3 Stage [Us] (Vac)	1
▲	1073334	(00000000-)	Brush, Carbon, Motor, Ele [1pick=1pkg]	1
∇	1042232	(10409692-)	Motor, 24vdc 0750rpm 0.70hp 14a (Brush)	2
▲	1049739	(10409692-)	Brush Kit, Carbon, Motor, Replmt [4pcs]	1
▲	00954	(00000000-)	Key, Sq, 0.12 X 0.12, 1.00l	1
∇	614165	(00000000-)	Motor Kit, 24vdc,Replmt[1013312 Trnsaxl] (Transaxle)	1
▲	614166	(00000000-)	Brush Kit, Carbon [Qty 4]	1
▲	612874	(00000000-)	Coupling, Transaxle, Replmt	1
▲	612875	(00000000-)	Key, Spcl, Transaxle Replmt	1
	1253706	(10988798-)	Controller, Propel, 24vdc [I- Drive]	1
	630104	(00000000- 10988797)	Control, Spd, 55a [Pmb] (Replaced By Kit 9021120)	1

SOLUTION TANK GROUP

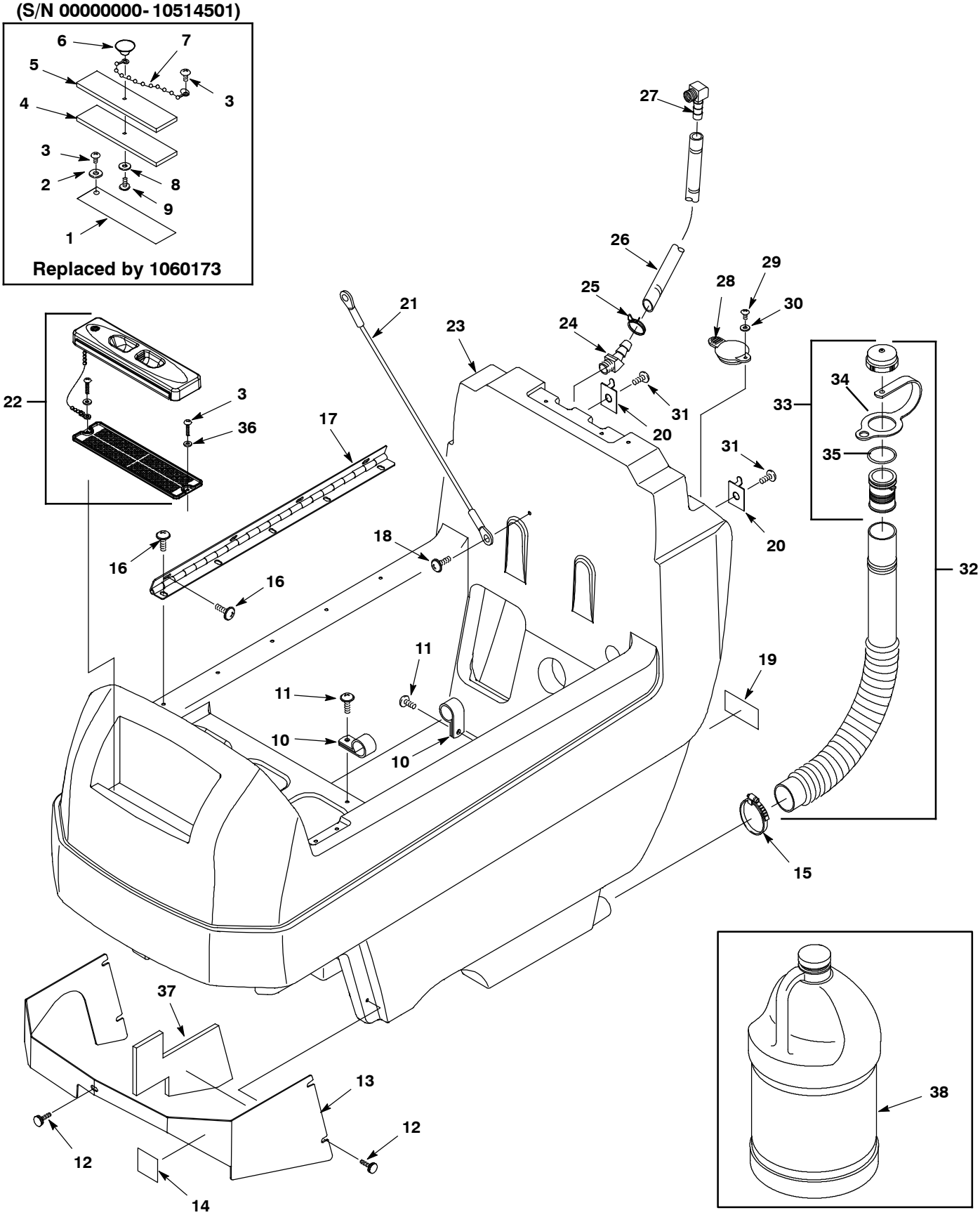

SOLUTION TANK GROUP

	Ref.	Part No.	Serial Number	Description	Qty.
	1	606146	(00000000- 10514501)	Screen, Fltr, Soltn Fill, Nat (Replaced By 1060173)	1
	2	140032	(00000000- 10514501)	Washer, Flat, #6, Ss	2
	3	140826	(00000000-)	Screw, Pan, #06- 32 X 0.75, Ss, Fmg [Ab]	2
	4	605062	(00000000- 10514501)	Gasket, Cover, Soltn Fill (Replaced By 1060173)	1
	5	605061	(00000000- 10514501)	Cover, Fill, Soltn (Replaced By 1060173)	1
	6	578301	(00000000- 10514501)	Knob, Fill Cover, Fem [10- 32]	1
	7	621443	(00000000- 10514501)	Chain, Ball, #10, 157mml, Ss	1
	8	07514	(00000000-)	Washer, Lock, Int, #10, Ss	1
	9	140826	(00000000-)	Screw, Pan, #06- 32 X 0.75, Ss, Fmg [Ab]	1
	10	606697	(00000000-)	Clamp, Cable, Stl, 1.12d X 0.50w, 1hole	3
	11	1019349	(00000000-)	Screw, Trs, M6 X 1.00 X 16, Ss, Sems	3
	12	603012	(00000000-)	Knob, Rnd, 19.0d M6 X 12, Stud, Plstc,Pl	5
	13	1011890	(00000000-)	Shroud, Scb Head [Str]	1
	14	606521	(00000000-)	Label, Gen Hzrd	1
	15	11531	(00000000-)	Clamp, Hose, Wormdrive, 1.06- 2.00d, .56w	1
	16	1019349	(00000000-)	Screw, Trs, M6 X 1.00 X 16, Ss, Sems	9
	17	605244	(00000000-)	Hinge, .25pin .07 2.0w 22.0l, Yel Pl	1
	18	1019349	(00000000-)	Screw, Trs, M6 X 1.00 X 16, Ss, Sems	2
	19	1018849	(00000000-)	Label, Wand	1
	20	601460	(00000000-)	Clip, Hanger, Hose, .25d Hole, Clr Pl	2
	21	140960	(00000000-)	Cable, Glv .13d 014.5l .34eye /.34eye	1
	22	1060173	(10514502-)	Cover Assy, Tank, Soltn Fill	1
	23	611344	(00000000-)	Tank, Soltn, Rm- Tl, Trimmed (Teal)	1
	23	1024034	(00000000-)	Tank, Soltn, Rm- Cphg, Trimmed (Gray)	1
	24	605394	(00000000-)	Fitting, Brs, E45, Bm06/Pm04 [Taped]	1
	25	607775	(00000000-)	Clamp, Hose, Wir, .63 - .66, Blk	1
	26	606879	(00000000-)	Hose, Drain, 0.62id X 23.4l, Vyl	1
	27	150419	(00000000-)	Fitting, Brs, E90, Bm06/Pm04 [Taped]	1
	28	1012965	(00000000-)	Cap, Port, Soltn Fill	1
	29	1018155	(00000000-)	Screw, Pan, M5 X 0.8 X16, Ss, Tcut	1
	30	01683	(00000000-)	Washer, Flat, 0.22b 0.50d .05, Ss [#10]	1
	31	1019349	(00000000-)	Screw, Trs, M6 X 1.00 X 16, Ss, Sems	2
∇	32	1010143	(00000000-)	Hose Assy, Drain, 1.50id X 32.3l, Blk	1
▲∇	33	1008639	(00000000-)	Cap, Drain Assy	1
▲▲	34	1019563	(00000000-)	Strap, Cap, Drain (No Longer Available - Replaced By Assy 1008639)	1
▲▲	35	1008637	(00000000-)	Seal, Org, 1.48id 1.76od	1
	36	41578	(10514502-)	Washer, Flat, 06, Ss	2
	37	1017379	(00000000-)	Insulation, 0.5, Ntch [Aluminized]	1
	38	1017131	(00000000-)	Detergent, Pre- Spray [1pc=1ctn=4- 1gl] (Optional)	1

∇ ASSEMBLY

▲ INCLUDED IN ASSEMBLY

RECOVERY TANK GROUP

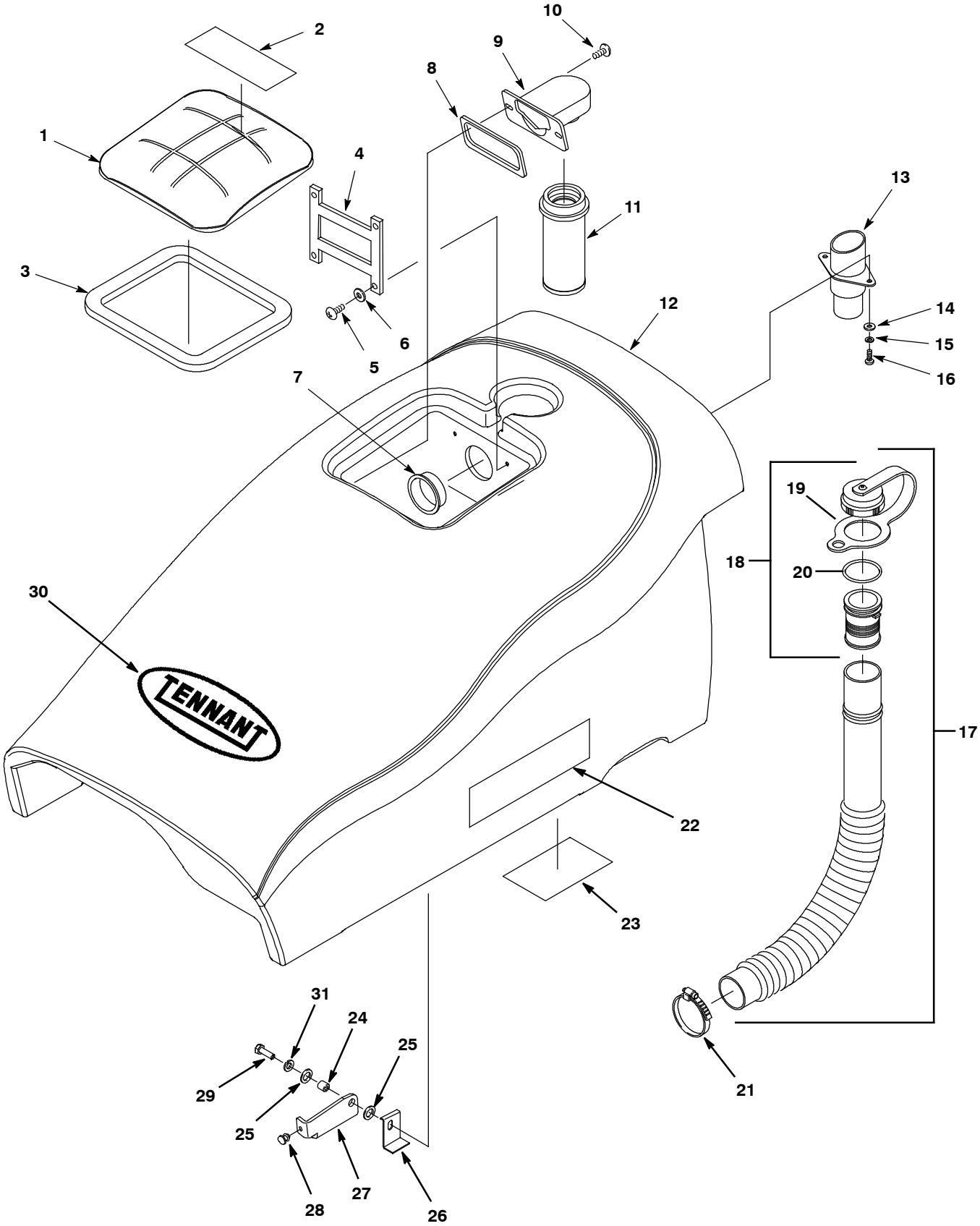

RECOVERY TANK GROUP

	Ref.	Part No.	Serial Number	Description	Qty.
∇	1	1008263	(00000000-)	Lid Assy, W/ Warning Label	1
▲	2	1026386	(00000000-)	Label, Warning [Expl,Fire,Shk En/Fr/Es]	1
▲	3	1001608	(00000000-)	Gasket, Cover, Sq, 749mml [Bladder]	1
∇	1	1024011	(00000000-)	Assy, Lid, Warning Label, Jp (Japan)	1
▲	2	613862	(00000000-)	Label, Warning, 6 X 2 Tj[Dc Brn/Scr/Ext] (Japan)	1
▲	3	1001608	(00000000-)	Gasket, Cover, Sq, 749mml [Bladder]	1
	4	630056	(00000000-)	Hinge, Cover, Tank Lid	1
	5	3701.6	(00000000-)	Screw, Pan, #06- 32 X 0.38, Phl Ss Shtmtl	4
	6	1009168	(00000000-)	Washer, Flat, 0.17b 0.75d .04, Ss	4
	7	610979	(00000000-)	Cap, Plug, 2.0inch, Red	1
	8	630255	(00000000-)	Gasket, Float, Mount	1
	9	630053	(00000000-)	Mount, Cage, Float [20.0 Scrubber]	1
	10	1019349	(00000000-)	Screw, Trs, M6 X 1.00 X 16, Ss, Sems	2
	11	630052	(00000000-)	Float, Shut- Off, (2)Ball, 1.75d	1
	12	1001933	(00000000-)	Tank, Recvy, Rm- Tl, Trimmed (Teal)	1
	12	1024036	(00000000-)	Tank, Recvy, Rm- Cphg, Trimmed (Gray)	1
	13	607372	(00000000-)	Adapter, Hose, Str, 1.50d / 2bolt	1
	14	200301016	(00000000-)	Washer, Flat, M5.3b X 10d X 1, Pl	2
	15	1026457	(00000000-)	Washer, Lock, Split, M5, Ss	2
	16	06932	(00000000-)	Screw, Pan, Phl, M5 X 0.80 X 10, 4.8	2
∇	17	1010143	(00000000-)	Hose Assy, Drain, 1.50id X 32.3l, Blk	1
▲∇	18	1008639	(00000000-)	Cap, Drain Assy	1
▲▲	19	1019563	(00000000-)	Strap, Cap, Drain (No Longer Available - Replaced By Assy 1008639)	1
▲▲	20	1008637	(00000000-)	Seal, Org, 1.48id 1.76od	1
	21	11531	(00000000-)	Clamp, Hose, Wormdrive, 1.06- 2.00d, .56w	1
	22	1017816	(00000000-)	Label, Model, Lh / Rh Side [1610]	2
	23	1018666	(00000000-)	Label, Battery Diagram	1
	24	611418	(00000000-)	Sleeve, P/M, 0.31b 0.44d 0.1l, Stl Pl	1
	25	32490	(00000000-)	Washer, Flat, 0.25, Std	2
	26	1008074	(00000000-)	Bracket, Tank, Sppt, Stop, Yel Pl	1
	27	606527	(00000000-)	Support, Tank, Recvy	1
	28	1014544	(00000000-)	Bumper, Rbr, 0.44d X 0.19l	1
	29	09010	(00000000-)	Screw, Hex, M8 X 1.25 X 25, Ss	1
	30	630229	(00000000-)	Label, Logo, 257mml, White [Tennant]	1
	31	140015	(00000000-)	Washer, Lock, Split, 0.31, Ss	1

∇ ASSEMBLY

▲ INCLUDED IN ASSEMBLY

VACUUM MOTOR GROUP

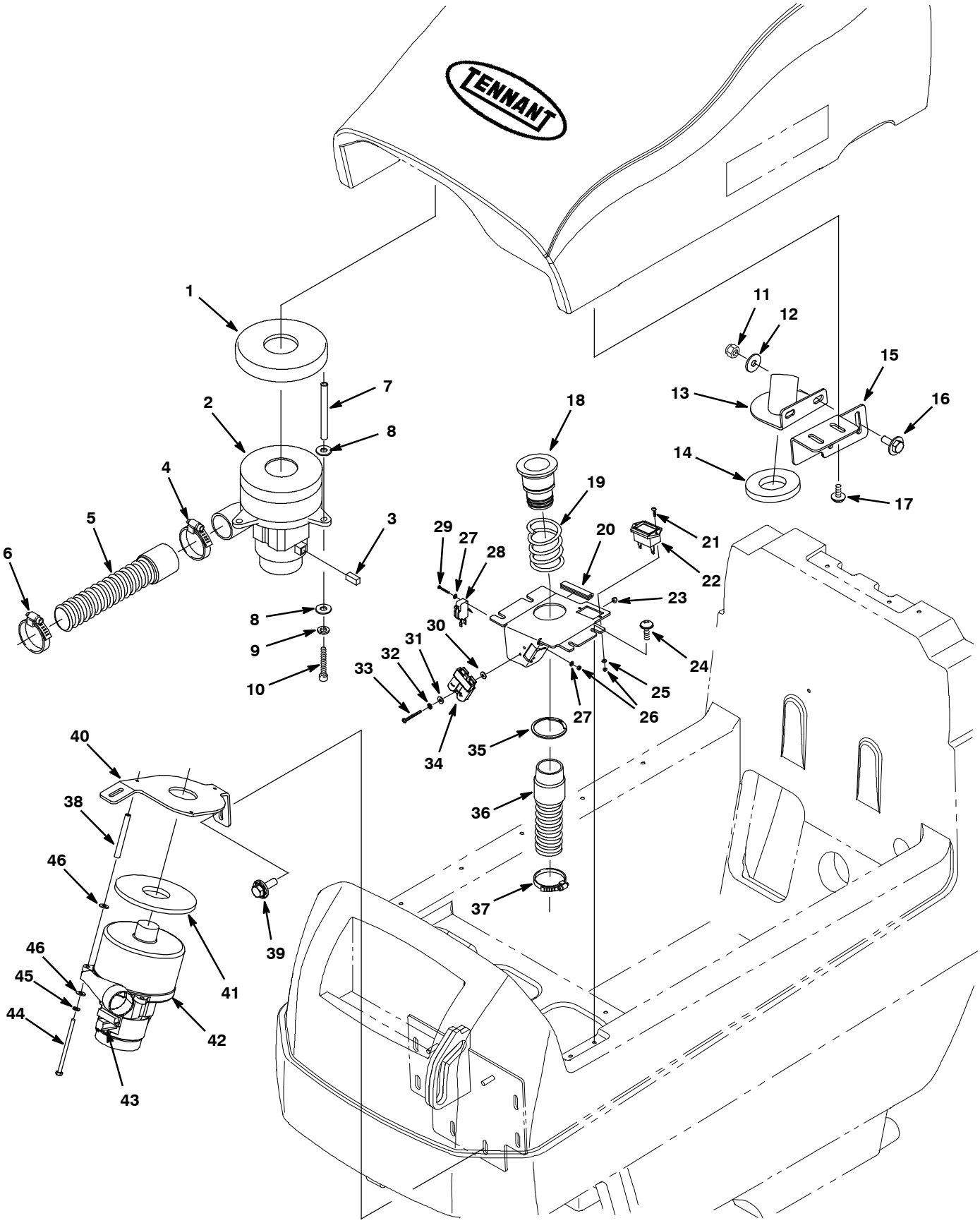

VACUUM MOTOR GROUP

	Ref.	Part No.	Serial Number	Description	Qty.
	1	626092	(00000000-)	Gasket, Vacfan, 01.9id 05.7od 0.3, Neo	1
∇	2	1025106	(00000000-)	Fan , Vacuum, 5.7d, 024vdc, 3 Stage [Us]	1
▲	3	1073334	(00000000-)	Brush, Carbon, Motor, Ele [1pick=1pkg] (1pkg=2 brushes)	1
	4	140308	(00000000-)	Clamp, Hose, Wormdrive, 1.31- 2.25d, .50w	1
	5	613761	(00000000-)	Hose, Vacuum, 1.50id X 009.0l, 1cuff	1
	6	11531	(00000000-)	Clamp, Hose, Wormdrive, 1.06- 2.00d, .56w	1
	7	626041	(00000000-)	Spacer, 6.3mmb 9.4mmd 80.0mml, Zn	3
	8	140000	(00000000-)	Washer, Flat, 0.28b 0.62d .04, Ss	6
	9	140016	(00000000-)	Washer, Lock, Split, 0.25, Ss	3
	10	626123	(00000000-)	Screw, Hex, M6 X 1.0 X 100, 8.8	3
	11	08709	(00000000-)	Nut, Hex, Lock, M8 X 1.25, Nl	2
	12	01685	(00000000-)	Washer, Flat, 0.38b 0.88d .08, Ss	2
	13	1001629	(00000000-)	Bracket, Hose, Vacuum, Recvy Tank	1
	14	100151	(00000000-)	Gasket, Tube, Adapter	1
	15	1015336	(00000000-)	Bracket, Mtg, Vacuum Bracket	1
	16	1020341	(00000000-)	Screw, Hex, M8 X 1.25 X 20, Ss, Sems	2
	17	1019349	(00000000-)	Screw, Trs, M6 X 1.00 X 16, Ss, Sems	2
	18	630011	(00000000-)	Tube, Transition, Flng To Barb	1
	19	630267	(00000000-)	Spring, Cmpr, 2.40od .12wir 02.0l, Pl,Mw	1
	20	606889	(00000000-)	Trim, Plstc, Edge, .12 X .56 X 3.6l	1
	21	200070266	(00000000-)	Screw, Pan, M3 X 0.5 X 16, Phl, Pl	2
	22	1068904	(00000000-)	Gauge, Hourmeter, 05- 277vdc/Vac, 2- Hole	1
	23	140539	(00000000-)	Nut, Hex, Lock, #06- 32, Kep, Ss	2
	24	1019349	(00000000-)	Screw, Trs, M6 X 1.00 X 16, Ss, Sems	2
	25	200301012	(00000000-)	Washer, Flat, M3	2
	26	579211	(00000000-)	Nut, Hex, Lock, M3 X 0.50, Ss	4
	27	601127000	(00000000-)	Washer, Flat, M3.7b X 8d X .5, Pl	4
	28	611005	(00000000-)	Switch, Rlr, 16a, Micro	1
	29	579213	(00000000-)	Screw, Hex, M3 X .5 X 20	2
	30	140011	(00000000-)	Washer, Flat, 0.21b 0.45d .03, Ss	2
	31	140026	(00000000-)	Washer, Flat, #06, Sae Pl	2
	32	140019	(00000000-)	Washer, Lock, Ext, #06	2
	33	140829	(00000000-)	Screw, Pan, #06- 32 X 1.00, Phl, Ss	2
	34	605387	(00000000-)	Connector, Anderson, 50a,Red W/O Contact	1
	35	630016	(00000000-)	Ring, Retaining, Ext, 1.82d	1
	36	1014172	(00000000-)	Hose, Vacuum, 1.50id X 006.0l, 1cuff	1
	37	11531	(00000000-)	Clamp, Hose, Wormdrive, 1.06- 2.00d, .56w	1
	38	626041	(00000000-)	Spacer, 6.3mmb 9.4mmd 80.0mml, Zn	3
	39	1072628	(00000000-)	Screw, Hex, M8 X 1.25 X 25, Ss, Sems	1
	40	1013122	(00000000-)	Bracket, Motor, Vacuum [2nd]	1
	41	626092	(00000000-)	Gasket, Vacfan, 01.9id 05.7od 0.3, Neo	1
∇	42	1007468	(00000000-)	Fan, Vacuum, 5.7d, 024vdc, 3 Stage [B]	1
▲	43	1073334	(00000000-)	Brush, Carbon, Motor, Ele [1pick=1pkg] (1pkg=2 brushes)	1
	44	626123	(00000000-)	Screw, Hex, M6 X 1.0 X 100, 8.8	3
	45	140016	(00000000-)	Washer, Lock, Split, 0.25, Ss	3
	46	140000	(00000000-)	Washer, Flat, 0.28b 0.62d .04, Ss	6

∇ ASSEMBLY

▲ INCLUDED IN ASSEMBLY

CONTROL CONSOLE GROUP

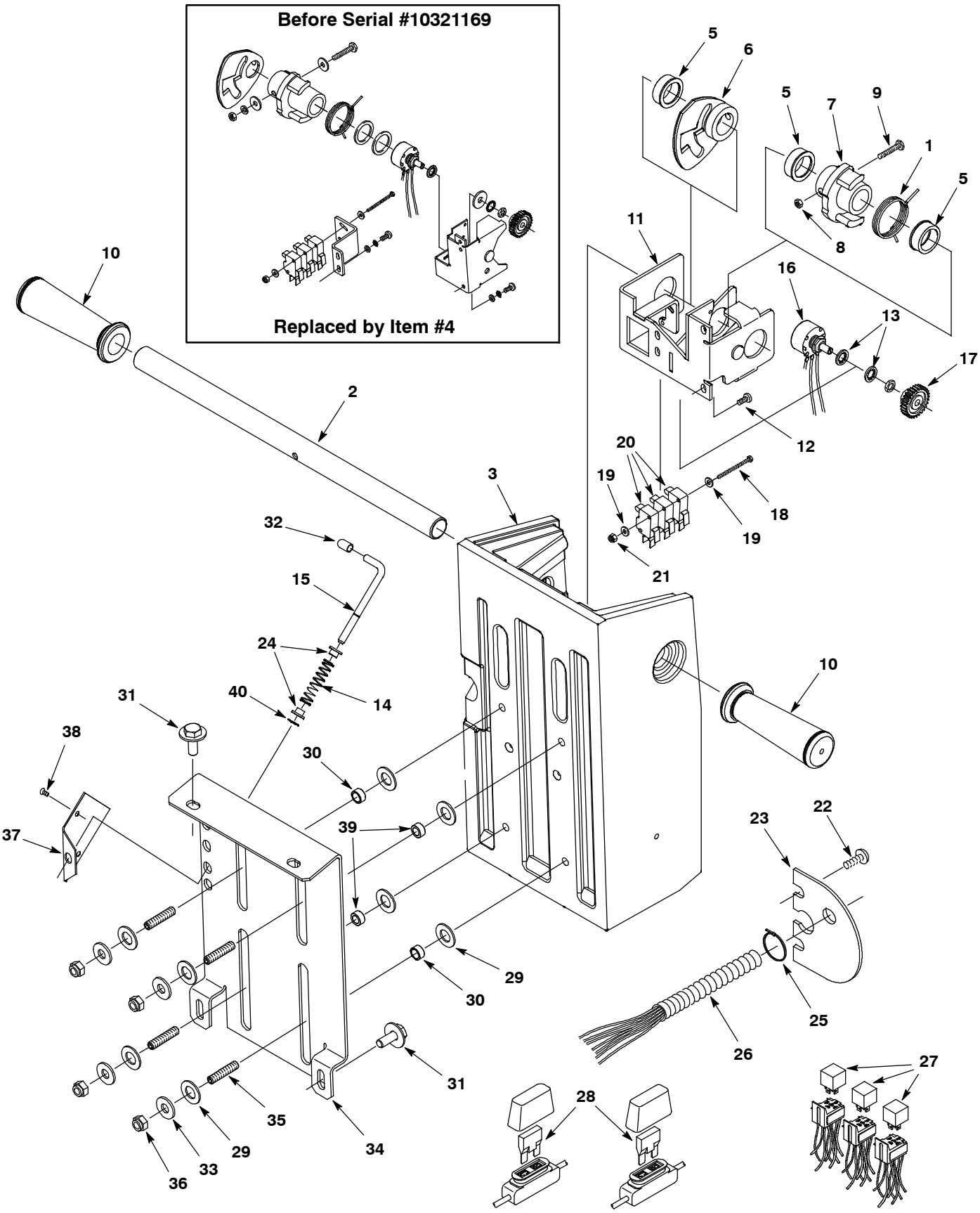

CONTROL CONSOLE GROUP

	Ref.	Part No.	Serial Number	Description	Qty.
	1	630088	(00000000-)	Spring, Tors, Cntr, .072, Pl, Mw	1
	2	630093	(00000000-)	Handle, Bar, .875od X 15.5l	1
	3	610924	(00000000-)	Housing, Cntrl, Rm- Tl, Trimmed (Teal)	1
	3	1024038	(00000000-)	Housing, Cntrl, Rm- Cphg, Trimmed (Gray)	1
∇	4	1036932	(00000000- 10321168)	Bracket Kit, Pot, Console	1
▲	5	1074799	(10810183-)	Bushing, Grip, Throttle [1610]	3
	5	605351	(10321169- 10810182)	Bushing, .88, Blk [10]	3
▲	6	1034750	(10321169-)	Cam, Plate, Switch	1
▲	7	1034754	(10321169-)	Hub Assy, W/ Gear 22.4id, 20.0 Scb	1
▲	8	07785	(00000000-)	Nut, Hex, Std, M6 X 1.00, Ss	1
▲	9	578580	(10321169-)	Screw, Hex, M6 X 1.0 X 35, Pl [Dn933]	1
▲	10	1066506	(00000000-)	Grip, Handle, Rnd	2
▲	11	1034553	(10321169-)	Brkt, Pot, Console	1
▲	12	607006	(00000000-)	Screw, Trs, M4 X 0.70 X 12, Phl, Pl	4
▲	13	32988	(00000000-)	Washer, Lock, Int, 0.38	2
	14	630082	(00000000-)	Spring, Cmpr, 0.42od .04wir 01.8l, Pl,Mw	1
	15	630081	(00000000-)	Lever, Latch, Console Adjust	1
	16	613398	(00000000-)	Potentiometer Assy	1
	17	1026373	(00000000-)	Gear, Spur, 28tooth 01.2pd 24pitch 0.3b	1
	18	600392	(00000000-)	Screw, Hex, M3 X 0.5 X 40	2
	19	601127000	(00000000-)	Washer, Flat, M3.7b X 8d X .5, Pl	4
	20	611005	(00000000-)	Switch, Rlr, 16a, Micro	3
	21	579211	(00000000-)	Nut, Hex, Lock, M3 X 0.50, Ss	2
	22	1019349	(00000000-)	Screw, Trs, M6 X 1.00 X 16, Ss, Sems	2
	23	605067	(00000000-)	Retainer, Harness, Wire	1
	24	630083	(00000000-)	Bushing, Latch	2
	25	130773	(00000000-)	Tie, Cable, Nyl, 11.0l, .14w, 3.0 Max. D	4
∇	26	1024872	(10243221-)	Harness, Main, 24vdc [Str, Sol Off]	1
▲	27	49309	(00000000-)	Relay, 24vdcm 040a, Spdt No	3
▲	28	1036268	(00000000-)	Fuse, 035a 032vdc	2
∇	26	9001641	(00000000- 10243220)	Harness Kit, Wire, Main, 24vdc [Str]	1
▲	27	49309	(00000000-)	Relay, 24vdcm 040a, Spdt No	3
▲	28	1036268	(00000000-)	Fuse, 035a 032vdc	2
	29	608562	(00000000-)	Washer, Flat, 0.51b 0.94d .06, Nyl	8
	30	607783	(00000000-)	Bearing, Sleeve, .31id X .50od X .25,Bnz	2
	31	1020341	(00000000-)	Screw, Hex, M8 X 1.25 X 20, Ss, Sems	4
	32	630094	(00000000-)	Cap, Vinyl, 2.26 Id X 12.7lg, Blk	1
	33	32491	(00000000-)	Washer, Flat, 0.31, Std	4
	34	608563	(00000000-)	Plate, Slide, Console	1
	35	607461	(00000000-)	Screw, Set, M8 X 1.25 X 35, Nl	4
	36	08709	(00000000-)	Nut, Hex, Lock, M8 X 1.25, Nl	4
	37	630087	(00000000-)	Plate, Latch, Retainer	1
	38	630114	(00000000-)	Screw, Flt, M4 X 0.7 X 8, 4.8	2
	39	630259	(00000000-)	Bearing, 9.5id 12.7od 6.4l,Brz	2
	40	630084	(00000000-)	Ring, Retaining, Ext, 4.62mm, [E- Ring]	1

∇ ASSEMBLY

▲ INCLUDED IN ASSEMBLY

COMPONENT PANEL GROUP

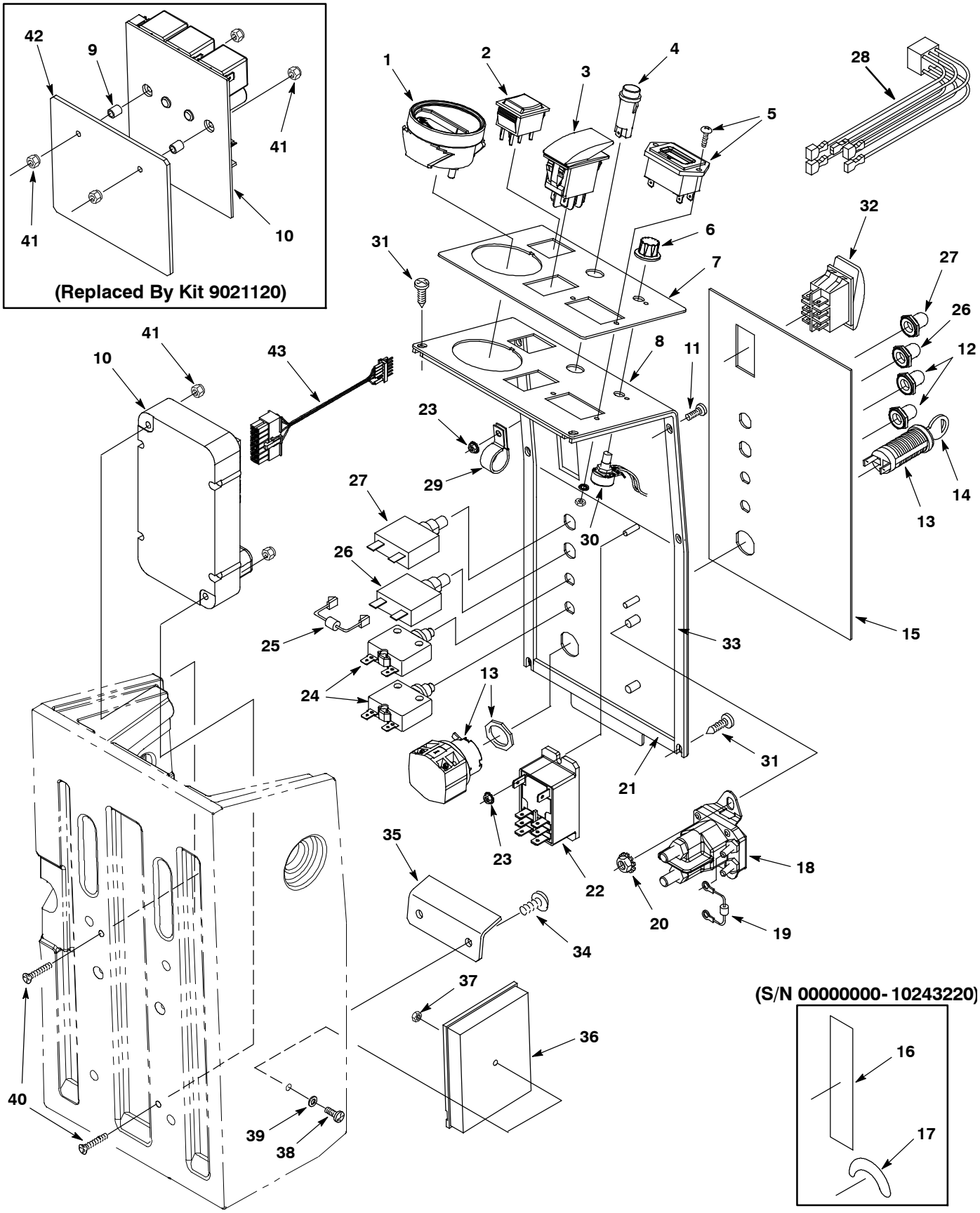

COMPONENT PANEL GROUP

	Ref.	Part No.	Serial Number	Description	Qty.
	1	1013300	(00000000-)	Gauge, Press, Brush	1
	2	1007012	(00000000-)	Switch, Rocker, Dpdt, Mom / Off / Mom	1
	3	602919	(00000000-)	Switch, Rocker, Dpdt, On / On	1
	4	130738	(00000000-)	Light, Indicator, 28vdc, Green	1
	5	603076	(00000000-)	Gauge, Discharge, Battery, 24vdc [Digit]	1
	6	630265	(00000000-)	Knob, Rnd, 0.75d 0.50l 0.25b, Plstc	1
	7	1013306	(00000000-)	Label, Dash, Main	1
	8	1024803	(10243221-)	Panel, Console, Soltn Off [Str]	1
	8	1012689	(00000000- 10243220)	Panel, Console	1
	9	610943	(00000000- 10988797)	Sleeve, P/M, 0.21b 0.32d 0.4l, Stl Pl	2
	10	1253706	(10988798-)	Controller, Propel, 24vdc [I- Drive]	1
	10	630104	(00000000- 10988797)	Control, Spd, 55a [Pmb] (Replaced By Kit 9021120)	1
	11	607006	(00000000-)	Screw, Trs, M4 X 0.70 X 12, Phl, Pl	4
	12	130761	(00000000-)	Boot, Dome, Silicone, .40id .72l .38- 27	2
∇	13	130785	(00000000-)	Switch, Key, 150vac 16a	1
▲	14	607821	(00000000-)	Key, Stl, Replmt	1
	15	1025014	(10243221-)	Label, Panl, Console, Str	1
	16	1013304	(00000000- 10243220)	Label, Circuitbreaker	1
	17	604793	(00000000- 10243220)	Label, Keyswitch On(1) / Off(0)	1
	18	603008	(00000000-)	Relay, 24vdc, 100a, No [Trombett]	1
	19	606404	(00000000-)	Diode, Assy W/ Ring Terminals	1
	20	1007108	(00000000-)	Nut, Hex, Lock, M6 X 1.00, Kep, Ext	2
	21	630453	(00000000-)	Gasket, 143mm, Fr Console, Panl	2
	22	1013270	(00000000-)	Relay, 24vdc, 020a [2pdt]	1
	23	1007109	(00000000-)	Nut, Hex, Lock, M4 X 0.70, Kep, Ext	3
	24	1006477	(00000000-)	Circuitbreaker, 17.0a	2
	25	607394	(00000000-)	Diode, .25 Piggyback Term	1
	26	383723	(00000000-)	Circuitbreaker, 20.0a, Resetable (Includes Boot)	1
	27	383721	(00000000-)	Circuitbreaker, 10.0a (Includes Boot)	1
	28	9001951	(00000000-)	Relay Assy, Interrupter, Low Voltage	1
	29	606727	(00000000-)	Clamp, Cable, Stl, 0.62d X 0.38w, 1hole	1
	30	613682	(00000000-)	Potentiometer [0- 20k Spd C]	1
	31	1009324	(00000000-)	Screw, Pan, #10- 16 X 0.50,Phl,Blk[Ty- 17]	4
	32	601107	(00000000-)	Switch, Rocker [Lighted]	1
	33	630119	(00000000-)	Gasket, Console 3.1x8.0x420	2
	34	1019349	(00000000-)	Screw, Trs, M6 X 1.00 X 16, Ss, Sems	2
	35	630086	(00000000-)	Plate, Strain- Relief, 11ga, Plt	1
	36	1016710	(00000000-)	Module, Timer, Dual 24vdc	1
	37	33932	(00000000-)	Nut, Hex, Lock, M4 X 0.70, Nl, Ss	1
	38	200070354	(00000000-)	Screw, Pan, M4 X 0.7 X 30, Pl	1
	39	605258	(00000000-)	Washer, .374 X .172 X .049, Pl	1
	40	630304	(00000000-)	Screw, Flt, M4 X 0.7 X 35, 4.8	2
	41	02850	(10988798-)	Nut, Hex, Lock, M4 X 0.70, Nl	2
	41	02850	(00000000- 10988797)	Nut, Hex, Lock, M4 X 0.70, Nl	4
	42	630128	(00000000- 10988797)	Heatsink, 11ga Alm, 104 X 120	1
	43	1253645	(10988798-)	Adapter Harness,Propel,Strive&5x00&1620	1

∇ ASSEMBLY

▲ INCLUDED IN ASSEMBLY

WHEEL GROUP (S/N 10492843-)

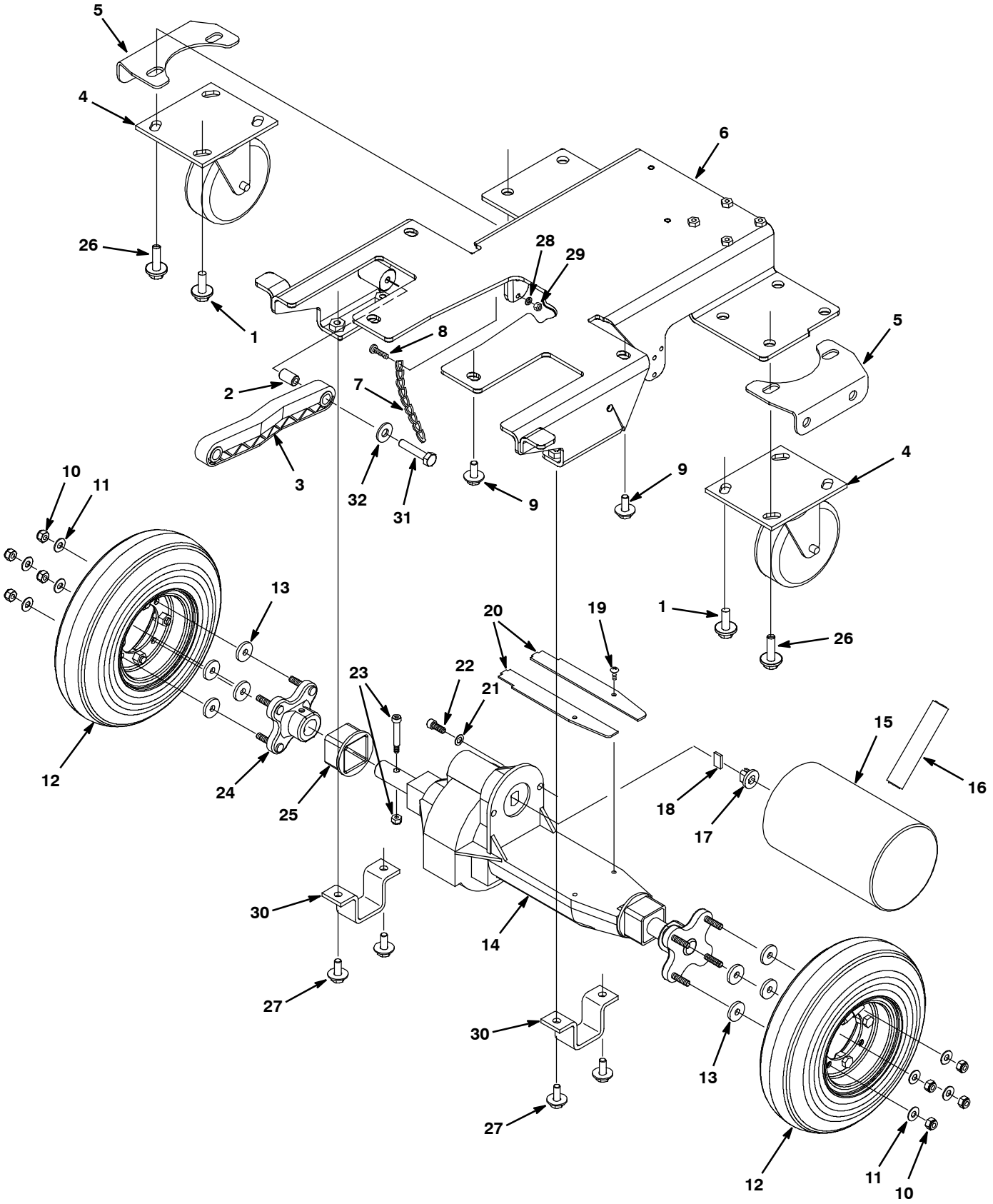

WHEEL GROUP (S/N 10492843-)

	Ref.	Part No.	Serial Number	Description	Qty.
	1	1072628	(00000000-)	Screw, Hex, M8 X 1.25 X 25, Ss, Sems	4
	2	606056	(00000000-)	Tube, 0.32id 0.62od 01.0l, Stl, Pl	2
	3	222027	(00000000-)	Arm, Lift, Head [5700]	2
	4	1049048	(00000000-)	Caster, Swivel, 4.0d 1.4w, 4hole [400lb]	2
	5	1009805	(00000000-)	Bracket, Tie- Down, Caster	2
	6	1062687	(10492843-)	Frame Wldt, Main [1610]	1
	7	1017986	(10314332-)	Chain, Static, 143mml	1
	8	24265	(00000000-)	Screw, Pan, Phl, M4 X 0.70 X 16, Ss	1
	9	1020341	(00000000-)	Screw, Hex, M8 X 1.25 X 20, Ss, Sems	4
	10	41169	(00000000-)	Nut, Hex, Lock, .25- 20, Nl, Ss	8
	11	140000	(00000000-)	Washer, Flat, 0.28b 0.62d .04, Ss	8
	12	1068472	(10492843-)	Tire Assy, Foam, Hi- Dns, Grey,2.8/2.5- 04	2
	13	140053	(00000000-)	Washer, Flat, 0.28b 0.88d .12, Ss	8
∇		1056000	(10440493-)	Transaxle, 24vdc, 116rpm	1
▲	14	612873	(00000000-)	Transaxle, Replmt [Body Only]	1
▲∇	15	614165	(00000000-)	Motor Kit, 24vdc,Replmt[1013312 Trnsaxl]	1
▲▲	16	614166	(00000000-)	Brush Kit, Carbon [Qty 4]	1
▲▲	17	612874	(00000000-)	Coupling, Transaxle, Replmt	1
▲▲	18	612875	(00000000-)	Key, Spcl, Transaxle Replmt	1
▲▲	19	577031000	(00000000-)	Screw, Pan, #08- 32 X 0.50, Phl, Pl	2
▲▲	20	NA	(00000000-)	Cover, Shaft	2
▲▲	21	32982	(00000000-)	Washer, Lock, Int, 0.25	2
▲▲	22	140868	(00000000-)	Screw, Soc, .25- 20 X 0.62 [Bo]	2
▲	23	1043275	(00000000-)	Bolt Kit, Transaxle [Pick 2screws,2nuts] (Replaced By 1063591)	1
▲	24	612879	(00000000-)	Hub, Wheel, Transaxle Replmt (Replaced By 1063591)	2
▲	25	612880	(00000000-)	Sleeve, Transaxle, Replmt	2
	26	1072816	(00000000-)	Screw, Hex, M8 X 1.25 X 30, Ss, Sems	4
	27	1020341	(00000000-)	Screw, Hex, M8 X 1.25 X 20, Ss, Sems	4
	28	200301014	(10314332-)	Washer, Flat, M4.3b X 10.1d X 1, Pl	1
	29	02850	(10314332-)	Nut, Hex, Lock, M4 X 0.70, Nl	1
	30	606001	(00000000-)	Bracket, Transaxle, Mtg, Yel Pl	2
	31	74440	(10492843-)	Screw, Hex, M8 X 1.25 X 40, Nl, Ss	2
	32	32491	(00000000-)	Washer, Flat, 0.31, Std	2
	N/S	130041	(00000000-)	Tie, Cable, Nyl, 11.5l .19w	2

∇ ASSEMBLY

▲ INCLUDED IN ASSEMBLY

WHEEL GROUP (S/N 00000000- 10492842)

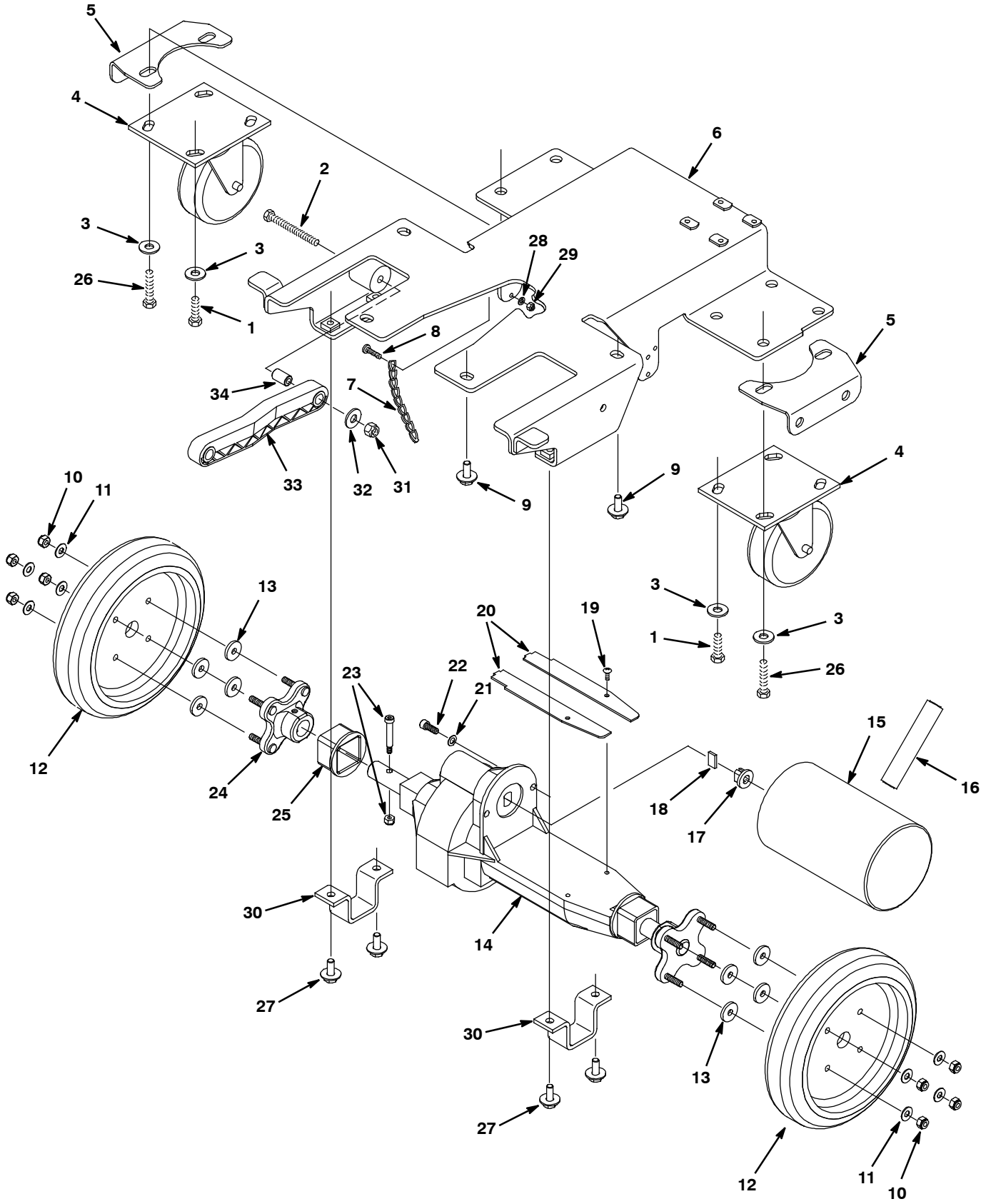

WHEEL GROUP (S/N 00000000- 10492842)

	Ref.	Part No.	Serial Number	Description	Qty.
	1	1015852	(00000000-)	Screw, Hex, M8 X 1.25 X 25, Nl, Fl, Ss	4
	2	575544000	(00000000- 10492842)	Screw, Hex, M8 X 1.25 X 80, Pl, Fl, 8.8	2
	3	01685	(00000000-)	Washer, Flat, 0.38b 0.88d .08, Ss	8
	4	1049048	(00000000-)	Caster, Swivel, 4.0d 1.4w, 4hole [400lb]	2
	5	1009805	(00000000-)	Bracket, Tie- Down, Caster	2
	6	1002360	(00000000- 10492842)	Frame, Transaxle [5400x] (Replaced By 1062687)	1
	7	1017986	(10314332-)	Chain, Static, 143mml	1
	8	24265	(00000000-)	Screw, Pan, Phl, M4 X 0.70 X 16, Ss	1
	9	1020341	(00000000-)	Screw, Hex, M8 X 1.25 X 20, Ss, Sems	4
	10	41169	(00000000-)	Nut, Hex, Lock, .25- 20, Nl, Ss	8
	11	140000	(00000000-)	Washer, Flat, 0.28b 0.62d .04, Ss	8
	12	607452	(00000000- 10492842)	Wheel, 08.0d 2.00w Tpr	2
	13	140053	(00000000-)	Washer, Flat, 0.28b 0.88d .12, Ss	8
∇		1056000	(10440493-)	Transaxle, 24vdc, 116rpm	1
∇		1013312	(00000000- 10440492)	Transaxle, 24vdc Motor, 116 Rpm (Replaced By 1056000)	1
▲	14	612873	(00000000-)	Transaxle, Replmt [Body Only]	1
▲∇	15	614165	(00000000-)	Motor Kit, 24vdc,Replmt[1013312 Trnsaxl]	1
▲▲	16	614166	(00000000-)	Brush Kit, Carbon [Qty 4]	1
▲▲	17	612874	(00000000-)	Coupling, Transaxle, Replmt	1
▲▲	18	612875	(00000000-)	Key, Spcl, Transaxle Replmt	1
▲▲	19	577031000	(00000000-)	Screw, Pan, #08- 32 X 0.50, Phl, Pl	2
▲▲	20	NA	(00000000-)	Cover, Shaft	2
▲▲	21	32982	(00000000-)	Washer, Lock, Int, 0.25	2
▲▲	22	140868	(00000000-)	Screw, Soc, .25- 20 X 0.62 [Bo]	2
▲	23	1043275	(00000000-)	Bolt Kit, Transaxle [Pick 2screws,2nuts]	1
▲	24	612879	(00000000-)	Hub, Wheel, Transaxle Replmt	2
▲	25	612880	(00000000-)	Sleeve, Transaxle, Replmt	2
	26	1016399	(00000000-)	Screw, Hex, M8 X 1.25 X 30, Nl, Ss	4
	27	1020341	(00000000-)	Screw, Hex, M8 X 1.25 X 20, Ss, Sems	4
	28	200301014	(10314332-)	Washer, Flat, M4.3b X 10.1d X 1, Pl	1
	29	02850	(10314332-)	Nut, Hex, Lock, M4 X 0.70, Nl	1
	30	606001	(00000000-)	Bracket, Transaxle, Mtg, Yel Pl	2
	31	08709	(00000000- 10492842)	Nut, Hex, Lock, M8 X 1.25, Nl	2
	32	32491	(00000000-)	Washer, Flat, 0.31, Std	2
	33	222027	(00000000-)	Arm, Lift, Head [5700]	2
	34	606056	(00000000-)	Tube, 0.32id 0.62od 01.0l, Stl, Pl	2
	N/S	130041	(00000000-)	Tie, Cable, Nyl, 11.5l .19w	2

∇ ASSEMBLY

▲ INCLUDED IN ASSEMBLY

SCRUB HEAD GROUP

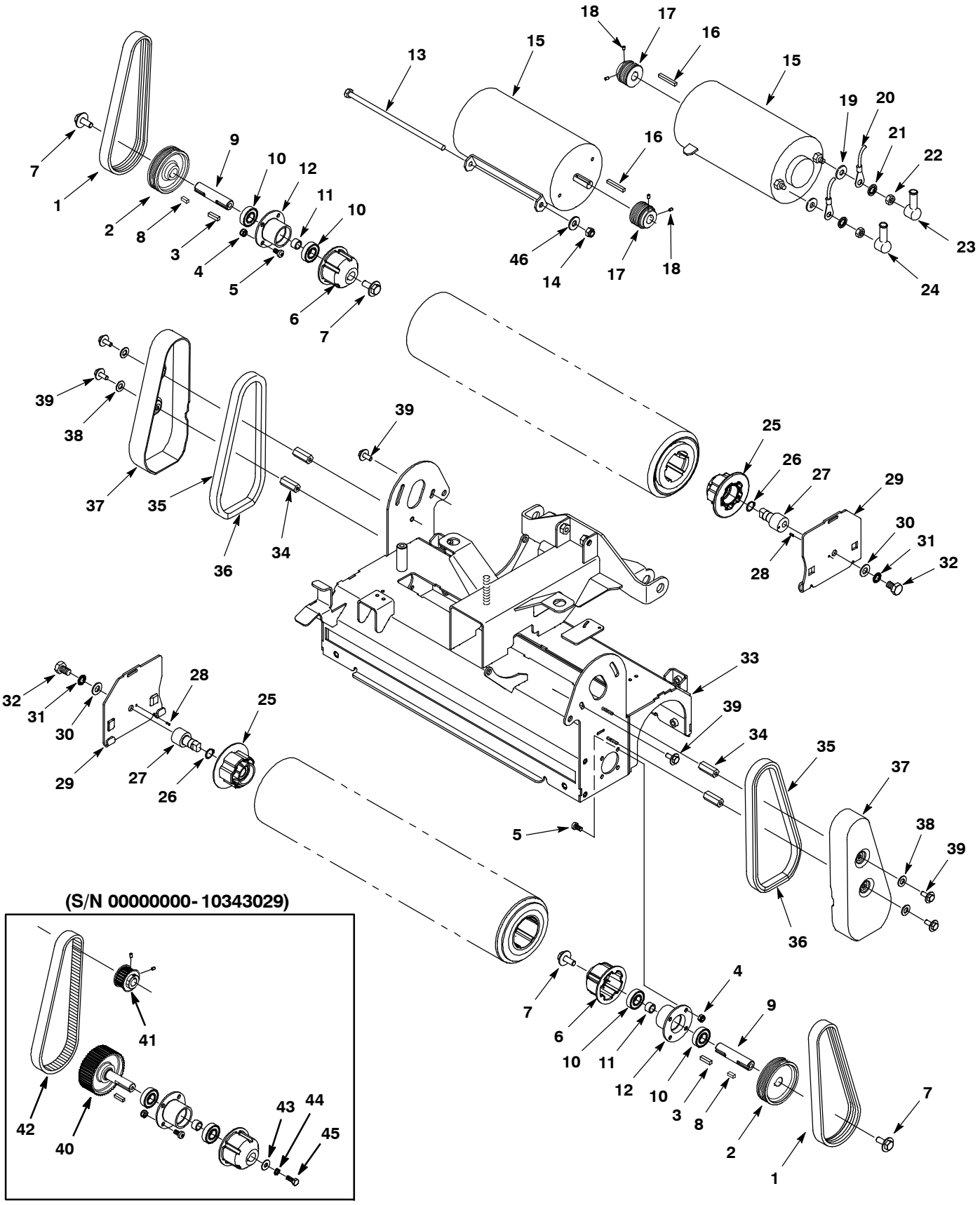

SCRUB HEAD GROUP

	Ref.	Part No.	Serial Number	Description	Qty.
	1	1035888	(10343030-)	Belt, Drive, 6Grv, 508l X 14w, [6Pj]	2
	2	1035173	(10343030-)	Sheave, 06Grv, 2.96pd, 0.59b, Alm [Pj]	2
	3	00911	(00000000-)	Key, Sq, 0.19 X 0.19, 0.75l	2
	4	08712	(00000000-)	Nut, Hex, Lock, M6 X 1.00, Ss, Nl	8
	5	363503	(00000000-)	Screw, Pan, M6 X 1.0 X 12, Ss	8
	6	378805	(00000000-)	Plug, Drive, Brush, Mach	2
	7	1020341	(00000000-)	Screw, Hex, M8 X 1.25 X 20, Sems, Ss	4
	8	00961	(10343030-)	Key, Sq, 0.19 X 0.19, 0.50l	2
	9	1021050	(10343030-)	Shaft, Drive	2
	10	41360	(00000000-)	Bearing, Ball, 0.59b 1.26d 0.35w[2seal]	4
	11	1002077	(00000000-)	Tube, 0.59id 0.81od 00.5l	2
	12	1001792	(00000000-)	Housing, Brg	2
	13	1019942	(00000000-)	Screw, Hex, M8 X 1.25 X 210, 8.8	2
	14	08713	(00000000-)	Nut, Hex, Lock, M8 X 1.25, Nl, Ss	2
∇	15	1042232	(10409692-)	Motor, 24vdc 0750rpm 0.70hp 14a	2
▲		1049739	(10409692-)	Brush Kit, Carbon, Motor, Replmt [4pcs]	1
▲	16	00954	(00000000-)	Key, Sq, 0.12 X 0.12, 1.00l	1
∇	15	1017216	(00000000- 10409691)	Motor, 24vdc 750rpm 0.7hp 14a (Replaced By 1042232)	2
▲		190152	(00000000- 10409691)	Brush, Carbon [Pk=4]	1
	17	1033528	(10343030-)	Sheave, 06Grv, 1.33pd, 0.50b, Alm [Pj]	2
	18	222818	(00000000-)	Screw, Set, #08- 32 X 0.25, Nl	4
	19	140027	(00000000-)	Washer, Flat, 0.35b 0.75d .04, Ss	4
	20	606795	(00000000-)	Harness, Motor, Cyl Brush	2
	21	43952	(00000000-)	Washer, Lock, Int, 0.31, Ss	4
	22	07786	(00000000-)	Nut, Hex, Std, M8 X 1.25, Ss	4
	23	608964	(00000000-)	Boot, 90deg .27id 0.64id 1.79l, Blk	2
	24	608963	(00000000-)	Boot, 90deg .27id 0.64id 1.79l, Red	2
∇		222752	(00000000-)	Plug Assy, Idler, Brush	2
▲	25	1057629	(00000000-)	Plug, Idler, Brush [Sgl Brg]	1
▲	26	01516	(00000000-)	Ring, Retaining, Ext, 0.59d, Basic	1
▲	27	222177	(00000000-)	Shaft, Plug, Idler	1
▲	28	222184	(00000000-)	Pin, Roll, .094d X 0.25l, .094/.097	1
	29	1011197	(00000000-)	Door, Rlr	2
	30	32485	(00000000-)	Washer, Flat, 0.38, Sae	2
	31	43953	(00000000-)	Washer, Lock, Int, 0.38, Ss	2
	32	140276	(00000000-)	Screw, Hex, M10 X 1.5 X 16, Ss	2
	33	1017420	(00000000-)	Housing Wldt	1
	34	1002078	(00000000-)	Spacer, 0.50hex X 1.25l, M6 Thread	4
	35	1008675	(00000000-)	Gasket, Edge, Foam, 24.00l [Fr]	2
	36	630453	(00000000-)	Gasket, 143mm, Fr Console, Panl	2
	37	1012951	(00000000-)	Cover, Belt, Trimmed	2
	38	140000	(00000000-)	Washer, Flat, 0.28b 0.62d .04, Ss	4
	39	1034731	(00000000-)	Screw, Hex, M6 X 1.00 X 16, Sems, Ss	8
	40	1006713	(00000000- 10343029)	Sprocket, Cast, 48tooth, 5pitch (Replaced By 9008825)	2
	41	375195	(00000000- 10343029)	Sprocket, Timing, 22tooth, 0.50b, [Gt/2]	2
	42	377500	(00000000- 10343029)	Belt, Synchronous, 05mm 500l[05p,Plychn]	2
	43	01684	(00000000- 10343029)	Washer, Flat, 0.27b 0.69d .05, Ss	2
	44	07515	(00000000- 10343029)	Washer, Lock, Int, 0.25, Ss	2
	45	15678	(00000000- 10343029)	Screw, Hex, M6 X 1.0 X 16, Ss	2
	46	01685	(00000000-)	Washer, Flat, 0.38b 0.88d .08, Ss	2

∇ ASSEMBLY

▲ INCLUDED IN ASSEMBLY

SCRUB HEAD GROUP - CONT'D

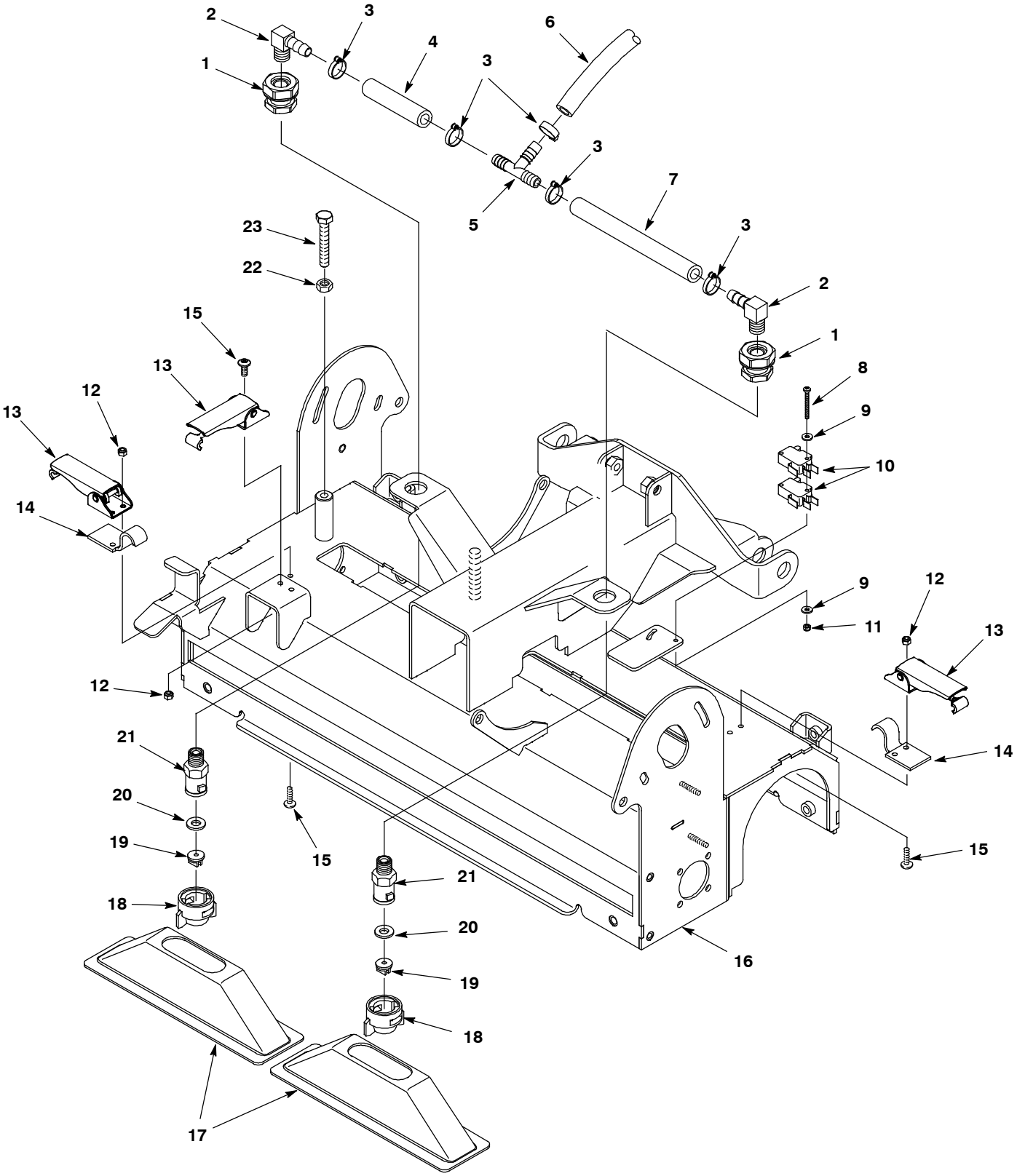

SCRUB HEAD GROUP - CONT'D

Ref.	Part No.	Serial Number	Description	Qty.
1	78122	(00000000-)	Fitting, Brs, Str, Pf04/Pf04, Bh	2
2	150419	(00000000-)	Fitting, Brs, E90, Bm06/Pm04 [Taped]	2
3	140301	(00000000-)	Clamp, Hose, Ear, 0.62d	5
4	613473	(00000000-)	Hose, Pvc, Brd, 0.38id 0.62od 02.5l,Gray	.20ft
5	160310	(00000000-)	Fitting, Plstc, Tee, Bm06/Bm06/Bm06	1
6	613495	(10314332-)	Hose, Pvc, Brd, 0.38id 0.62od 40.0l,Gray	3.3ft
6	613488	(00000000- 10314331)	Hose, Pvc, Brd, 0.38id 0.62od 24.0l,Gray	2.0ft
7	613478	(00000000-)	Hose, Pvc, Brd, 0.38id 0.62od 07.0l,Gray	.50ft
8	06924	(00000000-)	Screw, Pan, M3 X 0.50 X 30, 4.8	2
9	41578	(00000000-)	Washer, Flat, #06, Ss	4
10	611005	(00000000-)	Switch, Rlr, 16a, Micro	2
11	579211	(00000000-)	Nut, Hex, Lock, M3 X 0.50, Ss	2
12	33932	(00000000-)	Nut, Hex, Lock, M4 X 0.70, Nl, Ss	6
13	1006086	(00000000-)	Latch [Over- Center]	3
14	1017780	(00000000-)	Clip, Hanger, Hose, .17d, 2hole	2
15	579237	(00000000-)	Screw, Pan, M4 X 0.7 X 12, Phl, Ss	6
16	1017420	(00000000-)	Housing Wldt	1
17	1012645	(00000000-)	Shroud, Splash	2
18	575282000	(00000000-)	Fitting, Cap [Q- Jet]	2
19	575283000	(00000000-)	Fitting, Brs, Tip [11002, T- Jet]	2
20	575276000	(00000000-)	Fitting, Gasket [Quick- Jet]	2
21	575281000	(00000000-)	Fitting, Spray, Body [Quick- Jet]	2
22	07786	(00000000-)	Nut, Hex, Std, M8 X 1.25, Ss	2
23	578717	(00000000-)	Screw, Hex, M8 X 1.25 X 50, Ss, Fl	2

SCRUB HEAD LIFT GROUP

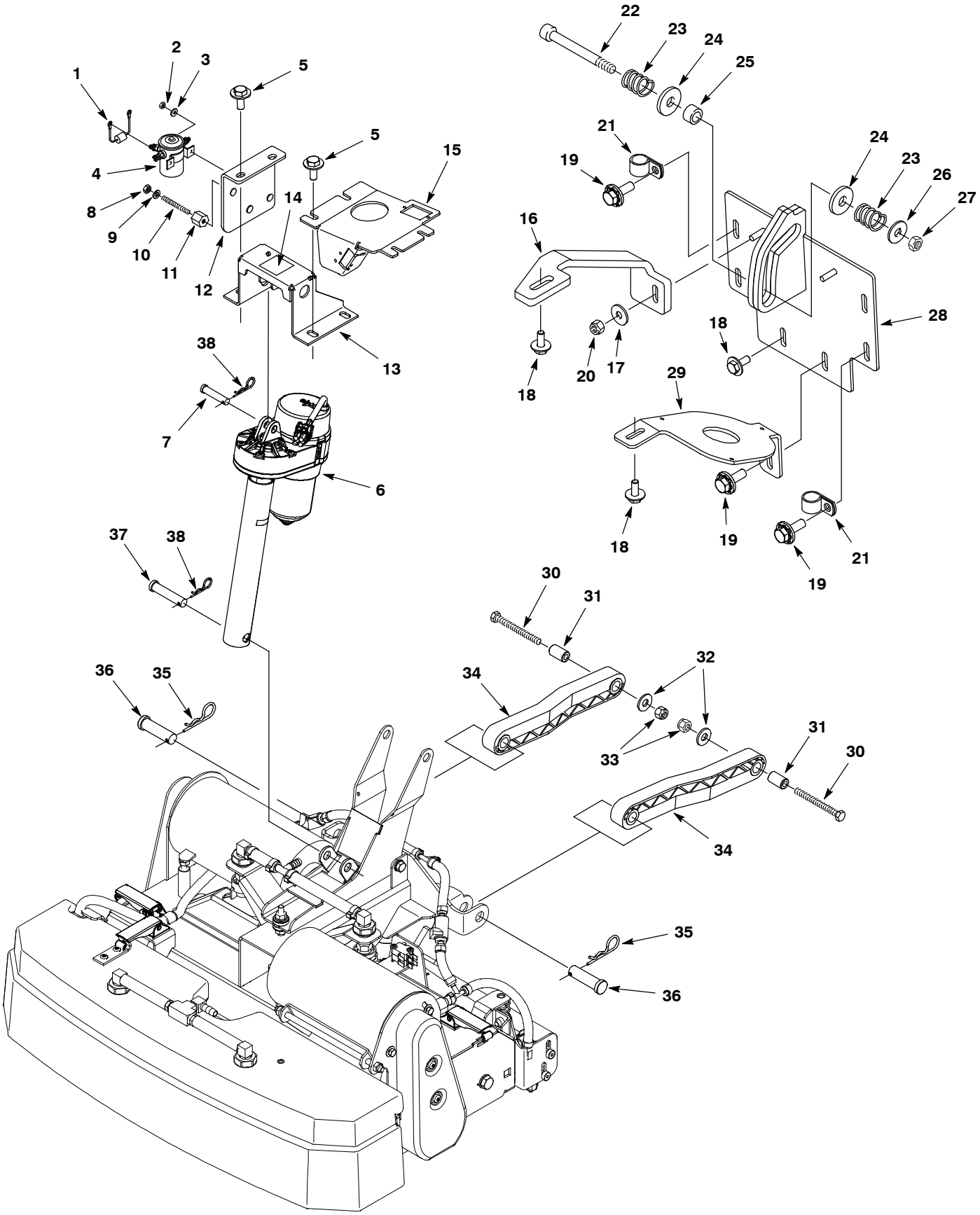

SCRUB HEAD LIFT GROUP

Ref.	Part No.	Serial Number	Description	Qty.
1	606404	(00000000-)	Diode, Assy W/ Ring Terminals	1
2	08708	(00000000-)	Nut, Hex, Lock, M6 X 1.00, Nl	2
3	32490	(00000000-)	Washer, Flat, 0.25, Std	2
4	605905	(00000000-)	Solenoid, 24vdc 125a 050ohm	1
5	1020341	(00000000-)	Screw, Hex, M8 X 1.25 X 20, Ss, Sems	4
6	1050454	(00000000-)	Actuator, 24vdc, 02.8strk, 0600lb	1
7	29558	(00000000-)	Pin, Clevis, 0.37d X 1.50l	1
8	32520	(00000000-)	Nut, Hex, Jam, .25- 20	1
9	140016	(00000000-)	Washer, Lock, Split, 0.25, Ss	1
10	41702	(00000000-)	Rod, Thrd, Full, .25- 20 01.5l	1
11	76062	(00000000-)	Stand- Off, Wir, M6, Insulator, Panel	1
12	606523	(00000000-)	Bracket, Contactor	1
13	1010154	(00000000-)	Bracket, Mtg, Actuator	1
14	606521	(00000000-)	Label, Gen Hzrd	1
15	1014611	(00000000-)	Bracket, Hose, Vacuum, Soltn Tank	1
16	611049	(00000000-)	Bracket, Sppt, Rh	1
17	01685	(00000000-)	Washer, Flat, 0.38b 0.88d .08, Ss	1
18	1020341	(00000000-)	Screw, Hex, M8 X 1.25 X 20, Ss, Sems	5
19	1072628	(00000000-)	Screw, Hex, M8 X 1.25 X 25, Ss, Sems	3
20	08709	(00000000-)	Nut, Hex, Lock, M8 X 1.25, Nl	1
21	140314	(00000000-)	Clamp, Cable, Stl, 0.75d X 0.75w, 1hole	2
22	1006263	(00000000-)	Bolt, Shld, .50d X 3.25, .38- 16, Pl	1
23	607920	(00000000-)	Spring, Cmpr, 0.70od 1.0wir 01.0l, Mw	2
24	607568	(00000000-)	Washer, P/M, 1.500d, 0.500b 0.25l Bnz	2
25	608198	(00000000-)	Roller, Linkage, Scb Head	1
26	140046	(00000000-)	Washer 1.00x.392x.090 Ss	1
27	59156	(00000000-)	Nut, Hex, Lock, .38- 16, Nl, Ss	1
28	608199	(00000000-)	Bracket, Rlr, Head Lift	1
29	1013122	(00000000-)	Bracket, Motor, Vacuum [2nd]	1
30	575544000	(00000000-)	Screw, Hex, M8 X 1.25 X 80, Pl, Fl, 8.8	2
31	606056	(00000000-)	Tube, 0.32id 0.62od 01.0l, Stl, Pl	2
32	32491	(00000000-)	Washer, Flat, 0.31, Std	2
33	08709	(00000000-)	Nut, Hex, Lock, M8 X 1.25, Nl	2
34	222027	(00000000-)	Arm, Lift, Head	2
35	02942	(00000000-)	Pin, Cotter, Hair, 0.62d .120 Wir	2
36	222210	(00000000-)	Pin, Clevis, 0.62d X 2.12l	2
37	11211	(00000000-)	Pin, Clevis, 0.50d X 2.25l	1
38	140626	(00000000-)	Pin, Cotter, Hair, 0.25d .125 Wir	2

READYSPACE VACUUM SHOE AND SOLUTION FLUSH LINE GROUP

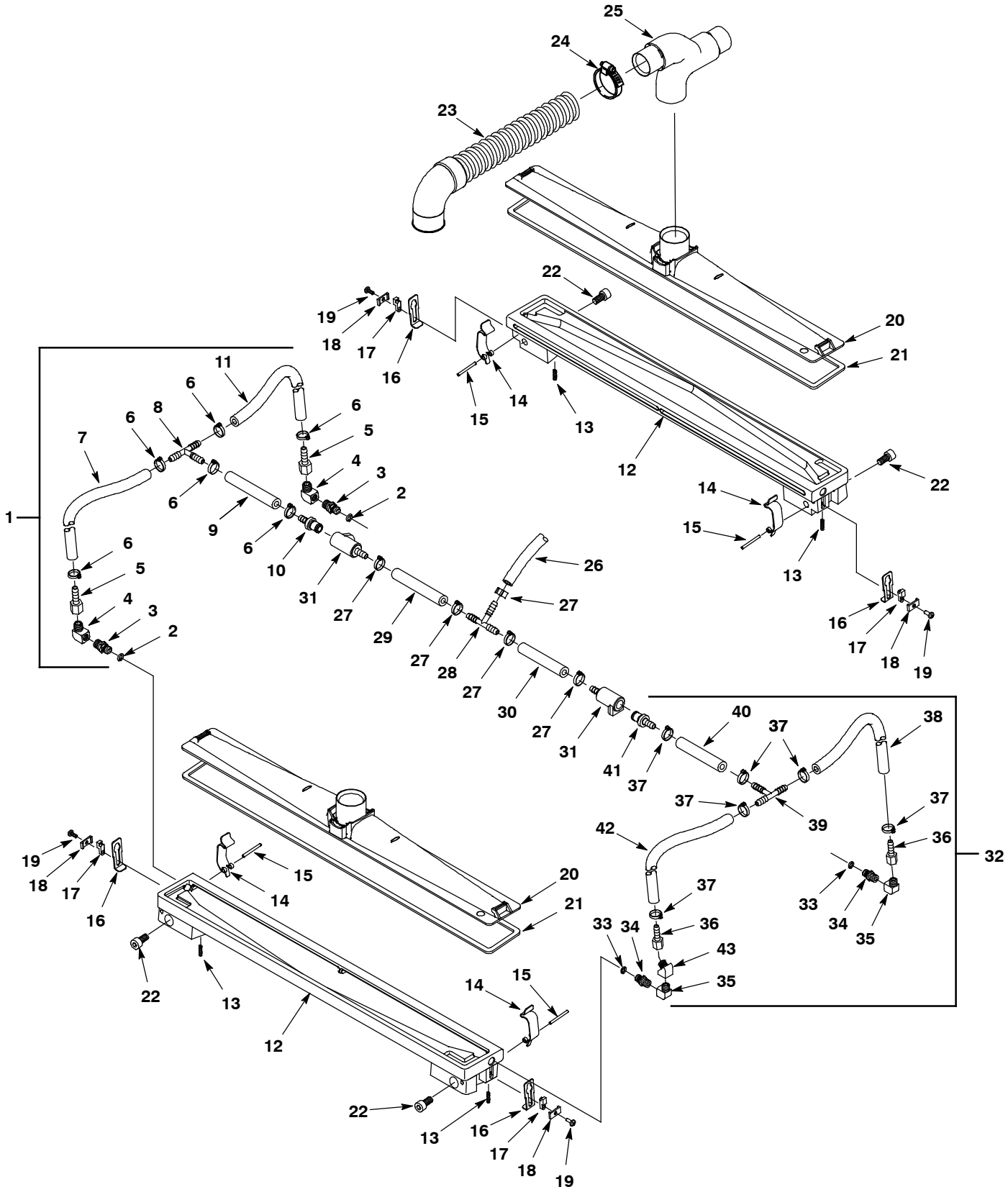

READYSPACE VACUUM SHOE AND SOLUTION FLUSH LINE GROUP

	Ref.	Part No.	Serial Number	Description	Qty.
∇	1	1021845	(00000000-)	Hose Assy, Rh [Readyspace Head]	1
▲	2	1017902	(00000000-)	Seal, Org, .070 X 00.24id, 75d [Viton]	2
▲	3	1017841	(00000000-)	Fitting, Brs, Tip, Spcl [2505 H1/8vv]	2
▲	4	150407	(00000000-)	Fitting, Brs, E90, Pf02/Pm02 [Street]	2
▲	5	150520	(00000000-)	Fitting, Brs, Str, Bm04/Pf02	2
▲	6	140325	(00000000-)	Clamp, Hose, Ear, 0.50d, Ss	6
▲	7	613428	(00000000-)	Hose, Pvc, Brd, 0.25id 0.50od 00.6l,Gray	.50ft
▲	8	150713	(00000000-)	Fitting, Plstc, Tee, Bm04/Bm04/Bm04	1
▲	9	613427	(00000000-)	Hose, Pvc, Brd, 0.25id 0.50od 03.7l,Gray	.15ft
▲	10	1017317	(00000000-)	Fitting, Plstc, Str, Bm04, Cplg, Mal	1
▲	11	606244	(00000000-)	Hose, Pvc, Brd, 0.25id 0.50od 16.0l,Gray	1.3ft
∇		1017375	(00000000-)	Tool Assy, Rlr [Readyspace]	2
▲	12	1017371	(00000000-)	Tool, Vacuum, Str Rlr [Finish Mach'D]	2
▲	13	1017871	(00000000-)	Spring, Cmpr, 0.20od .02wir 00.8l	4
▲	14	1027993	(00000000-)	Clip, Cover, Vacuum	4
▲	15	1029957	(00000000-)	Pin, Roll, .133d X 1.38l, Ss	4
▲	16	1017840	(00000000-)	Latch, Retaining, Nozzle	4
▲	17	1017855	(00000000-)	Key, Timing, Latch	4
▲	18	1017044	(00000000-)	Retainer, Latch	4
▲	19	49697	(00000000-)	Screw, Pan, M4 X 0.7 X 10, Ss	4
▲	20	1013075	(00000000-)	Cover Assy, Tool, Vacuum, Rlr	2
▲	21	1013045	(00000000-)	Gasket, 22.05 X 02.36 X .13, Pyu, Adh	2
	22	49609	(00000000-)	Screw, Soc, M8 X 1.25 X 16, 12.9	4
	23	1014171	(00000000-)	Hose, Vacuum, 1.50id X 011.8l,1- E90 Cuff	1
	24	11531	(00000000-)	Clamp, Hose, Wormdrive, 1.06- 2.00d, .56w	1
	25	1017638	(00000000-)	Fitting Assy, Pvc, Y, F/1.50 Hose	1
	26	613437	(10314332-)	Hose, Pvc, Brd, 0.25id 0.50od 33.0l,Gray	2.7ft
	26	606359	(00000000- 10314331)	Hose, Pvc, Brd, 0.25id 0.50od 08.0l,Gray	.67ft
	27	140325	(00000000-)	Clamp, Hose, Ear, 0.50d, Ss	5
	28	150713	(00000000-)	Fitting, Plstc, Tee, Bm04/Bm04/Bm04	1
	29	613429	(00000000-)	Hose, Pvc, Brd, 0.25id 0.50od 10.0l,Gray	.83ft
	30	607707	(00000000-)	Hose, Pvc, Brd, 0.25id 0.50od 09.5l,Gray	.54ft
	31	1002898	(00000000-)	Fitting, Plstc, Str, Bm04, Cplg, Fem	2
∇	32	1021844	(00000000-)	Hose Assy, Lh [Readyspace Head]	1
▲	33	1017902	(00000000-)	Seal, Org, .070 X 00.24id, 75d [Viton]	2
▲	34	1017841	(00000000-)	Fitting, Brs, Tip, Spcl [2505 H1/8vv]	2
▲	35	150407	(00000000-)	Fitting, Brs, E90, Pf02/Pm02 [Street]	2
▲	36	150520	(00000000-)	Fitting, Brs, Str, Bm04/Pf02	2
▲	37	140325	(00000000-)	Clamp, Hose, Ear, 0.50d, Ss	6
▲	38	607307	(00000000-)	Hose, Pvc, Brd, 0.25id 0.50od 12.0l,Gray	.92ft
▲	39	150713	(00000000-)	Fitting, Plstc, Tee, Bm04/Bm04/Bm04	1
▲	40	613427	(00000000-)	Hose, Pvc, Brd, 0.25id 0.50od 03.7l,Gray	.15ft
▲	41	1017317	(00000000-)	Fitting, Plstc, Str, Bm04, Cplg, Mal	1
▲	42	613427	(00000000-)	Hose, Pvc, Brd, 0.25id 0.50od 03.7l,Gray	.15ft
▲	43	150422	(00000000-)	Fitting, Brs, E45, Pf02/Pm02, Str	1

∇ ASSEMBLY

▲ INCLUDED IN ASSEMBLY

EXTRACTION VACUUM SHOE GROUP

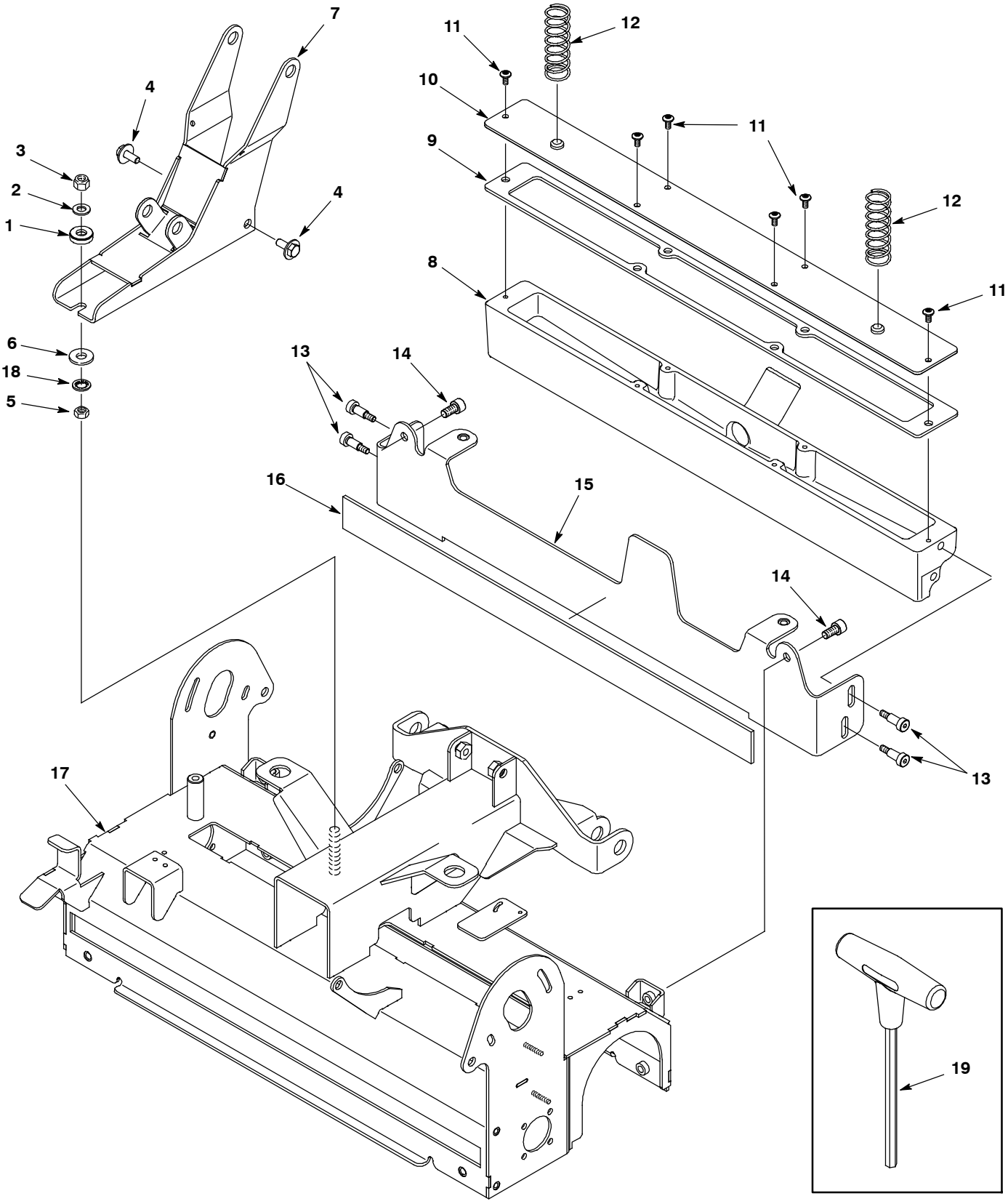

EXTRACTION VACUUM SHOE GROUP

	Ref.	Part No.	Serial Number	Description	Qty.
	1	1006925	(00000000-)	Washer, Spherical, .88od X .41id X .25th	1
	2	140027	(00000000-)	Washer, Flat, 0.35b 0.75d .04, Ss	1
	3	08713	(00000000-)	Nut, Hex, Lock, M8 X 1.25, Nl, Ss	1
	4	1020341	(00000000-)	Screw, Hex, M8 X 1.25 X 20, Ss, Sems	2
	5	07786	(00000000-)	Nut, Hex, Std, M8 X 1.25, Ss	1
	6	01685	(00000000-)	Washer, Flat, 0.38b 0.88d .08, Ss	1
	7	1012711	(00000000-)	Bracket, Mtg, Head	1
∇		1016835	(00000000-)	Tool Assy, Floor [Extractor, Readyspace]	1
▲	8	1013440	(00000000-)	Tool, Pickup, Carpet [Lo- Profile]	1
▲	9	1014090	(00000000-)	Gasket, 23.74 X 01.06 X .12, Pyu, Adh	1
▲	10	1012573	(00000000-)	Plate, Cover, Carpet Tool [Lo- Pro Cast]	1
▲	11	604930	(00000000-)	Screw, Trs, M5 X 0.80 X 10, Phl, Pl, Nl	6
▲	12	1013867	(00000000-)	Spring, Cmpr, 1.00od .09wir 03.0l	2
▲	13	1014128	(00000000-)	Bolt, Shld, 08mmd X 016mm, M06 X 1.0, Ss	4
▲	14	49609	(00000000-)	Screw, Soc, M8 X 1.25 X 16, 12.9	2
▲	15	1016725	(00000000-)	Bracket, Mtg, Floor Tool [Extractor]	1
▲	16	1017007	(00000000-)	Gasket, 22.44 X 01.50 X .13, Neo, Adh	1
	17	1017420	(00000000-)	Housing Wldt	1
	18	43952	(00000000- 10314331)	Washer, Lock, Int, 0.31, Ss	1
	19	1017935	(00000000-)	Handle, Key, Hex [T- Handle]	1

∇ ASSEMBLY

▲ INCLUDED IN ASSEMBLY

BUMPER GROUP

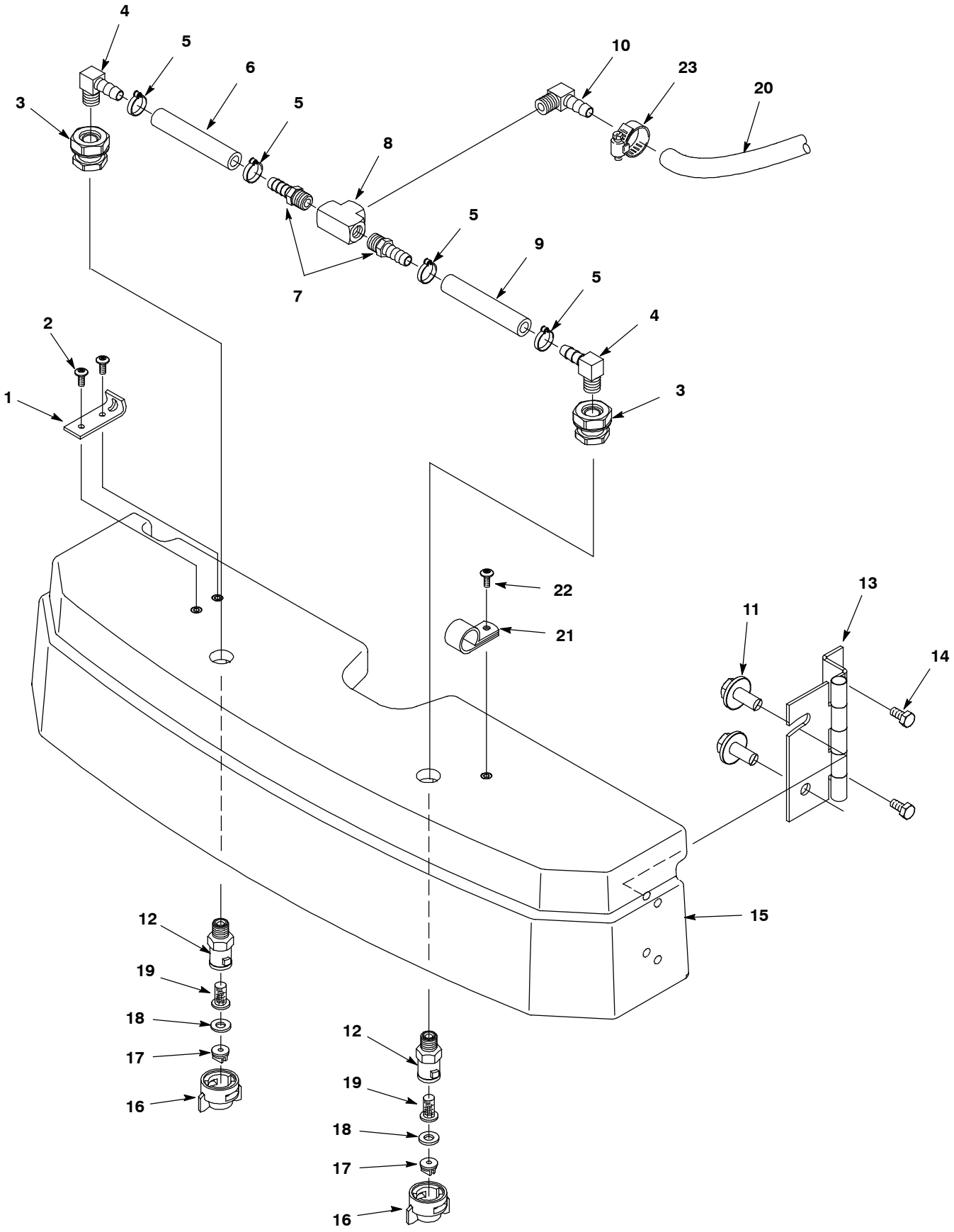

BUMPER GROUP

	Ref.	Part No.	Serial Number	Description	Qty.
∇		1017659	(00000000-)	Bumper Assy [Readyspace]	1
▲	1	1017470	(00000000-)	Bracket, Keeper, Latch, 2 Hole, Yel Pl	1
▲	2	609062	(00000000-)	Screw, Trs, M5 X 0.80 X 12, Phl, Ss	2
▲	3	78122	(00000000-)	Fitting, Brs, Str, Pf04/Pf04, Bh	2
▲	4	150419	(00000000-)	Fitting, Brs, E90, Bm06/Pm04 [Taped]	2
▲	5	140301	(00000000-)	Clamp, Hose, Ear, 0.62d	4
▲	6	607415	(00000000-)	Hose, Pvc, Brd, 0.38id 0.62od 04.0l,Gray	.31ft
▲	7	150516	(00000000-)	Fitting, Brs, Str, Bm06/Pm05	2
▲	8	150706	(00000000-)	Fitting, Brs, Tee, Pf04/Pf04/Pf04	1
▲	9	607415	(00000000-)	Hose, Pvc, Brd, 0.38id 0.62od 04.0l,Gray	.31ft
▲	10	150419	(00000000-)	Fitting, Brs, E90, Bm06/Pm04 [Taped]	1
▲	11	1020341	(00000000-)	Screw, Hex, M8 X 1.25 X 20, Ss, Sems	2
▲	12	575281000	(00000000-)	Fitting, Spray, Body [Quick- Jet]	2
▲	13	1016999	(00000000-)	Hinge, 6mm Pin 2.5 73.5mmw 100mml, Bent	1
▲	14	09744	(00000000-)	Screw, Hex, M6 X 1.0 X 12, Ss	2
▲	15	1028870	(00000000-)	Bumper, Bar, Spray, Rm- Bk [Mdpe]	1
▲	16	1022715	(00000000-)	Cap, White [Quick- Jet]	2
▲	17	1013917	(00000000-)	Fitting, Brs, Tip [11005e]	2
▲	18	575276000	(00000000-)	Fitting, Gasket [Quick- Jet]	2
▲	19	575603	(00000000-)	Filter, Screen, 024 Mesh, Check Valve	2
	20	613503	(10314332-)	Hose, Pvc, Brd, 0.38id 0.62od 75.0l,Gray	6.0ft
	20	613502	(00000000- 10314331)	Hose, Pvc, Brd, 0.38id 0.62od 61.9l,Gray	5.1ft
	21	606727	(00000000-)	Clamp, Cable, Stl, 0.62d X 0.38w, 1hole	1
	22	609062	(00000000-)	Screw, Trs, M5 X 0.80 X 12, Phl, Ss	1
	23	54333	(00000000-)	Clamp, Hose, Wormdrive, 0.31- 0.88d, .31w	1

∇ ASSEMBLY

▲ INCLUDED IN ASSEMBLY

SOLUTION GROUP (S/N 10314332-)

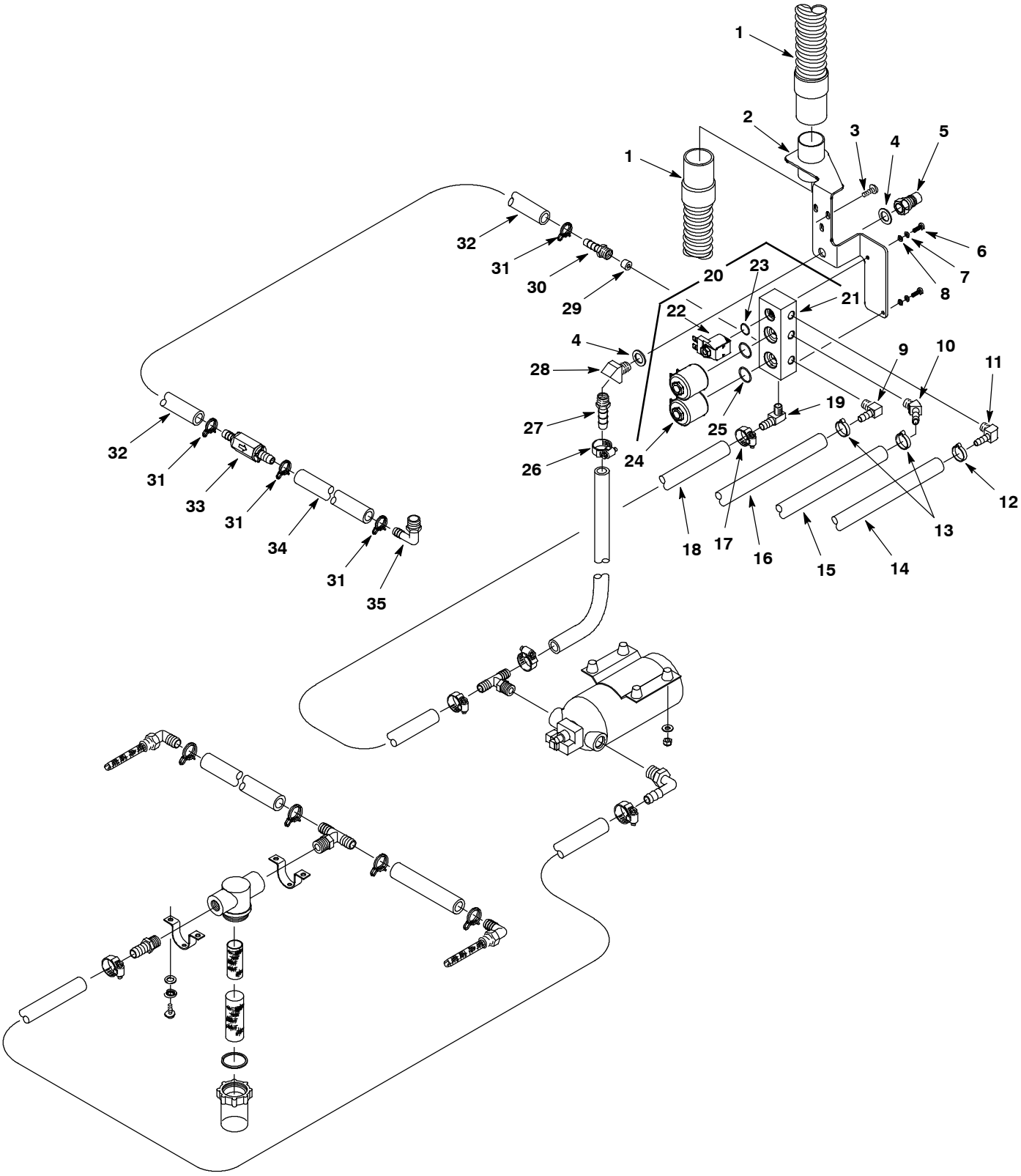

SOLUTION GROUP (S/N 10314332-)

	Ref.	Part No.	Serial Number	Description	Qty.
	1	613759	(00000000-)	Hose, Vacuum, 1.50id X 034.0l, 2cuff,Clr	2
	2	1030215	(10314332-)	Bracket, Hose, Vac, Manifold	1
	3	1019349	(00000000-)	Screw, Trs, M6 X 1.00 X 16, Ss, Sems	3
	4	140008	(00000000-)	Washer, Flat, 0.57b 1.28d .08, Ss	2
	5	150933	(00000000-)	Fitting, Brs, Qdc, Pm04 [Ser60]	1
	6	578201000	(10314332-)	Screw, Pan, #10- 32 X 0.50, Phl, Pl	2
	7	1026457	(10314332-)	Washer, Lock, Split, M5, Ss	2
	8	140011	(10314332-)	Washer, Flat, 0.21b 0.45d .03, Ss	2
	9	150419	(00000000-)	Fitting, Brs, E90, Bm06/Pm04 [Taped]	1
	10	605394	(10314332-)	Fitting, Brs, E45, Bm06/Pm04 [Taped]	1
	11	150418	(10314332-)	Fitting, Brs, E90, Bm04/Pm04	1
	12	140325	(10314332-)	Clamp, Hose, Ear, 0.50d, Ss	1
	13	140301	(00000000-)	Clamp, Hose, Ear, 0.62d	2
	14	613437	(10314332-)	Hose, Pvc, Brd, 0.25id 0.50od 33.0l,Gray	2.7ft
	15	613503	(10314332-)	Hose, Pvc, Brd, 0.38id 0.62od 75.0l,Gray	6.0ft
	16	613495	(10314332-)	Hose, Pvc, Brd, 0.38id 0.62od 40.0l,Gray	3.4ft
	17	54333	(00000000-)	Clamp, Hose, Wormdrive, 0.31- 0.88d, .31w	1
	18	606887	(10314332-)	Hose, Rbr, Dbl, 0.50id 0.75od 020.5l, Red	1.5ft
	19	1010836	(10314332-)	Fitting, Brs, E90, Bm08/Pm04	1
∇	20	1023693	(10314332-)	Valve, Solenoid 24vdc, 3 Station	1
▲	21	1034116	(10314332-)	Vr, Block, Manifold	1
▲∇	22	1034114	(10314332-)	Vr, Valve, Solenoid, 24vdc [Series 3]	1
▲▲	23	1034115	(10314332-)	Vr, Seal, Org, Solenoid [Series 3]	1
▲∇	24	1034112	(10314332-)	Vr, Valve, Solenoid Series 6, 24v	2
▲▲	25	1034113	(10314332-)	Vr, Seal, Org, Solenoid [Series 6]	2
	26	63810	(00000000-)	Clamp, Hose, Wormdrive, 0.56- 1.06d, .56w	1
	27	150517	(00000000-)	Fitting, Brs, Str, Bm08/Pm04 [Taped]	1
	28	150403	(00000000-)	Fitting, Brs, E45, Pf04/Pm04 [Taped]	1
	29	1013823	(00000000-)	Plug, Pipe, Ss 1/8npt W/ Hole	1
	30	150016	(00000000-)	Fitting, Brs, Str, Bm06/Pf02, Spcl	1
	31	607775	(00000000-)	Clamp, Hose, Wir, .63 - .66, Blk	4
	32	613444	(10314332-)	Hose, Pyu, Clr, 0.38id 0.62od 020.0l	1.7ft
	33	210044	(00000000-)	Valve, Check, 0001psi Bm06/Bm06	1
	34	606885	(10314332-)	Hose, Pyu, Clr, 0.38id 0.62od 007.5l	.42ft
	35	150412	(00000000-)	Fitting, Plstc, E90, Bm06/Pm06	1

∇ ASSEMBLY

▲ INCLUDED IN ASSEMBLY

SOLUTION GROUP - CONT'D (S/N 10314332-)

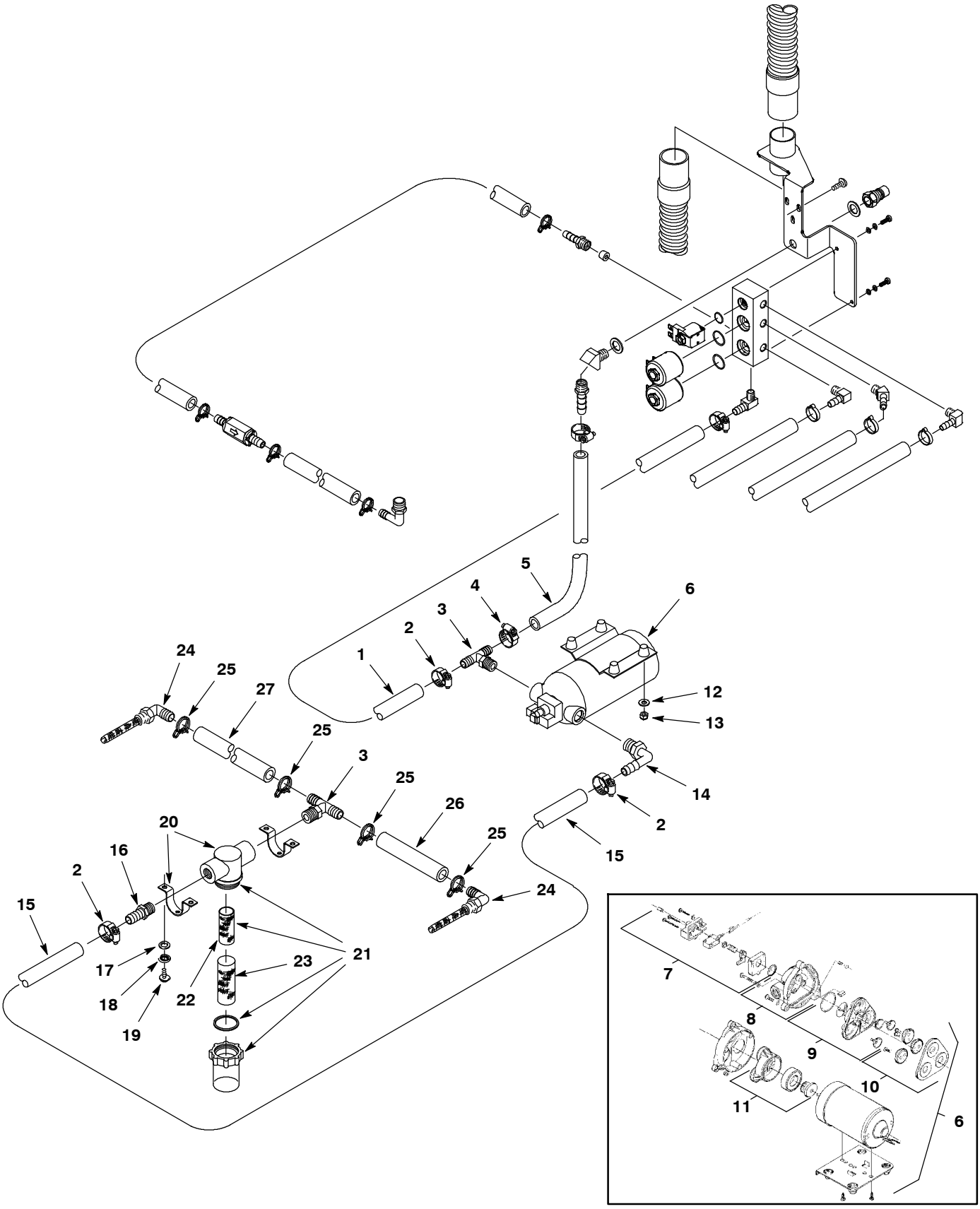

SOLUTION GROUP - CONT'D (S/N 10314332-)

	Ref.	Part No.	Serial Number	Description	Qty.
	1	606887	(10314332-)	Hose, Rbr, Dbl, 0.50id 0.75od 020.5l, Red	1.5ft
	2	54333	(10314332-)	Clamp, Hose, Wormdrive, 0.31- 0.88d, .31w	3
	3	605046	(00000000-)	Fitting, Plstc, Tee, Bm08/Bm08/Pm06, Run	2
	4	63810	(00000000-)	Clamp, Hose, Wormdrive, 0.56- 1.06d, .56w	1
	5	613961	(00000000-)	Hose, Rbr, Dbl, 0.50id 0.75od 11.0l, Red	.85ft
∇	6	603031	(00000000-)	Pump, Soltn, Ele, 24vdc, 100psi	1
▲	7	190129	(00000000-)	Switch, Press, Soltn Pump	1
▲	7	190172	(00000000-)	Switch Kit, 80- 100psi [Viton]	1
▲	7	190134	(00000000-)	Diaphragm, Switch [Shurflo]	1
▲	8	190128	(00000000-)	Housing Kit, Upper	1
▲	8	190124	(00000000-)	Valve Kit, Check, Replmt	1
▲	9	190171	(00000000-)	Valve Kit [Viton]	1
▲	10	190131	(00000000-)	Service Kit [Shurflo]	1
▲	11	190130	(00000000-)	Housing Kit, Lower [94- 385- 03]	1
	12	19066	(00000000-)	Washer, Flat, #10	2
	13	140552	(00000000-)	Nut, Hex, Lock, #10- 24, Nl, Ss	2
	14	1017532	(00000000-)	Fitting, Plstc, E90, Bm08/Pm06	1
	15	608176	(00000000-)	Hose, Pvc, Wir, 0.50id 0.75od 015.0l,Clr	.96ft
	16	14884	(00000000-)	Fitting, Brs, Str, Bm08/Pm06 [Taped]	1
	17	140011	(00000000-)	Washer, Flat, 0.21b 0.45d .03, Ss	4
	18	1026457	(00000000-)	Washer, Lock, Split, M5, Ss	4
	19	09200	(00000000-)	Screw, Pan, Phl, M5 X 0.80 X 12, Ss	4
	20	605056	(00000000-)	Bracket, Mtg, Fltr	2
∇	21	1007428	(00000000-)	Filter, Screen, 080 Mesh, Ss Bowl, Pf06	1
▲	22	180632	(00000000-)	Filter, Screen, In- Line Strainer	1
	23	180638	(00000000-)	Filter, Screen, 125 Mesh, Sleeve, Nyl	1
	24	1006924	(00000000-)	Filter, Soltn, W/ E90 Ftg	2
	25	607776	(00000000-)	Clamp, Hose, Wir, .73 - .77, Silver	4
	26	613514	(00000000-)	Hose, Pvc, Clr, 0.50id 0.75od 004.1l	.29ft
	27	613519	(00000000-)	Hose, Pvc, Clr, 0.50id 0.75od 008.5l	.71ft

∇ ASSEMBLY

▲ INCLUDED IN ASSEMBLY

SOLUTION GROUP (S/N 00000000- 10314331)

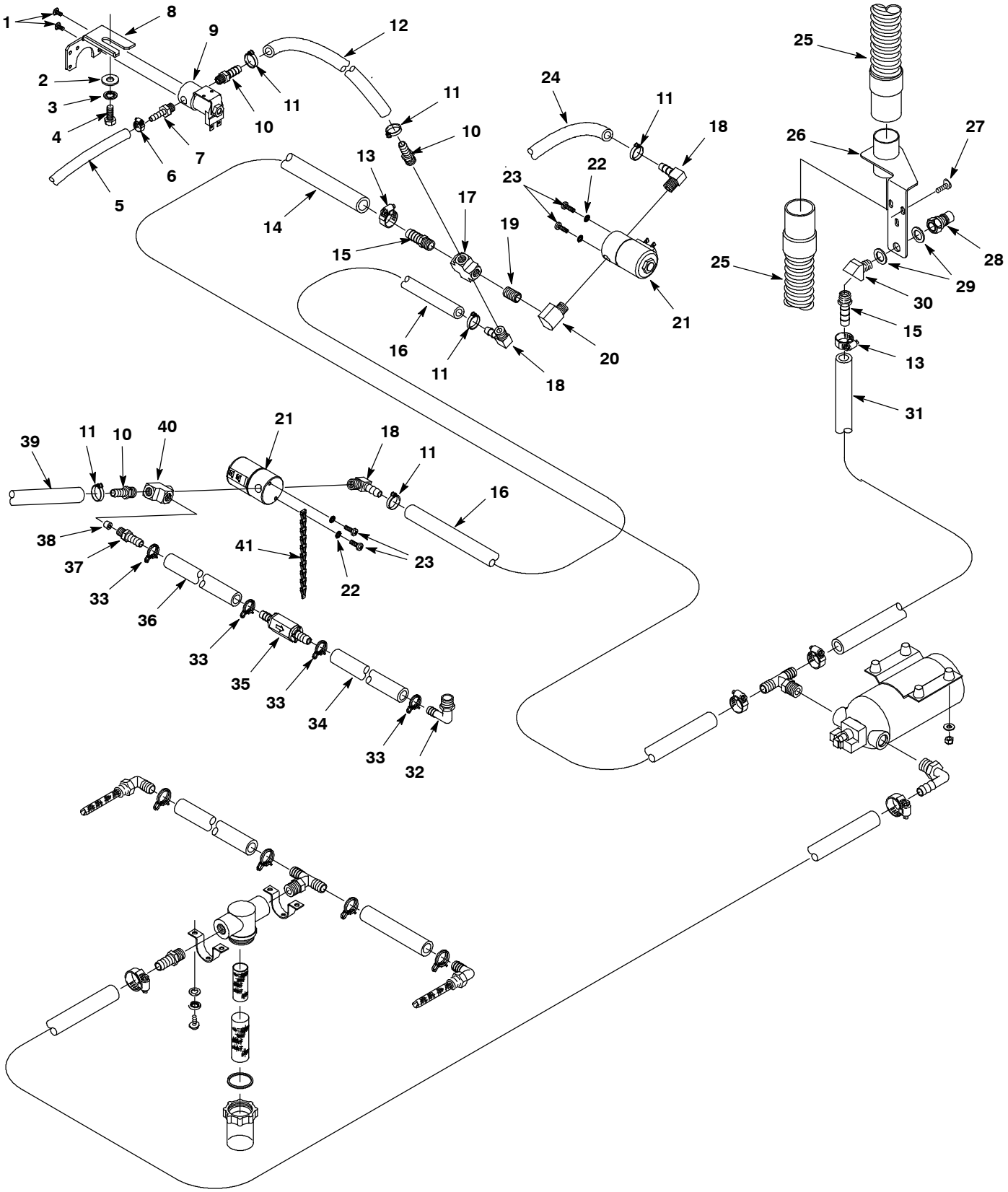

SOLUTION GROUP (S/N 00000000- 10314331)

Ref.	Part No.	Serial Number	Description	Qty.
1	140801	(00000000- 10314331)	Screw, Trs, #08- 32 X 0.38, Phl, Ss	2
2	32491	(00000000- 10314331)	Washer, Flat, 0.31, Std	1
3	43952	(00000000- 10314331)	Washer, Lock, Int, 0.31, Ss	1
4	16931	(00000000- 10314331)	Screw, Hex, M8 X 1.25 X 20, 8.8	1
5	606359	(00000000- 10314331)	Hose, Pvc, Brd, 0.25id 0.50od 08.0l,Gray	.67ft
6	140325	(00000000- 10314331)	Clamp, Hose, Ear, 0.50d, Ss	1
7	150515	(00000000- 10314331)	Fitting, Brs, Str, Bm04/Pm04 [Taped]	1
8	606104	(00000000- 10314331)	Bracket, Pump, Wand	1
9	607473	(00000000- 10314331)	Solenoid, Water, 24vdc [180mopsi]	1
10	150516	(00000000- 10314331)	Fitting, Brs, Str, Bm06/Pm05	3
11	140301	(00000000-)	Clamp, Hose, Ear, 0.62d	6
12	613479	(00000000- 10314331)	Hose, Pvc, Brd, 0.38id 0.62od 08.0l,Gray	.63ft
13	63810	(00000000-)	Clamp, Hose, Wormdrive, 0.56- 1.06d, .56w	4
14	613961	(00000000- 10314331)	Hose, Rbr, Dbl, 0.50id 0.75od 11.0l, Red	.67ft
15	150517	(00000000- 10314331)	Fitting, Brs, Str, Bm08/Pm04 [Taped]	2
16	613479	(00000000- 10314331)	Hose, Pvc, Brd, 0.38id 0.62od 08.0l,Gray	.59ft
17	150700	(00000000- 10314331)	Fitting, Brs, Cross, Pf04/Pf04/Pf04/Pf04	1
18	150419	(00000000- 10314331)	Fitting, Brs, E90, Bm06/Pm04 [Taped]	3
19	150615	(00000000- 10314331)	Fitting, Brs, Str, Pm04, Close, T	1
20	27048	(00000000- 10314331)	Fitting, Brs, E90, Pf04/Pm04	1
21	1017436	(00000000- 10314331)	Valve, Water, Solenoid, 24vdc 0150psi	2
22	07514	(00000000- 10314331)	Washer, Lock, Int, #10, Ss	4
23	140841	(00000000- 10314331)	Screw, Pan, #10- 32 X 0.62, Phl, Ss	4
24	613502	(00000000- 10314331)	Hose, Pvc, Brd, 0.38id 0.62od 61.9l,Gray	5.1ft
25	613759	(00000000-)	Hose, Vacuum, 1.50id X 034.0l, 2cuff,Clr	2
26	1001611	(00000000- 10314331)	Bracket, Hose, Vacuum	1
27	1019349	(00000000-)	Screw, Trs, M6 X 1.00 X 16, Ss, Sems	3
28	150933	(00000000-)	Fitting, Brs, Qdc, Pm04 [Ser60]	1
29	140008	(00000000-)	Washer, Flat, 0.57b 1.28d .08, Ss	2
30	150403	(00000000-)	Fitting, Brs, E45, Pf04/Pm04 [Taped]	1
31	613961	(00000000-)	Hose, Rbr, Dbl, 0.50id 0.75od 11.0l, Red	.85ft
32	150412	(00000000-)	Fitting, Plstc, E90, Bm06/Pm06	1
33	607775	(00000000-)	Clamp, Hose, Wir, .63 - .66, Blk	4
34	606885	(00000000-)	Hose, Pyu, Clr, 0.38id 0.62od 007.5l	.63ft
35	210044	(00000000-)	Valve, Check, 0001psi Bm06/Bm06	1
36	606885	(00000000-)	Hose, Pyu, Clr, 0.38id 0.62od 007.5l	.63ft
37	150016	(00000000-)	Fitting, Brs, Str, Bm06/Pf02, Spcl	1
38	1013823	(00000000-)	Plug, Pipe, Ss 1/8npt W/ Hole	1
39	613488	(00000000- 10314331)	Hose, Pvc, Brd, 0.38id 0.62od 24.0l,Gray	2.0ft
40	150709	(00000000- 10314331)	Fitting, Brs, Tee, Pm04/Pf04/Pf04, Run	1
41	1017986	(00000000- 10314331)	Chain, Static, 143mml	1

∇ ASSEMBLY

▲ INCLUDED IN ASSEMBLY

SOLUTION GROUP - CONT'D (S/N 00000000-10314331)

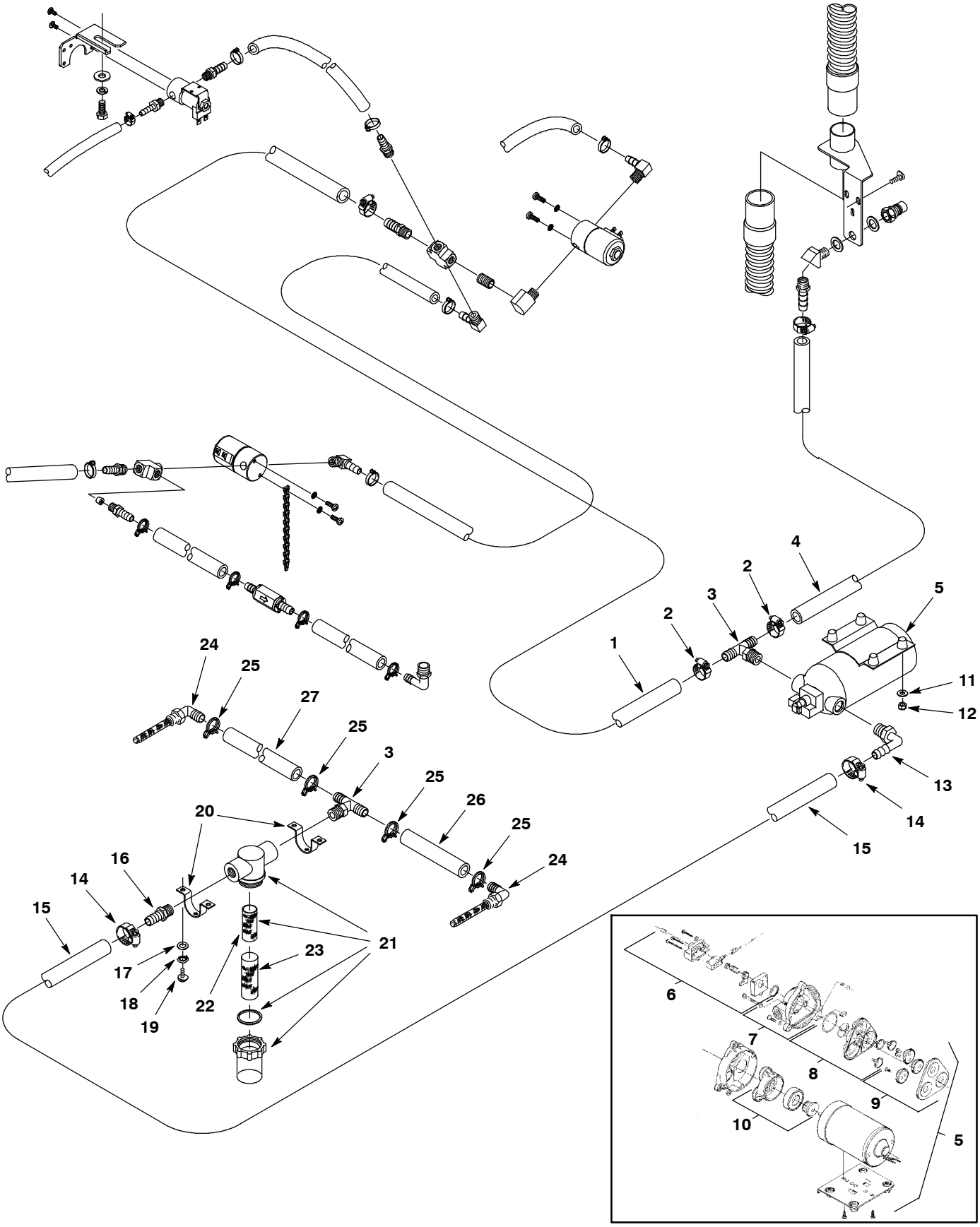

SOLUTION GROUP - CONT'D (S/N 00000000- 10314331)

	Ref.	Part No.	Serial Number	Description	Qty.
	1	613961	(00000000- 10314331)	Hose, Rbr, Dbl, 0.50id 0.75od 11.0l, Red	.67ft
	2	63810	(00000000-)	Clamp, Hose, Wormdrive, 0.56- 1.06d, .56w	4
	3	605046	(00000000-)	Fitting, Plstc, Tee, Bm08/Bm08/Pm06, Run	2
	4	613961	(00000000-)	Hose, Rbr, Dbl, 0.50id 0.75od 11.0l, Red	.85ft
∇	5	603031	(00000000-)	Pump, Soltn, Ele, 24vdc, 100psi	1
▲	6	190129	(00000000-)	Switch, Press, Soltn Pump	1
▲	6	190172	(00000000-)	Switch Kit, 80- 100psi [Viton]	1
▲	6	190134	(00000000-)	Diaphragm, Switch [Shurflo]	1
▲	7	190128	(00000000-)	Housing Kit, Upper	1
▲	7	190124	(00000000-)	Valve Kit, Check, Replmt	1
▲	8	190171	(00000000-)	Valve Kit [Viton]	1
▲	9	190131	(00000000-)	Service Kit [Shurflo]	1
▲	10	190130	(00000000-)	Housing Kit, Lower [94- 385- 03]	1
	11	19066	(00000000-)	Washer, Flat, #10	2
	12	140552	(00000000-)	Nut, Hex, Lock, #10- 24, Nl, Ss	2
	13	1017532	(00000000-)	Fitting, Plstc, E90, Bm08/Pm06	1
	14	54333	(00000000-)	Clamp, Hose, Wormdrive, 0.31- 0.88d, .31w	2
	15	608176	(00000000-)	Hose, Pvc, Wir, 0.50id 0.75od 015.0l,Clr	.96ft
	16	14884	(00000000-)	Fitting, Brs, Str, Bm08/Pm06 [Taped]	1
	17	140011	(00000000-)	Washer, Flat, 0.21b 0.45d .03, Ss	4
	18	1026457	(00000000-)	Washer, Lock, Split, M5, Ss	4
	19	09200	(00000000-)	Screw, Pan, Phl, M5 X 0.80 X 12, Ss	4
	20	605056	(00000000-)	Bracket, Mtg, Fltr	2
∇	21	1007428	(00000000-)	Filter, Screen, 080 Mesh, Ss Bowl, Pf06	1
▲	22	180632	(00000000-)	Filter, Screen, In- Line Strainer	1
	23	180638	(00000000-)	Filter, Screen, 125 Mesh, Sleeve, Nyl	1
	24	1006924	(00000000-)	Filter, Soltn, W/ E90 Ftg	2
	25	607776	(00000000-)	Clamp, Hose, Wir, .73 - .77, Silver	4
	26	613514	(00000000-)	Hose, Pvc, Clr, 0.50id 0.75od 004.1l	.29ft
	27	613519	(00000000-)	Hose, Pvc, Clr, 0.50id 0.75od 008.5l	.71ft

∇ ASSEMBLY

▲ INCLUDED IN ASSEMBLY

BATTERY AND CHARGER GROUP

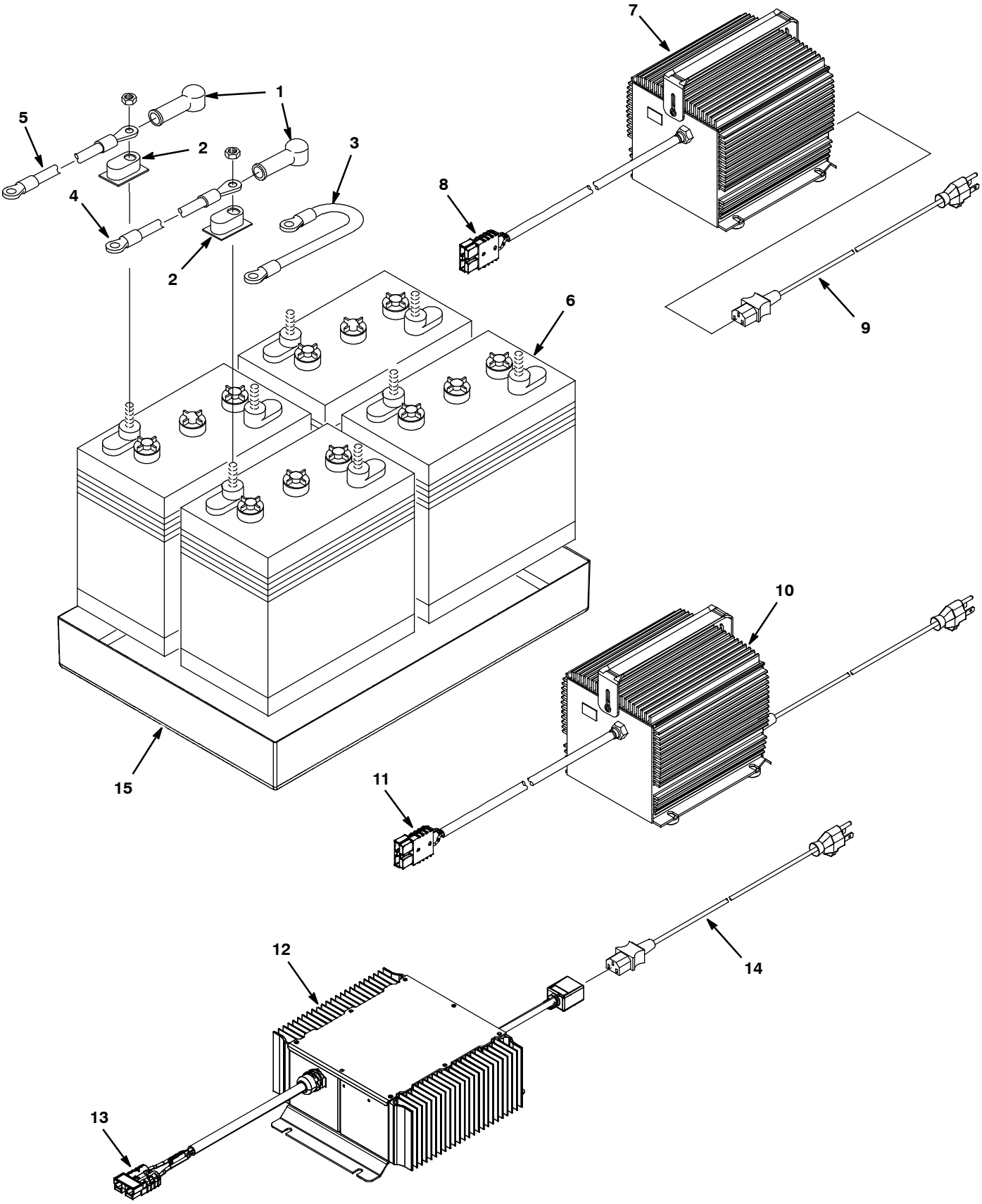

BATTERY AND CHARGER GROUP

	Ref.	Part No.	Serial Number	Description	Qty.
	1	611221	(00000000-)	Boot, Terminal, Battery, 25.4mm, Blk	8
	2	45962	(00000000-)	Cap, Plstc, .04 1.38 X 2.30 0.5l (Standard - Tall Clear)	8
	2	1041030	(00000000-)	Cap, Battery (Optional - Short Black)	8
	3	130364	(00000000-)	Cable, 06ga 15.0l Blk .31ring /.38ring	3
	4	602872	(00000000-)	Cable, Battery, .31 X .38 [#6redx28.0]	1
	5	602871	(00000000-)	Cable, 06ga 24.0l Blk .25ring /.31ring	1
	6	222280	(00000000-)	Battery, Wet, 06vdc 0235ah	4
	6	10155	(00000000-)	Battery, Wet, 06vdc (Japan)	4
	6	1262245	(00000000-)	Battery, Agm, 06vdc 0210ah	4
	6	1251239	(00000000-)	Battery, Agm, 06vdc 0260ah, Cn (China Only)	4
∇	7	1029256	(00000000-)	Charger, 24vdc, 19a Var Vac 1ph 50/60hz	1
▲	8	605387	(00000000-)	Connector, Anderson, 50a,Red W/O Contact	1
▲	9	1017079	(00000000-)	Cord, Extn, 16ga /3, 010ft [Sjt]	1
∇	7	9009310	(00000000-)	Charger Kit, 24vdc, 19a Var50/60hz [Kor] (Korea)	1
▲	8	605387	(00000000-)	Connector, Anderson, 50a,Red W/O Contact	1
▲	9	1070626	(00000000-)	Cord, Power, 2.5m L, 7mm Dia, Blk[Korea]	1
∇	7	1058164	(00000000-)	Charger, 24vdc, 19a, 1ph 50/60hz, Agm	1
▲	8	605387	(00000000-)	Connector, Anderson, 50a,Red W/O Contact	1
▲	9	1017079	(00000000-)	Cord, Extn, 16ga /3, 010ft [Sjt]	1
∇	10	1067630	(00000000-)	Charger, 24vdc, 19a Var Vac 50/60hz (Japan)	1
▲	11	605387	(00000000-)	Connector, Anderson, 50a,Red W/O Contact	1
∇	12	1043663	(00000000-)	Charger, 24vdc 25a 100- 240vac 50/60hz (Japan)	1
▲	13	605387	(00000000-)	Connector, Anderson, 50a,Red W/O Contact	1
▲	14	1017079	(00000000-)	Cord, Extn, 16ga /3, 010ft [Sjt]	1
	15	613971	(00000000-)	Tray, Battery, Trimmed	1

∇ ASSEMBLY

▲ INCLUDED IN ASSEMBLY

REPLACEMENT ROLLERS AND BRUSHES

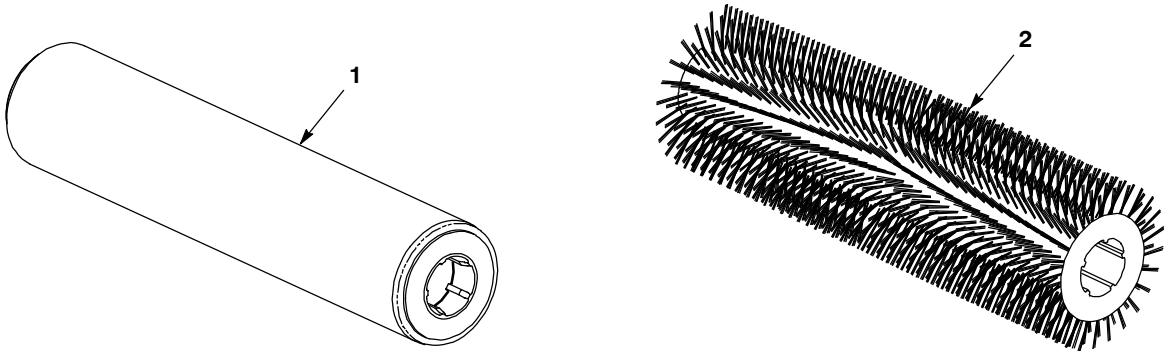

Ref.	Part No.	Serial Number	Description	Qty.
1	1013760*	(00000000-)	Roller Assy [Soil Transfer]	2
2	1008997*	(00000000-)	Brush, Scb, 22l, 10sr, Nyl, Spl	2

* BRUSHES AND ROLLERS NOT AVAILABLE AS A SET OF 2. MUST ORDER 2 SEPARATE PIECES.

MULTI-MEDIA

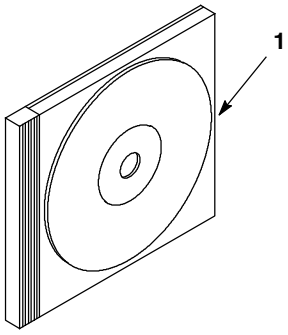

Ref.	Part No.	Serial Number	Description	Qty.
1	1059837	(00000000-)	Media, Dvd, Training, Eng [1610]	1
1	1059843	(00000000-)	Media, Dvd, Training, Spn [1610]	1
1	1059846	(00000000-)	Media, Dvd, Training, Inter, Eng [1610] (Interactive)	1
1	1059852	(00000000-)	Media, Dvd, Training, Inter, Spn [1610] (Interactive)	1

WIRE HARNESS GROUP, MAIN (S/N 10243221-)

WIRE LIST

WIRE NO.	AWG	COLOR
1	12	BLACK
2	12	RED
3	18	BLACK
4	18	GRAY
5	18	BLACK
6	12	RED
7	18	BLACK
8	10	RED
9	18	GREEN
10	22	GREEN
11	16	BLACK
12	12	BLUE
13	12	BLACK
14	12	BLUE
15	16	BLACK
16	12	TAN
17	12	BLACK
18	12	TAN
19	12	BLACK
20	18	BLUE
21	10	BLACK
22	18	BLUE
23	18	BLACK
24	18	RED
25	12	BLACK
26	18	YELLOW
27	16	BLACK
28	12	BLUE

WIRE LIST

WIRE NO.	AWG	COLOR
29	16	BLACK / WHITE
30	18	RED
31	18	BLACK
32	18	RED
33	18	BLUE
34	18	BLUE
35	10	BLACK
36	10	RED
37	18	BLACK
38	18	RED
39	18	BLACK
40	12	TAN
41	18	BLACK
42	16	GREEN
43	18	BLACK
44	18	YELLOW
45	12	BLACK
46	18	GREEN
47	16	BLACK / WHITE
48	12	RED
49	18	BLACK
50	12	TAN
51	18	TAN
52	18	GREEN
53	18	BLACK
54	18	GREEN
55	18	YELLOW
56	18	YELLOW

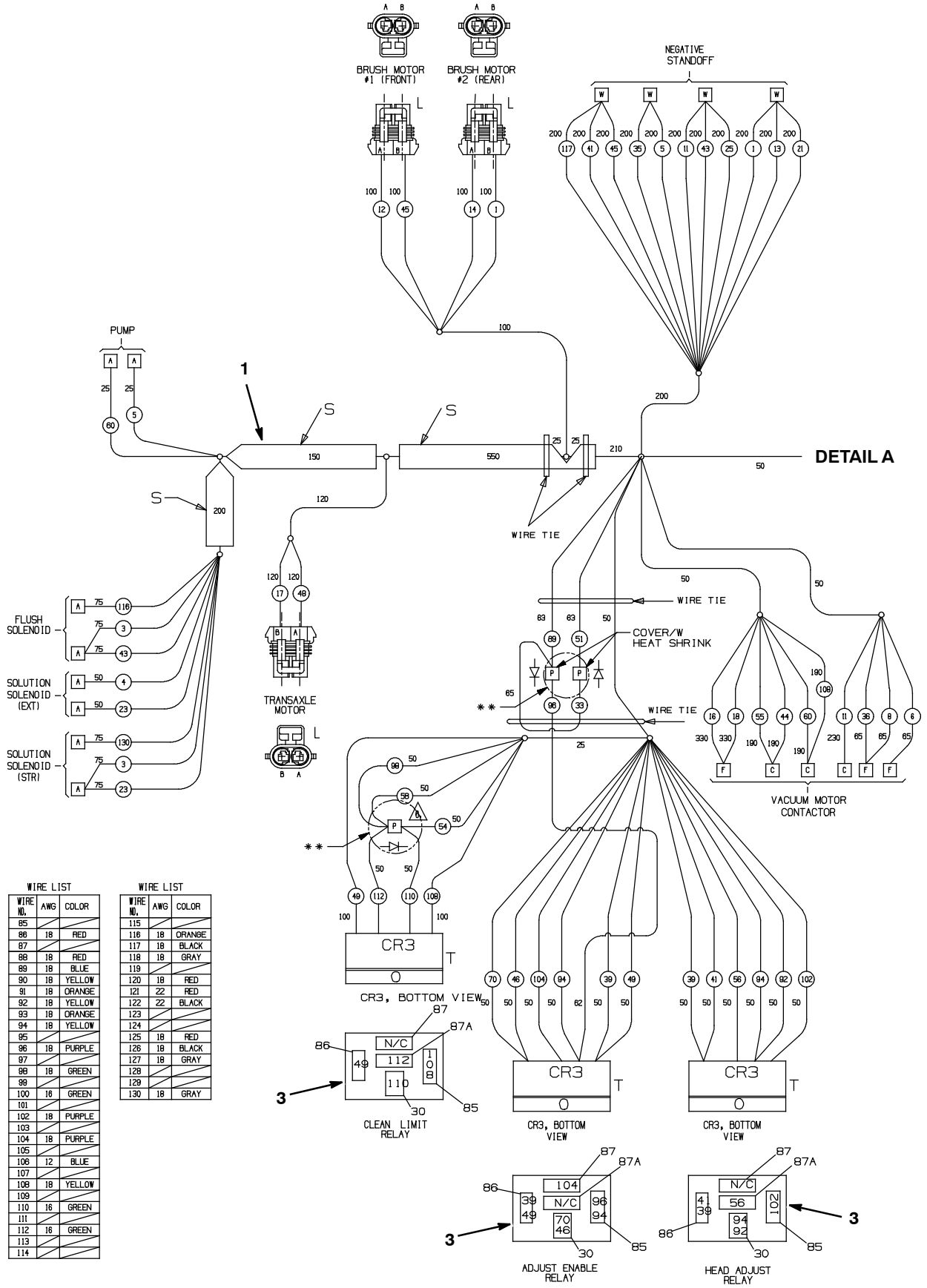

WIRE LIST

WIRE NO.	AWG	COLOR
57		
58	16	GREEN
59		
60	18	BLUE
61		
62	18	RED
63		
64	18	GRAY
65		
66	18	YELLOW
67		
68	12	RED
69		
70	16	PURPLE
71		
72	18	RED
73		
74	18	RED
75	18	GREEN
76	12	ORANGE
77		
78	12	RED
79		
80	12	BLUE
81		
82	18	BLUE
83		
84		

WIRE LIST

WIRE NO.	AWG	COLOR
85		
86	18	RED
87		
88	18	RED
89	18	BLUE
90	18	YELLOW
91	18	ORANGE
92	18	YELLOW
93	18	ORANGE
94	18	YELLOW
95		
96	18	PURPLE
97		
98	18	GREEN
99		
100	18	GREEN
101		
102	18	PURPLE
103		
104	18	PURPLE
105		
106	12	BLUE
107		
108	18	YELLOW
109		
110	16	GREEN
111		
112	16	GREEN
113		
114		

WIRE LIST

WIRE NO.	AWG	COLOR
115		
116	18	ORANGE
117	18	BLACK
118	18	GRAY
119		
120	18	RED
121	22	RED
122	22	BLACK
123		
124		
125	18	RED
126	18	BLACK
127	18	GRAY
128		
129		
130	18	GRAY

WIRE HARNESS GROUP, MAIN - CONT'D (S/N 10243221-)

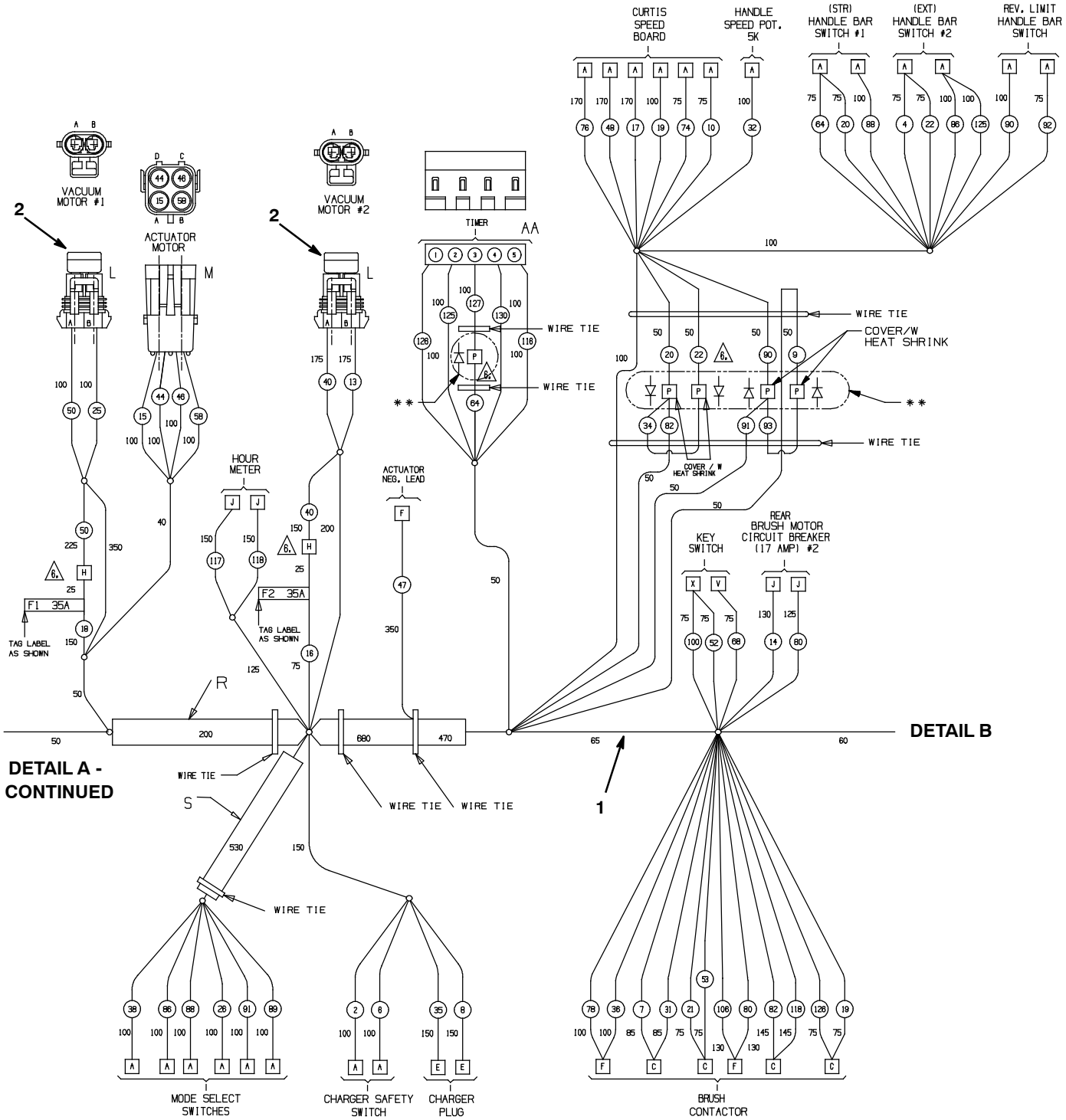

WIRE HARNESS GROUP, MAIN - CONT'D (S/N 10243221-)

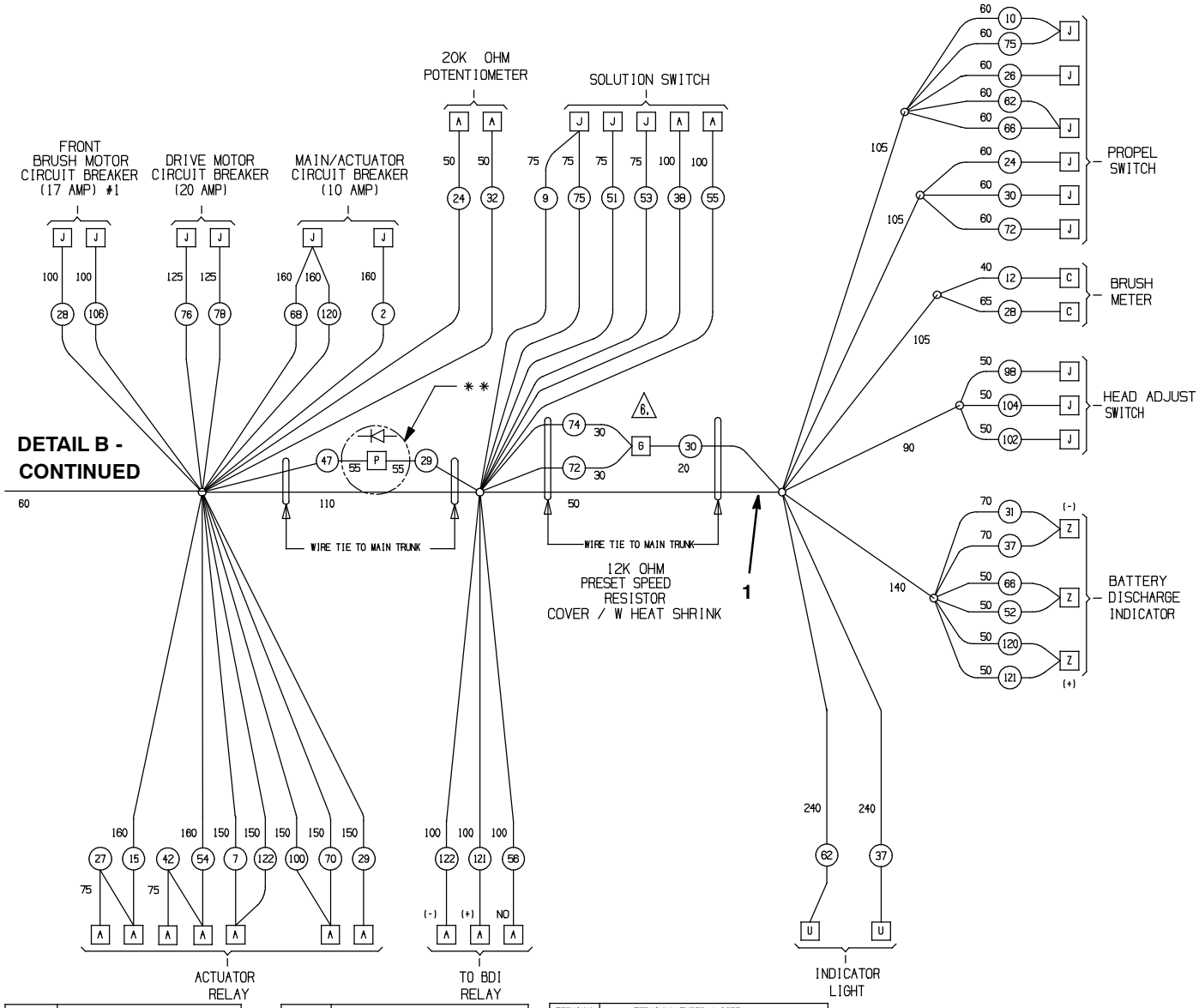

TERMINAL	TERMINAL TYPES & SIZE
K	
J	.250 FEMALE F/I, 90° FLAG, WITH HEAT SHRINK COVERING THE TERMINAL END.
I	
H	35 AMP. FUSE, ATO LITTLE FUSE 257035 USED WITH P.E. MP630 2F BODY: 12033769 (1) TERMINALS: 12033987 (2) COVER: 12033731 (1)
G	12K OHM, 1/2W ±5%, RESISTOR FULLY INSULATED.
F	5/16" RING INSULATED.
E	CONTACT, SMH SY90401
D	
C	#10 RING INSULATED.
B	
A	.250" F/I FEMALE TERMINAL
AA	.156" CONNECTOR, 5 PINS, LOCKING, AMP PART NUMBER: 640426-5, STRAIN RELIEF AMP PART NUMBER: 643087-5.

TERMINAL	TERMINAL TYPES & SIZE
R	7/8" (22mm) CORRUGATED SPLIT LOOM INDAMAC BRAND, I.D. .861"-.887" (21.88 - 22.52mm), O.D. 1.117"-1.142" (28.38 - 29.0mm).
Q	
** P	DIODE, MR754, OR VISHAY 61754 6A,400V CRIMP AND SOLDER CONNECTIONS. COVER DIODE & CONNECTIONS WITH HEATSHRINK.
N	
M	PACKARD CONNECTOR, P/N 12015024, WITH WEATHERPACK MALE TERMINAL. 12124582, AND WEATHERPACK CABLE SEAL.
05 L	PACKARD CONNECTOR SERIES 480,P/N 12052813, WITH FEMALE TERMINAL 12052139. INCLUDE PACKARD CABLE SEALS & TPA.

TERMINAL	TERMINAL TYPES & SIZE
Z	0.187" X 0.032" FEMALE TERMINAL (48014S-1), FULLY INSULATED, INSULATION LENGTH NOT TO EXCEED 0.875" MEASURED FROM END OF TERMINAL.
X	CRIMP AND SOLDER WIRES TOGETHER. 1/4" INSULATION STRIPPED WITH FERRULE TO FIT MAX. O.D. OF 2.5mm(#14 AWG) WIRE
W	1/4" RING INSULATED
V	1/4" STRIP & TINNED
U	.187" X .020" F/I FEMALE FLAG TERMINAL: HEAT SHRINK
T	RELAY SOCKET, BOSCH #3-334-485-OOB. TERMINAL = .25F, AMP #42100-2.
S	1/2" CONDUIT CORRUGATED SPLIT LOOM.

	Ref.	Part No.	Serial Number	Description	Qty.
∇	1	1024872	(10243221-)	Harness, Main, 24vdc [Str, Sol Off]	1
▲	2	1036268	(00000000-)	Fuse, Blade, 035a, 32vdc	2
▲	3	49309	(00000000-)	Relay, 24vdc, 015a, Spdt No	3

∇ ASSEMBLY

▲ INCLUDED IN ASSEMBLY

WIRING DIAGRAM

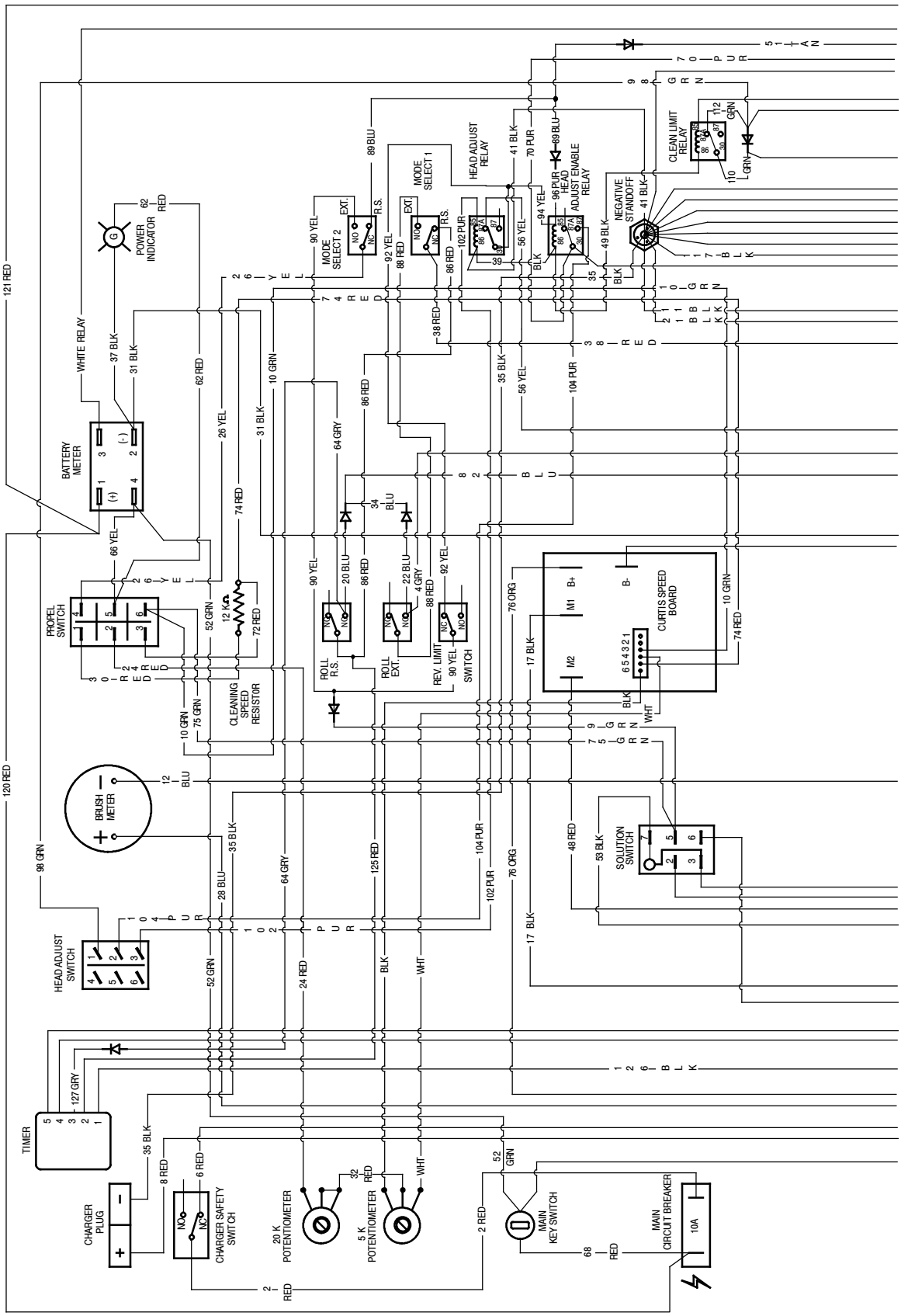

WIRING DIAGRAM

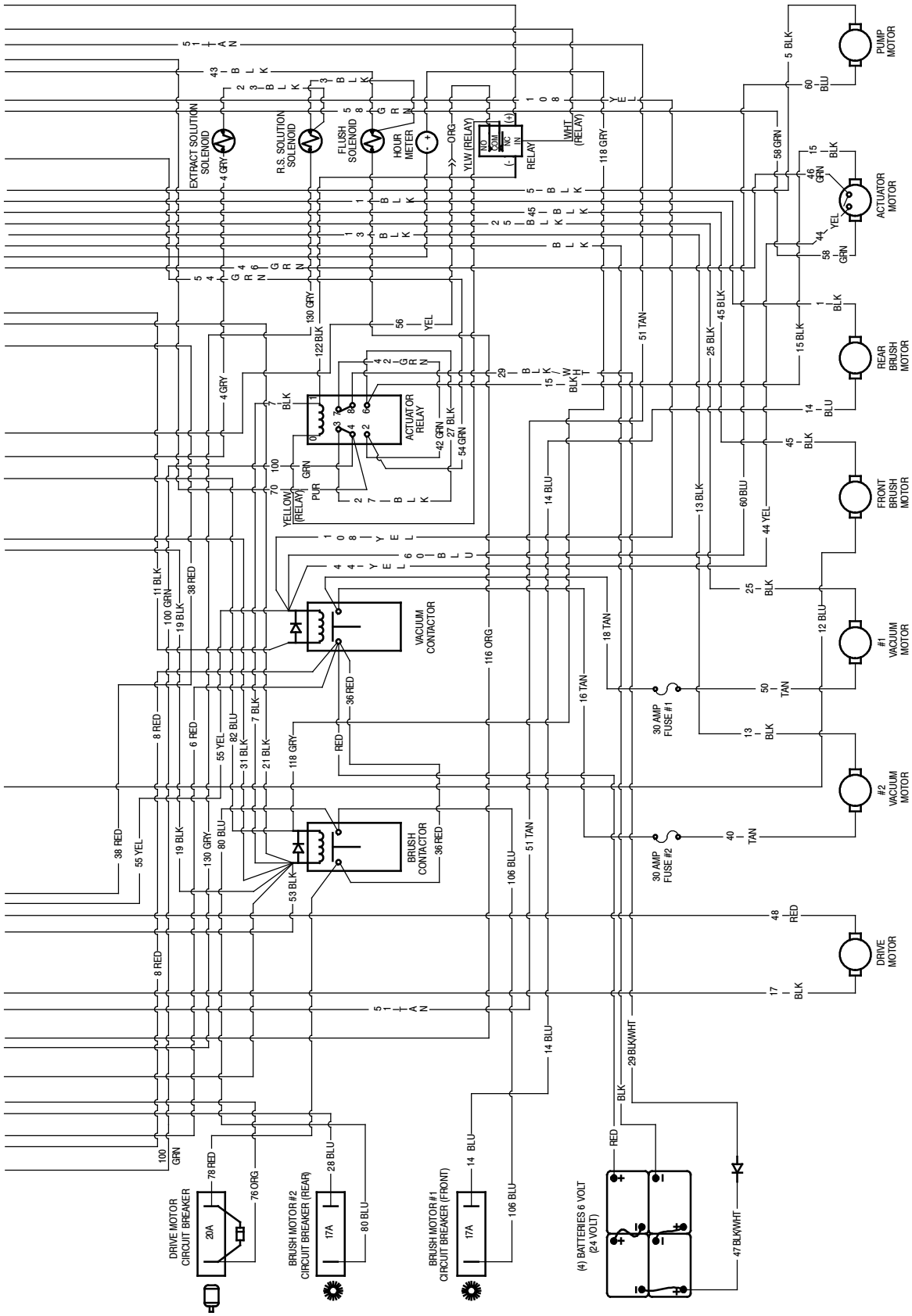

LADDER DIAGRAM

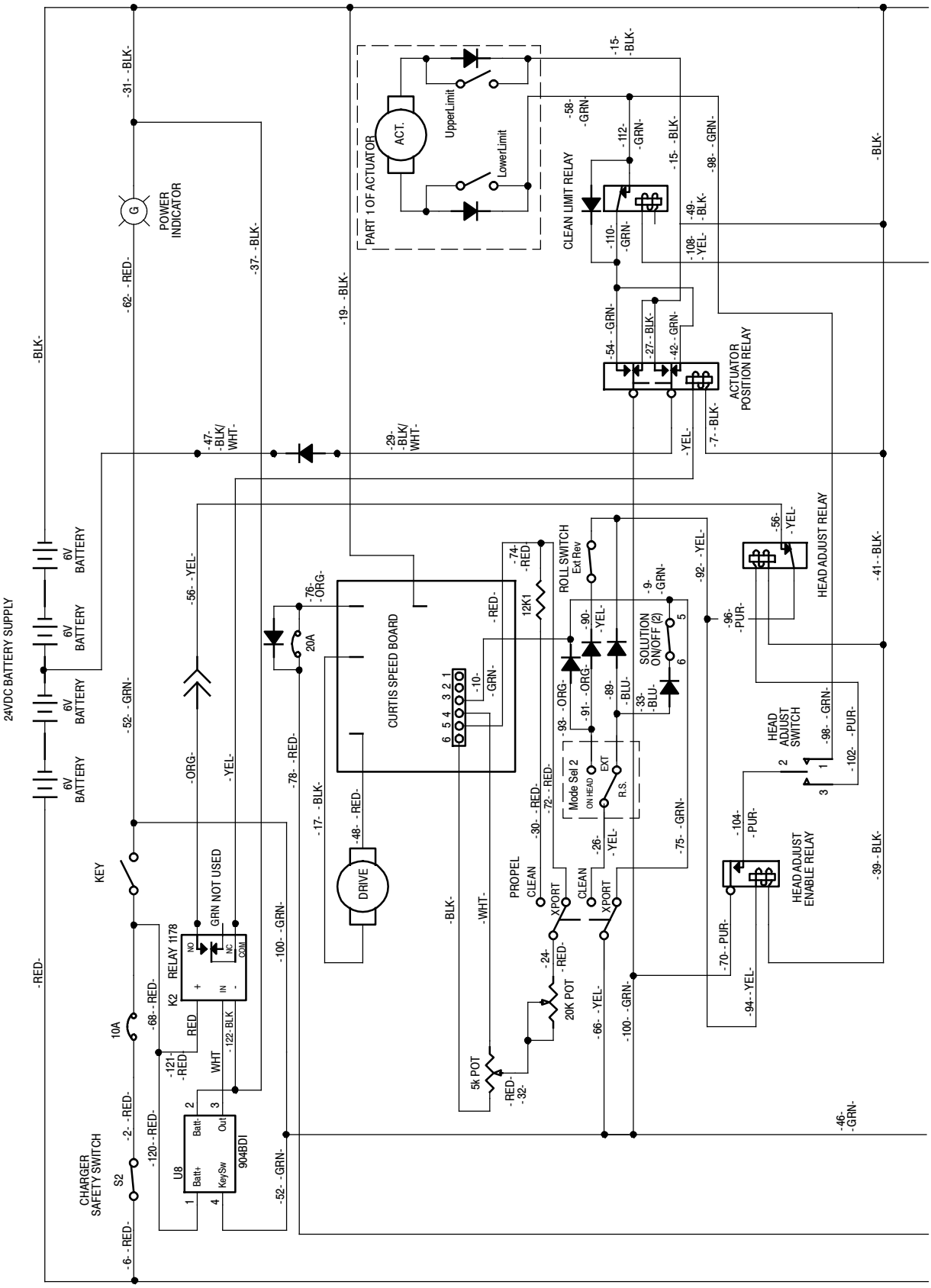

LADDER DIAGRAM

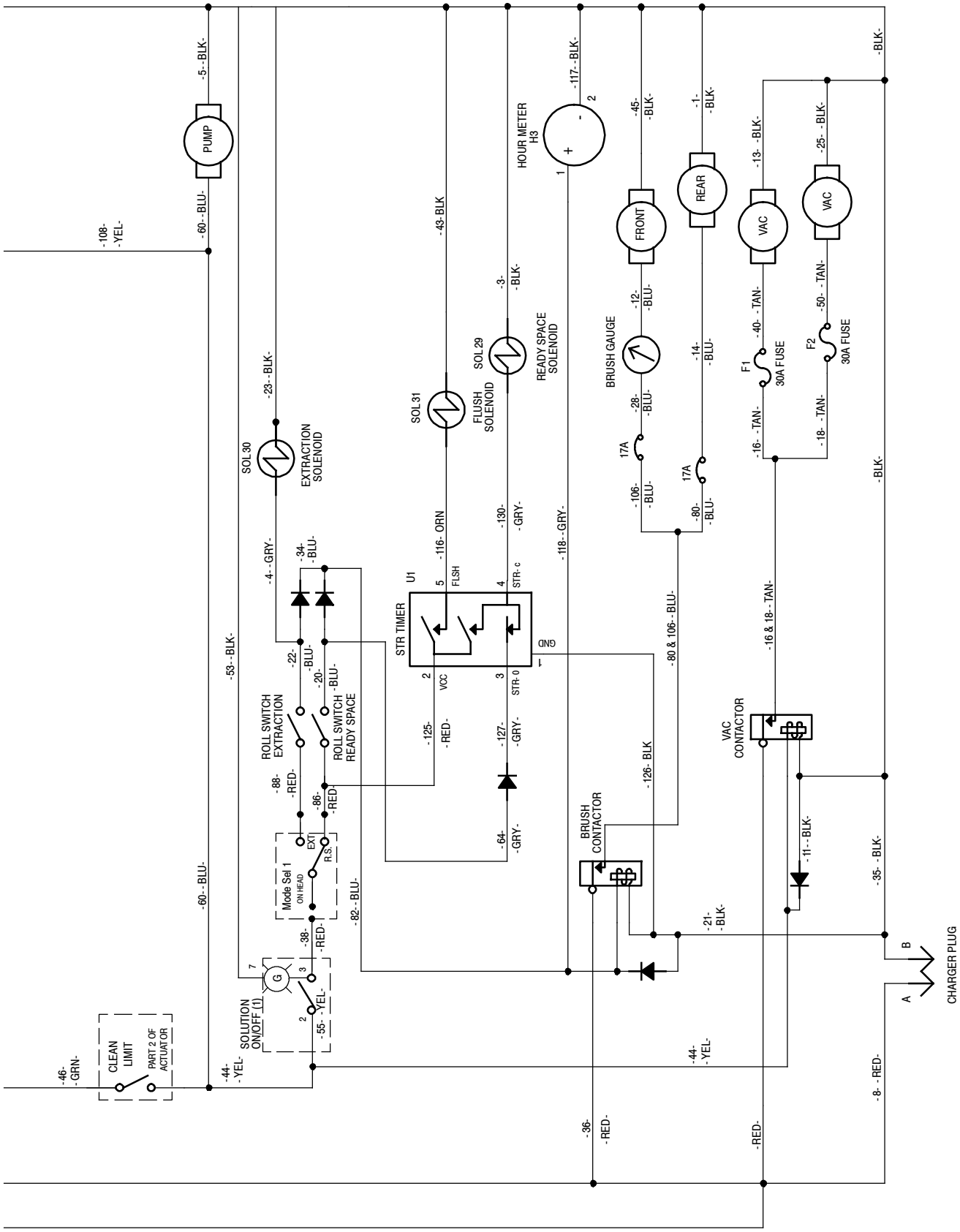

MANUAL BATTERY WATERING SYSTEM

355801

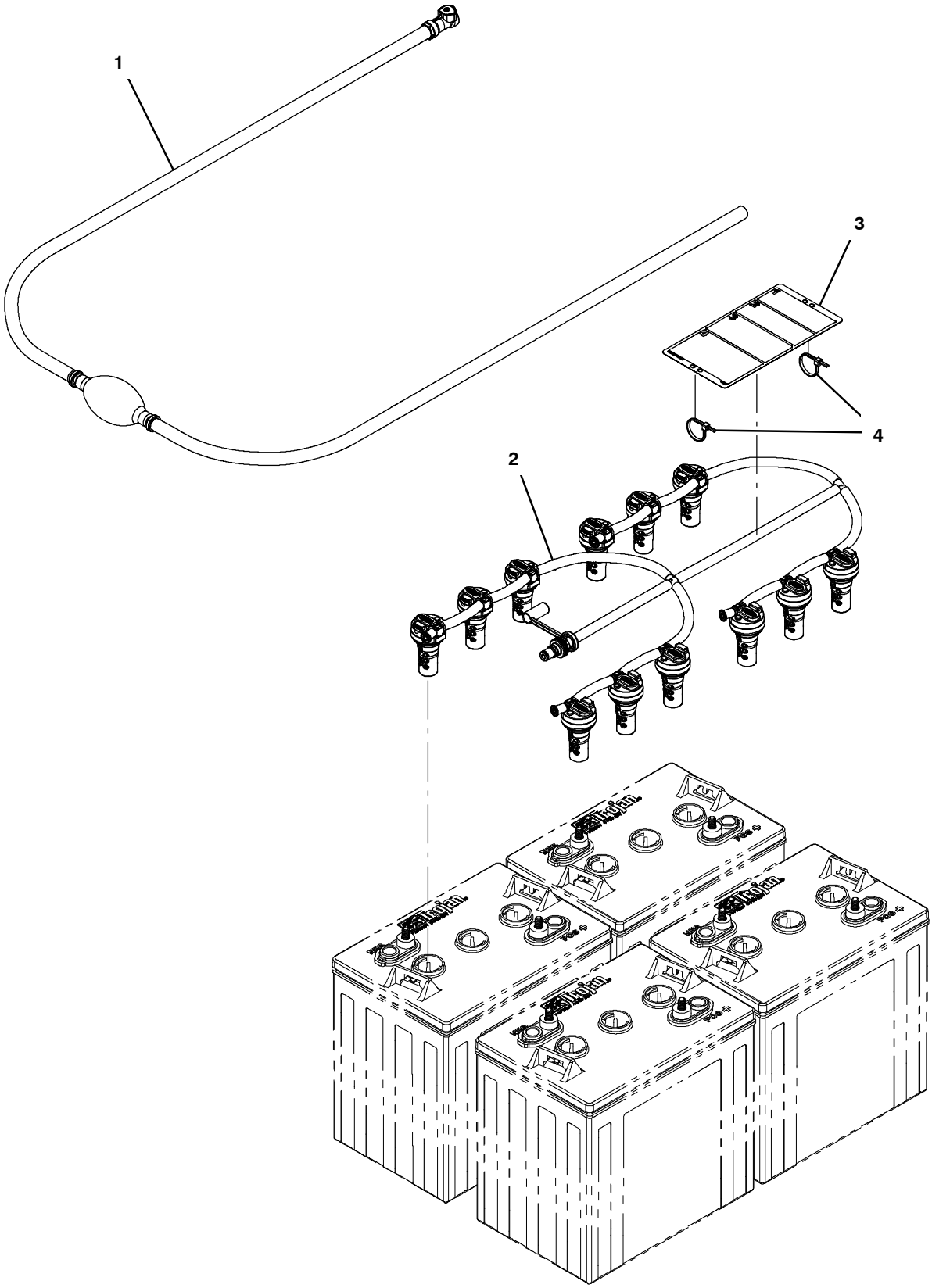

MANUAL BATTERY WATERING SYSTEM

	Ref.	Part No.	Serial Number	Description	Qty.
∇		9021123*	(00000000-)	Fill Kit, Battery, manual, Ci [Trojan]	1
▲	1	1236295	(00000000-)	Pump, Hand, Battery	1
▲	2	9021081	(00000000-)	Manifold Kit, Water, 4 Btry [Trojan]	1
▲	3	1253250	(00000000-)	Label, Tag, Battery [Bwt Watering]	1
▲	4	130773	(00000000-)	Tie, Cable, Nyl, 11.0l, .14w, 3.0 Max. D	2

*THIS KIT IS INTENDED FOR USE WITH TROJAN® LEAD ACID BATTERIES ONLY.

∇ ASSEMBLY
▲ INCLUDED IN ASSEMBLY

FLOOR TOOL, LOW PRESSURE 330 mm (13 in)

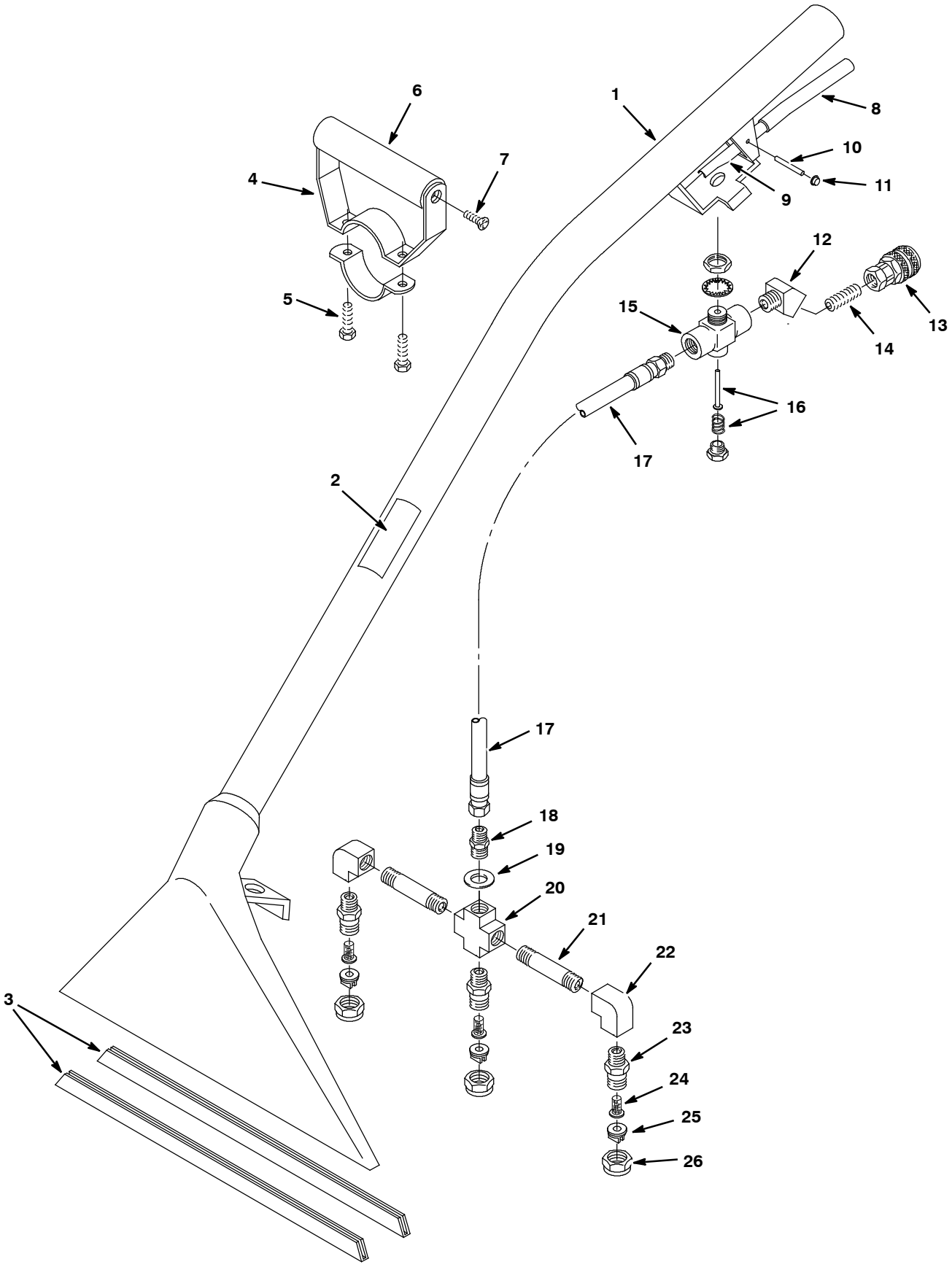

FLOOR TOOL, LOW PRESSURE 330 mm (13 in)

	Ref.	Part No.	Serial Number	Description	Qty.
∇		600048	(00000000-)	Tool, Floor, 13.0w, 33cm [W/3 Nozzles]	1
▲	1	200403.BK	(00000000-)	Tool, Pickup, Floor, 12w, Blk	1
▲	2	120846	(00000000-)	Label, Low- Press Floor Tool	1
▲	3	200939	(00000000-)	Plate, Tool, Floor, 13.00 [Shoe]	2
▲∇	4	200927	(00000000-)	Grip, Hand, Adj, Complt	1
▲▲	5	01697	(00000000-)	Screw, Hex, .25- 20 X 0.62, Ss	2
▲▲	6	200912	(00000000-)	Grip, Handle, Foam	1
▲▲	7	140834	(00000000-)	Screw, Flt, .25- 20 X 0.62, Phl, Ss	2
▲	8	200809	(00000000-)	Sleeve, Handle / Floor Tool	1
▲	9	200902	(00000000-)	Handle, Valve [Imperial]	1
▲	10	140605	(00000000-)	Pin, Handle [Imperial Eastman]	1
▲	11	140520	(00000000-)	Nut, Push, .25id, Blk, Pl	2
▲	12	150403	(00000000-)	Fitting, Brs, E45, Pf04/Pm04 [Taped]	1
▲	13	150913	(00000000-)	Fitting, Brs, Qdc, Pf04 [Ser60]	1
▲	14	150615	(00000000-)	Fitting, Brs, Str, Pm04, Close, T	1
▲∇	15	210150	(00000000-)	Valve, Water, Flow Cntrl, Pf04/Pf04	1
▲▲	16	190603	(00000000-)	Imperial Eastman Kit, Repair	1
▲	17	160170	(00000000-)	Hose Assy, Wand, 47.34l[Endtoend, 42059]	1
▲	18	150606	(00000000-)	Fitting, Brs, Str, Pm04/Pm04 X1.38l[Nip]	1
▲	19	140058	(00000000-)	Washer, Flat, 0.54b 0.88d .06, Ss [Wand]	1
▲∇		700062	(00000000-)	Bar Assy, Spray, 12inch, W/O Tip[Flr Tl]	1
▲▲	20	150700	(00000000-)	Fitting, Brs, Cross, Pf04/Pf04/Pf04/Pf04	1
▲▲	21	150600	(00000000-)	Fitting, Brs, Nipple, .25qm X 2.0[Taped]	2
▲▲	22	150401	(00000000-)	Fitting, Brs, E90, Pf04/Pf04	2
▲▲	23	200993	(00000000-)	Fitting, Brs, Pm04 [Spray Body]	3
▲	24	200996	(00000000-)	Filter, Screen, 100 Mesh, Check Valve	3
▲	25	200964	(00000000-)	Fitting, Brs, Tip [11003, T- Jet]	3
▲	26	200994	(00000000-)	Cap, Nozzle, Spray [#8002]	3
	N/S	200170	(00000000-)	Squeegee Assy, 380mm /15.0, Complt (Optional - For Hard Floor Surfaces)	1

∇ ASSEMBLY

▲ INCLUDED IN ASSEMBLY

FLOOR TOOL, LOW PRESSURE 406 mm (16 in)

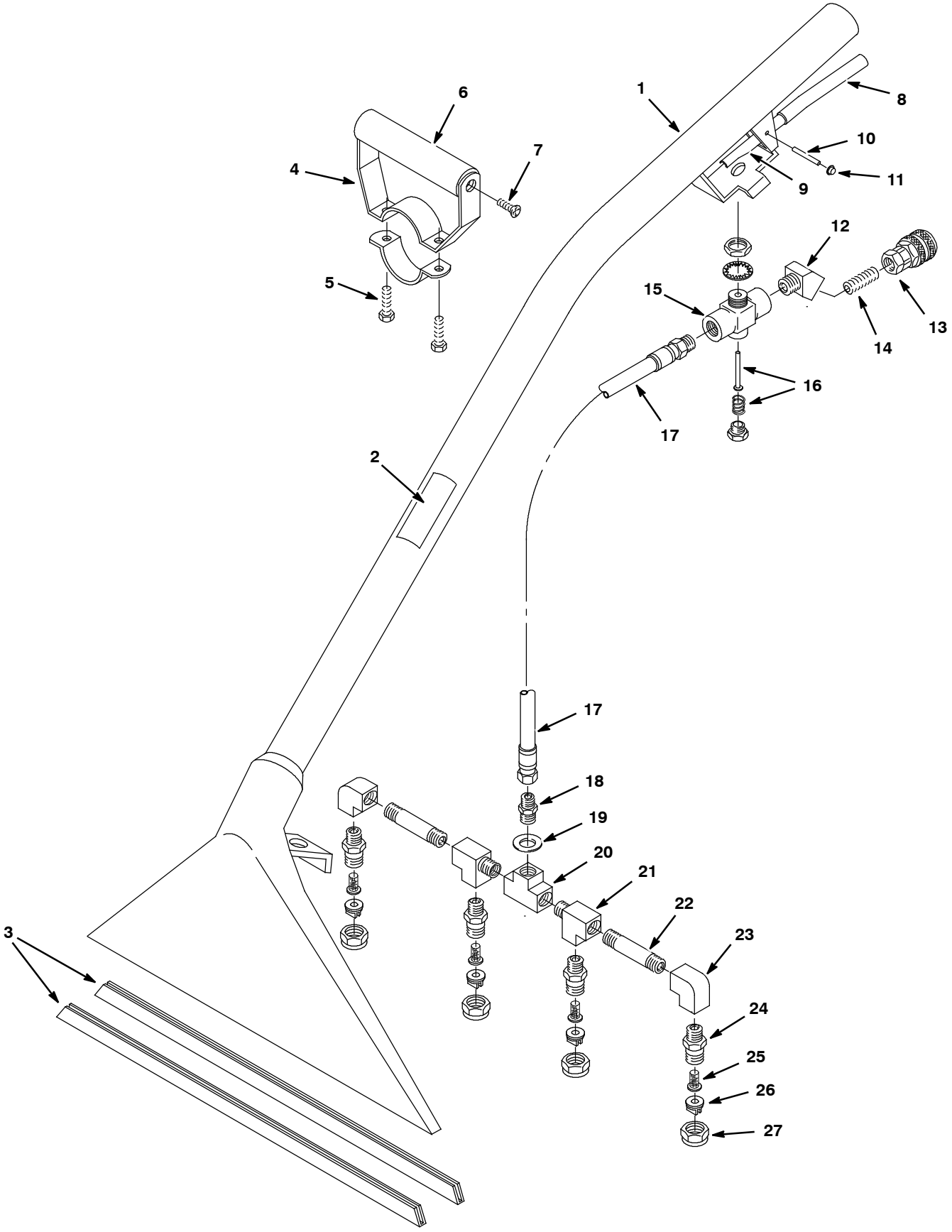

FLOOR TOOL, LOW PRESSURE 406 mm (16 in)

	Ref.	Part No.	Serial Number	Description	Qty.
∇		200503	(00000000-)	Tool, Pickup, Floor, 16w [Lp Series 60]	1
▲	1	200411.BK	(00000000-)	Tool, Pickup, Floor, 16w, Blk	1
▲	2	120846	(00000000-)	Label, Low- Press Floor Tool	1
▲	3	200956	(00000000-)	Plate, Floor, 16.00, Ss [Shoe]	2
▲∇	4	200927	(00000000-)	Grip, Hand, Adj, Complt	1
▲▲	5	01697	(00000000-)	Screw, Hex, .25- 20 X 0.62, Ss	2
▲▲	6	200912	(00000000-)	Grip, Handle, Foam	1
▲▲	7	140834	(00000000-)	Screw, Flt, .25- 20 X 0.62, Phl, Ss	2
▲	8	200809	(00000000-)	Sleeve, Handle / Floor Tool	1
▲	9	200902	(00000000-)	Handle, Valve [Imperial]	1
▲	10	140605	(00000000-)	Pin, Handle [Imperial Eastman]	1
▲	11	140520	(00000000-)	Nut, Push, .25id, Blk, Pl	2
▲	12	150403	(00000000-)	Fitting, Brs, E45, Pf04/Pm04 [Taped]	1
▲	13	150913	(00000000-)	Fitting, Brs, Qdc, Pf04 [Ser60]	1
▲	14	150615	(00000000-)	Fitting, Brs, Str, Pm04, Close, T	1
▲∇	15	210150	(00000000-)	Valve, Water, Flow Cntrl, Pf04/Pf04	1
▲▲	16	190603	(00000000-)	Imperial Eastman Kit, Repair	1
▲	17	160170	(00000000-)	Hose Assy, Wand, 47.34l[Endtoend, 42059]	1
▲	18	150606	(00000000-)	Fitting, Brs, Str, Pm04/Pm04 X1.38l[Nip]	1
▲	19	140058	(00000000-)	Washer, Flat, 0.54b 0.88d .06, Ss [Wand]	1
▲∇		700656	(00000000-)	Bar Assy, Spray, 16inch, W/O Tip	1
▲	20	150706	(00000000-)	Fitting, Brs, Tee, Pf04/Pf04/Pf04	1
▲▲	21	150709	(00000000-)	Fitting, Brs, Tee, Pm04/Pf04/Pf04, Run	2
▲▲	22	150600	(00000000-)	Fitting, Brs, Nipple, .25qm X 2.0[Taped]	2
▲▲	23	150401	(00000000-)	Fitting, Brs, E90, Pf04/Pf04	2
▲▲	24	200993	(00000000-)	Fitting, Brs, Pm04 [Spray Body]	4
▲	25	200996	(00000000-)	Filter, Screen, 100 Mesh, Check Valve	4
▲	26	200964	(00000000-)	Fitting, Brs, Tip [11003, T- Jet]	4
▲	27	200994	(00000000-)	Cap, Nozzle, Spray [#8002]	4

∇ ASSEMBLY

▲ INCLUDED IN ASSEMBLY

HAND TOOL, 127 mm (5 in)

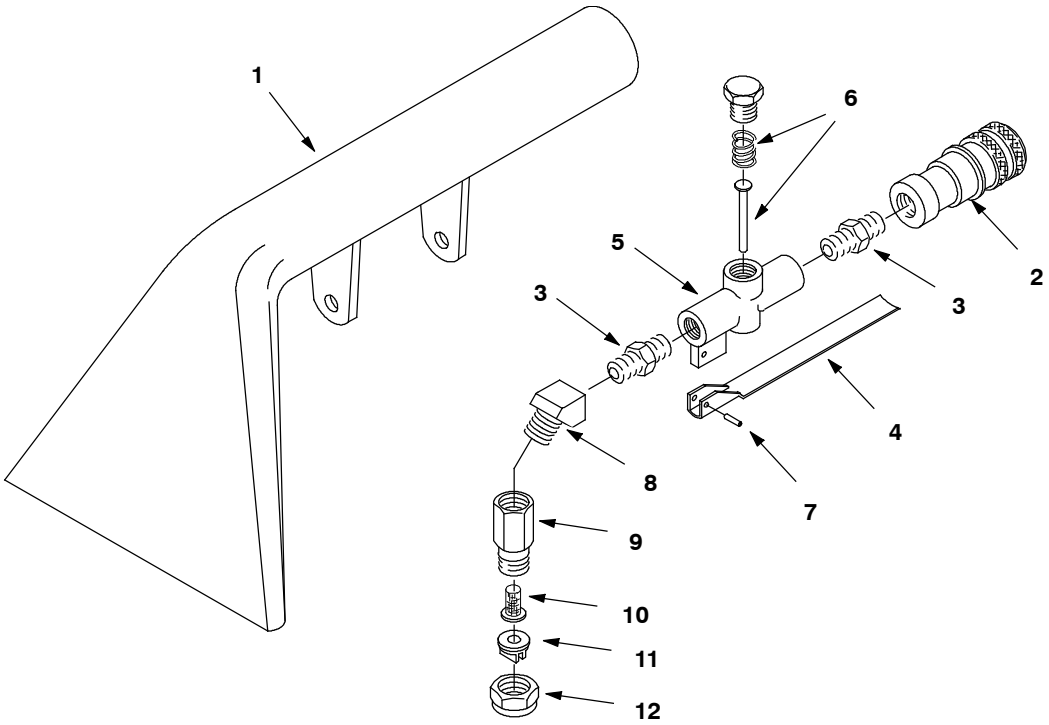

	Ref.	Part No.	Serial Number	Description	Qty.
∇		200505	(00000000-)	Tool, Hand, 127mm 5.0w	1
▲	1	200431.BK	(00000000-)	Tool, Hand, Blk	1
▲	2	150913	(00000000-)	Fitting, Brs, Qdc, Pf04 [Ser60]	1
▲	3	150606	(00000000-)	Fitting, Brs, Str, Pm04/Pm04 X1.38l[Nip]	2
▲	4	200905	(00000000-)	Lever [K- Valve W/ Pin]	1
▲∇	5	210210	(00000000-)	Valve, Water, Flow Cntrl, Pf04/Pf04	1
▲▲	6	190600	(00000000-)	K- Valve Kit, Repair (No Longer Available - Replaced By Assy 210210)	1
▲	7	140609	(00000000-)	Pin, Roll, .187d X 0.56l, Pl	1
▲	8	150403	(00000000-)	Fitting, Brs, E45, Pf04/Pm04 [Taped]	1
▲	9	200992	(00000000-)	Fitting, Brs, Str, Pf02, Swivel	1
▲	10	200996	(00000000-)	Filter, Screen, 100 Mesh, Check Valve	1
▲	11	200965	(00000000-)	Fitting, Brs, Tip [8002, T- Jet]	1
▲	12	200994	(00000000-)	Cap, Nozzle, Spray [#8002]	1

∇ ASSEMBLY

▲ INCLUDED IN ASSEMBLY

HAND TOOL, CREVICE 76 mm (3 in)

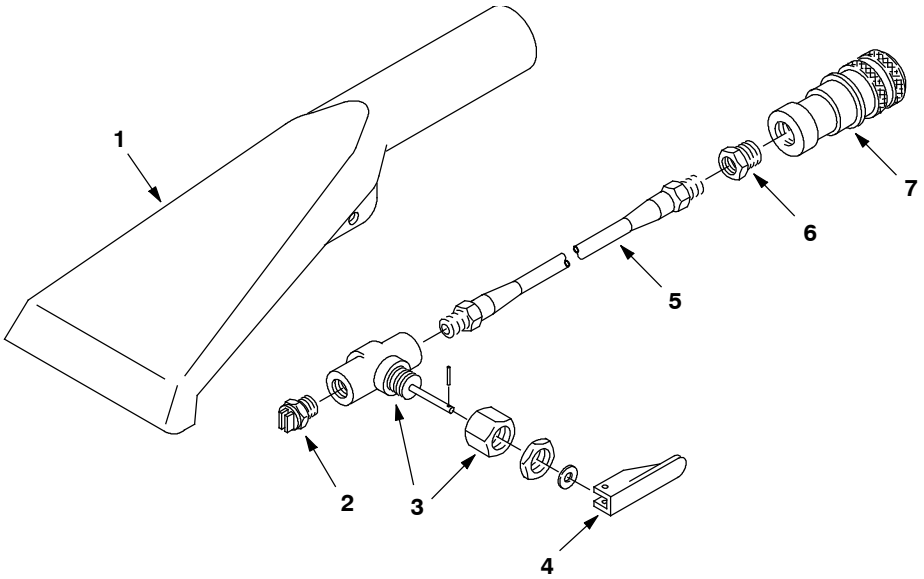

	Ref.	Part No.	Serial Number	Description	Qty.
∇		200517	(00000000-)	Tool [Crevice Lp/Hp Series 60]	1
▲	1	200436.BK	(00000000-)	Tool, Blk [Crevice]	1
▲	2	200975	(00000000-)	Fitting, Brs, Jet [.125 V- Jet]	1
▲	3	210014	(00000000-)	Valve, Water, Toggle, Pf02, W/ Nut	1
▲	4	210020	(00000000-)	Handle, Valve [Positioner]	1
▲	5	160106	(00000000-)	Hose, Soltn, Crevice Tool	1
▲	6	150100	(00000000-)	Fitting, Brs, Str, Pf02/Pm04	1
▲	7	150913	(00000000-)	Fitting, Brs, Qdc, Pf04 [Ser60]	1

∇ ASSEMBLY

▲ INCLUDED IN ASSEMBLY

HAND TOOL, UPHOLSTERY LOW PRESSURE

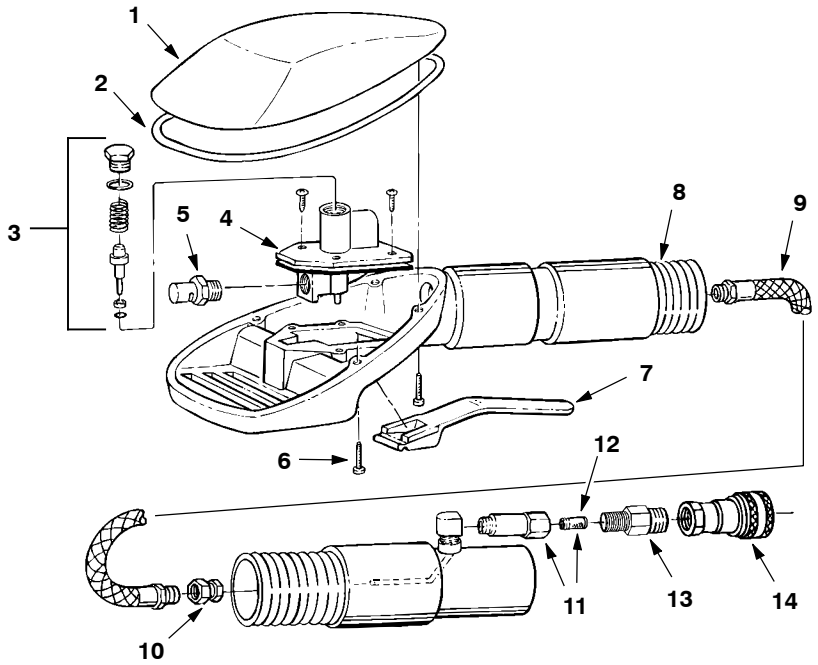

	Ref.	Part No.	Serial Number	Description	Qty.
∇		200540	(00000000-)	Tool [Upholstery Lp Series 60]	1
▲	1	200845	(00000000-)	Cover, Tool [Upholstery]	1
▲	2	200843	(00000000-)	Gasket, Cover	1
▲	3	190631	(00000000-)	Service Kit [Upholstery, Lp]	1
▲	4	210226	(00000000-)	Valve, Water, Solenoid, 120vac Low Press	1
▲	5	200991	(00000000-)	Fitting, Ss, Jet, 1/8k- Jet	1
▲	6	200838	(00000000-)	Screw, #06- 32 X 0.75	4
▲	7	200840	(00000000-)	Trigger Upholstery Tool	1
▲	8	200844	(00000000-)	Hose, Vacuum [Upholstery Tool W/O Cuffs]	1
▲	9	200837	(00000000-)	Hose [Hp Upholstery Tool]	1
▲	10	200848	(00000000-)	Fitting, Brs [3 Pcs]	1
▲	11	200842	(00000000-)	Filter, In- Line, Complt	1
▲	12	200841	(00000000-)	Screen, Fltr, Inline	1
▲	13	150606	(00000000-)	Fitting, Brs, Str, Pm04/Pm04 X1.38l[Nip]	1
▲	14	150913	(00000000-)	Fitting, Brs, Qdc, Pf04 [Ser60]	1

∇ ASSEMBLY

▲ INCLUDED IN ASSEMBLY

HOSES, SOLUTION AND VACUUM

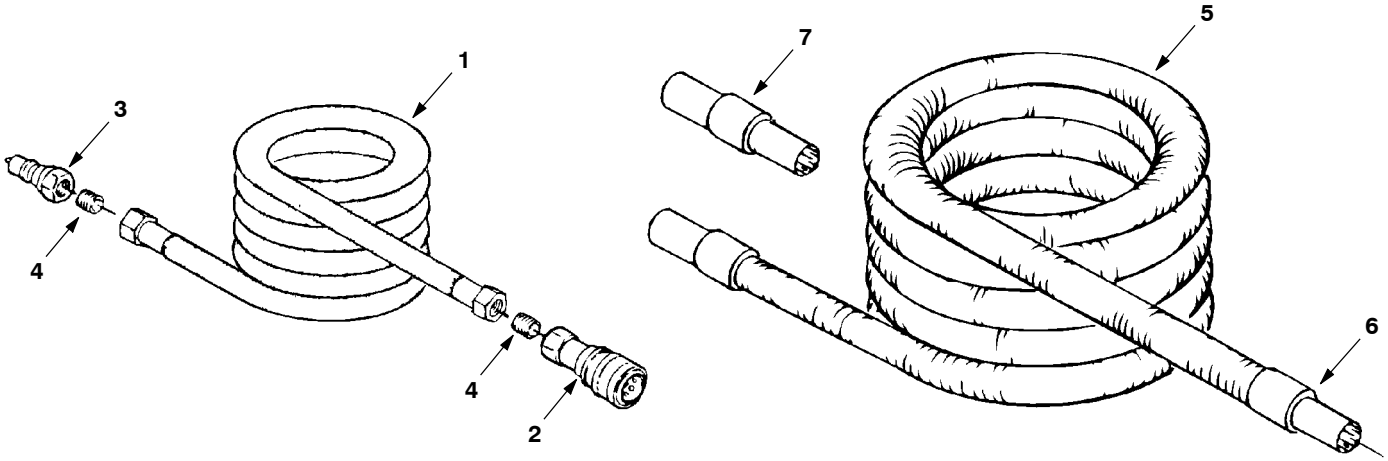

	Ref.	Part No.	Serial Number	Description	Qty.
∇	1	1073341	(00000000-)	Hose Assy, .38id X 15ft, Qdc/Qm [Ser60] (Optional)	1
∇	1	160186	(00000000-)	Hose, Soltn, .38id X 25ft [Series 60,Lp] (Standard)	1
∇	1	160187	(00000000-)	Hose, Soltn, .38id X 50ft [Series 60,Lp] (Optional)	1
▲	2	150913	(00000000-)	Fitting, Brs, Qdc, Pf04 [Ser60]	1
▲	3	150933	(00000000-)	Fitting, Brs, Qdc, Pm04 [Ser60]	1
▲	4	150615	(00000000-)	Fitting, Brs, Str, Pm04, Close, T	2
∇	5	160400	(00000000-)	Hose, Vacuum, 1.50id X 15ft (Optional)	1
∇	5	160401	(00000000-)	Hose Kit, Vacuum, 1.50id X 25ft, 2cuff (Standard)	1
∇	5	160402	(00000000-)	Hose, Vacuum, 1.50id X 50ft (Optional)	1
▲	6	160430	(00000000-)	Cuff, 1.5d Hose, 1.5id	2
	7	12694	(00000000-)	Fitting, Plstc, Str, Bm24/Bm24	1
	N/S	220040	(00000000-)	Bag, Hose, Accssry, 24x36[W/Draw String] (Optional)	1

PUMP-UP CARPET SPRAYER

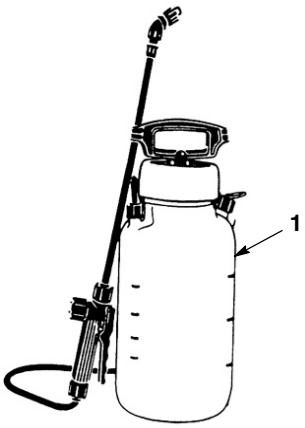

Ref.	Part No.	Serial Number	Description	Qty.
1	605848	(00000000-)	Sprayer 2gal Pumpup Hd	1

∇ ASSEMBLY

▲ INCLUDED IN ASSEMBLY

KIT, CARPET RAKE

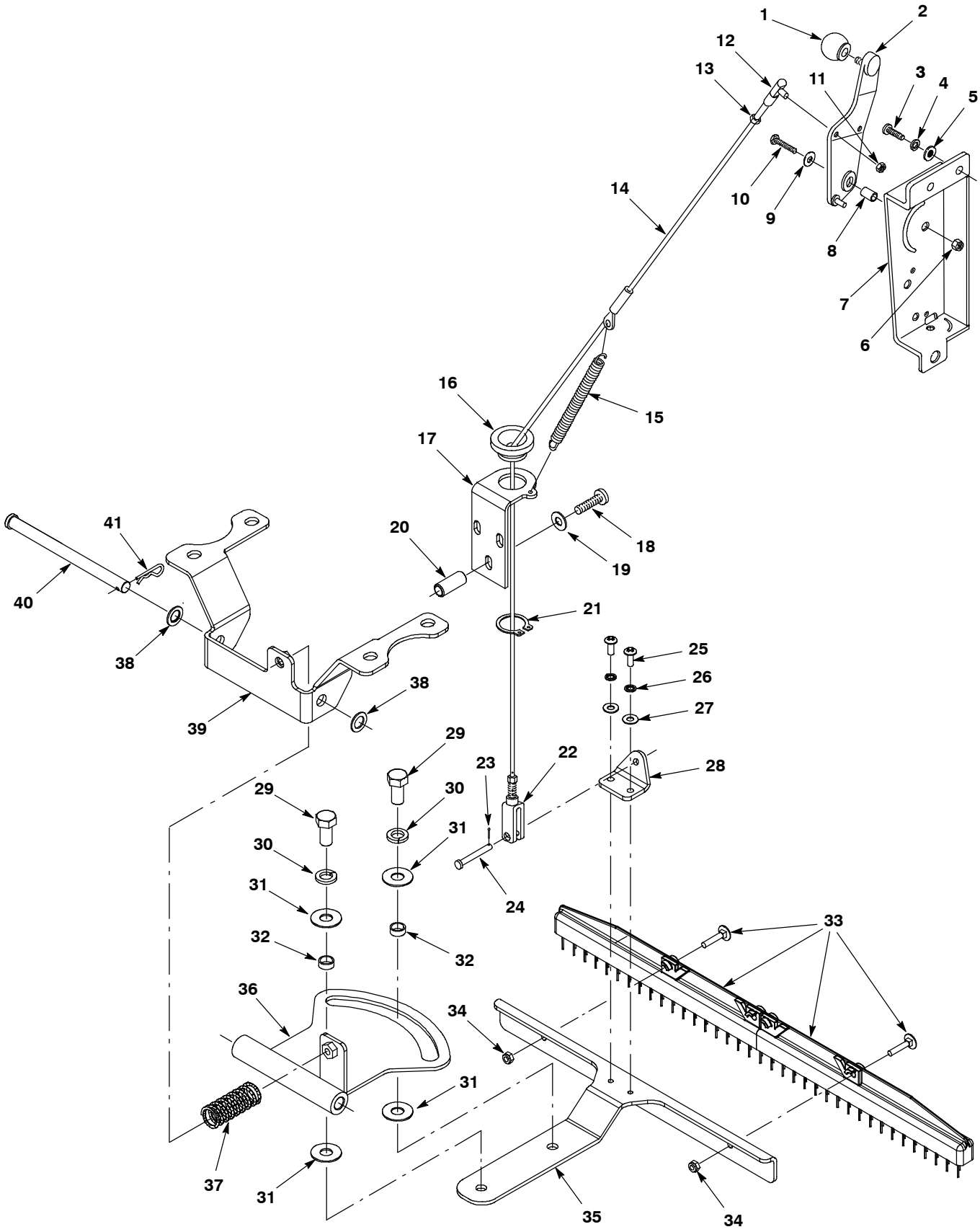

KIT, CARPET RAKE

	Ref.	Part No.	Serial Number	Description	Qty.
∇		9008247	(00000000-)	Kit, Rake, Carpet	1
▲	1	601425	(00000000-)	Knob, Ball, 1.50d, .38- 16 Fem	1
▲	2	1010221	(00000000-)	Lever, Sqge	1
▲	3	16931	(00000000-)	Screw, Hex, M8 X 1.25 X 20, 8.8	3
▲	4	32984	(00000000-)	Washer, Lock, Int, 0.31	3
▲	5	32491	(00000000-)	Washer, Flat, 0.31, Std	3
▲	6	08709	(00000000-	Nut, Hex, Lock, M8 X 1.25, Nl	1
▲	7	612834	(00000000-)	Bracket, Lever, Sqge [5400]	1
▲	8	1014336	(00000000-)	Sleeve, P/M, 0.33b 0.50d 0.6l, Pl	1
▲	9	25732	(00000000-)	Washer, Flat, 0.36b 1.25d .09, Pl	1
▲	10	09011	(00000000-)	Screw, Hex, M8 X 1.25 X 30, Ss	1
▲	11	13513	(00000000-)	Nut, Hex, Lock, .25- 28, Nl	1
▲	12	069760371	(00000000-)	Ball Joint,1/4- 28 Unf	1
▲	13	32899	(00000000-)	Nut, Hex, Jam, .25- 28	1
▲	14	1064154	(00000000-)	Cable, Lift, Sqge	1
▲	15	605063	(00000000-)	Spring, Lever, Sqge	1
▲	16	1009363	(00000000-)	Bushing, Cable	1
▲	17	1064152	(00000000-)	Bracket, Cable Guide	1
▲	18	608324	(00000000-)	Screw, Trs, M6 X 1.00 X 40, Phl, Ss	3
▲	19	140000	(00000000-)	Washer, Flat, 0.28b 0.62d .04, Ss	3
▲	20	383910	(00000000-)	Sleeve, P/M, 0.32b 0.44d 1.1l [430ss]	3
▲	21	621236	(00000000-)	Ring, Retaining, Ext, 0.81d	1
▲	22	605068	(00000000-)	Clevis, Adj, 0.25pin, 0.25- 28 Pl	1
▲	23	08170	(00000000-)	Pin, Cotter, .062 X 0.50	1
▲	24	605070	(00000000-)	Pin, Clevis, 0.25d X 0.79l	1
▲	25	608322	(00000000-)	Screw, Trs, M6 X 1.00 X 16, Phl, Ss	2
▲	26	07515	(00000000-)	Washer, Lock, Int, 0.25, Ss	2
▲	27	140000	(00000000-)	Washer, Flat, 0.28b 0.62d .04, Ss	2
▲	28	1064153	(00000000-)	Bracket, Cable, Sqge Lift	1
▲	29	140237	(00000000-)	Screw, Hex, .50- 13 X 1.00, Ss	2
▲	30	140024	(00000000-)	Washer, Lock, Split, 0.50, Ss	2
▲	31	140045	(00000000-)	Washer, Flat, 0.51b 1.25d .06, Ss	4
▲	32	140139	(00000000-)	Sleeve, P/M, 0.50b 0.63d 0.3l, Pl	2
▲	33	1061617	(00000000-)	Rake, Carpet (Includes Qty 4 Screws)	1
▲	34	32981	(00000000-)	Nut, Hex, Lock, .25- 20, Nl	4
▲	35	1062208	(00000000-)	Bracket, Rake, Pivot	1
▲	36	1062204	(00000000-)	Wldt, Pivot, Lift, Rake	1
▲	37	45261	(00000000-)	Spring, Cmpr, 0.97od .11wir 02.5l	1
▲	38	140058	(00000000-)	Washer, Flat, 0.54b 0.88d .06, Ss [Wand]	2
▲	39	1062219	(00000000-)	Bracket, Mount, Rake	1
▲	40	1064151	(00000000-)	Pin, Clevis, 0.50d X 7.00l	1
▲	41	140626	(00000000-)	Pin, Cotter, Hair, 0.25d .125 Wir	1

∇ ASSEMBLY

▲ INCLUDED IN ASSEMBLY

KIT, SOLUTION SWITCH (S/N 00000000- 10243220)

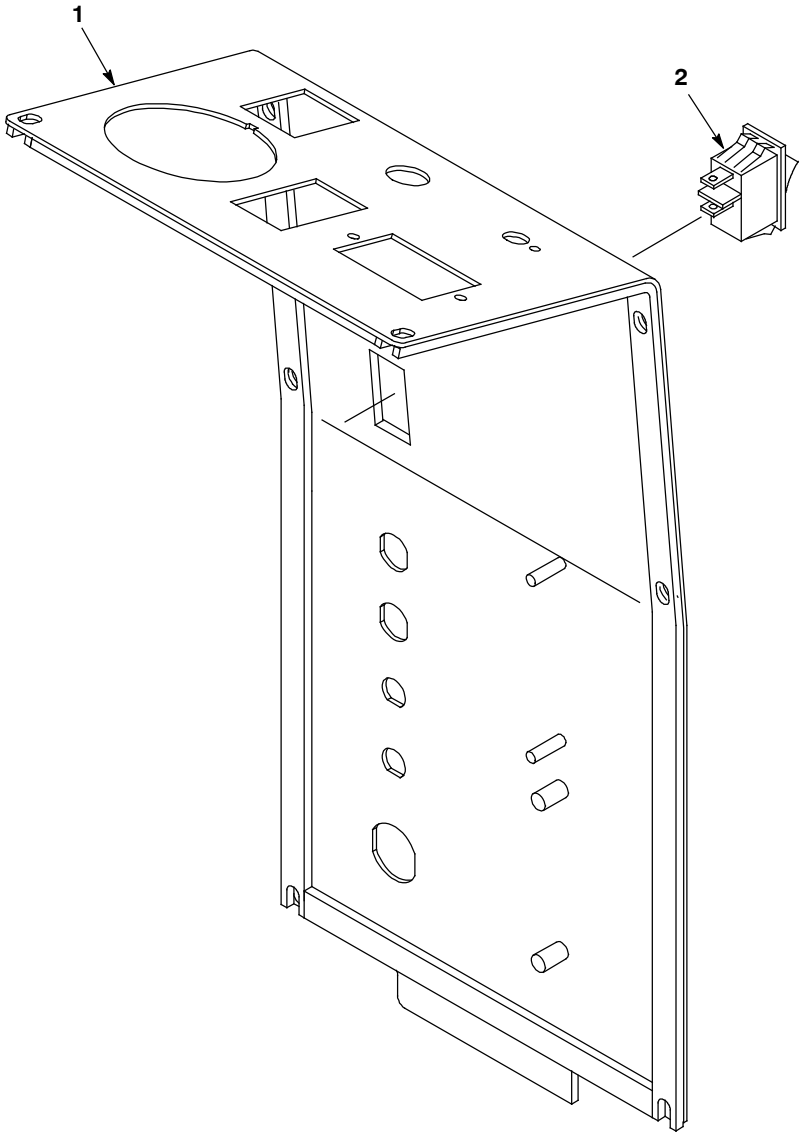

	Ref.	Part No.	Serial Number	Description	Qty.
∇		N/A	(00000000- 10243220)	Switch Kit, Soltn, On- Off, Retrofit[Str] (Kit No Longer Available)	1
▲	1	1024809	(00000000- 10243220)	Panel, Console, Retrofit [Str]	1
▲	2	578005000	(00000000- 10243220)	Switch, Rocker, Spst	1
▲	N/S	1025060	(00000000- 10243220)	Wire, 18ga 25.0l White .25qf /.25qf	1
▲	N/S	1025073	(00000000- 10243220)	Wire, 18ga 21.0l Brown .25qf /.25qm	1

∇ ASSEMBLY

▲ INCLUDED IN ASSEMBLY