i-charge® 9

Battery charger

User manual

Model part No. :
1264257 – Battery Charger, 100-240V 9A (N. America)
1267991 – Battery Charger, 100-240V 9A (EUR/UK)

Tennant Company

10400 Clean Street, Eden Prairie,
MN 55344-2650
Telephone: (800) 553-8033
Internet: www.tennantco.com

Tennant N.V.

Industrielaan 6 5405 AB

P.O. Box 6 5400 AA, Uden -The Netherlands

Europe@tennantco.com

To view, print, download the parts manual visit:
www.tennantco.com/manuals

Revision: 01 (03/2024)

Thank you for purchasing the i-charge® 9. The i-charge 9 is made to charge i-power batteries in a short amount of time. The quick exchange i-power battery system makes our battery powered machines a real cleaning workforce. With 2 sets of i-power batteries you can clean 24/7. Waiting for your i-power batteries to charge is a thing of the past. You can charge your batteries up to 4 times quicker with the i-charge 9! With the i-stack®, the i-charge 9 can be stacked to upload multiple batteries at the same time.

The i-charge 9 is easy to use when you follow the instructions. Please read the user manual carefully. Become familiar with the correct operation and maintenance procedures. Store the manual in a safe place. The manual is an essential part of the i-charge 9 and must be handed over to the new owner upon resale or exchange. Each i-charge 9 has a unique identification number that can be found on the bottom.

.

Purpose of the user manual

The purpose of the user manual is to provide the user with information during the life of the i-charge 9 in such a way that the i-charge 9 is used correctly, efficiently and safely, even in the event of reasonably foreseeable misuse.

The user manual contains instructions regarding:

- personal operator safety;
- intended and non-intended use of the i-charge 9;
- instructions for daily use;
- maintenance instructions;
- storage conditions;
- disposal of the i-charge 9.

These instructions must be considered to avoid risks that could lead to physical and/or material damage.

Target audience

This user manual is intended for operators of the i-charge 9 and their supervisors, as well as partners and importers.

Operators of the i-charge 9

The i-charge 9 may only be operated by a person who:

- has correctly read and understood the instructions in this manual;
- is trained by an experienced operator who has read and understood the instructions in this manual.

Reading guide

The following symbols and terms are used throughout this manual to alert the reader to safety issues and important information:

Symbol	Term	Explanation
	INFORMATION	Read the instructions before using the machine.
	WARNING	Indicates a hazardous situation which, if the safety instructions are not followed, can lead to injuries of the operator or bystanders, light and/or moderate damage to the product or the environment.
	CAUTION	Indicates a hazardous situation which, if the safety instructions are not followed, can lead to light and / or moderate damage to the product or the environment.
	ATTENTION	Indicates a liability situation, where the manufacturer or its partners and affiliates cannot be held accountable for damages caused by non-compliance.
	BATTERIES	Indicates a battery-operated machine, batteries must be charged according to the instructions in this user manual. Batteries must be disposed of according to your local laws and regulations.

Content

Preface 2

Purpose of the user manual 2

Target audience 2

Operators of the i-charge 9 2

Reading guide 3

1 Introduction 5

1.1 Intended use of the product 5

1.2 Non-intended use of the product 5

1.3 Modifications 5

1.4 Specifications 6

1.5 Warranty 7

1.6 Identification 7

2 Description 8

2.1 Battery charge displays 9

3 Safety 10

3.1 General Safety Instructions 10

3.1.1 Batteries 10

3.2 Risks during operation 11

4 Transport and storage 12

5 Assembly and installation 13

5.1 Unboxing 13

5.2 Assembly 14

6 Operation 15

6.1 Before you start 15

6.2 Operation 15

6.2.1 After operation 16

6.3 Cleaning and storage 16

6.3.1 Cleaning 16

6.3.2 Storage 16

7 Maintenance 17

8 Trouble shooting 17

9 Decommissioning and disposal 17

1 Introduction

The i-charge® 9 is easy and safe to use. You will be surprised how fast and effective the i-charge 9 is. This manual helps you get started and explains the operation and maintenance procedure.

This manual is intended for those who work with the i-charge 9 and perform daily maintenance. The manual must be read in full before the first actions. This manual describes the correct method of use, safety measures, maintenance and transport.

The manufacturer continuously improves all their products based on user experience and feedback. Any deviations between the texts and/or images from the manual and your i-charge 9 can therefore arise from the difference in model or from possible changes due to continuous development and innovation.

1.1 Intended use of the product

The i-charge 9 should be used indoors in a dry and well ventilated open environment.

ONLY use original Lithium - Ion batteries provided by the manufacturer.

1.2 Non-intended use of the product

WARNING

Non-intended use can have consequences for the safety of operators and bystanders and will void the warranty on the product.

The i-charge 9 is not intended for use outdoors or in a wet or closed environment.

Do not charge non original batteries or non-rechargeable batteries with the i-charge 9. Alternative products will void the manufacturer's warranty, more importantly they may also cause serious harm to the operator. Non-original batteries, for instance, can burst open.

1.3 Modifications

It is not permitted to make modifications to the design of the i-charge 9 without consultation and permission from the manufacturer. This affects the warranty, see section 1.5.

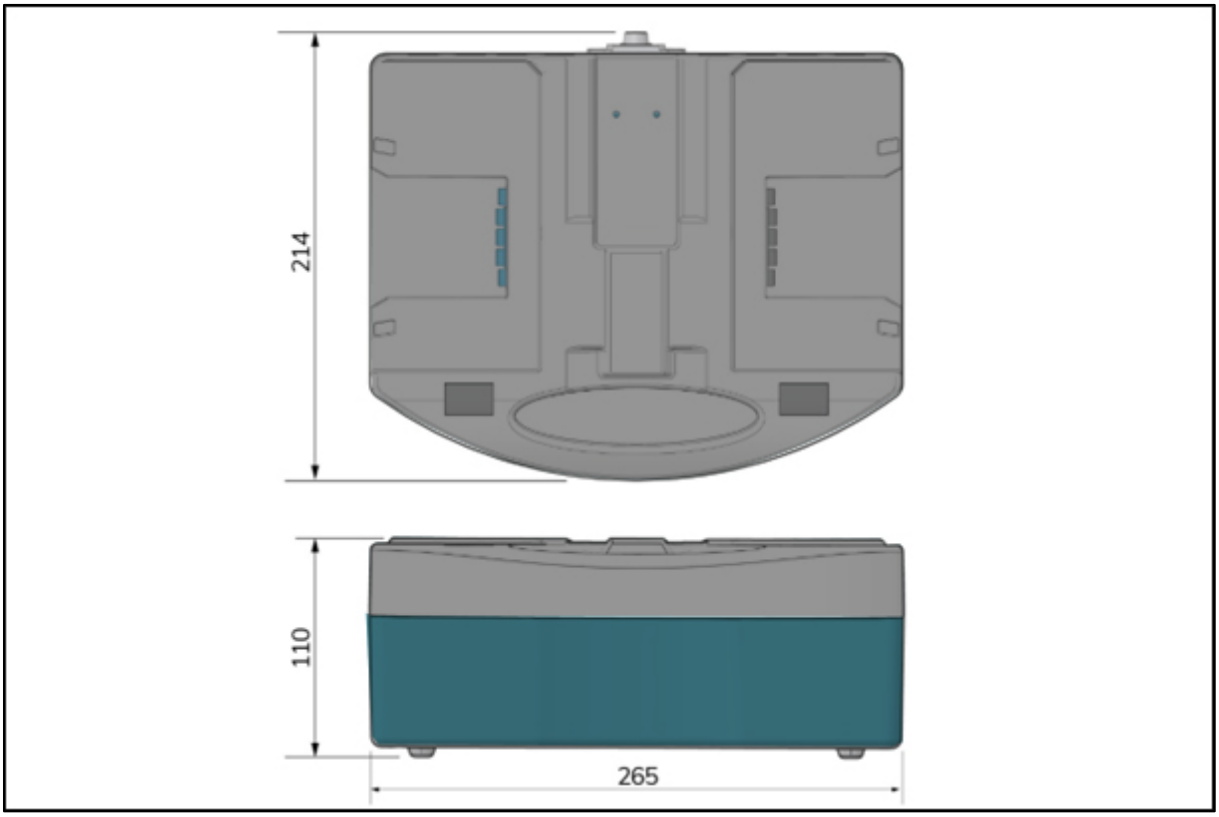

1.4 Specifications

Figure 1

Product size:	265 x 214 x 110 mm
Weight:	1.7 kg | 3.7 lbs
Battery capacity:	2 batteries/63 Hz
Power supply:	100-240 V, 50/60 Hz per side
Output voltage:	DC 29 4 V per side
Charge current:	9 A per side
Standby power:	2 W
Average charging time:	1.5 hour (i-power 14)
Operation temperature and humidity:	10 C - 50 C : 20% - 90% RH, no condensing
Storage temperature and humidity:	10 C - 85 C : 10% - 95% RH, no condensing

1.5 Warranty

The i-charge® 9 should only be operated with the materials supplied. Using alternative supplies may cause damage to the i-charge 9 and may cause a risk to the operator. The use of alternative supplies voids manufacturer's warranty.

1.6 Identification

Each i-charge 9 has a unique serial number that can be found on the bottom of the body. Your i-team partner needs this number when you order parts.

Explanation type plate:

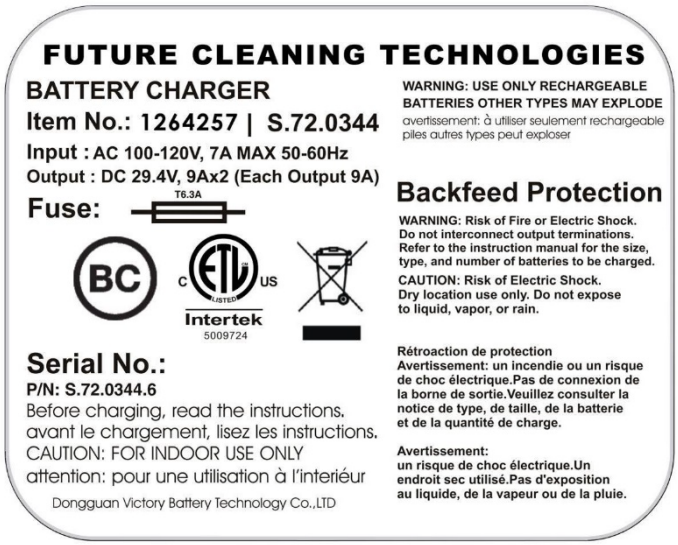

Figure 2

2 Description

The compact i-charge® 9 is designed to charge 2 batteries in parallel.

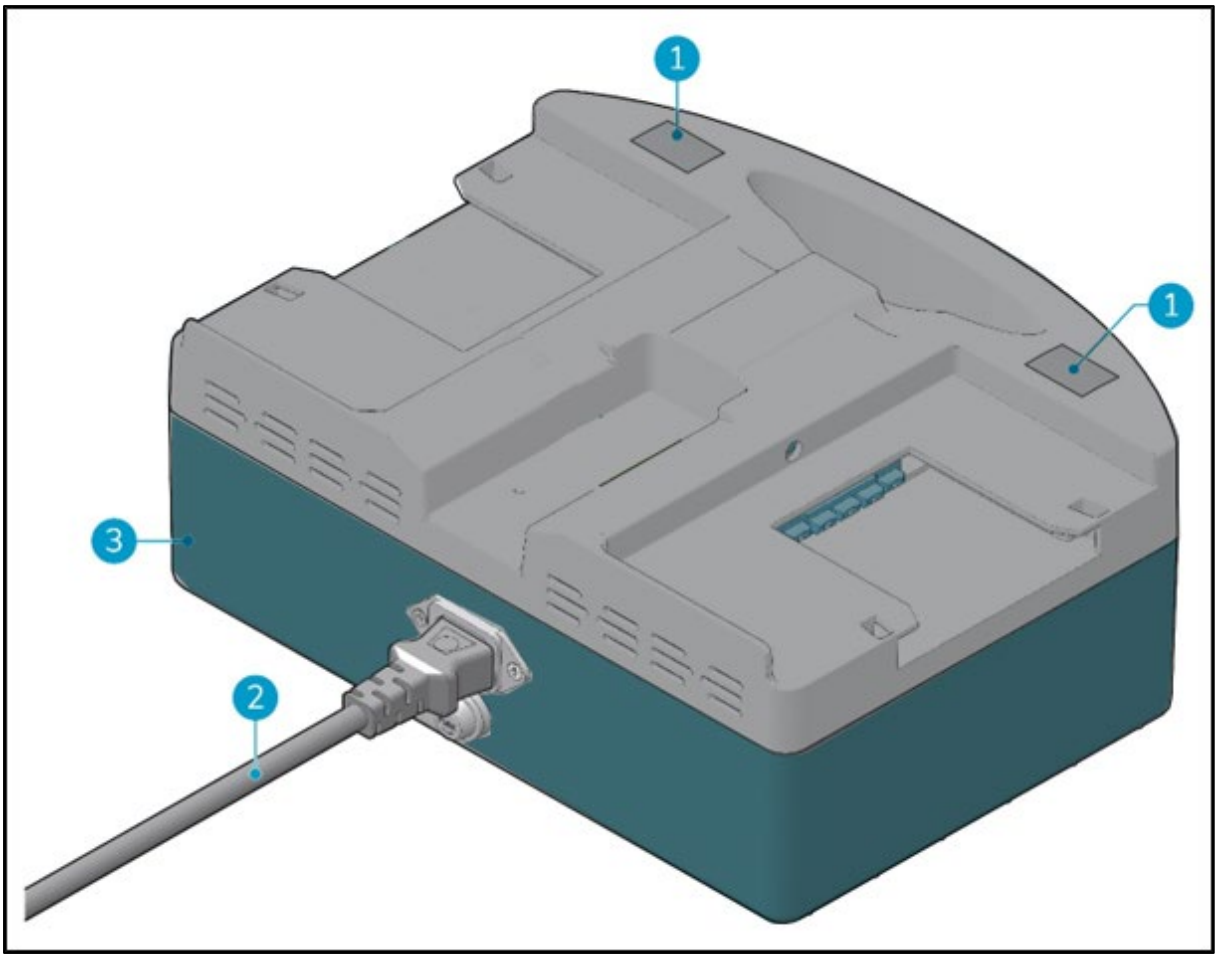

The i-charge 9 consists of:

Figure 3

Legend

1. The battery charge displays.
2. The power cable.
3. The main body.

2.1 Battery charge displays

1. Battery charge displays. When the batteries are charged, the amount of colored bars will go up from one bar that blinks, which indicates that the batteries are almost empty. To three bars that burn continuously, which indicates that the batteries are full and ready to use.

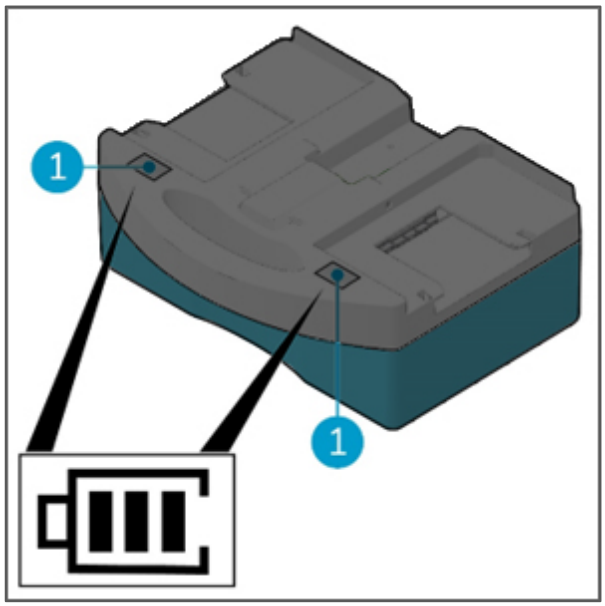

Figure 4

3 Safety

Safety comes first, therefore please take time to read and understand these safety instructions. Improper use can cause harm or void the manufacturer's warranty.

3.1 General Safety Instructions

WARNING

DO NOT operate the i-charge® 9 with wet or moist hands.

3.1.1 Batteries

CAUTION

During normal operation the 24 V batteries cause no safety hazard on their own. Please keep in mind the following safety instructions:

- do not crush, pierce or damage in any way;
- do not heat or incinerate;
- do not short-circuit;
- do not dismantle;
- keep the batteries dry;
- only charge between 5 °C ~ 40 °C / 41 °F ~ 104 °F;
- only use between 5 °C ~ 45 °C / 41 °F ~ 113 °F.

3.2 Risks during operation

CAUTION

Do not operate the i-charge® 9:

- unless you have read and understood this manual;
- under temperatures of 0 C/32 F;
- near flammable dusts, liquids or vapors;
- near flammable liquids like gasoline or oil, acids or volatile substances;
- outdoors or in an explosive environment;
- if it is dirty or wet;
- over electrical floor outlets, to avoid electric shocks;
- if any parts have been damaged or removed.

WARNING

If exposure to any battery chemicals happens, act as follows:

Contact to the eyes:

- flush the eyes with plenty of water for a minimum of 15 minutes, lift the upper- and lower eyelid occasionally;
- seek medical attention.

Inhalation:

- vacate from the exposure environment and move to an environment with fresh air immediately;
- seek medical attention.

Ingestion:

- give at least two glasses of milk or water. Induce vomiting unless the person is unconscious;
- seek medical attention.

- do not block the cooling fan inlet;
- do not remove the warning decals;
- do not use the power cable to unplug- or to carry the i-charge 9;
- do not charge wet or damaged batteries;
- do not cover the i-charge 9 during usage;
- ensure that the main voltage is identical to that mentioned on the identification plate on the i-charge 9;
- only use the i-charge 9 in an environment that is well ventilated and has a good heat dissipation.

4 Transport and storage

CAUTION

The storage environment should not contain corrosive gasses. There should be no magnetic fields. Vibrations should be avoided.

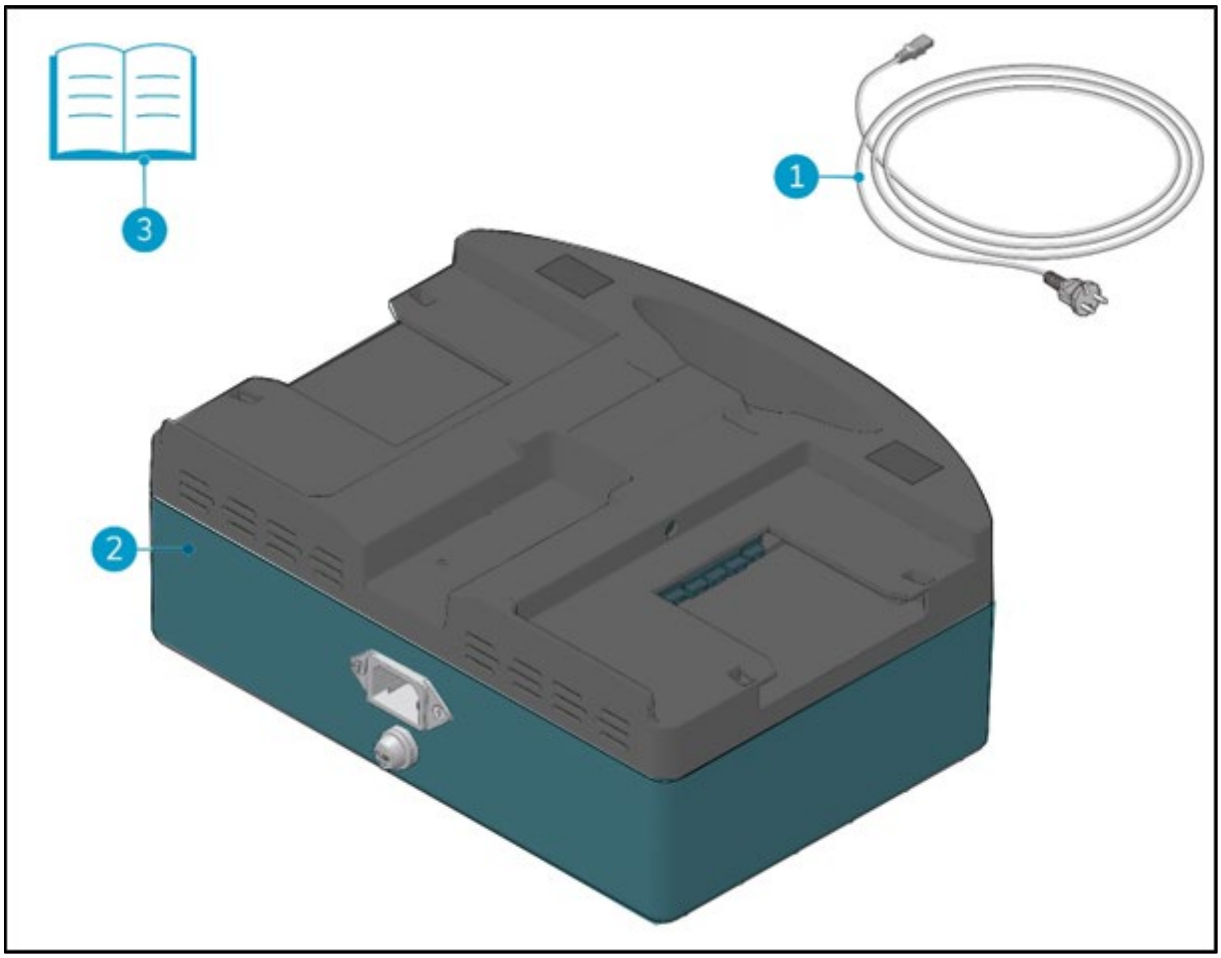

5 Assembly and installation

5.1 Unboxing

The i-charge® 9 is packed in 1 box.

Figure 5

Legend

1. 1x power cable
2. 1x i-charge 9 battery charger
3. 1x this user manual

5.2 Assembly

Connect the power cable (Figure 6, pos 1) to the connector at the back side of the i-charge 9.

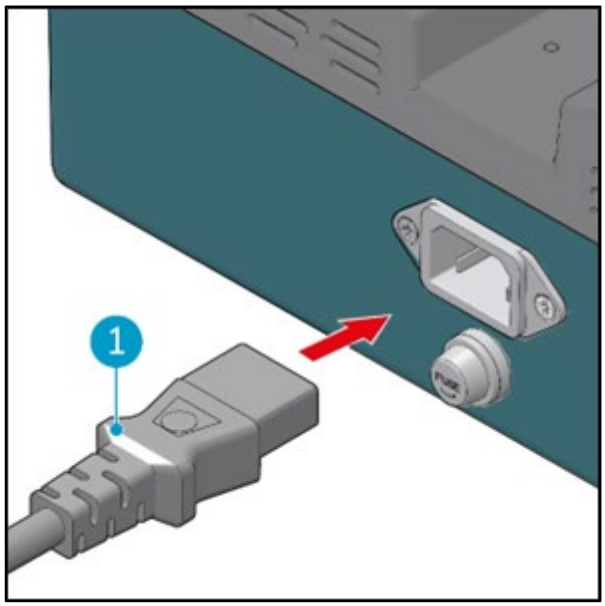

Figure 6

6 Operation

6.1 Before you start

- check the i-charge® 9 for damage;
- check the power cable for damage, pull it through a fiber cloth;
- check the battery for damage.

6.2 Operation

1. Put the main power cable into the wall socket (Figure 7, pos 1).

2. Align each battery with the charging dock (Figure 7, pos 2) and insert each battery, until you hear a "click". The batteries are now fixated and ready for charging.

3. The two displays (Figure 8, pos 1) indicate the charge level of the batteries.

4. When the batteries are fully charged the displays indicate three bars. See also section
   2.1.

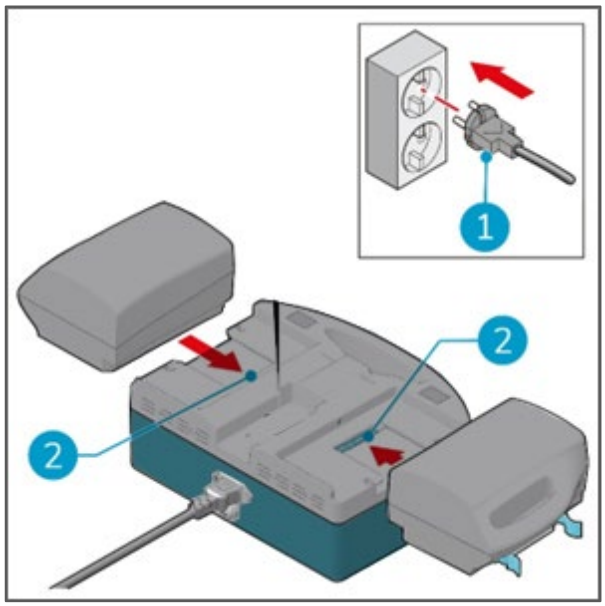

Figure 7

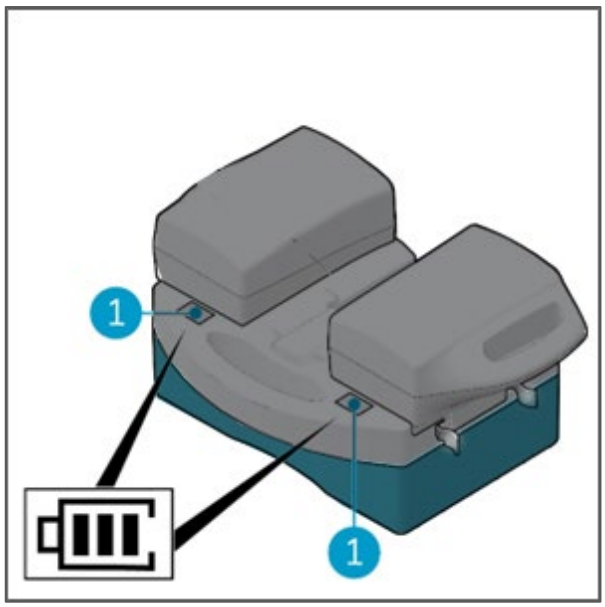

Figure 8

5. Press the plastic clips of the battery (Figure 9, pos 1) slightly towards each other.

6. Pull out the batteries.

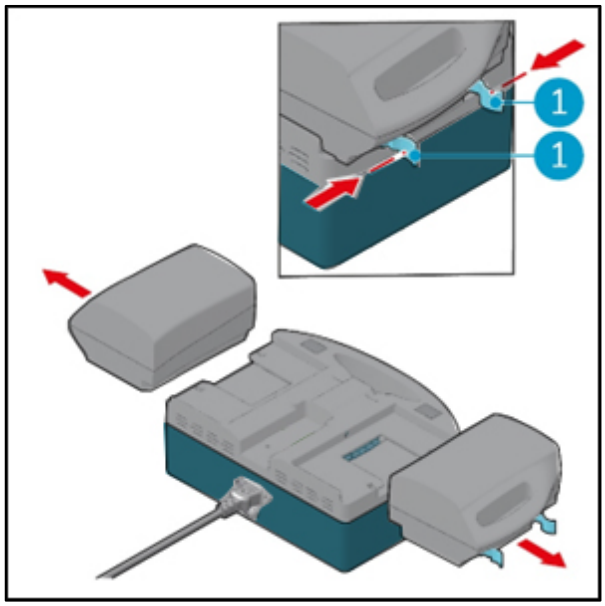

Figure 9

6.2.1 After operation

Wait 10 seconds after charging before you insert a new battery for loading. This will allow the memory of the i-charge® 9 to reset.

6.3 Cleaning and storage

6.3.1 Cleaning

It is recommended to clean the i-charge 9 with a damp cloth every once in a while.

6.3.2 Storage

- store the i-charge 9 in a dry environment;
- batteries can be stored separated from the charger or left on the charger. When left on the charger the batteries will not drain;
- Remove the battery before executing any maintenance task, or before storage.

When the batteries are being charged, do not leave them permanently on the charger.

7 Maintenance

Maintenance and repairs should only been done by authorized personnel.

8 Trouble shooting

Problem	Cause	Solution
No power	Power cable not correctly inserted	Check if power cable is inserted correctly.

9 Decommissioning and disposal

ATTENTION

It is the responsibility of the i-charge® 9 owner to dispose of the product.

At the end-of-life the i-charge 9 still contains valuable resources and needs to be disposed of according to your local laws and regulations regarding recycling of electrical equipment.

Batteries also must be disposed of according to your local laws and regulations regarding recycling of electrical equipment. See also the User Manual of the i-power 9® and the i-power 14®.

The packaging material is recyclable. Please do not dispose of it with household waste. Please recycle it. Old appliances contain valuable materials which can be recycled.

Rechargeable battery packs contain materials which should not be disposed of in landfill. Please dispose of old appliances and batteries at the appropriate collection points.

Tennant Company

10400 Clean Street, Eden Prairie, MN 55344-2650

Telephone: (800) 553-8033

Internet: www.tennantco.com

Tennant N.V.

Industrielaan 6 5405 AB

P.O. Box 6 5400 AA, Uden -The Netherlands

Internet: Europe@tennantco.com

Model: i-charge 9.0