B5

Walk–Behind Battery Burnisher

Parts Manual

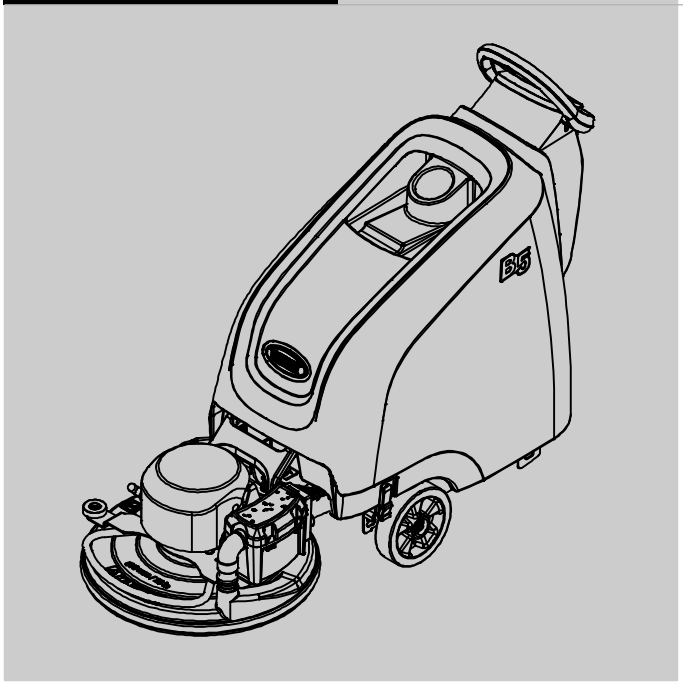

Tennant *True*® Parts
***IRIS*® a Tennant Technology**

Global

For the latest Parts manuals and other language Operator manuals, visit:

www.tennantco.com/manual

9011477
Rev. 11 (09-2025)

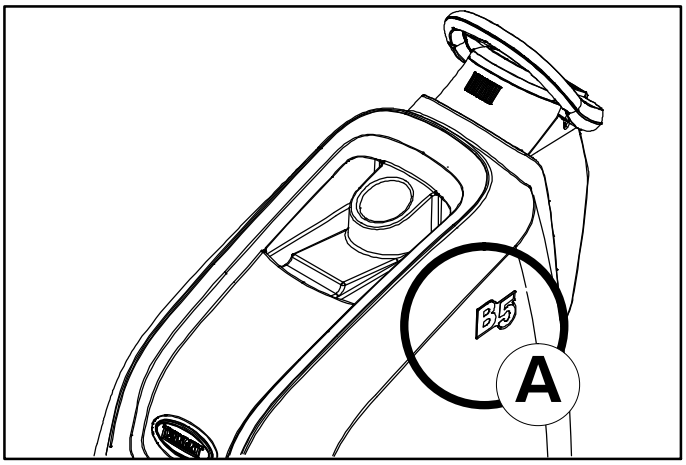

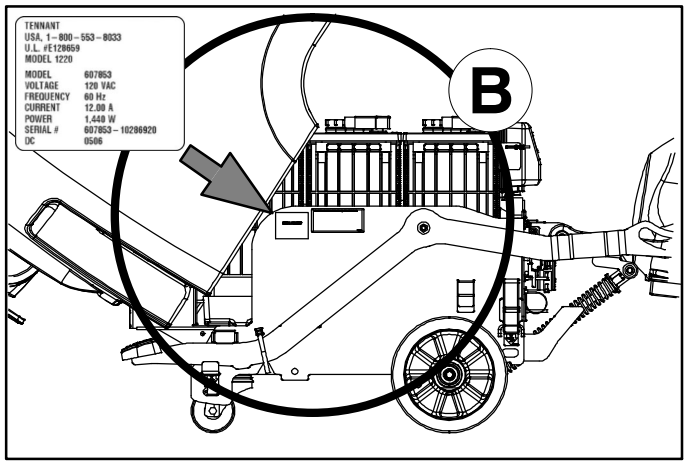

Ref	Part No.	Serial Number	Description	Qty.
1	82681	(000000–)	Bracket Wldt, Lpg Mount	1
∇ 2	63810	(000000–)	Latch Assy, Lpg Tank Mtg, W/Nut	4
▲ 3	51839	(000000–)	Nut Adjustable, Lpg Tank Mtg	2
4	49263	(000000–)	Tie, Cable	3
	82556	(000000–001039)	Bracket, Vaporizer	1
	54930	(000000–)	Vaporizer, LPG	1

D

C

HOW TO ORDER PARTS – See diagram above

Only use TENNANT Company supplied or equivalent parts. Parts and supplies may be ordered online, by phone, by fax or by mail.

Follow the steps below to ensure prompt delivery.

1. **(A)** Identify the machine model.
2. **(B)** Identify the machine serial number from the data label.
3. **(C)** Ensure the proper serial number is used from the parts list.
4. Identify the part number and quantity. Do not order by page or reference numbers.
5. Provide your name, company name, customer ID number, billing and shipping address, phone number and purchase order number.
6. Provide detail shipping instructions.

(D) ∇ – identifies an assembly
▲ – identifies parts included in assembly

Please fill out at time of installation for future reference.

Model No. – _____

Serial No. – _____

Machine Options – _____

Sales Rep. – _____

Sales Rep. phone no. – _____

Customer ID Number – _____

Installation Date – _____

Tennant Company
10400 Clean Street
Eden Prairie, MN 55344–2650 USA
Phone: (800) 553–8033

www.tennantco.com

Tennant Company N.V.
Industrielaan 6 5405 AB
P.O. Box 6 5400 AA
Uden–The Netherlands

europe@tennantco.com
www.tennantco.com

Specifications and parts are subject to change without notice.

Copyright © 2014–2025 TENNANT Company, Printed in U.S.A.

BG

КАК ДА ПОРЪЧВАМЕ ЧАСТИ - Вижте схемата по-горе

Използвайте само части, доставени от TENNANT или техни еквиваленти. Частите и доставките могат да се поръчат онлайн, по телефон, факс или по пощата.

Следвайте долупосочените стъпки, за да си осигурите бърза и точна доставка.

1. **(A)** Посочете модела на машината.
2. **(B)** Посочете серийния номер на машината от табелката с техническите данни.
3. **(C)** Уверете се, че сте използвали точния сериен номер от списъка с части.
4. Посочва номера на частта и количеството. Не поръчвайте части според страницата или референтните номера.
5. Посочете своето име, наименованието на фирмата, клиентския номер, адреса за получаване на сметката и доставката, тел.номер и номера на поръчката.
6. Посочете подробни инструкции за доставката.

(D) ▽ – посочва начин на монтаж
▲ – посочва частите, включени в монтажа

Моля, попълнете по време на монтажа за бъдеща справка.

Модел Э – _____
Сериен Э – _____
Опции на машината – _____
Търговски представител – _____
Тел. Э на търг. представител – _____
Клиентски Э – _____
Дата на монтаж – _____

CN

如何订购部件 – 参见下表

仅使用 TENNANT 公司提供的或同等部件。部件和供应可以在线订购，通过电话、传真或邮件订购。
请遵循下面的步骤确保及时交付。

1. (A) 确定机器型号。
2. (B) 从数据标签确定机器序列号。
3. (C) 确保使用部件列表中的正确序列号。
4. 确定部件号和数量。
   不要按页面或参考编号订购。
5. 提供您的姓名、公司名称、客户 ID 号、付帐和送货地址、电话号码和采购单编号。
6. 提供详细的送货说明。

(D) ▽ – 确定组件
▲ – 确定组件中包含的组件

请在安装时填写供未来参考。

型号 – _____
序列号 – _____
机器选项 – _____
销售代表- _____
销售代表电话号码 – _____
客户 ID 编号 – _____
安装日期 – _____

CZ

OBJEDNÁVÁNÍ DÍLŮ - Viz schéma výše.

Používejte pouze díly dodané společností TENNANT Company nebo jim odpovídající. Díly a materiál lze objednat online, telefonem, faxem nebo poštou.

Aby bylo zajištěno rychlé dodání, postupujte podle kroků uvedených níže.

1. **(A)** Zjistěte model stroje.
2. **(B)** Zjistěte sériové číslo stroje z výrobního štítku.
3. **(C)** Použijte správné sériové číslo ze seznamu dílů.
4. Určete číslo a množství dílů.
   Neobjednávejte podle stran nebo referenčních čísel.
5. Uveďte jméno, název společnosti, číslo ID zákazníka, fakturační a dodací adresu, telefonní číslo a číslo objednávky.
6. Uveďte podrobné pokyny pro dodání.

(D) ▽ – označuje sestavu
▲ – označuje díly v sestavě

Vyplňte během sestavování pro budoucí potřebu.

Číslo modelu – _____
Sériové číslo – _____
Doplňky zařízení – _____
Obchodní zástupce – _____
Tel. č. obchodního zástupce – _____
Číslo ID zákazníka – _____
Datum instalace – _____

DE

BESTELLEN VON ERSATZTEILEN – Siehe oben stehendes Diagramm.

Verwenden Sie nur von TENNANT gelieferte oder gleichwertige Ersatzteile. Ersatz- und Verschleißteile können online, telefonisch, per Fax oder per E-Mail bestellt werden.

Befolgen Sie für eine umgehende Lieferung die folgenden Schritte.

1. **(A)** Geben Sie das Modell der Maschine an.
2. **(B)** Geben Sie die Seriennummer der Maschine an (auf dem Datenaufkleber).
3. **(C)** Achten Sie darauf, dass die richtigen Seriennummer aus der Ersatzteilliste verwendet wird.
4. Geben Sie die Ersatzteilnummer und die Menge an.
   Bestellen Sie nicht nach Seitenzahl oder Referenznummern.
5. Geben Sie Ihren Namen, den Firmennamen, die Kundennummer, die Rechnungs- und Lieferadresse, die Telefonnummer und die Einkaufsauftragsnummer an.
6. Erteilen Sie genaue Versandanweisungen.

(D) ▽ – steht für eine Einheit
▲ – steht für Einzelteile einer Einheit

Bitte bei der Inbetriebnahme als Referenzangabe ausfüllen.

Modellnr. – _____
Seriennr. – _____
Maschinenoptionen – _____
Verkäufer – _____
Telefonnummer des Verkäufers – _____
Kundennummer – _____
Installationsdatum – _____

DK

BESTILLING AF RESERVEDELE – Se ovenstående tabel.

Brug kun reservedele, der er fremstillet af TENNANT, eller dele af tilsvarende kvalitet. Reservedele og tilbehør kan bestilles online, pr. telefon, pr. fax eller pr. brev.

Følg nedenstående trin for at sikre hurtig levering.

1. **(A)** Identificér maskinmodellen.
2. **(B)** Identificér maskinens serienummer på datamærkaten.
3. **(C)** Kontrollér, at det rigtige serienummer bruges i reservedelslisten.
4. Identificér reservedelsnummeret og antallet. Bestil ikke efter side– eller referencenumre.
5. Angiv dit navn, firmanavn, kunde–id–nummer, faktureringsadresse og leveringsadresse, telefonnummer og indkøbsordrenummer.
6. Angiv detaljerede instruktioner til forsendelse.

(D) ▽ – identificerer en enhed
▲ – identificerer reservedele i en enhed

Udfyld venligst på installationstidspunktet til fremtidig brug.

Modelnr. – _____
Serienr. – _____
Maskinekstraudstyr – _____
Salgskonsulent. – _____
Salgskonsulentens tlf. – _____
Kunde–id–nr. – _____
Installationsdato – _____

EE

KUIDAS VARUOSI TELLIDA – vaadake alltoodud joonist

Kasutage ainult TENNANT Company poolt tarnitud või samaväärseid varuosi. Varuosi ja tarvikuid saab tellida Interneti, telefoni, faksi või posti teel.

Kiire kohaletoimetamise tagamiseks järgige alltoodud juhiseid.

1. **(A)** Märkige masina mudel.
2. **(B)** Märkige andmesildil olev masina seerianumber.
3. **(C)** Veenduge, et olete valinud varuosade loendist õige seerianumbri.
4. Märkige varuosa number ja kogus. Ärge tellige lehekülje– või viitenumbri alusel.
5. Märkige oma nimi, ettevõtte nimi, kliendinumber, arveldus– ja saatmisaadress, telefoninumber ja ostutellimuse number.
6. Lisage täpsed saatmisjuhised.

(D) ∇ – tähistab komplekti
▲ – tähistab komplektis olevaid osii

Palun täitke paigaldamise ajal edaspidiseks viitamiseks.

Mudeli number – _____
Seerianumber – _____
Masina lisavarustus – _____
Müügiesindus – _____
Müügiesinduse telefoninumber – _____
Kliendinumber – _____
Paigaldamise kuupäev – _____

ES

CÓMO SOLICITAR PIEZAS – Consulte el diagrama anterior.

Utilice sólo las piezas suministradas por TENNANT Company o piezas equivalentes. Puede solicitar las piezas a través de internet, por teléfono, por fax o por correo.

Siga los siguientes pasos para que la entrega sea rápida.

1. **(A)** Indique el modelo de máquina.
2. **(B)** Indique el número de serie de la etiqueta de datos.
3. **(C)** Asegúrese de que indica el número de serie correcto de la lista de piezas.
4. Indique la cantidad y el número de la pieza. No realice el pedidoindicando el número de página o el de referencia.
5. Incluya su nombre, el nombre de la empresa, el ID de cliente, las direcciones de envío y facturación, el número de teléfono y el número del pedido de compra.
6. Facilite instrucciones de envío.

(D) ▽ – identifica un conjunto
▲ – identifica piezas de un conjunto

Rellene estos datos cuando realice la instalación para utilizarlos como referencia en el futuro.

Nº modelo – _____
Nº serie – _____
Opciones de la máquina – _____
Vendedor – _____
Nº teléfono vendedor – _____
Nº cliente – _____
Fecha de instalación – _____

FI

KUINKA VARAOSIA TILATAAN – katso kuvaa yllä.

Käytä ainoastaan TENNANTIN toimittamia tai niitä vastaavia varaosia. Voit tilata varaosia ja tarvikkeita internetistä, puhelimitse, faksilla tai sähköpostilla.

Noudata seuraavia ohjeita täsmällisen toimituksen varmistamiseksi.

1. **(A)** Katso koneen malli.
2. **(B)** IKatso koneen sarjanumero sen tunnustarrasta.
3. **(C)** Varmista, että osaluettelosta, että käytät oikeaa sarjanumeroa.
4. Katso osanumero ja kappalemäärä. Älä tilaa ilmoittamalla sivu– tai viitenumeroita.
5. Ilmoita nimesi, yrityksesi nimi, asiakasnumero, laskutus– ja toimitusosoite, puhelinnumero ja ostotilauksen numero.
6. Ilmoita yksityiskohtaiset toimitusosoitteet.

(D) ▽ – tarkoittaa kokoonpanoa
▲ – tarkoittaa kokoonpanoon sisältyviä osia

Ole hyvä ja täytä ottaessasi koneen käyttöön myöhempiä tarpeita varten.

Mallinumero – _____
Sarjanumero – _____
Koneen lisävarusteet – _____
Myyntiedustaja – _____
Myyntiedustajan puhelinnumero – _____
Asiakasnumero – _____
Asennuspäivä – _____

FR

COMMENT COMMANDER DES PIÈCES DÉTACHÉES – Voir le schéma ci–dessus.

Utilisez uniquement des pièces fournies par la société TENNANT ou équivalentes. Les pièces et fournitures peuvent être commandées en ligne, par téléphone, fax, ou par courrier.

Suivez les étapes ci–dessous pour assurer une livraison rapide.

1. **(A)** Identifiez le modèle de la machine.
2. **(B)** Identifiez le numéro de série de la machine, à partir de l'étiquette signalétique.
3. **(C)** Assurez–vous que le numéro de série correct est utilisé à partir de la liste de pièces détachées.
4. Identifiez le numéro de pièce et la quantité. Ne commandez pas par page ou numéros de référence.
5. Fournissez votre nom, le nom de votre société, votre numéro d'identification de client, l'adresse de facturation et d'expédition, le numéro de téléphone et le numéro du bon de commande.
6. Fournissez des instructions d'expédition détaillées.

(D) ▽ – identifie un assemblage
▲ – identifie les pièces composant l'assemblage

A remplir au moment de l'installation à titre de référence.

Nº du modèle – _____
Nº de série – _____
Options de la machine – _____
Agent commercial – _____
Nº tél. de l'agent commercial – _____
Numéro d'identification client – _____
Date d'installation – _____

GR

ΤΡΟΠΟΣ ΠΑΡΑΓΓΕΛΙΑΣ ΑΝΤΑΛΛΑΚΤΙΚΩΝ - Βλ. παραπάνω διάγραμμα.

Χρησιμοποιήστε μόνο ανταλλακτικά παρεχόμενα από την TENNANT Company ή ισοδύναμα. Τα ανταλλακτικά και αναλώσιμα μπορούν να παραγγελθούν online, τηλεφωνικά, με φαξ ή ταχυδρομικά.

Ακολουθήστε τα παρακάτω βήματα για να εξασφαλίσετε την έγκαιρη αποστολή τους.

1. **(A)** Βρείτε το μοντέλο μηχανήματος.
2. **(B)** Βρείτε τον αριθμό σειράς του μηχανήματος από την ετικέτα στοιχείων.
3. **(C)** Βεβαιωθείτε ότι χρησιμοποιείται ο σωστός αριθμός σειράς από τον κατάλογο ανταλλακτικών.
4. Βρείτε κωδικό ανταλλακτικού και ποσότητα. Μην παραγγέλνετε βάσει σελίδας ή αριθμών αναφοράς.
5. Δώστε το όνομα σας, όνομα εταιρείας, ID (κωδικό) πελάτη, διεύθυνση τιμολόγησης και αποστολής, αριθμό τηλεφώνου και αριθμό εντολής προμήθειας.
6. Δώστε λεπτομερείς πληροφορίες αποστολής.

(D) ▽ – υποδηλώνει υποσύστημα
▲ – υποδηλώνει τα μέρη που περιλαμβάνονται στο υποσύστημα

Παρακαλούμε συμπληρώστε κατά την ώρα της εγκατάστασης για μελλοντική αναφορά.

Αρ. Μοντέλου – _____
Αρ. σειράς – _____
Επιλογές Μηχανήματος – _____
Εκπ. πωλήσεων – _____
Τηλ. εκπροσώπου πωλήσεων – _____
Αριθμός πελάτη – _____
Ημερομηνία εγκατάστασης – _____

HU

HOGYAN RENDELJÜNK ALKATRÉSZEKET - Lásd: fenti diagramm.

Kizárólag TENNANT vagy azzal egyenértékű cserealkatrészeket használjon. Az alkatrészeket és anyagokat meg lehet rendelni az Interneten keresztül, vagy telefonon, faxon és e-mailben.

A pontos szállítás érdekében kövesse az alábbi lépéseket.

1. **(A)** Adja meg a gép típusát.
2. **(B)** Az adatcímke alapján adja meg a gép gyártási számát.
3. **(C)** Ügyeljen arra, hogy a megfelelő gyártási számot válassza ki az alkatrészlistáról.
4. Adja meg a rendelési számot és a mennyiséget. A rendeléshez ne az oldalszámot vagy a hivatkozási számot használja.
5. Adja meg a nevét, a cége nevét, az ügyfélazonosító számát, a számlázási és szállítási címét, a telefonszámát és a rendelési számot.
6. Adjon részletes szállítási utasításokat.

(D) ▽ – a jel csomagra utal
▲ – a jel a csomagban található alkatrészekre utal

A későbbi visszakeresések érdekében kérjük, hogy a rovatokat az első üzembehelyezéskor töltse ki.

Típusszám – _____
Gyártási szám. – _____
A gép felszereltsége – _____
Kereskedelmi képviselő – _____
Kereskedelmi képviselő telefonszáma – _____
Ügyfél azonosító száma – _____
Üzembehelyezés dátuma – _____

IT

COME ORDINARE LE PARTI – Vedere schema precedente.

Utilizzare solo ricambi forniti da TENNANT o equivalenti. Ricambi e forniture possono essere ordinati online, per telefono, via fax o per posta elettronica.

Per ottenere una consegna rapida, seguire i passaggi indicati di seguito.

1. **(A)** Identificare il modello della macchina.
2. **(B)** Identificare il numero di serie della macchina dall'etichetta dei dati.
3. **(C)** Utilizzare il numero di serie corretto presente nell'elenco delle parti di ricambio.
4. Identificare numero di parte e quantità. Non ordinare per numero di pagina o di riferimento.
5. Fornire nome del contatto, nome della società, numero di ID cliente, indirizzo di fatturazione e di spedizione, numero di telefono e numero di ordine di acquisto.
6. Fornire istruzioni dettagliate per la spedizione.

(D) ▽ – identifica un gruppo
▲ – identifica parti comprese in un gruppo

Compilare il modulo al momento dell'installazione per poterlo consultare in futuro in caso di necessità.

N. Modello – _____
N. Serie – _____
Opzioni della macchina – _____
Venditore – _____
Tel. venditore – _____
Numero ID cliente – _____
Data di installazione – _____

JP

パーツの発注方法 ?上記の図を参照してください

TENNANT社製のパーツまたは同等品のみをお使いください。
パーツやサプライ品のご注文は、オンライン、電話、FAX、または手紙でお願いいたします。
確実にお届けできるように、以下の情報お知らせください。

1. **(A)** 製品のモデル名をお知らせください。
2. **(B)** 製品のデータラベルに印刷されているシリアル番号をお知らせください。
3. **(C)** パーツリストを参照して、シリアル番号が正しいかご確認ください。
4. パーツ番号と数量をお知らせください。マニュアル/カタログのページ番号や参照番号でのご注文はご遠慮ください。
5. お客様のお名前、会社名、顧客ID番号、請求/発送先住所、電話番号、注文書番号をお知らせください。
6. 発送に関するご希望があれば、明記してください。

(D) ▽ – アセンブリを示します
▲ – アセンブリに含まれるパーツを示します

後日確認できるように、設置時に記入してください。

モデルNo. – _____
シリアルNo. – _____
製品のオプション– _____
販売代理店 – _____
販売代理店の電話番号 – _____
顧客ID番号 – _____
設置日 – _____

LT

KAIP UŽSISAKYTI DALIS — žr. diagramà viršuje

Naudokite tik "Tennant" kompanijos tiekiamas arba lygiavertes joms dalis. Dalis galite užsisakyti internetu, telefonu, faksu bei elektroniniu paštu.

Kad užsakymas būtų greitai įvykdytas, laikykitės išvardytų taisyklių.

1. **(A)** Nurodykite mašinos modelį.
2. **(B)** Norodykite mašinos serijos numerį, kurį rasite ant duomenų žymės.
3. **(C)** Įsitikinkite, kad nurodomas tikslus serijos numeris iš dalių sàrašo.
4. Nurodykite dalies numerį ir reikiamà kiekį. Neužsakinėkite pagal puslapius ar nuorodos numerius.
5. Nurodykite savo vardà, kompanijos pavadinimà, kliento ID numerį, sàskaitos išrašymo ir vežimo adresà, telefono numerį ir pirkimo užsakymo numerį.
6. Nurodykite išsamias gabenimo instrukcijas.

(D) ▽ — žymi sistemà
▲ — nurodo sistemos dalis

Prašome užpildyti montavimo metu, siekiant gauti informacijà ateityje.

Modelio nr. — _____
Serijos nr. — _____
Mašinos parinktys — _____
Prekybos atstovas — _____
Komivojažieriaus tel. nr. — _____
Pirkėjo ID numeris — _____
Sumontavimo data — _____

LV

KĀ PASŪTĪT REZERVES DETAĻAS — Skat. diagrammu iepriekš

izmantojiet tikai TENNANT Company piegādātās vai tām līdzvērtīgas rezerves detaļas. Daļas un piegādi var pasūtīt internetā, pa tālruni, pa faksu vai pastu.

Lai nodrošinātu savlaicīgu piegādi, sekojiet zemāk aprakstītajiem soļiem.

1. **(A)** Nosakiet mašīnas modeli.
2. **(B)** Nosakiet mašīnas sērijas numuru uz tehnisko datu uzlīmes.
3. **(C)** Pārliecinieties, ka tiek uzrakstīts attiecīgais sērijas numurs no detaļu saraksta.
4. Nosakiet detaļas numuru un skaitu. Veicot pasūtījumus neatsaucieties uz lappušu vai norādes numuriem.
5. Uzrakstiet savu vārdu, uzņēmuma nosaukumi, klienta identitātes numuru, adresi rēķina piesūtīšanai un piegādei un pirkuma pasūtījuma numuru.
6. Sniedziet detalizētu informāciju par piegādi.

(D) ▽ — nosaka ierīci i
▲ — nosaka detaļas, kas ir komplektā ar ierīci

Veicot uzstādīšanu, lūdzam pierakstīst attiecīgo informāciju izmantošanai turpmāk.

Modeļa Nr. — _____
Sērijas Nr. — _____
Iekārtas papildaprīkojums— _____
Pārdošanas pārst. — _____
Pārdošanas pārst. tālr. Nr. — _____
Klienta identitātes numuru— _____
Uzstādīšanas datums— _____

NL

HOE ONDERDELEN TE BESTELLEN – Zie schema hierboven.

Gebruik alleen onderdelen die door TENNANT Company zijn geleverd of soortgelijke onderdelen. Onderdelen en voorraden kunnen online, per telefoon, fax of schriftelijk besteld worden.

Volg de stappen hieronder om een juiste levering te garanderen.

1. **(A)** Bepaal het machinemodel.
2. **(B)** Lees het serienummer van de machine af van het gegevenslabel.
3. **(C)** Zorg dat het juiste serienummer wordt gebruikt uit de onderdelenlijst.
4. Bepaal het artikelnummer en het aantal. Bestel niet aan de hand van pagina's of referentienummers
5. Geef uw naam, bedrijfsnaam, klantnummer, factuur– en leveringsadres, telefoonnummer en bestelnummer op.
6. Geef gedetailleerde leveringsinstructies op.

(D) ▽ – geeft een eenheid aan
▲ – geeft de onderdelen van de eenheid aan

Vul tijdens installatie de onderstaande gegevens in voor eventueel toekomstig gebruik.

Modelnr. – _____
Serienr. – _____
Machine–opties – _____
Verkoopvert. – _____
Telnr. verkoopvert. – _____
Klantnummer – _____
Installatiedatum – _____

NO

HVORDAN BESTILLE DELER – Se diagram over.

Bruk kun deler levert av TENNANT Company eller ekvivalente deler. Deler og forsyninger kan bestilles online, per telefon, per faks eller per post.

Følg trinnene under for å sikre rask levering.

1. **(A)** Angi maskinmodellen.
2. **(B)** Angi maskinens serienummer fra typeskiltet.
3. **(C)** Forsikre deg om at korrekt serienummer brukes fra delelisten.
4. Angi delenummer og antall. Bestill ikke ut fra side– eller referansenumre.
5. Angi ditt navn, firmanavn, kunde–ID–nummer, fakturerings– og forsendelsesadresse, telefonnummer og innkjøpsordrenummer.
6. Angi detaljerte forsendelsesinstruksjoner.

(D) ▽ – angir en delegruppe
▲ – angir deler inkludert i en delegruppe

Fyll ut ved installasjonstidspunkt for fremtidig bruk.

Modellnr. – _____
Serienr.. – _____
Maskinens tillegg – _____
Salgsrep. – _____
Salgsrep. telefonnr. – _____
Kunde–ID–nummer – _____
Installasjonsdato – _____

PL

JAK ZAMAWIAĆ CZĘŚCI - patrz schemat powyżej.

Należy używać wyłącznie części dostarczanych przez firmę TENNANT Company lub równoważnych. Części i dostawy mogą być zamawiane online, przez telefon, faksem lub pocztą.

Aby zapewnić szybką dostawę, należy przestrzegać następujących wskazówek.

1. **(A)** Określić model maszyny.
2. **(B)** Określić numer seryjny maszyny znajdujący się na tabliczce znamionowej.
3. **(C)** Odszukać ten numer seryjny w wykazie części.
4. Określić numer części i ilość. Nie zamawiać na podstawie numeru strony lub liczby porządkowej wykazu.
5. Podać swoje nazwisko, nazwę firmy, numer identyfikacyjny klienta, adres dostawy i dostarczenia rachunku, numer telefonu i numer zamówienia zakupu.
6. Podać dokładne instrukcje dotyczące dostawy.

(D) ▽ – oznacza zespół
▲ – oznacza część w zespole

Prosimy wpisać datę instalacji do późniejszego wykorzystania.

Nr modelu– _____
Nr seryjny – _____
Opcje maszyny – _____
Przedst. sprzedaży – _____
Nr tel. przedst. sprzed. – _____
Nr ident. klienta – _____
Data instalacji – _____

PT G

COMO ENCOMENDAR PEÇAS – Consulte o diagrama acima.

Utilize apenas peças fornecidas pela TENNANT Company ou equivalentes. As peças e consumíveis podem ser encomendados online, por telefone, fax ou correio.

Siga os passos abaixo para garantir uma entrega rápida.

1. **(A)** Identifique o modelo da máquina.
2. **(B)** Identifique o número de série da máquina que se encontra na etiqueta de dados.
3. **(C)** Certifique–se de que usa o número de série correcto da lista de peças.
4. Identifique o número de produto e a quantidade. Não encomende através de números de página ou de referência.
5. Forneça o seu nome, o nome da empresa, o número de ID do cliente, os endereços de facturação e entrega, o número de telefone e o número da nota de encomenda.
6. Forneça instruções de entrega detalhadas.

(D) ▽ – identifica uma unidade
▲ – identifica peças incluídas numa unidade

Preencha na altura da instalação para futura referência.

Modelo nº – _____
Nº de série – _____
Opções da máquina – _____
Vendedor – _____
Telefone do vendedor – _____
Número de ID do cliente – _____
Data de instalação – _____

RU

КАК ЗАКАЗАТЬ ЗАПЧАСТИ - См. схему ниже.

Используйте только запчасти, поставляемые компанией TENNANT или их аналоги. Запасные части и расходные материалы можно заказать в режиме онлайн, телефоном, факсом или электронной почтой.

Для своевременной доставки следуйте описанным ниже инструкциям.

1. **(A)** Укажите модель машины.
2. **(B)** Укажите серийный номер машины, обозначенный на табличке технических данных.
3. **(C)** Удостоверьтесь, что надлежащий серийный номер перечислен в списке запчастей.
4. Укажите номер детали и нужное количество. Не используйте номера страниц или ссылок.
5. Укажите свое имя, название компании, идентификационный номер покупателя, расчетный адрес и адрес доставки, телефонный номер и номер заказа на покупку.
6. Укажите подробные сведения о доставке.

(D) ▽ – означает узел
▲ – обозначает деталь узла

Во время установки заполните, пожалуйста, эти сведения для того, чтобы ссылаться в дальнейшем.

Модель Э – _____
Серийный Э – _____
Опции машины – _____
Торговый представитель – _____
Телефон торгового представителя – _____
Идент. номер покупателя – _____
Дата установки – _____

SE

BESTÄLLNING AV RESERVDELAR – Se ovanstående schema.

Använd endast delar från Tennant Company eller likvärdiga. Delar och material kan beställas online, telefoniskt, per fax eller post.

Följ nedanstående steg för en snabb leverans.

1. **(A)** Identifiera maskinens modell.
2. **(B)** Identifiera maskinens serienummer på typskylten.
3. **(C)** Kontrollera att rätt serienummer används från dellistan.
4. Identifiera artikelnumret och mängden. Beställ inte med hjälp av sido– eller referensnummer.
5. Uppge ditt namn, företagets namn, kundens ID–nummer, faktura– och leveransadress, telefonnummer och ordernumret vid inköp.
6. Ge detaljerade transportanvisningar.

(D) ▽ – identifierar en modul
▲ – identifierar delar som ingår i en modul

Fyll i vid installation och spar för framtida bruk.

Modellnr. – _____
Serienr. – _____
Tilvalsutrustning – _____
Försäljare – _____
Försäljarens tel.nr. – _____
Kundnummer – _____
Installationsdatum – _____

SK

POSTUP PRI OBJEDNÁVANÍ ČASTÍ - Pozri vyššie uvedený diagram.

Využívajte výhradne dielce dodané spoločnosťou TENNANT, alebo ich ekvivalenty. Dielce a položky je možné objednať online, telefonicky, faxom, alebo poštou.

Na zabezpečenie promptného doručenia sa riaďte nasledovnými krokmi.

1. **(A)** Identifikujte model stroja.
2. **(B)** Z etikety s údajmi identifikujte sériové číslo stroja.
3. **(C)** Ubezpečte sa, že ste zadali správne sériové číslo zo zoznamu dielcov.
4. Identifikujte číslo dielu a množstvo. Neobjednávajte pomocou čísel strán, alebo referenčných čísel.
5. Zadajte Vaše meno, meno spoločnosti, ID číslo zákazníka, fakturačnú a prepravnú adresu, telefónne číslo a objednávacie číslo dielu.
6. Uveďte podrobné prepravné pokyny.

(D) ▽ – identifikuje sadu
▲ – identifikuje časti sady

Vyplňte prosím pri inštalácii pre prípad potreby v budúcnosti.

č. modelu – _____
Sériové č. – _____
Zvláštne príslušenstvo stroja – _____
Obchodné zastúpenie – _____
Obch. zastúpenie tel. č. – _____
ID č. zákazníka – _____
Dátum inštalácie – _____

SL

NAROČANJE NADOMESTNIH DELOV - glejte zgornjo sliko.

Uporabljajte samo originalne nadomestne dele Tennant ali enakovredne dele. Dele in potrošni material lahko naročite prek spleta, po telefonu, faksu ali pošti.

Za zagotovitev čimbolj hitre dostave sledite spodnjim navodilom.

1. **(A)** Ugotovite model stroja.
2. **(B)** Na ploščici s podatki poiščite serijsko številko stroja.
3. **(C)** Poskrbite, da na seznamu nadomestnih delov poiščete pravilno serijsko številko.
4. Poiščite številko dela in potrebno količino. Pri naročilih ne navajajte strani ali referenčne številke.
5. Navedite svoje ime, ime podjetja, ID številko stranke, naslova za dostavo in izdajo računa, telefonsko številkoin številko naročila.
6. Navedite podrobna navodila za dostavo.

(D) ▽ – označuje sklop
▲ – označuje dele sklopa

Prosimo, da ob vgradnji izpolnite te podatke, da vam bodo v prihodnje na voljo.

Št. modela – _____
Serijska številka – _____
Dodatna oprema stroja – _____
Prodajni predstavnik – _____
Telefonska št. prodajnega predstavnika – _____
Številka stranke – _____
Datum vgradnje – _____

TR

PARÇALARIN SİPARİŞ EDİLMESİ - Yukarıdaki şemaya bakın.

Yalnızca TENNANT Company'den sağlanan veya eşdeğerde parçalar kullanın. Parça veya sarf malzemeleri çevrimiçi olarak, telefonla, faksla veya postayla sipariş edilebilir.

Zamanında teslimatı sağlamak için aşağıdaki adımları izleyin.

1. **(A)** Makine modelini belirtin.
2. **(B)** Veri etiketinden makine seri numarasını belirtin.
3. **(C)** Parça listesinden uygun seri numarasının kullanıldığından emin olun.
4. Parça numarasını ve miktarını belirtin. Sayfa veya referans numaralarını kullanarak sipariş vermeyin.
5. Adınızı, şirketinizin adını, müşteri kimlik numaranızı, faturalama ve sevkıyat adreslerini, telefon numarasını ve satın alma siparişi numarasını belirtin.
6. Ayrıntılı sevkıyat talimatlarını belirtin.

(D) ▽ – bir tertibatı belirtir
▲ – tertibattaki parçaları belirtir

İleri tarihlerde başvurmak için lütfen kurulum sırasında doldurun.

Model No. - _____
Seri No. - _____
Makine Seçenekleri - _____
Satış Temsilcisi - _____
Satış Temsilcisi telefon no. - _____
Müşteri Kimlik Numarası - _____
Kurulum Tarihi - _____

STANDARD PARTS

GENERAL RECOMMENDED MAINTENANCE ITEMS 10
COVER GROUP 12
FRAME GROUP, PUSH 14
FRAME GROUP, DRIVE 16
HEAD GROUP, 510 MM (20 IN) 18
HEAD LIFT GROUP 20
DOWN PRESSURE GROUP, AUTOMATED 22
DOWN PRESSURE GROUP, MECHANICAL . . . 24
DUST CONTROL GROUP, ACTIVE 26
DUST CONTROL GROUP, PASSIVE 28
ELECTRICAL COMPONENTS GROUP 30
LOWER CONSOLE GROUP, OFF–BOARD CHARGER 32
LOWER CONSOLE GROUP, ON–BOARD CHARGER 34
HANDLE GROUP, BASE, PUSH 36
HANDLE GROUP, BASE, PROPEL 38
HANDLE GROUP, POWER, PROPEL 40
BATTERY GROUP, 185AH C20 WET LEAD ACID 42
BATTERY GROUP, 168AH C5 WET LEAD ACID (EUROPE) 44
BATTERY GROUP, 225AH C20 WET LEAD ACID 46
BATTERY GROUP, 245AH C20 AGM SEALED . 48
BATTERY GROUP, 210AH C5 AGM SEALED (EUROPE) 50
MANUAL BATTERY WATERING SYSTEM (S/N 11025937–) 52
HYDROLINK® BATTERY WATERING SYSTEM KIT (S/N 00000000–11025936) 54
BATTERY WATERING SYSTEM (FOR BATTERY 1215207 – EUROPE) 56
IRIS® TELEMETRY GROUP (S/N 00000000 – 11120705) 58
LABEL GROUP 60
PARKING BRAKE GROUP 61
DOCUMENTATION GROUP (ONLINE ONLY) . . . 62
ELECTRICAL DIAGRAM, PUSH MODEL 64
ELECTRICAL DIAGRAM, DRIVE MODEL 70
WIRE HARNESS, TELEMETRY 75
WIRE HARNESS, MAIN, PUSH MODEL 76
WIRE HARNESS, MAIN, PUSH MODEL – CONT'D 77
WIRE HARNESS, MAIN, DRIVE MODEL 78
WIRE HARNESS, MAIN, DRIVE MODEL – CONT'D 79
WIRE HARNESS, CONSOLE, PUSH MODEL . . 80
WIRE HARNESS, CONSOLE, DRIVE MODEL . . 81
WIRE HARNESS, BAIL SWITCH 82
WIRE HARNESS, KEY SWITCH 83
WIRE HARNESS, BATTERY/CHARGER CABLE 84

GENERAL RECOMMENDED MAINTENANCE ITEMS

	Part No.	Serial Number	Description	Qty.
	1207285	(00000000–)	Latch, Draw, Rbr, W/ Keeper, Yellow	2
	1205533	(00000000–)	Damper	1
	1203776	(00000000–)	Cover, Pedal	1
	71579	(00000000–)	Strap, Static, W/Grommet, .19 1.1w 25.0l	1
	9012767	(00000000–)	Caster Kit, Afmkt, W/ Hdwr	1
	1223724	(11047953–)	Wheel, Scrbr, 8.00d, W/ Brg (Push Model)	2
	1223913	(10849232–11047952)	Wheel, Scrbr, 213mm, W/ Brg (Push Model)	2
	1218755	(10790232–10849231)	Wheel, Scrbr, 213mm, W/ Brg (Push Model) (Replaced By 1223913 – Order Qty 2)	2
	1202505	(00000000–10790231)	Wheel, W/ Brg, 213mm (Push Model) (Replaced By 1223913 – Order Qty 2)	2
	1223582	(11047953–)	Wheel, Scrbr, 8.00d, W/ Taper (Drive Model)	2
	1223583	(10817425–11047952)	Wheel, Scrbr, 213mm, W/ Taper (Drive Model)	2
	1218753	(10771448–10817424)	Wheel, Scrbr, 213mm, W/ Taper (Drive Model) (Replaced by 1223583 – Order Qty 2)	2
	1020688	(00000000–10771447)	Wheel, Scrbr, 213mm, W/ Taper (Drive Model) (Replaced by 1223583 – Order Qty 2)	2
∇	1206634	(00000000–)	Transaxle, 24vdc [458h–2100 Asi]	1
▲	1021167	(00000000–)	Key, Woodruff, 5mm	2
▲	612880	(00000000–)	Joint, Transaxle, Replmt	2
▲∇	1212352	(00000000–)	Motor, Transaxle, 24vdc, Ul	1
▲▲	1212351	(00000000–)	Brush, Kit, Carbon, Transaxle, Ul (1 Pkg = 4 Brushes)	1
∇	1210910	(00000000–)	Motor, Ele, 24–60vdc, 3900rpm, 6.00hp#	1
▲	1212017	(00000000–)	Brush Assy, Carbon, Afmkt	1
▲	00928	(00000000–)	Key, Sq, 0.25 X 0.25, 1.00l	1
	9012768	(00000000–)	Wheel Kit, Bmpr, Afmkt, W/ Hdwr	1
∇	1210491	(00000000–)	Driver Assy, Pad, 20d	1
▲	32506	(00000000–)	Device, Centering, Rh Pad Retainer	1
▲	1205787	(00000000–)	Collar, Locking, Pad Driver, 6.1”	1
	1208033	(00000000–)	Skirt Assy, Shrd, 20.0d	1
	611788	(00000000–)	Pad, 20.0[Burnish, Hairblend,1pick=1ctn] (Qty 5 Pads)	1
∇	9012779	(00000000–)	Arm, Lift, Head, Afmkt, W/Bearings	1
▲	9012780	(00000000–)	Bearing Kit, 12mmb 16mmd 12mmw, Qty=4	1
	1203378	(00000000–)	Pin, Spring, .50d 1.00b	1
	1205700	(00000000–)	Actuator, 36vdc, 60mm Strk, 2sw, 350n	1
	1205304	(00000000–)	Spring, Cmpr, 1.378od .177wir 3.95l	1
	1203333	(00000000–)	Spring, Cmpr, 1.314od .145wir 10.85l	1
	607275	(00000000–)	Hose, Vacuum, 1.50id X 040.0l, 2cuff,E90	1
	9012781	(00000000–)	Fan Kit, Vacuum, Afmkt, W/ Gasket	1
	1203349	(00000000–)	Gasket, Vac Motor	1
	1203162	(00000000–)	Filter, Hepa (Active Dust Control)	1
	1204900	(00000000–)	Hose, Assy, 1.50 Id	1
	1210869	(00000000–)	Bag, Dust, Paper (1 Pkg = 10 Bags) (Standard)	1
	1208744	(00000000–)	Bag, Dust, Cloth (Optional for Passive Dust Control Only)	1
	1205971	(00000000–)	Gasket, Cover, Circuitboard	1
∇	9012782	(00000000–)	Circuitboard Kit, Bridge, Afmkt, W/Strap	1
▲	1205845	(00000000–)	Circuitboard, Silpad [1/2 Bridge, Lower]	1
	9012783	(00000000–)	Circuitboard Kit, Base, Afmkt, W/ Strap (For Models w/ mechanical pad pressure and passive dust control)	1
	9012796	(00000000–)	Circuitboard Kit, Option, Afmkt, W/Strap (For Models w/ automated pad pressure and/or active dust control)	1

∇ ASSEMBLY

▲ INCLUDED IN ASSEMBLY

GENERAL RECOMMENDED MAINTENANCE ITEMS

	Part No.	Serial Number	Description	Qty.
	1210283	(00000000–)	Box, Wire [Ferrite, Emi Filter] (No Longer Available – Replaced by Cable 1072935 or 1072372 Includes Ferrite)	2
	1207893	(00000000–)	Switch, Push, Snap Action, 25a [No]	1
	1064184	(00000000–)	Circuitbreaker, 02.5a, Resetable	1
	1064188	(00000000–)	Circuitbreaker, 15.0a, Resetable	1
	383725	(00000000–)	Circuitbreaker, 30.0a, Resetable	1
	9012826*	(00000000–)	Controller, Drive, Afmkt (Drive Model)	1
	1205323	(00000000–)	Switch, 0.1a, Spdt [Micro, Straight]	1
	1205781	(00000000–)	Spring, Return, Bail	1
∇	1072939	(00000000–)	Cable, Assy [B7/B5, Ground]	1
▲	130155	(00000000–)	Connector, Battery, 6ga 50a, Gray[2cont]	1
	1215716	(00000000–)	Switch, 0.1a, Spdt[Micro, Gold Contacts]	1
∇	1011402	(00000000–)	Switch, Key	1
▲	1017696	(00000000–)	Key Set, Replmt [F/Keyswitch 1011402]	1
	1064038	(00000000–)	Gauge, Hourmeter, 05–277 Volt, Ac / Dc	1
	1011735	(00000000–)	Switch, Safety, Shutoff	1
	1234365	(00000000–)	Dial, Range, Speed	1
	1246392	(00000000–)	Potentiometer [100k, 1 Turn, Multi–Mach]	1
	1209730	(00000000–)	Cap, Toggle, Direction	1
	1209673	(00000000–)	Switch Assy, Toggle, Direction	1
	1205496	(00000000–)	Hook, Cord	2
∇	1208644	(00000000–)	Charger, 36vdc, 25a 85–265vac [Offboard] (180–250 AH Wet Lead Acid Batteries)	1
∇	9012740	(00000000–)	Charger, 36vdc 25a [P/N 1208644, #31] (200–350 AH AGM Batteries)	1
∇	9012739	(00000000–)	Charger, 36vdc 25a [P/N 1208644, #03] (260–360 AH Wet Lead Acid Batteries)	1
▲	130155	(00000000–)	Connector, Battery, 6ga 50a, Gray[2cont]	1
∇	1202585	(00000000–)	Charger, 36vdc 25a 115–240vac [On–Board]	1
▲	130155	(00000000–)	Connector, Battery, 6ga 50a, Gray[2cont]	1
	1073882	(00000000–)	Cord, Power, 16/3, 15a, 15ft Blk [Us]	1
	1032820	(00000000–)	Cord, Power, Blk [4.5meter, Uk]	1
	1032849	(00000000–)	Cord, Power, Blk [4.5meter, Ce]	1
	1026325	(00000000–)	Cord, Power, 1.0mm2/3 Blk[2.5meter, Aus]	1
	1026330	(00000000–)	Cord, Power, 1.0mm2 [2.5meter, China]	1
	1048304	(00000000–)	Cord, Power [4.5meter, India, S.Africa]	1

*** Requires Tennant *True* service or an authorized Tennant service provider**.

∇ ASSEMBLY

▲ INCLUDED IN ASSEMBLY

COVER GROUP

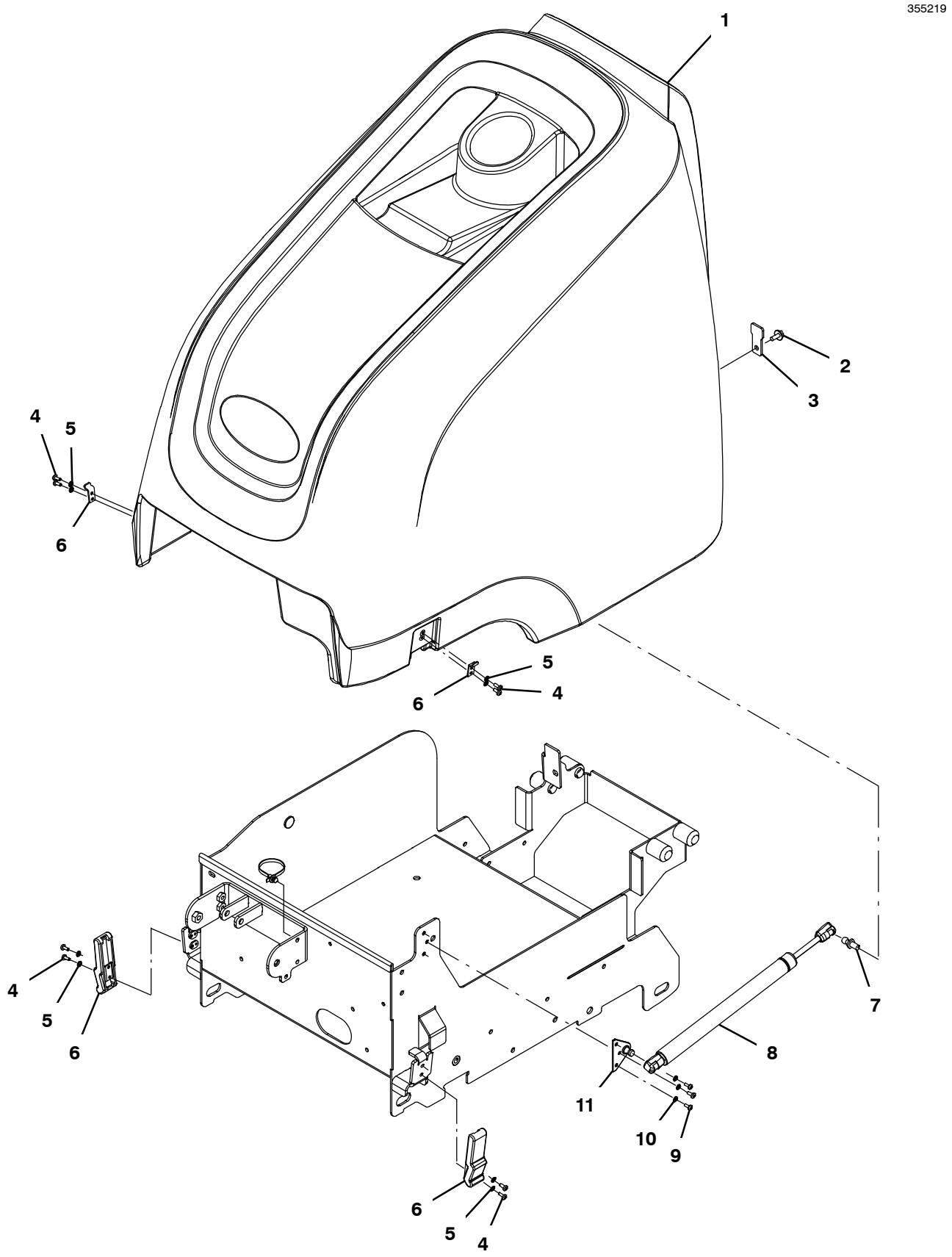

COVER GROUP

Ref.	Part No.	Serial Number	Description	Qty.
1	9013999	(00000000–)	Cover, Afmkt [B5] (Does Not Include Labels – Order Separately See Label Group)	1
2	1034731	(00000000–)	Screw, Hex, M6 X 1.00 X 16, Ss, Sems	1
3	1204697	(00000000–)	Bracket, Pivot, Body	1
4	49697	(00000000–)	Screw, Pan, Phl, M4 X 0.70 X 10, Ss	4
5	02938	(00000000–)	Washer, Lock, Int, 08, Ss	4
6	1207285	(00000000–)	Latch, Draw, Rbr, W/ Keeper, Yellow	2
7	1205551	(00000000–)	Stud, Ball, 10mm Ball, M8x1.25 Stud	1
8	1205533	(00000000–)	Damper	1
8	49697	(00000000–)	Screw, Pan, Phl, M4 X 0.70 X 10, Ss	3
10	02938	(00000000–)	Washer, Lock, Int, 08, Ss	3
11	1205549	(00000000–)	Bracket, Stud, Ball, .389 Dia	1

FRAME GROUP, PUSH

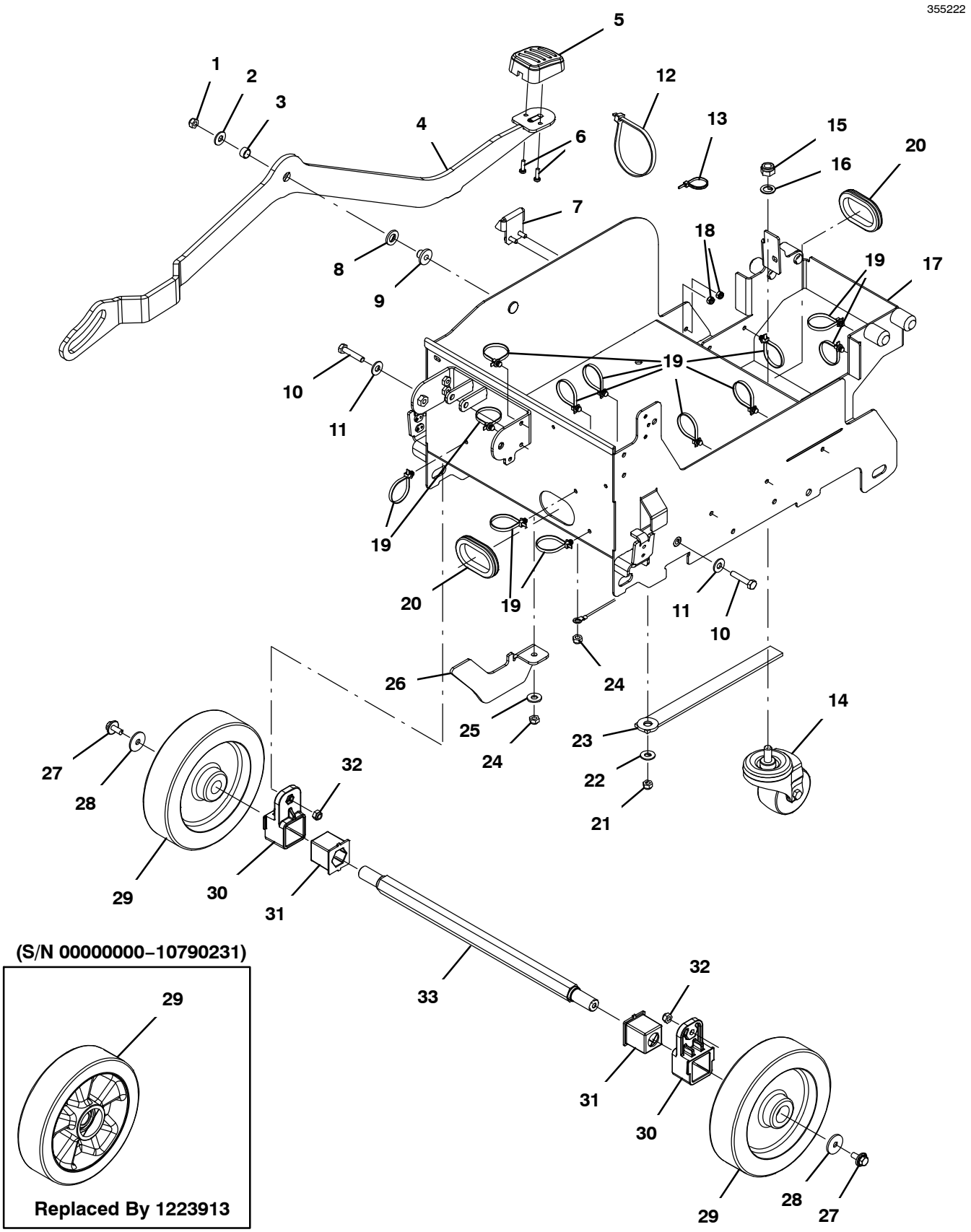

FRAME GROUP, PUSH

	Ref.	Part No.	Serial Number	Description	Qty.
	1	08713	(00000000–)	Nut, Hex, Lock, M8 X 1.25, Nl, Ss	1
	2	01685	(00000000–)	Washer, Flat, 0.38b 0.88d .08, Ss	1
	3	1205534	(00000000–)	Bearing, .50idx.31lg Journal	1
	4	1205104	(00000000–)	Pedal Wldt, Lift, Head	1
	5	1203776	(00000000–)	Cover, Pedal	1
	6	1043573	(00000000–)	Screw, #10–14 X 0.675, Spl[Shcs,Selftap]	2
	7	1013946	(00000000–)	Bracket, Locking, Pedal, Foot	1
	8	1013936	(00000000–)	Washer, Flat, 0.51b 0.94d .10, Nyl	1
	9	1203351	(00000000–)	Bushing, Flng, 8.3mmb 12.6mmd 10.7mml	1
	10	74440	(00000000–)	Screw, Hex, M8 X 1.25 X 40, Nl, Ss	2
	11	01685	(00000000–)	Washer, Flat, 0.38b 0.88d .08, Ss	2
	12	44961	(00000000–)	Tie, Cable, Nyl, 14.5l .30w 4.0 Max D	1
	13	130773	(00000000–)	Tie, Cable, Nyl, 11.0l, .14w, 3.0 Max. D	1
∇	14	9012767	(00000000–)	Caster Kit, Afmkt, W/ Hdwr	1
▲	15	09741	(00000000–)	Nut, Hex, Lock, M12 X 1.75, Nl, Ss	1
▲	16	140058	(00000000–)	Washer, Flat, 0.54b 0.88d .06, Ss [Wand]	1
	17	1258333	(11047953–)	Frame Wldt, Main [B5]	1
	17	1204572	(00000000–11047952)	Frame Wldt, Main [B5]	1
	18	08712	(00000000–)	Nut, Hex, Lock, M6 X 1.00, Nl, Ss	2
	19	1210807	(00000000–)	Wire, Tie [W/.25” Fir Tree Clip]	15
	20	10632–19	(00000000–)	Grommet, Rbr, 2.13id, F/2.5h, .12 Matl	2
	21	08713	(00000000–)	Nut, Hex, Lock, M8 X 1.25, Nl, Ss	1
	22	01685	(00000000–)	Washer, Flat, 0.38b 0.88d .08, Ss	1
	23	71579	(00000000–)	Strap, Static, W/Grommet, .19 1.1w 25.0l	1
	24	08713	(00000000–)	Nut, Hex, Lock, M8 X 1.25, Nl, Ss	2
	25	01685	(00000000–)	Washer, Flat, 0.38b 0.88d .08, Ss	1
	26	1205501	(00000000–)	Bracket, Follower, Head, 50cm	1
	27	1020341	(00000000–)	Screw, Hex, M8 X 1.25 X 20, Ss, Sems	2
	28	1016331	(00000000–)	Washer, Flat, 0.34b 1.25d .11, Ss	2
	29	1223724	(11047953–)	Wheel, Scrbr, 8.00d, W/ Brg	2
	29	1223913	(10849232–11047952)	Wheel, Scrbr, 213mm, W/ Brg	2
	29	1218755	(10790232–10849231)	Wheel, Scrbr, 213mm, W/ Brg (Replaced By 1223913 – Order Qty 2)	2
	29	1202505	(00000000–10790231)	Wheel, W/ Brg, 213mm (Replaced By 1223913 – Order Qty 2)	2
	30	1028292	(00000000–)	Adapter, Mtg, Axle, Alm [T3]	2
	31	1028381	(00000000–)	Grommet, Axle [Tpu, T3 Push]	2
	32	08713	(00000000–)	Nut, Hex, Lock, M8 X 1.25, Nl, Ss	2
	33	1202931	(00000000–)	Axle, Wheel, Hex [B5 Push]	1

∇ ASSEMBLY

▲ INCLUDED IN ASSEMBLY

FRAME GROUP, DRIVE

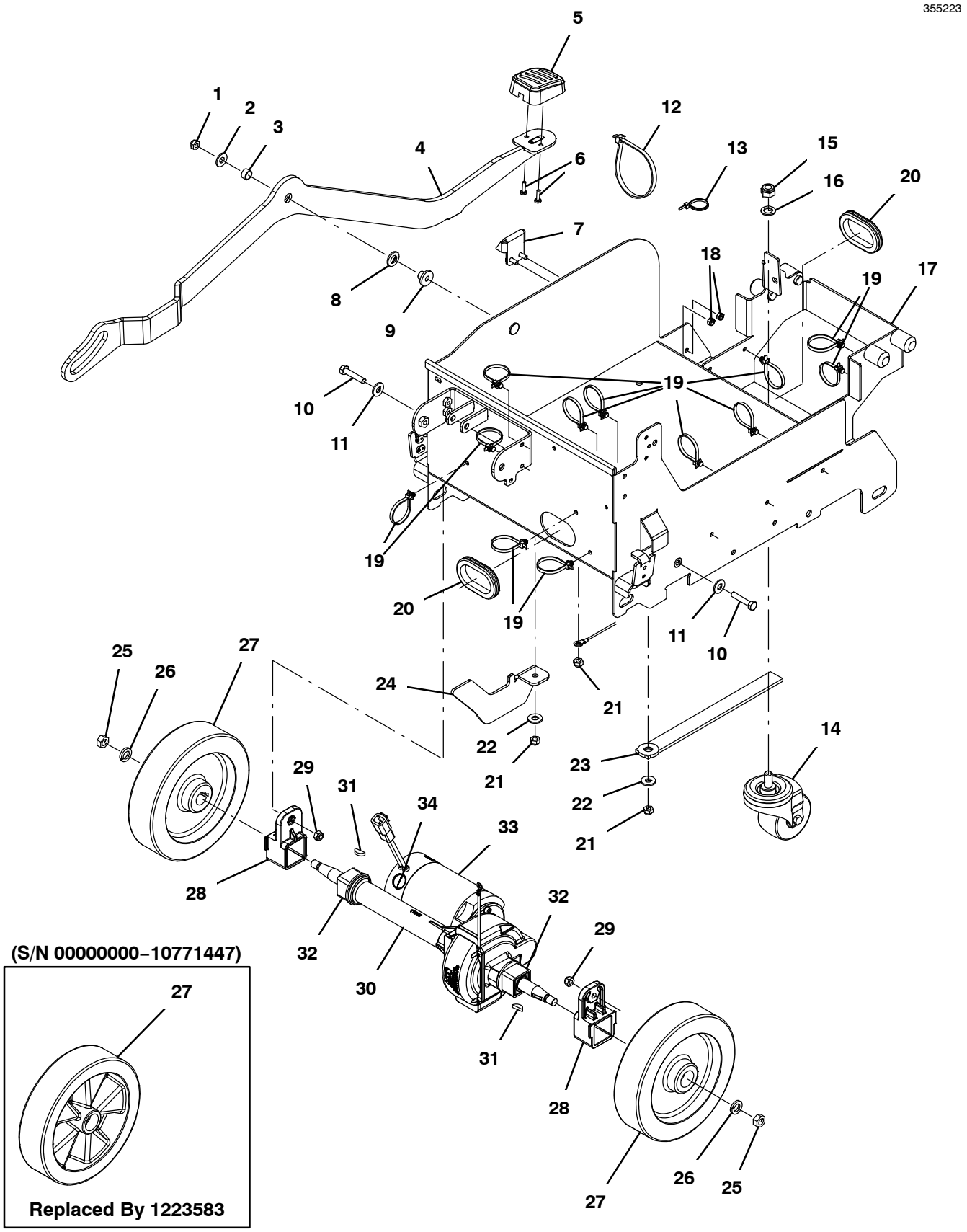

FRAME GROUP, DRIVE

	Ref.	Part No.	Serial Number	Description	Qty.
	1	08713	(00000000–)	Nut, Hex, Lock, M8 X 1.25, Nl, Ss	1
	2	01685	(00000000–)	Washer, Flat, 0.38b 0.88d .08, Ss	1
	3	1205534	(00000000–)	Bearing, .50idx.31lg Journal	1
	4	1205104	(00000000–)	Pedal Wldt, Lift, Head	1
	5	1203776	(00000000–)	Cover, Pedal	1
	6	1043573	(00000000–)	Screw, #10–14 X 0.675, Spl[Shcs,Selftap]	2
	7	1013946	(00000000–)	Bracket, Locking, Pedal, Foot	1
	8	1013936	(00000000–)	Washer, Flat, 0.51b 0.94d .10, Nyl	1
	9	1203351	(00000000–)	Bushing, Flng, 8.3mmb 12.6mmd 10.7mml	1
	10	74440	(00000000–)	Screw, Hex, M8 X 1.25 X 40, Nl, Ss	2
	11	01685	(00000000–)	Washer, Flat, 0.38b 0.88d .08, Ss	2
	12	44961	(00000000–)	Tie, Cable, Nyl, 14.5l .30w 4.0 Max D	1
	13	130773	(00000000–)	Tie, Cable, Nyl, 11.0l, .14w, 3.0 Max. D	1
∇	14	9012767	(00000000–)	Caster Kit, Afmkt, W/ Hdwr	1
▲	15	09741	(00000000–)	Nut, Hex, Lock, M12 X 1.75, Nl, Ss	2
▲	16	140058	(00000000–)	Washer, Flat, 0.54b 0.88d .06, Ss [Wand]	2
	17	1258333	(11047953–)	Frame Wldt, Main [B5]	1
	17	1204572	(00000000–11047952)	Frame Wldt, Main [B5]	1
	18	08712	(00000000–)	Nut, Hex, Lock, M6 X 1.00, Nl, Ss	2
	19	1210807	(00000000–)	Wire, Tie [W/.25” Fir Tree Clip]	15
	20	10632–19	(00000000–)	Grommet, Rbr, 2.13id, F/2.5h, .12 Matl	2
	21	08713	(00000000–)	Nut, Hex, Lock, M8 X 1.25, Nl, Ss	3
	22	01685	(00000000–)	Washer, Flat, 0.38b 0.88d .08, Ss	2
	23	71579	(00000000–)	Strap, Static, W/Grommet, .19 1.1w 25.0l	1
	24	1205501	(00000000–)	Bracket, Follower, Head, 50cm	1
	25	09741	(00000000–)	Nut, Hex, Lock, M12 X 1.75, Nl, Ss	2
	26	140058	(00000000–)	Washer, Flat, 0.54b 0.88d .06, Ss [Wand]	2
	27	1223582	(11047953–)	Wheel, Scrbr, 8.00d, W/ Taper	2
	27	1223583	(10817425–11047952)	Wheel, Scrbr, 213mm, W/ Taper	2
	27	1218753	(10771448–10817424)	Wheel, Scrbr, 213mm, W/ Taper (Replaced by 1223583 – Order Qty 2)	2
	27	1020688	(00000000–10771447)	Wheel, Scrbr, 213mm, W/ Taper (Replaced by 1223583 – Order Qty 2)	2
	28	1028292	(00000000–)	Adapter, Mtg, Axle, Alm [T3]	2
	29	08713	(00000000–)	Nut, Hex, Lock, M8 X 1.25, Nl, Ss	2
∇	30	1206634	(00000000–)	Transaxle, 24vdc [458h–2100 Asi]	1
▲	31	1021167	(00000000–)	Key, Woodruff, 5mm	2
▲	32	612880	(00000000–)	Joint, Transaxle, Replmt	2
▲∇	33	1212352	(00000000–)	Motor, Transaxle, 24vdc, Ul	1
▲▲	34	1212351	(00000000–)	Brush, Kit, Carbon, Transaxle, Ul (1 Pkg = 4 Brushes)	1

∇ ASSEMBLY

▲ INCLUDED IN ASSEMBLY

HEAD GROUP, 510 MM (20 IN)

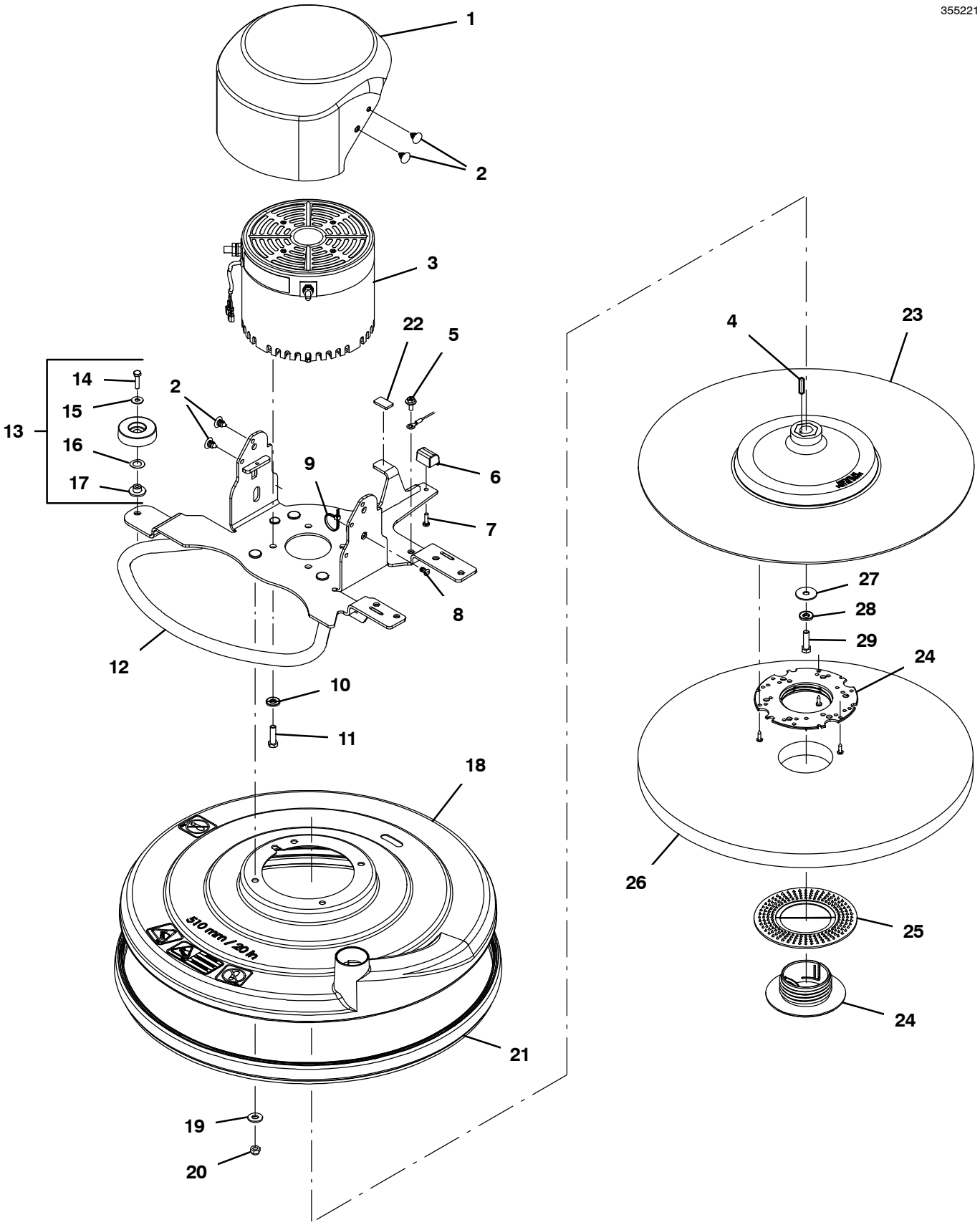

HEAD GROUP, 510 MM (20 IN)

	Ref.	Part No.	Serial Number	Description	Qty.
	1	1259512	(11044942–)	Cover, Motor, Hg (Gray)	1
	1	1205382	(00000000–11044941)	Cover, Motor, Tl (Teal)	1
	2	140262	(00000000–)	Clip, Snap–In	4
∇	3	1210910	(00000000–)	Motor, Ele, 24–60vdc, 3900rpm, 6.00hp#	1
▲		1212017	(00000000–)	Brush Assy, Carbon, Afmkt	1
▲	4	00928	(00000000–)	Key, Sq, 0.25 X 0.25, 1.00l	1
	5	1034731	(00000000–)	Screw, Hex, M6 X 1.00 X 16, Ss, Sems	1
	6	1205755	(00000000–)	Roller, Guide	1
	7	1043573	(00000000–)	Screw, #10–14 X 0.675, Spl[Shcs,Selftap]	1
	8	1071085	(00000000–)	Clip, Tie, 0.25d, Plstc	1
	9	130773	(00000000–)	Tie, Cable, Nyl, 11.0l, .14w, 3.0 Max. D	1
	10	41186	(00000000–)	Washer, Flat, Belleville, .31	4
	11	1016399	(00000000–)	Screw, Hex, M8 X 1.25 X 30, Nl, Ss	4
	12	1204800	(00000000–)	Motor Wldt, Mount, 50cm	1
∇	13	9012768	(00000000–)	Wheel Kit, Bmpr, Afmkt, W/ Hdwr	1
▲	14	1016005	(00000000–)	Screw, Hex, M6 X 1.00 X 25, Nl, Fl, Ss	1
▲	15	01684	(00000000–)	Washer, Flat, 0.27b 0.69d .05, Ss	1
▲	16	1210221	(00000000–)	Washer, Wave, .515b, .875d, .013, Ss	1
▲	17	1210186	(00000000–)	Bushing, Flng, 6.3mmb 12.6mmd 7.7mml	1
	18	9012769	(00000000–)	Shroud, Dust, Afmkt, 51cm, [Na] (N America / Export)	1
	18	9012770	(00000000–)	Shroud, Dust, Afmkt, 51cm, [Jp] (Japan)	1
	18	9012771	(00000000–)	Shroud, Dust, Afmkt, 51cm, [Ce] (Europe)	1
	19	01685	(00000000–)	Washer, Flat, 0.38b 0.88d .08, Ss	4
	20	08713	(00000000–)	Nut, Hex, Lock, M8 X 1.25, Nl, Ss	4
	21	1208033	(00000000–)	Skirt Assy, Shrd, 20.0d	1
	22	1032763	(00000000–)	Gasket, Stand, Support	1
∇	23	1210491	(00000000–)	Driver Assy, Pad, 20d	1
▲	24	32506	(00000000–)	Device, Centering, Rh Pad Retainer	1
▲	25	1205787	(00000000–)	Collar, Locking, Pad Driver, 6.1”	1
	26	611788	(00000000–)	Pad, 20.0[Burnish, Hairblend,1pick=1ctn] (Qty 5 Pads)	1
	27	41186	(00000000–)	Washer, Flat, Belleville, .31	1
	28	25732	(00000000–)	Washer, Flat, 0.36b 1.25d .09, Pl	1
	29	1016399	(00000000–)	Screw, Hex, M8 X 1.25 X 30, Nl, Ss	1

∇ ASSEMBLY

▲ INCLUDED IN ASSEMBLY

HEAD LIFT GROUP

355224

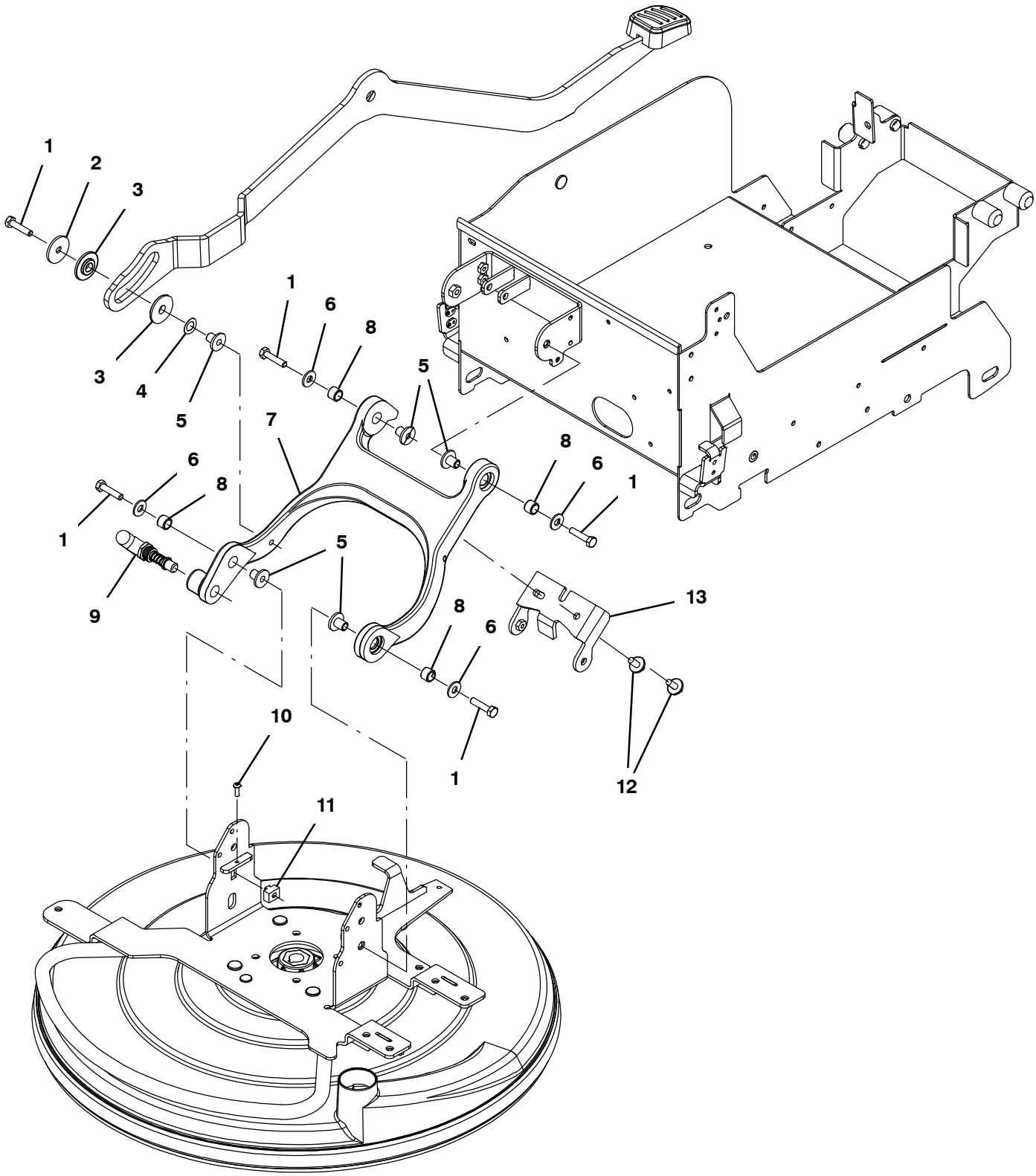

HEAD LIFT GROUP

	Ref.	Part No.	Serial Number	Description	Qty.
	1	59658	(00000000–)	Screw, Hex, M8 X 1.25 X 35, Nl, Ss	4
	2	379829	(00000000–)	Washer, Flat, 0.34b 1.50d .12, Stl, Pl	1
	3	1205779	(00000000–)	Roller, Flng, 12mmb 39.94mmd 6.5mml	2
	4	1210221	(00000000–)	Washer, Wave, .515b, .875d, .013, Ss	1
	5	1205562	(00000000–)	Bushing, Flng, 8.3mmb 11.7mmd 15mml	5
	6	01685	(00000000–)	Washer, Flat, 0.38b 0.88d .08, Ss	4
∇	7	9012779	(00000000–)	Arm, Lift, Head, Afmkt, W/Bearings	1
▲	8	9012780	(00000000–)	Bearing Kit, 12mmb 16mmd 12mmw, Qty=4	1
	9	1203378	(00000000–)	Pin, Spring, .50d 1.00b	1
	10	1205799	(00000000–)	Screw, Btn, Torx, M5 X 0.8 X 16, 8.8, Nl	1
	11	1221434	(00000000–)	Nut, T, M8 X 1.25, Pm Ss [B5/B7, T300]	1
	12	1020341	(00000000–)	Screw, Hex, M8 X 1.25 X 20, Ss, Sems	2
	13	1204894	(00000000–)	Guide Wldt, Rod	1

∇ ASSEMBLY

▲ INCLUDED IN ASSEMBLY

DOWN PRESSURE GROUP, AUTOMATED

355225

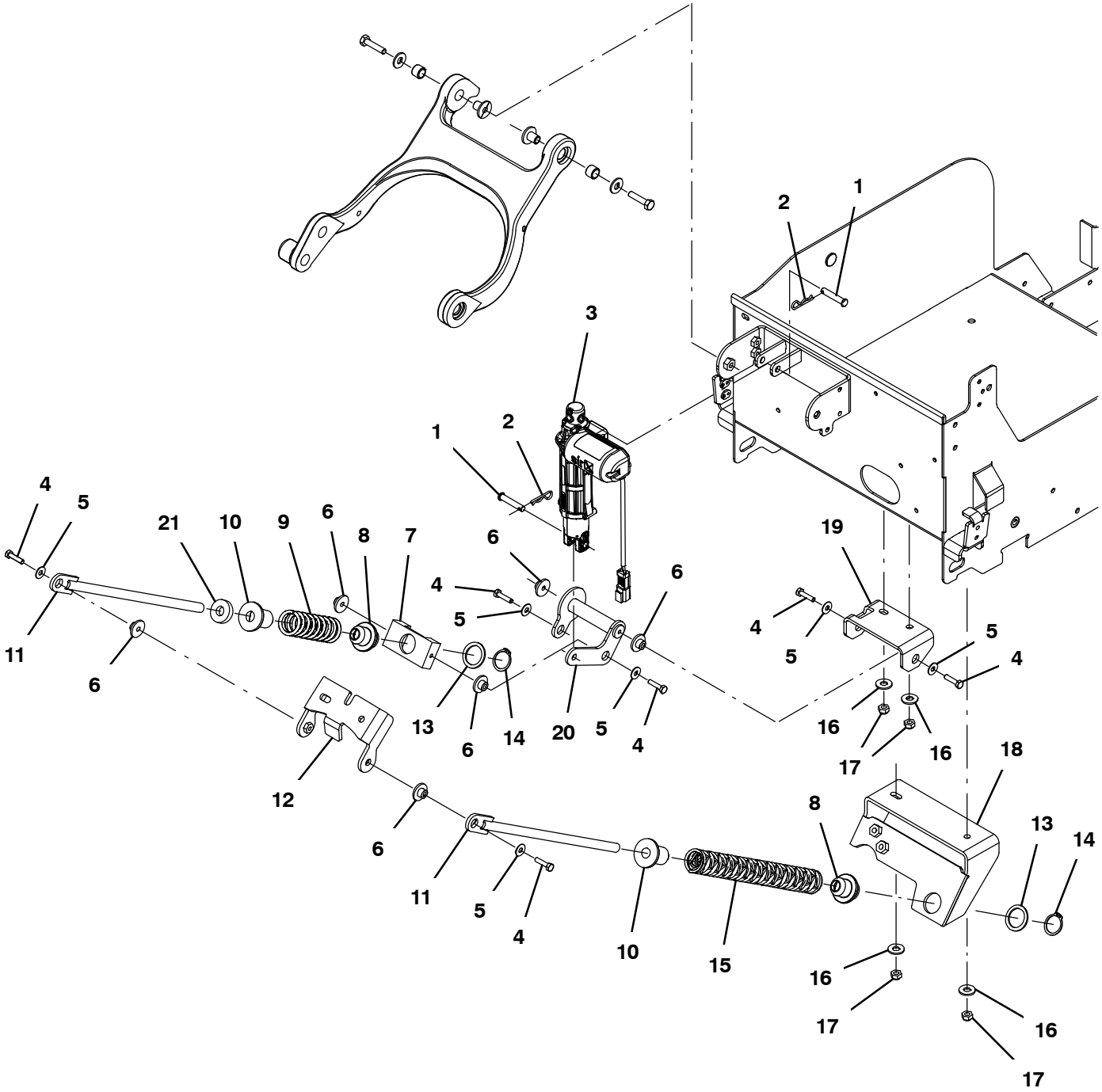

DOWN PRESSURE GROUP, AUTOMATED

Ref.	Part No.	Serial Number	Description	Qty.
1	397249	(00000000–)	Pin, Clevis, 0.31d X 1.62l	2
2	44906	(00000000–)	Pin, Cotter, Hair, 0.38d .093 Wir	2
3	1205700	(00000000–)	Actuator, 36vdc, 60mm Strk, 2sw, 350n	1
4	1016005	(00000000–)	Screw, Hex, M6 X 1.00 X 25, Nl, Fl, Ss	6
5	01684	(00000000–)	Washer, Flat, 0.27b 0.69d .05, Ss	6
6	1210186	(00000000–)	Bushing, Flng, 6.3mmb 12.6mmd 7.7mml	6
7	1220923	(00000000–)	Block, Guide, Rod, Pm, Pl [B5, B7 Auto]	1
8	1205548	(00000000–)	Bushing, Guide, Rod	2
9	1205883	(00000000–)	Spring, Cmpr,1.364od .162wir 4.462l[Brn]	1
10	1205557	(00000000–)	Bushing, Spring	2
11	1203314	(00000000–)	Rod Wldt, Guide	2
12	1204894	(00000000–)	Guide Wldt, Rod	1
13	1205832	(00000000–)	Washer, Flat, 1.06b 1.42d .09thk, Nyl	2
14	1205567	(00000000–)	Ring, Retaining, Ext, 26mmd	2
15	1203333	(00000000–)	Spring, Cmpr, 1.33od .145wir 10.35l[Red]	1
16	01685	(00000000–)	Washer, Flat, 0.38b 0.88d .08, Ss	4
17	08713	(00000000–)	Nut, Hex, Lock, M8 X 1.25, Nl, Ss	4
18	1204575	(00000000–)	Bracket Wldt, Rod	1
19	1205738	(00000000–)	Bracket, Bellcrank	1
20	1203198	(00000000–)	Bracket Wldt, Bellcrank	1
21	140063	(00000000–)	Washer, Flat, 0.51b 1.25d .31, Nyl	1

DOWN PRESSURE GROUP, MECHANICAL

355226

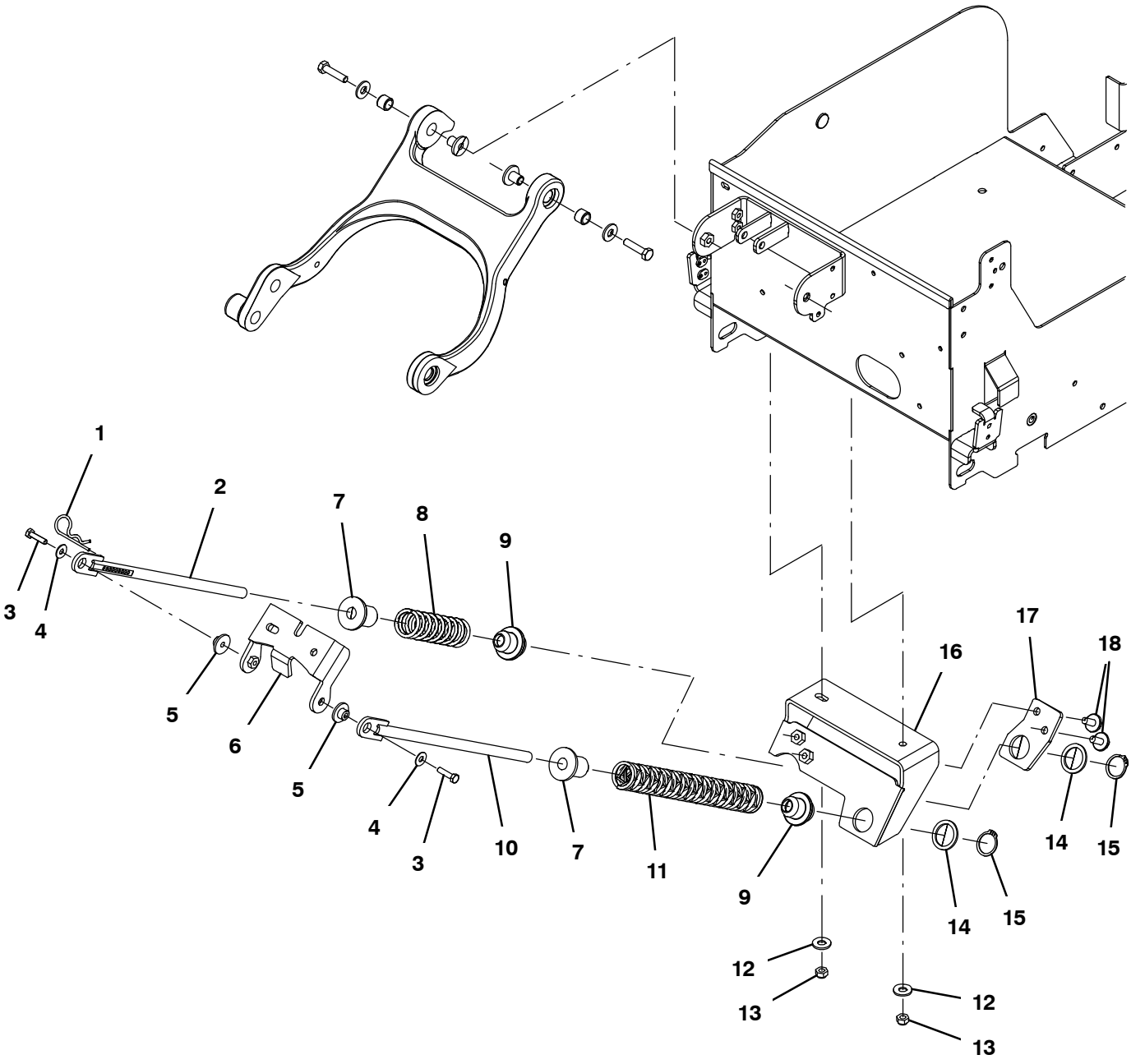

DOWN PRESSURE GROUP, MECHANICAL

Ref.	Part No.	Serial Number	Description	Qty.
1	02942	(00000000–)	Pin, Hair, Cotter, 0.62d .120 Wir	1
2	1207690	(00000000–)	Rod Wldt, Guide, Adj	1
3	1016005	(00000000–)	Screw, Hex, M6 X 1.00 X 25, Nl, Fl, Ss	2
4	01684	(00000000–)	Washer, Flat, 0.27b 0.69d .05, Ss	2
5	1210186	(00000000–)	Bushing, Flng, 6.3mmb 12.6mmd 7.7mml	2
6	1204569	(00000000–)	Bracket, Rod, Guide	1
7	1205557	(00000000–)	Bushing, Spring	2
8	1210790	(00000000–)	Spring, Cmpr, 1.38od .170wir 5.4l[Ornge]	1
9	1205548	(00000000–)	Bushing, Guide, Rod	2
10	1203314	(00000000–)	Rod Wldt, Guide	1
11	1203333	(00000000–)	Spring, Cmpr, 1.33od .145wir 10.35l[Red]	1
12	01685	(00000000–)	Washer, Flat, 0.38b 0.88d .08, Ss	2
13	08713	(00000000–)	Nut, Hex, Lock, M8 X 1.25, Nl, Ss	2
14	1205832	(00000000–)	Washer, Flat, 1.06b 1.42d .09thk, Nyl	2
15	1205567	(00000000–)	Ring, Retaining, Ext, 26mmd	2
16	1204575	(00000000–)	Bracket Wldt, Rod	1
17	1208110	(00000000–)	Plate, Spring	1
18	1020341	(00000000–)	Screw, Hex, M8 X 1.25 X 20, Ss, Sems	2

DUST CONTROL GROUP, ACTIVE

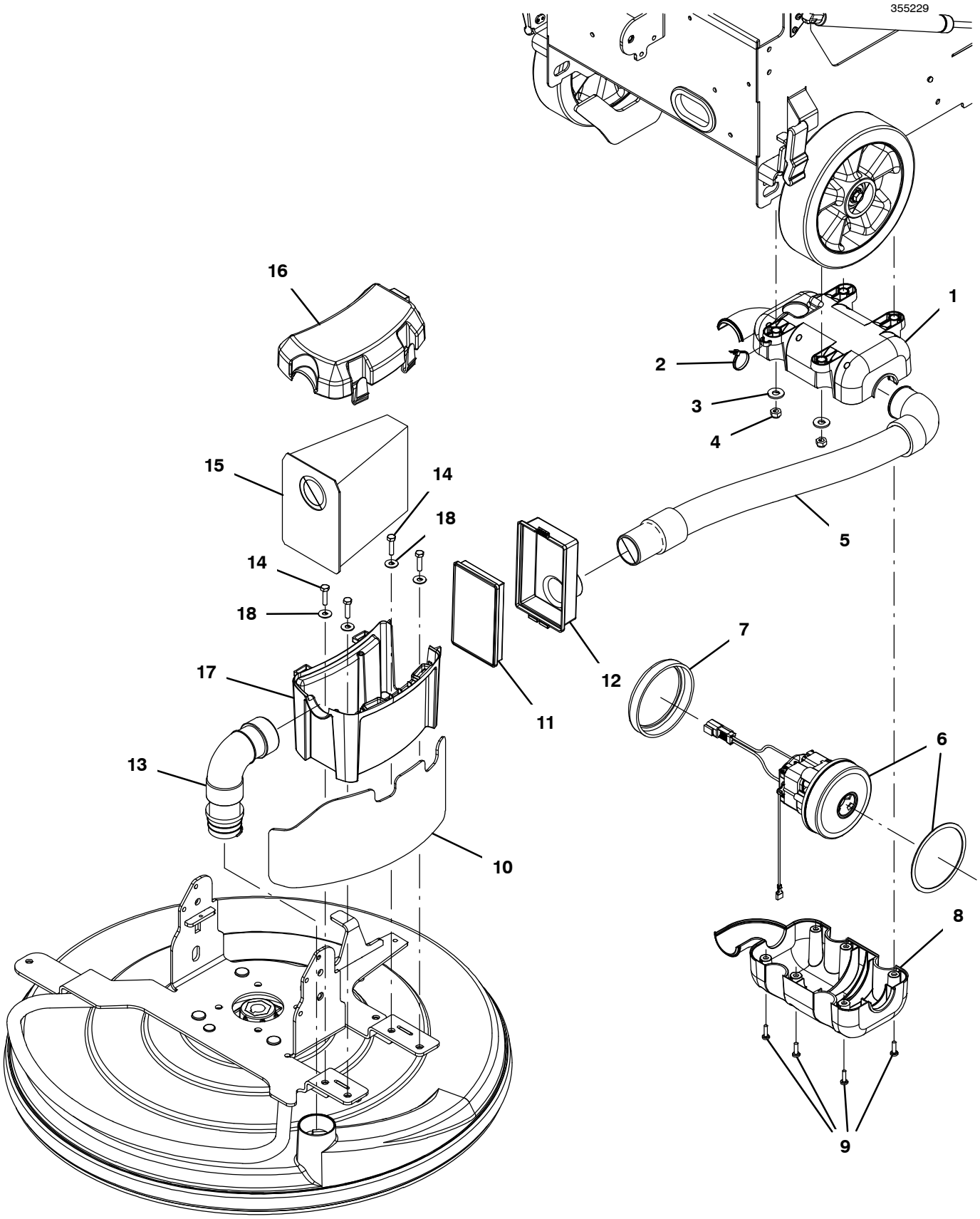

DUST CONTROL GROUP, ACTIVE

Ref.	Part No.	Serial Number	Description	Qty.
1	1203164	(00000000–)	Housing, Vacuum Motor, Left	1
2	130773	(00000000–)	Tie, Cable, Nyl, 11.0l, .14w, 3.0 Max. D	1
3	01685	(00000000–)	Washer, Flat, 0.38b 0.88d .08, Ss	4
4	08713	(00000000–)	Nut, Hex, Lock, M8 X 1.25, Nl, Ss	4
5	607275	(00000000–)	Hose, Vacuum, 1.50id X 040.0l, 2cuff,E90	1
6	9012781	(00000000–)	Fan Kit, Vacuum, Afmkt, W/ Gasket	1
7	1203349	(00000000–)	Gasket, Vac Motor	1
8	1203165	(00000000–)	Housing, Vacuum Motor, Right	1
9	1043573	(00000000–)	Screw, #10–14 X 0.675, Spl[Shcs,Selftap]	6
10	1215720	(10729501–)	Guard, Wldt, Dust Box	1
10	1211826	(00000000–10729500)	Guard, Wldt, Dust Box	1
11	1203162	(00000000–)	Filter, Hepa	1
12	1259515	(11044942–)	Housing, Filter, Hepa, Hg (Gray)	1
12	1202062	(00000000–11044941)	Housing, Filter, Hepa, Tl (Teal)	1
13	1204900	(00000000–)	Hose, Assy, 1.50 Id	1
14	1016005	(00000000–)	Screw, Hex, M6 X 1.00 X 25, Nl, Fl, Ss	4
15	1210869	(00000000–)	Bag, Dust, Paper[1 Pick=1 Pkg] (1 Pkg=10 Bags) (Standard)	1
16	1259513	(11044942–)	Cover, Dust Control, Hg (Gray)	1
16	1204976	(00000000–11044941)	Cover, Dust Control, Tl (Teal)	1
17	1259514	(11044942–)	Base, Dust Control, Hg (Gray)	1
17	1204973	(00000000–11044941)	Base, Dust Control, Tl (Teal)	1
18	01684	(00000000–)	Washer, Flat, 0.27b 0.69d .05, Ss	4

DUST CONTROL GROUP, PASSIVE

355230

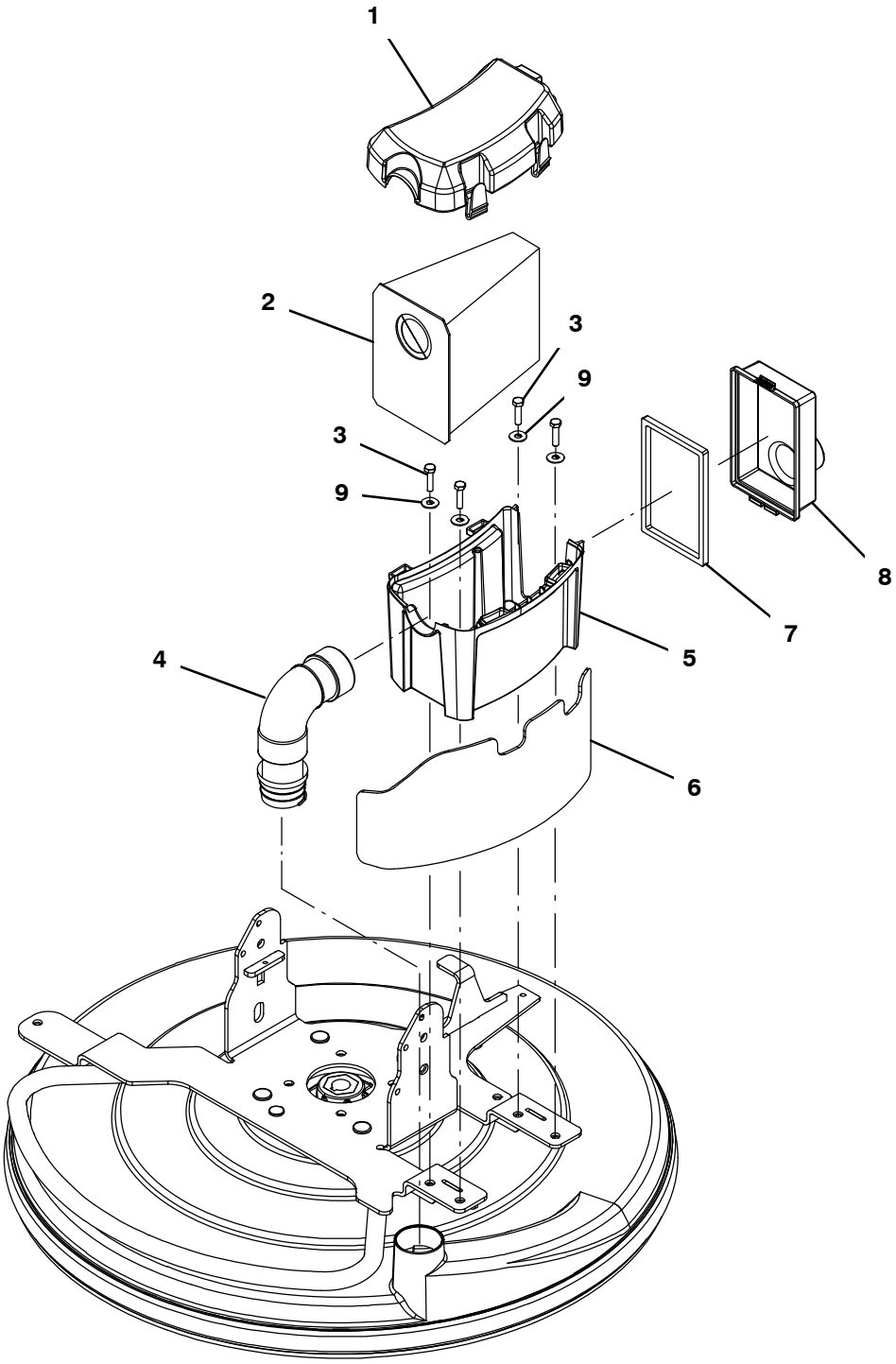

DUST CONTROL GROUP, PASSIVE

Ref.	Part No.	Serial Number	Description	Qty.
1	1259513	(11044942–)	Cover, Dust Control, Hg (Gray)	1
1	1204976	(00000000–11044941)	Cover, Dust Control, Tl (Teal)	1
2	1210869	(00000000–)	Bag, Dust, Paper[1 Pick=1 Pkg] (1 Pkg=10 Bags) (Standard)	1
2	1208744	(00000000–)	Bag, Dust, Cloth (Optional for Passive Dust Control Only)	1
3	1016005	(00000000–)	Screw, Hex, M6 X 1.00 X 25, Nl, Fl, Ss	4
4	1204900	(00000000–)	Hose, Assy, 1.50 Id	1
5	1259514	(11044942–)	Base, Dust Control, Hg (Gray)	1
5	1204973	(00000000–11044941)	Base, Dust Control, Tl (Teal)	1
6	1215720	(10729501–)	Guard, Wldt, Dust Box	1
6	1211826	(00000000–10729500)	Guard, Wldt, Dust Box	1
7	1212532	(00000000–)	Gasket, Cover, Box, Dust	1
8	1259515	(11044942–)	Housing, Filter, Hepa, Hg (Gray)	1
8	1202062	(00000000–11044941)	Housing, Filter, Hepa, Tl (Teal)	1
9	01684	(00000000–)	Washer, Flat, 0.27b 0.69d .05, Ss	4

ELECTRICAL COMPONENTS GROUP

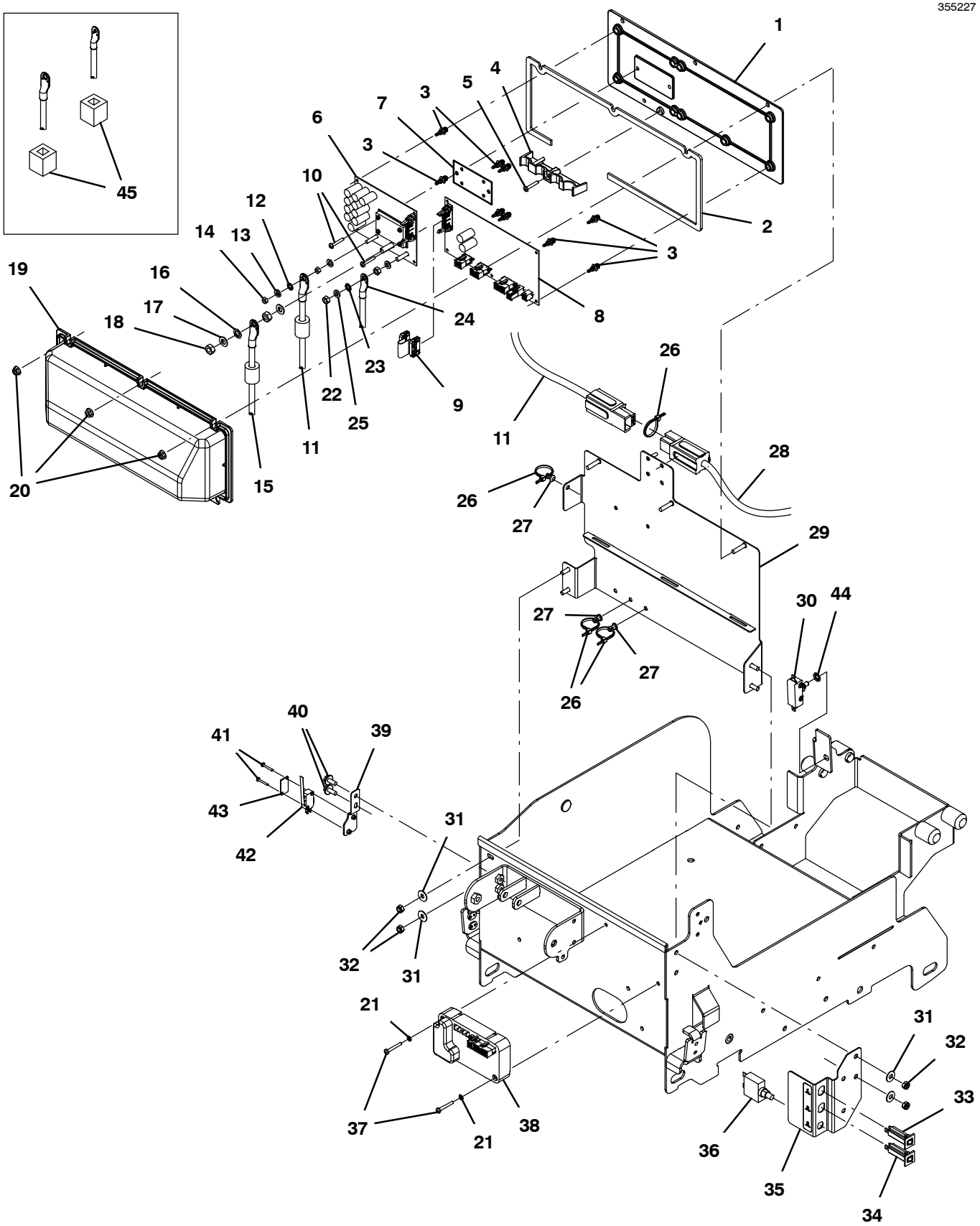

ELECTRICAL COMPONENTS GROUP

	Ref.	Part No.	Serial Number	Description	Qty.
	1	1207928	(00000000–)	Panel, Mounting, Cast	1
	2	1205971	(00000000–)	Gasket, Cover, Circuitboard	1
	3	1209448	(00000000–)	Standoff, Circuitboard, .25	9
	4	1203975	(00000000–)	Spacer, Terminal	1
	5	04403	(00000000–)	Screw, Pan, Phl, M4 X 0.70 X 25, Nl, Ss	1
∇	6	9012782	(00000000–)	Circuitboard Kit, Bridge, Afmkt, W/Strap	1
▲	7	1205845	(00000000–)	Circuitboard, Silpad [1/2 Bridge, Lower]	1
	8	9012783	(00000000–)	Circuitboard Kit, Base, Afmkt, W/ Strap (For Models w/ mechanical pad pressure and passive dust control)	1
	8	9012796	(00000000–)	Circuitboard Kit, Option, Afmkt, W/Strap (For Models w/ automated pad pressure and/or active dust control)	1
	9	1206669	(00000000–)	Cable, Assy [Ribbon, 20 Pos., 2.0l]	1
	10	04403	(00000000–)	Screw, Pan, Phl, M4 X 0.70 X 25, Nl, Ss	2
	11	1072935	(00000000–)	Cable, Assy, Fuse [B5, 100a, Propel] (Includes Ferrite)	1
	12	07515	(00000000–)	Washer, Lock, Int, 0.25, Ss	1
	13	1061918	(00000000–)	Washer, Flat, 0.25b 0.47d .06, Brs	1
	14	1202864	(00000000–)	Nut, Hex, Std, M5 X 0.80, Brs	1
	15	1072372	(00000000–)	Cable, 04ga 36.4l Blu[M8Ring/M8Ring] (Includes Ferrite)	1
	16	43952	(00000000–)	Washer, Lock, Int, 0.31, Ss	1
	17	1209373	(00000000–)	Washer, Flat, M8.4b X 16d X 1.6, Brs	1
	18	41361	(00000000–)	Nut, Hex, Std, M8 X 1.25, Brs	1
	19	1207594	(00000000–)	Cover, Board, Cntrl	1
	20	07790	(00000000–)	Nut, Hex, Flng, M6 X 1.00	3
	21	02938	(00000000–)	Washer, Lock, Int, 08, Ss	2
	22	1061910	(00000000–)	Nut, Hex, Std, M6 X 1.00, Brs	1
	23	07515	(00000000–)	Washer, Lock, Int, 0.25, Ss	1
	24	1072939	(00000000–)	Cable, Assy [B7/B5, Ground]	1
	25	1061918	(00000000–)	Washer, Flat, 0.25b 0.47d .06, Brs	1
	26	130773	(00000000–)	Tie, Cable, Nyl, 11.0l, .14w, 3.0 Max. D	4
	27	1071085	(00000000–)	Clip, Tie, 0.25d, Plstc	3
	28	1072365	(00000000–)	Cable, 02ga 21.6l Red [M8 Ring / And.]	1
	29	1204898	(00000000–)	Panel Wldt, Mounting	1
	30	1207893	(00000000–)	Switch, Push, Snap Action, 25a [No]	1
	31	01684	(00000000–)	Washer, Flat, 0.27b 0.69d .05, Ss	2
	32	08712	(00000000–)	Nut, Hex, Lock, M6 X 1.00, Nl, Ss	2
	33	1064184	(00000000–)	Circuitbreaker, 02.5a, Resetable	1
	34	1064188	(00000000–)	Circuitbreaker, 15.0a, Resetable	1
	35	1208453	(00000000–)	Bracket, Circuit Breaker	1
	36	383725	(00000000–)	Circuitbreaker, 30.0a, Resetable	1
	37	33931	(00000000–)	Screw, Pan, Phl, M4 X 0.70 X 30, Ss	2
	38	9012826*	(00000000–)	Controller, Drive, Afmkt (Drive Model)	1
	39	1207555	(00000000–)	Bracket, Thread, Switch, M3 Nut [B5, B7]	1
	40	1034731	(00000000–)	Screw, Hex, M6 X 1.00 X 16, Ss, Sems	2
	41	06922	(00000000–)	Screw, Pan, Phl, M3 X 0.50 X 20, 4.8	2
	42	1205323	(00000000–)	Switch, 0.1a, Spdt [Micro, Straight]	1
	43	601359	(00000000–)	Plate, Backing, Switch	1
	44	32988	(00000000–)	Washer, Lock, Int, 0.38	1
	45	1210283	(00000000–)	Box, Wire [Ferrite, Emi Filter] (No Longer Available – Replaced by Cable 1072935 or 1072372 Includes Ferrite)	2

*** Requires Tennant *True* service or an authorized Tennant service provider**.

∇ ASSEMBLY

▲ INCLUDED IN ASSEMBLY

LOWER CONSOLE GROUP, OFF–BOARD CHARGER

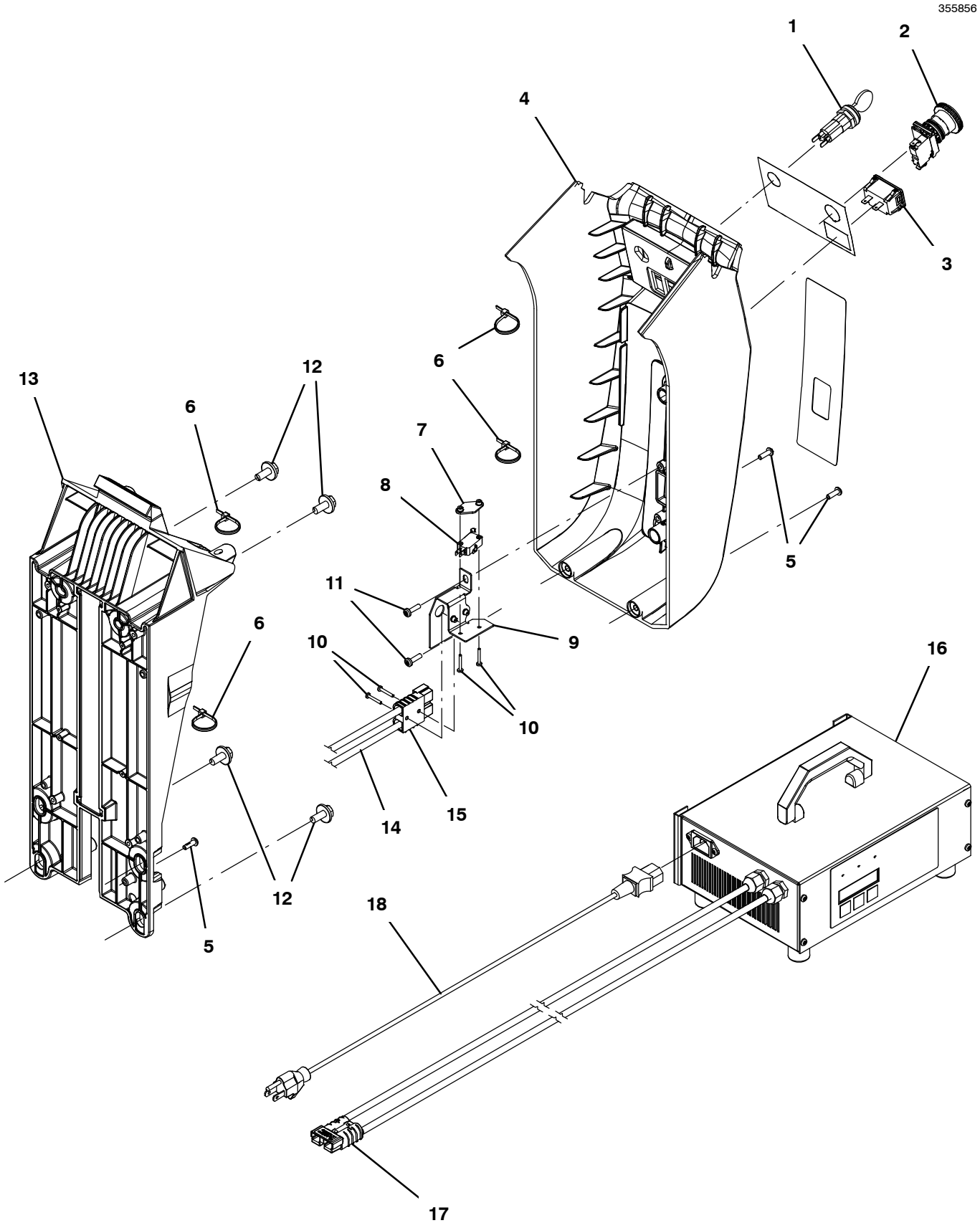

LOWER CONSOLE GROUP, OFF–BOARD CHARGER

	Ref.	Part No.	Serial Number	Description	Qty.
∇	1	1011402	(00000000–)	Switch, Key	1
▲		1017696	(00000000–)	Key Set, Replmt [F/ Keyswitch 1011402]	1
	2	1266688	(00000000–)	Switch, Safety, Shutoff (Propel Model Only)	1
	3	1064038	(00000000–)	Gauge, Hourmeter, 05–277 Volt, Ac / Dc	1
	4	1203802	(00000000–)	Cover, Column, Cntrl	1
	5	1205799	(00000000–)	Screw, Btn, Torx, M5 X 0.8 X 16, 8.8, Nl	3
	6	130773	(00000000–)	Tie, Cable, Nyl, 11.0l, .14w, 3.0 Max. D	4
	7	1013705	(00000000–)	Plate, Thread, Switch, M3 Nut, 96hr Pl	1
	8	1215716	(00000000–)	Switch, 0.1a, Spdt[Micro, Gold Contacts]	1
	9	1208599	(00000000–)	Bracket Assy, Plug, Charger	1
	10	06922	(00000000–)	Screw, Pan, Phl, M3 X 0.50 X 20, 4.8	4
	11	1043573	(00000000–)	Screw, #10–14 X 0.675, Spl[Shcs,Selftap]	2
	12	1020341	(00000000–)	Screw, Hex, M8 X 1.25 X 20, Ss, Sems	4
	13	1216531	(00000000–)	Frame, Column, Cntrl [Revised Machined]	1
∇	14	1072939	(00000000–)	Cable, Assy [B7/B5, Ground]	1
▲	15	130155	(00000000–)	Connector, Battery, 6ga 50a, Gray[2cont]	1
∇	16	1208644	(00000000–)	Charger, 36vdc, 25a 85–265vac [Offboard] (180–250 AH Wet Lead Acid Batteries)	1
∇	16	9012740	(00000000–)	Charger, 36vdc 25a [P/N 1208644, #31] (200–350 AH AGM Batteries)	1
∇	16	9012739	(00000000–)	Charger, 36vdc 25a [P/N 1208644, #03] (260–360 AH Wet Lead Acid Batteries)	1
▲	17	130155	(00000000–)	Connector, Battery, 6ga 50a, Gray[2cont]	1
	18	1073882	(00000000–)	Cord, Power, 16/3, 15a, 15ft Blk [Us]	1
	18	1032820	(00000000–)	Cord, Power, Blk [4.5meter, Uk]	1
	18	1032849	(00000000–)	Cord, Power, Blk [4.5meter, Ce]	1
	18	1026325	(00000000–)	Cord, Power, 1.0mm2/3 Blk[2.5meter, Aus]	1
	18	1026330	(00000000–)	Cord, Power, 1.0mm2 [2.5meter, China]	1
	18	1048304	(00000000–)	Cord, Power [4.5meter, India, S.Africa]	1

∇ ASSEMBLY

▲ INCLUDED IN ASSEMBLY

LOWER CONSOLE GROUP, ON–BOARD CHARGER

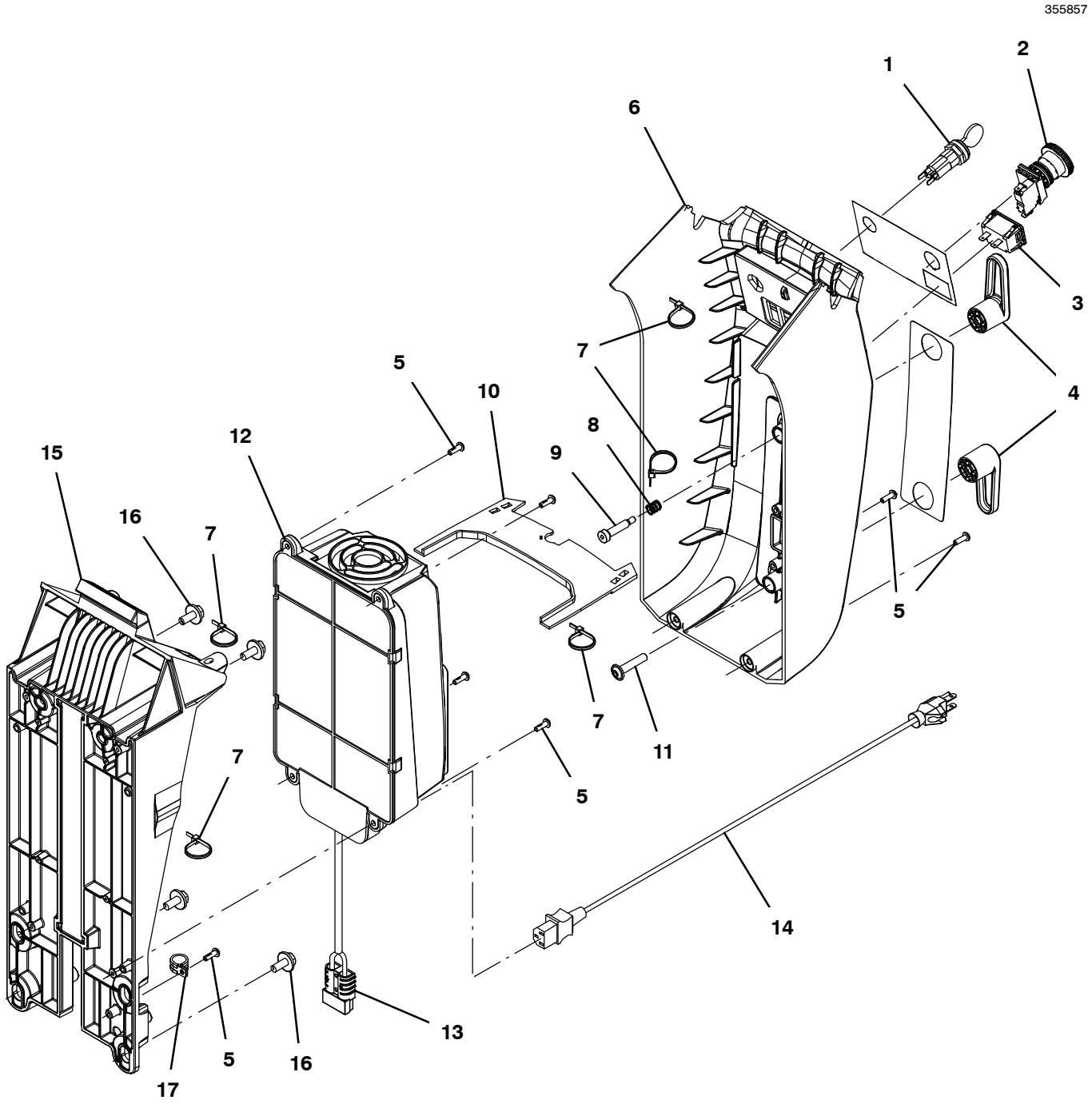

LOWER CONSOLE GROUP, ON–BOARD CHARGER

	Ref.	Part No.	Serial Number	Description	Qty.
∇	1	1011402	(00000000–)	Switch, Key	1
▲		1017696	(00000000–)	Key Set, Replmt [F/ Keyswitch 1011402]	1
	2	1266688	(00000000–)	Switch, Safety, Shutoff (Propel Model Only)	1
	3	1064038	(00000000–)	Gauge, Hourmeter, 05–277 Volt, Ac / Dc	1
	4	1205496	(00000000–)	Hook, Cord	2
	5	1205799	(00000000–)	Screw, Btn, Torx, M5 X 0.8 X 16, 8.8, Nl	7
	6	1203802	(00000000–)	Cover, Column, Cntrl	1
	7	130773	(00000000–)	Tie, Cable, Nyl, 11.0l, .14w, 3.0 Max. D	4
	8	611311	(10980969–)	Spring, Cmpr, 0.40od .05wir 00.5l, Pl,Mw	1
	8	611311	(00000000–10980968)	Spring, Cmpr, 0.40od .05wir 00.5l, Pl,Mw	2
	9	1024965	(10980969–)	Bolt, Shld, 08mmd X 030mm, M06 X 1.0	1
	9	1024965	(00000000–10980968)	Bolt, Shld, 08mmd X 030mm, M06 X 1.0	2
	10	1207290	(00000000–)	Cover, Charger	1
	11	1248098	(10980969–)	Screw, Btn, Flng, M6 X 1.0 X 30, 10.9	1
∇	12	1202585	(00000000–)	Charger, 36vdc 25a 115–240vac [On–Board]	1
▲	13	130155	(00000000–)	Connector, Battery, 6ga 50a, Gray[2cont]	1
	14	1073882	(00000000–)	Cord, Power, 16/3, 15a, 15ft Blk [Us]	1
	14	1032820	(00000000–)	Cord, Power, Blk [4.5meter, Uk]	1
	14	1032849	(00000000–)	Cord, Power, Blk [4.5meter, Ce]	1
	14	1026325	(00000000–)	Cord, Power, 1.0mm2/3 Blk[2.5meter, Aus]	1
	14	1026330	(00000000–)	Cord, Power, 1.0mm2 [2.5meter, China]	1
	14	1048304	(00000000–)	Cord, Power [4.5meter, India, S.Africa]	1
	15	1216531	(00000000–)	Frame, Column, Cntrl [Revised Machined]	1
	16	1020341	(00000000–)	Screw, Hex, M8 X 1.25 X 20, Ss, Sems	4
	17	378969	(00000000–)	Clamp, Cable, Stl, 0.56d X 0.38w, 1hole	1

∇ ASSEMBLY

▲ INCLUDED IN ASSEMBLY

HANDLE GROUP, BASE, PUSH

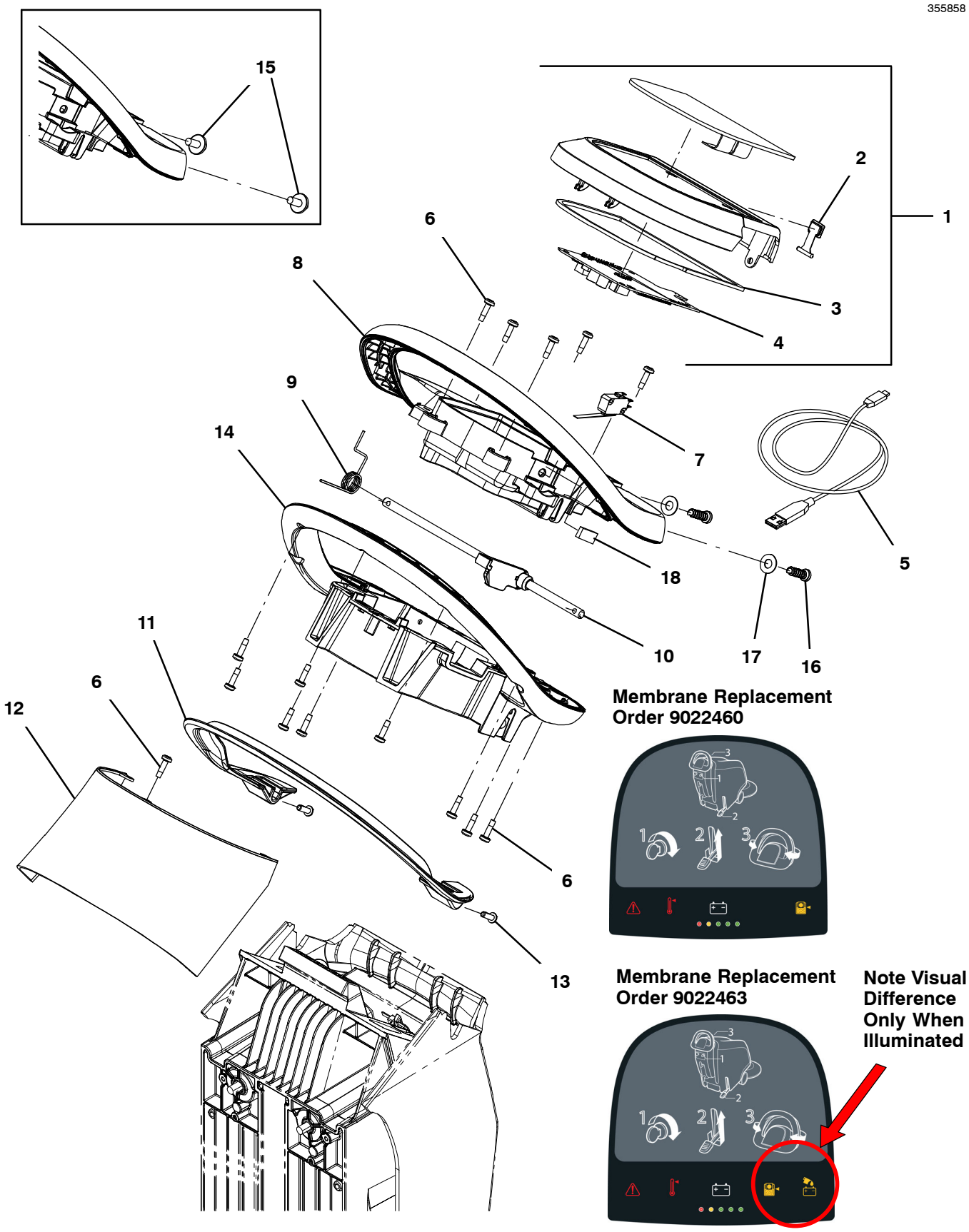

HANDLE GROUP, BASE, PUSH

	Ref.	Part No.	Serial Number	Description	Qty.
∇	1	9022463*	(11120706–)	Bezel Kit, Mechanical, Push, Ci	1
▲		9022460*	(11120706–)	Screen Kit, Mechanical, Push, Ci	1
▲	2	1205618	(00000000–)	Cap, Usb	1
▲	3	1245824	(MAR2020–)	Gasket, Console	1
▲	4	N/A	(11120706–)	Circuitboard [Ui, Rtos]	1
∇	1	9012784*	(00000000–11120705)	Bezel Kit, Mechanical, Push, Afmkt (Replaced By 9022463)	1
▲	2	1205618	(00000000–)	Cap, Usb	1
▲	3	1245824	(MAR2020–)	Gasket, Console	1
	4	9012787*	(00000000–11120705)	Circuitboard Kit, Console (Replaced By 9022463)	1
	5	1071235	(00000000–)	Cable [Usb, 2m, A–Male To Mini–B–Male]	1
	6	1043573	(00000000–)	Screw, #10–14 X 0.675, Spl[Shcs,Selftap]	16
	7	1205323	(00000000–)	Switch, 0.1a, Spdt [Micro, Straight]	1
	8	1203787	(00000000–)	Housing, Handle, Cntrl, Top	1
	9	1205781	(00000000–)	Spring, Return, Bail	1
	10	1205143	(00000000–)	Shaft Asm, Bail, Handle	1
	11	1205778	(00000000–)	Handle, Bail [Machined]	1
	12	1207004	(00000000–)	Cover, Handle, Cntrl	1
	13	1205799	(00000000–)	Screw, Btn, Torx, M5 X 0.8 X 16, 8.8, Nl	2
	14	1222608	(00000000–)	Housing, Handle, Cntrl, Bottom, Slotted	1
	15	1020341	(10795905–)	Screw, Hex, M8 X 1.25 X 20, Ss, Sems	2
	15	1020341	(00000000–10795904)	Screw, Hex, M8 X 1.25 X 20, Ss, Sems	4
	16	1215863	(10795905–)	Screw, Pan, Torx, M8 X 3.5 X 25[Remform]	2
	17	140027	(10795905–)	Washer, Flat, 0.35b 0.75d .04, Ss	2
	18	1063909	(MAR2020–)	Seal, Afmkt, Rbr, Clsd, Adh, 01ft	1

*** Requires Tennant *True* service or an authorized Tennant service provider**.

∇ ASSEMBLY

▲ INCLUDED IN ASSEMBLY

HANDLE GROUP, BASE, PROPEL

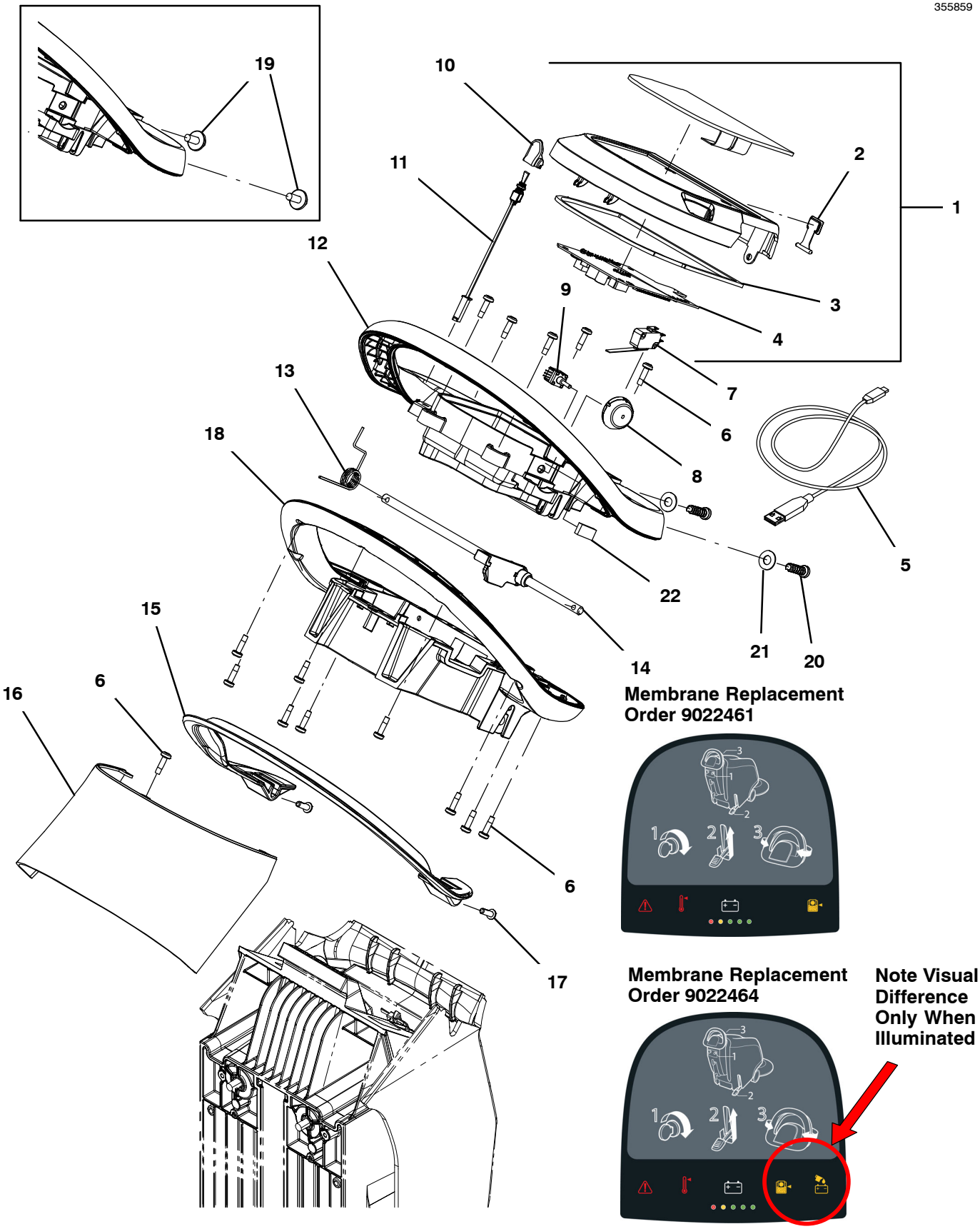

HANDLE GROUP, BASE, PROPEL

	Ref.	Part No.	Serial Number	Description	Qty.
∇	1	9022464*	(11120706–)	Bezel Kit, Mechanical, Propel, Ci	1
▲		9022461*	(11120706–)	Screen Kit, Mechanical, Propel, Ci	1
▲	2	1205618	(00000000–)	Cap, Usb	1
▲	3	1245824	(MAR2020–)	Gasket, Console	1
▲	4	N/A	(11120706–)	Circuitboard [Ui, Rtos]	1
∇	1	9012785*	(00000000–11120705)	Bezel Kit, Mechanical, Propel, Afmkt (Replaced By 9022464)	1
▲	2	1205618	(00000000–)	Cap, Usb	1
▲	3	1245824	(MAR2020–)	Gasket, Console	1
	4	9012787*	(00000000–11120705)	Circuitboard Kit, Console (Replaced By 9022464)	1
	5	1071235	(00000000–)	Cable [Usb, 2m, A–Male To Mini–B–Male]	1
	6	1043573	(00000000–)	Screw, #10–14 X 0.675, Spl[Shcs,Selftap]	16
	7	1205323	(00000000–)	Switch, 0.1a, Spdt [Micro, Straight]	1
	8	1234365	(00000000–)	Dial, Range, Speed	1
	9	1256757	(11009187–)	Potentiometer [100k, 1 Turn, Multi–Mach]	1
	9	1246392	(00000000–11009186)	Potentiometer [100k, 1 Turn, Multi–Mach] (Replaced By 1256757)	1
	10	1209730	(00000000–)	Cap, Toggle, Direction	1
	11	1209673	(00000000–)	Switch Assy, Toggle, Direction	1
	12	1203787	(00000000–)	Housing, Handle, Cntrl, Top	1
	13	1205781	(00000000–)	Spring, Return, Bail	1
	14	1205143	(00000000–)	Shaft Asm, Bail, Handle	1
	15	1205778	(00000000–)	Handle, Bail [Machined]	1
	16	1207004	(00000000–)	Cover, Handle, Cntrl	1
	17	1205799	(00000000–)	Screw, Btn, Torx, M5 X 0.8 X 16, 8.8, Nl	2
	18	1222608	(00000000–)	Housing, Handle, Cntrl, Bottom, Slotted	1
	19	1020341	(10795905–)	Screw, Hex, M8 X 1.25 X 20, Ss, Sems	2
	19	1020341	(00000000–10795904)	Screw, Hex, M8 X 1.25 X 20, Ss, Sems	4
	20	1215863	(10795905–)	Screw, Pan, Torx, M8 X 3.5 X 25[Remform]	2
	21	140027	(10795905–)	Washer, Flat, 0.35b 0.75d .04, Ss	2
	22	1063909	(MAR2020–)	Seal, Afmkt, Rbr, Clsd, Adh, 01ft	1

*** Requires Tennant *True* service or an authorized Tennant service provider**.

∇ ASSEMBLY

▲ INCLUDED IN ASSEMBLY

HANDLE GROUP, POWER, PROPEL

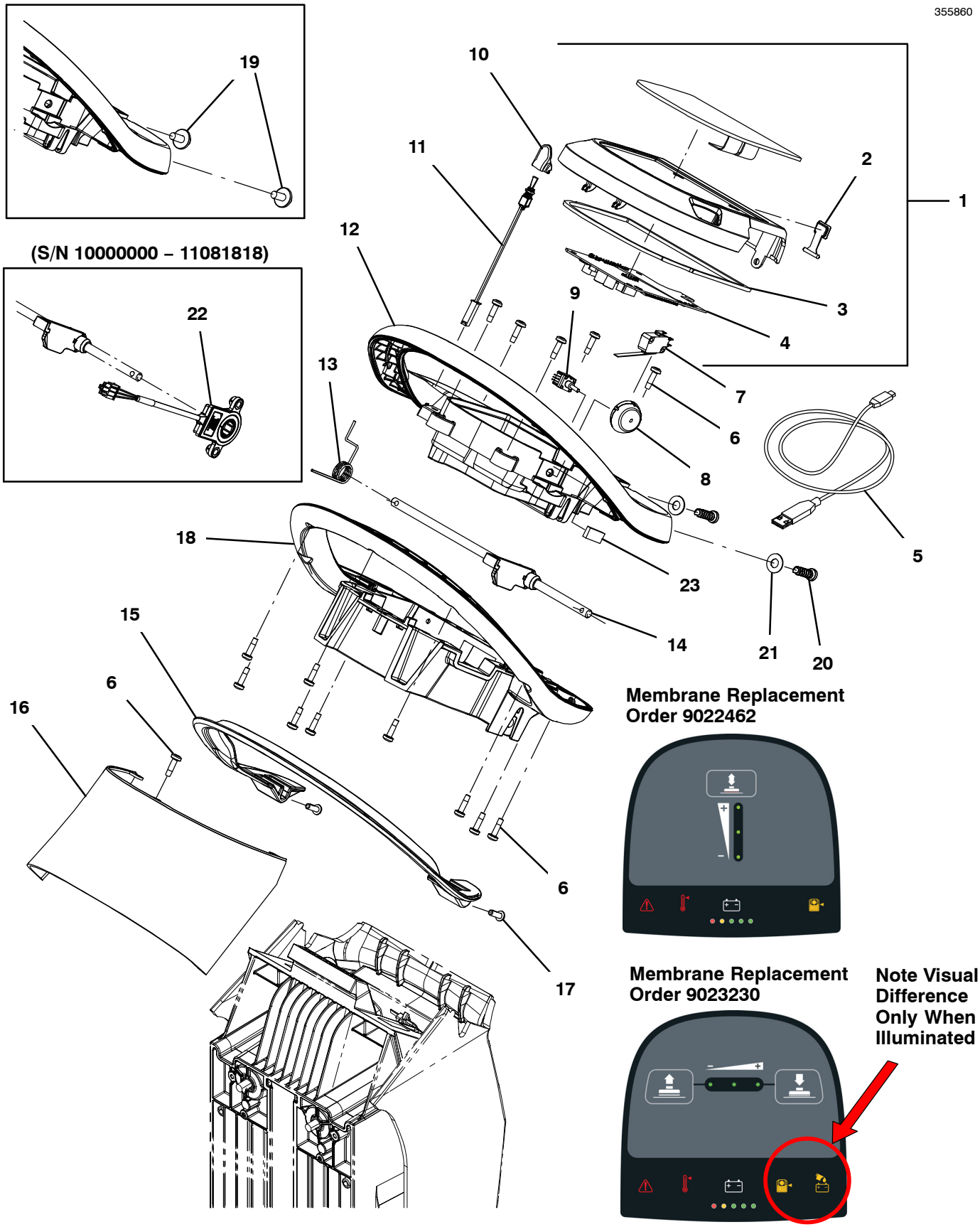

HANDLE GROUP, POWER, PROPEL

	Ref.	Part No.	Serial Number	Description	Qty.
∇	1	9022465*	(11120706–)	Bezel Kit, Actuator, Propel, Ci	1
▲		9022462*	(11120706–)	Screen Kit, Actuator, Propel, Ci	1
▲	2	1205618	(00000000–)	Cap, Usb	1
▲	3	1245824	(MAR2020–)	Gasket, Console	1
▲	4	N/A	(11120706–)	Circuitboard [Ui, Rtos]	1
∇	1	9012786*	(00000000–11120705)	Bezel Kit, Actuator, Propel, Afmkt (Replaced By 9023230)	1
▲	2	1205618	(00000000–)	Cap, Usb	1
▲	3	1245824	(MAR2020–)	Gasket, Console	1
	4	9012787*	(00000000–11120705)	Circuitboard Kit, Console (Replaced By 9023230)	1
	5	1071235	(00000000–)	Cable [Usb, 2m, A–Male To Mini–B–Male]	1
	6	1043573	(00000000–)	Screw, #10–14 X 0.675, Spl[Shcs,Selftap]	16
	7	1205323	(00000000–)	Switch, 0.1a, Spdt [Micro, Straight]	1
	8	1234365	(00000000–)	Dial, Range, Speed	1
	9	1256757	(11009187–)	Potentiometer [100k, 1 Turn, Multi–Mach]	1
	9	1246392	(00000000–11009186)	Potentiometer [100k, 1 Turn, Multi–Mach] (Replaced By 1256757)	1
	10	1209730	(00000000–)	Cap, Toggle, Direction	1
	11	1209673	(00000000–)	Switch Assy, Toggle, Direction	1
	12	1203787	(00000000–)	Housing, Handle, Cntrl, Top	1
	13	1205781	(00000000–)	Spring, Return, Bail	1
	14	1205143	(00000000–)	Shaft Asm, Bail, Handle	1
	15	1205778	(00000000–)	Handle, Bail [Machined]	1
	16	1207004	(00000000–)	Cover, Handle, Cntrl	1
	17	1205799	(00000000–)	Screw, Btn, Torx, M5 X 0.8 X 16, 8.8, Nl	2
	18	1222608	(00000000–)	Housing, Handle, Cntrl, Bottom, Slotted	1
	19	1020341	(10795905–)	Screw, Hex, M8 X 1.25 X 20, Ss, Sems	2
	19	1020341	(00000000–10795904)	Screw, Hex, M8 X 1.25 X 20, Ss, Sems	4
	20	1215863	(10795905–)	Screw, Pan, Torx, M8 X 3.5 X 25[Remform]	2
	21	140027	(10795905–)	Washer, Flat, 0.35b 0.75d .04, Ss	2
	22	1205127	(00000000–11081818)	Sensor, Rotary [B5/B7, Bail Sensor] (Replaced By 9022811)	1
	23	1063909	(MAR2020–)	Seal, Afmkt, Rbr, Clsd, Adh, 01ft	1

*** Requires Tennant *True* service or an authorized Tennant service provider**.

∇ ASSEMBLY

▲ INCLUDED IN ASSEMBLY

BATTERY GROUP, 185AH C20 WET LEAD ACID

355231

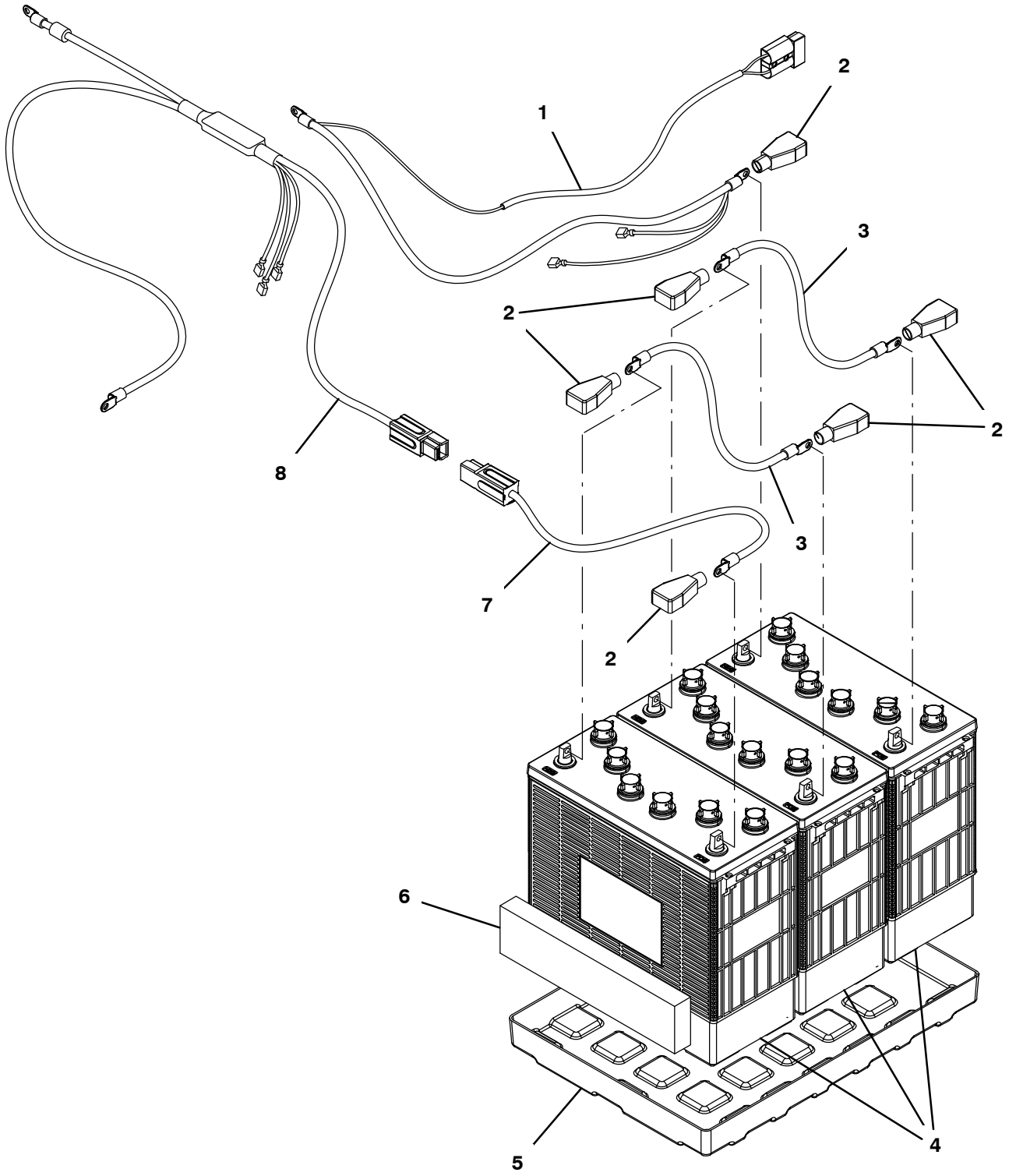

BATTERY GROUP, 185AH C20 WET LEAD ACID

Ref.	Part No.	Serial Number	Description	Qty.
1	1072939	(00000000–)	Cable, Assy [B7/B5, Ground]	1
2	1205540	(00000000–)	Boot, Terminal, Battery, 1/0–2/0ga, Blk	6
3	1072368	(00000000–)	Cable, 02ga 13.3l Red [M8 Ring/M8 Ring]	2
4	1206317	(00000000–)	Battery, Wet, 12vdc 185ah C/20, W/Ca	3
5	1203979	(00000000–)	Tray, Battery [B5]	1
6	630375	(00000000–)	Spacer, Battery, Foam, 1.25 X 3.3 X 13.7	1
7	1072365	(00000000–)	Cable, 02ga 21.6l Red [M8 Ring / And.]	1
8	1072935	(00000000–)	Cable, Assy, Fuse [B5, 100a, Propel] (Includes Ferrite)	1

BATTERY GROUP, 168AH C5 WET LEAD ACID (EUROPE)

355280

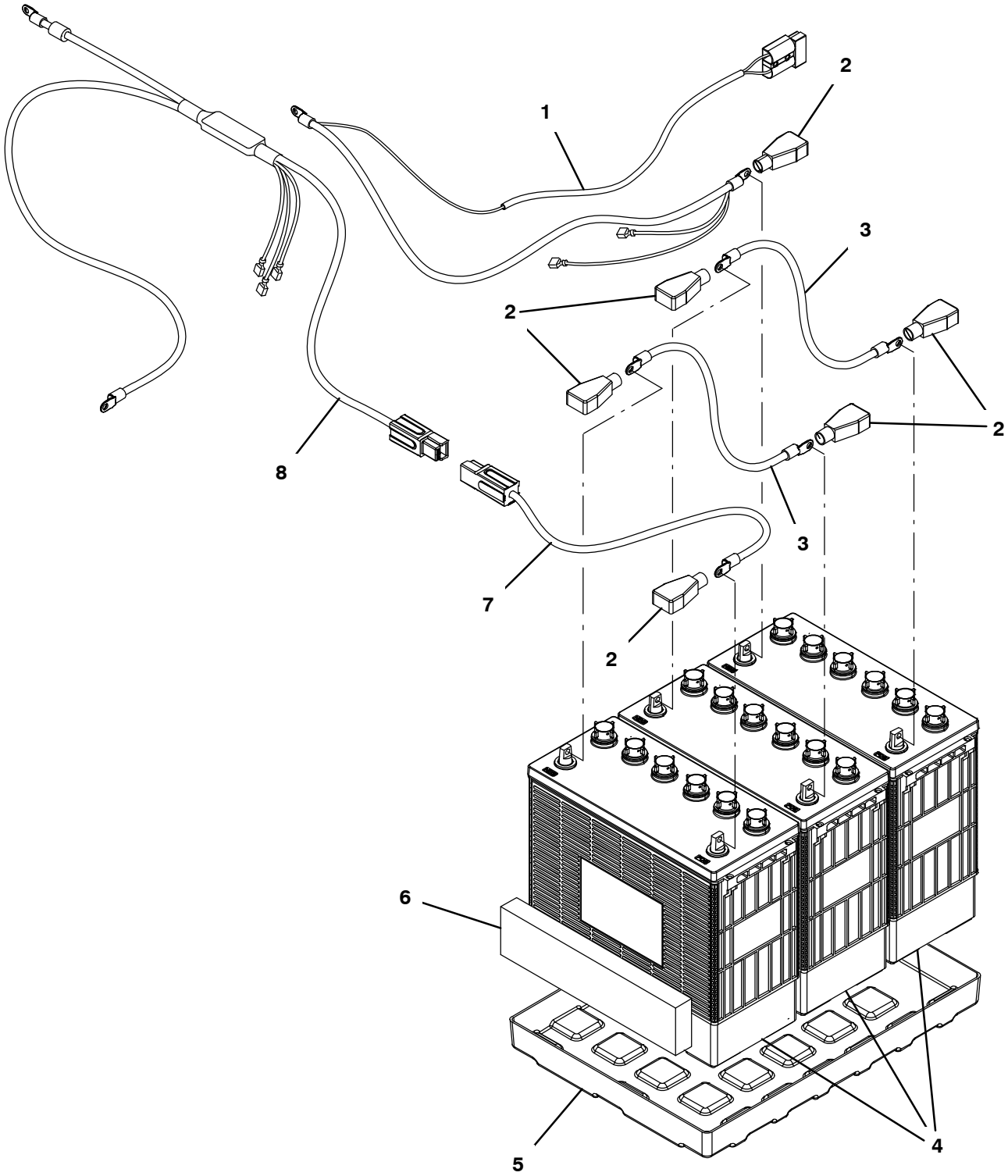

BATTERY GROUP, 168AH C5 WET LEAD ACID (EUROPE)

Ref.	Part No.	Serial Number	Description	Qty.
1	1072939	(00000000–)	Cable, Assy [B7/B5, Ground]	1
2	1205540	(00000000–)	Boot, Terminal, Battery, 1/0–2/0ga, Blk	6
3	1072368	(00000000–)	Cable, 02ga 13.3l Red [M8 Ring/M8 Ring]	2
4	1215207	(00000000–)	Battery, Wet, 12vdc 168ah C5	3
5	1203979	(00000000–)	Tray, Battery [B5]	1
6	630375	(00000000–)	Spacer, Battery, Foam, 1.25 X 3.3 X 13.7	1
7	1072365	(00000000–)	Cable, 02ga 21.6l Red [M8 Ring / And.]	1
8	1072935	(00000000–)	Cable, Assy, Fuse [B5, 100a, Propel] (Includes Ferrite)	1

BATTERY GROUP, 225AH C20 WET LEAD ACID

355232

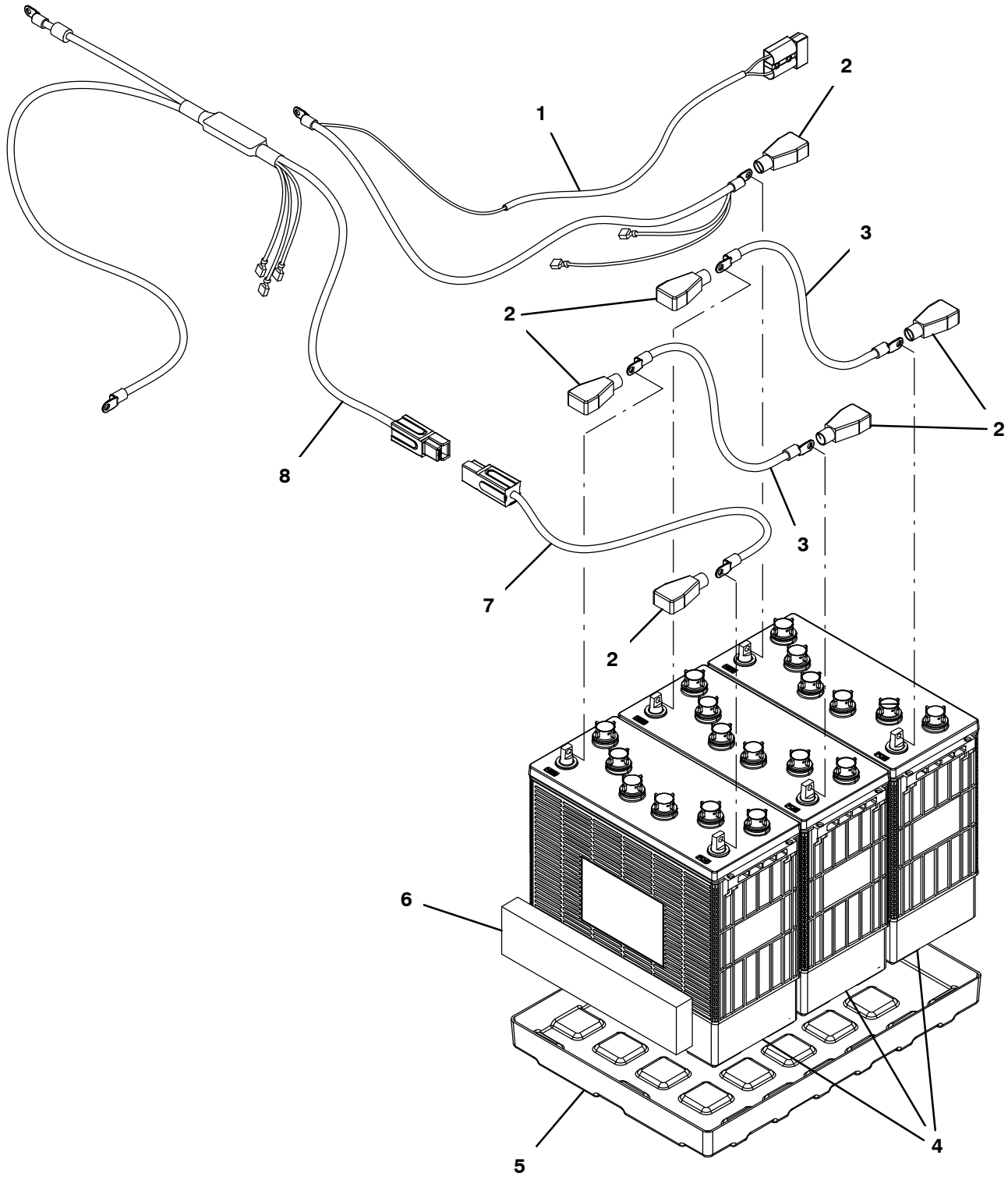

BATTERY GROUP, 225AH C20 WET LEAD ACID

Ref.	Part No.	Serial Number	Description	Qty.
1	1072939	(00000000–)	Cable, Assy [B7/B5, Ground]	1
2	1205540	(00000000–)	Boot, Terminal, Battery, 1/0–2/0ga, Blk	6
3	1072368	(00000000–)	Cable, 02ga 13.3l Red [M8 Ring/M8 Ring]	2
4	1070591	(00000000–)	Battery, Wet, 12vdc 0225ah, W/ Carton	3
5	1203979	(00000000–)	Tray, Battery [B5]	1
6	630375	(00000000–)	Spacer, Battery, Foam, 1.25 X 3.3 X 13.7	1
7	1072365	(00000000–)	Cable, 02ga 21.6l Red [M8 Ring / And.]	1
8	1072935	(00000000–)	Cable, Assy, Fuse [B5, 100a, Propel] (Includes Ferrite)	1

BATTERY GROUP, 245AH C20 AGM SEALED

355233

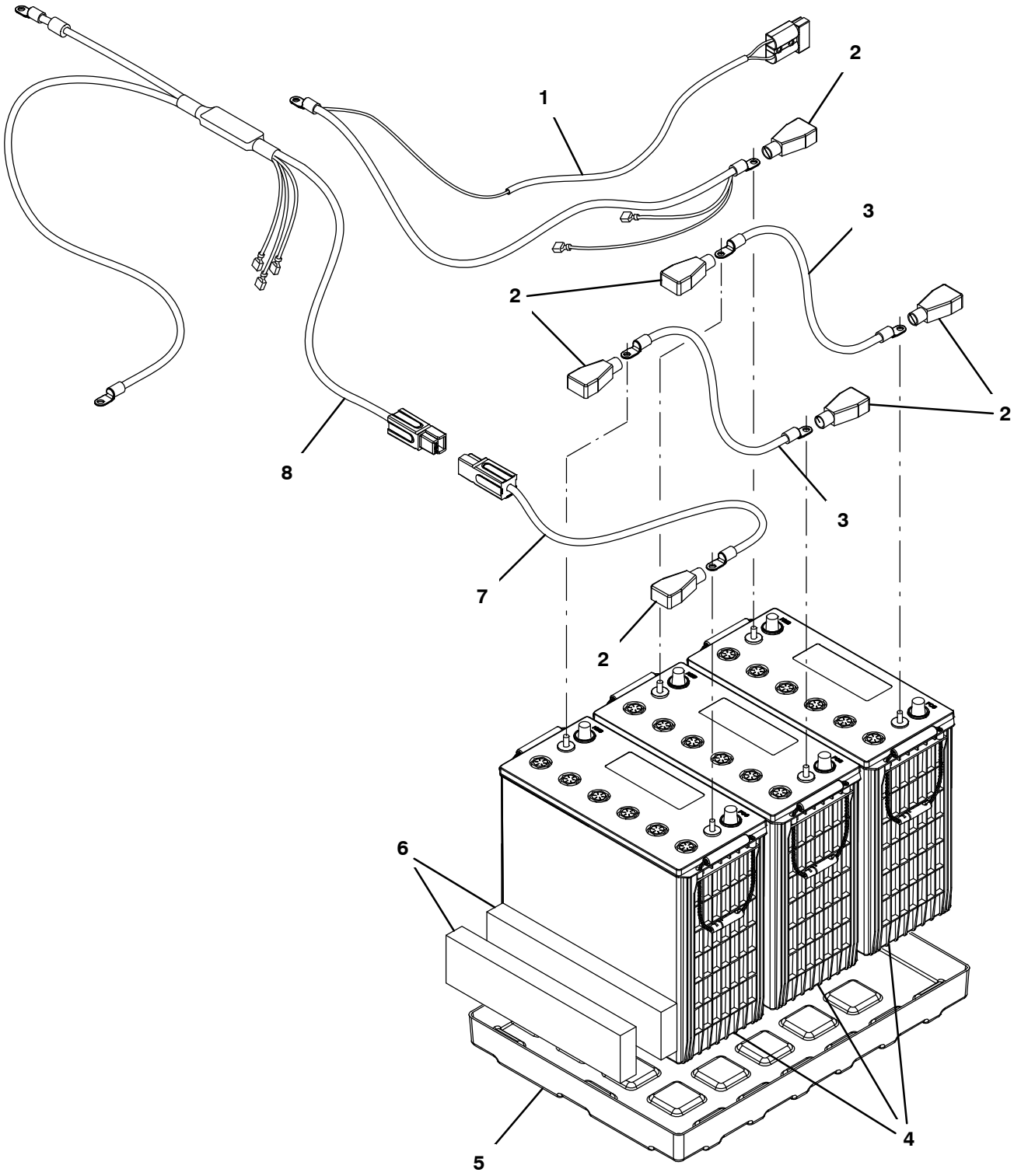

BATTERY GROUP, 245AH C20 AGM SEALED

Ref.	Part No.	Serial Number	Description	Qty.
1	1072939	(00000000–)	Cable, Assy [B7/B5, Ground]	1
2	1205540	(00000000–)	Boot, Terminal, Battery, 1/0–2/0ga, Blk	6
3	1072368	(00000000–)	Cable, 02ga 13.3l Red [M8 Ring/M8 Ring]	2
4	1260425	(00000000–)	Battery,Agm,12vdc,245ah	3
5	1203979	(00000000–)	Tray, Battery [B5]	1
6	630375	(00000000–)	Spacer, Battery, Foam, 1.25 X 3.3 X 13.7	2
7	1072365	(00000000–)	Cable, 02ga 21.6l Red [M8 Ring / And.]	1
8	1072935	(00000000–)	Cable, Assy, Fuse [B5, 100a, Propel] (Includes Ferrite)	1

BATTERY GROUP, 210AH C5 AGM SEALED (EUROPE)

355233

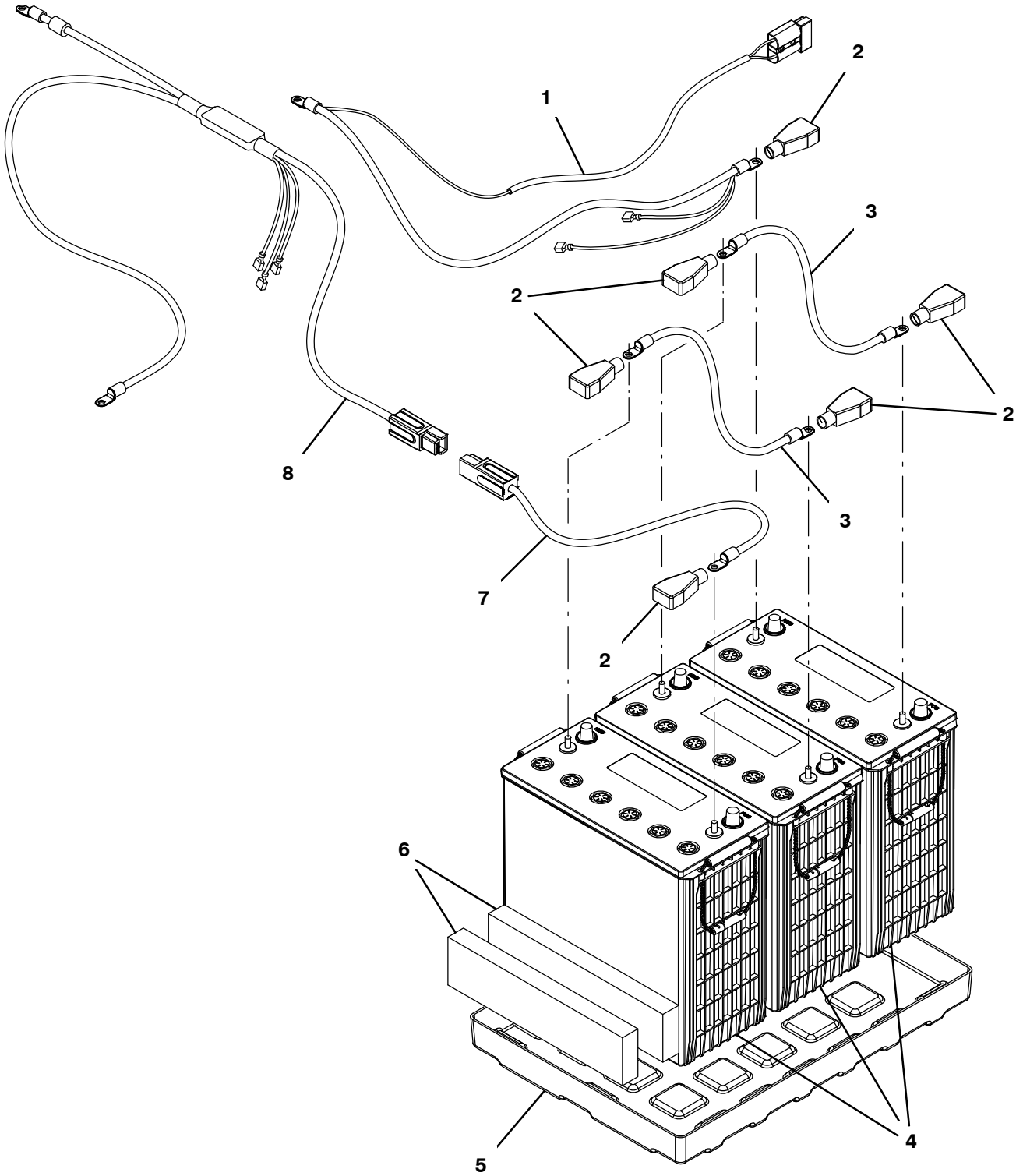

BATTERY GROUP, 210AH C5 AGM SEALED (EUROPE)

Ref.	Part No.	Serial Number	Description	Qty.
1	1072939	(00000000–)	Cable, Assy [B7/B5, Ground]	1
2	1205540	(00000000–)	Boot, Terminal, Battery, 1/0–2/0ga, Blk	6
3	1072368	(00000000–)	Cable, 02ga 13.3l Red [M8 Ring/M8 Ring]	2
4	1260425	(00000000–)	Battery,Agm,12vdc,245ah (210Ah Europe)	3
5	1203979	(00000000–)	Tray, Battery [B5]	1
6	630375	(00000000–)	Spacer, Battery, Foam, 1.25 X 3.3 X 13.7	2
7	1072365	(00000000–)	Cable, 02ga 21.6l Red [M8 Ring / And.]	1
8	1072935	(00000000–)	Cable, Assy, Fuse [B5, 100a, Propel] (Includes Ferrite)	1

MANUAL BATTERY WATERING SYSTEM (S/N 11025937–)

355853

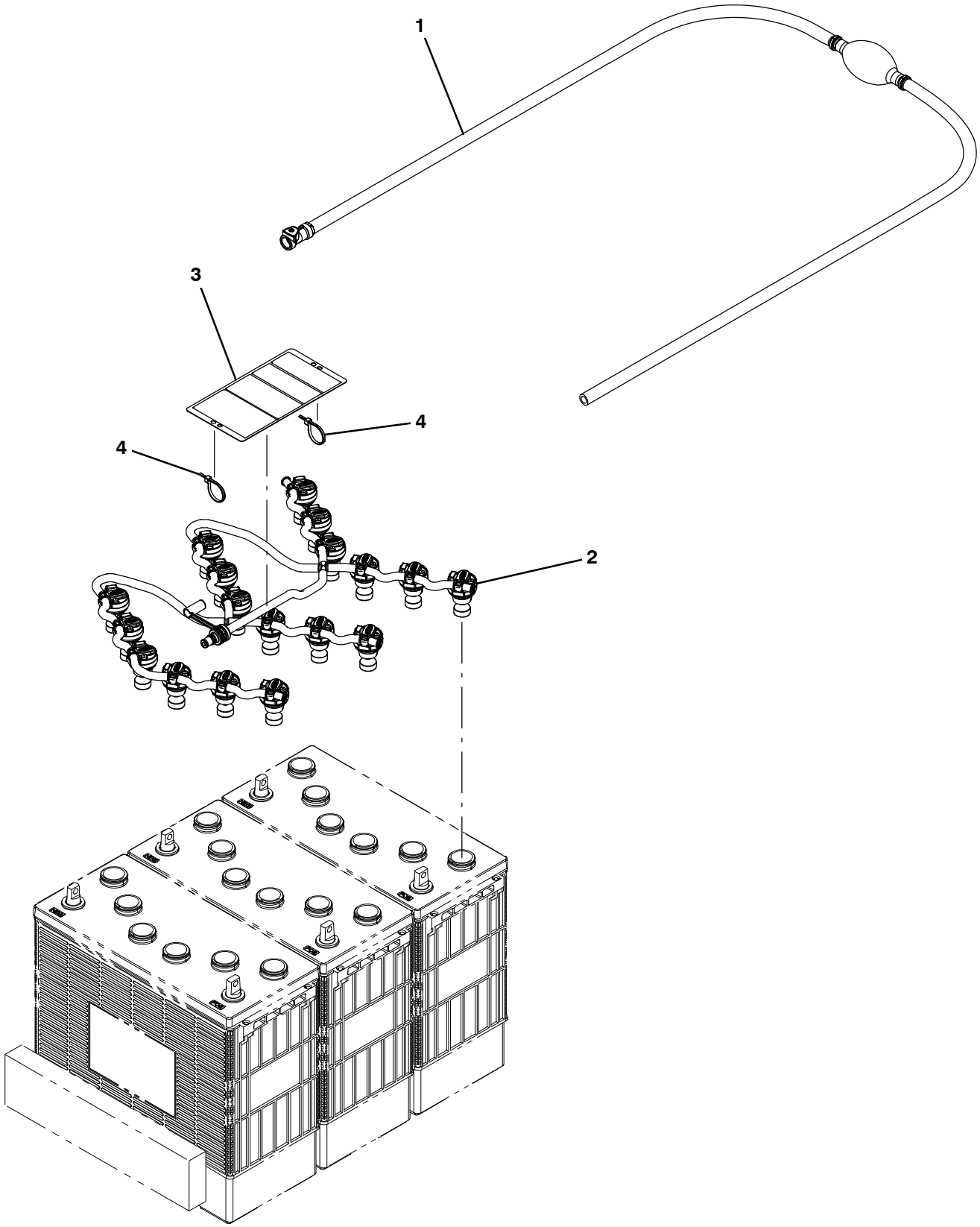

MANUAL BATTERY WATERING SYSTEM (S/N 11025937–)

	Ref.	Part No.	Serial Number	Description	Qty.
∇		9021750*	(11025937–)	Fill Kit, 3 Btry, Mnl, Ci [Trojan]	1
▲	1	1236295	(11025937–)	Pump, Hand, Battery	1
▲	2	1257449	(11025937–)	Manifold Assy, Water, 3 Btry [Trojan]	1
▲	3	1253250	(11025937–)	Label, Tag, Battery [Bwt Watering]	1
▲	4	130773	(11025397–)	Tie, Cable, Nyl, 11.0l, .14w, 3.0 Max. D	2

*THIS KIT IS INTENDED FOR USE WITH TROJAN® LEAD ACID BATTERIES ONLY.

∇ ASSEMBLY
▲ INCLUDED IN ASSEMBLY

HYDROLINK® BATTERY WATERING SYSTEM KIT (S/N 00000000–11025936)

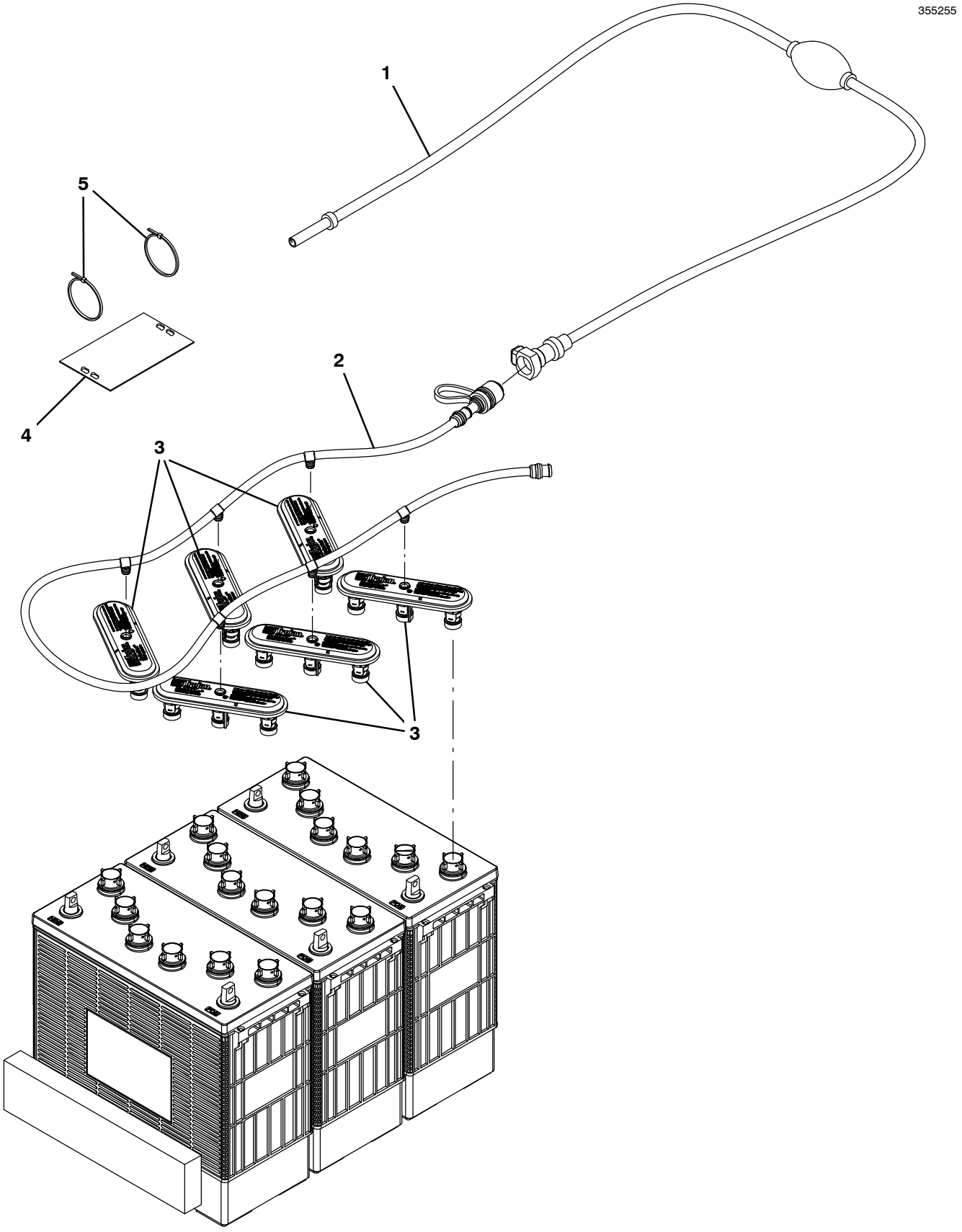

HYDROLINK® BATTERY WATERING SYSTEM KIT (S/N 00000000–11025936)

	Ref.	Part No.	Serial Number	Description	Qty.
∇		9010301*	(00000000–11025936)	Pump Kit, Fill, Battery,36vdc,Ci[Trojan] (Replaced By 9021750)	1
▲	1	1058939	(00000000–11025936)	Pump Kit, Fill, Battery	1
▲	2	1201997	(00000000–11025936)	Tube, Water, Battery, 36vdc [Trojan]	1
▲	3	1204142	(00000000–11025936)	Cap, Fill, Battery [Trojan]	6
▲	4	1071084	(00000000–11025936)	Label, Tag, Battery [Hydrolink Watering]	1
▲	5	130773	(00000000–11025936)	Tie, Cable, Nyl, 11.0l, .14w, 3.0 Max. D	2

*THIS KIT IS INTENDED FOR USE WITH TROJAN® LEAD ACID BATTERIES ONLY.

HYDROLINK® IS A REGISTERED TRADEMARK OF TROJAN® BATTERY COMPANY.

∇ ASSEMBLY
▲ INCLUDED IN ASSEMBLY

BATTERY WATERING SYSTEM (FOR BATTERY 1215207 – EUROPE)

355397

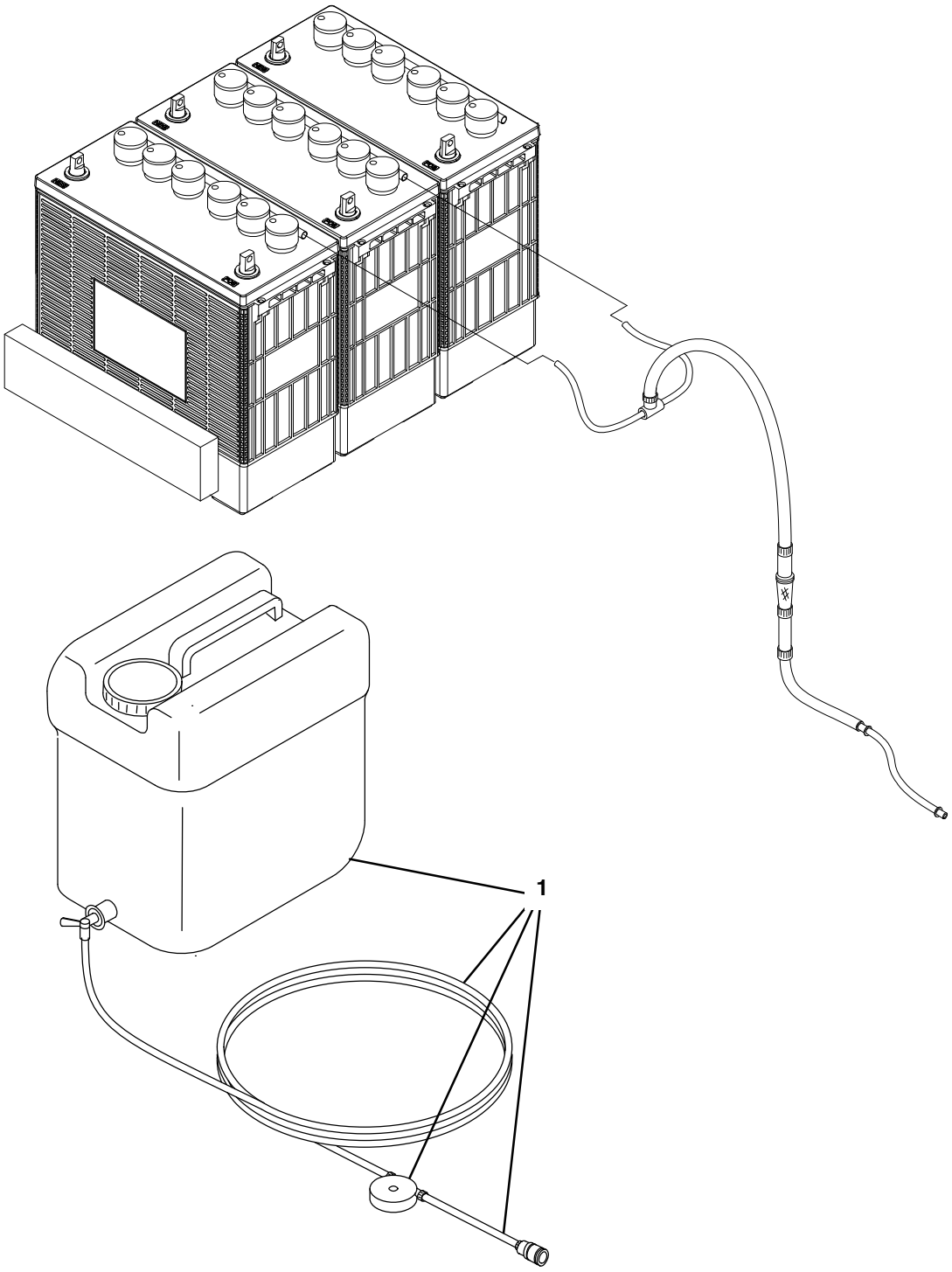

Ref.	Part No.	Serial Number	Description	Qty.
1	1072526	(00000000–)	Tank, Water, 30.0l, Battery Fill Sys	1

IRIS® TELEMETRY GROUP (S/N 00000000 – 11120705)

355707

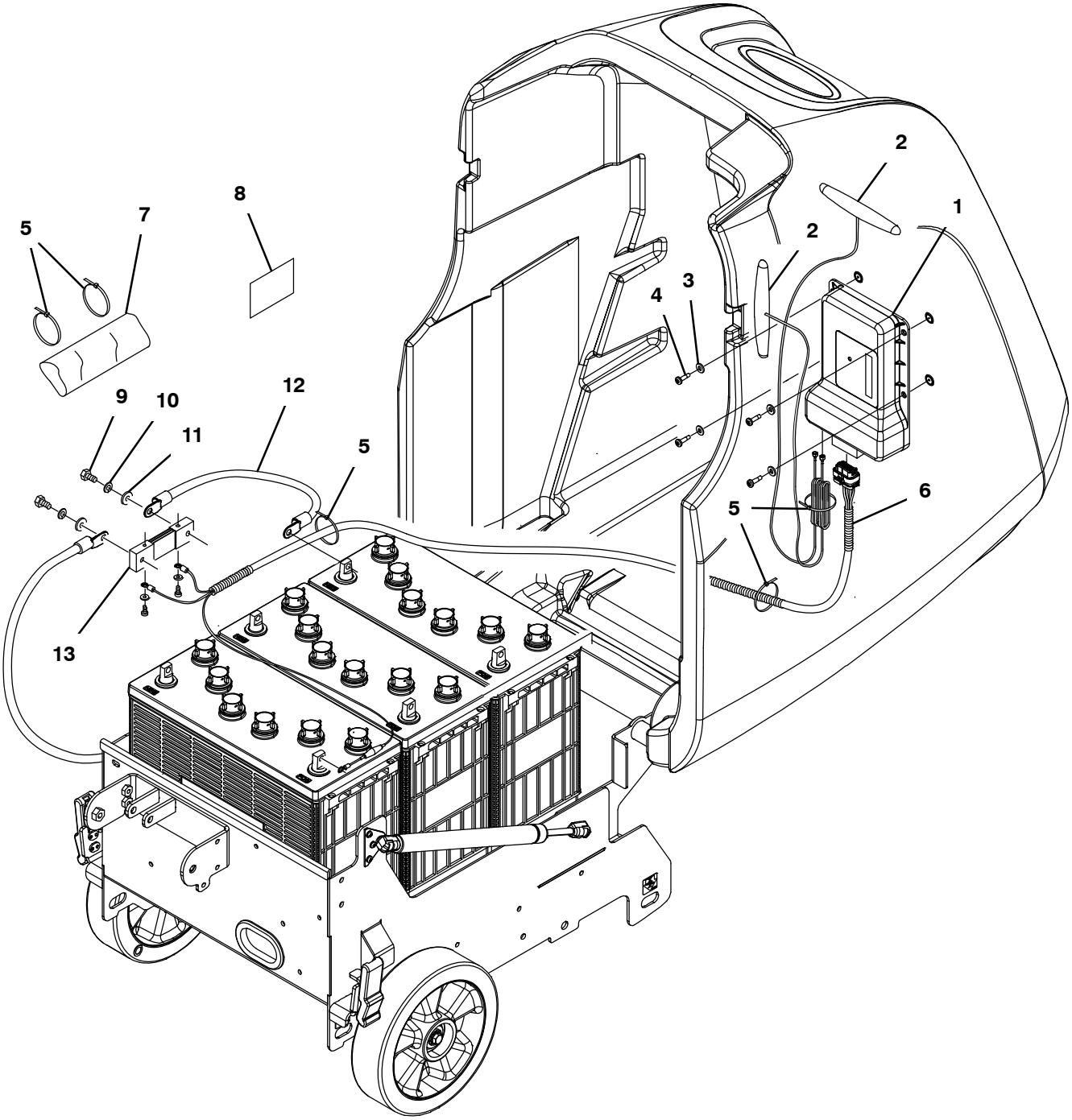

IRIS® TELEMETRY GROUP (S/N 00000000 – 11120705)

	Ref.	Part No.	Serial Number	Description	Qty.
∇		9021969*	(00000000–APR2020)	Telemetry Kit, 3g–4g, Na [B5, B7, T7] (North America – Kit Intended for Upgrading from 3G to 4G Only)	1
▲	1	9010085*	(00000000–11120705)	Control Box Assy Kit, Replmt, Telem[Usa]	1
▲	2	1247522	(MAY2020–11120705)	Antenna, Telem [4g, 72”]	2
∇		9015256*	(00000000–11120705)	Telemetry Kit, Ci [B7/Sg7 B5/Sg5 Usa] (North America)	1
▲	1	9010085*	(00000000–11120705)	Control Box Assy Kit, Replmt, Telem[Usa]	1
▲	2	1247522	(MAY2020–11120705)	Antenna, Telem [4g, 72”]	2
	2	1070659	(00000000–APR2020)	Antenna, Telem, 70 In [Gprs]	1
▲	3	01683	(00000000–11120705)	Washer, Flat, 10, Ss	4
▲	4	1043573	(00000000–11120705)	Screw, #10–14 X 0.675, Spl[Shcs,Selftap]	4
▲	5	49266	(00000000–11120705)	Tie, Cable, Nyl, 07.3l .19w 1.8 Max D	5
▲∇	6	1070495	(00000000–11120705)	Harness, Ele [Telemetry, 6200e]	1
▲▲		9009990	(00000000–11120705)	Vr, Fuse, 002a, 250vdc, Cartridge	1
▲	7	1217818	(00000000–11120705)	Sleeve, Heatshrink, 1.50id, 07.0l	1
▲	8	1069580	(00000000–11120705)	Label, Mach, Telem [Usa, Intl]	1
▲	9	15675	(00000000–11120705)	Screw, Hex, M8 X 1.25 X 16, Ss	2
▲	10	43952	(00000000–11120705)	Washer, Lock, Int, 0.31, Ss	2
▲	11	01685	(00000000–11120705)	Washer, Flat, 0.38b 0.88d .08, Ss	2
▲	12	63740	(00000000–11120705)	Cable, 06ga 09.0l Blk .31ring /.31ring	1
▲	13	1217304	(00000000–11120705)	Shunt [Empro, 250amp/50mv, Metric]	1
∇		9015257*	(00000000–11120705)	Telemetry Kit, Ci [B7/Sg7 B5/Sg5 Intl] (Europe / International)	1
▲	1	9010086*	(00000000–11120705)	Control Box Assy Kit, Rplmt, Telem[Intl]	1
▲	2	1247522	(MAY2020–11120705)	Antenna, Telem [4g, 72”]	1
		1070659	(00000000–APR2020)	Antenna, Telem, 70 In [Gprs]	1
▲	3	01683	(00000000–11120705)	Washer, Flat, 10, Ss	4
▲	4	1043573	(00000000–11120705)	Screw, #10–14 X 0.675, Spl[Shcs,Selftap]	4
▲	5	49266	(00000000–11120705)	Tie, Cable, Nyl, 07.3l .19w 1.8 Max D	5
▲∇	6	1070495	(00000000–11120705)	Harness, Ele [Telemetry, 6200e]	1
▲▲		9009990	(00000000–11120705)	Vr, Fuse, 002a, 250vdc, Cartridge	1
▲	7	1217818	(00000000–11120705)	Sleeve, Heatshrink, 1.50id, 07.0l	1
▲	8	1069580	(00000000–11120705)	Label, Mach, Telem [Usa, Intl]	1
▲	9	15675	(00000000–11120705)	Screw, Hex, M8 X 1.25 X 16, Ss	2
▲	10	43952	(00000000–11120705)	Washer, Lock, Int, 0.31, Ss	2
▲	11	01685	(00000000–11120705)	Washer, Flat, 0.38b 0.88d .08, Ss	2
▲	12	63740	(00000000–11120705)	Cable, 06ga 09.0l Blk .31ring /.31ring	1
▲	13	1217304	(00000000–11120705)	Shunt [Empro, 250amp/50mv, Metric]	1

*** Requires Tennant *True* service or an authorized Tennant service provider**.

∇ ASSEMBLY

▲ INCLUDED IN ASSEMBLY

LABEL GROUP

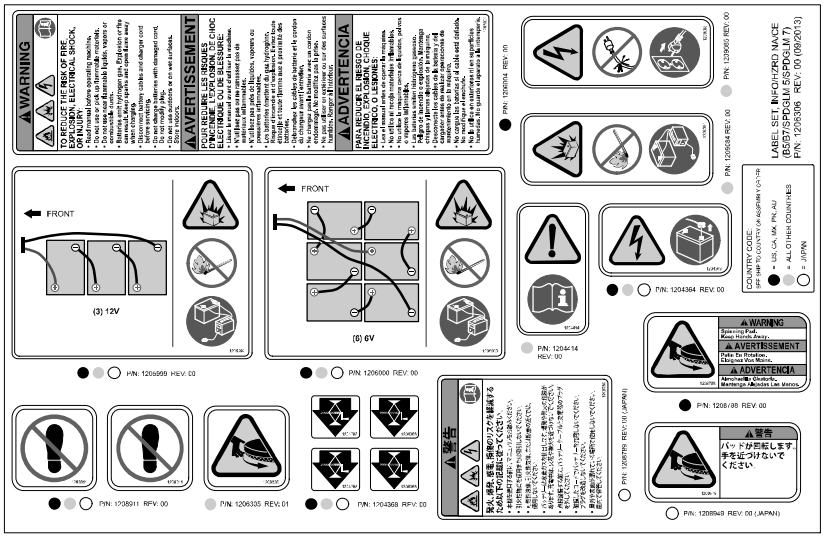

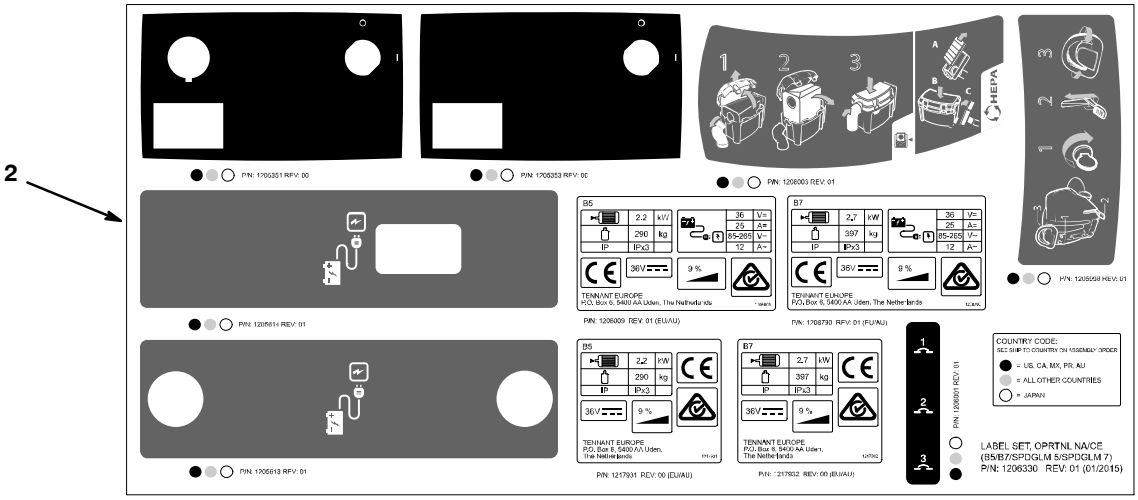

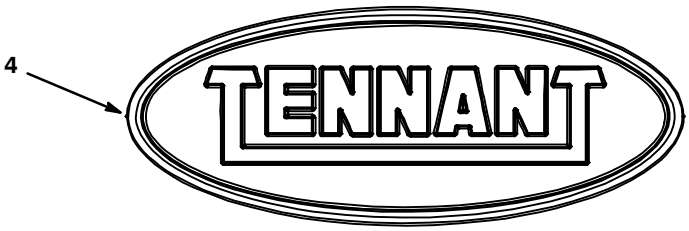

Ref.	Part No.	Serial Number	Description	Qty.
1	1206306	(00000000–)	Label, Set, Info/Hzrd [Na/Ce]	1
2	1206330	(00000000–)	Label, Set, Operational	1
3	1205994	(00000000–)	Label, Decal, B5	2
4	1213114	(00000000–)	Label, Logo, 05.5l, Blk/Sil [Tennant]	1
4	1205477	(00000000–)	Nameplate, Tennant, Dome, 5.5in (Replaced By 1213114)	1

PARKING BRAKE GROUP

355228

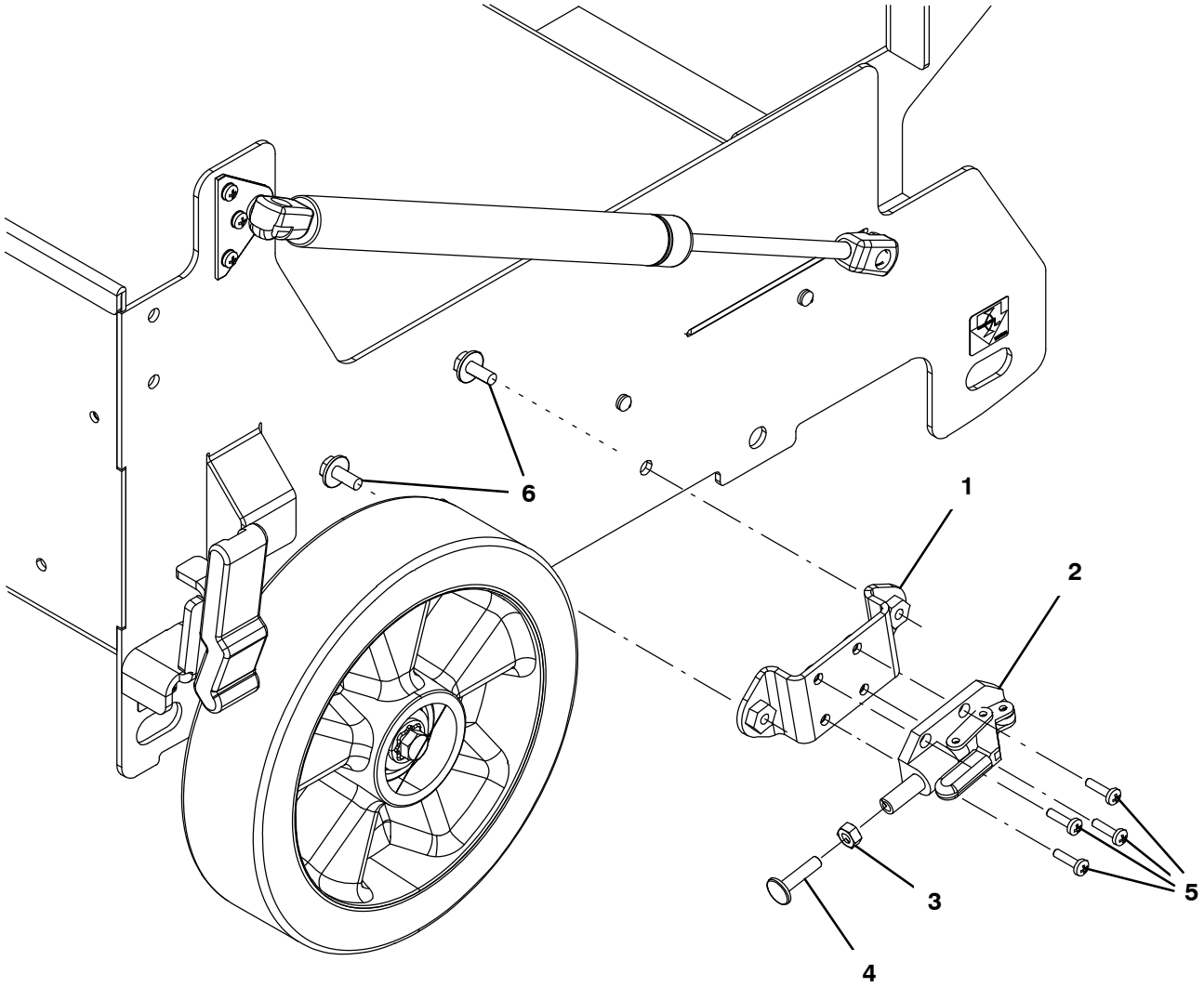

	Ref.	Part No.	Serial Number	Description	Qty.
∇		9012792	(00000000–)	Brake Kit, Parking, Afmkt, W/ Hdwr	1
▲	1	1206560	(00000000–)	Brake, Wldt	1
▲	2	1013718	(00000000–)	Clamp, Brake, Parking [T3]	1
▲	3	07785	(00000000–)	Nut, Hex, Std, M6 X 1.00, Ss	1
▲	4	1040803	(11083246–)	Screw, Hex, M6 X 1.00 X 30mm, Ss	1
▲	4	1017416	(00000000–11083245)	Screw, Weld, M6 X 1.00 X 25, Thru, Ss	1
▲	5	24265	(00000000–)	Screw, Pan, Phl, M4 X 0.70 X 16, Ss	4
▲	6	1034731	(00000000–)	Screw, Hex, M6 X 1.00 X 16, Ss, Sems	2

∇ ASSEMBLY

▲ INCLUDED IN ASSEMBLY

DOCUMENTATION GROUP (ONLINE ONLY)

Ref.	Part No.	Serial Number	Description	Qty.
1	9011477	(00000000–)	Manual, Parts [B5]	1
2	9011478	(00000000–)	Manual, Service [B5/7, Sg5/7]	1
3	9011480	(00000000–)	Manual, Oprtr [B5/B7, En, Na]	1
3	9011484	(00000000–)	Manual, Oprtr [B5/B7, Es, Na]	1
3	9011486	(00000000–)	Manual, Oprtr [B5/B7, Fr, Na]	1
3	9011488	(00000000–)	Manual, Oprtr [B5/B7, Cn]	1
3	9011492	(00000000–)	Manual, Oprtr [B5/B7, Kr]	1
3	9011494	(00000000–)	Manual, Oprtr [B5/B7, Jp]	1
4	9011483	(00000000–)	Instr, Wall Chart, Na/Apac [B5/B7]	1
5	1206167	(00000000–)	Guide, Onboard Use And Care	1

To view, print, order, download the latest Parts manual, other language Operator manuals, and Use and Care Guides (wall charts), visit:

www.tennantco.com/manual

ELECTRICAL DIAGRAM, PUSH MODEL (Page 1 of 5)

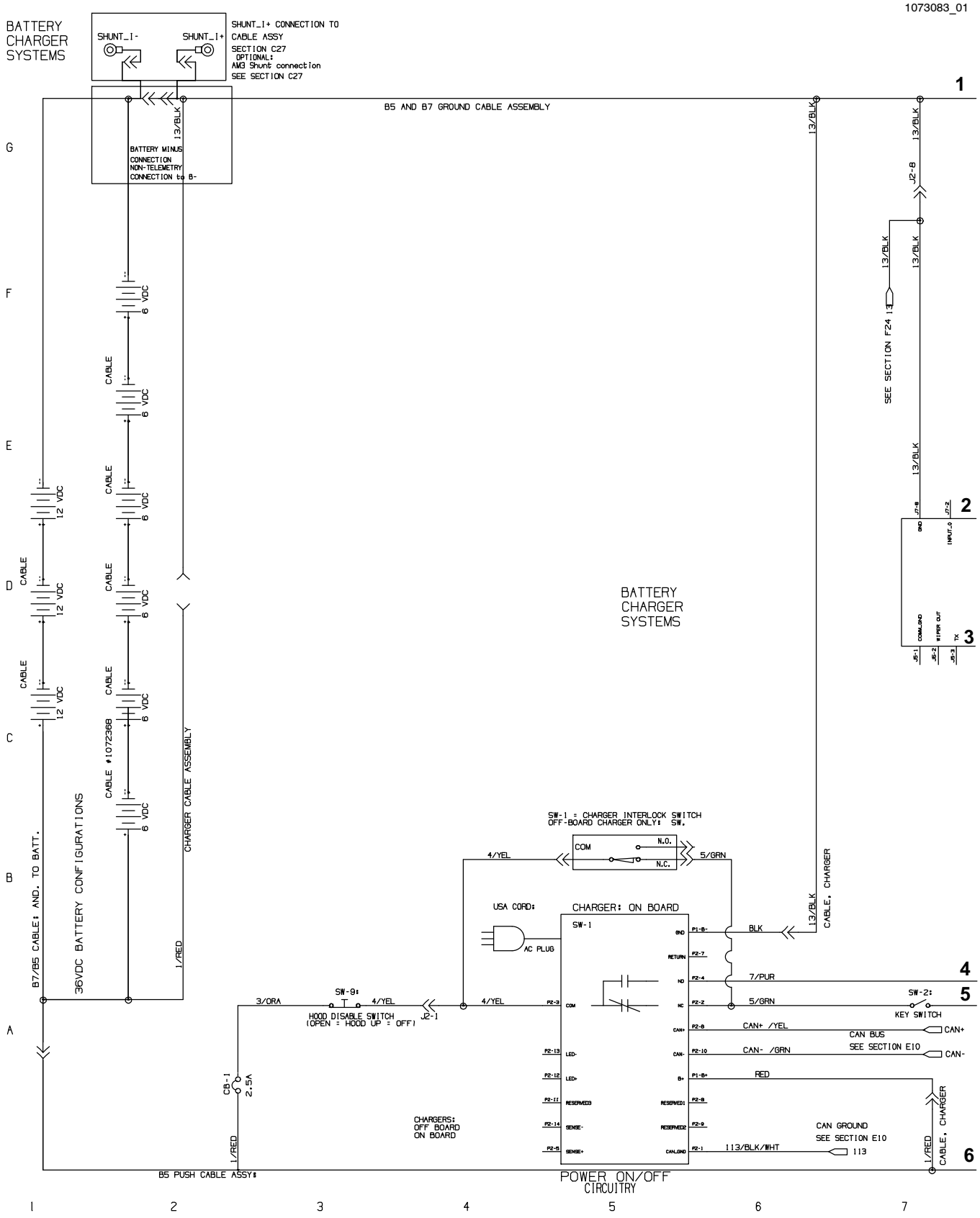

ELECTRICAL DIAGRAM, PUSH MODEL (Page 2 of 5)

1073083_01

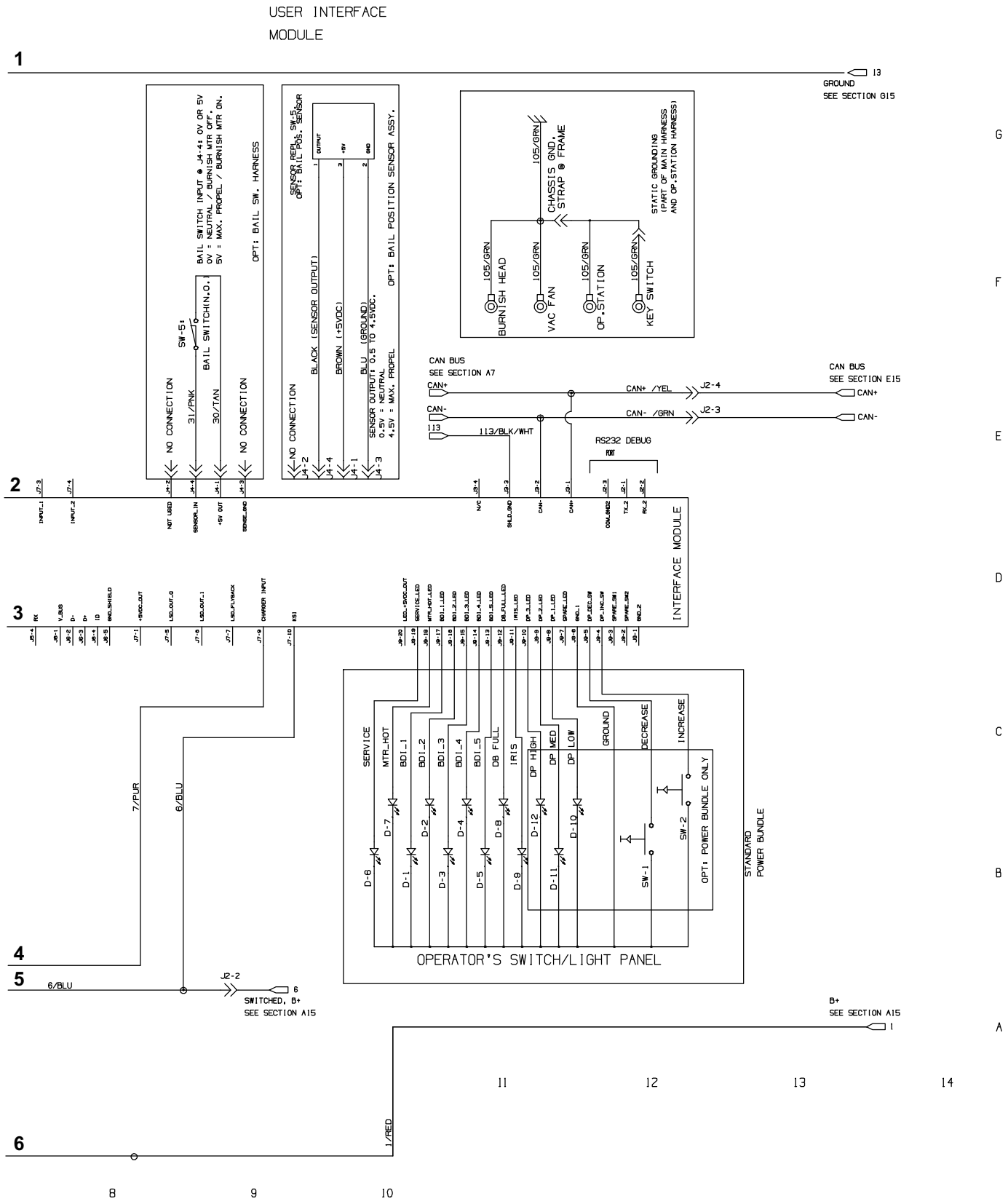

ELECTRICAL DIAGRAM, PUSH MODEL (Page 3 of 5)

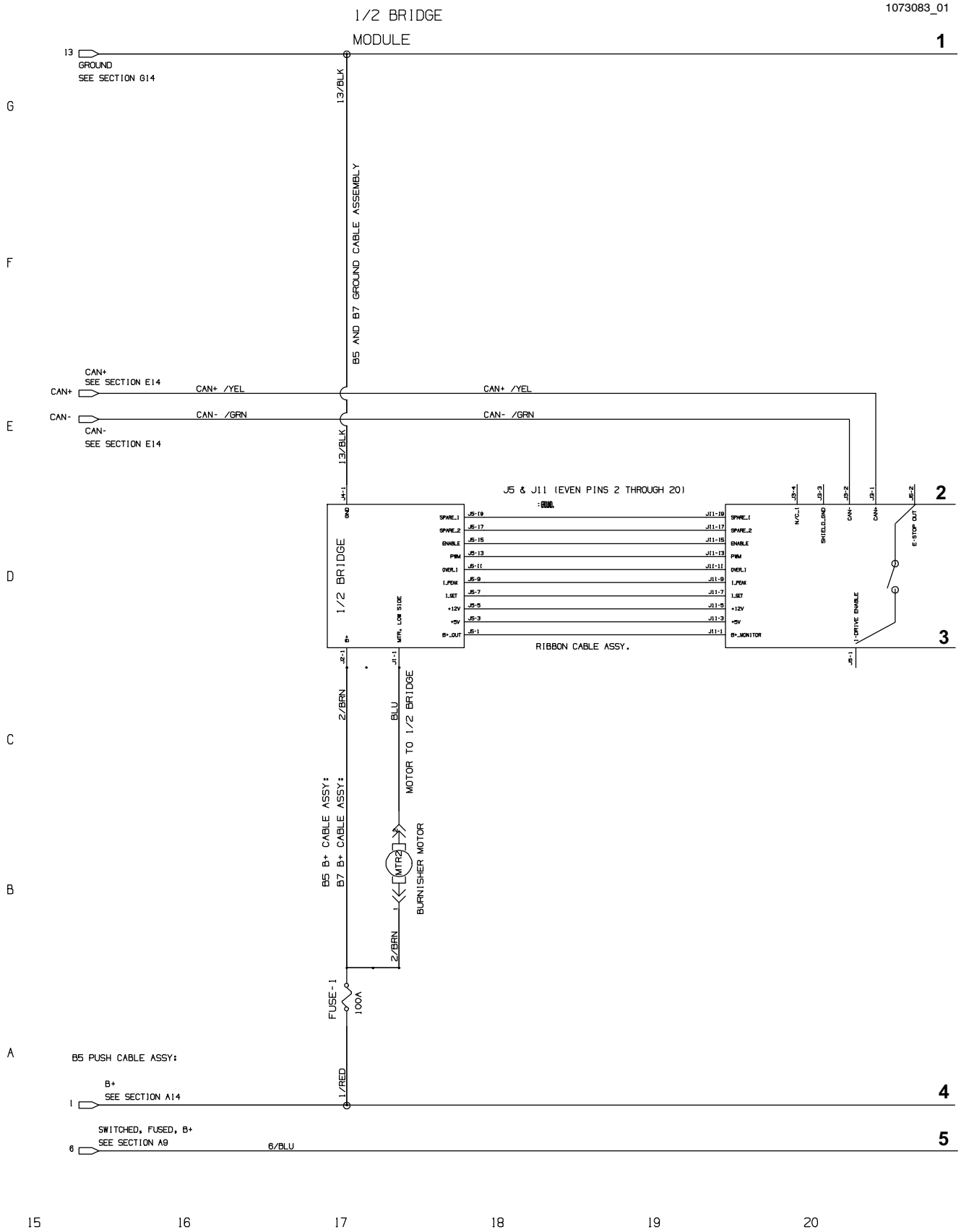

ELECTRICAL DIAGRAM, PUSH MODEL (Page 4 of 5)

1073083_01

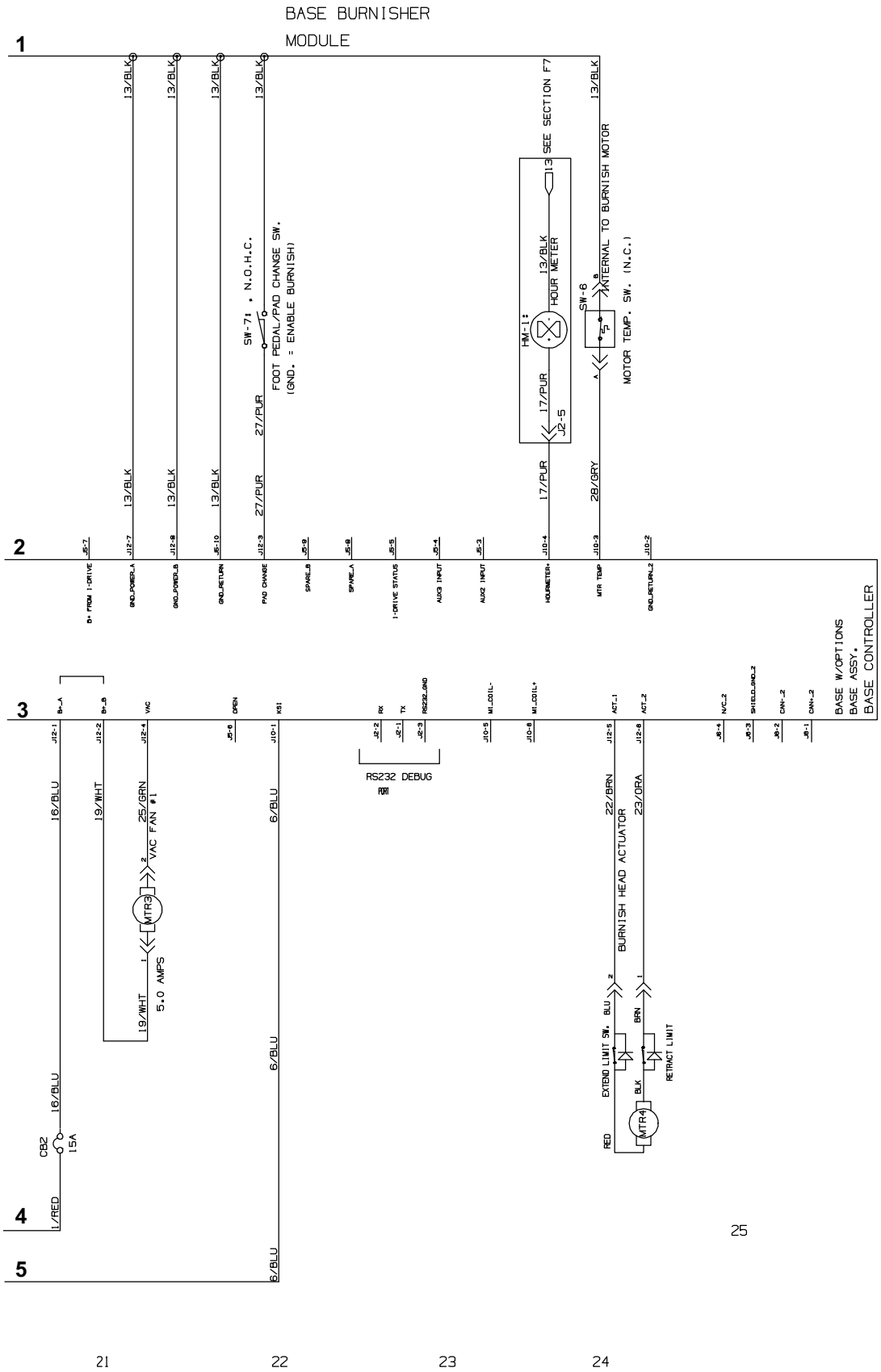

ELECTRICAL DIAGRAM, PUSH MODEL (Page 5 of 5)

1073083_01

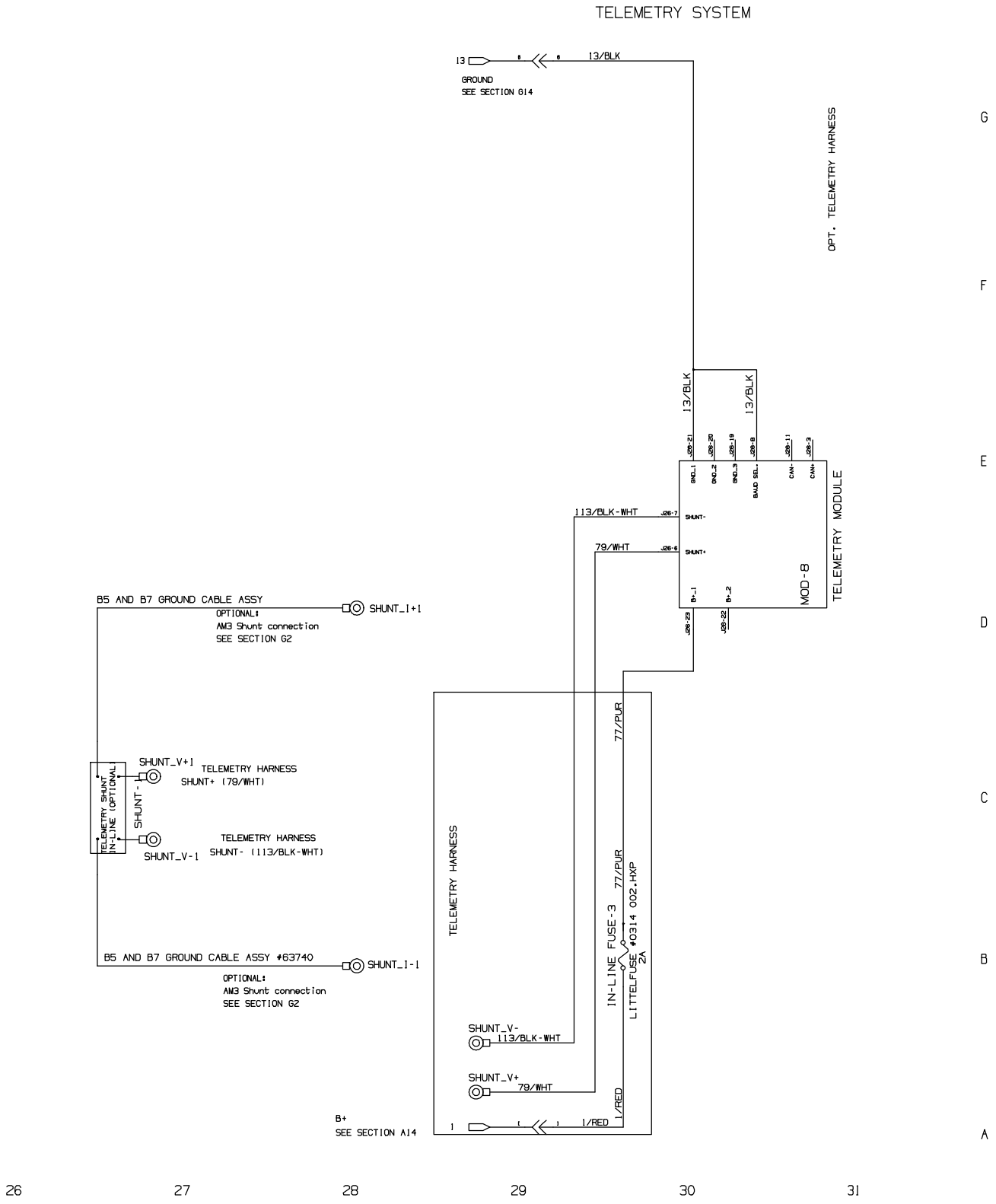

ELECTRICAL DIAGRAM, DRIVE MODEL (Page 1 of 5)

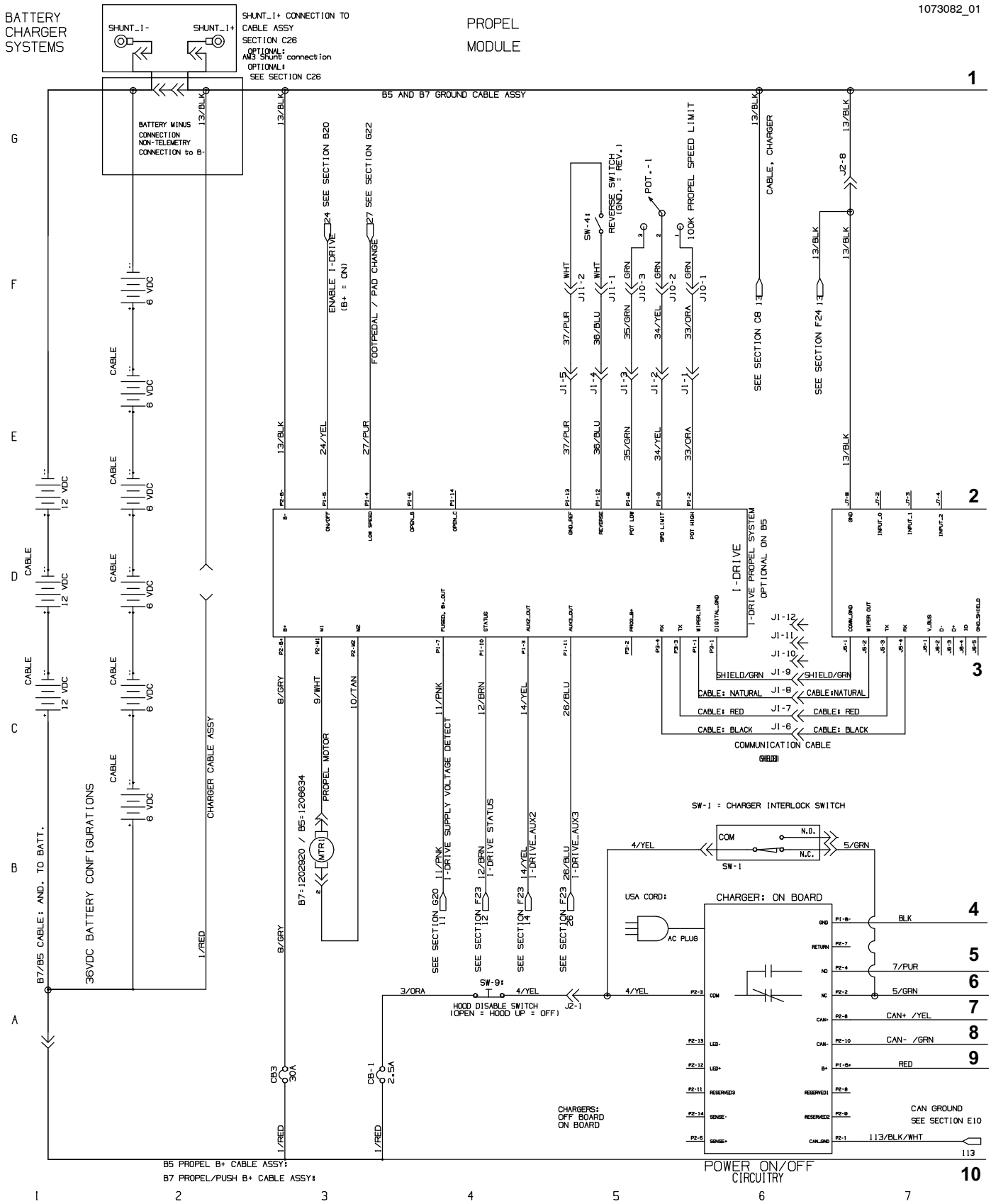

ELECTRICAL DIAGRAM, DRIVE MODEL (Page 2 of 5)

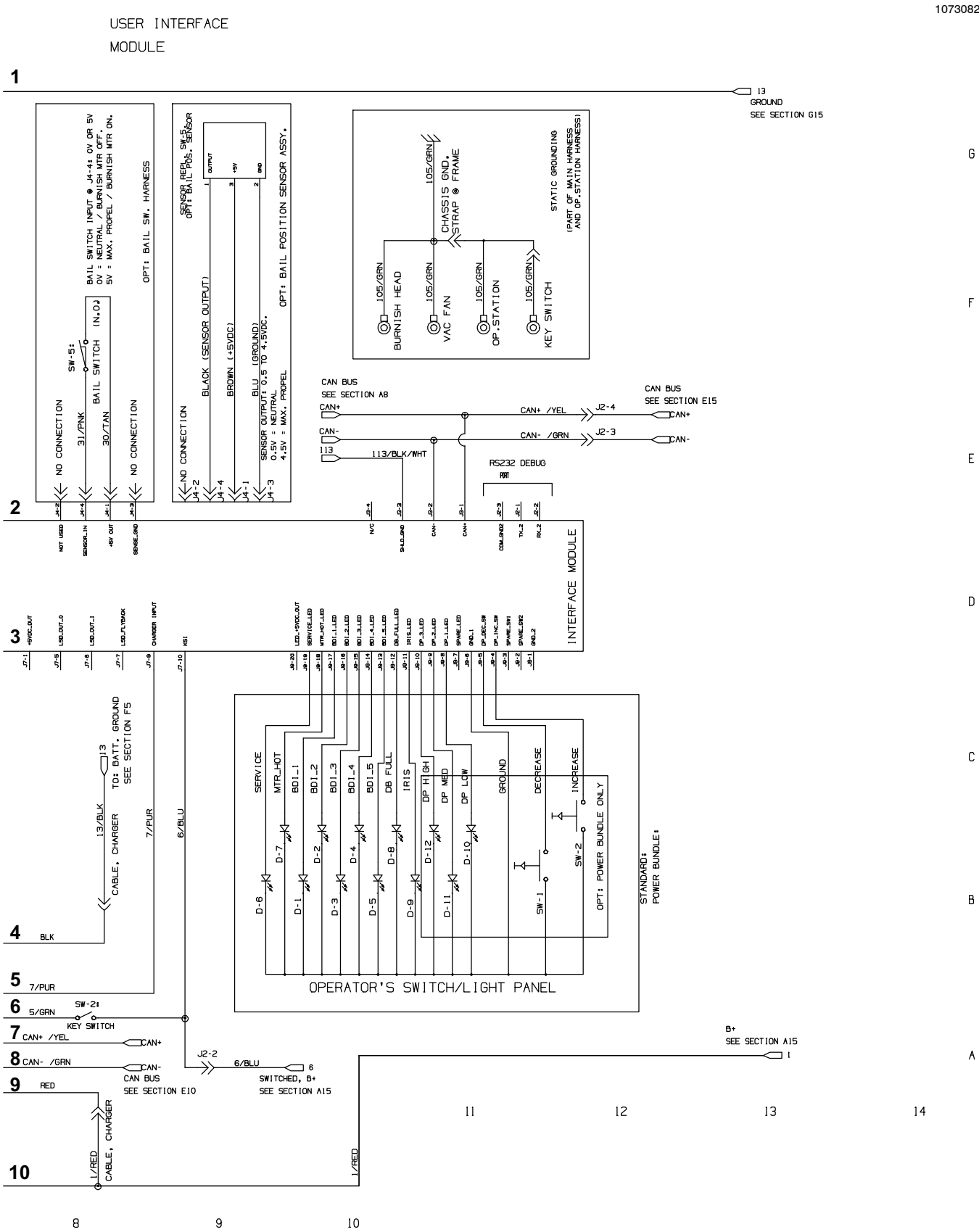

ELECTRICAL DIAGRAM, DRIVE MODEL (Page 3 of 5)

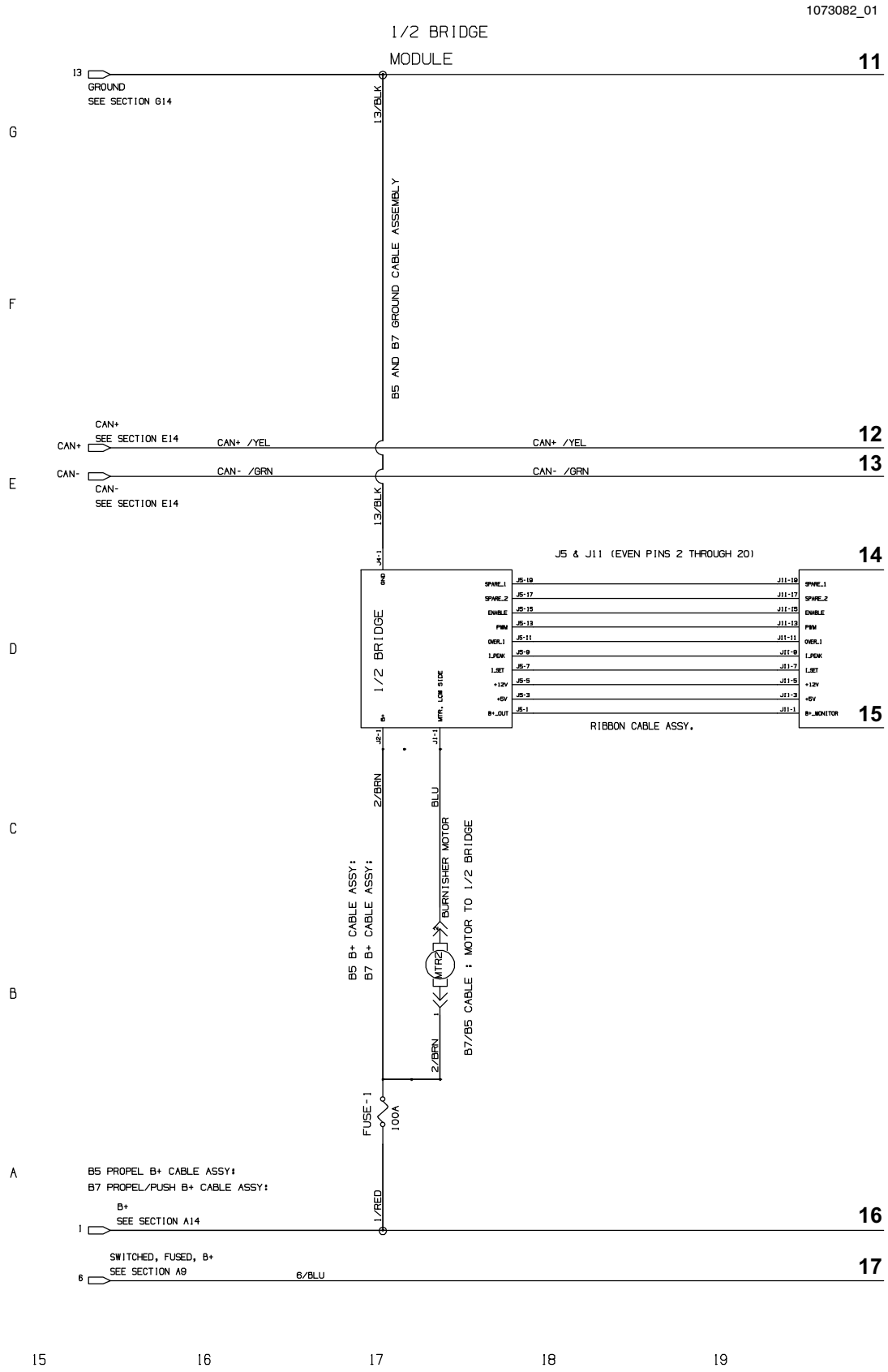

ELECTRICAL DIAGRAM, DRIVE MODEL (Page 4 of 5)

1073082_01

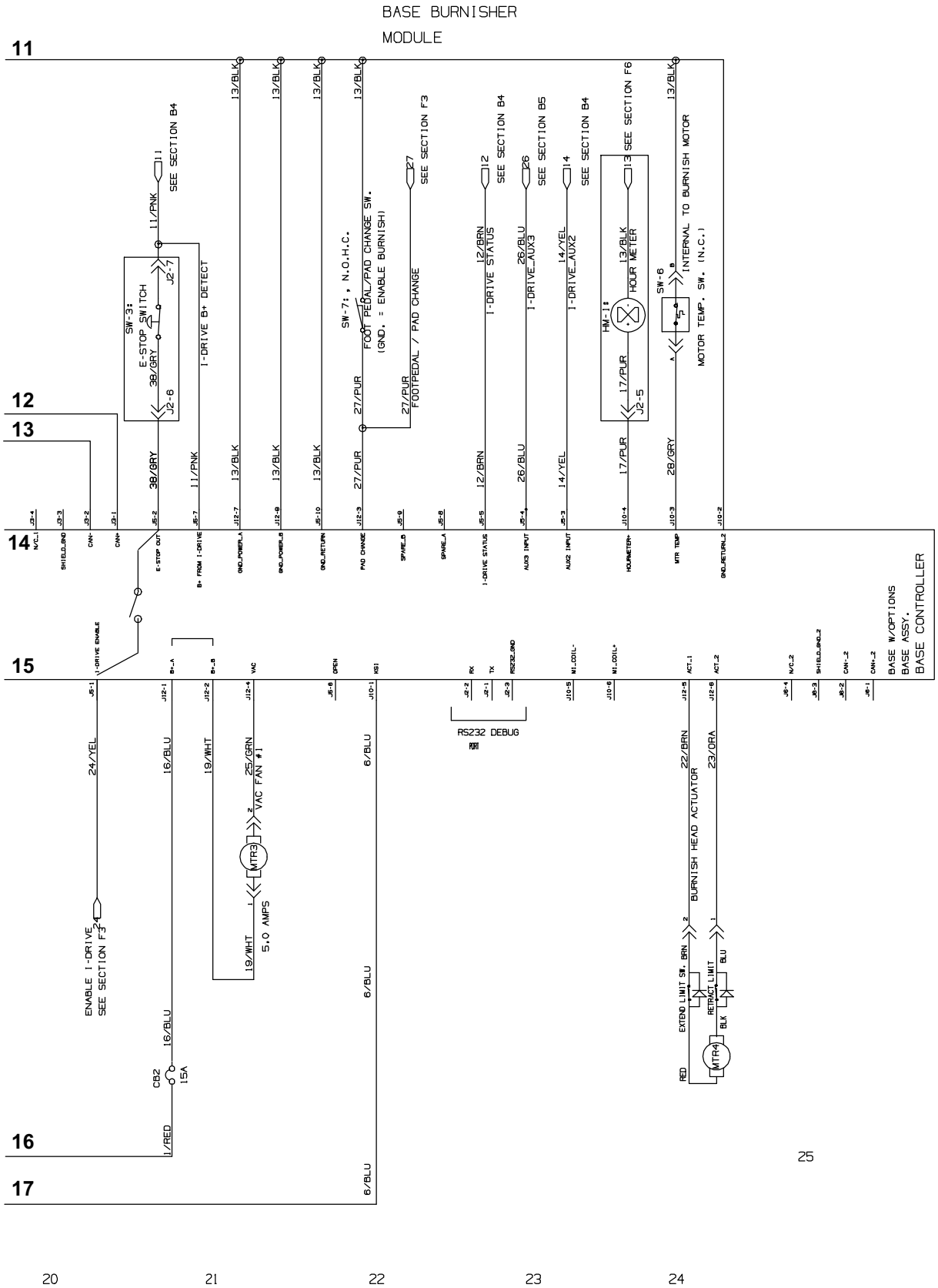

ELECTRICAL DIAGRAM, DRIVE MODEL (Page 5 of 5)

1073082_01

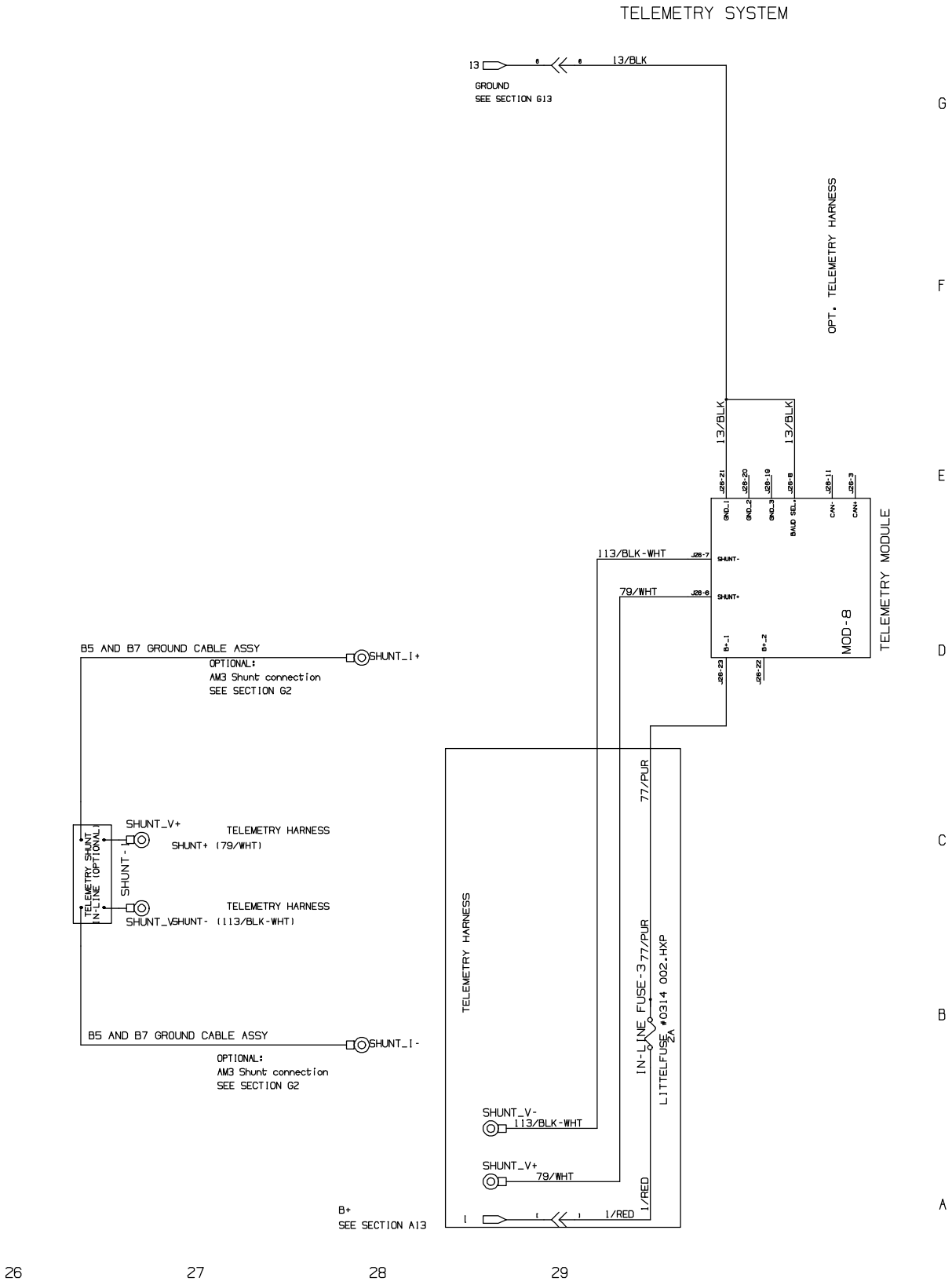

WIRE HARNESS, TELEMETRY

1075352_00

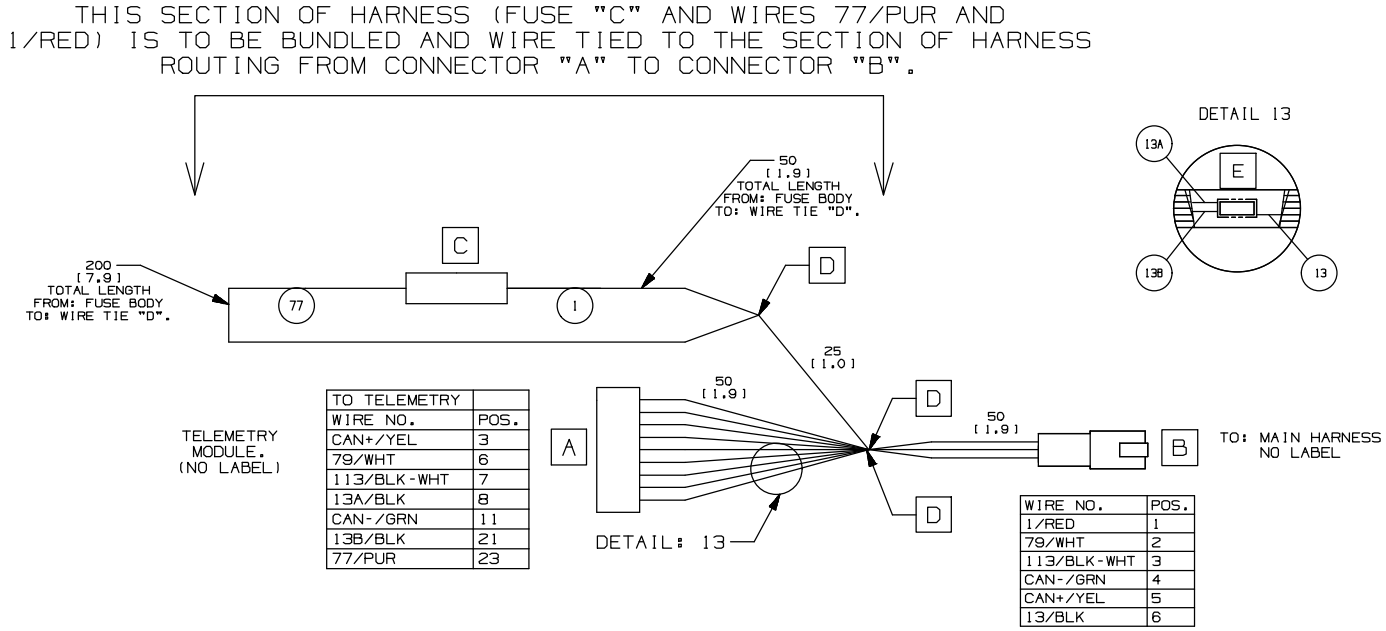

WIRE NO	GA	SPEC
1/RED	20	SEE NOTE #12
13/BLK	20	SEE NOTE #12
13A/BLK	20	SEE NOTE #12
13B/BLK	20	SEE NOTE #12
77/PUR	20	SEE NOTE #12
79/WHT	20	SEE NOTE #12
113/BLK-WHT	20	SEE NOTE #12
CAN-/GRN	20	SEE NOTE #12
CAN+/YEL	20	SEE NOTE #12

ITEM	DESCRIPTION
A	CONNECTOR(1), AMPSEAL, FEMALE, 23F, 770680-1. TERMINAL(23), FEMALE, AMPSEAL, 770854-1. UNUSED POSITIONS ARE SEALED INTERNALLY, AND DO NOT REQUIRE SEAL PLUG #770678-1.
B	CONNECTOR, BODY(1), DEUTSCH, DTM, 6M, #DTM04-6P. LOCK(1), #WM6P. TERMINALS, 6, MALE, 16-20GA, #1060-20-0122-PS.
C	BULGIN, IN-LINE FUSEHOLDER, #FX0185. LOADED WITH 2.0AMP FUSE: BUSSMANN #ABC-2-R, OR LITTELFUSE #0314 002.HXP.
D	WIRE TIE, PANDUIT, PLT1M-M OR EQUIVALENT.
E	CLIP SPLICE. SEE NOTE #6.

Ref.	Part No.	Serial Number	Description	Qty.
1	1075352	(00000000–11120705)	Harness, Ele [Telem, T500e]	1

WIRE HARNESS, MAIN, PUSH MODEL

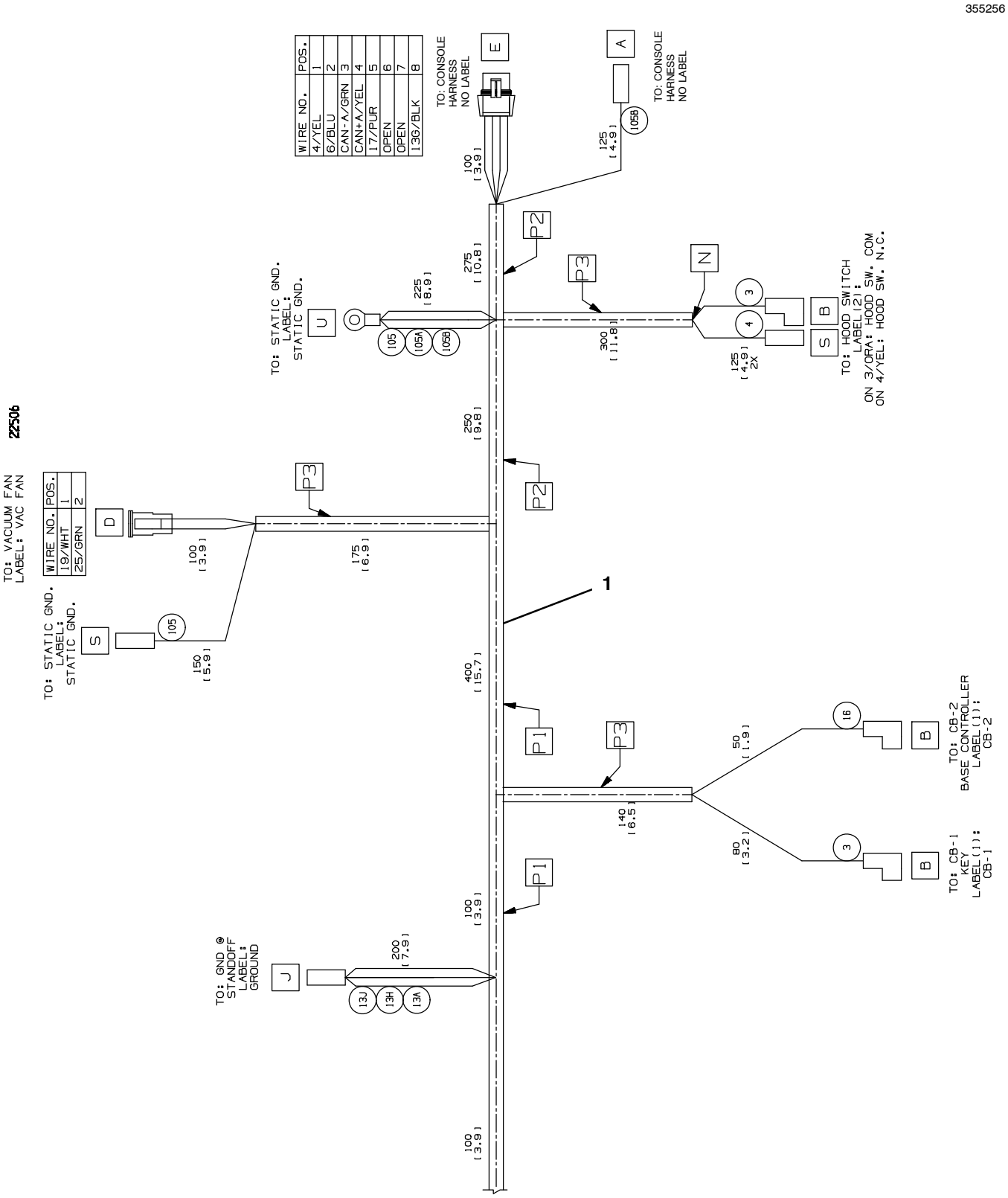

DETAIL A

WIRE HARNESS, MAIN, PUSH MODEL – CONT'D

355256

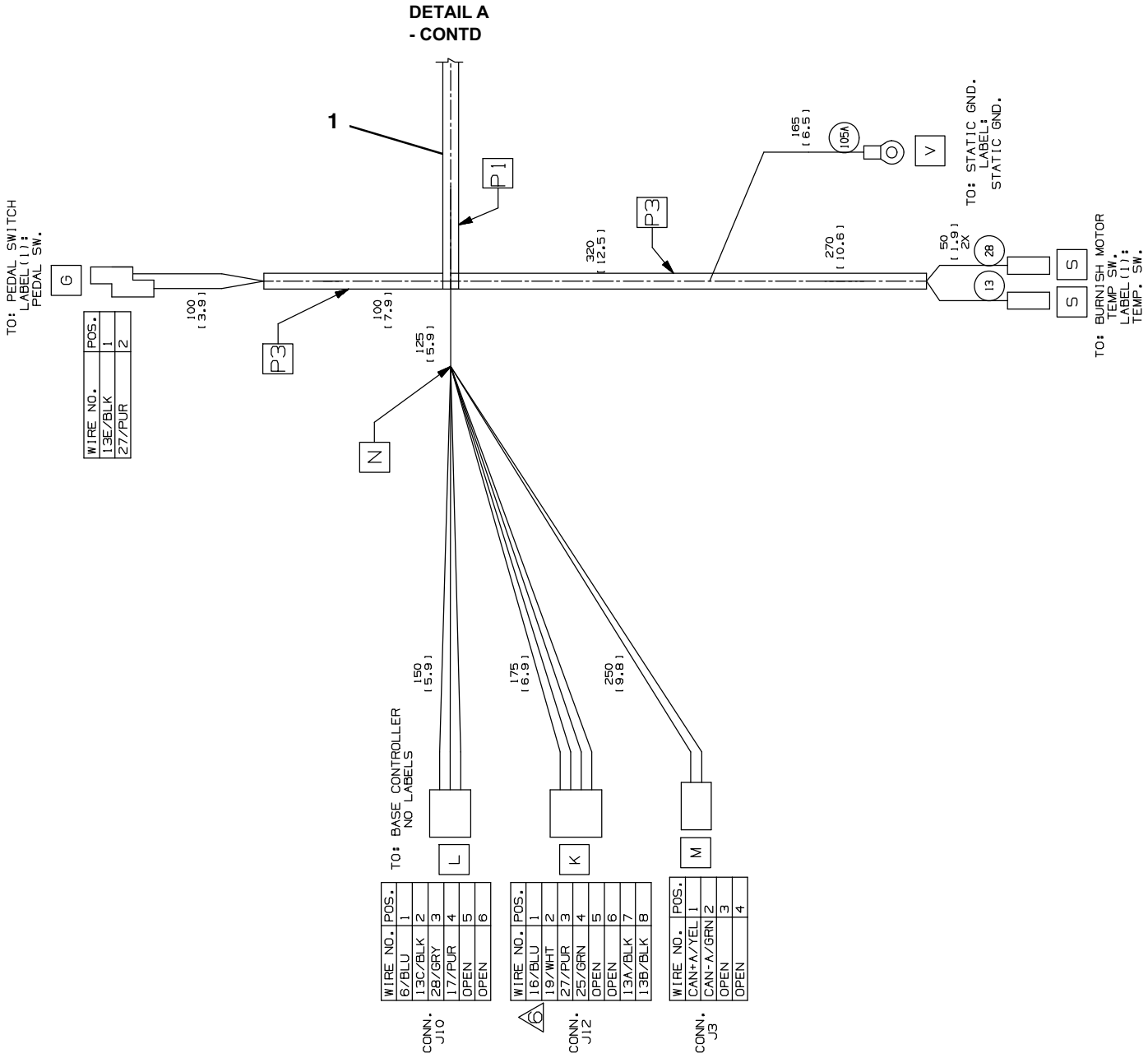

Ref.	Part No.	Serial Number	Description	Qty.
1	1072291	(00000000–)	Harness, Main, Ele [Volga, B5, Push]	1

WIRE HARNESS, MAIN, DRIVE MODEL

355256

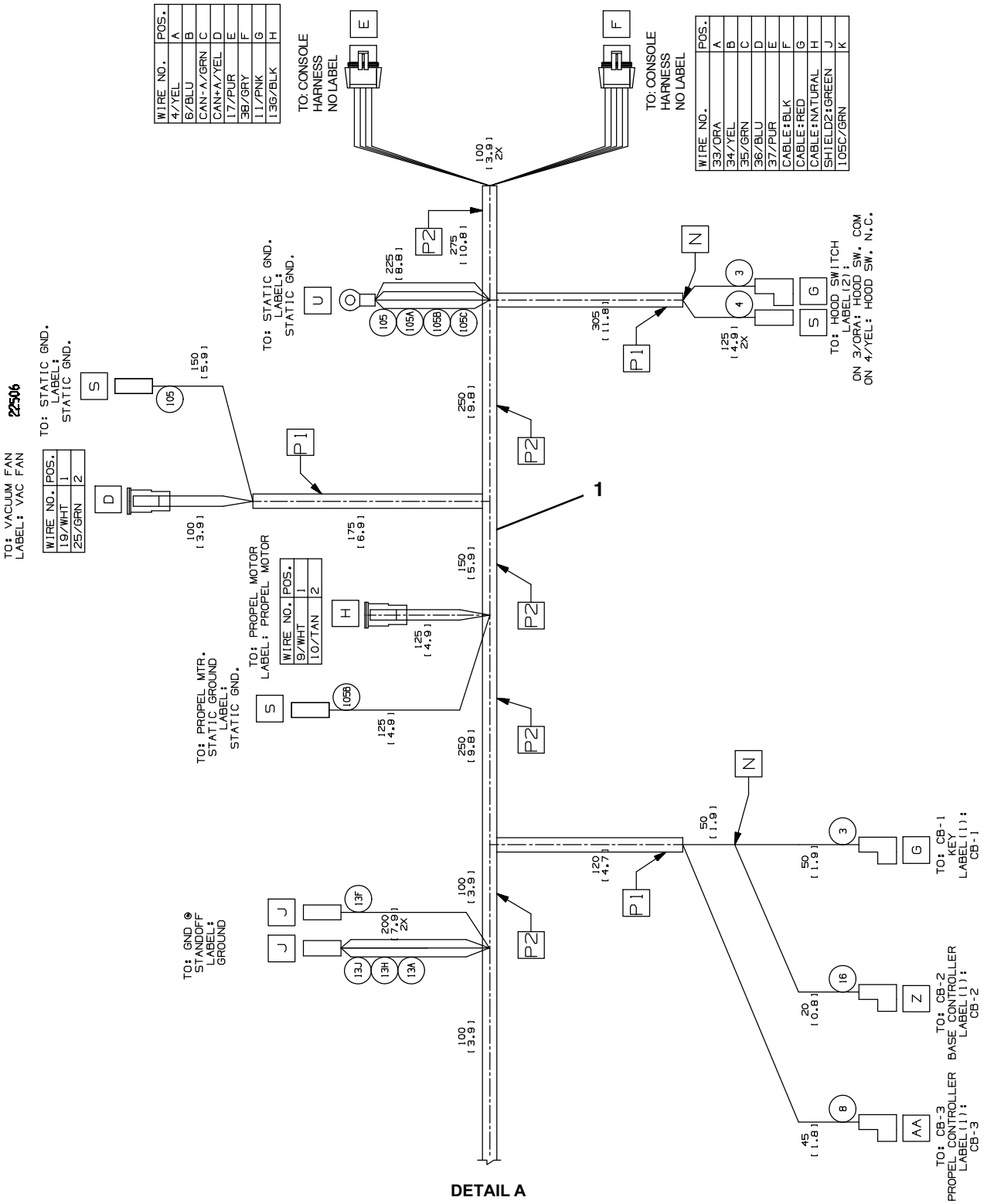

DETAIL A

WIRE HARNESS, MAIN, DRIVE MODEL – CONT'D

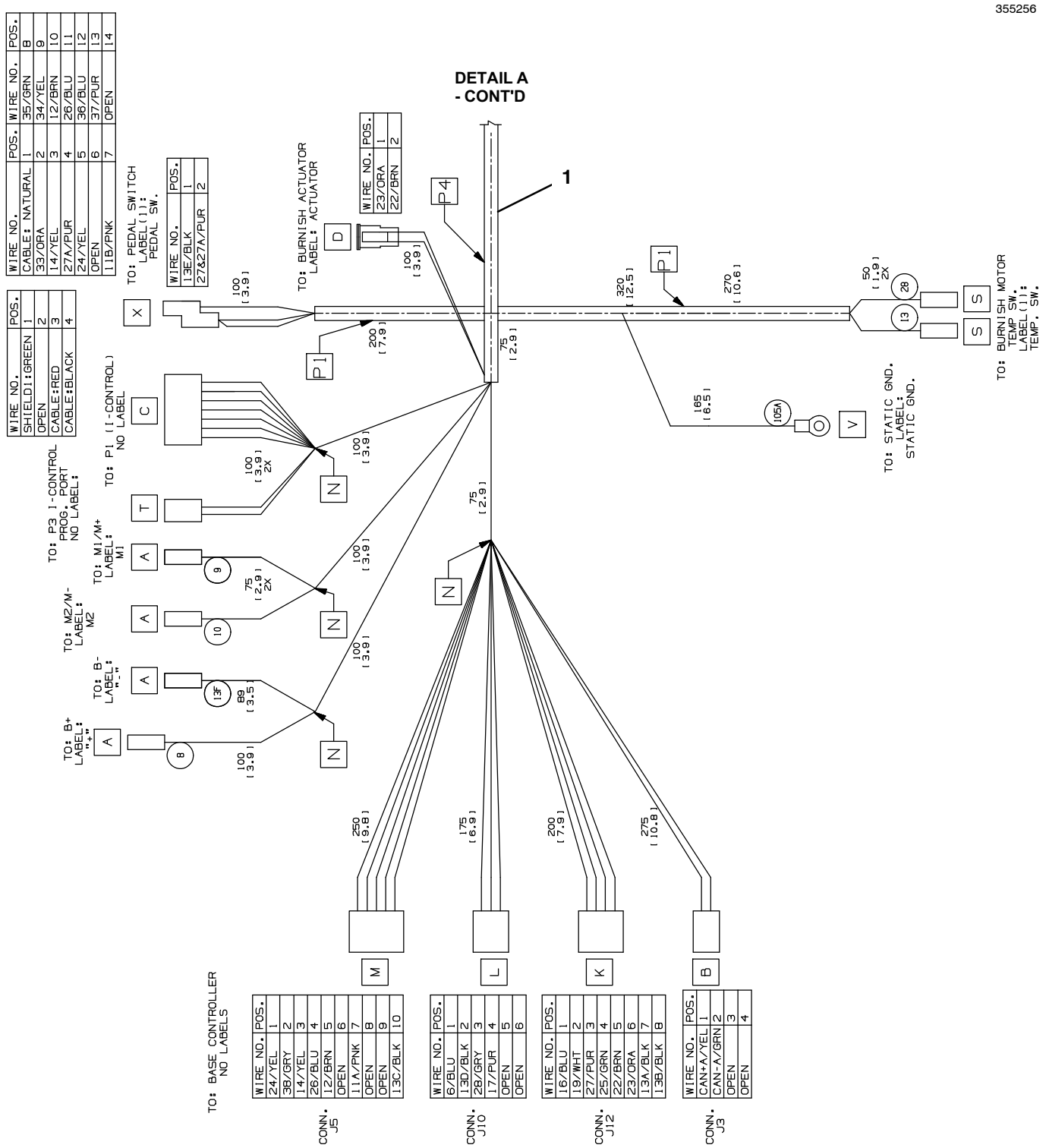

Ref.	Part No.	Serial Number	Description	Qty.
1	1072287	(00000000–)	Harness, Main, Ele [Volga, B5, Propel]	1

WIRE HARNESS, CONSOLE, PUSH MODEL

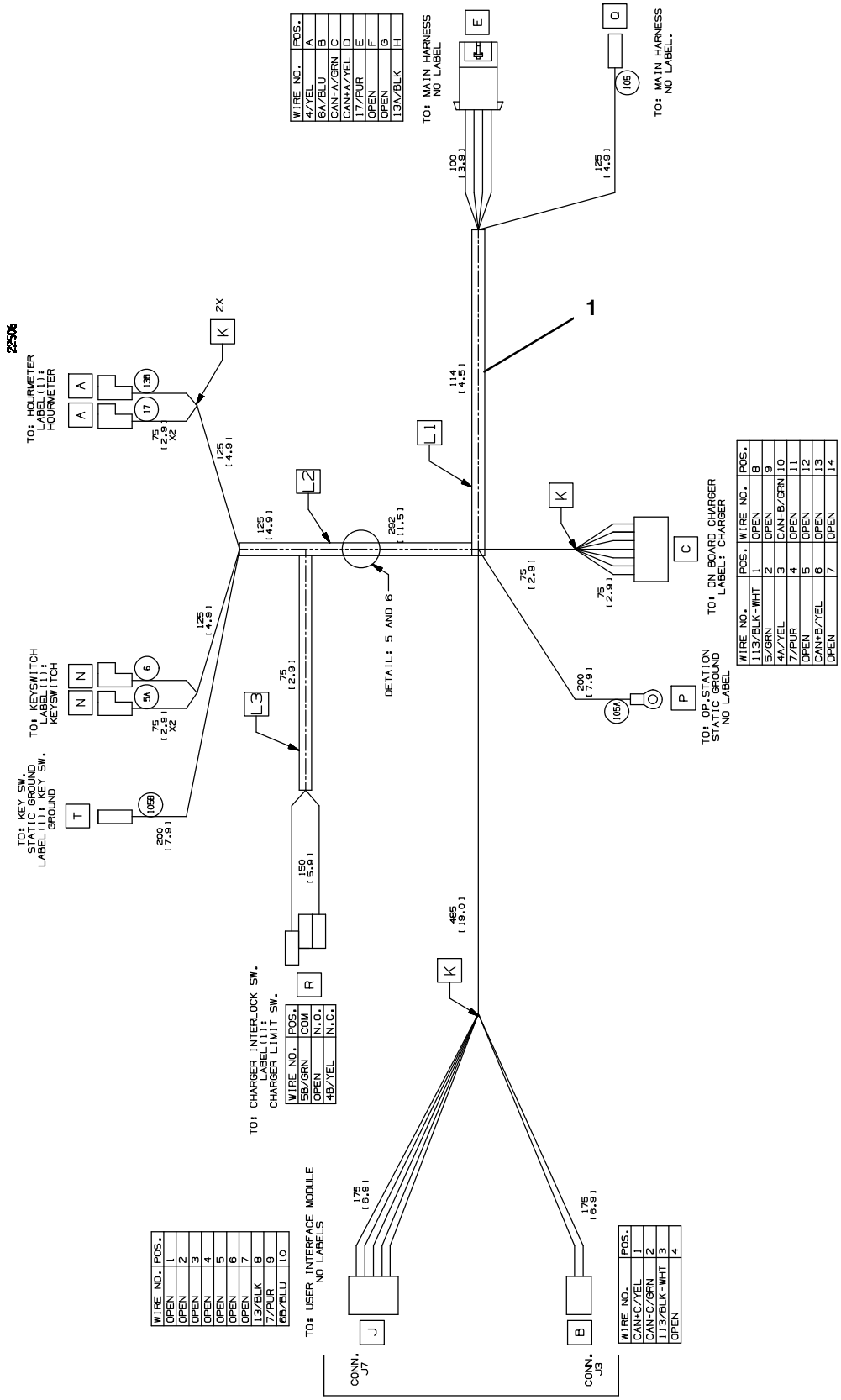

Ref.	Part No.	Serial Number	Description	Qty.
1	1072293	(00000000–)	Harness, Ele [B5/B7, Op.Station, Push]	1

WIRE HARNESS, CONSOLE, DRIVE MODEL

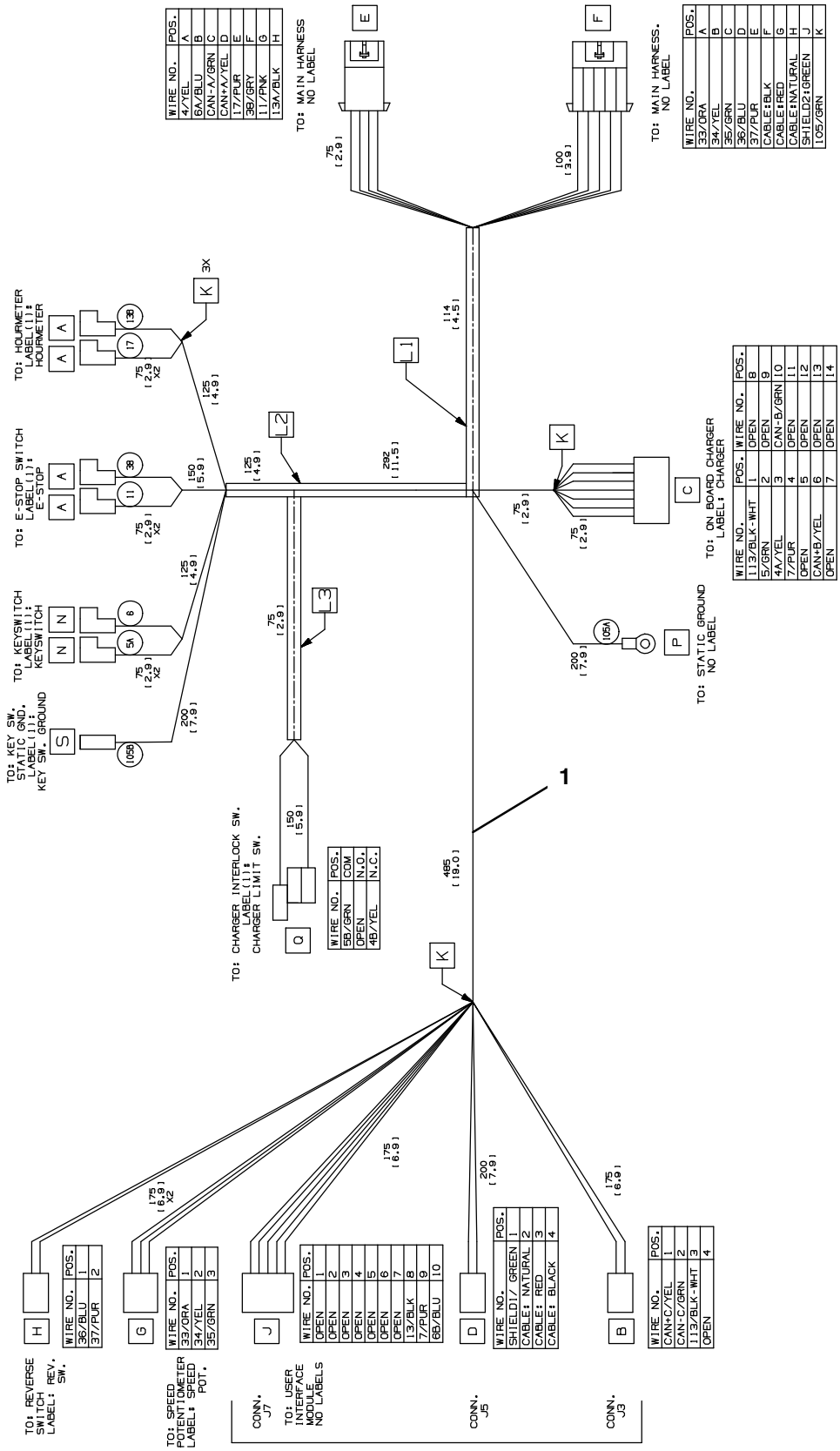

Ref.	Part No.	Serial Number	Description	Qty.
1	1072282	(00000000–)	Harness, Ele [B5/B7, Op.Sta., W/Propel]	1

WIRE HARNESS, BAIL SWITCH

355261

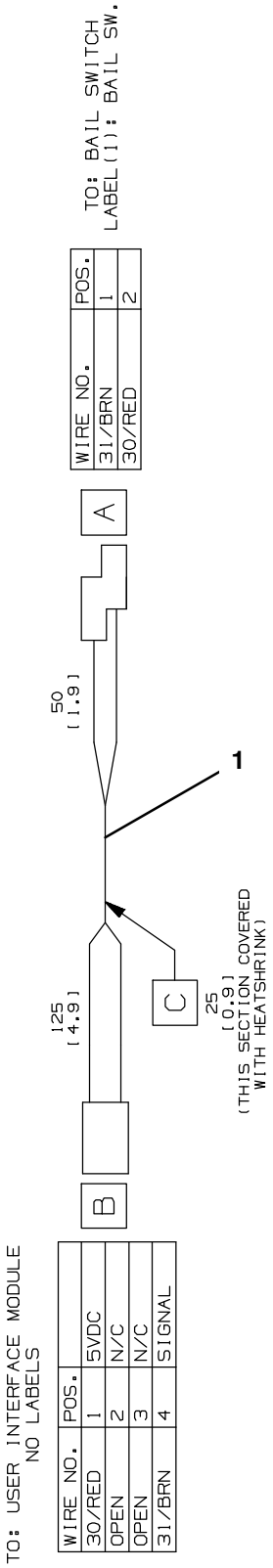

Ref.	Part No.	Serial Number	Description	Qty.
1	1072524	(00000000–)	Harness, Ele [Bail Switch]	1

WIRE HARNESS, KEY SWITCH

355262

COMPONENT ALPHA	COMPONENT DESCRIPTIONS
A	TERMINAL, RING, .750", INSULATED, 14-16GA, TYCO #322724.
B	TERMINAL, SNAP PLUG, .156", MALE, 14-16GA, INSULATED, MOLEX #19034-0009.

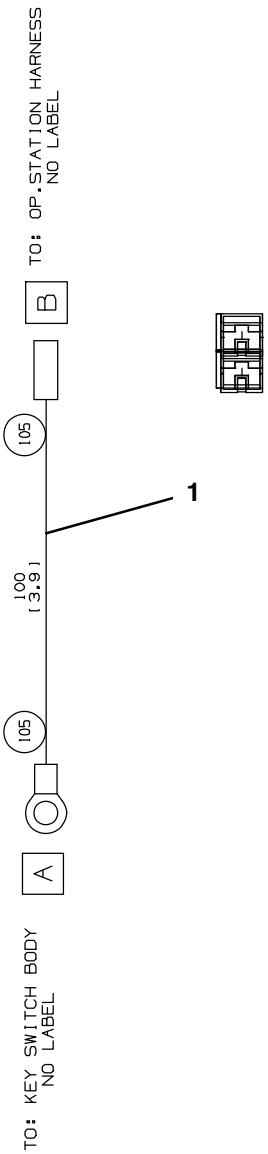

WIRE NO.	COLOR	GAUGE	TYPE
105	GRN	16	UL-GXL

Ref.	Part No.	Serial Number	Description	Qty.
1	1073037	(00000000–)	Harness, Ele [Key Sw.,Static Gnd]	1

WIRE HARNESS, BATTERY/CHARGER CABLE

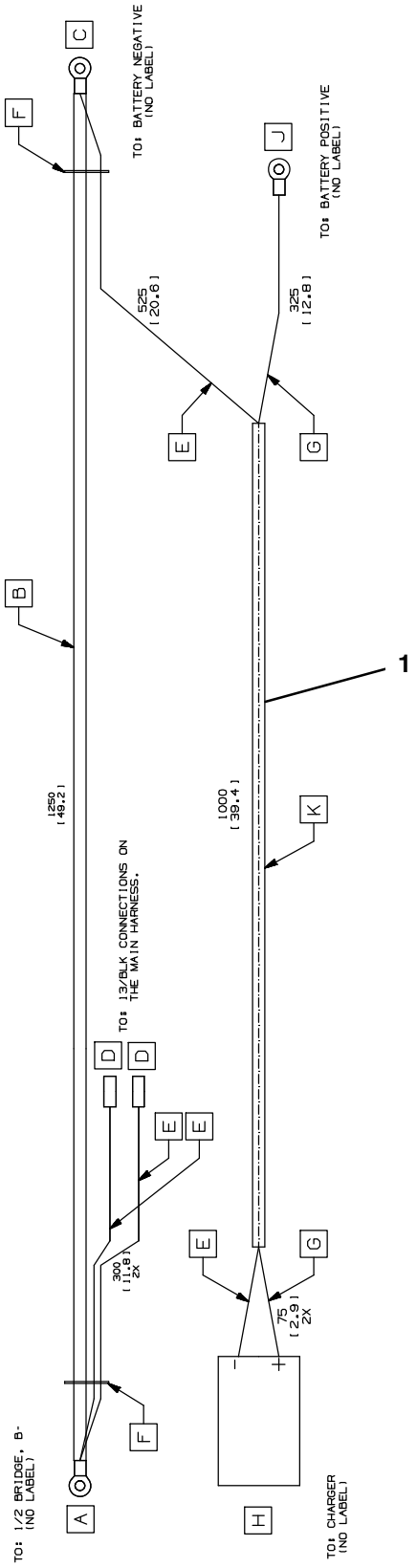

	Ref.	Part No.	Serial Number	Description	Qty.
∇	1	1072939	(00000000–)	Cable, Assy [B7/B5, Ground]	1
▲		130155	(00000000–)	Connector, Battery, 6ga 50a, Gray[2cont]	1