VHS010Nx C2D2

Instructions for use

INSTRUCTIONS MANUAL
MANUEL D'INSTRUCTIONS
MANUAL DE INSTRUCCIONES

C444 US-FR-ES
EDITION 11/2023

US English-American
FR French-Canadian
ES Spanish-Mexican

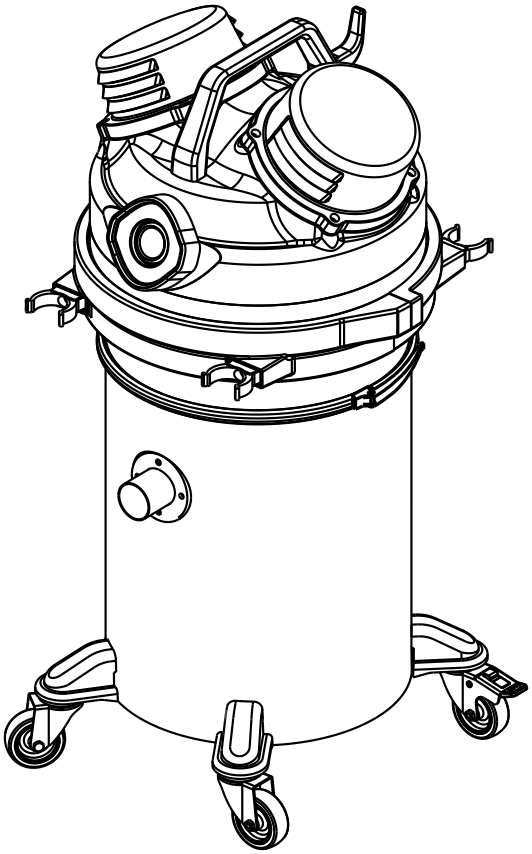

NILFISK

Original instructions

Table of contents

Instructions for use **2**
Operator's safety 2
Additional prescriptions for Hazloc machines 2
General information for using the machine 3
Proper uses 3
Improper Use 4
Testing and guarantee 4
How to request assistance 4
Exclusion of liability 4
Versions and variations 4
General recommendations 5
Residual Risks 5

Description of the machine **6**
Machine Parts and Labels 6
Optional kits 6
Accessories 6
Packing and unpacking 6
Unpacking, moving, use and storage 6
Setting to work - connection to the power supply 7
Extensions 7
Grounding instructions 7
Dry applications 8
Technical data 9
Dimensions 9
Controls and indicators 10
Inspections prior to starting 10
Starting and stopping 10
Emergency stopping 10
Operation 10

Maintenance, cleaning and decontamination **11**
Container and dust bag cleaning 11
Dust bag replacement 12
Primary and absolute filter replacement 12
Tightness inspection 13
Wiring diagrams 13

Recommended spare parts **14**

Troubleshooting **15**

Warranty **16**

US

Instructions for use

Read the operating instructions and comply with the important safety recommendations identified by the word CAUTION!

Operator's safety

CAUTION!

Before starting the machine, it is absolutely essential to read these operating instructions and to keep them handy for consultation.

The machine can only be used by people who are familiar with the way it works and who have been explicitly authorised and trained for the purpose.

Before using the machine, the operators must be informed, instructed and trained on how to work it and for which substances its usage is permitted including the safe method for removing and disposing of the vacuumed material.

CAUTION!

The use of the machine by people (including children) with limited physical and mental capacities or lacking in experience and knowledge is strictly forbidden, unless they are supervised by a person who is experienced in the use and safe handling of the machine.

Children must be supervised to make sure they will not play with the machine.

CAUTION!

Before using the machine, always check that any hazardous condition has been eliminated and inform the people in charge about any operational fault.

Check that all guards and protections are correctly mounted and that all safety devices are installed and efficient.

Repairs must only be carried out when the machine is at a standstill and disconnected from the electricity and air supply mains. Never ever carry out repairs without having first received the necessary authorization.

CAUTION!

Any changes made by the user without the Manufacturer's explicit authorization shall invalidate the warranty and hold the Manufacturer harmless from any and all liabilities for damages caused by faulty products.

US

Additional prescriptions for Hazloc machines

This machines are suitable to vacuum combustible dust, with the exception of magnesium dust.

CAUTION!

This appliance is not suitable for direct connection to a dust generating machine.

CAUTION!

Vacuuming combustible dust presents a risk of fire and explosion. May only be used by trained personnel.

These vacuum cleaners are certified by an NRTL to operate in a ClassII Div2 area where dusts belonging to Group F, G are present. These are marked as follows:

ClassII Div2 is an hazardous area where one of the following conditions exists:

- Combustible dust due to abnormal operations may be present in the air in quantities sufficient to produce explosive or ignitable mixtures; or
- Combustible dust accumulations are present but are normally insufficient to interfere with the normal operation of electrical equipment or other apparatus, but could as a result of infrequent malfunctioning of handling or processing equipment become suspended in the air, or
- Combustible dust accumulation on, in or in the vicinity of the electrical equipment could be sufficient to interfere with the safe dissipation of heat from electrical equipment or could be ignitable by abnormal operation or failure of electrical equipment.

Group F:

Atmospheres containing combustible carbonaceous dusts with 8% or more trapped volatiles such as carbon black, coal, or coke dust.

Group G:

Atmospheres containing combustible dusts not included in Group E or Group F, including flour, grain, wood, plastic, and chemicals.

T4A:

Maximum surface temperature measured on the vacuum cleaner at the maximum ambient temperature is 120°C.

They are not designed to collect explosives or chemically unstable substances. They are not designed to vacuum fluids with a low flash point (Flash Point lower than 55°C), nor for incendiary substances (T < 200 °C).

The user must be informed about the dangers related to electric current and static electricity, and the risks deriving from the physical and chemical properties of the substances in the work area.

Prior to using:

Static electricity can cause sparks, with the consequent risk of explosion! Therefore, make sure the electrical socket and plug (the ground cable supplied, on compressed air models) are correctly grounded.

Using an ohmmeter, check the electrical continuity:

1. Between the inlet and end of the vacuuming accessories: the resistance detected must be less than 100MΩ (10^8Ω)
2. Between the container (if it is not installed, use the outlet for discharging the collected material) and the grounding pin (if the vacuum cleaner is equipped with a plug), or the grounding wire of the supply cable (or the grounding cable in case of compressed air models).
   In this case the measured resistance must be:
   - less than 10 Ω if the components are made of stainless steel (the possible connection points of the electrodes are handles, inlets and wheel supports)
   - Less than 10^6 Ω in case of plastic container, Safe Pack type, (the connection point of the electrodes is on the inlet)

Check the continuity of the ground and equipotential cables (green-yellow protective conductors) and make sure that they are in perfect conditions.

Check for loose electrical or mechanical connections.

During operation:

When replacing the filter, only install original Nilfisk antistatic filters.

Do not use insulating couplings or dust collection hoses.

Do not remove hoses during operation, always wait until the machine has stopped.

Do not use plastic bags for the container. Only Nilfisk original antistatic plastic bags are allowed.

If a pre-separator must be used, check that it is well grounded.

Only use antistatic hoses, both for vacuuming and connecting the pre-separator. Do not use the machine to collect large objects or particles because their collision may cause sparks.

Do not rub or hit the floor with steel tools, as they can produce sparks under friction. Only use collectors and suction caps that can be replaced with original Nilfisk antistatic spare parts to clean the floor.

Check the vacuum indicator periodically. This indication is related to the filter clogging level, therefore to the flow speed in hoses. Too slow a speed can cause dangerous stagnation of material in the hose itself.

Bring the vacuum cleaner out of the Hazloc classified area, then release the container and empty it, especially after vacuuming wet vegetable particles or fluids, to prevent the accumulation of fermentation gases.

Only replace accessories supplied by the manufacturer with original spare parts.

⚠ CAUTION! ⚠

Any accumulation of dust on the machine could represent a potential source of ignition. Clean the surface of the machine regularly.

Specific maintenance and other precautions

Always perform the service operations and checks described in the standard instruction manual of the machine being used. Check regularly, and in particular while emptying the dust container, that the filters are in good condition (included the safety metallic filter, if equipped), so as to prevent breakage, wear, damages and/or tearing of the filter cloth, which may result in dust dispersion and exhaust emission. This may generate dangerous clouds. Check that the filter is intact before using the machine as follows: vacuum fine inert dust (e.g.: talc, chalk, scagliola…) and make sure it is not blown out of the outlet.

Periodically clean the motor cooling fan to prevent the motor from overheating.

Use antistatic suction hoses suitable for the type of material to vacuum. The hoses should not produce sparks or create electrostatic charges caused by the tube rubbing.

Only use original Nilfisk antistatic hoses and accessories.

The antistatic hoses must be grounded to prevent electrostatic charges. Using an ohmmeter, check for the correct galvanic connection (electrical continuity) between the hoses and the accessories being used. This is to prevent the operator being exposed to fire hazards and the risk of electric shocks.

⚠ CAUTION! ⚠

Do not rub non-metal parts with clothes, rags, or fabrics of any kinds (cotton, wool, synthetic, paper, etc.) that can generate dangerous electrostatic charges.

For cleaning non metal parts, use wet clothes or rags in order to reduce the electrostatic charges.

In any case, cleaning procedures must be performed outside the area that has been classified as dangerous for risk of explosion.

General information for using the machine

Use the machine in accordance with the laws in force in the country where it is used.

Besides the operating instructions and the laws in force in the country where the device is used, the technical regulations for ensuring safe and correct operation must also be observed

Do not perform any operation that could jeopardize the safety of people, property and the environment.

Comply with the safety indications and prescriptions in this instruction manual.

Proper uses

This machine is suitable for commercial use, in hotels, schools, hospitals, factories, shops, offices and apartment hotels for example, for hire and in any case for purposes other than normal domestic use.

This machine is suitable for cleaning and vacuuming solid materials in indoor and outdoor environments.

The machine has been designed to be used by one operator at a time.

This machine consists of a vacuum unit, with an upstream filter unit and a container for collecting the vacuumed material.

Improper Use

⚠ CAUTION! ⚠

The following use of the device is strictly forbidden:

- ***Outdoors in case of atmospheric precipitation.***
- ***When not placed on horizontal level ground.***
- ***When the filter unit is not installed.***
- ***When the vacuum inlet and/or hose are turned to face parts of the human body.***
- ***Use without the cover on the vacuum unit.***
- ***When the dust container is not installed.***
- ***Use without the guards, protective covers and safety systems installed by the manufacturer.***
- ***When the cooling vents are partially or totally clogged.***
- ***When the machine is covered with plastic or fabric sheets.***
- ***Use with the air outlet partially or totally closed.***
- ***When used in narrow areas where there is no fresh air.***
- ***When the cable or plug is damaged. If appliance is not working as it should, has been dropped, damaged, left outdoors or dropped into water, return it to an authorized service center.***
- ***Vacuuming liquids with machine not equipped with specific original stopping systems.***
- ***Do not pull or carry by the cord, use the power cord as a handle, do not close a door on cord, or pull cord around sharp edges or corners. Do not run the appliance over the cord. Keep cord away from heated surfaces.***
- ***Vacuuming the following materials:***
  1. ***Burning materials (embers, hot ashes, lit cigarettes, etc.).***
  2. ***Naked flames.***
  3. ***Combustible gas.***
  4. ***Flammable liquids, aggressive fuels (gasoline, solvents, acids, alkaline solutions, etc.).***
  5. ***Explosive dust/substances and/or ones liable to ignite in a spontaneous way (such as magnesium or aluminium dusts, etc.).***

Note: Fraudulent use is not admitted.

US

Testing and guarantee

- Testing
  Each machine is subjected to a final test involving its operation and performances. This guarantees maximum efficiency during the work the machine must carry out.
- Warranty
  The guarantee clauses are specified in the sales contract.

How to request assistance

In the event of faults or malfunctions requiring the intervention of specialized technicians, contact the Manufacturer or your nearest After-Sales Service Centre.

Exclusion of liability

The machine was delivered to the user according to the conditions valid at the time of purchase.

For no reason what so ever shall the user be authorized to tamper with the machine.

Contact your nearest After-Sales Service Centre in the event of faults.

All attempts by the user or by unauthorized personnel to demount, modify or, more generally, tamper with any part of the machine shall void the guarantee and relieve the manufacturer of all responsibility for damage to either persons or property caused by such action.

The manufacturer shall also be relieved of liability in the following cases:

- Wrong installation.
- Improper use of the machine by inadequately trained personnel.
- Utilization contrary to the provisions in force in the country of use.
- Incorrect or insufficient maintenance.
- Use of non-genuine spares or use of spares that are not specifically made for the model in question.
- Total or partial failure to comply with the instructions.
- Failure to forward the warranty certificate.
- Exceptional environmental events

Versions and variations

Versions for dusts that are harmful to health (L-M-H)

Appliances for dusts that are harmful to health are classified, in accordance with Standard UL/CSA 60335-2-69 - Anx. AA, according to different dust classes:

- **L** (low risk) suitable for separating dust with an exposure limit value of over 1 mg/m3, depending on the volume occupied; retains at least 99% of vacuumed particles;
- **M** (medium risk) suitable for separating dust with an exposure limit value not lower than 0.1 mg/m3; retains at least 99.9% of vacuumed particles;
- **H** (high risk) for separating all dust with an exposure limit value lower than 0.1 mg/m3, depending on the volume occupied, including carcinogenic and pathogenic dusts, such as asbestos; retains at least 99.995% of the vacuumed particles.

[NOTE]

- *In the case of dust harmful to health, contact the local health and safety authorities, and observe national regulations in force both during use and disposal.*
- *Radioactive substances are not included in the definition of the type of dust harmful to health described above.*

[NOTE]

Machines designed for picking up sawdust and quartz-containing mineral dust shall be at least M-class.

HEPA versions (AU)

This machine can be fitted with a filter (HEPA). The procedures for servicing and emptying the machine including removing the dust container, must only be performed by authorized personnel wearing protective clothing. Do not use without the complete filter system in place.

General recommendations

CAUTION!

If an emergency situation occurs:

- ***for example, accident - fault - filter breakage - fire - etc.***

Disconnect the machine from the power supply and ask for assistance from qualified personnel.

In case the user comes into contact with the vacuumed product, check the cautions shown on the safety technical sheet of the product, which must be made available from the employer.

[NOTE]

Check the place of work and substances tolerated for the machine suitable for liquids.

CAUTION!

The machines must not be used or stored outdoors, or in damp places.

[NOTE]

These devices must not be used in corrosive environment.

Residual Risks

After carefully considering the risks that are present in all machine operating phases, necessary measures were adopted in order to eliminate the risks for the operators, as far as possible, and/or limit or reduce the risks deriving from hazards that cannot be completely eliminated at the source.

During operations and/or maintenance, operators are exposed to certain residual risks which, due to the nature of the operations themselves, cannot be completely eliminated. Therefore the installer is responsible for providing additional information and/or hazard signals based on the location of machine installation and the material that is handled.

Risks due to electrical hazards during maintenance

DANGER

Risk of electrocution if accessing the electrical equipment during maintenance without having deactivated the electrical power supply.

FORBIDDEN

It is forbidden to work on the electric equipment before disconnecting the machine or its parts from the electrical line.

MANDATORY

Have the electrical maintenance operations performed by qualified personnel. Perform the checks on the electric equipment as specified in the manual.

Risks to the presence of residual high temperature after stopping the vacuum unit.

During maintenance and cleaning operations, the operator may come into contact while the machine is stopped, with parts of the vacuum unit with surfaces at high temperatures. Specific warning signs placed in strategic points indicate the hazard due to the presence of hot surfaces and the obligation for the user to wear personal protective equipment, in particular protective gloves.

The potentially hot parts (high temperatures) are identified as follows:

US

Description of the machine

Machine Parts and Labels

Figure 1

1. Identification plate:
   Model code, serial number, year of manufacture, weight
2. Dust container
3. Vacuum inlet
4. Castor brake lever
5. Handle
6. Closing band lever
7. Air outlet
8. Accessories holder
9. Vacuum Gauge
10. Main Switch

This machine creates a strong air flow which is drawn in through the vacuum inlet and blows out through the outlet.

Before turning on the machine, fit the vacuum hose into the inlet and then fit the required tool on to the end part (refer to the manufacturer's accessory catalogue or Service Centre).

The diameters of the authorized hoses are indicated in the Technical data table.

The machine is equipped with a primary filter which enables it to be used for the majority of applications.

Figure 2

Vacuum cleaners for dust harmful to health dust are classified according to different dust classification, in compliance with standard IEC 60335-2-69 – Annex AA:

1. Class **L** label
2. Class **M** label
3. Class **H** label

The class H label reads the following.

US

⚠ CAUTION! ⚠

This vacuum cleaner contains dust hazardous for the health.

Only authorised personnel wearing suitable personal protective equipment should empty and service the machine, including removing the means used to vacuum the dust. Do not use without the complete filter system in place.

Appliances intended for use in Hazloc atmospheres:

4. HAZLOC label

Optional kits

Various optional kits are available for converting the machine.

On request, the machine can be supplied with optional kits already installed. However, they can also be installed at a later date.

Please contact the sales network for further details.

Instructions describing how to fit the optional kits and the relative operation and maintenance manuals are supplied together with the optional kits.

⚠ CAUTION! ⚠

Use only supplied and authorised genuine spare parts.

Accessories

Various accessories are available; refer to the manufacturer's accessory catalogue.

⚠ CAUTION! ⚠

Use only genuine accessories supplied and authorised by the manufacturer.

Packing and unpacking

All the dispatched equipment has been thoroughly checked before being delivered to the haulage contractor.

On arrival, check the machine to see that it has not been damaged during transport. In case of damage, immediately lodge a complaint with the haulage contractor.

Dispose of the packing materials in compliance with the laws in force.

Figure 3

Model	A (in)	B (in)	C (in)	lbs (*)
VHS010N1 C2D2	21.5	21.5	47	66

(*) Weight with packing

Unpacking, moving, use and storage

To unpack the vacuum unit, remove the retainers with a hammer and a screwdriver.

Also remove the fastening devices placed by the manufacturer when packing, by using suitable tools.

Release the wheel brakes and remove the machine from the supporting platform.

Operate on flat, horizontal surfaces.

The load-bearing capacity of the surface the machine is placed on must be suitable for bearing its weight.

If the device is to work in a fixed position, allow wide space around the device in order to ensure freedom of the movement and allow the maintenance staff to operate with ease.

⚠ CAUTION! ⚠

The manufacturer shall not be liable for any damages caused to the machine during lifting, when the lifting equipment supplied by the manufacturer is not used.

⚠ CAUTION! ⚠

When several supporting platforms are provided, the supporting platform to which the machine is anchored must be handled with a forklift truck that can provide adequate capacity. Then unpack the machine by laying it down on a flat and horizontal surface that can provide adequate capacity for the vacuum cleaner weight.

Setting to work - connection to the power supply

⚠ CAUTION! ⚠

- ***Make sure there is no evident sign of damage to the machine before starting work.***
- ***Before plugging the machine into the electrical mains, make sure the voltage rating indicated on the data plate corresponds to that of the electrical mains.***
- ***Connect the plug into a socket with a correctly installed ground contact/connection. Make sure that the machine is turned off.***
- ***The plugs and connectors of the connection cables must be protected against splashes of water.***
- ***Check that for proper connection to the electrical mains.***
- ***Use the machine only when the cables that connect to the electricity mains are in perfect condition (damaged cables could lead to electric shocks!).***
- ***Regularly check there are no signs of damage, excessive wear, cracks or ageing on the electric cable.***

⚠ CAUTION! ⚠

- ***When the device is operating avoid stepping on, crushing, pulling or damaging the cable that connects to the electrical mains.***
- ***When the device is operating avoid disconnecting the cable from the mains only by pulling the plug (do not pull on the cable itself).***
- ***Only replace the electric power cable with one of the same type as the original, the same rule applies if an extension is used.***
- ***The cable must be replaced by the manufacturer's Service Centre staff or by equivalent qualified personnel.***

The system safety officers must:

- Prevent any improper use or manoeuvre.
- Make sure that the safety devices are not removed or tampered with.
- Check that all maintenance operations are regularly performed;
- Make sure that no machine part (couplings, holes, etc.) is modified to attach additional devices;
- Make sure that only original Nilfisk spare parts are used.

[NOTE]

The user shall be responsible for ensuring that installation complies with the all relevant local provisions. The equipment must be installed by qualified technicians who have read and understood the instructions herein.

Extensions

If an extension cable is used, make sure it is suitable for the power input and protection degree of the vacuum cleaner and for hazardous classified area.

⚠ CAUTION! ⚠

The machine power socket must be protected by a differential circuit-breaker with surge current limitation, that shuts off the power supply when the current discharged to the ground exceeds 30 mA for 30 msec. or an equivalent protection circuit.

⚠ CAUTION! ⚠

Never spray water on the machine: this could be dangerous for people and could short circuit the power supply.

Grounding instructions

This appliance must be grounded. If it should malfunction or breakdown, grounding provides a path of least resistance for electric current to reduce the risk of electric shock.

This appliance is equipped with a cord that has an equipment-grounding conductor and grounding plug. The plug must be inserted into an appropriate outlet that is properly installed and grounded in accordance with all local codes and ordinances.

⚠ CAUTION! ⚠

Improper connection of the equipmentgrounding conductor can result in a risk of electric shock. Check with a qualified electrician or service person if you are in the doubt as to whether the outlet is properly grounded. Do not modify the plug provided with the applianceif it will not fit the outlet, have a proper outlet installed by a qualified electrician.

US

Dry applications

[NOTE]

The supplied filters and the bag must be installed correctly.

⚠ CAUTION! ⚠

Comply with the safety regulations governing the vacuumed materials.

US

Technical data

Parameter	Units of measurement	VHS010N1 C2D2
Voltage (@60Hz)	**V**	120
Power rating	**kW**	0.95
Current	**A**	13.6
Max vacuum	**inH2O**	85
Maximum air flow rate (118 Ø 1.5 in hose)	**cfm**	100
Sound pressure level (Lpf)	**dB(A)**	72
Vibration, ah	**m/s²**	≤2.5
Protection	**IP**	65
Insulation	**Class**	I
Bag capacity	**gal**	4
Vacuum inlet (diameter)	**in**	1.5
Allowed hoses	**in**	1.5
Primary filter surface (L-M-H)	**Sq. ft**	10

Dimensions

Figure 4

Model	VHS010N1 C2D2
A (in)	17
B (in)	16
C (in)	33
Weight (lbs)	46

[NOTE]

- *Storage conditions:*
  Temperature: -10°C ÷ +40°C
  Humidity: ≤ 85%
- *Operating conditions:*
  Maximum altitude: 800 m
  (Up to 2,000 m with reduced performances)
  Temperature: - 10°C ÷ +40°C
  Humidity: ≤ 85%

US

Controls and indicators

Figure 5

1. **Vacuum gauge**
2. **Manual motor starter**

Inspections prior to starting

Before starting, check that:

- The filters are installed.
- The closing band is properly tightened.
- The vacuum hose and tools have been correctly fitted into the vacuum inlet.
- The bag and safety container is installed.

CAUTION!

Do not use the device if the filters are faulty.

Starting and stopping

CAUTION!

Lock the castor brakes before starting the vacuum cleaner.

Figure 5

- Turn the vacuum unit start/stop switch (2) to position “I” to start the vacuum cleaner. Turn the vacuum unit start/stop switch (2) to the “O” position to turn off the vacuum cleaner.

Emergency stopping

Turn the switch to “0” to turn off the machine.

CAUTION!

The machine’s motors and internal devices remain electrically powered.

Operation

Figure 6

Vacuum gauge (2): green zone (3), red zone (1)

When using the machine, check the flow control:

- when the machine is operating, the pointer of the vacuum gauge must remain in the green zone (3) to ensure that the speed of the intake air does not drop below the safety value of 20 m/sec;
- If the pointer is in the red zone (1) it means that the speed of the air in the vacuum hose is less than 20 m/s, and that the machine is not operating in optimal conditions. Shake or replace the filter.
- during normal operation conditions, close the vacuum hose, the pointer of the vacuum gauge must switch from the green zone (3) to the red zone (1).

CAUTION!

The air speed in the vacuum hose must not be less than 20 m/s.

Condition indicated by the vacuum gauge pointer in the green zone (3).

CAUTION!

All machines can be used only with hoses whose diameters comply with the specifications in the “Technical Data” table.

CAUTION!

Consult the “Troubleshooting” chapter if faults occur.

At the end of a cleaning session

- Turn off the machine and remove the plug from the socket.
- Wind up the connection cable.
- Store the machine in a dry place, out of reach of unauthorised people.
- Lock the castor brakes.
- During transport and when not using the machine, close the vacuum inlet with the relevant plug (if equipped).

US

Maintenance, cleaning and decontamination

⚠ CAUTION! ⚠

Disconnect the machine from its power source before cleaning, servicing, replacing parts or converting it to obtain another version/variant.

- ***Carry out only the maintenance operations described in this manual.***
- ***Use only original spare parts.***
- ***Do not modify the machine in any way.***

Failure to comply with these instructions could jeopardize your safety.

⚠ CAUTION! ⚠

For maintenance procedures not described in this manual, please contact the manufacturer's technical support or sales network.

⚠ CAUTION! ⚠

To guarantee the safety level of the machine, only original spare parts supplied by the manufacturer should be used.

⚠ CAUTION! ⚠

The precautions described below must be taken during all maintenance operations, including cleaning and replacing the primary and absolute filters.

⚠ CAUTION! ⚠

This Class H machine can collect dust hazardous for the health. The procedures for servicing and emptying the machine including removing the dust bag, must only be performed by specialised personnel wearing protective clothing. Do not use without the complete filter system in place.

⚠ CAUTION! ⚠

In particular, on Class H machines, the filtering efficiency of the machine must be checked at least once a year, or more often if required by national legislation. The test method for checking the filtering efficiency of the machine is indicated in standard EN 60335-2-69, para. 22.AA.201.2.

If the test isn't passed, it must be repeated after the class H filter has been changed.

- To allow the user to carry out the maintenance operations, the machine must be disassembled, cleaned and overhauled as far as is reasonably possible, without causing hazards for the maintenance staff or other people. The suitable precautions include decontamination before disassembling the machine, adequate filtered ventilation of the exhaust air from the room in which it is disassembled, cleaning of the maintenance area, and suitable personal protection.
- The external parts of the machine must be decontaminated by cleaning and vacuuming methods, dedusted or treated with sealant before being taken out of a hazardous zone.
- All parts of the machine must be considered as contaminated when they are removed from the hazardous zone and appropriate actions must be taken to prevent dust from dispersing.
- When maintenance or repair procedure are carried out, all the contaminated elements that cannot be properly cleaned, must be eliminated. These elements must be disposed of in sealed bags in accordance with applicable regulations and local laws on the disposal of such material. This procedure must also be followed for filter disposal (primary and absolute filters).
- Compartments that are not dust-tight must be opened with suitable tools (screwdrivers, wrenches, etc.) and thoroughly cleaned.
- A check must be carried out by the manufacturer or the personnel of the same at least once a year. For example: Check the air filters to find out whether the air-tightness of the machine has been impaired in any way and make sure that the electric control panel operates correctly.

Container and dust bag cleaning

Paper Bag and Safe Bag for dust collection

Figure 7

The machine can be equipped with dust collection bag.

In this case, the machine must be equipped with a specific container and a cap on the side.

If the bag is not properly installed, it could create health risks for people exposed.

[NOTE]

The safe bag system is suitable to collect toxic dust to ensure that the user does not come into contact with the product.

US

Dust bag replacement

CAUTION!

- ***Before proceeding with these operations, turn off the machine and remove the plug from the power socket.***
- ***These operations can only be carried out by trained and qualified personnel who must wear adequate clothing, in compliance with the laws in force.***
- ***In case of hazardous and/or harmful dust, use only the bags recommended by the manufacturer (see "Recommended spare parts").***
- ***The bag must only be disposed of by qualified personnel and in compliance with the laws in force.***
- ***Use only original Nilfisk bags.***
- ***Only use bags suitable for the machine class you are using.***

CAUTION!

Take care not to raise dust during this operation. Wear a P3 mask and other protective clothing plus protective gloves (PPE) suited to the hazardous nature of the dust collected, refer to the laws in force.

How to replace the Paper Bag

Figure 7

- Close the inlet by using the relevant cap (if equipped).
- Release the dust container.
- Remove the bag and close it with the relevant cap (1) as shown in the figure.
- Insert a new bag, making sure the bag inlet is sealed.
- Set the dust container into the machine again.

How to replace the Safe Bag

Figure 7

- Remove and put the vacuum hose in a safe and dust-free place.
- Close the inlet by using the relevant cap (if equipped).
- Release the dust container.
- Close the Safe Bag by pulling the "guillotine" seal (2).
- Close the plastic bag hermetically using the relevant band (3).
- Use the sticky tape (4) to close the bottom of the plastic bag.
- Remove the relevant connection (5) of the bag from the vacuum inlet.
- Insert a new safe bag, making sure the vacuum inlet is well connected to the bag attachment, to grant the sealing.
- Wrap the plastic bag around the dust container external wall.
- Place the dust container in the vacuum cleaner.

US

Primary and absolute filter replacement

CAUTION!

When the machine is used to vacuum hazardous substances, the filters become contaminated, therefore:

- ***Work with care and avoid spilling the vacuumed dust and/or material;***
- ***place the disassembled and/or replaced filter in a sealed plastic bag;***
- ***close the bag hermetically;***
- ***dispose of the filter in accordance with the laws in force.***

CAUTION!

Filter replacement is a serious matter. The filter must be replaced with one of identical characteristics, filtering surface and category.

Otherwise the machine will not operate correctly.

Before proceeding with these operations, turn off the machine and remove the plug from the power socket.

CAUTION!

Before performing these operations, clean the filter as described in the "Maintenance, cleaning and decontamination" paragraph.

CAUTION!

Take care not to raise dust during this operation. Wear a P3 mask and other protective clothing plus protective gloves (PPE) suited to the hazardous nature of the dust collected, refer to the laws in force.

CAUTION!

Reassemble with care to avoid trapping your hands between the vacuum unit and the container. Use gloves that provide protection against mechanical risks (EN 388) with a level of protection CAT. II.

CAUTION!

Do not use the Class H filter again after having removed it from the machine.

Primary filter replacement

Figure 8

- Release the closing band (1).
- Lift the head using the handle (2).
- Remove the filter (3) by unscrewing the nut (4).
- Place the filter (3) in a plastic bag, close the bag hermetically and dispose of the filter in accordance with the laws in force.
- Insert a new filter (3) with the same filtering characteristics as the removed one.
- Block the filter with the nut (4).
- Put the head back in place and block it with the closing band (1).

Replacement of motor cooling filters

Figure 9

- Act on the clamping devices and remove the covers (1)
- Remove the absolute filter (2) and its gasket (3).
- Cover the absolute filter (2) with a plastic bag, close the bag tightly, dispose of the filter in accordance with the current legislation.
- Introduce a new absolute filter (2) with its gasket (3) of the same filtration characteristics as the replaced one.
- Reinstall the covers (1) and lock them in their place by acting on the clamping devices.

Tightness inspection

Hoses check

Make sure that connecting hoses are in a good condition and correctly fixed.

If the hoses are damaged, broken or badly connected to the unions, they must be replaced.

When sticky materials are treated, check for possible clogging along the hose, in the inlet and on the baffle plate inside the filtering chamber.

To clean, scrape the inlet from the outside to remove deposits.

Filtering chamber gasket check for machines equipped with dust container

Figure 10

If the gasket (1) between the container and the filtering chamber fails to guarantee sealing or if there are tears, cracks, etc., the gasket must be replaced.

Wiring diagrams

Figure 11

Name	Code	Description	Q.ty
Q1	4083901741	Switch 3P 16A	1
XM1	4083901908	Terminal block 3P	1
M1	4085300449	120V motor	1

US

Recommended spare parts

The following is a list of spare parts that should be kept ready at hand in order to speed up maintenance operations.

Refer to the manufacturer's spare parts catalogue when ordering spare parts.

Name		VHS010Nx C2D2
	Filter chamber / Container gasket	80554900
	Primary filter	Z8 17262
	Motor cooling filter	4081701863
	Paper Bag (DBS - 5 pcs)	107419592
	Safe Bag (SBS)	4084001573

US

Troubleshooting

Problem	Cause	Remedy
The machine does not start	Lack of power supply	Check for power at the socket. Check the condition of the socket and the cable. Ask for assistance to be performed by a qualified manufacturer's technician.
The machine revolutions increase	Clogged primary filter Clogged vacuum hose	Use the filter shaker (models with manual filter shaker). Replace it if this is not sufficient. Check the vacuum hose and clean it.
Dust leaks from the machine	The filter is torn Inadequate filter	Replace it with another of identical type. Replace it with another of a suitable category and check.
Electrostatic current on the machine	Missing or inefficient grounding	Check all ground connections. In particular on the vacuum inlet fitting; replace the hose with an antistatic hose.

US

Warranty

Nilfisk warrants that its equipment will be free of defects in workmanship or material for a period of two years from the date of delivery. If the vacuum fails to meet these warranty standards, Nilfisk shall, upon notification within such time period, correct such non-conformity, at its option, either by repairing any defective part or parts, or by replacing a part or parts, provided that the equipment is returned to an authorized Nilfisk service facility. In all cases freight both ways will be at expense of the customer. Equipment shall not be returned without advance notice to, and consent of Nilfisk.

EXCEPT AS SPECIFICALLY SET FORTH HEREIN, NILFISK MAKES NO WARRANTIES, EITHER EXPRESSED OR IMPLIED, AS TO ANY MATTER WHATSOEVER, INCLUDING WITHOUT LIMITATION ANY AND ALL WARRANTIES OF MERCHANTABILITY, FITNESS OF PURPOSE, OR OTHER WARRANTIES, ALL OF WHICH ARE EXPRESSLY DISCLAIMED AND EXCLUDED. NEITHER PARTY SHALL BE LIABLE TO THE OTHER FOR SPECIAL, INDIRECT, INCIDENTAL OR CONSEQUENTIAL DAMAGES, INCLUDING BUT NOT LIMITED TO LOSS OF PRODUCTION, LOSS OF PROFITS OR ANY OTHER SIMILAR INDIRECT LOSSES WHICH MIGHT OCCUR AS A RESULT OF DEFECTS, PARTIAL OR TOTAL FAILURE OF THE PRODUCT TO PERFORM AS SPECIFIED.

Correction of non-conformities or defects in the manner and for the period of time provided above, shall constitute fulfilment of all liabilities of Nilfisk to the customer, whether based on contract, negligence or otherwise with respect to, or arising out of such equipment. The remedies set forth herein are exclusive, and the liability of Nilfisk with respect to this sale or anything done in connection therewith, whether in contract, in tort, under any warranty, or otherwise, shall not, except as expressly provided herein, exceed the price of the equipment or part on which such liability is based.

This warranty does not cover repairs due to normal wear and tear, accident, neglect, misuse or abuse, incorrect installation or use other than as described in the instruction booklet. Breaks in hoses and cables are not covered.

This warranty is rendered void if the motor number plate is removed or defaced or if repairs are made or attempted by persons not authorized by Nilflsk.

Some states do not allow exclusion of implied warranties or limitations on how long an implied warranty lasts so the above exclusions or limitation of implied warranties may not apply. Some states do not allow exclusion or limitation of incidental or consequential damages so the above exclusion or limitation of incidental or consequential damages may not apply. Limited warranties set forth above give specific legal rights. Customer may have other rights which vary from state to state.

DISCLAIMER

The purchaser and intended user of this Nilfisk ClassII Div2 vacuum acknowledge that their Authority Having Jurisdiction (AHJ) as defined in Article 100 of the National Electric Code (NEC – NFPA 70) has determined this specific type of vacuum equipment is suitable for use in the intended applications and hazloc rated environments. Nilfisk-Advance, the product manufacturer, is not an AHJ and cannot approve any particular ClassII Div2 vacuum product for any specific application or use. It is the purchaser's and the intended user's responsibility to ensure that the vacuum is used properly as described in the instruction manual and in accordance with the AHJ's approval. By issuing a purchase order, the purchaser and intended user acknowledge understanding the role of their AHJ along with the capabilities and limitations of the vacuum equipment. If you require assistance in identifying your AHJ, please contact your local Nilfisk District Manager for assistance.

1

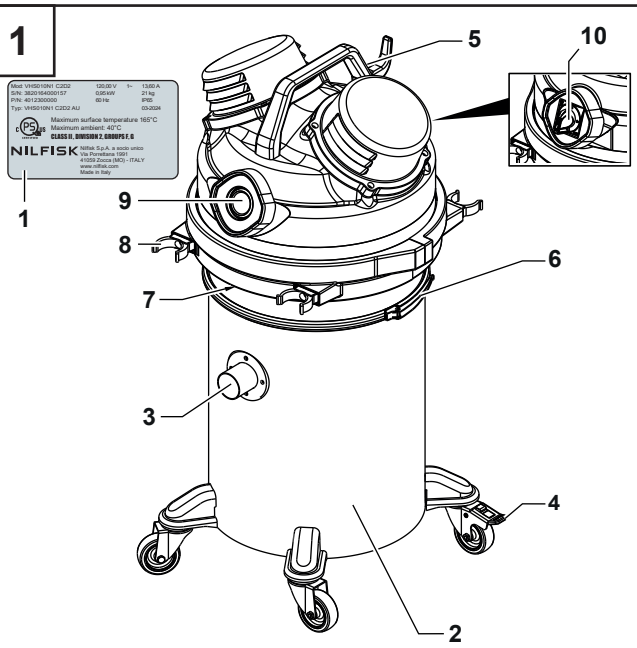
5
10
1
9
8
7
6
3
4
2
NILFISK

2

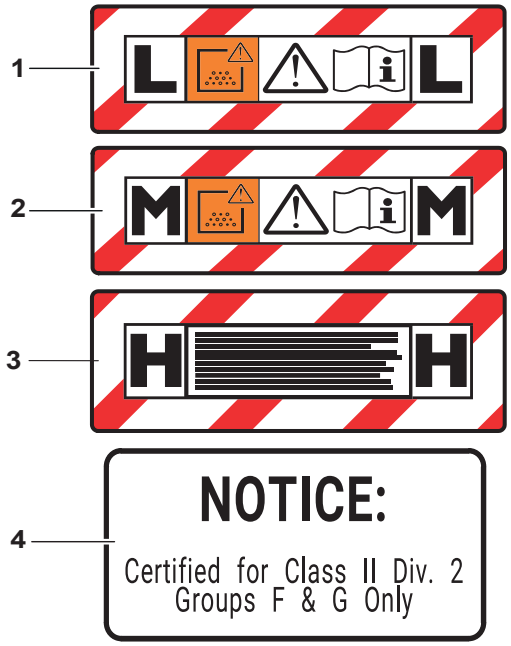
1
L
L
2
M
M
3
H
H
4
NOTICE:
Certified for Class II Div. 2
Groups F & G Only

3

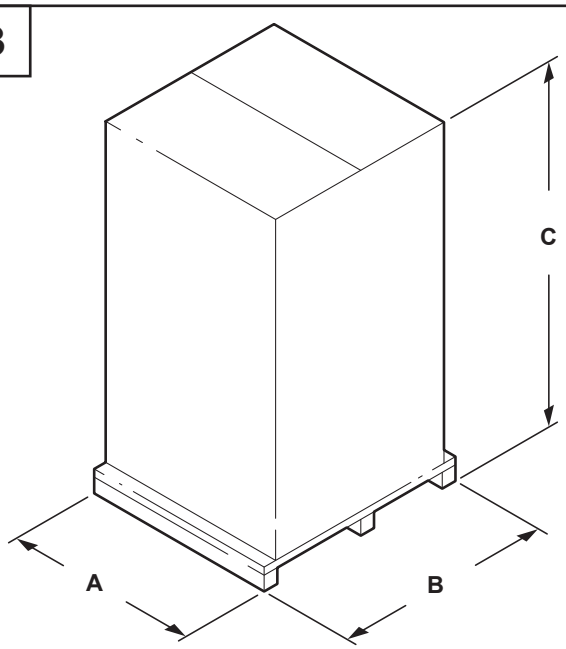
C
A
B

4

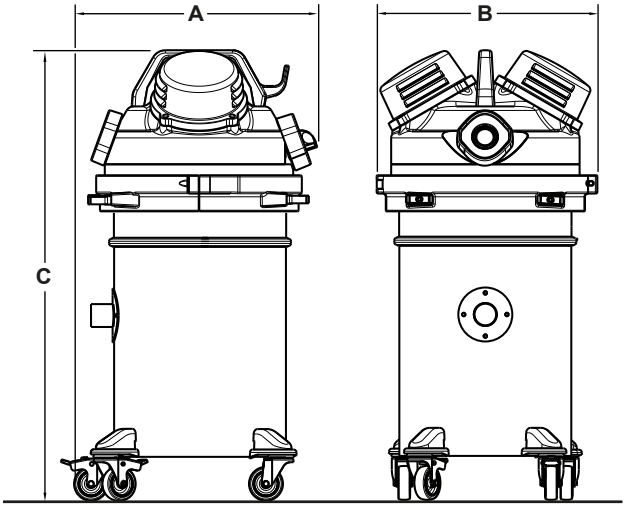
A
B
C

5

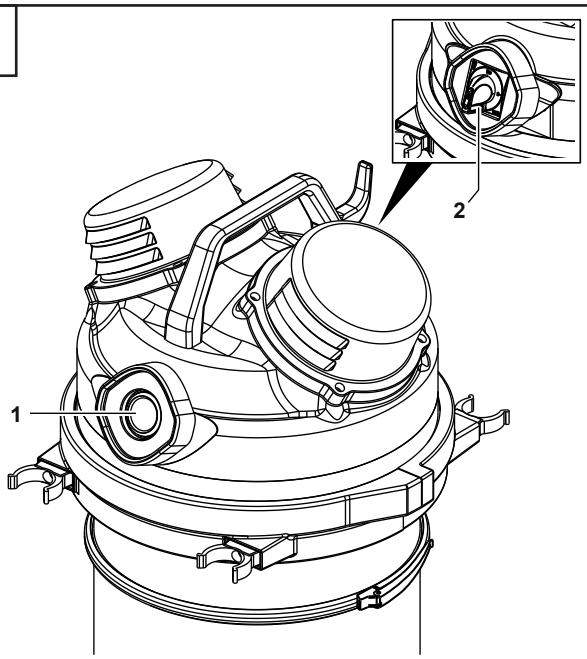
2
1

6

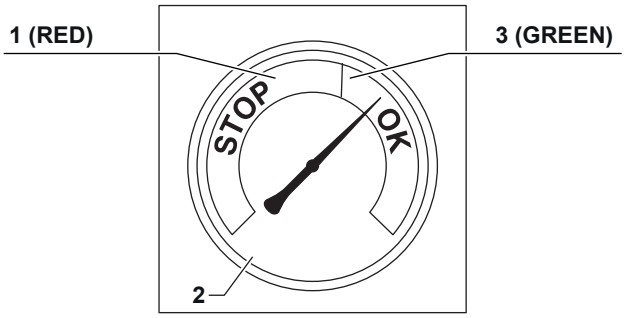
1 (RED)
3 (GREEN)
STOP
OK
2

7

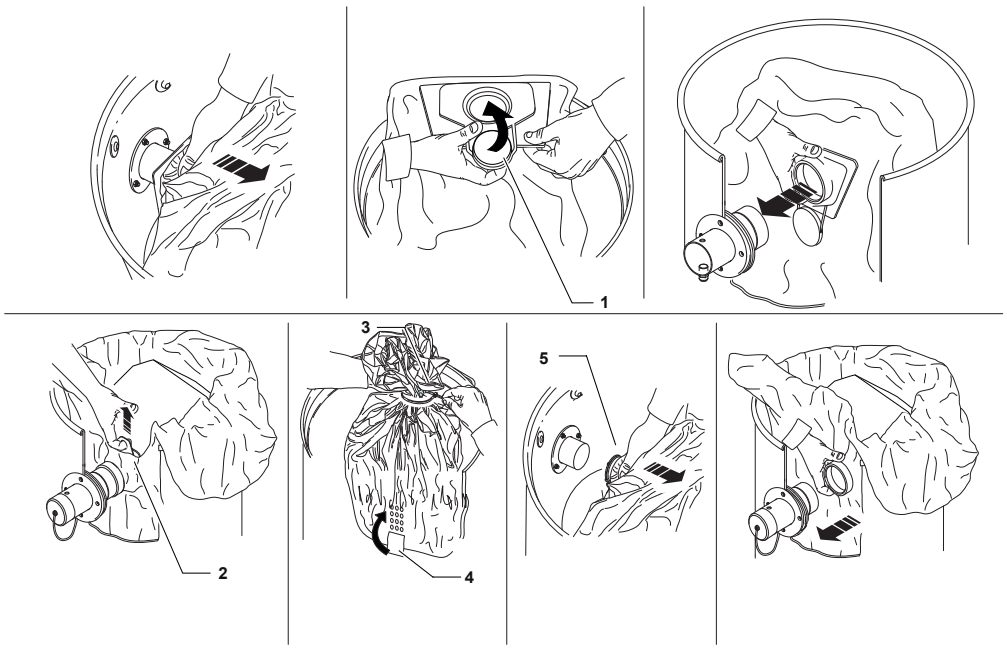

8

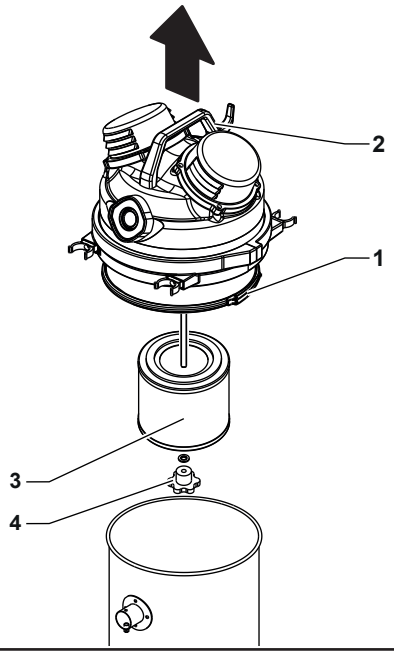

9

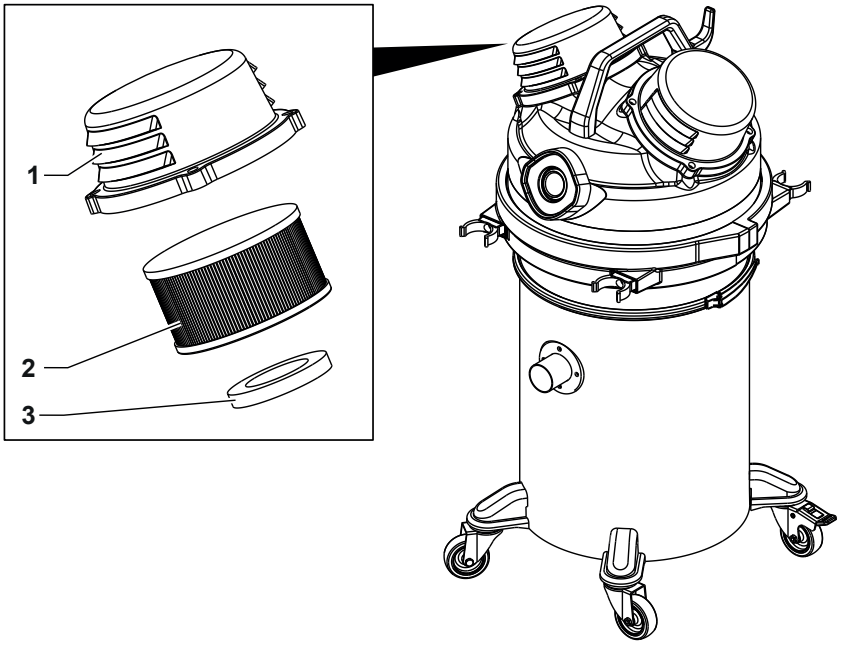

10

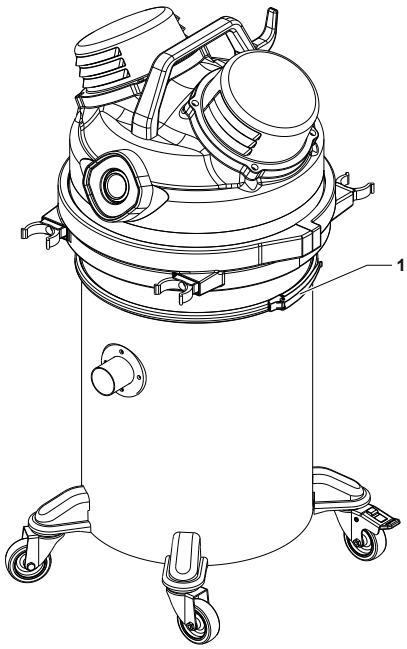
1

11

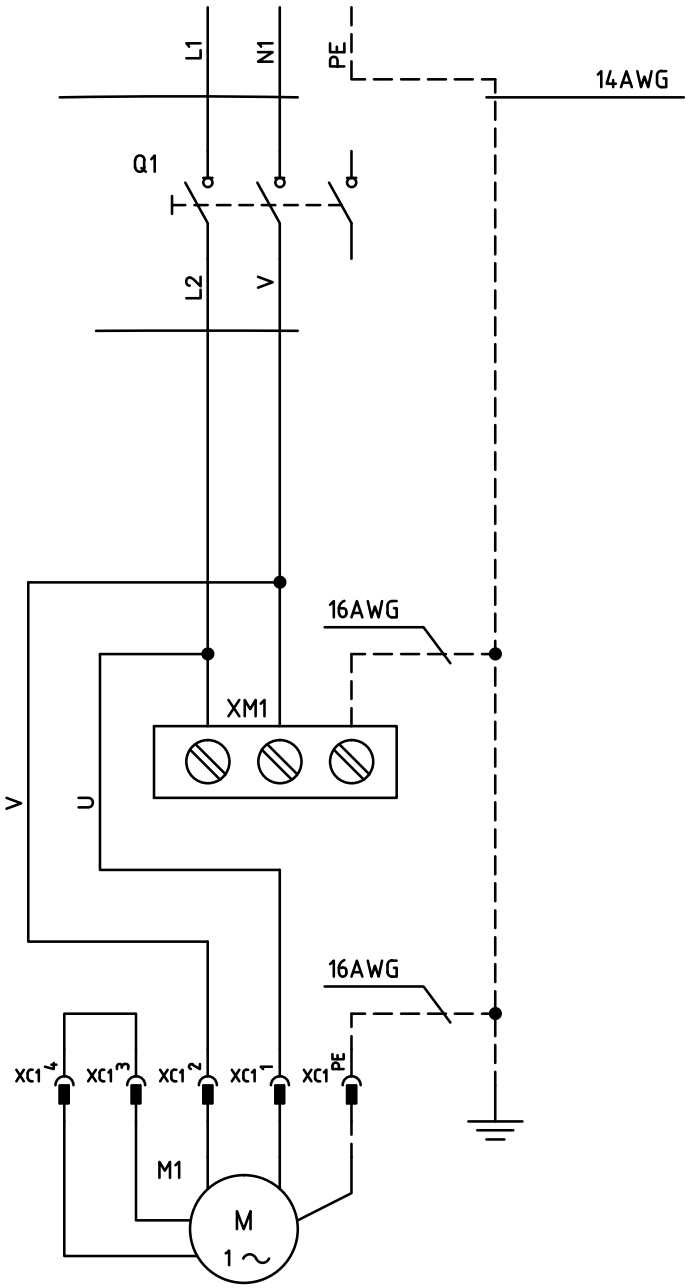
L1
N1
PE
14AWG
Q1
T
L2
V
16AWG
XM1
V
U
16AWG
XC1 4
XC1 3
XC1 2
XC1 1
XC1 PE
M1
M
1 ~

Nilfisk SpA a socio unico
Via Porrettana, 1991 - 41059 Zocca
Modena - Italy
Tel. +39 059 9730000 - Fax +39 059 9730065
industrial-vacuum@nilfisk.com
www.nilfisk.com

NILFISK