B10

Rider Burnisher

Parts Manual

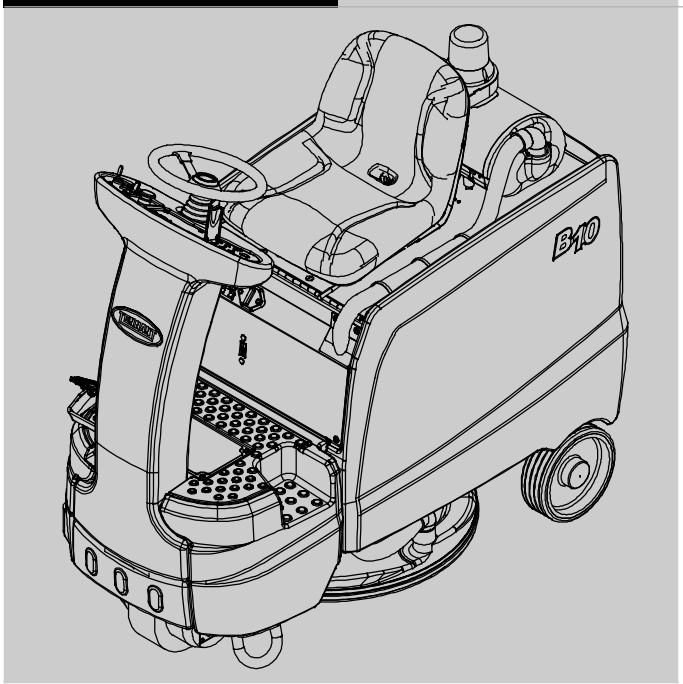

Tennant*True*® Parts

Global

For the latest Parts manuals and other language Operator manuals, visit:

www.tennantco.com/manuals

9010729
Rev. 08 (05-2023)

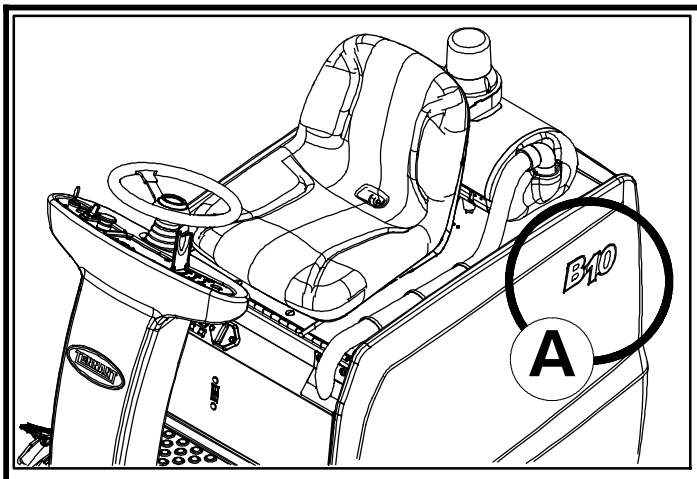

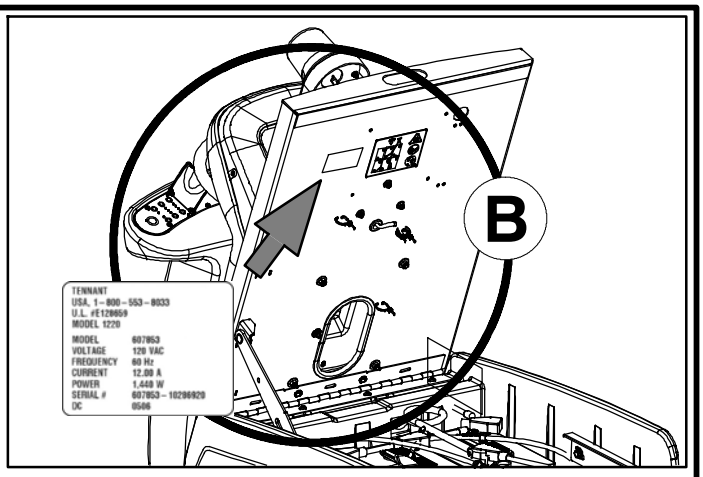

Ref	Part No.	Serial Number	Description	Qty.
1	82681	(000000-)	Bracket Wldt, Lpg Mount	1
▽ 2	63810	(000000-)	Latch Assy, Lpg Tank Mtg, W/Nut	4
▲ 3	51839	(000000-)	Nut Adjustable, Lpg Tank Mtg	2
4	49263	(000000-)	Tie, Cable	3
	82556	(000000- 001039)	Bracket, Vaporizer	1
	54930	(000000-)	Vaporizer, LPG	1

D

C

HOW TO ORDER PARTS - See diagram above

Only use TENNANT Company supplied or equivalent parts. Parts and supplies may be ordered online, by phone, by fax or by mail.

Follow the steps below to ensure prompt delivery.

1. **(A)** Identify the machine model.
2. **(B)** Identify the machine serial number from the data label.
3. **(C)** Ensure the proper serial number is used from the parts list.
4. Identify the part number and quantity. Do not order by page or reference numbers.
5. Provide your name, company name, customer ID number, billing and shipping address, phone number and purchase order number.
6. Provide detail shipping instructions.

(D) ▽ - identifies an assembly
▲ - identifies parts included in assembly

Please fill out at time of installation for future reference.

Model No. - _____

Serial No. - _____

Machine Options - _____

Sales Rep. - _____

Sales Rep. phone no. - _____

Customer ID Number - _____

Installation Date - _____

Tennant Company
10400 Clean Street
Eden Prairie, MN 55344-2650 USA
Phone: (800) 553-8033

www.tennantco.com

Tennant Company N.V.
Industrielaan 6 5405 AB
P.O. Box 6 5400 AA
Uden- The Netherlands

europe@tennantco.com
www.tennantco.com

Specifications and parts are subject to change without notice.

Copyright © 2013-2023 TENNANT Company, Printed in U.S.A.

STANDARD PARTS

GENERAL RECOMMENDED MAINTENANCE ITEMS 4
PAD DRIVER GROUP, 610 MM (24 IN) 6
PAD DRIVER GROUP, 686 MM (27 IN) 8
MAIN FRAME GROUP 10
SEAT GROUP 12
STEERING GROUP 14
INSTRUMENT PANEL GROUP 16
FRONT DRIVE WHEEL GROUP 18
BRAKE AND ACCELERATOR PEDAL GROUP (S/N 10644214-) 20
BRAKE AND ACCELERATOR PEDAL GROUP (S/N 00000000- 10644213) 22
HEAD LIFT GROUP 24
MAIN HOUSING GROUP 26
FRONT SHROUD GROUP 28
ELECTRICAL PANEL GROUP 30
ELECTRICAL COMPONENTS GROUP 32
CIRCUITBOARD GROUP 34
ACTIVE DUST CONTROL GROUP 36
BATTERY GROUP, WET 435AH 38
ON- BOARD CHARGER GROUP 40
LABEL GROUP 42
ELECTRICAL SCHEMATIC 44
HARNESS GROUP, MAIN 46
HARNESS GROUP, MAIN - CONT'D 47
HARNESS GROUP, MOTOR 49
HARNESS GROUP, CONTROL BOARD 50
HARNESS GROUP, LIGHT 51
HARNESS GROUP, ALARM 52
HARNESS GROUP, MOTOR BRAKE 53

OPTIONS

BATTERY GROUP, AGM 390AH 54
OFF- BOARD CHARGER GROUP 56
MANUAL BATTERY WATERING SYSTEM (S/N 11021889-) 58
HYDROLINK® BATTERY WATERING SYSTEM KIT (S/N 00000000- 11021888) 60
FLASHING LIGHT KIT 62
WALL ROLLER (686 MM / 27 IN HEAD) GROUP 64
DOCUMENTATION GROUP (ONLINE ONLY) . . . 66

BREAKDOWNS

ACTIVE DUST CONTROL BREAKDOWN, 1200929 68
FRONT DRIVE WHEEL BREAKDOWN, 9008999 70
STEERING CONTROL BREAKDOWN, 1019724 72

GENERAL RECOMMENDED MAINTENANCE ITEMS

	Part No.	Serial Number	Description	Qty.
∇	9013143	(00000000-)	Motor Kit, Burnish, Replmt [B10]	1
▲	1206641	(00000000-)	Brush Assy, Carbon, Afmkt (Includes Qty 8- Carbon Brushes, 8- Springs & 2- Electrical Terminals)	1
	00928	(00000000-)	Key, Sq, 0.25 X 0.25, 1.00l	1
	1205730	(00000000-)	Shroud Assy, Dust- Cntrl, Stepped, 24.0d	1
	1205728	(00000000-)	Shroud Assy, Dust- Cntrl, Stepped, 27.0d	1
	1200750	(00000000-)	Skirt Assy, Shrd, 24.0d	1
	1200686	(00000000-)	Skirt Assy, Shrd, 27.0d	1
∇	1213331	(00000000-)	Driver Assy, Pad, 24d	1
∇	1213332	(00000000-)	Driver Assy, Pad, 27d	1
▲	32506	(00000000-)	Device, Centering, Rh Pad Retainer	1
▲	1205787	(00000000-)	Collar, Locking, Pad Driver, 6.1”	1
	1243675	(00000000-)	Pad, Burnish, 24.0d Hairblnd[1pick=1ctn]	1
	1243676	(00000000-)	Pad, Burnish, 27.0d Hairblnd[1pick=1ctn]	1
	9010993	(00000000-)	Bumper, Strip, Afmkt, 3 Ft	1
	1048955	(00000000-)	Switch, Seat, No [Delta 6440- 04]	1
	1202142	(00000000-)	Pad, Rbr, 0.12 X 1.4 X 22.7, Adh	1
∇	1011402	(00000000-)	Switch, Key	1
▲	1017696	(00000000-)	Key Set, Replmt [F/ Keyswitch 1011402]	1
	1018505	(00000000-)	Horn, 12- 48vdc [88.5 Decibels]	1
	9014886	(00000000-)	Actuator Kit, Install, Afmkt [B10]	1
	1205672	(00000000-)	Spring, Extn, 1.211od 0.200wir 05.5l	2
	1202188	(00000000-)	Bushing, Flng, 0.63b 0.75d 0.63l, Bnz	2
	1014020	(00000000-)	Roller, Lift, Dual Disk Head	2
	1202820	(00000000-)	Spring, Comp, 0.520b, 3.95l	2
	1202539	(00000000-)	Bushing, Flng, Ss, 0.404b 0.612d 0.674l	10
	1202378	(00000000-)	Bushing, 0.63b 0.75d 0.50l, Bnz	8
	1202821	(00000000-)	Spring, Comp, 0.520b, 6.5l	2
	1202544	(00000000-)	Spring, Comp, 0.550id, 0.120wir, 0.850l	2
	1200585	(00000000-)	Shunt, Current, 200a	1
	1203357	(00000000-)	Contactor Assy, 36vdc, 250a, Spst, No	1
	1201381	(00000000-)	Wire, Assy, Cable 16.0 2awg, Red	1
	1201383	(00000000-)	Harness, Battery, Orion	1
∇	9011014	(00000000-)	Circuitboard Kit, Afmkt	1
▲	1030692	(00000000-)	Vr, Fuse, 15a, Replmt	1
▲	1016816	(00000000-)	Pad, Thermal, Heat Sink	1
	1205540	(00000000-)	Boot, Terminal, Battery, 1/0- 2/0ga, Blk	12
	1204146	(00000000-)	Battery, Wet, 06vdc 435ah, W/ Box (Includes Hardware)	6
	1262282	(00000000-)	Battery, Agm, 06vdc 390ah, W/Box	6
	1201394	(00000000-)	Harness, Charger, On Board [Orion]	1
	1201389	(00000000-)	Harness, Charger, Off Board [Orion]	1
	1069053	(00000000-)	Harness, Main [Orion]	1
	1069866	(00000000-)	Harness, Motor, [Orion]	1

∇ ASSEMBLY

▲ INCLUDED IN ASSEMBLY

GENERAL RECOMMENDED MAINTENANCE ITEMS

	Part No.	Serial Number	Description	Qty.
∇	9011001	(00000000-)	Charger Kit, 36vdc 120vac, On- Brd, [Na]	1
▲	1206662	(00000000-)	Fuse, 015a, 250vac [Baf- 15]	1
▲	130155	(00000000-)	Connector, Battery, 6ga 50a, Gray[2cont]	1
∇	9011009	(00000000-)	Charger Kit, 36vdc 120vac, Off- Brd, [Na]	1
▲	1206662	(00000000-)	Fuse, 015a, 250vac [Baf- 15]	1
▲	130155	(00000000-)	Connector, Battery, 6ga 50a, Gray[2cont]	1
	1011735	(00000000-)	Switch, Safety, Shutoff	1
	1072040	(00000000-)	Switch, Rocker, Spst, Paddle	1
	1013132	(00000000-)	Switch, Lever, Snap Actn	1
	222460	(00000000-)	Sleeve, P/M, 0.32b 0.50d 0.5l [430ss]	10
	222178	(00000000-)	Roller, Pyu, 1.88d 0.53b 3.05l	1
	9007784	(00000000-)	Bag, Vacuum, 6 Qt [1pick=1pkg/12 Bags] (Qty 1 Included w/ Machine) (Active Dust Control Model)	1
	9007866	(00000000-)	Bag, Vacuum, 6 Qt [1pk=1ctn/16=192 Bags] (Active Dust Control Model)	1
	9007785	(00000000-)	Bag, Cloth, Afkmt, 6 Qt (Qty 1 Included w/ Machine) (Active Dust Control Model)	1
	9007800	(00000000-)	Filter, Exhaust [1pick=1pkg] (1 Pkg = 6 Filters) (Active Dust Control Model)	1
	9007812	(00000000-)	Filter, Hepa, Fr/ (Active Dust Control Model)	1
	9007802	(00000000-)	Fan, Vacuum, Backpack, Fr(Includes 1- M4x6 Set Screw) (Active Dust Control Model)	1

∇ ASSEMBLY

▲ INCLUDED IN ASSEMBLY

PAD DRIVER GROUP, 610 MM (24 IN)

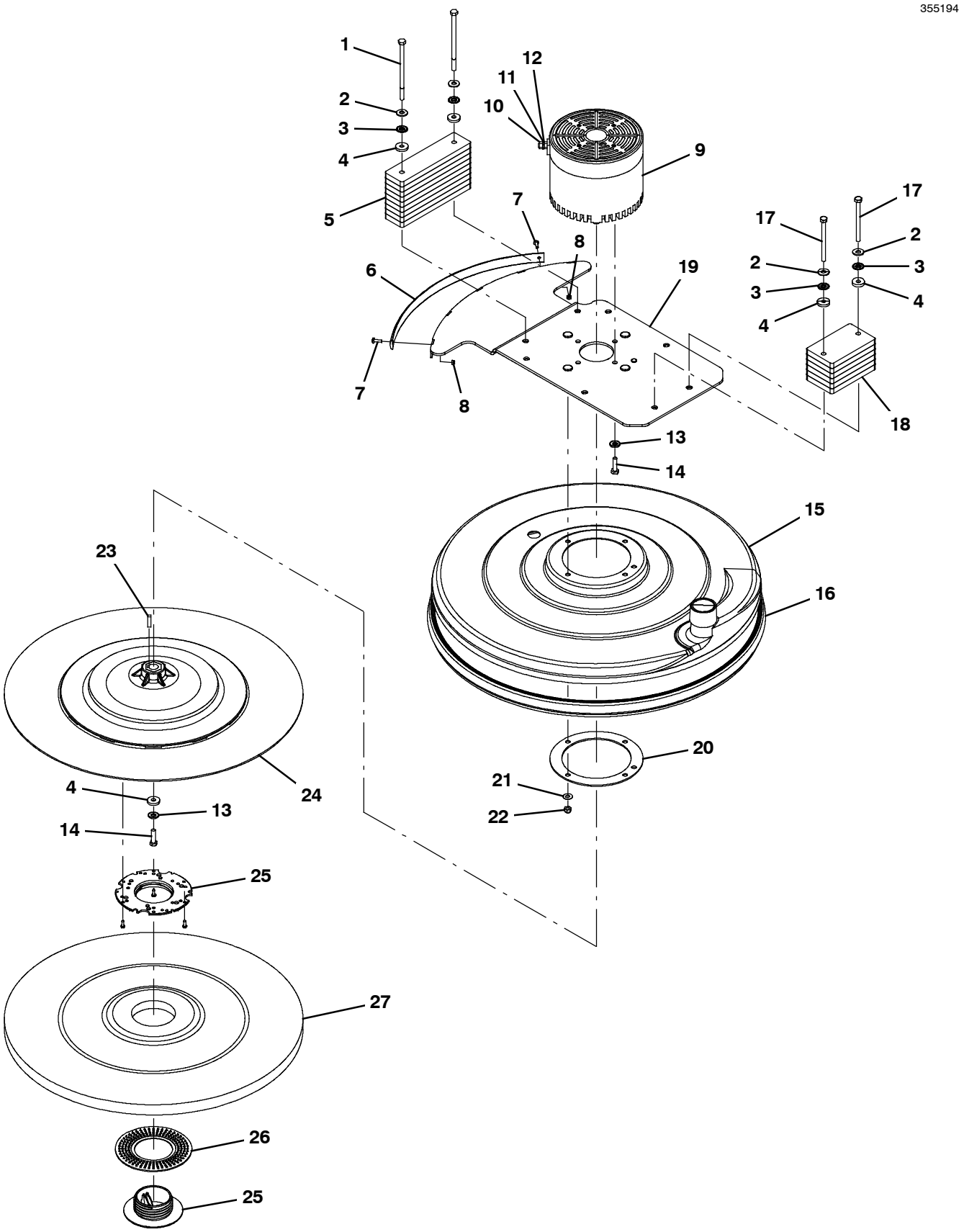

PAD DRIVER GROUP, 610 MM (24 IN)

	Ref.	Part No.	Serial Number	Description	Qty.
	1	1201996	(00000000-)	Screw, Hex, M8 X 1.25 X 140, Ss	2
	2	01685	(00000000-)	Washer, Flat, 0.38b 0.88d .08, Ss	4
	3	41141	(00000000-)	Washer, Lock, Int- Ext, 0.31	4
	4	1028796	(00000000-)	Washer, Flat, 0.33b 1.00d .18, Stl, Pl	5
	5	1205469	(00000000-)	Block, Mass, 24in Scrub Head, Long	9
	6	9010993	(00000000-)	Bumper, Strip, Afmkt, 3 Ft	1
	7	1045487	(00000000-)	Screw, Pan, Phl, M5 X 0.80 X 16, Blk	2
	8	09739	(00000000-)	Nut, Hex, Lock, M5 X 0.80, Nl, Ss	2
∇	9	9013143	(00000000-)	Motor Kit, Burnish, Replmt [B10]	1
▲		1206641	(00000000-)	Brush Assy, Carbon, Afmkt (Includes Qty 8- Carbon Brushes, 8- Springs & 2- Electrical Terminals)	1
▲	10	87435	(00000000-)	Nut, Hex, Flexlock, .31- 18	2
▲	11	39349	(00000000-)	Washer, Flat, 0.31, Sae	2
▲	12	32984	(00000000-)	Washer, Lock, Int, 0.31	2
	13	41186	(00000000-)	Washer, Flat, Belleville, .31	5
	14	1016399	(00000000-)	Screw, Hex, M8 X 1.25 X 30, Nl, Ss	5
	15	1205730	(00000000-)	Shroud Assy, Dust- Cntrl, Stepped, 24.0d	1
	16	1200750	(00000000-)	Skirt Assy, Shrd, 24.0d	1
	17	386299	(00000000-)	Screw, Hex, M8 X 1.25 X 100, Ss	2
	18	1205475	(00000000-)	Block, Mass, 24in Scrub Head, Short	6
	19	1200757	(00000000-)	Plate Wldt, Mount, Motor, 24in	1
	20	1200676	(00000000-)	Plate, Backing, Dust- Cntrl	1
	21	01685	(00000000-)	Washer, Flat, 0.38b 0.88d .08, Ss	4
	22	08713	(00000000-)	Nut, Hex, Lock, M8 X 1.25, Nl, Ss	4
	23	00928	(00000000-)	Key, Sq, 0.25 X 0.25, 1.00l	1
∇	24	1213331	(00000000-)	Driver Assy, Pad, 24d	1
▲	25	32506	(00000000-)	Device, Centering, Rh Pad Retainer	1
▲	26	1205787	(00000000-)	Collar, Locking, Pad Driver, 6.1”	1
	27	1243675	(00000000-)	Pad, Burnish, 24.0d Hairblnd[1pick=1ctn]	1

∇ ASSEMBLY

▲ INCLUDED IN ASSEMBLY

PAD DRIVER GROUP, 686 MM (27 IN)

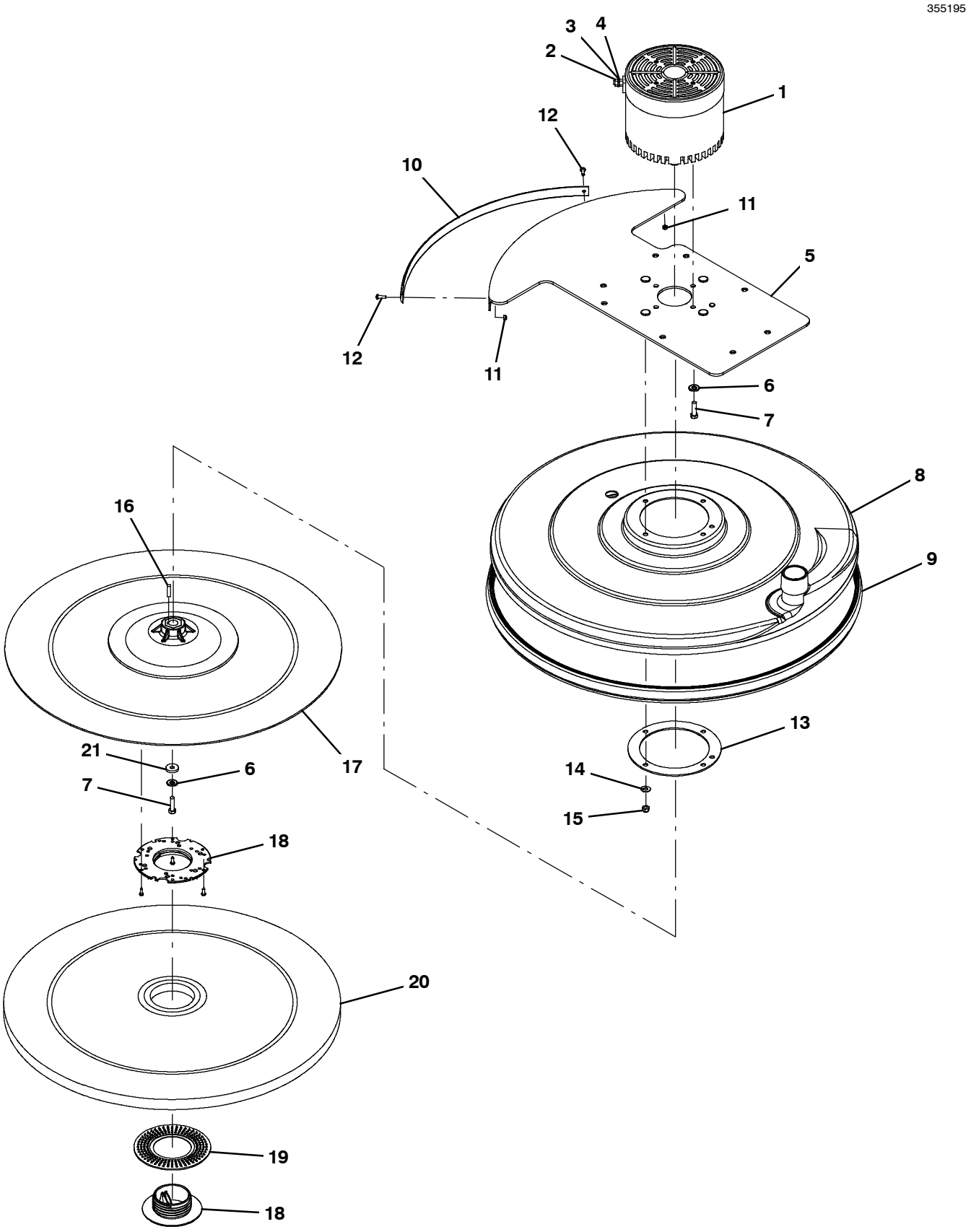

PAD DRIVER GROUP, 686 MM (27 IN)

	Ref.	Part No.	Serial Number	Description	Qty.
∇	1	9013143	(00000000-)	Motor Kit, Burnish, Replmt [B10]	1
▲		1206641	(00000000-)	Brush Assy, Carbon, Afmkt (Includes Qty 8- Carbon Brushes, 8- Springs & 2- Electrical Terminals)	1
▲	2	87435	(00000000-)	Nut, Hex, Flexlock, .31- 18	2
▲	3	39349	(00000000-)	Washer, Flat, 0.31, Sae	2
▲	4	32984	(00000000-)	Washer, Lock, Int, 0.31	2
	5	1200543	(00000000-)	Plate Wldt, Mount, Motor, 27in	1
	6	41186	(00000000-)	Washer, Flat, Belleville, .31	5
	7	1016399	(00000000-)	Screw, Hex, M8 X 1.25 X 30, Nl, Ss	5
	8	1205728	(00000000-)	Shroud Assy, Dust- Cntrl, Stepped, 27.0d	1
	9	1200686	(00000000-)	Skirt Assy, Shrd, 27.0d	1
	10	9010993	(00000000-)	Bumper, Strip, Afmkt, 3 Ft	1
	11	09739	(00000000-)	Nut, Hex, Lock, M5 X 0.80, Nl, Ss	2
	12	1045487	(00000000-)	Screw, Pan, Phl, M5 X 0.80 X 16, Blk	2
	13	1200676	(00000000-)	Plate, Backing, Dust- Cntrl	1
	14	01685	(00000000-)	Washer, Flat, 0.38b 0.88d .08, Ss	4
	15	08713	(00000000-)	Nut, Hex, Lock, M8 X 1.25, Nl, Ss	4
	16	00928	(00000000-)	Key, Sq, 0.25 X 0.25, 1.00l	1
∇	17	1213332	(00000000-)	Driver Assy, Pad, 27d	1
▲	18	32506	(00000000-)	Device, Centering, Rh Pad Retainer	1
▲	19	1205787	(00000000-)	Collar, Locking, Pad Driver, 6.1”	1
	20	1243676	(00000000-)	Pad, Burnish, 27.0d Hairblnd[1pick=1ctn]	1
	21	1028796	(00000000-)	Washer, Flat, 0.33b 1.00d .18, Stl, Pl	1

∇ ASSEMBLY

▲ INCLUDED IN ASSEMBLY

MAIN FRAME GROUP

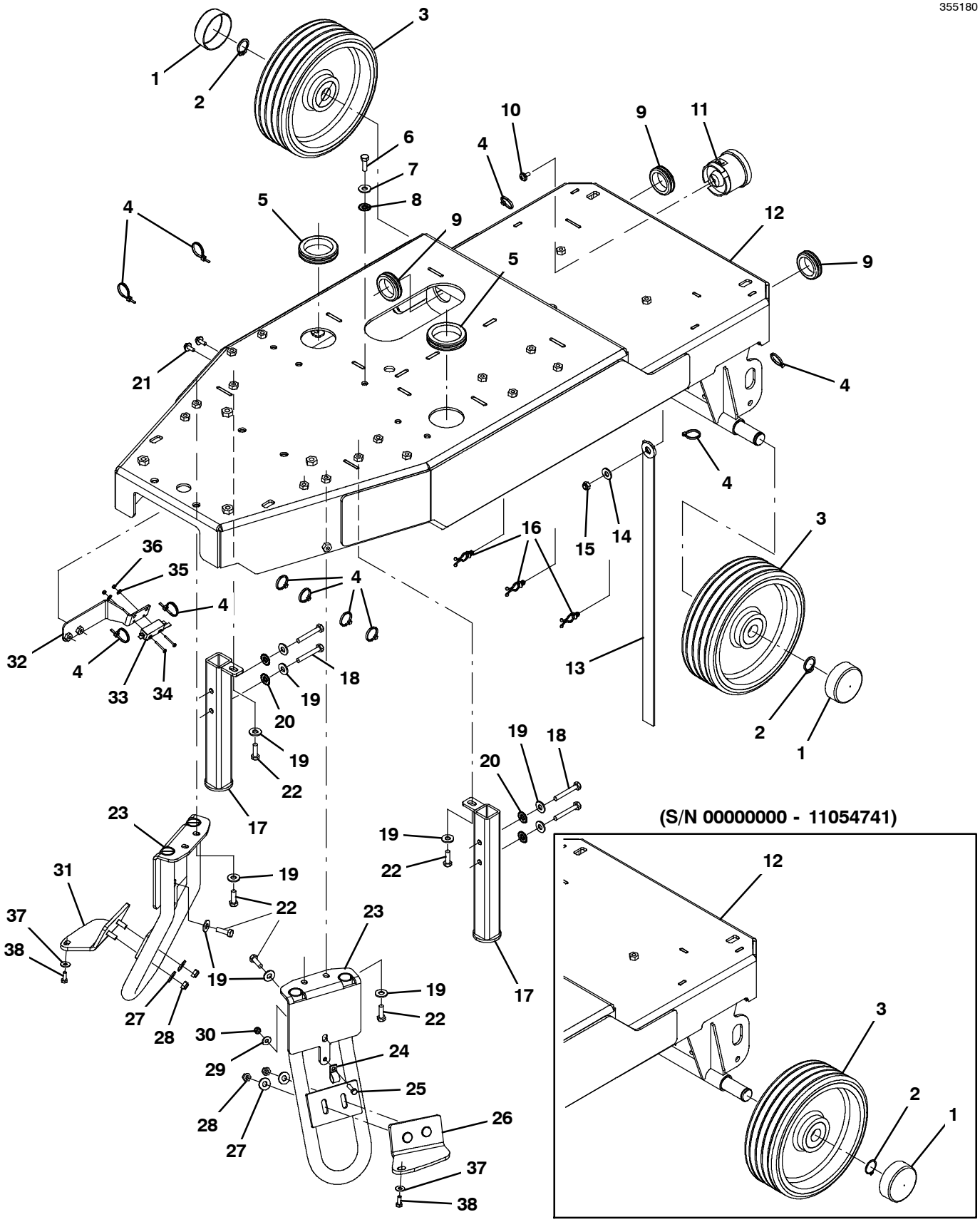

MAIN FRAME GROUP

Ref.	Part No.	Serial Number	Description	Qty.
1	1016957	(00000000-)	Cap, Vyl, 70mmid X 25mml	2
2	1257594	(11054742-)	Ring, Retaining, Shaft, Ext, 25mmd, Hd	2
2	09005	(00000000- 11054741)	Ring, Retaining, Ext, 1.00d, Basic (For Use With Frame 1200530)	2
3	1038560	(00000000-)	Tire Assy, Solid, 250mm X 80mm, 25mmid	2
4	130773	(00000000-)	Tie, Cable, Nyl, 11.0l, .14w, 3.0 Max. D	11
5	1202181	(00000000-)	Grommet, Rbr, 2.13id, F/2.5h, .19 Matl	2
6	12333	(00000000-)	Screw, Hex, M8 X 1.25 X 25, Ss, Nl	1
7	01685	(00000000-)	Washer, Flat, 0.38b 0.88d .08, Ss	1
8	41141	(00000000-)	Washer, Lock, Int- Ext, 0.31	1
9	10632- 13	(00000000-)	Grommet, Rbr, 1.50id, F/1.8h, .19 Matl	3
10	1019349	(00000000-)	Screw, Trs, M6 X 1.00 X 16, Ss, Sems	1
11	1018505	(00000000-)	Horn, 12- 48vdc [88.5 Decibels]	1
12	1259584	(11054742-)	Frame Wldt, Sppt, Main	1
12	1200530	(00000000- 11054741)	Frame Wldt, Sppt, Main (Replaced By 1259584 & Qty 2 of 1257594)	1
13	71579	(00000000-)	Strap, Static, W/Grommet, .19 1.1w 25.0l	1
14	01685	(00000000-)	Washer, Flat, 0.38b 0.88d .08, Ss	1
15	08713	(00000000-)	Nut, Hex, Lock, M8 X 1.25, Nl, Ss	1
16	30406	(00000000-)	Clip, Keeper	3
17	1201529	(00000000-)	Jack Wldt	2
18	222504	(00000000-)	Screw, Hex, M8 X 1.25 X 55, Ss	4
19	01685	(00000000-)	Washer, Flat, 0.38b 0.88d .08, Ss	12
20	41141	(00000000-)	Washer, Lock, Int- Ext, 0.31	4
21	1034731	(00000000-)	Screw, Hex, M6 X 1.00 X 16, Ss, Sems	2
22	12333	(00000000-)	Screw, Hex, M8 X 1.25 X 25, Ss, Nl	8
23	1200540	(00000000-)	Tube Wldt, Rop	2
24	140300	(00000000-)	Clamp, Cable, Stl, 0.50d [Insulated]	1
25	08716	(00000000-)	Screw, Hex, M6 X 1.00 X 20, Ss	1
26	1202858	(00000000-)	Bracket Wldt, Sppt, Front, Lh	1
27	01685	(00000000-)	Washer, Flat, 0.38b 0.88d .08, Ss	4
28	08713	(00000000-)	Nut, Hex, Lock, M8 X 1.25, Nl, Ss	4
29	01684	(00000000-)	Washer, Flat, 0.27b 0.69d .05, Ss	1
30	08712	(00000000-)	Nut, Hex, Lock, M6 X 1.00, Nl, Ss	1
31	1202846	(00000000-)	Bracket Wldt, Sppt, Front, Rh	1
32	1201742	(00000000-)	Bracket Wldt, Mounting, Switch	1
33	1013132	(00000000-)	Switch, Lever, Snap Actn	1
34	33933	(00000000-)	Screw, Pan, Phl, M3 X 0.50 X 25, Ss	2
35	41578	(00000000-)	Washer, Flat, 06, Ss	2
36	579211	(00000000-)	Nut, Hex, Lock, M3 X 0.50, Nl, Ss	2
37	01684	(00000000-)	Washer, Flat, 0.27b 0.69d .05, Ss	2
38	11329	(00000000-)	Screw, Hex, M6 X 1.00 X 16, Nl, Ss	2

SEAT GROUP

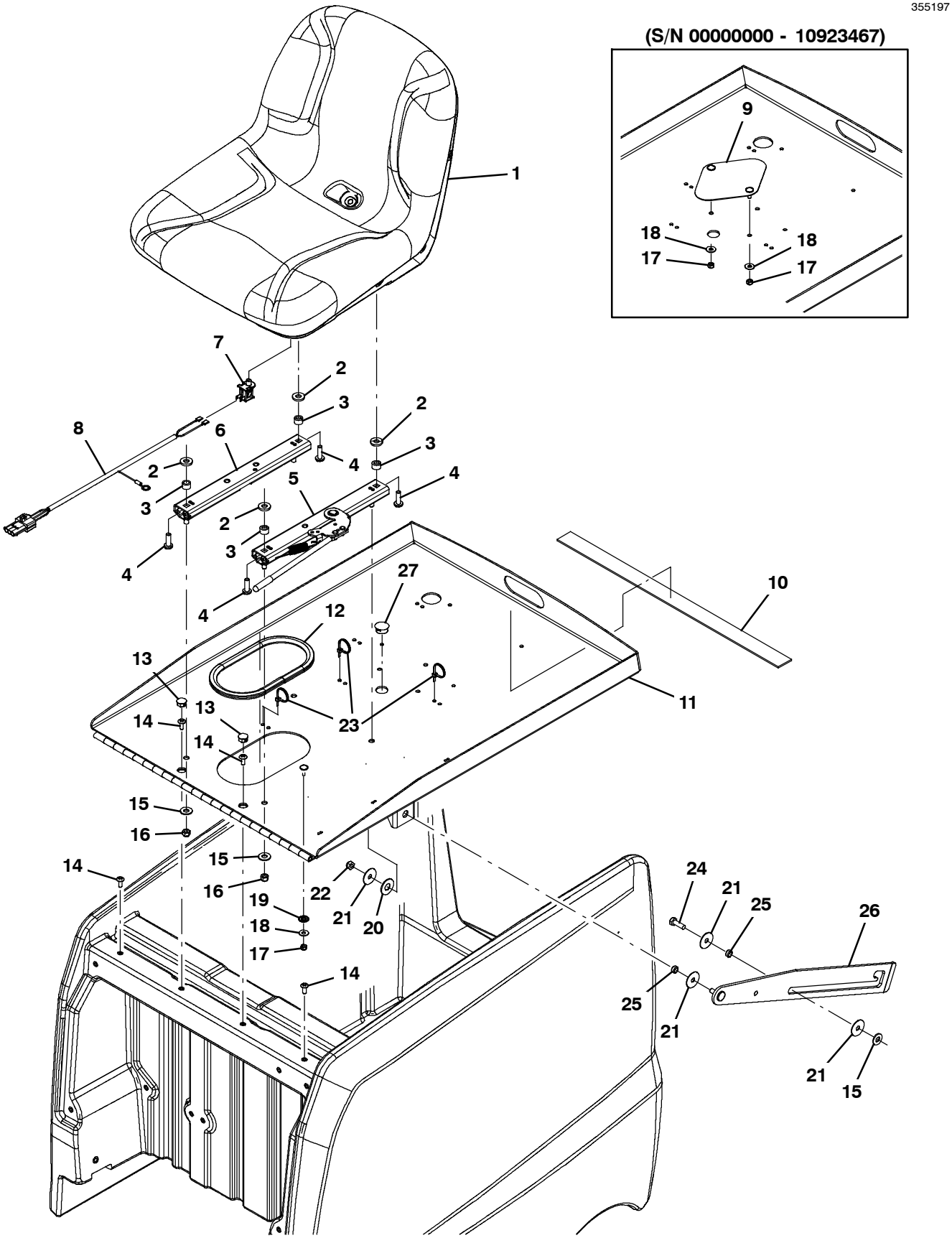
355197
(S/N 00000000 - 10923467)
1
2
3
4
5
6
7
8
9
10
11
12
13
14
15
16
17
18
19
20
21
22
23
24
25
26
27

SEAT GROUP

Ref.	Part No.	Serial Number	Description	Qty.
1	9005082	(10611440-)	Seat Kit, Std, Replmt (Kit Includes Screw and Spacer)	1
1	1048932	(00000000- 10611439)	Seat, Std [Michigan, Model V- 2505] (Replaced by 9005082)	1
2	69461	(00000000-)	Washer, Flat, 0.38b 0.88d .12, Stl, Pl	4
3	1051052	(00000000-)	Spacer, Rnd, .38b .88d .38l	4
4	49177	(00000000-)	Screw, Pan, Phl, .31- 18 X 1.00, G2	4
5	1077071	(AUG2021-)	Track, Locking, 12.5l, No Stud W/Handle	1
5	1074205	(00000000- JUL2021)	Rail, Adj, Slide Seat,11.5l, W/Latch,Yel (Replaced By 1077071)	1
6	1077067	(AUG2021-)	Track, N- Lkg, Seat, 12.5l, No Stud	1
6	1017053	(00000000- JUL2021)	Rail, Adj, Slide, Seat, 11.5l (Replaced By 1077067)	1
7	1048955	(00000000-)	Switch, Seat, No [Delta 6440- 04]	1
8	391951	(00000000-)	Harness, Seat [T7/Ssr]	1
9	1204413	(00000000- 10923467)	Plate Wldt, Cover, Hole, Flasher (Models w/out Flashing Light Option) (No Longer Available)	1
10	1202142	(00000000-)	Pad, Rbr, 0.12 X 1.4 X 22.7, Adh	1
11	9010990	(00000000-)	Plate, Seat, Afmkt, Adc [B10] [Na/Aus]	1
11	9010991	(00000000-)	Plate, Seat, Afmkt, Adc [B10] [Ce/Korea]	1
12	1020170	(00000000-)	Molding, Afmkt, Trim, Pvc, .08 .11, 02ft	1
13	1058340	(00000000-)	Plug, Hole, Rnd, .63h 0.1l, Blk	2
14	1202143	(00000000-)	Screw, Trs, M6 X 1.00 X 16, Phl, Nl, Blk	4
15	01685	(00000000-)	Washer, Flat, 0.38b 0.88d .08, Ss	5
16	140546	(00000000-)	Nut, Hex, Lock, .31- 18, Nl, Ss	4
17	08712	(10923468-)	Nut, Hex, Lock, M6 X 1.00, Nl, Ss	1
17	08712	(00000000- 10923467)	Nut, Hex, Lock, M6 X 1.00, Nl, Ss	3
18	01684	(10923468-)	Washer, Flat, 0.27b 0.69d .05, Ss	1
18	01684	(00000000- 10923467)	Washer, Flat, 0.27b 0.69d .05, Ss	3
19	41140	(00000000-)	Washer, Lock, Int- Ext, 0.25	1
20	86952	(00000000-)	Washer, Flat, 0.52b 1.25d .06, Nyl	1
21	30013	(00000000-)	Washer, Flat, 0.31, Fendr	4
22	08713	(00000000-)	Nut, Hex, Lock, M8 X 1.25, Nl, Ss	1
23	130773	(00000000-)	Tie, Cable, Nyl, 11.0l, .14w, 3.0 Max. D	3
24	12333	(00000000-)	Screw, Hex, M8 X 1.25 X 25, Ss, Nl	1
25	360801	(00000000-)	Sleeve, 0.32b 0.50d 0.3l, 2cham, Ss	2
26	1201445	(00000000-)	Bracket Wldt, Arm, Prop	1
27	130161	(10923468-)	Plug, Hole, Rnd, 0.88d Blk (Models w/out Flashing Light Option)	1

STEERING GROUP

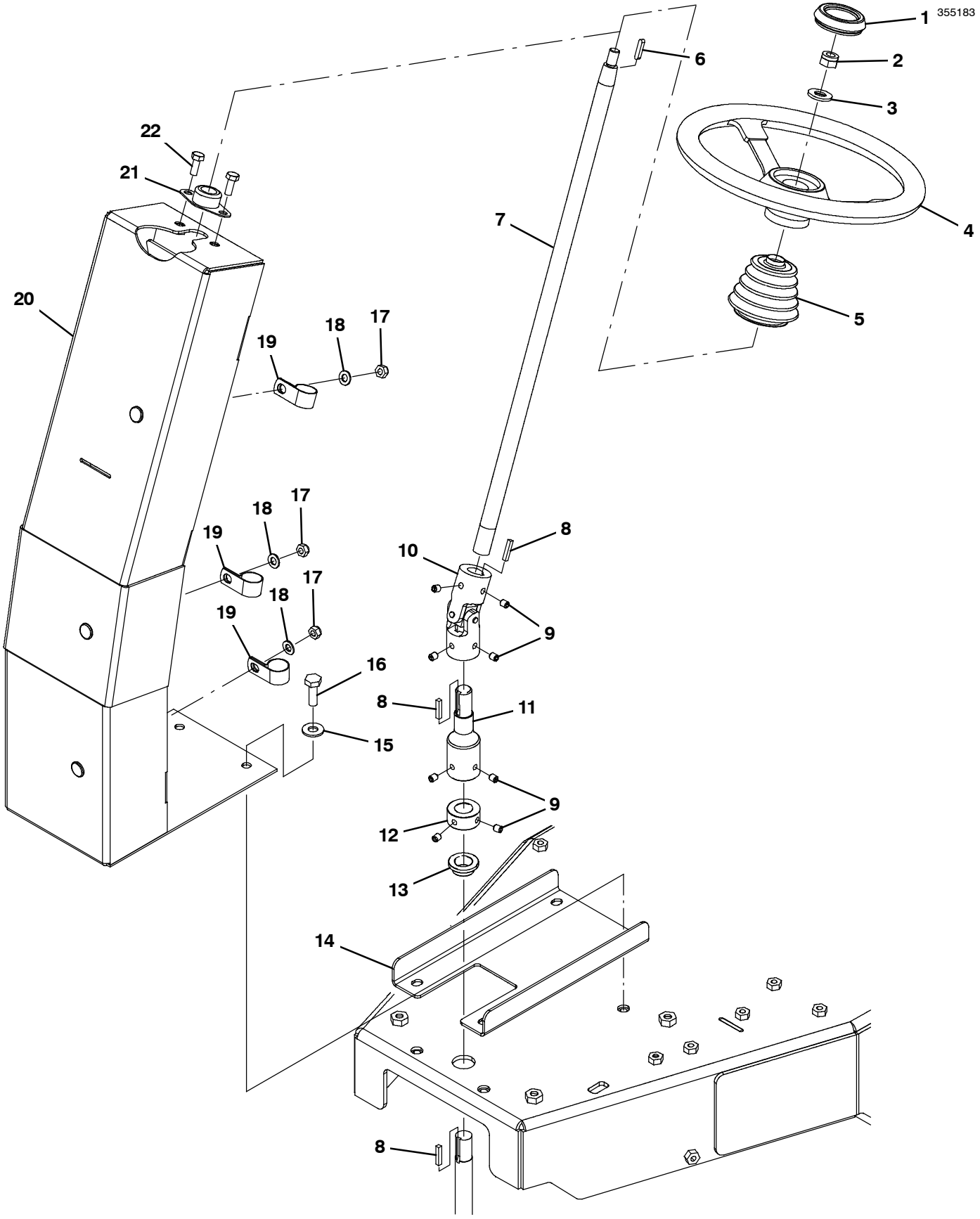

STEERING GROUP

Ref.	Part No.	Serial Number	Description	Qty.
1	1019706	(00000000-)	Cap, Wheel, Steering	1
2	08711	(00000000-)	Nut, Hex, Lock, M12 X 1.75, Nl	1
3	64154	(00000000-)	Washer, Flat, 0.53b 1.12d .11, Stl, Pl	1
4	1012002	(00000000-)	Wheel, Steering, 300mm	1
5	1012437	(00000000-)	Bellows, Shaft, Steering	1
6	1014328	(00000000-)	Key, Sq, 05mm X 05mm, 25mml	1
7	1013164	(00000000-)	Shaft, Steering, Wheel	1
8	00912	(00000000-)	Key, Sq, 0.19 X 0.19, 1.00l	3
9	46820	(00000000-)	Screw, Set, .31- 18 X 0.38, Nl	8
10	1040295	(00000000-)	Joint, U, 0.75id	1
11	1200662	(00000000-)	Shaft, Adapter, Steering	1
12	1202031	(00000000-)	Collar, Shaft, 20.4b X 18.0w, Clr Zn Pl	1
13	1202305	(00000000-)	Bushing, Flng, 20.0b 26.0d 12.0l, Bnz	1
14	1202861	(00000000-)	Plate, Stiffener, Steering Sppt [B10]	1
15	01686	(00000000-)	Washer, Flat, 0.44b 1.00d .08, Ss	4
16	09770	(00000000-)	Screw, Hex, M10 X 1.50 X 25, Nl, Ss	4
17	08713	(00000000-)	Nut, Hex, Lock, M8 X 1.25, Nl, Ss	3
18	01685	(00000000-)	Washer, Flat, 0.38b 0.88d .08, Ss	3
19	69234	(00000000-)	Clamp, Cable, Stl, 1.00d X 0.75w, 1hole	3
20	1018561	(00000000-)	Support Wldt, Steering	1
21	223065	(00000000-)	Bearing, Flng, 2hole, 0.75b [Nyl]	1
22	49826	(00000000-)	Screw, Hex, M8 X 1.25 X 16, Nl, Ss	2

INSTRUMENT PANEL GROUP

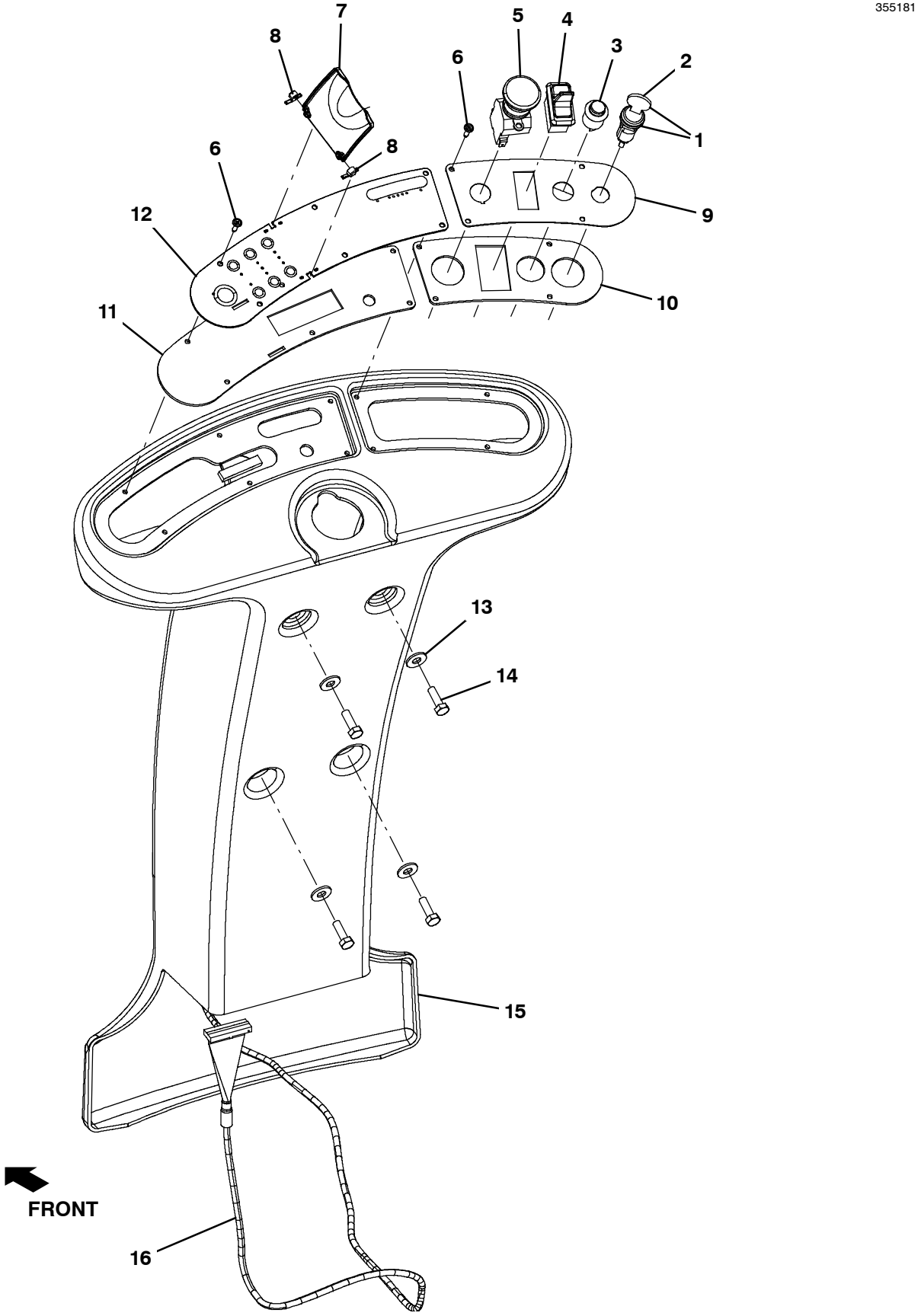

INSTRUMENT PANEL GROUP

	Ref.	Part No.	Serial Number	Description	Qty.
∇	1	1011402	(00000000-)	Switch, Key	1
▲	2	1017696	(00000000-)	Key Set, Replmt [F/ Keyswitch 1011402]	1
	3	1014832	(00000000-)	Switch, Horn	1
	4	1072040	(00000000-)	Switch, Rocker, Spst, Paddle	1
	5	1011735	(00000000-)	Switch, Safety, Shutoff	1
	6	72969	(00000000-)	Rivet, Plstc, .181d X 0.72	10
	7	1012197	(00000000-)	Cover, Panl, Instmt	1
	8	1011952	(00000000-)	Block, Pivot, Cover	2
	9	1046313	(00000000-)	Panel, Instmt, Rh	1
	10	1014080	(00000000-)	Gasket, Panl, Instmt, Rh, .13, Foam, Adh	1
	11	1052607	(00000000-)	Gasket, Panl, Instmt, Lh, .13, Foam, Adh	1
	12	1069937	(00000000-)	Panel, Instmt, Lh [Orion]	1
	13	01685	(00000000-)	Washer, Flat, 0.38b 0.88d .08, Ss	4
	14	12333	(00000000-)	Screw, Hex, M8 X 1.25 X 25, Ss, Nl	4
	15	9010994	(00000000-)	Column, Cntrl, Afmkt, Rm- Cptl (NA/AUS Models)	1
	15	1205689	(00000000-)	Column, Cntrl, Rm- Cptl, Trimmed [F/Badge (CE/KO Models)	1
	16	1016865	(00000000-)	Cable, Ribbon, 90.6l	1

∇ ASSEMBLY

▲ INCLUDED IN ASSEMBLY

FRONT DRIVE WHEEL GROUP

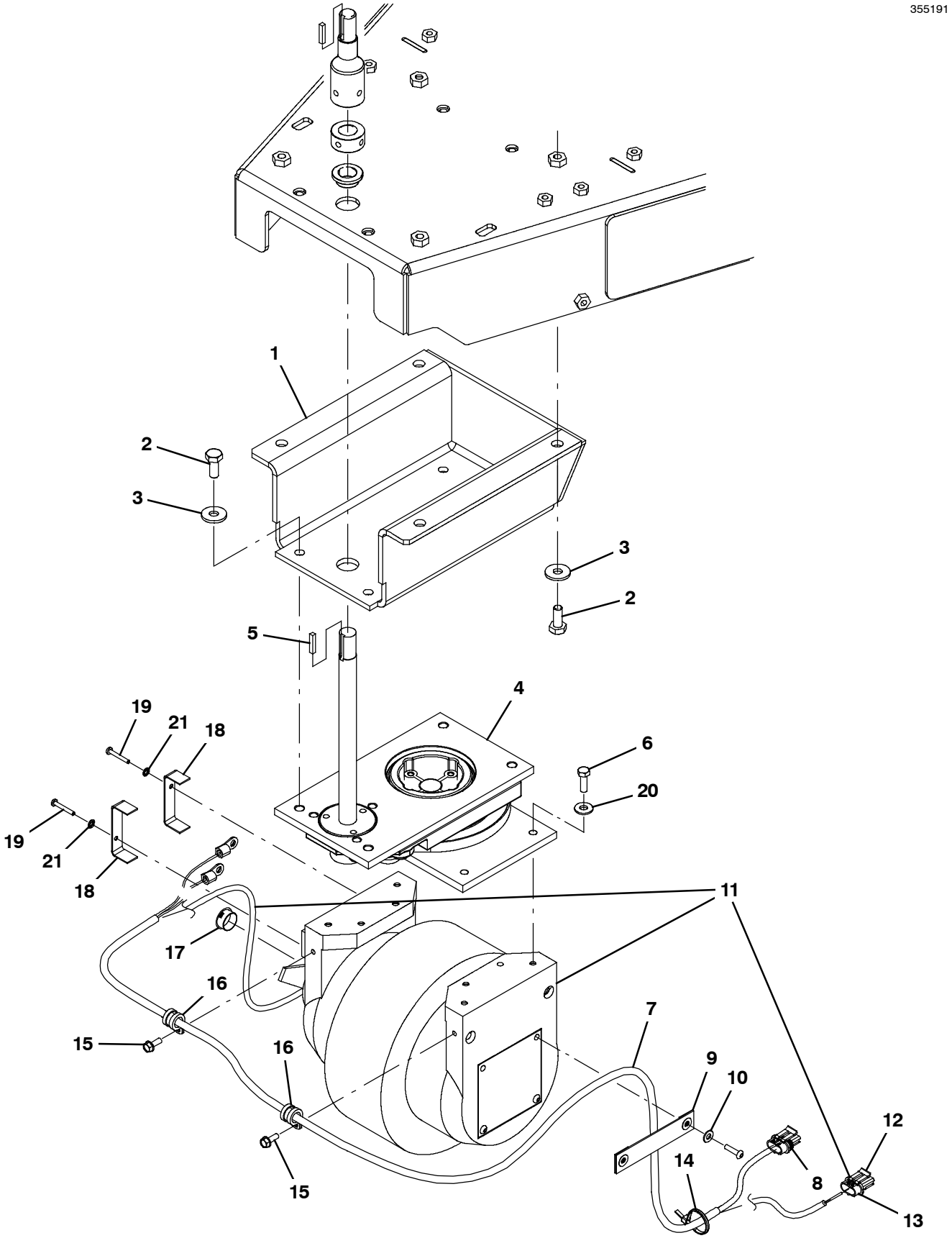

FRONT DRIVE WHEEL GROUP

	Ref.	Part No.	Serial Number	Description	Qty.
	1	1200717	(00000000-)	Bracket, Sppt, Power Wheel	1
	2	09770	(00000000-)	Screw, Hex, M10 X 1.50 X 25, Nl, Ss	8
	3	01686	(00000000-)	Washer, Flat, 0.44b 1.00d .08, Ss	8
	4	1019724	(00000000-)	Steer- Control Assy, Wheel Drive	1
	5	00912	(00000000-)	Key, Sq, 0.19 X 0.19, 1.00l	1
	6	12333	(00000000-)	Screw, Hex, M8 X 1.25 X 25, Ss, Nl	4
∇	7	1065808	(00000000-)	Harness, Motor, Brake [T7/Ssr]	1
▲	8	1047186	(00000000-)	Connector, Fem, 3 Recept [Mp630] (Assembly Only - No Breakdown Available)	1
	9	1019224	(00000000-)	Strap, Nyl	1
	10	19066	(00000000-)	Washer, Flat, 0.25b 0.56d .05, Pl, 10	1
∇	11	9008999	(00000000-)	Gearbox Kit, Wheel, 250mm, W/ Connector	1
▲		25837	(00000000-)	Terminal, Fem, Mp280, Sealed, 22- 20ga	2
▲		25830	(00000000-)	Seal, Wire, 18- 22ga [Wp / Mp280 Sealed]	2
▲	12	78950	(00000000-)	Connector, Fem, 2cav, Mp280 Sealed (Connector Only - No Assembly Available)	1
▲	13	78952	(00000000-)	Lock, Secondary, 2cav, Mp280 Sealed	1
	14	130773	(00000000-)	Tie, Cable, Nyl, 11.0l, .14w, 3.0 Max. D	4
	15	361339	(00000000-)	Screw, Hex, M6 X 1.00 X 16, Fmg	2
	16	1016354	(00000000-)	Clamp, Cable, Ss, 0.50d X 0.50w [Insul]	2
	17	130161	(00000000-)	Plug, Hole, Rnd, 0.88d, Blk	1
	18	1064972	(00000000-)	Bracket, Cord	2
	19	33931	(00000000-)	Screw, Pan, Phl, M4 X 0.70 X 30, Ss	2
	20	01685	(00000000-)	Washer, Flat, 0.38b 0.88d .08, Ss	2
	21	02938	(00000000-)	Washer, Lock, Int, 08, Ss	2

∇ ASSEMBLY

▲ INCLUDED IN ASSEMBLY

BRAKE AND ACCELERATOR PEDAL GROUP (S/N 10644214-)

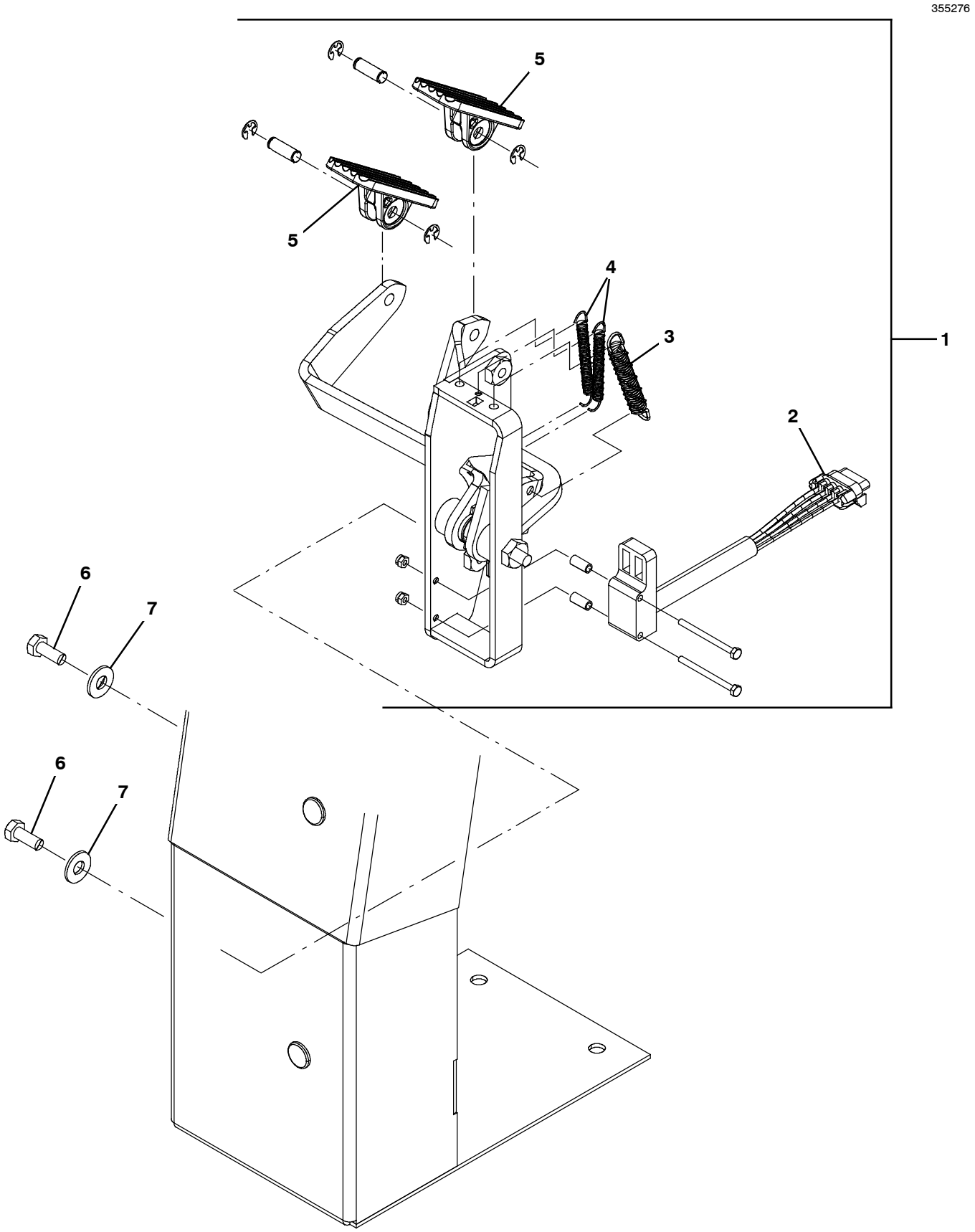

BRAKE AND ACCELERATOR PEDAL GROUP (S/N 10644214-)

	Ref.	Part No.	Serial Number	Description	Qty.
∇	1	1072477	(10644214-)	Pedal Assy, Accelerator, Brake	1
▲	2	1058687	(00000000-)	Vr, Sensor, Position [Hall]	1
▲	3	1031716	(00000000-)	Spring, Extn, 0.50od 0.07wir 03.0l	1
▲	4	1061049	(00000000-)	Vr, Spring, Extn, 0.35od 0.05wir 02.8l	2
▲	5	1072478	(10644214-)	Vr, Pedal, Foot, W/ Tread	1
	6	12273	(00000000-)	Screw, Hex, M8 X 1.25 X 20, Nl, Ss	2
	7	01685	(00000000-)	Washer, Flat, 0.38b 0.88d .08, Ss	2

∇ ASSEMBLY

▲ INCLUDED IN ASSEMBLY

BRAKE AND ACCELERATOR PEDAL GROUP (S/N 00000000- 10644213)

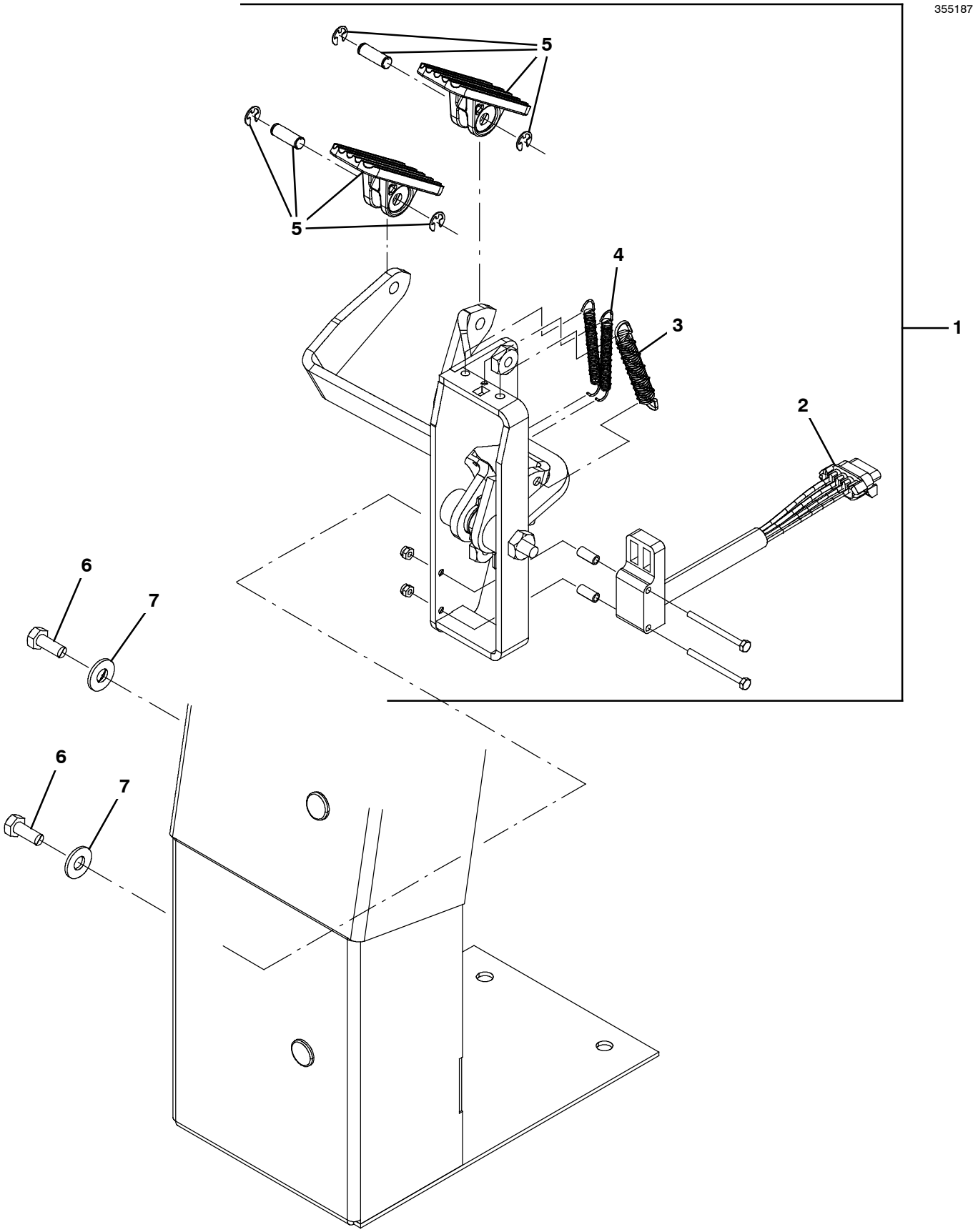

BRAKE AND ACCELERATOR PEDAL GROUP (S/N 00000000- 10644213)

	Ref.	Part No.	Serial Number	Description	Qty.
∇	1	9010657	(00000000- 10644213)	Pedal Assy Kit, Accelerator, Brake (Replaced by 1072477)	1
▲	2	1058687	(00000000-)	Vr, Sensor, Position [Hall]	1
▲	3	1031716	(00000000-)	Spring, Extn, 0.50od 0.07wir 03.0l	1
▲	4	1061049	(00000000-)	Vr, Spring, Extn, 0.35od 0.05wir 02.8l	2
▲	5	9010656	(00000000- 10644213)	Pedal Kit, Accelerator, Brake (Replaced by 1072478)	1
	6	12273	(00000000-)	Screw, Hex, M8 X 1.25 X 20, Nl, Ss	2
	7	01685	(00000000-)	Washer, Flat, 0.38b 0.88d .08, Ss	2

∇ ASSEMBLY

▲ INCLUDED IN ASSEMBLY

HEAD LIFT GROUP

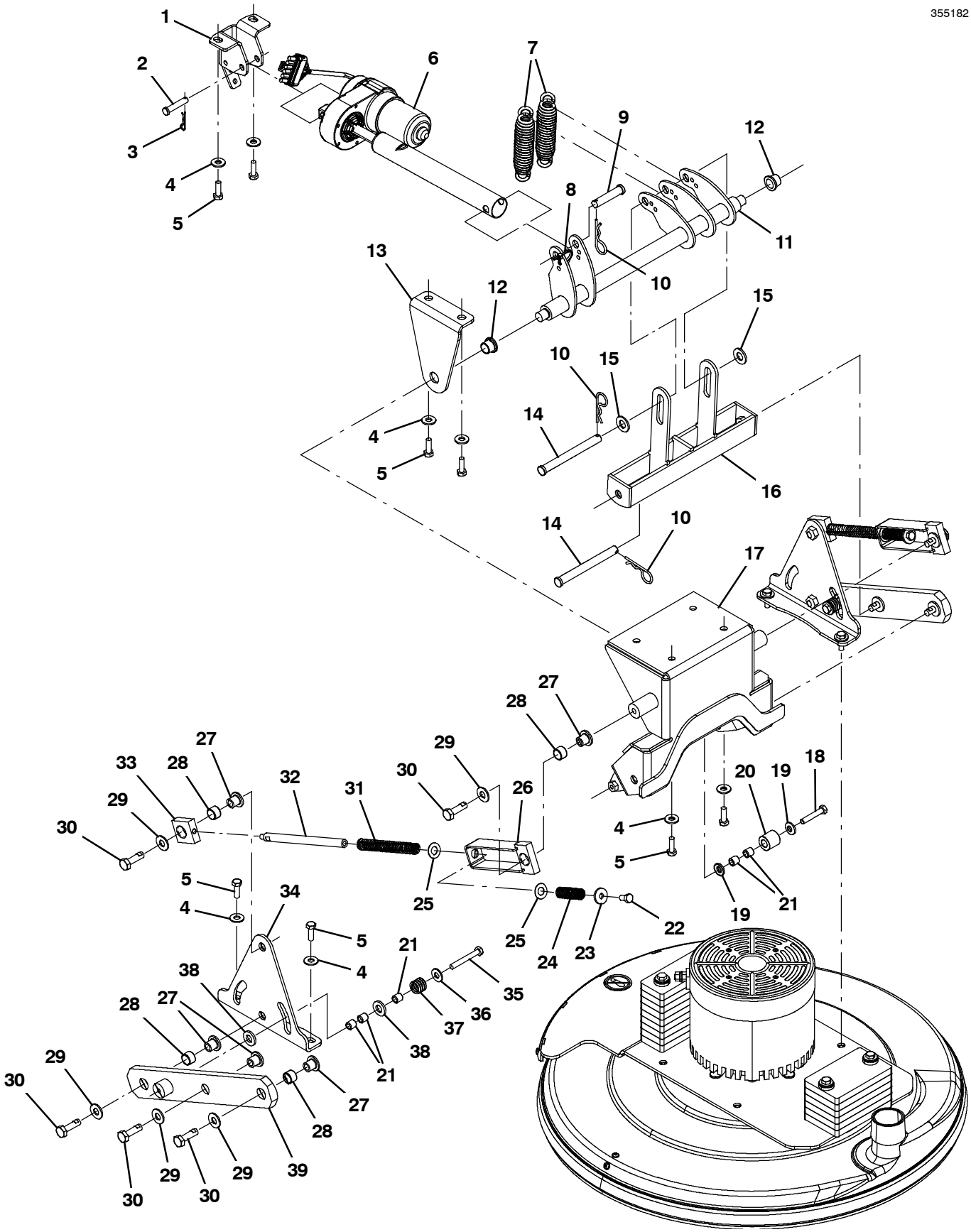

HEAD LIFT GROUP

Ref.	Part No.	Serial Number	Description	Qty.
1	1200818	(00000000-)	Bracket, Mtg, Actuator	1
2	17461	(00000000-)	Pin, Clevis, 0.37d X 1.75l	1
3	86866	(00000000-)	Pin, Cotter, Hair, 0.38d .072 Wir	1
4	01685	(00000000-)	Washer, Flat, 0.38b 0.88d .08, Ss	12
5	12333	(00000000-)	Screw, Hex, M8 X 1.25 X 25, Ss, Nl	12
6	9014886	(00000000-)	Actuator Kit, Install, Afmkt [B10]	1
7	1205672	(00000000-)	Spring, Extn, 1.211od 0.200wir 05.5l	2
8	130773	(00000000-)	Tie, Cable, Nyl, 11.0l, .14w, 3.0 Max. D	1
9	11211	(00000000-)	Pin, Clevis, 0.50d X 2.25l	1
10	02942	(00000000-)	Pin, Hair, Cotter, 0.62d .120 Wir	3
11	1200702	(00000000-)	Bracket, Wldt, Bellcrank	1
12	1202188	(00000000-)	Bushing, Flng, 0.63b 0.75d 0.63l, Bnz	2
13	1200731	(00000000-)	Bracket, Mount, Pivot	1
14	51538	(00000000-)	Pin, Clevis, 0.50d X 5.00l	2
15	32486	(00000000-)	Washer Flat,0.50,Sae	2
16	1201192	(00000000-)	Actuator, Lift Wldt, Linkage	1
17	1200950	(00000000-)	Bracket Wldt, Main, Linkage	1
18	1203909	(00000000-)	Screw, Hex, M8 X 1.25 X 45, Ss, Nl	2
19	41186	(00000000-)	Washer, Flat, Belleville, .31	4
20	1014020	(00000000-)	Roller, Lift, Dual Disk Head	2
21	222460	(00000000-)	Sleeve, P/M, 0.32b 0.50d 0.5l [430ss]	10
22	49826	(00000000-)	Screw, Hex, M8 X 1.25 X 16, Nl, Ss	2
23	1017218	(00000000-)	Washer, Flat, 0.32b 1.00d .12, Ss	2
24	1202820	(00000000-)	Spring, Comp, 0.520b, 3.95l	2
25	20536- 2	(00000000-)	Washer, Flat, 0.50b 1.00d .03, Nyl	4
26	1202401	(00000000-)	Arm Wldt, Upper, 4bar	2
27	1202539	(00000000-)	Bushing, Flng, Ss, 0.404b 0.612d 0.674l	10
28	1202378	(00000000-)	Bushing, 0.63b 0.75d 0.50l, Bnz	8
29	01686	(00000000-)	Washer, Flat, 0.44b 1.00d .08, Ss	10
30	1202948	(00000000-)	Screw, Hex, M10 X 1.50 X 35, Ss, Nl	10
31	1202821	(00000000-)	Spring, Comp, 0.520b, 6.5l	2
32	1202454	(00000000-)	Rod, Guide, Spring	2
33	1200628	(00000000-)	Spring, Knuckle, Guide	2
34	1202300	(00000000-)	Plate Wldt, Pivot, Head	2
35	1014163	(00000000-)	Screw, Hex, M8 X 1.25 X 60, Fl, Ss	2
36	01685	(00000000-)	Washer, Flat, 0.38b 0.88d .08, Ss	2
37	1202544	(00000000-)	Spring, Comp, 0.550id, 0.120wir, 0.850l	2
38	140127	(00000000-)	Washer, Thrust, 0.51b 1.00d 0.12w, Brz	4
39	1205904	(00000000-)	Arm Wldt, Lower 4bar Link	2

MAIN HOUSING GROUP

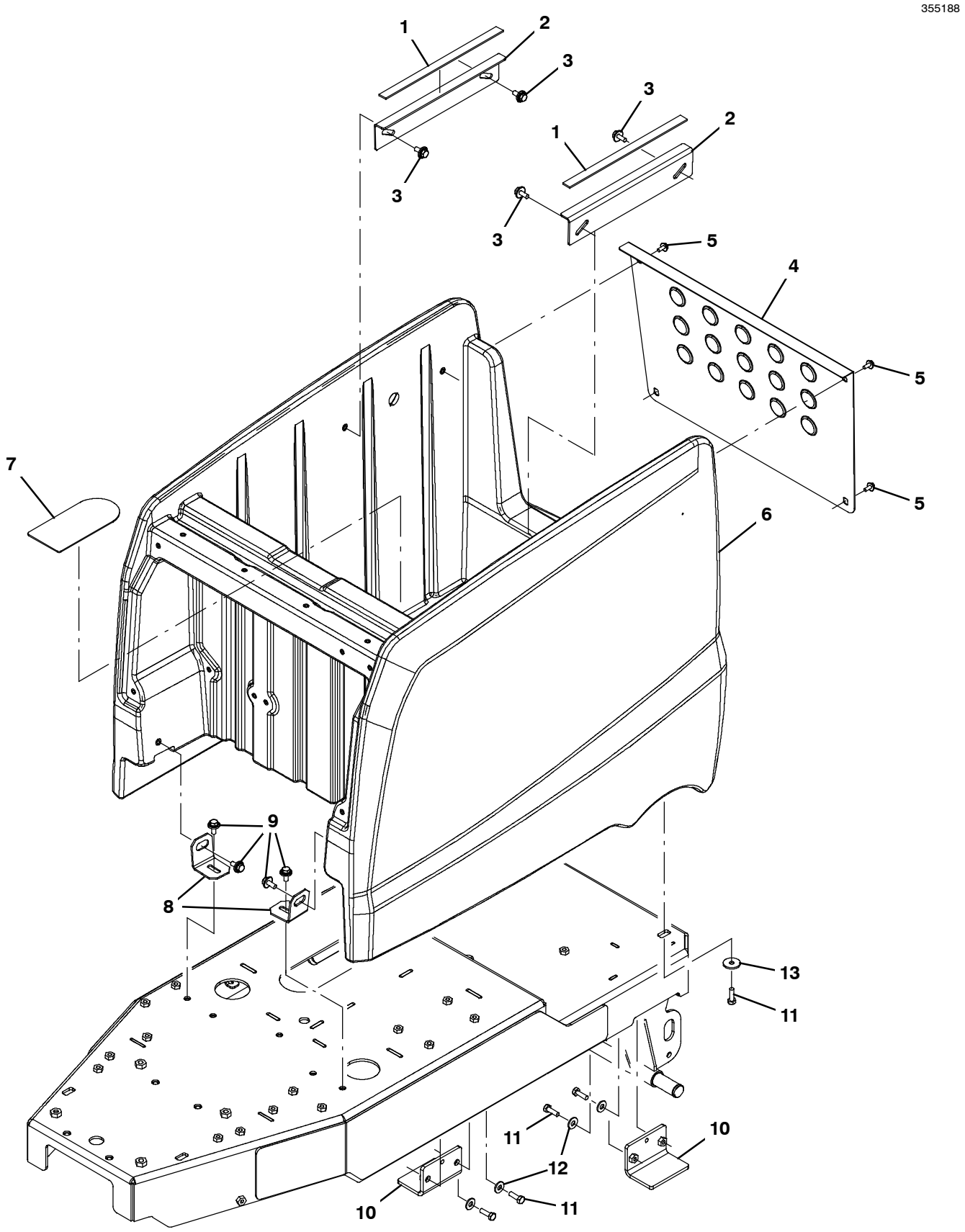

MAIN HOUSING GROUP

Ref.	Part No.	Serial Number	Description	Qty.
1	1202128	(00000000-)	Pad, Rbr, 0.12 X 0.7 X 12.0, Adh	2
2	1201264	(00000000-)	Bracket, Spprt, Seat	2
3	1020341	(00000000-)	Screw, Hex, M8 X 1.25 X 20, Ss, Sems	4
4	1200942	(00000000-)	Panel, Access, Battery	1
5	1034731	(00000000-)	Screw, Hex, M6 X 1.00 X 16, Sems, Ss	4
6	1201326	(00000000-)	Body, Rear, Rm- Tl, Trimmed, Rider Brnshr (NA/AUS/KO Models)	1
6	9010996	(00000000-)	Body, Rear, Afmkt, On- Brd Chgr, Rm- Tl Ce (CE Models)	1
7	1202377	(00000000-)	Cover, Motor	1
8	1014072	(00000000-)	Bracket, Mtg, Tank	2
9	1020341	(00000000-)	Screw, Hex, M8 X 1.25 X 20, Ss, Sems	4
10	1202404	(00000000-)	Bracket Assy, Arm, Sppt,	2
11	12333	(00000000-)	Screw, Hex, M8 X 1.25 X 25, Ss, Nl	6
12	01685	(00000000-)	Washer, Flat, 0.38b 0.88d .08, Ss	4
13	1016331	(00000000-)	Washer, Flat, 0.34b 1.25d .11, Ss	2

FRONT SHROUD GROUP

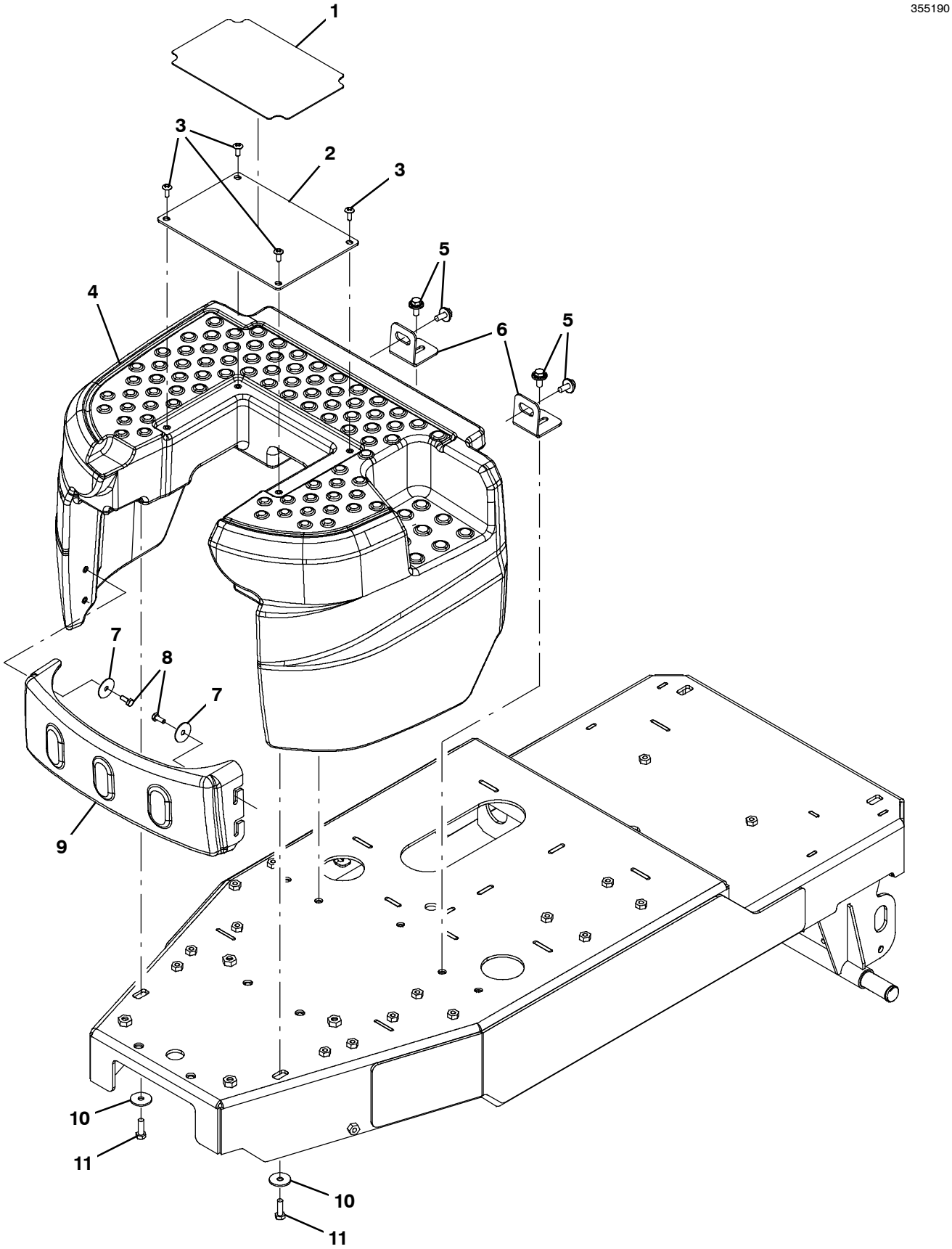

FRONT SHROUD GROUP

Ref.	Part No.	Serial Number	Description	Qty.
1	1201772	(00000000-)	Tread, Non- Skid, Cover	1
2	1200553	(00000000-)	Cover, Access, Bolt	1
3	1202143	(00000000-)	Screw, Trs, M6 X 1.00 X 16, Phl, Nl, Blk	4
4	1201702	(00000000-)	Shroud, Front, Rm- Tl, Rdr Brnshr	1
5	1020341	(00000000-)	Screw, Hex, M8 X 1.25 X 20, Ss, Sems	4
6	1202258	(00000000-)	Bracket, Mtg, Tank	2
7	41178	(00000000-)	Washer, Flat, 0.25, Fendr	4
8	11329	(00000000-)	Screw, Hex, M6 X 1.00 X 16, Nl, Ss	4
9	1201371	(00000000-)	Cover, Wheel, Drive	1
10	1016331	(00000000-)	Washer, Flat, 0.34b 1.25d .11, Ss	2
11	12333	(00000000-)	Screw, Hex, M8 X 1.25 X 25, Ss, Nl	2

ELECTRICAL PANEL GROUP

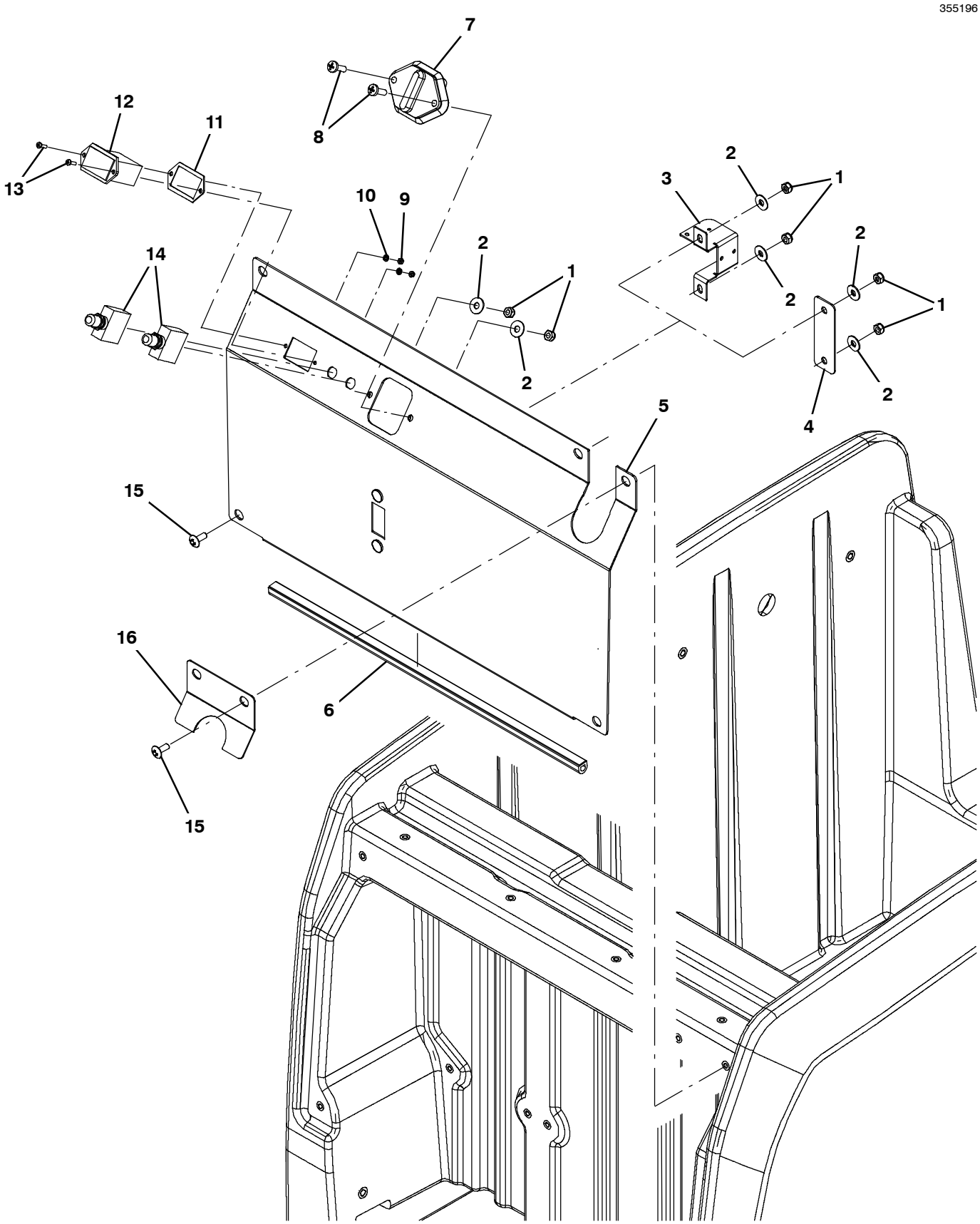

ELECTRICAL PANEL GROUP

Ref.	Part No.	Serial Number	Description	Qty.
1	08712	(00000000-)	Nut, Hex, Lock, M6 X 1.00, Nl, Ss	4
2	01684	(00000000-)	Washer, Flat, 0.27b 0.69d .05, Ss	4
3	1200885	(00000000-)	Bracket, Connector, Plug (Models w/ Off- Board Charger)	1
4	1202117	(00000000-)	Cover, Chrgr, Panel, Ele (Models w/ On- Board Charger)	1
5	1201337	(00000000-)	Panel Wldt, Access, Ele (NA Models)	1
5	9010998	(00000000-)	Panel, Access, Afmkt [Ce/Korea/Aus]	1
6	9010997	(00000000-)	Seal, Bulb, Afmkt, 24 In (Bulk #578303000)	1
7	1204520	(00000000-)	Circuitbreaker, 150a, Panel	1
8	1065954	(00000000-)	Screw, Pan, Phl, M6 X 1.0 X 20, Blk	2
9	579211	(00000000-)	Nut, Hex, Lock, M3 X 0.50, Nl, Ss	2
10	39658	(00000000-)	Washer, Lock, Int, 04	2
11	222683	(00000000-)	Gasket, Hourmeter	1
12	377433	(00000000-)	Gauge, Hourmeter, 12- 60vdc, Analog [10k]	1
13	1069314	(00000000-)	Screw, Pan, Phl, M3 X 0.50 X 12, Blk	2
14	383720	(00000000-)	Circuitbreaker, 05.0a, Resetable	2
15	1202143	(00000000-)	Screw, Trs, M6 X 1.00 X 16, Phl, Nl, Blk	5
16	1202116	(00000000-)	Bracket, Hose, Vacuum	1

ELECTRICAL COMPONENTS GROUP

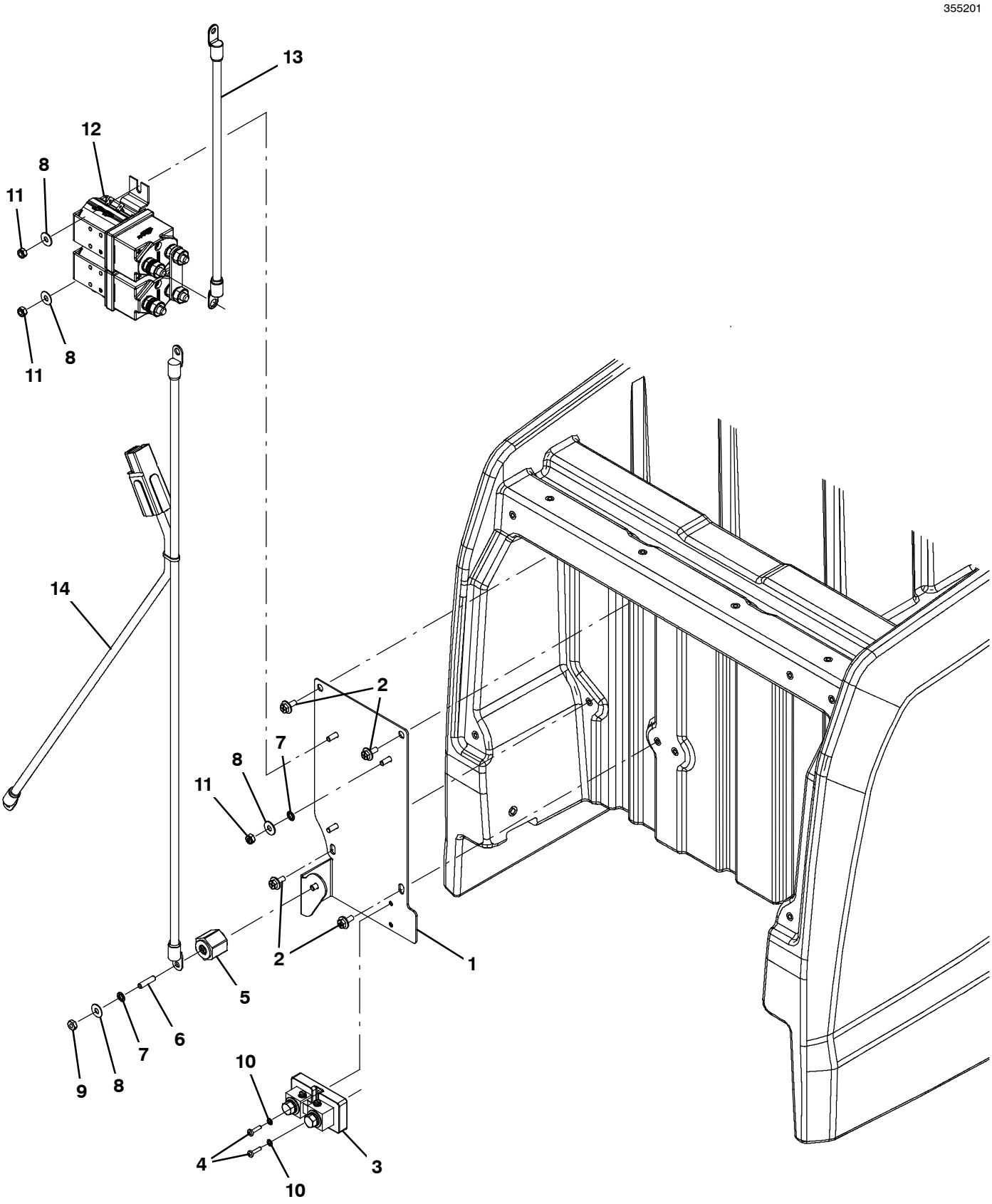

ELECTRICAL COMPONENTS GROUP

Ref.	Part No.	Serial Number	Description	Qty.
1	1201292	(00000000-)	Panel Wldt, Component, Ele	1
2	1034731	(00000000-)	Screw, Hex, M6 X 1.00 X 16, Ss, Sems	4
3	1200585	(00000000-)	Shunt, Current, 200a	1
4	24265	(00000000-)	Screw, Pan, Phl, M4 X 0.70 X 16, Ss	2
5	76062	(00000000-)	Stand- Off, Wir, 0.25, Insulator, Panel	1
6	41702	(00000000-)	Rod, Thrd, Full, .25- 20 01.5l	1
7	07515	(00000000-)	Washer, Lock, Int, 0.25, Ss	2
8	01684	(00000000-)	Washer, Flat, 0.27b 0.69d .05, Ss	4
9	32520	(00000000-)	Nut, Hex, Jam, .25- 20	1
10	02938	(00000000-)	Washer, Lock, Int, 08, Ss	2
11	08712	(00000000-)	Nut, Hex, Lock, M6 X 1.00, Nl, Ss	3
12	1203357	(00000000-)	Contactor Assy, 36vdc, 250a, Spst, No	1
13	1201381	(00000000-)	Wire, Assy, Cable 16.0 2awg, Red	1
14	1201383	(00000000-)	Harness, Battery, Orion	1

CIRCUITBOARD GROUP

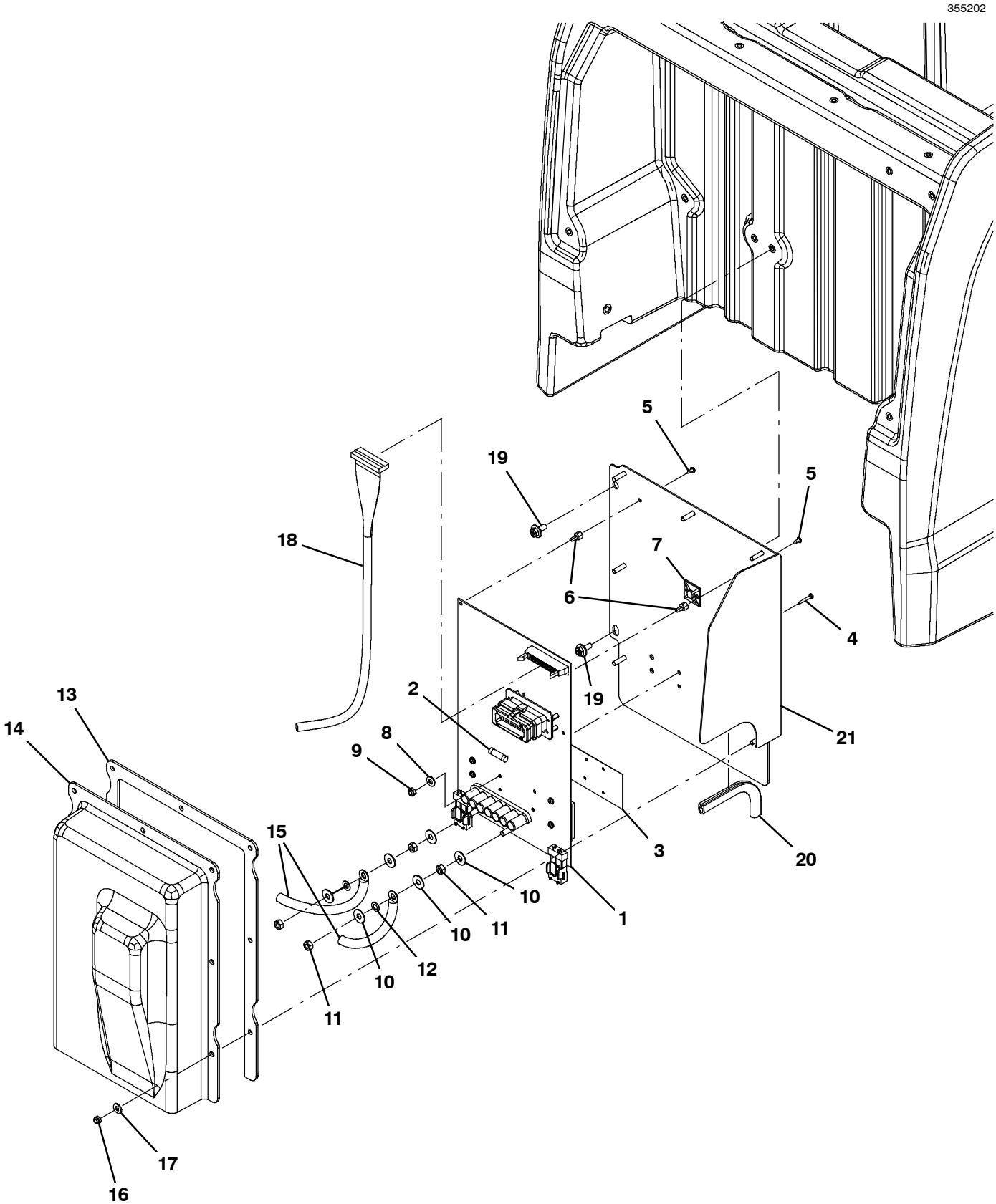

CIRCUITBOARD GROUP

	Ref.	Part No.	Serial Number	Description	Qty.
∇	1	9011014	(00000000-)	Circuitboard Kit, Afmkt	1
▲	2	1030692	(00000000-)	Vr, Fuse, 15a, Replmt	1
▲	3	1016816	(00000000-)	Pad, Thermal, Heat Sink	1
	4	06922	(00000000-)	Screw, Pan, Phl, M3 X 0.50 X 20, 4.8	4
	5	3701.6	(00000000-)	Screw, Pan, Phl, 06- 32 X 0.38, Shtmtl,Ss	2
	6	1016825	(00000000-)	Support, Circuitboard	2
	7	55248	(00000000-)	Mount, Cable Tie	1
	8	1019218	(00000000-)	Washer, Flat, 0.14b 0.31d .03, Nyl	4
	9	579211	(00000000-)	Nut, Hex, Lock, M3 X 0.50, Nl, Ss	4
	10	01684	(00000000-)	Washer, Flat, 0.27b 0.69d .05, Ss	6
	11	07785	(00000000-)	Nut, Hex, Std, M6 X 1.00, Ss	4
	12	32982	(00000000-)	Washer, Lock, Int, 0.25	2
	13	1201152	(00000000-)	Seal, Rbr, Adh	1
	14	9010999	(00000000-)	Cover, Circuitboard, Afmkt	1
	15	1070076	(00000000-)	Harness, Control Board [Orion]	1
	16	09739	(00000000-)	Nut, Hex, Lock, M5 X 0.80, Nl, Ss	7
	17	01683	(00000000-)	Washer, Flat, 10, Ss	7
	18	1016865	(00000000-)	Cable, Ribbon, 90.6l	1
	19	1034731	(00000000-)	Screw, Hex, M6 X 1.00 X 16, Ss, Sems	4
	20	1020168	(00000000-)	Molding, Afmkt, Trim, Pvc, .08 .11, 01ft	1
	21	1201311	(00000000-)	Panel Wldt, Circuitboard	1

∇ ASSEMBLY

▲ INCLUDED IN ASSEMBLY

ACTIVE DUST CONTROL GROUP

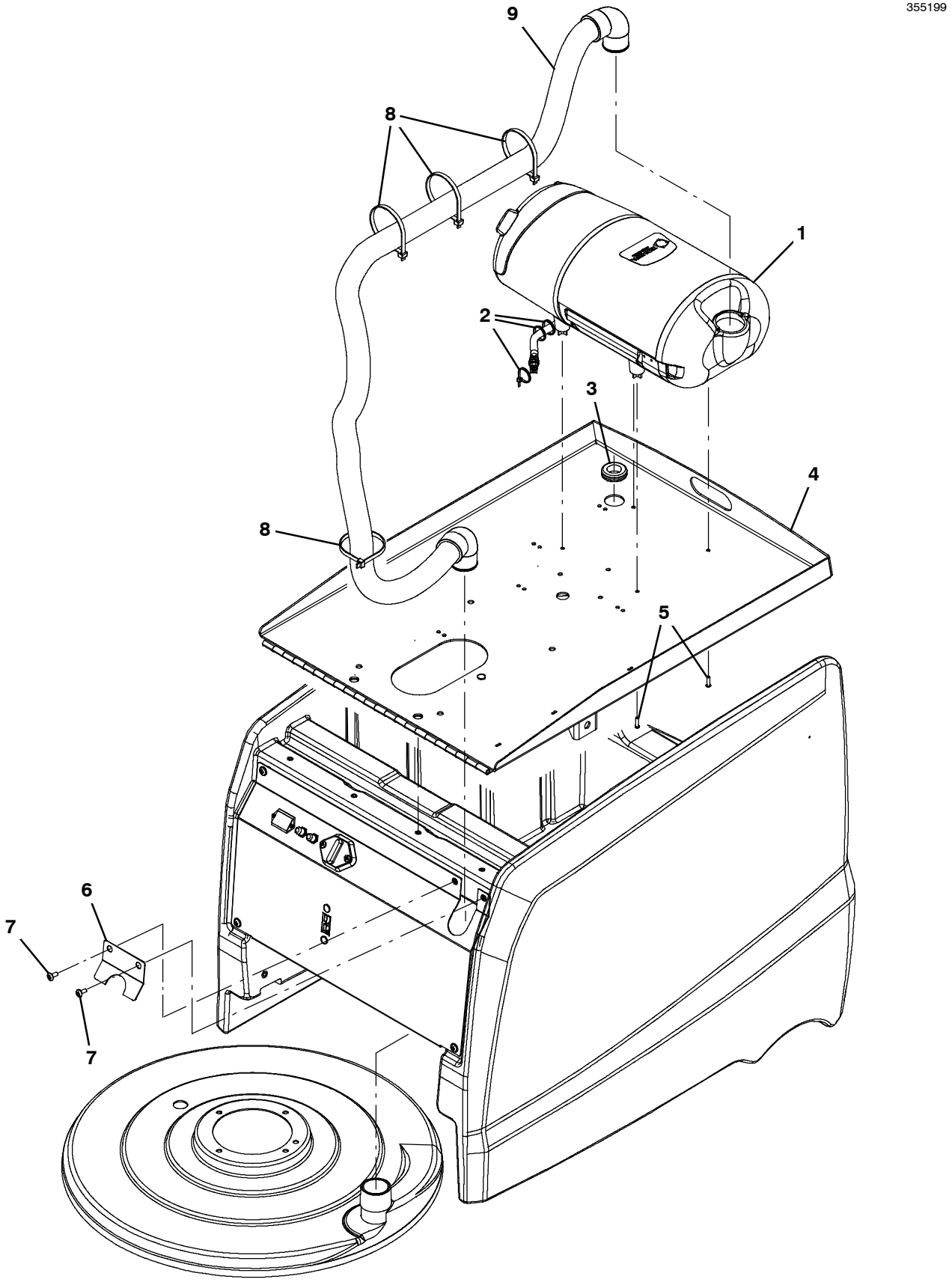

ACTIVE DUST CONTROL GROUP

Ref.	Part No.	Serial Number	Description	Qty.
1	1200929	(00000000-)	Vacuum, Recvy, Dust (See Breakdown)	1
2	130773	(00000000-)	Tie, Cable, Nyl, 11.0l, .14w, 3.0 Max. D	3
3	10632- 14	(00000000-)	Grommet, Rbr, 1.00id, F/1.4h, .12 Matl	1
4	9010990	(00000000-)	Plate, Seat, Afmkt, Adc [B10] [Na/Aus]	1
4	9010991	(00000000-)	Plate, Seat, Afmkt, Adc [B10] [Ce/Korea]	1
5	360943	(00000000-)	Screw, Pan, Phl, 10- 14 X 0.75, F/ Plstc	4
6	1202116	(00000000-)	Bracket, Hose, Vacuum	1
7	1202143	(00000000-)	Screw, Trs, M6 X 1.00 X 16, Phl, Nl, Blk	2
8	44961	(00000000-)	Tie, Cable, Nyl, 14.5l .30w 4.0 Max D	4
9	1201536	(00000000-)	Hose Assy, Vac, 1.50id, 2 Cuff, E90	1

BATTERY GROUP, WET 435AH

355206

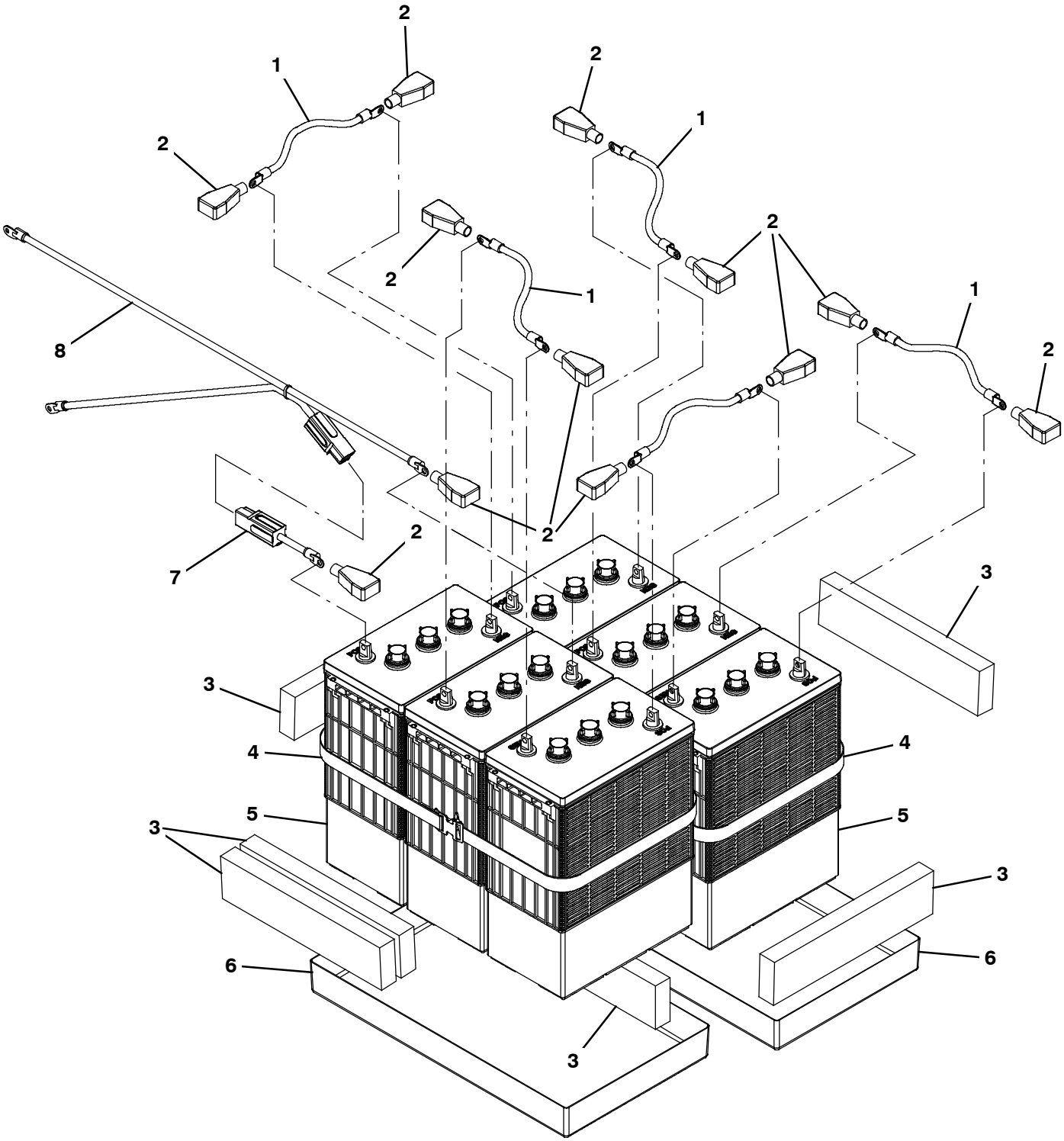

BATTERY GROUP, WET 435AH

Ref.	Part No.	Serial Number	Description	Qty.
1	59996	(00000000-)	Cable, 02ga 13.0l Blk .34ring /.34ring	5
2	1205540	(00000000-)	Boot, Terminal, Battery, 1/0- 2/0ga, Blk	12
3	630375	(00000000-)	Spacer, Battery, Foam, 1.25 X 3.3 X 13.7	6
4	222682	(00000000-)	Strap, Poly, Webbing 1.0 X 100.0	2
5	1204146	(00000000-)	Battery, Wet, 06vdc 435ah, W/ Box (Includes Hardware)	6
6	1200734	(00000000-)	Tray, Battery [Orion]	2
7	1205990	(00000000-)	Cable Assy, 02ga Red, .31ring/Pp180	1
8	1201383	(00000000-)	Harness, Battery, Orion	1

ON-BOARD CHARGER GROUP

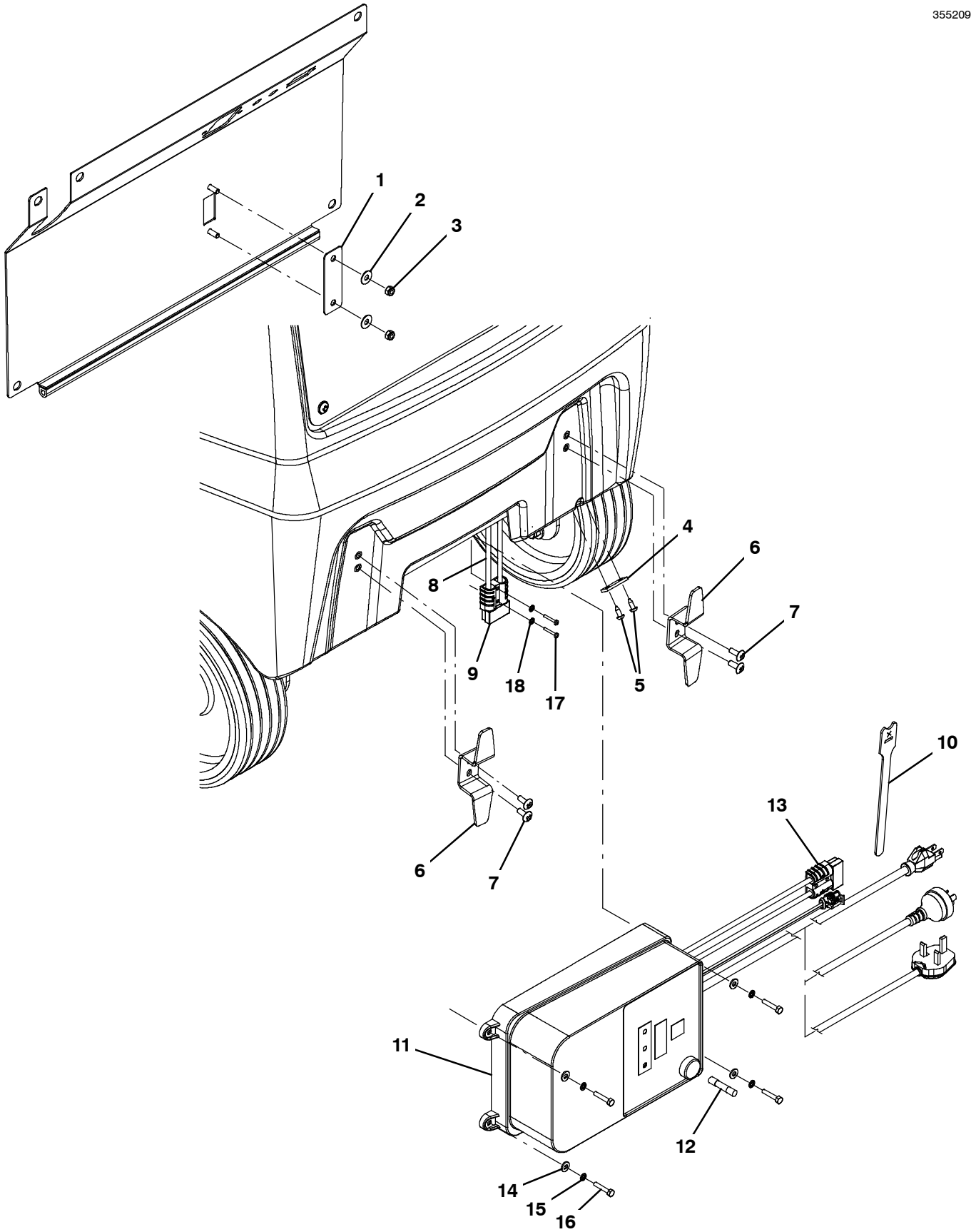

ON- BOARD CHARGER GROUP

	Ref.	Part No.	Serial Number	Description	Qty.
	1	1202117	(00000000-)	Cover, Chrgr, Panel, Ele	1
	2	01684	(00000000-)	Washer, Flat, 0.27b 0.69d .05, Ss	2
	3	08712	(00000000-)	Nut, Hex, Lock, M6 X 1.00, Nl, Ss	2
	4	600168	(00000000-)	Plate, Clamp, Strap	1
	5	1009324	(00000000-)	Screw, Pan, Phl, 10- 16 X 0.50,Blk[Typ17]	2
	6	1202266	(00000000-)	Hook, Cord, Dbl	2
	7	1202143	(00000000-)	Screw, Trs, M6 X 1.00 X 16, Phl, Nl, Blk	4
∇	8	1201394	(00000000-)	Harness, Charger, On Board [Orion]	1
▲	9	130155	(00000000-)	Connector, Battery, 6ga 50a, Gray[2cont]	1
	10	1067526	(00000000-)	Fastener, 8.0l [Hook And Loop]	1
∇	11	9011001	(00000000-)	Charger Kit, 36vdc 120vac, On- Brd, [Na]	1
▲	12	1206662	(00000000-)	Fuse, 015a, 250vac [Baf- 15]	1
▲	13	130155	(00000000-)	Connector, Battery, 6ga 50a, Gray[2cont]	1
∇	11	9011002	(00000000-)	Charger Kit, 36vdc 230vac, On- Brd, [Aus]	1
▲	12	1206662	(00000000-)	Fuse, 015a, 250vac [Baf- 15]	1
▲	13	130155	(00000000-)	Connector, Battery, 6ga 50a, Gray[2cont]	1
∇	11	9011003	(00000000-)	Charger Kit, 36vdc 230vac, On- Brd, [Uk]	1
▲	12	1206662	(00000000-)	Fuse, 015a, 250vac [Baf- 15]	1
▲	13	130155	(00000000-)	Connector, Battery, 6ga 50a, Gray[2cont]	1
	14	01683	(00000000-)	Washer, Flat, 10, Ss	4
	15	07514	(00000000-)	Washer, Lock, Int, 10, Ss	4
	16	12316	(00000000-)	Screw, Hex, M5 X 0.80 X 25, Ss	4
	17	06922	(00000000-)	Screw, Pan, Phl, M3 X 0.50 X 20, 4.8	2
	18	140019	(00000000-)	Washer, Lock, Ext, 06	2

∇ ASSEMBLY

▲ INCLUDED IN ASSEMBLY

LABEL GROUP

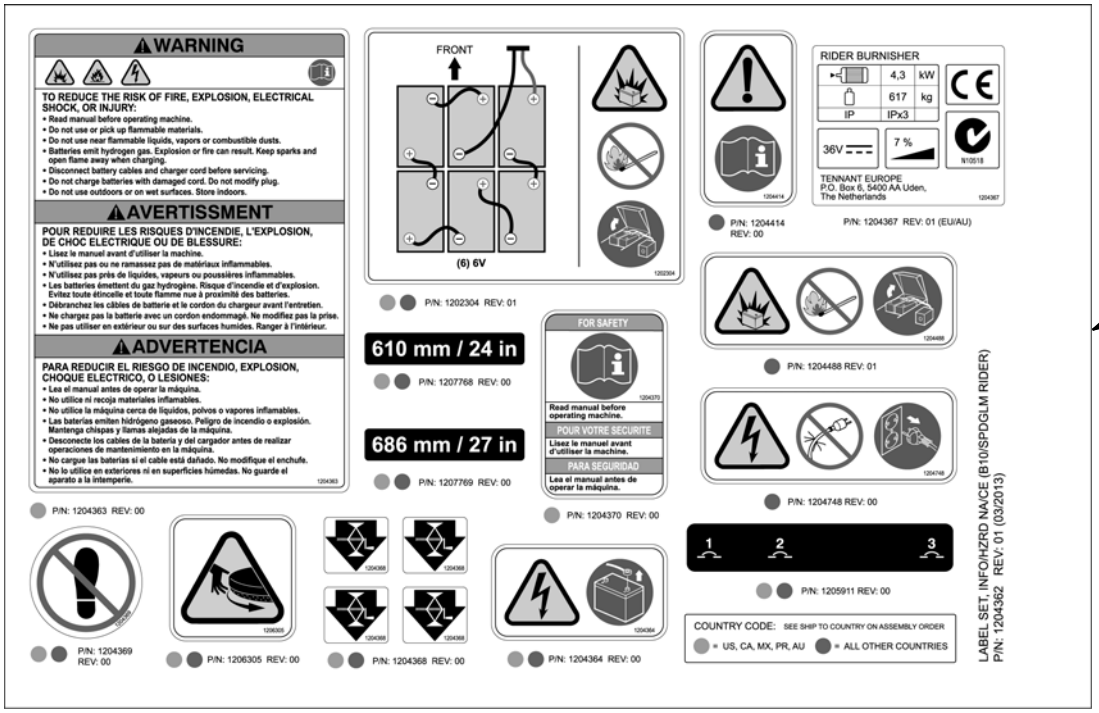
WARNING
TO REDUCE THE RISK OF FIRE, EXPLOSION, ELECTRICAL SHOCK, OR INJURY:
• Read manual before operating machine.
• Do not use or pick up flammable materials.
• Do not use near flammable liquids, vapors or combustible dusts.
• Batteries emit hydrogen gas. Explosion or fire can result. Keep sparks and open flame away when charging.
• Disconnect battery cables and charger cord before servicing.
• Do not charge batteries with damaged cord. Do not modify plug.
• Do not use outdoors or on wet surfaces. Store indoors.
AVERTISSMENT
POUR REDUIRE LES RISQUES D'INCENDIE, L'EXPLOSION, DE CHOC ELECTRIQUE OU DE BLESSURE:
• Lisez le manuel avant d'utiliser la machine.
• N'utilisez pas ou ne ramassez pas de matériaux inflammables.
• N'utilisez pas près de liquides, vapeurs ou poussières inflammables.
• Les batteries émettent du gaz hydrogène. Risque d'incendie et d'explosion. Évitez toute étincelle et toute flamme nue à proximité des batteries.
• Débranchez les câbles de batterie et le cordon du chargeur avant l'entretien.
• Ne chargez pas la batterie avec un cordon endommagé. Ne modifiez pas la prise.
• Ne pas utiliser en extérieur ou sur des surfaces humides. Ranger à l'intérieur.
ADVERTENCIA
PARA REDUCIR EL RIESGO DE INCENDIO, EXPLOSION, CHOQUE ELECTRICO, O LESIONES:
• Lea el manual antes de operar la máquina.
• No utilice ni recoja materiales inflamables.
• No utilice la máquina cerca de líquidos, polvos o vapores inflamables.
• Las baterías emiten hidrógeno gaseoso. Peligro de incendio o explosión. Mantenga chispas y llamas alejadas de la máquina.
• Desconecte los cables de la batería y del cargador antes de realizar operaciones de mantenimiento en la máquina.
• No cargue las baterías si el cable está dañado. No modifique el enchufe.
• No lo utilice en exteriores ni en superficies húmedas. No guarde el aparato a la intemperie.
P/N: 1204363 REV: 00
P/N: 1204369 REV: 00
P/N: 1206305 REV: 00
P/N: 1204368 REV: 00
FRONT
(6) 6V
P/N: 1202304 REV: 01
610 mm / 24 in
P/N: 1207768 REV: 00
686 mm / 27 in
P/N: 1207769 REV: 00
FOR SAFETY
Read manual before operating machine.
POUR VOTRE SECURITE
Lisez le manuel avant d'utiliser la machine.
PARA SEGURIDAD
Lea el manual antes de operar la máquina.
P/N: 1204370 REV: 00
P/N: 1204364 REV: 00
P/N: 1204414 REV: 00
RIDER BURNISHER
4,3 kW
617 kg
IP IPx3
36V
7 %
TENNANT EUROPE
P.O. Box 6, 5400 AA Uden, The Netherlands
P/N: 1204367 REV: 01 (EU/AU)
P/N: 1204488 REV: 01
P/N: 1204748 REV: 00
1 2 3
P/N: 1205911 REV: 00
COUNTRY CODE: SEE SHIP TO COUNTRY ON ASSEMBLY ORDER
= US, CA, MX, PR, AU
= ALL OTHER COUNTRIES
LABEL SET, INFO/HZRD NA/CE (B10/SPDGLM RIDER)
P/N: 1204362 REV: 01 (03/2013)
1

B10
2

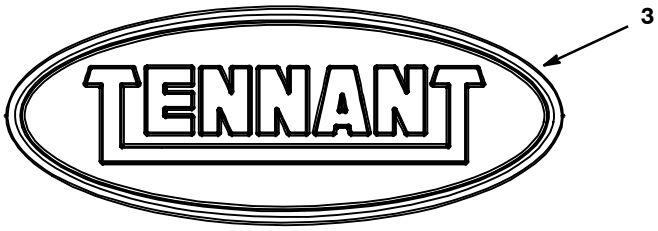
TENNANT
3

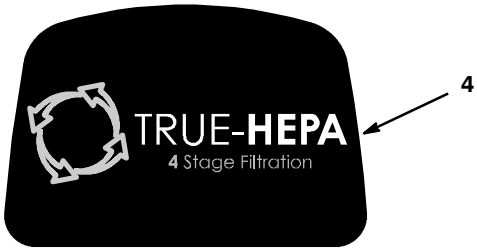
TRUE-HEPA
4 Stage Filtration
4

LABEL GROUP

Ref.	Part No.	Serial Number		Description	Qty.
1	1204362	(00000000-	)	Label, Set, Info/Hzrd [Na/Ce] [B10]	1
2	1202133	(00000000-	)	Label, Model, B10	2
3	1213114	(MAR2021-	)	Label, Logo, 05.5l, Blk/Sil [Tennant]	1
3	1205477	(00000000- FEB2021	)	Nameplate, Tennant, Dome, 5.5in (Replaced By 1213114)	1
4	1205356	(00000000-	)	Label, True- Hepa [Filtration]	1

ELECTRICAL SCHEMATIC

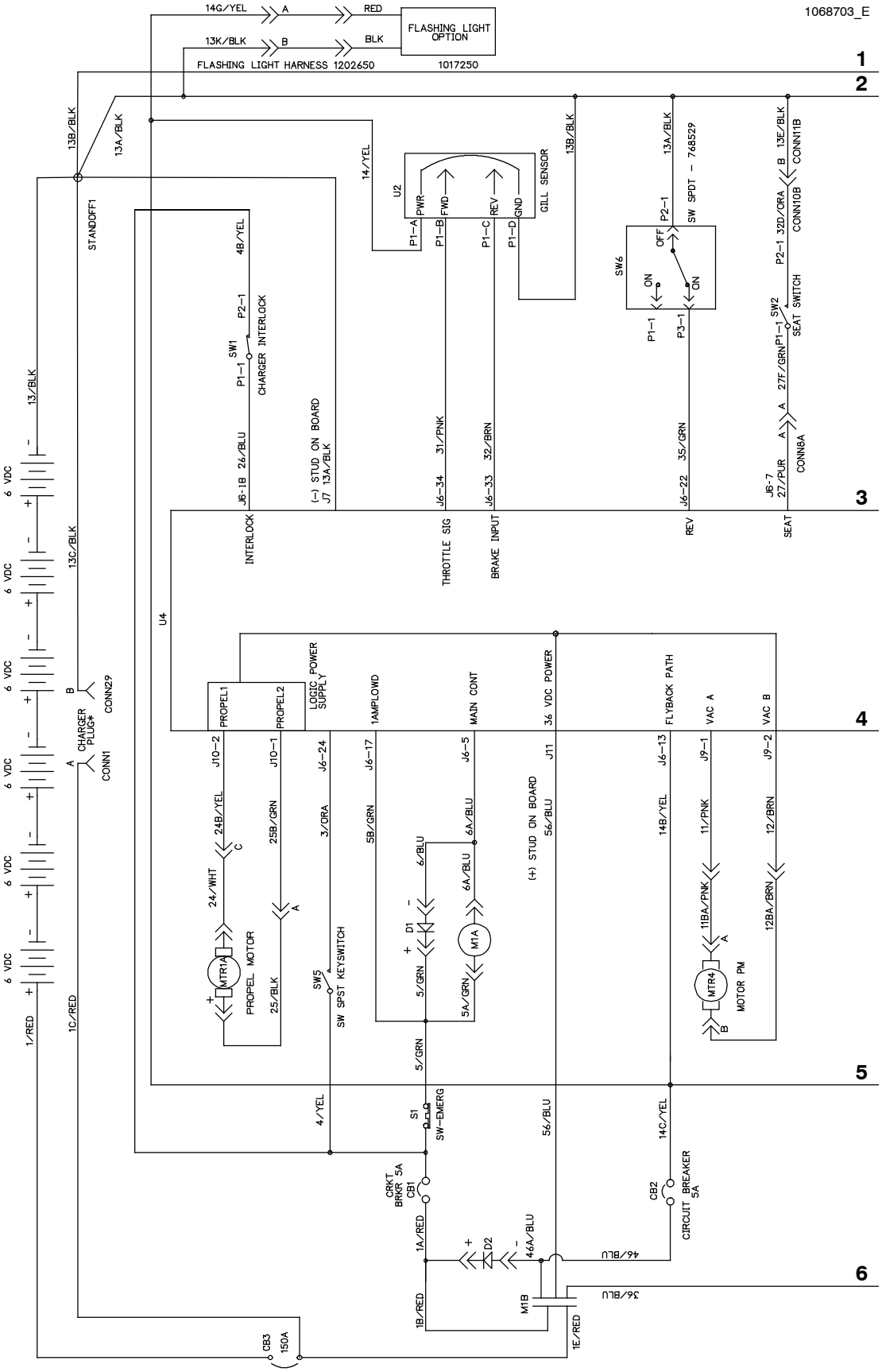

ELECTRICAL SCHEMATIC

1068703_E

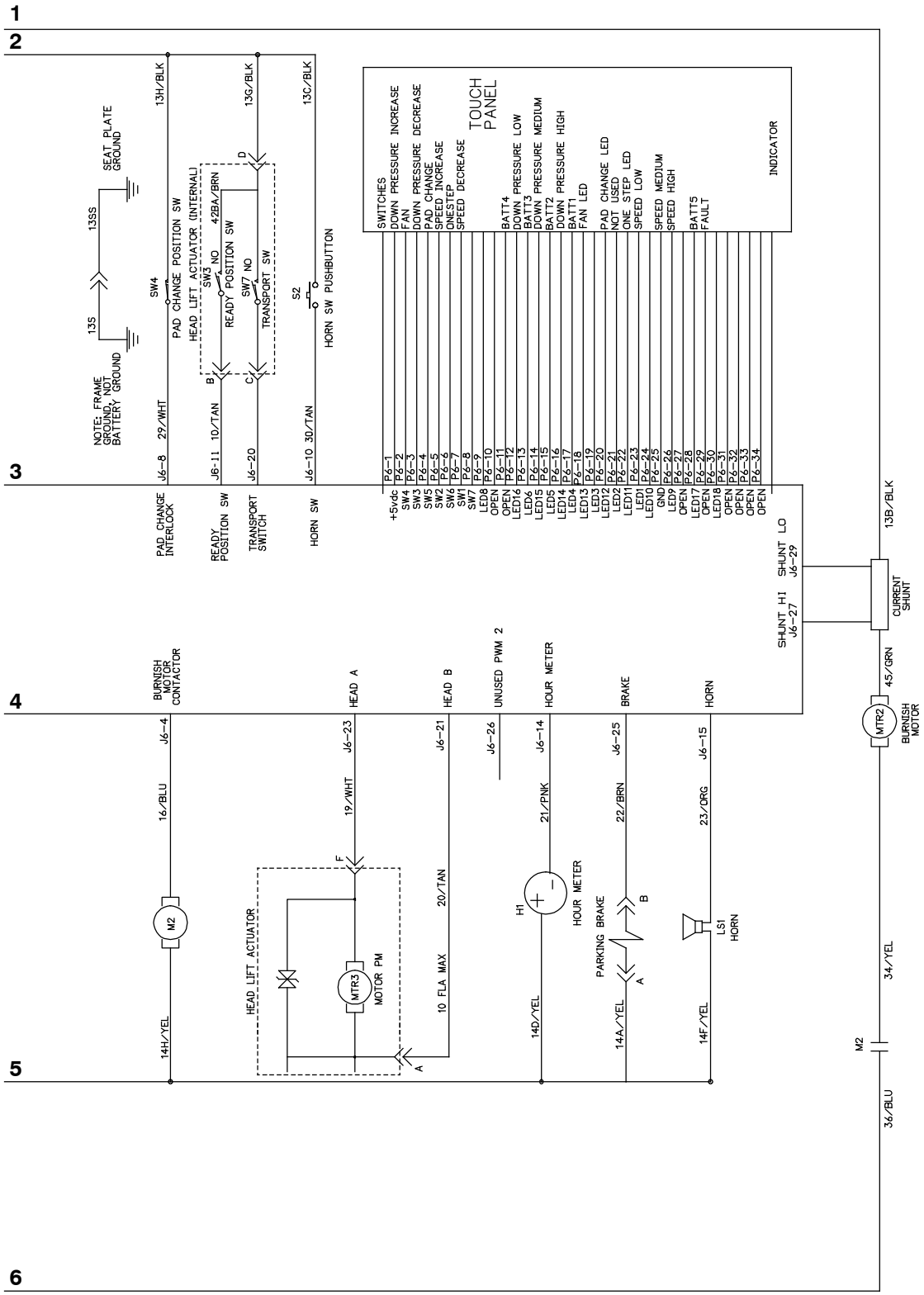

HARNESS GROUP, MAIN

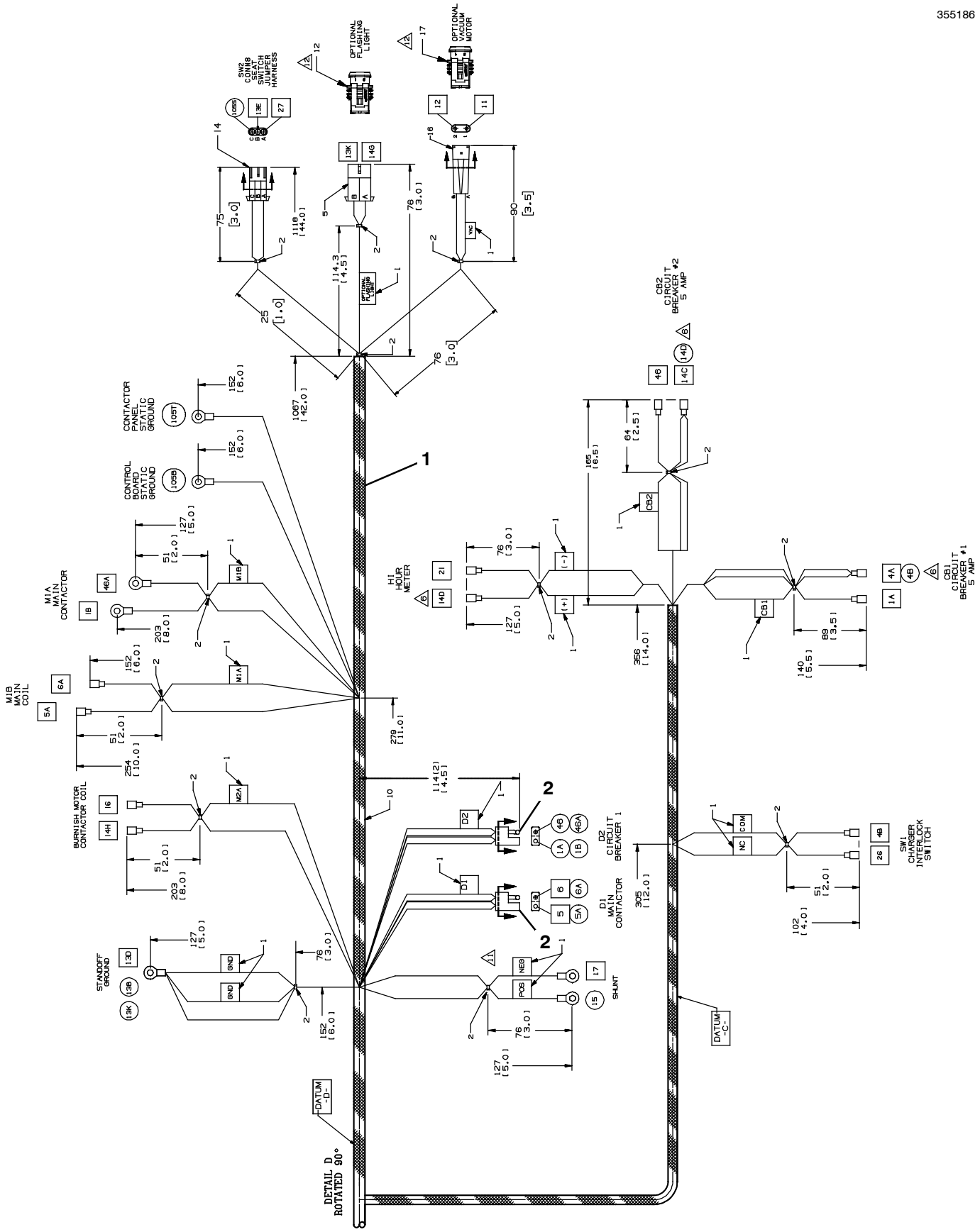

HARNESS GROUP, MAIN - CONT'D

355186

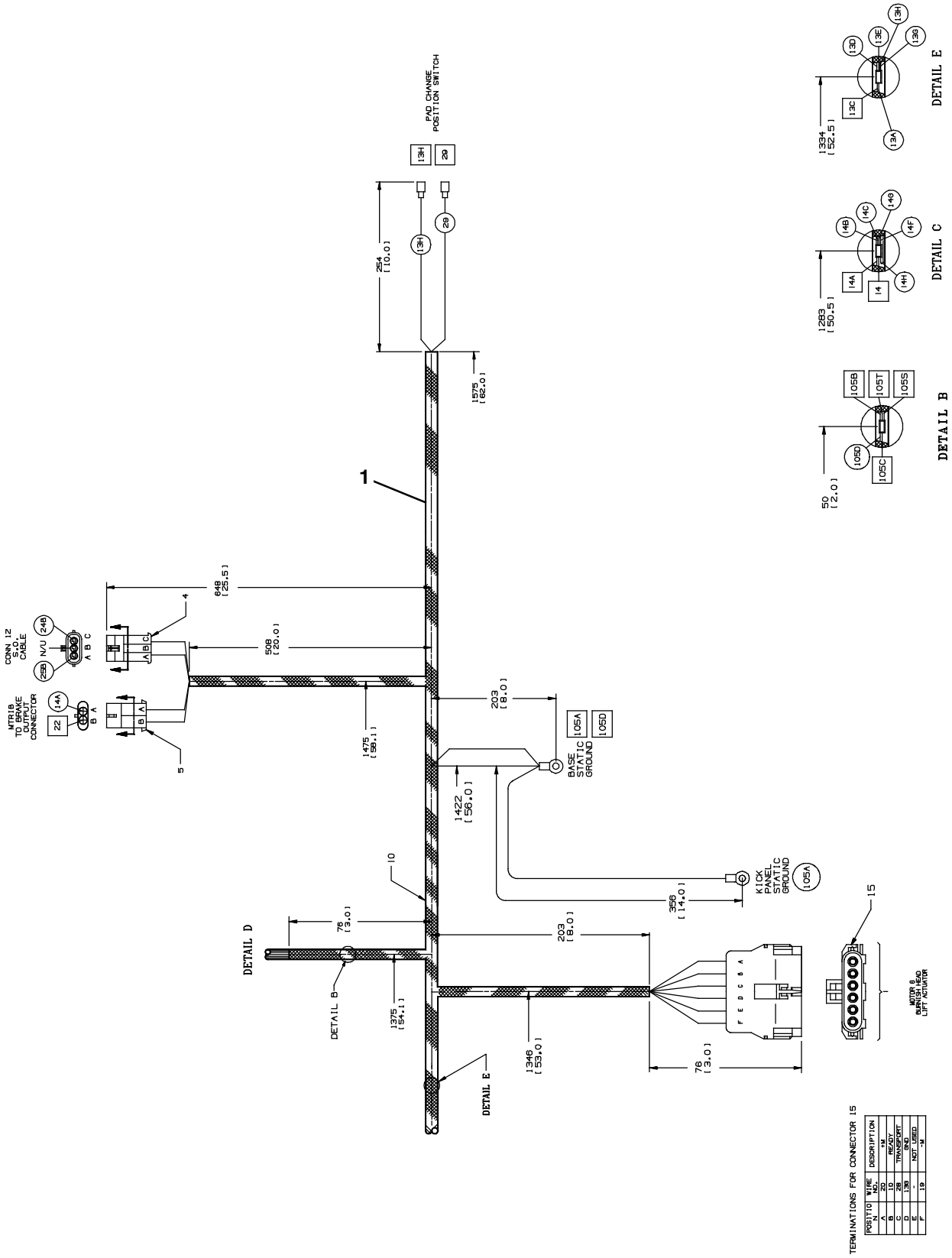

TERMINATIONS FOR CONNECTOR 15

POSITION	WIRE NO.	DESCRIPTION
N	22	-N
A	22	READY
B	10	
C	28	TRANSPORT
D	130	RED
E	-	NOT USED
F	19	-N

HARNESS GROUP, MAIN - CONT'D

355186

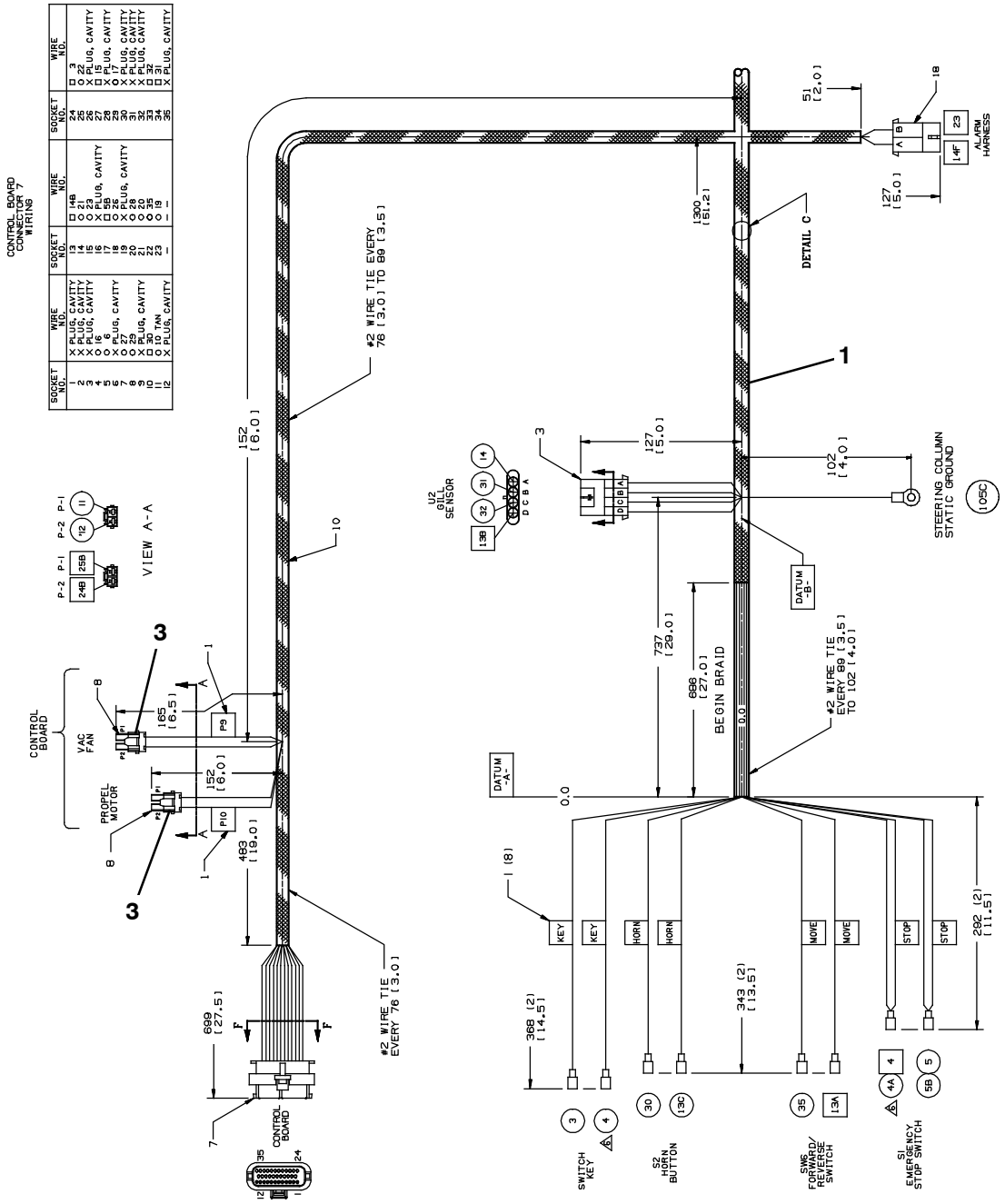

	Ref.	Part No.	Serial Number	Description	Qty.
∇	1	1069053	(00000000-)	Harness, Main [Orion]	1
▲	2	222290	(00000000-)	Diode, Ele, Plug	2
▲	3	1013835	(00000000-)	Connector Body, Fem, 2 Recept.[Molex]	2

∇ ASSEMBLY

▲ INCLUDED IN ASSEMBLY

HARNESS GROUP, MOTOR

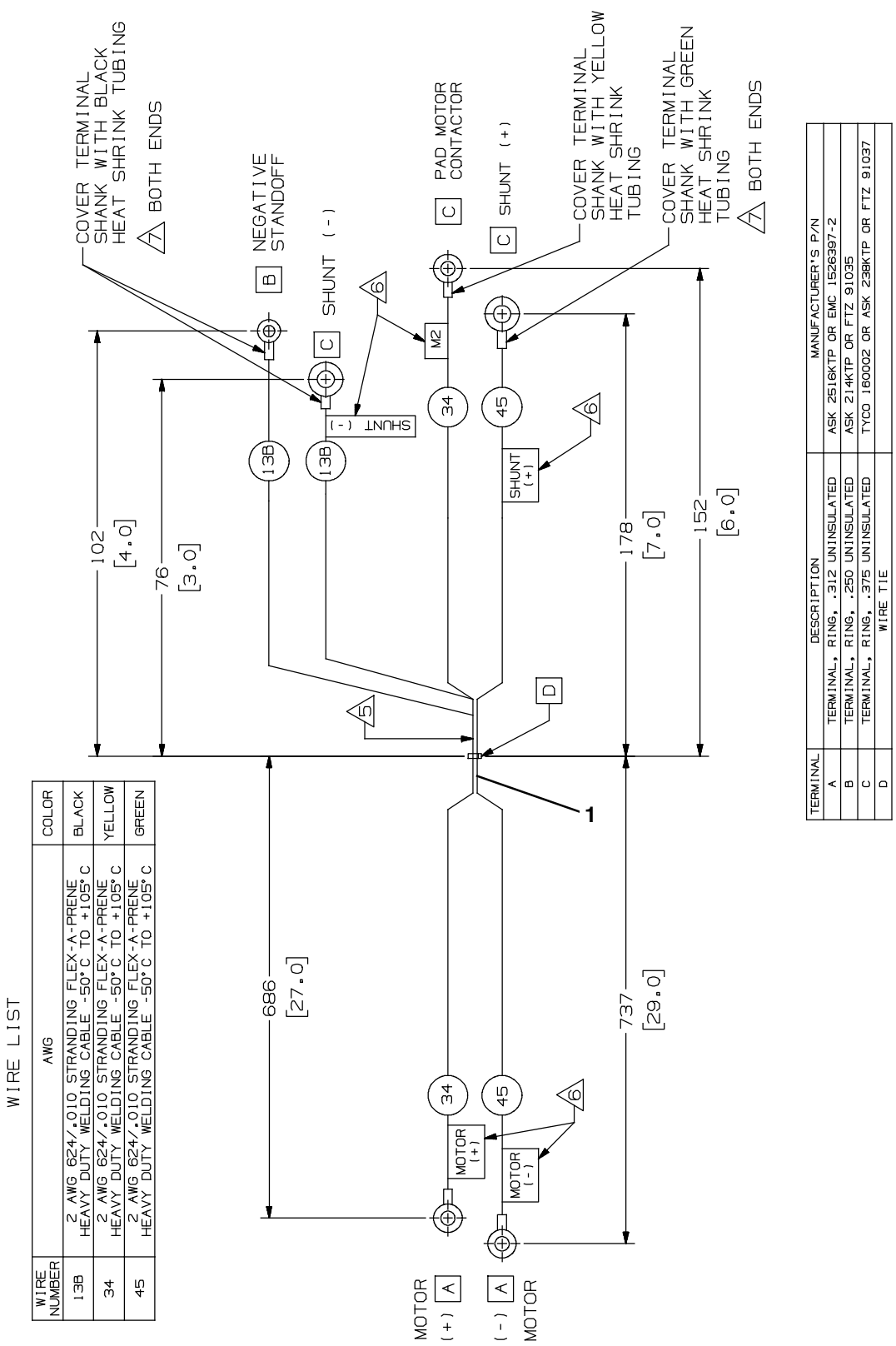

Ref.	Part No.	Serial Number	Description	Qty.
1	1069866	(00000000-)	Harness, Motor, [Orion]	1

HARNESS GROUP, CONTROL BOARD

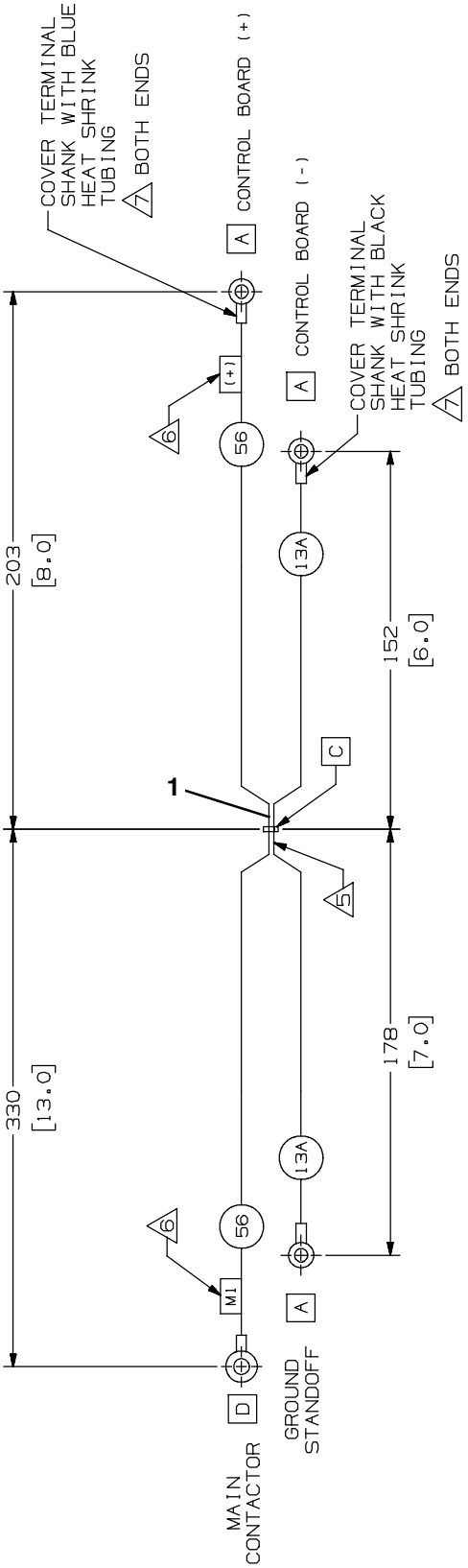

WIRE LIST

WIRE NUMBER	AWG	COLOR
13A	2 AWG 624/.010 STRANDING FLEX-A-PRENE HEAVY DUTY WELDING CABLE -50° C TO +105° C	BLACK
56	2 AWG 624/.010 STRANDING FLEX-A-PRENE HEAVY DUTY WELDING CABLE -50° C TO +105° C	BLUE [PREFERRED] BLACK [ALTERNATE]

TRM	DESCRIPTION	MANUFACTURER'S P/N(S)
A	TERMINAL, RING, .250 UNINSULATED	ASK 214KTP, OR, ASK 214L FTZ 91035 MOLEX 19221-041B; OPTIONAL MOLEX 19221-0419 AND SOLDER DIPPING
B	NOT USED	NOT USED
C	WIRE TIE	
D	TERMINAL, RING, 10MM, UNINSULATED	TYCO 160002 ASK 238KTP, OR ASK 238L, OR, FTZ 91037 MOLEX 19221-0235; OPTION MOLEX 19221-0380 AND SOLDER DIPPING

Ref.	Part No.	Serial Number	Description	Qty.
1	1070076	(00000000-)	Harness, Control Board [Orion]	1

HARNESS GROUP, LIGHT

355213

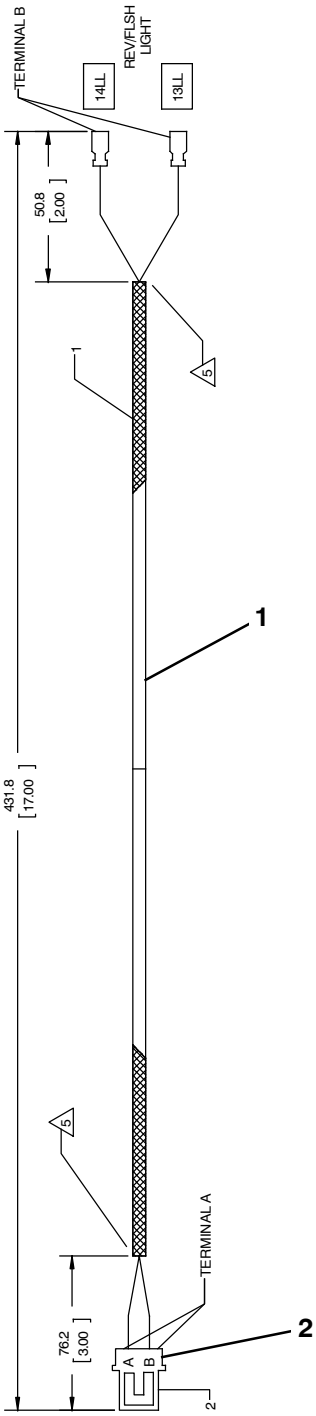

WIRE #	AWG	COLOR	WIRE SPEC	TERMINAL A	TERMINAL B
13LL	18	BLK	UL-1015/AWM	P.E. 12077411 FEMALE TERMINAL WITH CABLE SEAL	BULLET .156F
14LL	18	YEL	UL-1015/AWM	P.E. 12077411 FEMALE TERMINAL WITH CABLE SEAL	BULLET .156F

ITEM	DESCRIPTION	QTY
1	BLACK NYLON BRAIDING	AS NEEDED
2	CONNECTOR BODY 2F, 280MP/SERIES P.E. 15300027 CONNECTOR TPA, 280MP/SERIES P.E. 15300014	1

	Ref.	Part No.	Serial Number		Description	Qty.
∇	1	1202650	(00000000-	)	Harness, Light [Orion]	1
▲	2	78950	(00000000-	)	Connector, Fem, 2cav, Mp280 Sealed (Connector Only - No Assembly Available)	1
▲	2	25837	(00000000-	)	Terminal, Fem, Mp280, Sealed, 22-20ga	2
▲	2	25830	(00000000-	)	Seal, Wire, 18-22ga [Wp / Mp280 Sealed]	2
▲	2	78952	(00000000-	)	Lock, Secondary, 2cav, Mp280 Sealed	1

∇ ASSEMBLY

▲ INCLUDED IN ASSEMBLY

HARNESS GROUP, ALARM

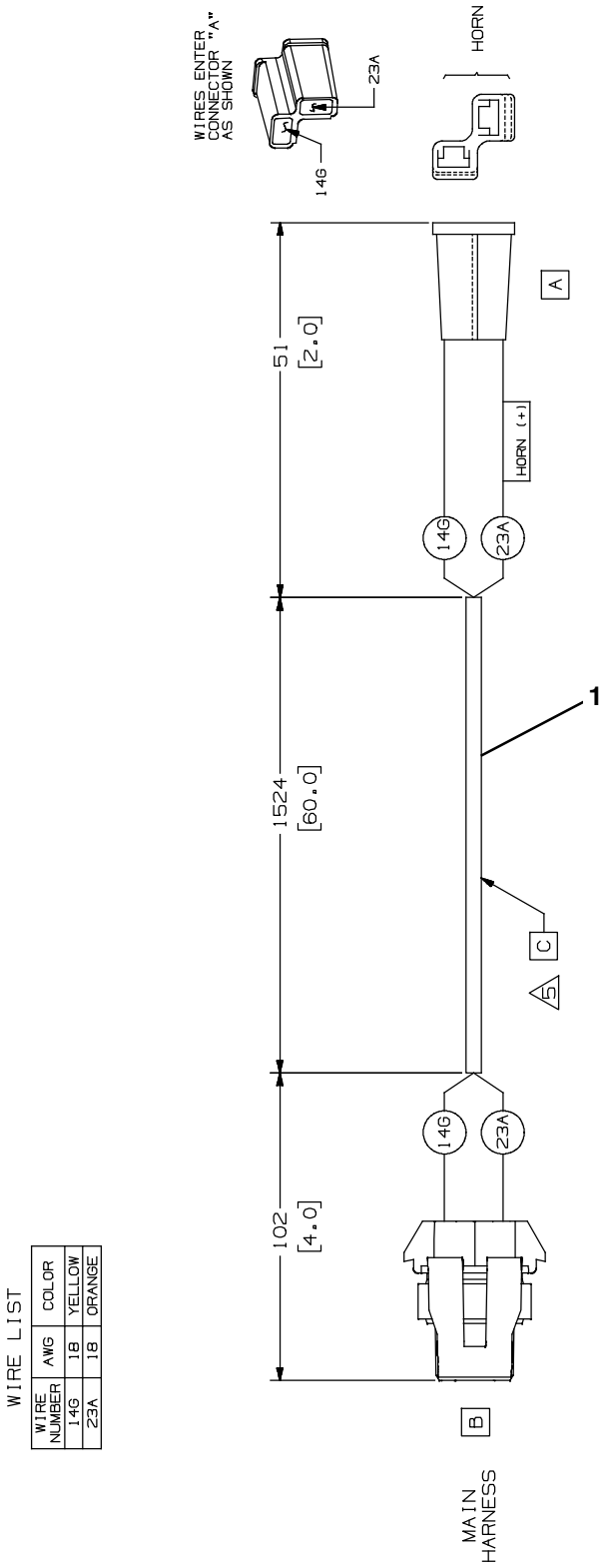

Ref.	Part No.	Serial Number	Description	Qty.
1	1070046	(00000000-)	Harness, Alarm, Orion	1

HARNESS GROUP, MOTOR BRAKE

355212

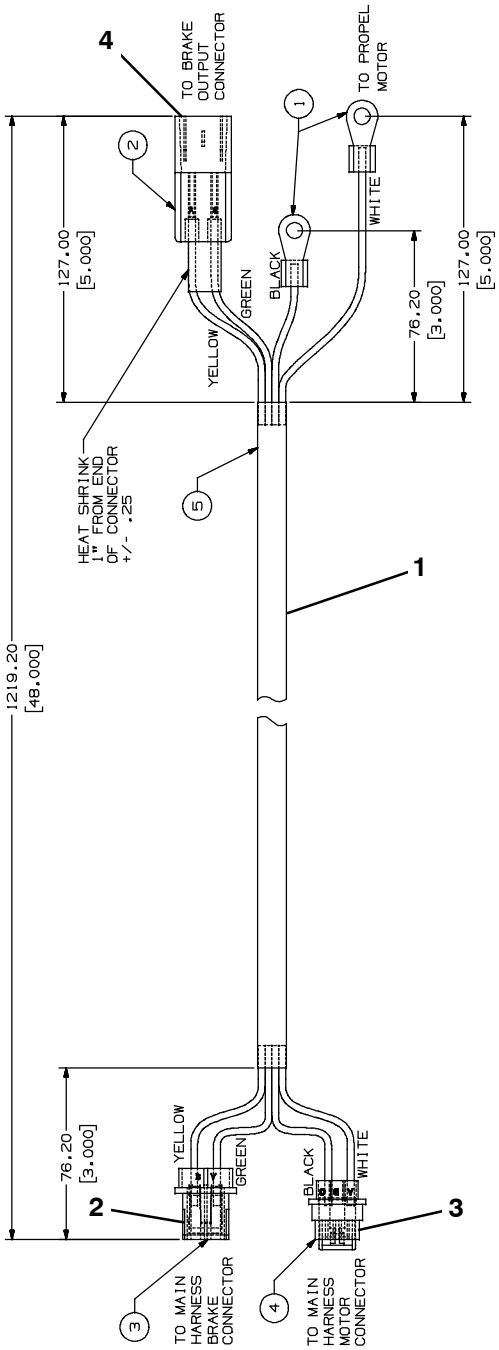

ITEM	P/N	DESCRIPTION	QTY.
1	_____	TERMINAL, RING .343 ID REF X .625 OD MAX WITH HEAT SHRINK INS	2
2	_____	CONNECTOR, MAL, 2CAV, MP280 SEALED	1
3	_____	CONNECTOR, FEM, 2CAV, MP280 SEALED	1
4	_____	CONNECTOR, FEM, 3CAV, MP630 SEALED	1
5	_____	MULTI CONDUCTOR CORD, TWO 10 AWG (ONE BLACK AND ONE WHITE) X TWO 18 AWG (ONE GREEN AND ONE YELLOW), ENDUROFLEX CRXM CABLE	AS REQ'D

	Ref.	Part No.	Serial Number	Description	Qty.
∇	1	1065808	(00000000-)	Harness, Motor, Brake [T7/Ssr]	1
▲	2	78950	(00000000-)	Connector, Fem, 2cav, Mp280 Sealed (Connector Only - No Assembly Available)	1
▲	2	25837	(00000000-)	Terminal, Fem, Mp280, Sealed, 22- 20ga	2
▲	2	25830	(00000000-)	Seal, Wire, 18- 22ga [Wp / Mp280 Sealed]	2
▲	2	78952	(00000000-)	Lock, Secondary, 2cav, Mp280 Sealed	1
▲	3	1047186	(00000000-)	Connector, Fem, 3 Recept [Mp630]	1
▲	4	25850	(00000000-)	Connector, Mal, 2cav, Mp280 Sealed	1
▲	4	25832	(00000000-)	Terminal, Mal, Mp280, Sealed, 18- 16ga	2

∇ ASSEMBLY

▲ INCLUDED IN ASSEMBLY

BATTERY GROUP, AGM 390AH

355207

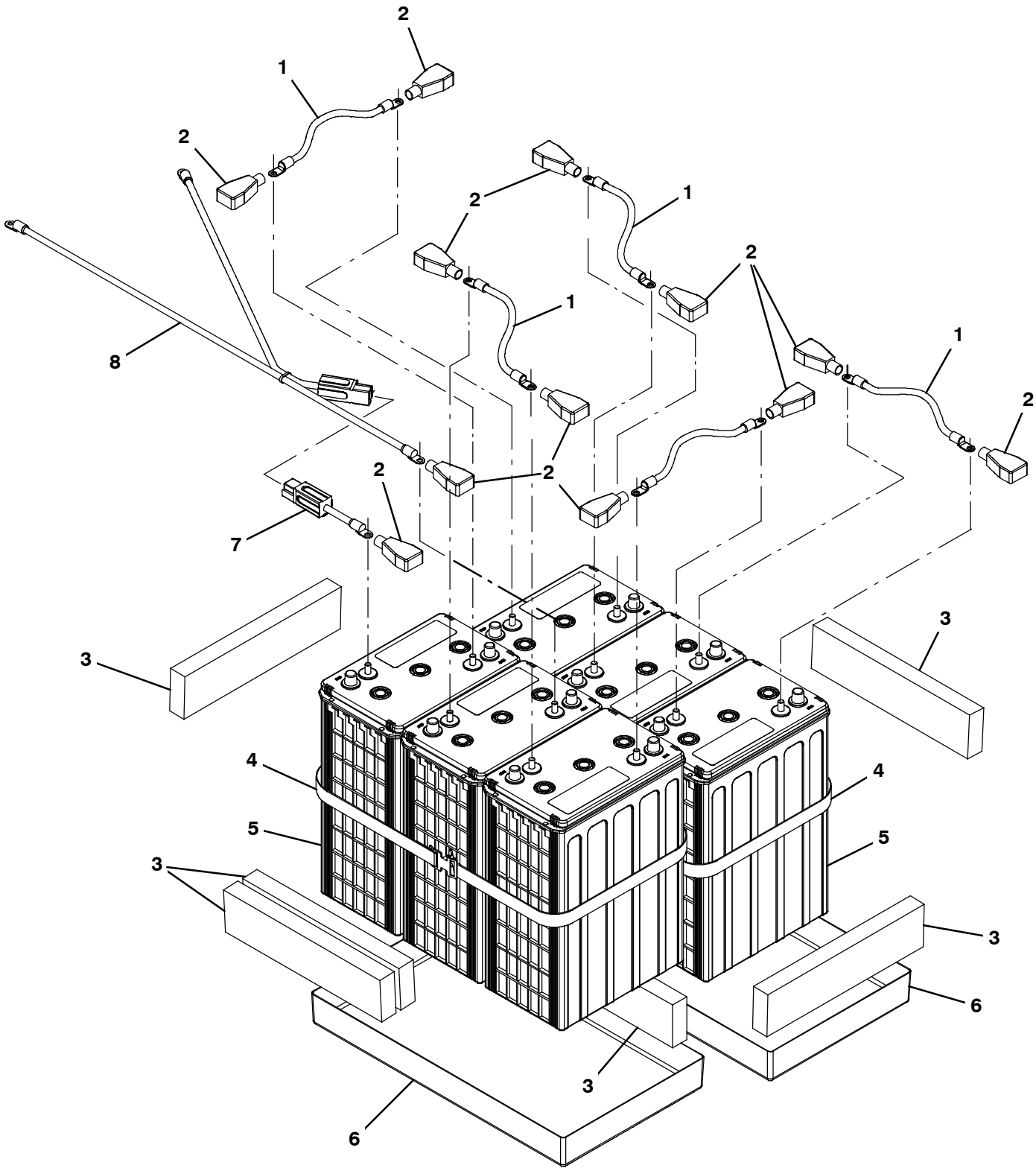

BATTERY GROUP, AGM 390AH

Ref.	Part No.	Serial Number	Description	Qty.
1	59996	(00000000-)	Cable, 02ga 13.0l Blk .34ring /.34ring	5
2	1205540	(00000000-)	Boot, Terminal, Battery, 1/0- 2/0ga, Blk	12
3	630375	(00000000-)	Spacer, Battery, Foam, 1.25 X 3.3 X 13.7	6
4	222682	(00000000-)	Strap, Poly, Webbing 1.0 X 100.0	2
5	1262282	(00000000-)	Battery, Agm, 06vdc 390ah, W/Box	6
6	1200734	(00000000-)	Tray, Battery [Orion]	2
7	1205990	(00000000-)	Cable Assy, 02ga Red, .31ring/Pp180	1
8	1201383	(00000000-)	Harness, Battery, Orion	1

OFF- BOARD CHARGER GROUP

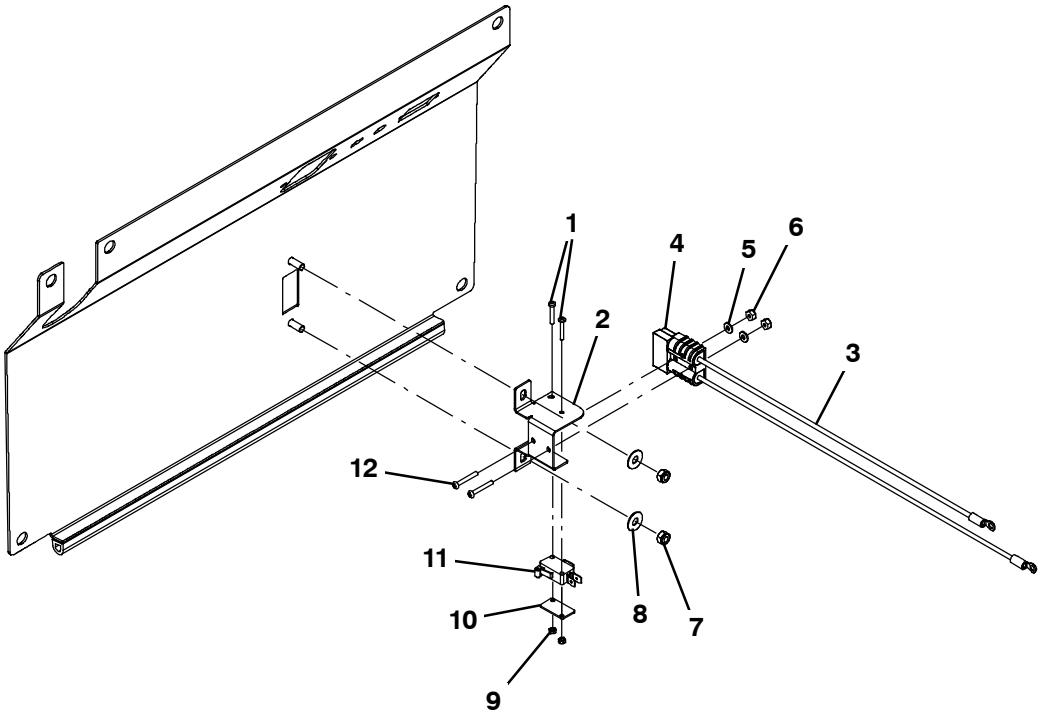

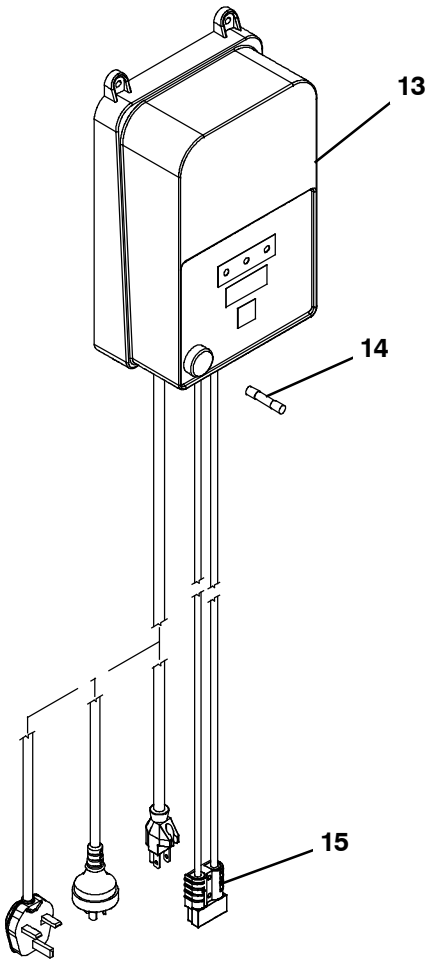

OFF- BOARD CHARGER GROUP

	Ref.	Part No.	Serial Number	Description	Qty.
	1	06922	(00000000-)	Screw, Pan, Phl, M3 X 0.50 X 20, 4.8	2
	2	1200885	(00000000-)	Bracket, Connector, Plug	1
∇	3	1201389	(00000000-)	Harness, Charger, Off Board [Orion]	1
▲	4	130155	(00000000-)	Connector, Battery, 6ga 50a, Gray[2cont]	1
	5	19064	(00000000-)	Washer, Flat, 0.16b 0.38d .05, Pl, 06	2
	6	75939	(00000000-)	Nut, Hex, Lock, #06- 32, Nl	2
	7	08712	(00000000-)	Nut, Hex, Lock, M6 X 1.00, Nl, Ss	2
	8	01684	(00000000-)	Washer, Flat, 0.27b 0.69d .05, Ss	2
	9	579211	(00000000-)	Nut, Hex, Lock, M3 X 0.50, Nl, Ss	2
	10	601359	(00000000-)	Plate, Backing, Switch	1
	11	600437	(00000000-)	Switch, Snap, 15a, Rlr	1
	12	25005	(00000000-)	Screw, Pan, Phl, 06- 32 X 1.00, G1	2
∇	13	9011009	(00000000-)	Charger Kit, 36vdc 120vac, Off- Brd, [Na]	1
▲	14	1206662	(00000000-)	Fuse, 015a, 250vac [Baf- 15]	1
▲	15	130155	(00000000-)	Connector, Battery, 6ga 50a, Gray[2cont]	1
∇	13	9011010	(00000000-)	Charger Kit, 36vdc 230vac, Off- Brd [Aus]	1
▲	14	1206662	(00000000-)	Fuse, 015a, 250vac [Baf- 15]	1
▲	15	130155	(00000000-)	Connector, Battery, 6ga 50a, Gray[2cont]	1
∇	13	9011011	(00000000-)	Charger Kit, 36vdc 230vac, Off- Brd [Uk]	1
▲	14	1206662	(00000000-)	Fuse, 015a, 250vac [Baf- 15]	1
▲	15	130155	(00000000-)	Connector, Battery, 6ga 50a, Gray[2cont]	1

∇ ASSEMBLY

▲ INCLUDED IN ASSEMBLY

MANUAL BATTERY WATERING SYSTEM (S/N 11021889-)

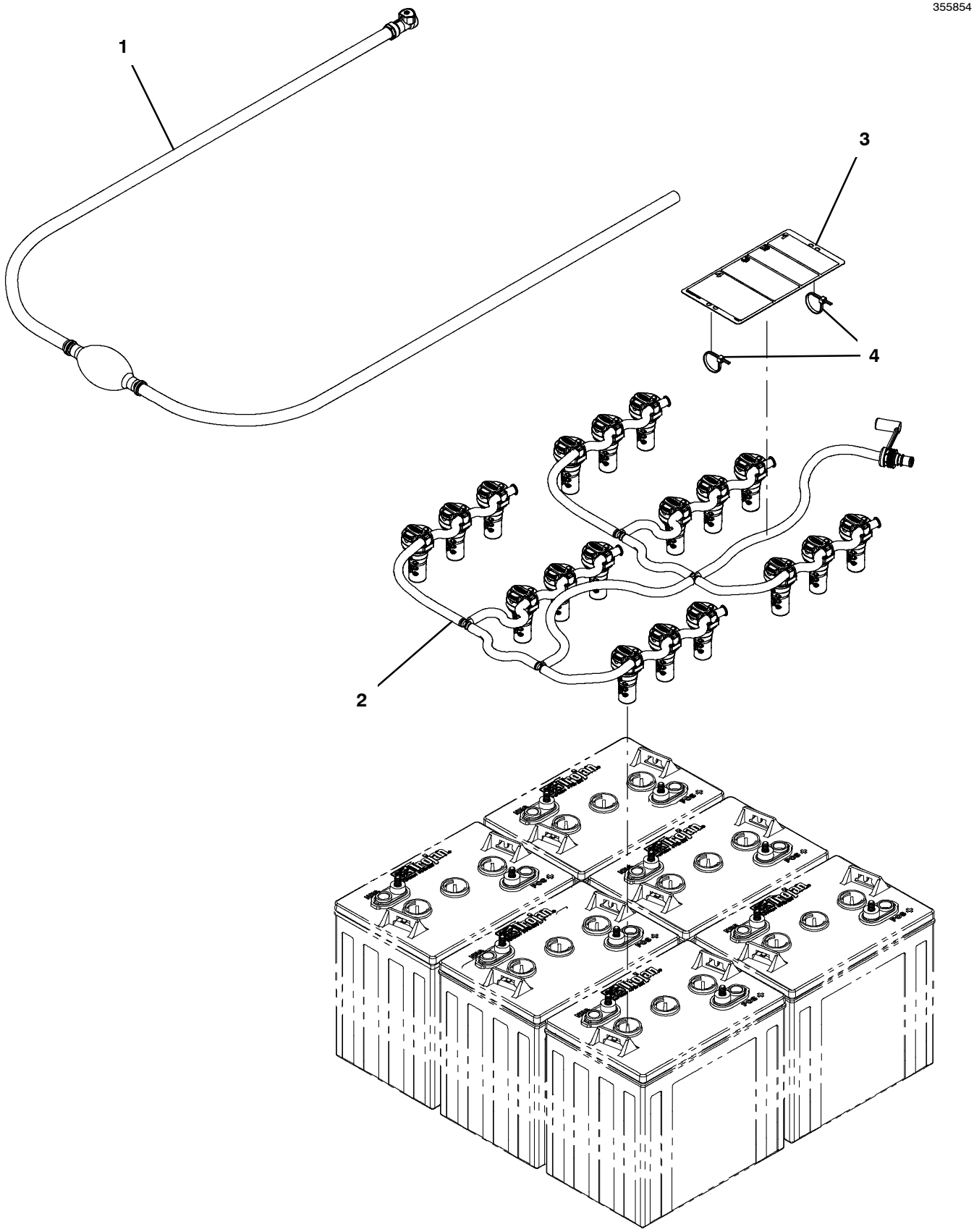

MANUAL BATTERY WATERING SYSTEM (S/N 11021889-)

	Ref.	Part No.	Serial Number	Description	Qty.
∇		9045074*	(11021889-)	Fill Kit, Battery, Mnl, Ci [Trojan]	1
▲	1	1236295	(11021889-)	Pump, Hand, Battery	1
▲	2	1248178	(11021889-)	Manifold Assy, Water, 6 Btry [Trojan]	1
▲	3	1253250	(11021889-)	Label, Tag, Battery [Bwt Watering]	1
▲	4	130773	(11021889-)	Tie, Cable, Nyl, 11.0l, .14w, 3.0 Max. D	2

*THIS KIT IS INTENDED FOR USE WITH TROJAN® LEAD ACID BATTERIES ONLY.

∇ ASSEMBLY
▲ INCLUDED IN ASSEMBLY

HYDROLINK® BATTERY WATERING SYSTEM KIT (S/N 00000000- 11021888)

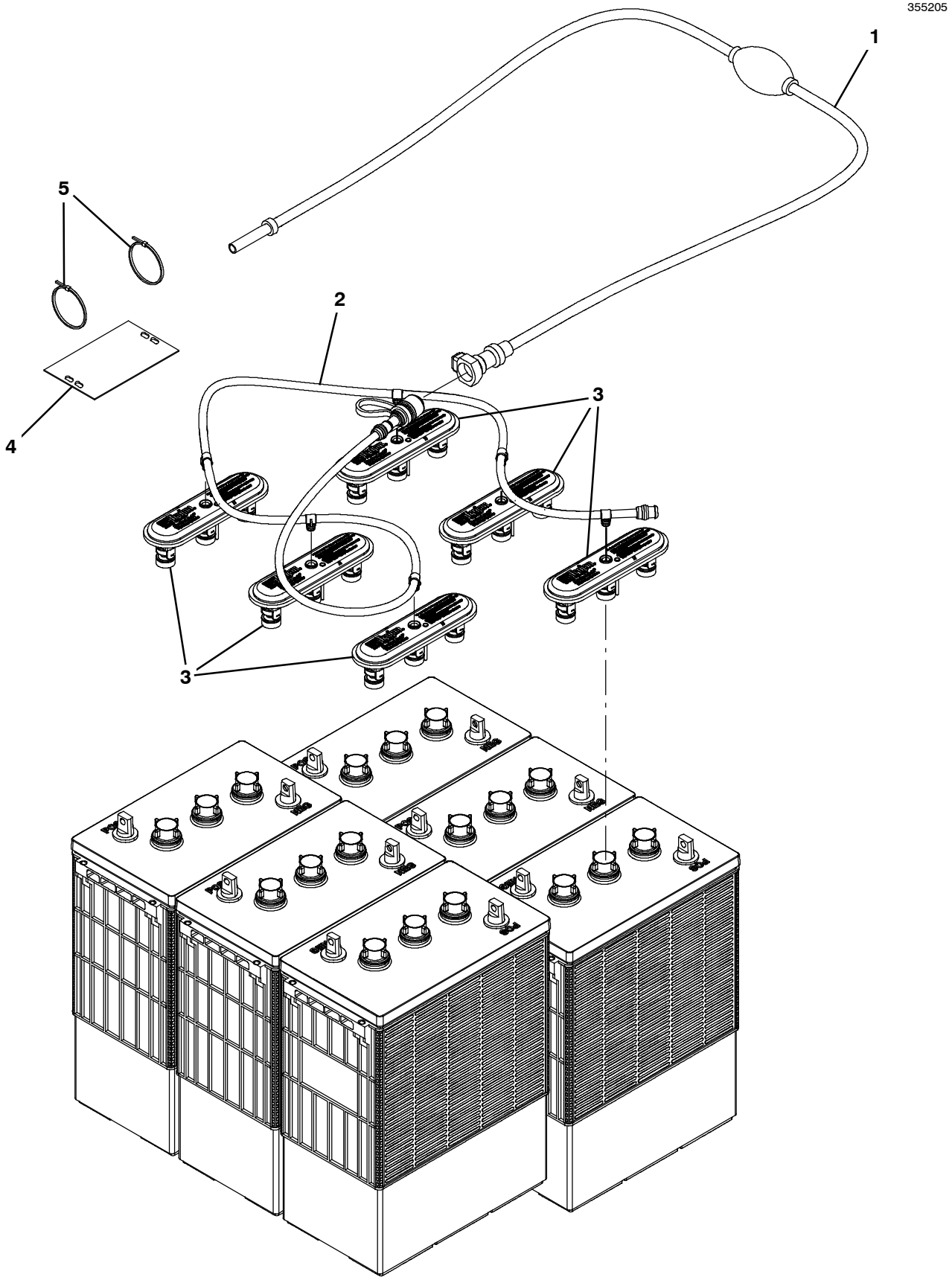

HYDROLINK® BATTERY WATERING SYSTEM KIT (S/N 00000000- 11021888)

	Ref.	Part No.	Serial Number	Description	Qty.
∇		9010301*	(00000000- 11021888)	Pump Kit, Fill, Battery,36vdc,Ci[Trojan] (Replaced By 9045074)	1
▲	1	1058939	(00000000- 11021888)	Pump Kit, Fill, Battery	1
▲	2	1201997	(00000000- 11021888)	Tube, Water, Battery, 36vdc [Trojan]	1
▲	3	1204142	(00000000- 11021888)	Cap, Fill, Battery [Trojan]	6
▲	4	1071084	(00000000- 11021888)	Label, Tag, Battery [Hydrolink Watering]	1
▲	5	130773	(00000000- 11021888)	Tie, Cable, Nyl, 11.0l, .14w, 3.0 Max. D	2

*THIS KIT IS INTENDED FOR USE WITH TROJAN® LEAD ACID BATTERIES ONLY.

HYDROLINK® IS A REGISTERED TRADEMARK OF TROJAN® BATTERY COMPANY.

∇ ASSEMBLY

▲ INCLUDED IN ASSEMBLY

FLASHING LIGHT KIT

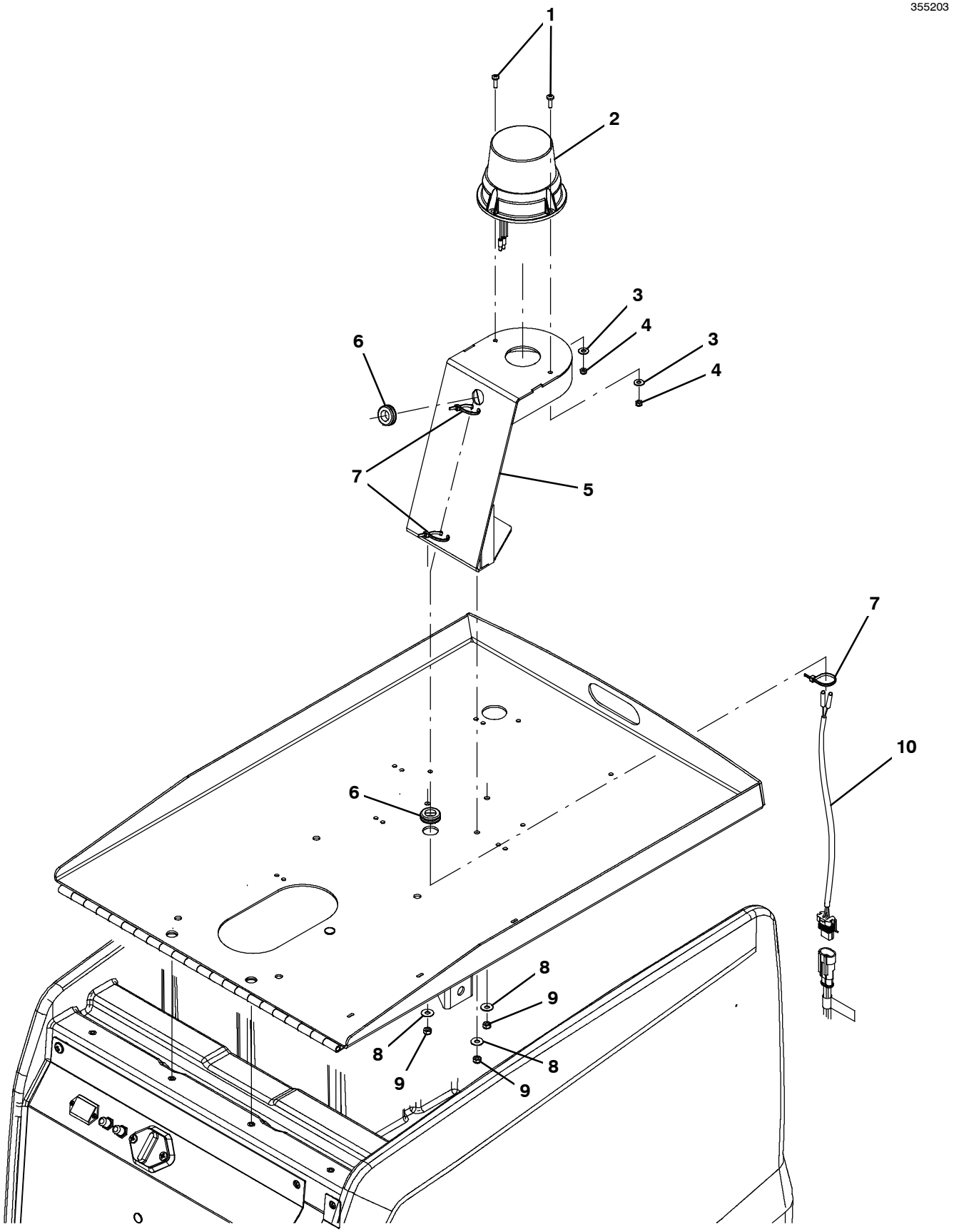

FLASHING LIGHT KIT

	Ref.	Part No.	Serial Number	Description	Qty.
∇		9013017	(00000000-)	Light Kit, Strobe, Ci, [B10/Sg Rider]	1
▲	1	1045487	(00000000-)	Screw, Pan, Phl, M5 X 0.80 X 16, Blk	2
▲	2	1075283	(00000000-)	Light, Strobe, Amb, 12- 48vdc [Led] (Does Not Include Terminals - Need to Order Separately)	1
▲		55272	(00000000-)	Terminal, Bullet, Mal, .157d, 12ga	2
▲	3	01683	(00000000-)	Washer, Flat, 10, Ss	2
▲	4	09739	(00000000-)	Nut, Hex, Lock, M5 X 0.80, Nl, Ss	2
▲	5	1202081	(00000000-)	Bracket Wldt, Light, Flsh	1
▲	6	10632- 2	(00000000-)	Grommet, Rbr, 0.62id, F/0.9h, .12 Matl	2
▲	7	130773	(00000000-)	Tie, Cable, Nyl, 11.0l, .14w, 3.0 Max. D	3
▲	8	01684	(00000000-)	Washer, Flat, 0.27b 0.69d .05, Ss	3
▲	9	08712	(00000000-)	Nut, Hex, Lock, M6 X 1.00, Nl, Ss	3
▲	10	1202650	(00000000-)	Harness, Light [Orion]	1

∇ ASSEMBLY

▲ INCLUDED IN ASSEMBLY

WALL ROLLER (686 MM / 27 IN HEAD) GROUP

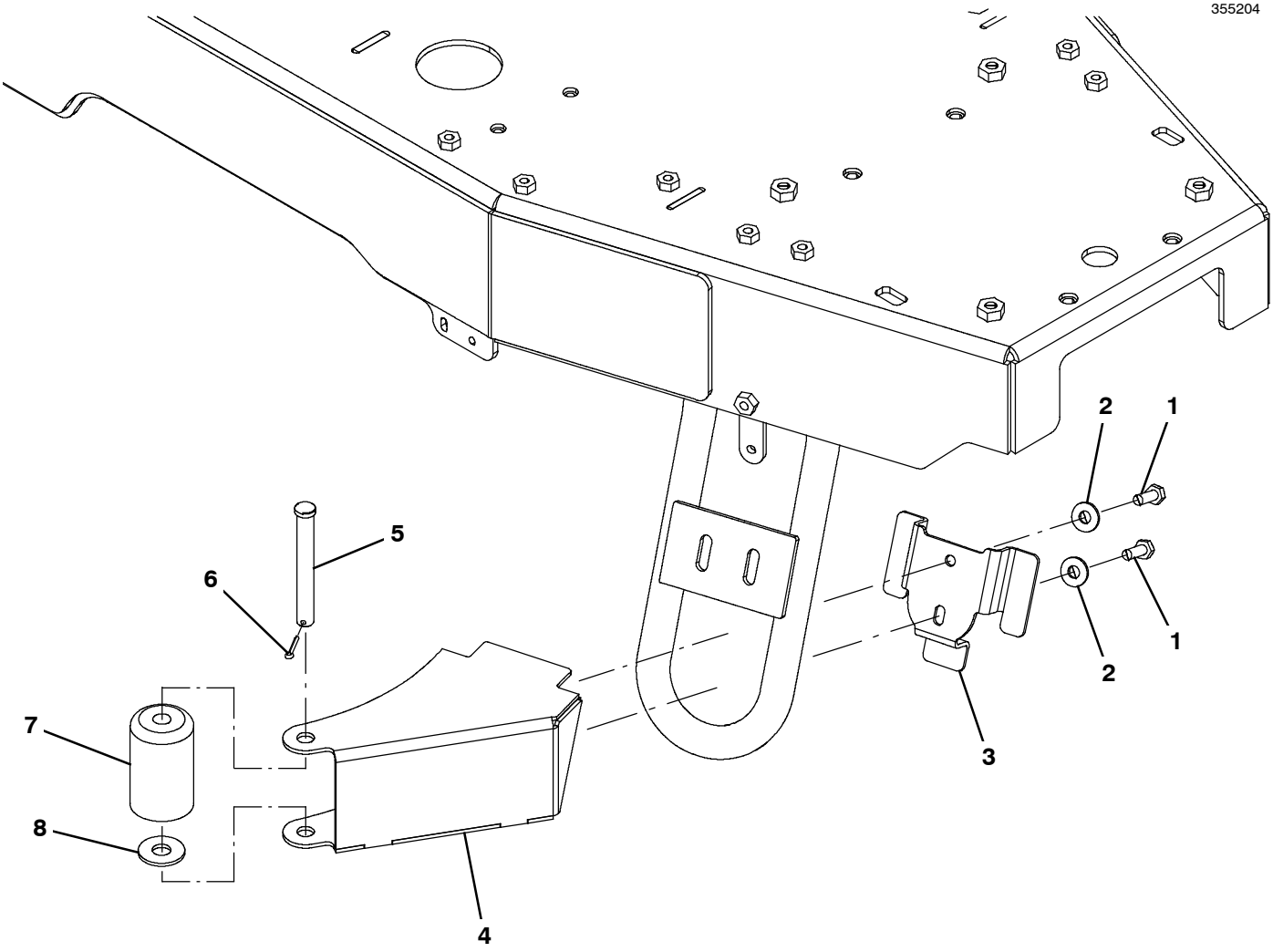

WALL ROLLER (686 MM / 27 IN HEAD) GROUP

Ref.	Part No.	Serial Number	Description	Qty.
1	12333	(00000000-)	Screw, Hex, M8 X 1.25 X 25, Ss, Nl	2
2	01685	(00000000-)	Washer, Flat, 0.38b 0.88d .08, Ss	2
3	1202105	(00000000-)	Bracket, Mtg, Rlr, Wall	1
4	1206643	(00000000-)	Bracket Wldt, Rlr,Wall	1
5	51528	(00000000-)	Pin, Clevis, 0.50d X	1
6	08346	(00000000-)	Pin, Cotter, .125 X 0.75	1
7	222178	(00000000-)	Roller, Pyu, 1.88d 0.53b 3.05l	1
8	41619	(00000000-)	Washer, Flat, 0.56b 1.38d .11, Ss	1

DOCUMENTATION GROUP (ONLINE ONLY)

Ref.	Part No.	Serial Number	Description	Qty.
	9010729	(00000000-)	Manual, Parts [B10, En]	1
	9010734	(00000000-)	Manual, Oprtr [B10, En, Na]	1
	9010733	(00000000-)	Manual, Oprtr [B10, Es, Na]	1
	9010732	(00000000-)	Manual, Oprtr [B10, Fr, Na]	1
	9010736	(00000000-)	Manual, Service [B10]	1
	9010728	(00000000-)	Instr, Wall Chart [B10]	1

To view, print, order, download the latest Parts manual, other language Operator manuals, and Use and Care Guides (wall charts), visit:

www.tennantco.com/manual

ACTIVE DUST CONTROL BREAKDOWN, 1200929

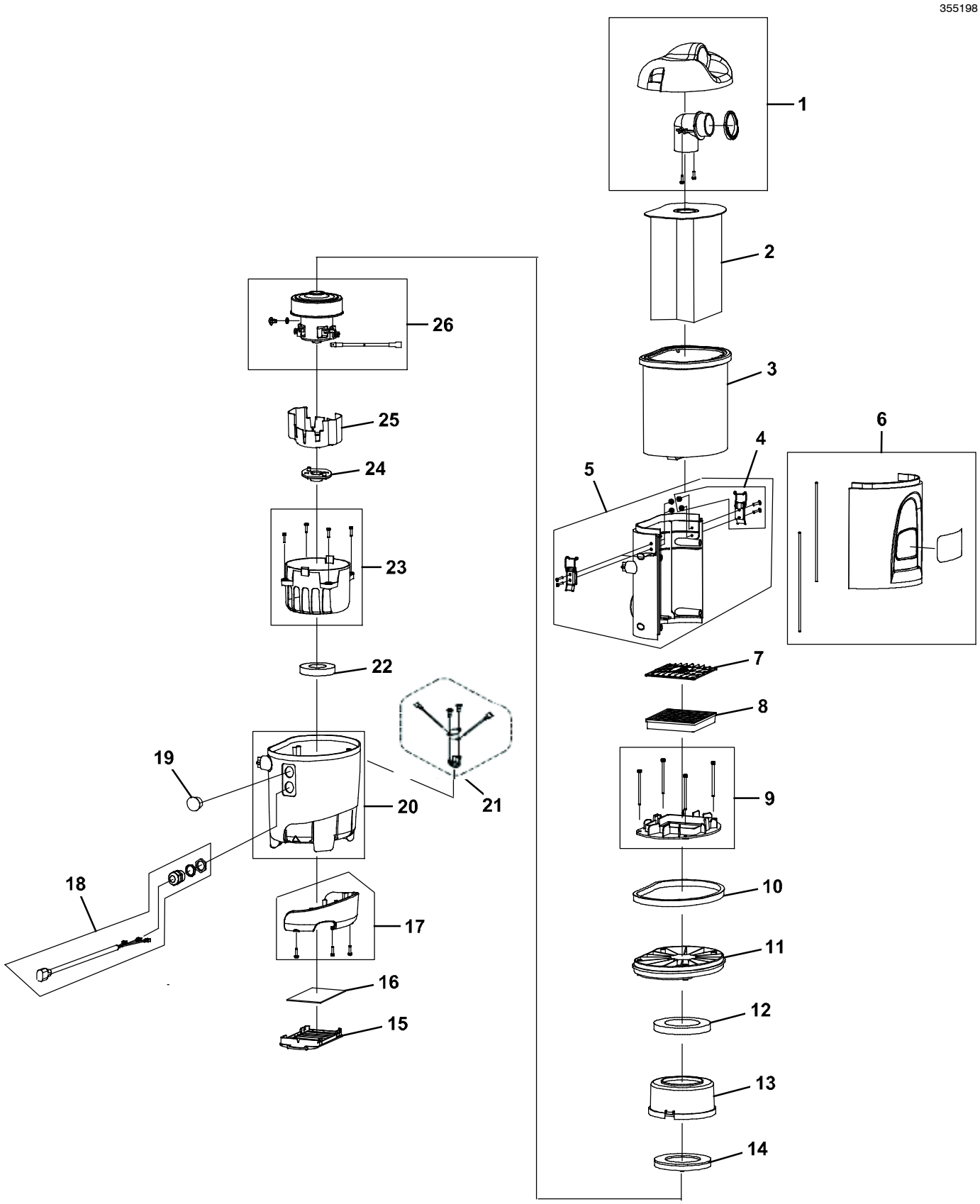

ACTIVE DUST CONTROL BREAKDOWN, 1200929

	Ref.	Part No.	Serial Number	Description	Qty.
∇		1200929	(00000000-)	Vacuum, Recvy, Dust	1
▲	1	9007783	(00000000-)	Cover, Hsng, Fr/ (Includes 2- #8x0.624” Screw)	1
▲	2	9007784	(00000000-)	Bag, Vacuum, 6 Qt [1pick=1pkg/12 Bags] (Qty 1 Included w/ Machine)	1
	2	9007866	(00000000-)	Bag, Vacuum, 6 Qt [1pk=1ctn/16=192 Bags]	1
▲	3	9007785	(00000000-)	Bag, Cloth, Afkmt, 6 Qt (Qty 1 Included w/ Machine)	1
▲	4	9007788	(00000000-)	Latch, Backpack, Fr/ (Includes 4- #8x0.624” Screw & 4- M3 Washer)	1
▲	5	9007789	(00000000-)	Cover, Rear, Fr/ 6 Qt [V- Bp- 6]	1
▲	6	9010838	(00000000-)	Cover, Front, W/Hepa Label	1
▲	7	9007813	(00000000-)	Frame, Fltr, Cap, Fr/	1
▲	8	9007812	(00000000-)	Filter, Hepa, Fr/	1
▲	9	9007811	(00000000-)	Plate, Filter, Fr/ (Includes 4- #8x0.625” Screw)	1
▲	10	9007810	(00000000-)	Seal, Body, Fr/	1
▲	11	9007809	(00000000-)	Cover, Motor, Fr/	1
▲	12	9007806	(00000000-)	Mount, Motor, Kit, Fr/	1
▲	13	9007808	(00000000-)	Shroud, Motor, Top, Fr/	1
▲	14	9007807	(00000000-)	Mount, Motor, Bottom, Fr/	1
▲	15	9007801	(00000000-)	Frame, Fltr, Bottom	1
▲	16	9007800	(00000000-)	Filter, Exhaust [1pick=1pkg] (1 Pkg = 6 Filters) (Qty 1 Included w/ Machine)	1
▲	17	9007799	(00000000-)	Bumper, Fr/ (Includes 3- #8x0.625” Screw)	1
▲	18	9010840	(00000000-)	Cord, Power, W/Strainrelief W/Nut	1
▲	19	9010841	(00000000-)	Plug	1
▲	20	9010839	(00000000-)	Housing, Motor	1
▲	21	9007817	(00000000-)	Switch, Thermal, Fr/ (Includes 2- #6x0.375” Screw)	1
▲	22	9007806	(00000000-)	Mount, Motor, Kit, Fr/	1
▲	23	9007805	(00000000-)	Shroud, Motor, Bottom, Fr/ (Includes 4- #8x0.625” Screw)	1
▲	24	9007804	(00000000-)	Mount, Motor, Bottom, Fr/	1
▲	25	9007803	(00000000-)	Shroud, Motor, Bottom, Fr/	1
▲	26	9007802	(00000000-)	Fan, Vacuum, Backpack, Fr/ (Includes 1- M4x6 Set Screw)	1

∇ ASSEMBLY

▲ INCLUDED IN ASSEMBLY

FRONT DRIVE WHEEL BREAKDOWN, 9008999

355192

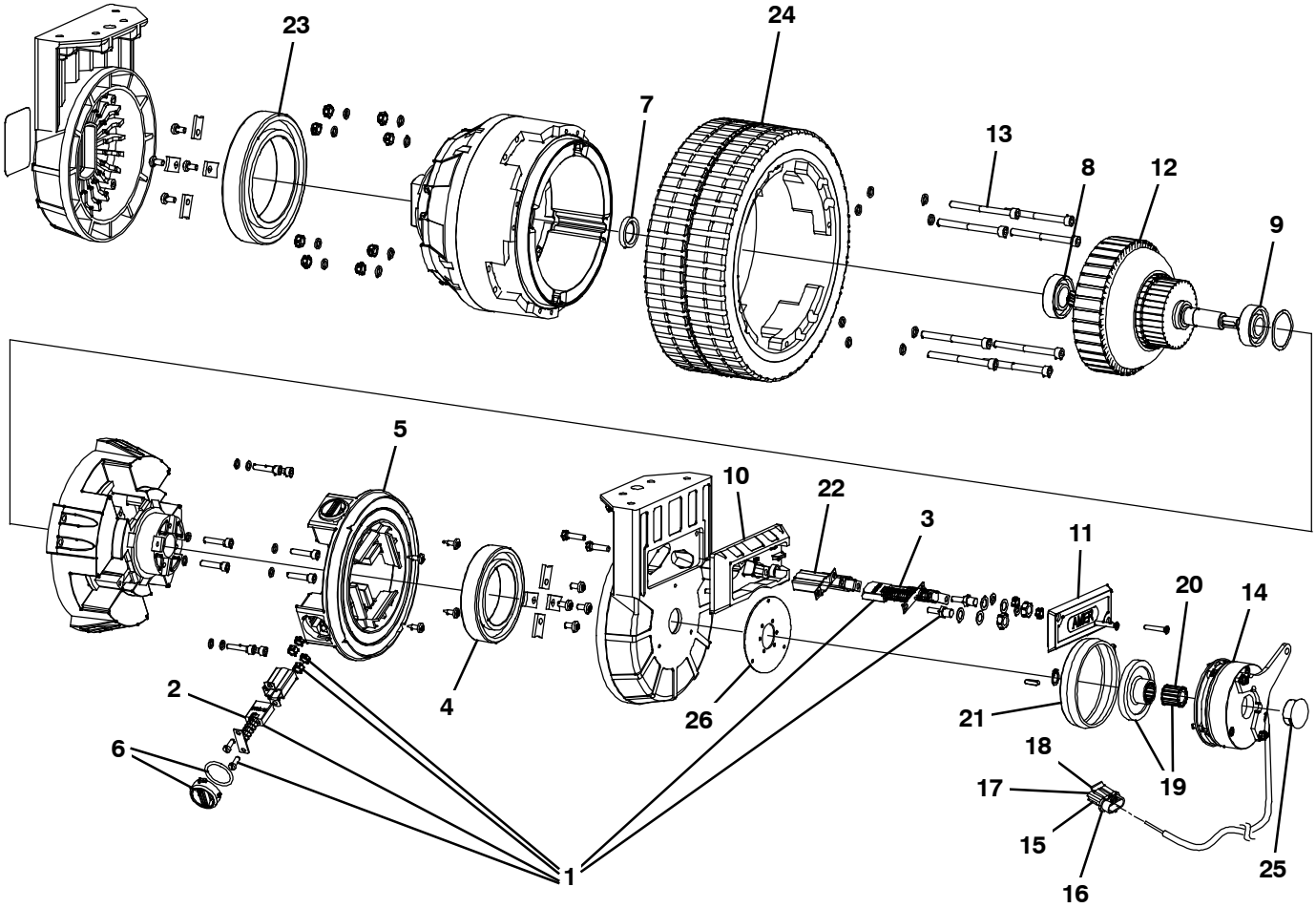

FRONT DRIVE WHEEL BREAKDOWN, 9008999

	Ref.	Part No.	Serial Number	Description	Qty.
∇		9008999	(00000000-)	Gearbox Kit, Wheel, 250mm, W/ Connector	1
▲	1	391261	(00000000-)	Vr, Brush Kit, Motor [Amer, 1pick=1kit]	1
▲∇		1029225	(00000000-)	Vr, Brush Kit, Carbon [1 Pac = 4pcs]	1
▲▲	2	1029224	(00000000-)	Vr, Brush, Carbon [1 Pc]	4
▲∇		1029226	(00000000-)	Vr, Brush Kit, Carbon [1 Pac = 2 Pcs]	1
▲▲	3	398492	(00000000-)	Brush, Carbon, Motor, Ele [Amer 1 Pc]	2
▲	4	1029227	(00000000-)	Vr, Bearing, Ball, Brush Side	1
▲	5	1029228	(00000000-)	Vr, Ring, Brushholder	1
▲	6	391262	(00000000-)	Vr, Brush Kit, Cover [Amer]	4
▲	7	391263	(00000000-)	Vr, Seal, Ring [Amer]	1
▲	8	391264	(00000000-)	Vr, Bearing, Gearbox, Side [Amer]	1
▲	9	391265	(00000000-)	Vr, Bearing, Motor Side [Amer]	1
▲	10	391467	(00000000-)	Vr, Box, Ele, Connection	1
▲	11	391468	(00000000-)	Vr, Cover, Ele, Connection	11
▲	12	372867	(00000000-)	Vr, Armature	1
▲	13	1029218	(00000000-)	Vr, Screw, Mount, Wheel	8
▲∇	14	9008896	(00000000-)	Brake Kit, W/Connector	1
▲▲	15	78950	(00000000-)	Connector, Fem, 2cav, Mp280 Sealed	1
▲▲	16	78952	(00000000-)	Lock, Secondary, 2cav, Mp280 Sealed	1
▲▲	17	25837	(00000000-)	Terminal, Fem, Mp280, Sealed, 22- 20ga	2
▲▲	18	25830	(00000000-)	Seal, Wire, 18- 22ga [Wp / Mp280 Sealed]	2
▲▲	19	372870	(00000000-)	Vr, Disc, Brake (Set Includes Spline)	1
▲▲	20	372871	(00000000-)	Vr, Adapter, Brake, Spl (NLA - Replaced By Set 372870)	1
▲	21	372872	(00000000-)	Vr, Sleeve, Rbr	1
▲	22	372877	(00000000-)	Vr, Guide, Brushholder, Slip Ring [Amer	1
▲	23	372874	(00000000-)	Vr, Bearing, Steering	1
▲	24	391259	(00000000-)	Vr, Tire, Solid, 250mm X 90mm Red	1
▲	25	130161	(00000000-)	Plug, Hole, Rnd, 0.88d, Blk	1
▲	26	9010971	(00000000-)	Vr, Flange, Brake, T7	1

∇ ASSEMBLY

▲ INCLUDED IN ASSEMBLY

STEERING CONTROL BREAKDOWN, 1019724

355193

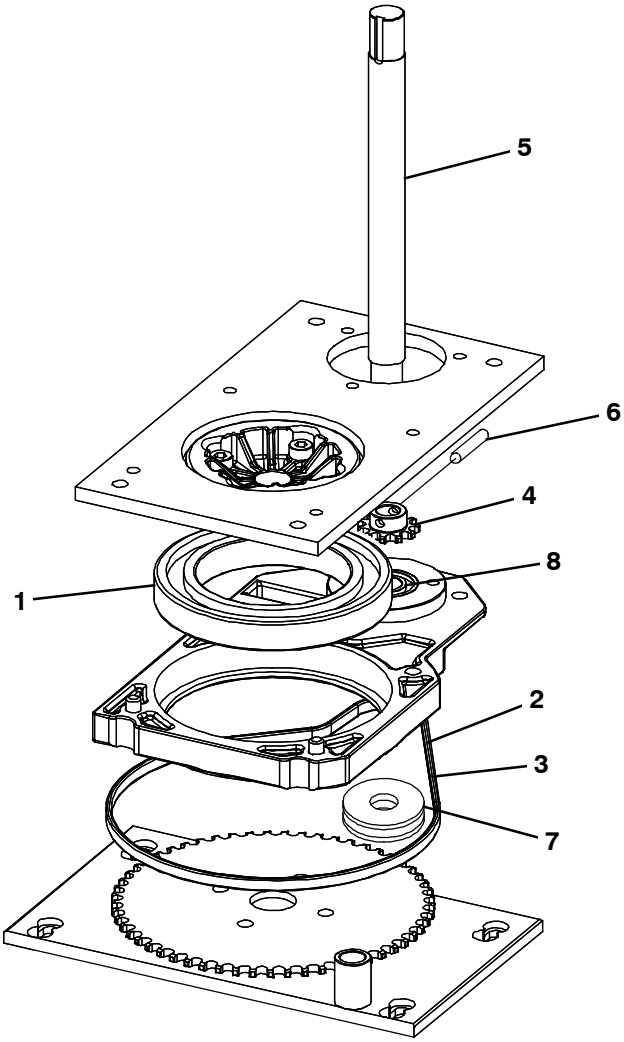

	Ref.	Part No.	Serial Number	Description	Qty.
∇		1019724	(00000000-)	Steer- Control Assy, Wheel Drive	1
▲	1	372874	(00000000-)	Vr, Bearing, Steering	1
▲	2	372875	(00000000-)	Vr, Chain, Steering	1
▲	3	372876	(00000000-)	Vr, Link, Master	1
▲	4	372881	(00000000-)	Vr, Sprocket	1
▲	5	1029229	(00000000-)	Vr, Shaft, Steering	1
▲	6	1038313	(00000000-)	Vr, Pin, Roll, 06mm X 28mml[T7/Ssrsteer]	1
▲	7	1043371	(00000000-)	Vr, Pulley, Tens	1
▲	8	9008719	(00000000-)	Vr, Bearing [6003 2rs]	2

∇ ASSEMBLY

▲ INCLUDED IN ASSEMBLY