M20
(Gas/LPG)

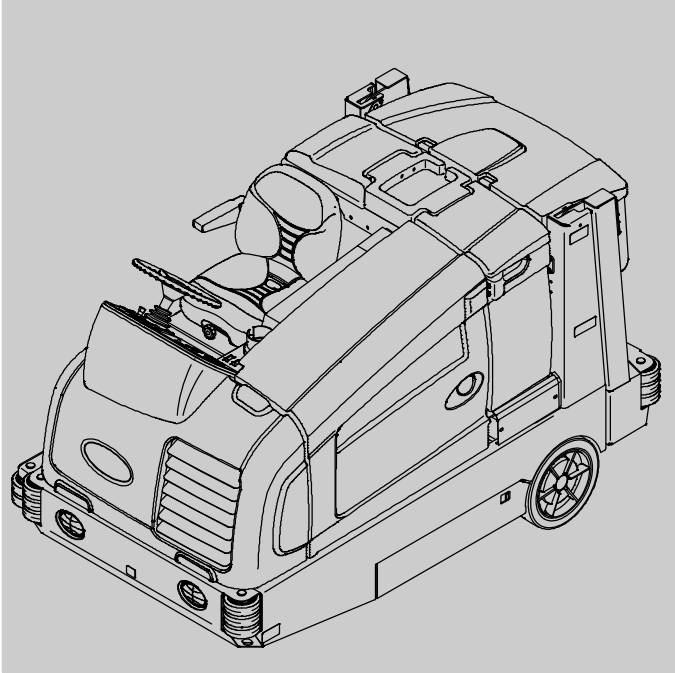

(S/N 008000–)
Scrubber–Sweeper Parts Manual

Foam Scrubbing Technology

The Safe Scrubbing Alternative®
ES® Extended Scrub System
Tennant*True®* *Parts*
Hygenic® Fully Cleanable Tanks
FloorSmart® Integrated Cleaning System
IRIS® a Tennant Technology
Pro–Panel™
Insta–Fit™ Adapter

An ORBIO™ Technology

North America / International

For the latest Parts manuals and other language Operator manuals, visit:

www.tennantco.com/manuals

9016001
Rev. 08 (7-2022)

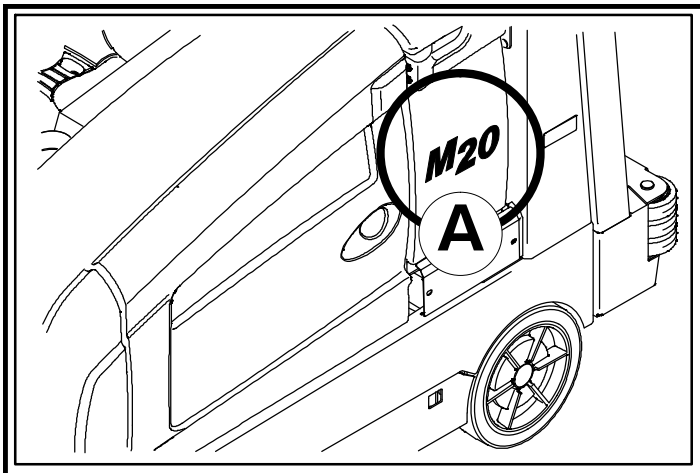

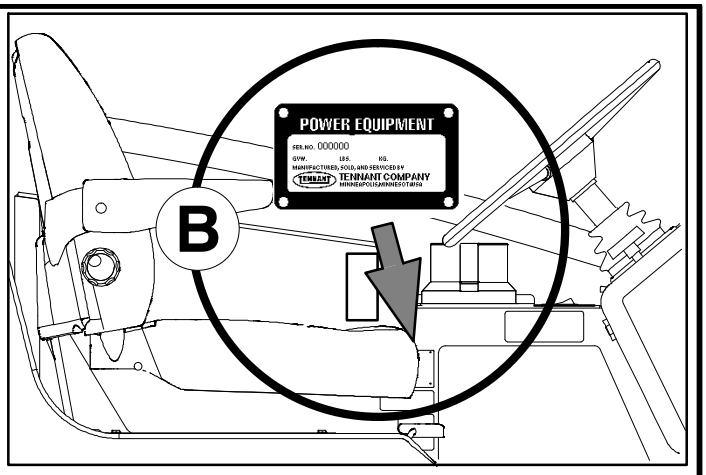

Ref	Part No.	Serial Number	Description	Qty.
1	82681	(000000–)	Bracket Wldt, Lpg Mount	1
▽ 2	63810	(000000–)	Latch Assy, Lpg Tank Mtg, W/Nut	4
▲ 3	51839	(000000–)	Nut Adjustable, Lpg Tank Mtg	2
4	49263	(000000–)	Tie, Cable	3
5	82556	(000000–001039)	Bracket, Vaporizer	1
6	54930	(000000–)	Vaporizer, LPG	1

D

C

EN

HOW TO ORDER PARTS – See diagram above

Only use TENNANT Company supplied or equivalent parts. Parts and supplies may be ordered online, by phone, by fax or by mail.

Follow the steps below to ensure prompt delivery.

1. **(A)** Identify the machine model.
2. **(B)** Identify the machine serial number from the data plate.
3. **(C)** Ensure the proper serial number is used from the parts list.
4. Identify the part number and quantity. Do not order by page or reference numbers.
5. Provide your name, company name, customer ID number, billing and shipping address, phone number and purchase order number.
6. Provide detail shipping instructions.

(D) ▽ – Identifies an assembly
▲ – Identifies parts included in assembly

Please fill out at time of installation for future reference.

Model No. – _____

Serial No. – _____

Machine Options – _____

Sales Rep. – _____

Sales Rep. phone no. – _____

Customer ID Number – _____

Installation Date – _____

Tennant Company
10400 Clean Street
Eden Prairie, MN 55344–2650
Phone: (800) 553–8033 or (763) 513–2850
www.tennantco.com

Thermo–Sentry, Touch–N–Go, 1–STEP, Clean–Wedge, Variable Drain Valve, EasyOpen, Grip–N–Go, MaxPro2, Dura–Track, SmartRelease, InstantAccess, Duramer, FaST–PAK, ErgoSpace and Lower Total Cost of Ownership are trademarks of Tennant Company.

Specifications and parts are subject to change without notice.

Original Information, copyright © 2016, 2017, 2018, 2019, 2020, 2021, 2022 TENNANT Company, Printed in U.S.A.

CN

如何订购部件 – 参见下表

仅使用 TENNANT 公司提供的或同等部件。部件和供应可以在线订购，通过电话、传真或邮件订购。

请遵循下面的步骤确保及时交付。

1. (A) 确定机器型号。
2. (B) 从数据标签确定机器序列号。
3. (C) 确保使用部件列表中的正确序列号。
4. 确定部件号和数量。
   不要按页面或参考编号订购。
5. 提供您的姓名、公司名称、客户 ID 号、付帐和送货地址、电话号码和采购单编号。
6. 提供详细的送货说明。

(D) ▽ – 确定组件
▲ – 确定组件中包含的组件

请在安装时填写供未来参考。

型号 – _____

序列号 – _____

机器选项 – _____

销售代表- _____

销售代表电话号码 – _____

客户 ID 编号 – _____

安装日期 – _____

ES

CÓMO SOLICITAR PIEZAS – Consulte el diagrama anterior.

Utilice sólo las piezas suministradas por TENNANT Company o piezas equivalentes. Puede solicitar las piezas a través de internet, por teléfono, por fax o por correo.

Siga los siguientes pasos para que la entrega sea rápida.

1. **(A)** Indique el modelo de máquina.
2. **(B)** Indique el número de serie de la etiqueta de datos.
3. **(C)** Asegúrese de que indica el número de serie correcto de la lista de piezas.
4. Indique la cantidad y el número de la pieza.
   No realice el pedidoindicando el número de página o el de referencia.
5. Incluya su nombre, el nombre de la empresa, el ID de cliente, las direcciones de envío y facturación, el número de teléfono y el número del pedido de compra.
6. Facilite instrucciones de envío.

(D) ▽ – identifica un conjunto
▲ – identifica piezas de un conjunto

Rellene estos datos cuando realice la instalación para utilizarlos como referencia en el futuro.

Nº modelo – _____

Nº serie – _____

Opciones de la máquina – _____

Vendedor – _____

Nº teléfono vendedor – _____

Nº cliente – _____

Fecha de instalación – _____

FR

COMMENT COMMANDER DES PIÈCES DÉTACHÉES – Voir le schéma ci-dessus.

Utilisez uniquement des pièces fournies par la société TENNANT ou équivalentes. Les pièces et fournitures peuvent être commandées en ligne, par téléphone, fax, ou par courrier.

Suivez les étapes ci-dessous pour assurer une livraison rapide.

1. **(A)** Identifiez le modèle de la machine.
2. **(B)** Identifiez le numéro de série de la machine, à partir de l'étiquette signalétique.
3. **(C)** Assurez-vous que le numéro de série correct est utilisé à partir de la liste de pièces détachées.
4. Identifiez le numéro de pièce et la quantité. Ne commandez pas par page ou numéros de référence.
5. Fournissez votre nom, le nom de votre société, votre numéro d'identification de client, l'adresse de facturation et d'expédition, le numéro de téléphone et le numéro du bon de commande.
6. Fournissez des instructions d'expédition détaillées.

(D) ▽ – identifie un assemblage
▲ – identifie les pièces composant l'assemblage

A remplir au moment de l'installation à titre de référence.

Nº du modèle – _____

Nº de série – _____

Options de la machine – _____

Agent commercial – _____

Nº tél. de l'agent commercial – _____

Numéro d'identification client – _____

Date d'installation – _____

JP

パーツの発注方法 ?上記の図を参照してください

TENNANT社製のパーツまたは同等品のみをお使いください。
パーツやサプライ品のご注文は、オンライン、電話、FAX、または手紙でお願いいたします。
確実にお届けできるように、以下の情報お知らせください。

1. (A) 製品のモデル名をお知らせください。
2. (B) 製品のデータラベルに印刷されているシリアル番号をお知らせください。
3. (C) パーツリストを参照して、シリアル番号が正しいかご確認ください。
4. パーツ番号と数量をお知らせください。マニュアル/カタログのページ番号や参照番号でのご注文はご遠慮ください。
5. お客様のお名前、会社名、顧客ID番号、請求/発送先住所、電話番号、注文書番号をお知らせください。
6. 発送に関するご希望があれば、明記してください。

(D) ▽ – アセンブリを示します
▲ – アセンブリに含まれるパーツを示します

後日確認できるように、設置時に記入してください。

モデルNo. – _____

シリアルNo. – _____

製品のオプション– _____

販売代理店 – _____

販売代理店の電話番号 – _____

顧客ID番号 – _____

設置日 – _____

General Recommended Maintenance Items

	Ref.	Part No.	Serial Number	Description	Qty.
▽		9002555	(008000–)	Maint Kit, Gas, 800hr[M20/T20]	1
▲		31613	(008000–)	Strainer, Hyd, 25 Gpm 100 Mesh	1
▲		25122	(008000–)	Cap, Breather, Hyd, 2.4 Ds	1
▲		1021579	(008000–)	Filter Assy, Hyd, 10mic	1
▲		372440	(008000–)	Filter, Fuel [Gm 1.6l/3.0l]	1
▽		9007381	(008000–)	Maint Kit, 800hr [M20/T20/M30 Lpg 2010]	1
▲		31613	(008000–)	Strainer, Hyd, 025gpm 100mesh 03psi	1
▲		25122	(008000–)	Cap, Breather, Hyd, 2.4 Ds	1
▲		1021579	(008000–)	Filter Assy, Hyd, 10mic	1
▲		9007380	(008000–)	Filter Kit, Fuelock, Lpg	1
		393982	(006000–)	Element, Fltr, Oil, Spin–On (Mits)	1
		1048295AM	(008000–)	Filter, Panl, Syn, 4.2 X 20.0 X 30.0	1
		1027290	(008000–)	Filter, Soltn, 20mesh, Pm12 3.1d 02.6l	1
		87866	(008000–)	Key, Ignition [Set Of 2]	1
		10137	(008000–)	Battery, Wet, 12vdc 0475cca	1
		20833	(008000–)	Wheel, 3.0d 1.38w 0.50b	2
		1033644	(008000–)	Belt, Ribbed, 38.5l	1
		1024586	(008000–)	Skirt, Neo, .06, 06.85w 27.95l, 08 Hole	2
		1019295	(008000–)	Skirt, Neo, .18, 10.37w 27.95l, 12 H&S	2
		1020166	(008000–)	Skirt, Neo, .06, 12.00w 45.88l, 07 Hole	1
		1022009	(008000–)	Skirt, Neo, .06, 06.38w 40.86l, 06 Hole	1
		1022007	(008000–)	Skirt, Rbr, .37, 04.50w 40.94l, 06 Hole	1
		1017868	(008000–)	Blade, Sqge, Front [Linard]	1
		1031331	(008000–)	Blade, Sqge, Rear, Linatex	1
		83874	(008000–)	Gasket, Sqge	2
		1031011	(008000–)	Blade, Sqge, 37.08l Linatex	2
		1027719	(008000–)	Blade, Sqge, Front, 49.59l Pyu	1
		1031945	(008000–)	Blade, Sqge, Rear, 53.78L Pyu	1
		1031823	(008000–)	Blade, Sqge, .38 3.55w 038.3l, Ure	2
		9014160	(008000–)	Plug, Spark	4
		1059091	(008000–)	Blade, Sqge, Side Brush, Urethane	1
		1059092	(008000–)	Blade, Sqge, Side Brush, Urethane	1
		1046980	(008000–)	Blade, Sqge, Side Brush, Linatex	1
		1047238	(008000–)	Blade, Sqge, Side Brush, Linatex	1
		16411	(008000–)	Paint, Airdry, Off–White, 12oz	1
		16412	(008000–)	Paint, Airdry, Teal, 12oz, Solid	1
		377540	(008000–)	Paint, Airdry, Blk, 12oz	1
		377538	(008000–)	Paint, Airdry, Gray, 12oz [Enamel]	1
		377537	(008000–)	Paint, Airdry, Iron Gray,12oz[Pwdr Coat]	1
		1057710	(008000–)	Oil, Hyd [El, Iso 100, 01gal]	1
		1057711	(008000–)	Oil, Hyd [El, Iso 100, 05gal]	1
		1069019	(008000–)	Oil, Hyd [El, Iso 68, 01gal]	1
		1069020	(008000–)	Oil, Hyd [El, Iso 68, 05gal]	1
		1057707	(008000–)	Oil, Hyd [El, Iso 32, 01gal]	1
		1057708	(008000–)	Oil, Hyd [El, Iso 32, 05gal]	1

SECTION 2

Contents **Page**

Fig. 1 – Brushes, Replacement, Scrub Head 2-2
Fig. 2 – Brushes, Replacement, Side Brush 2-3
Fig. 3 – Main Frame Group 2-4
Fig. 4 – Operator Station Group 2-6
Fig. 5 – Operator Station Insulation Group . 2-8
Fig. 6 – Instrument Panel Group 2-10
Fig. 7 – Seat Group 2-12
Fig. 8 – Steering Group 2-14
Fig. 9 – Front Cover Group 2-16
Fig. 10 – Engine Cover Group 2-18
Fig. 11 – Mitsubishi Engine and Mount Group, Gas 2-20
Fig. 12 – Mitsubishi Engine and Mount Group, LPG 2-22
Fig. 13 – Mitsubishi Engine EFI Group, Gasoline 2-24
Fig. 14 – Mitsubishi Engine EFI Group, LPG 2-26
Fig. 15 – Mitsubishi Engine Air Cleaner Group, Gasoline 2-28
Fig. 16 – Mitsubishi Engine Air Cleaner Group, LPG 2-30
Fig. 17 – Mitsubishi Engine Alternator and Fan Group 2-32
Fig. 18 – Mitsubishi Engine Muffler Group . 2-34
Fig. 19 – Mitsubishi Engine Radiator and Mount Group 2-36
Fig. 20 – Mitsubishi Engine Radiator Hose Group 2-38
Fig. 21 – Engine Fuel Tank Group, Gasoline 2-40
Fig. 22 – Engine Fuel Tank Group, LPG . . . 2-42
Fig. 23 – Battery and Electrical Group 2-44
Fig. 24 – Wheel Group, Front Drive 2-46
Fig. 25 – Wheel Group, Rear 2-48
Fig. 26 – Brake Pedal Linkage Group 2-50
Fig. 27 – Directional Pedal Group 2-52
Fig. 28 – Hydraulic Pump Linkage Group . . 2-54
Fig. 29 – Hopper Lift Arms Group 2-56
Fig. 30 – Hopper and Debris Screen Group 2-58
Fig. 31 – Hopper Cover and Dust Filter Group 2-60
Fig. 32 – Hopper Bumper Group 2-62
Fig. 33 – Hopper Door Group 2-64
Fig. 34 – Cylindrical Scrub Brush Drive Group, Left Side 2-66
Fig. 35 – Cylindrical Scrub Brush Drive Group, Right Side 2-68
Fig. 36 – Cylindrical Scrub Brush Head Lift Group 2-70
Fig. 37 – Cylindrical Brush Head Skirt Group 2-72
Fig. 38 – Squeegee Lift Group, Rear 2-74
Fig. 39 – Squeegee Group, Rear 2-76
Fig. 40 – Squeegee Linkage Group, Rear . . 2-78
Fig. 41 – Squeegee Group, Right Side 2-80
Fig. 42 – Squeegee Lift Group, Right Side . 2-82
Fig. 43 – Squeegee Group, Left Side 2-84

Contents **Page**

Fig. 44 – Squeegee Lift Group, Left Side . . 2-86
Fig. 45 – Solution Tank Group 2-88
Fig. 46 – Solution Tank Drain Group 2-92
Fig. 47 – Solution Control Group (008000–014000) 2-94
Fig. 48 – Solution Control Group (014001–) 2-96
Fig. 49 – Recovery Tank Group 2-98
Fig. 50 – Recovery Tank Drain Group 2-100
Fig. 51 – Vacuum Fan Group, Scrubbing . 2-102
Fig. 52 – Vacuum Fan Group, Sweeping . . 2-104
Fig. 53 – Hydraulic Schematic 2-106
Fig. 54 – Hydraulic Hose Group, Steering and Propel 2-108
Fig. 55 – Hydraulic Hose Group, Pump and Vacuum Fans 2-110
Fig. 56 – Hydraulic Hose Group, Brush and Hopper 2-112
Fig. 57 – Hydraulic Hose Group, Squeegee Lift 2-114
Fig. 58 – Hydraulic Pumps Group 2-116
Fig. 59 – Hydraulic Cooler and Tubes Group 2-118
Fig. 60 – Hydraulic Reservoir Group 2-120
Fig. 61 – Hydraulic Valve Group 2-122
Fig. 62 – Electrical Schematic 2-124
Fig. 63 – Electrical Schematic, Gas Engine Harness 2-132
Fig. 64 – Electrical Schematic, LPG Engine Harness 2-134
Fig. 65 – Electrical Wire Harness Group, Main (008000–014000) 2-136
Fig. 66 – Electrical Wire Harness Group, Main (014001–) 2-142
Fig. 67 – Electrical Wire Harness Group, Headlight 2-149
Fig. 68 – Electrical Wire Harness Group, Hopper 2-150
Fig. 69 – Electrical Wire Harness Group, Hopper Cover 2-151
Fig. 70 – Electrical Wire Harness Group, Seat Switch 2-152
Fig. 71 – Electrical Wire Harness Group, Gasoline/LPG Engine 2-153
Fig. 72 – Label Group 2-154

Fig. 1 – Brushes, Replacement, Scrub Head

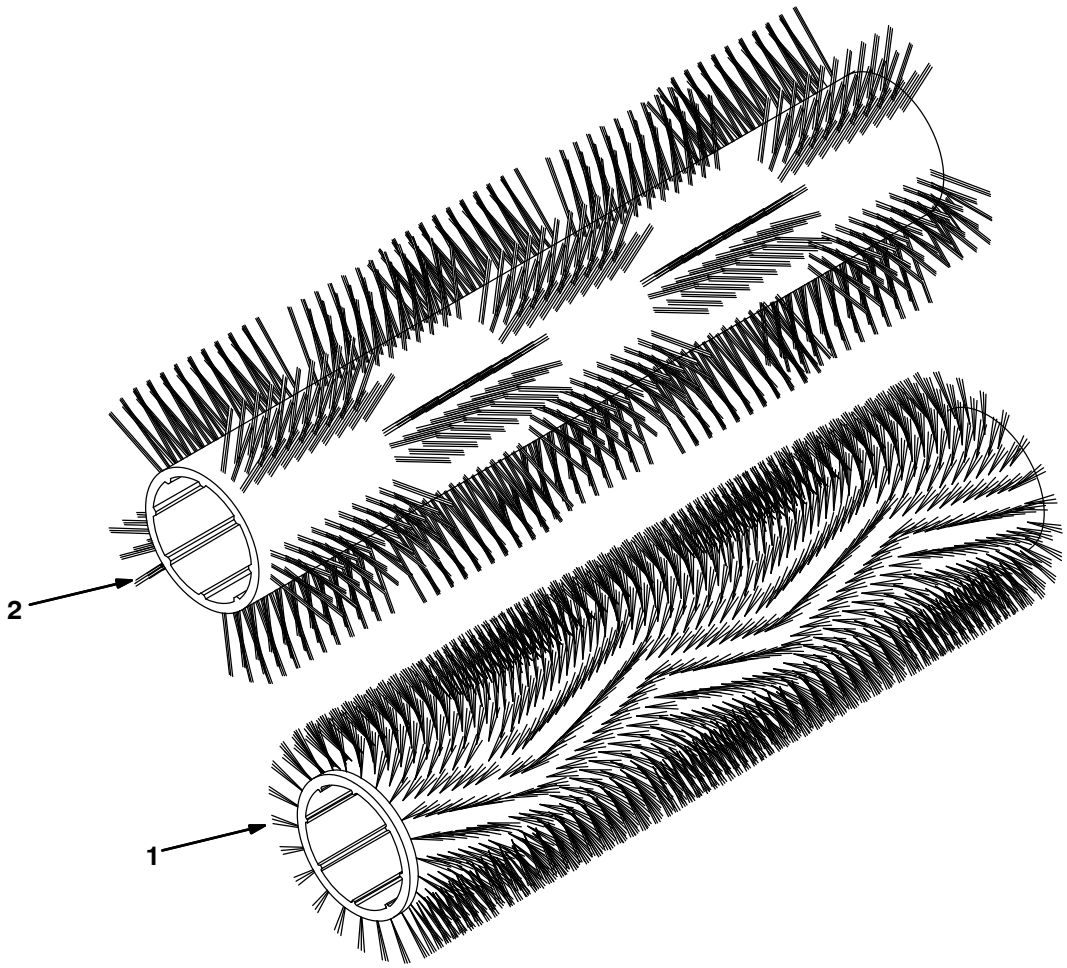

354408 – M20

Ref.	Part No.	Serial Number	Description	Qty.
1	1026223	(008000–)	Brush, Sweep / Scb, 40L, Polypropylene, Spiral	2
1	1252156	(008000–)	Brush, Sweep / Scb, 40L, 24Sr, Super Abrasive, Spiral	2
1	1027697	(008000–)	Brush, Sweep / Scb, 40L, Polyester, Spiral	2
1	1030969	(008000–)	Brush, Sweep / Scb, 40L, Heavy Duty Polypropylene, Spiral	2
2	1040524	(008000–)	Brush, Sweep / Scb, 40L, Window, Polypropylene, Spiral	1
2	1059640	(008000–)	Brush, Sweep / Scb, 40L, Window, Super Abrasive, Spiral	1

Fig. 2 – Brushes, Replacement, Side Brush

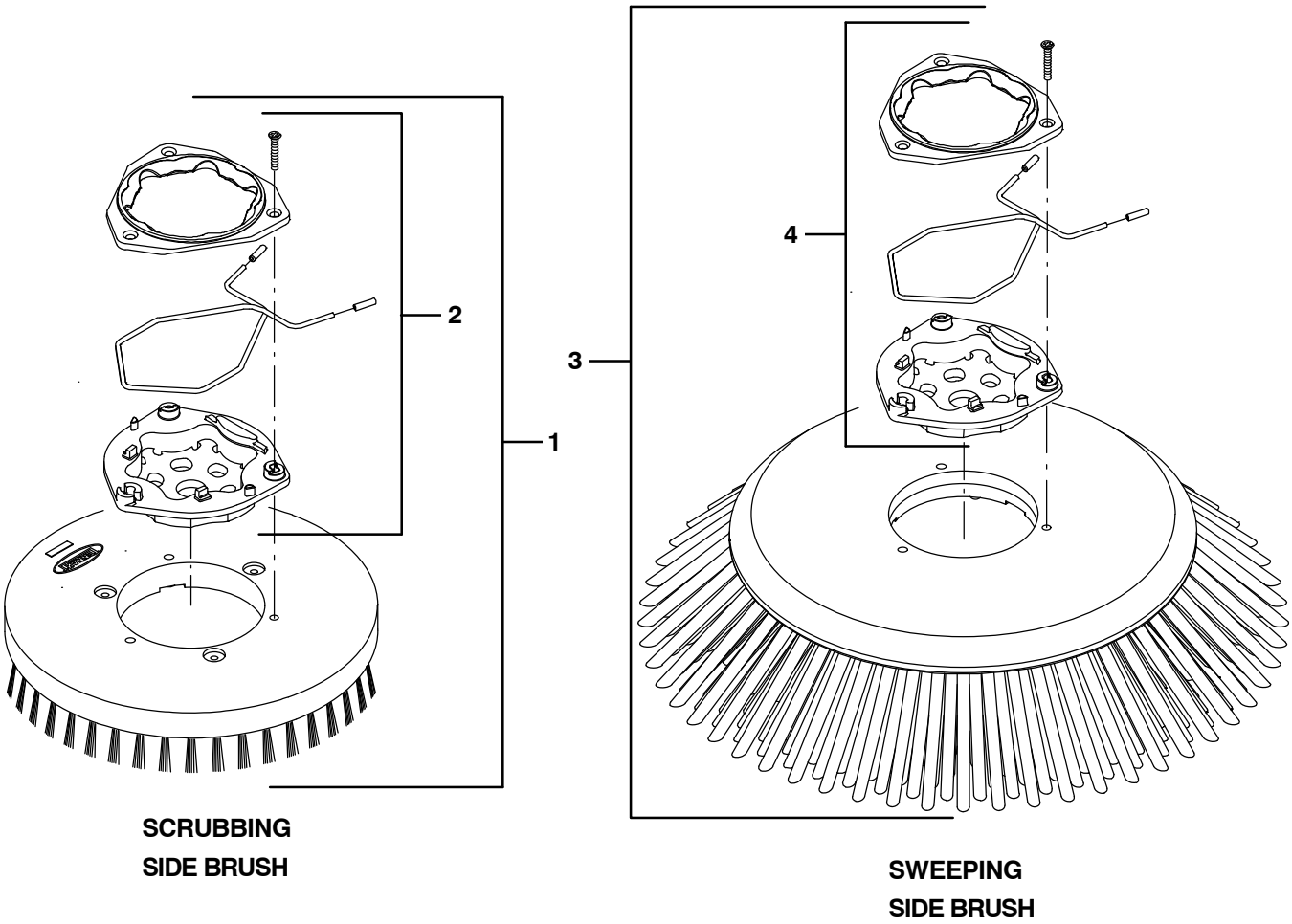

354584 – NA, M20, T20

	Ref.	Part No.	Serial Number	Description	Qty.
▽	1	1220235	(008000–)	Brush Assy, Disk, Scb, 16.0d, Nylon	1
▲	2	9014662	(008000–)	Brush Kit, Hub Assy, Drive, Ci [Hdpe In]	1
▽	1	1220236	(008000–)	Brush Assy, Disk, Scb, 16.0d, Heavy Duty Polypropylene	1
▲	2	9014662	(008000–)	Brush Kit, Hub Assy, Drive, Ci [Hdpe In]	1
▽	1	1221543	(008000–)	Brush Assy, Disk, Scb, 16.0d, Super Abrasive	1
▲	2	9014662	(008000–)	Brush Kit, Hub Assy, Drive, Ci [Hdpe In]	1
▽	3	1220185	(008000–)	Brush Assy, Disk, Swp, 24.0d, Polypropylene	1
▲	4	9014666	(008000–)	Brush Kit, Hub Assy, Drive, Ci [Uhmw]	1

Fig. 3 – Main Frame Group

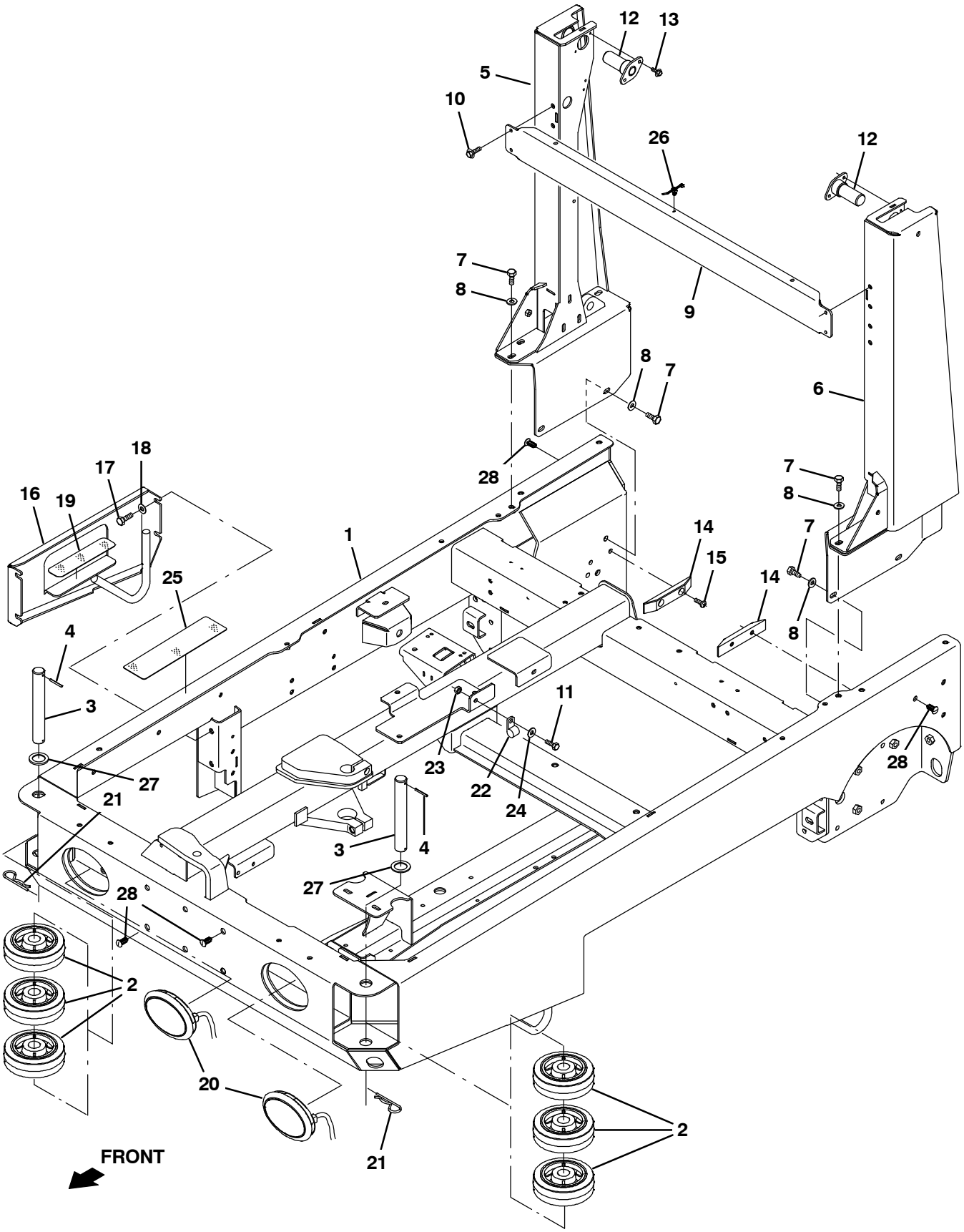

354406 – M20

Fig. 3 – Main Frame Group

Ref.	Part No.	Serial Number	Description	Qty.
1	9002401	(008000–)	Frame Wldt, Main, Replmt [M20 & T20]	1
2	1060130	(008000–)	Wheel, 06.0D 2.00W 1.19B, Gray Rbr	6
3	1053838	(008000–)	Pin, 30mmd X 215mml	2
4	23146	(008000–)	Pin, Roll, .187d X 1.62l, .187/.192	2
5	9002400	(008000–)	Tower, Wldt, Lift, Rh, Replmt [M20]	1
6	9002399	(008000–)	Tower, Wldt, Lift, Lh, Replmt [M20]	1
7	39283	(008000–)	Screw, Hex, M10 X 1.5 X 25, 8.8	10
8	32492	(008000–)	Washer, Flat, 0.38 Std	10
9	1017791	(008000–)	Channel, Upper, Tower, Lift	1
10	1037346	(008000–)	Screw, Hex, M8 X 1.25 X 25, 9.8, Sems	4
11	39277	(008000–)	Screw, Hex, M8 X 1.25 X 25, 8.8	1
12	1019251	(008000–)	Pin Wldt, Pivot, Hppr	2
13	74455	(008000–)	Screw, Hex, M6 X 1.0 X 12, Fmg	4
14	1021327	(008000–)	Block, Guide, Hppr	2
15	367771	(008000–)	Screw, Pan, M8 X 1.25 X 25, Ss	4
16	1027916	(008000–)	Panel Wldt, Filler	1
17	12317	(008000–)	Screw, Hex, M10 X 1.5 X 30, Ss	4
18	01686	(008000–)	Washer, Flat, 0.44b 1.00d .08, Ss	4
19	363458	(008000–)	Tread, Non–Skid, 01.9w 08.0l	1
20	1075367	(008000–)	Headlight, 12Vdc, Oval, Led	2
21	34411	(008000–)	Pin, Cotter, Hair, 1.00d .178 Wir	2
22	53466	(008000–)	Clamp, Cable, Stl, 1.50d X 1.00w, 1hole	1
23	08709	(008000–)	Nut, Hex, Lock, M8 X 1.25, Nl	1
24	32491	(008000–)	Washer, Flat, 0.31, Std	1
25	58819	(008000–)	Tread, Non–Skid, 03.0w 11.6l	1
26	1210807	(008000–)	Wire, Tie [W/.25” Fir Tree Clip]	1
27	1062566	(008000–)	Washer, Flat, 1.26B 1.88D .13, Stl, Pl	2
28	1055605	(008000–)	Plug, Hole, Rnd, 0.38h .4–.7, Blk Nyl	12

Fig. 4 – Operator Station Group

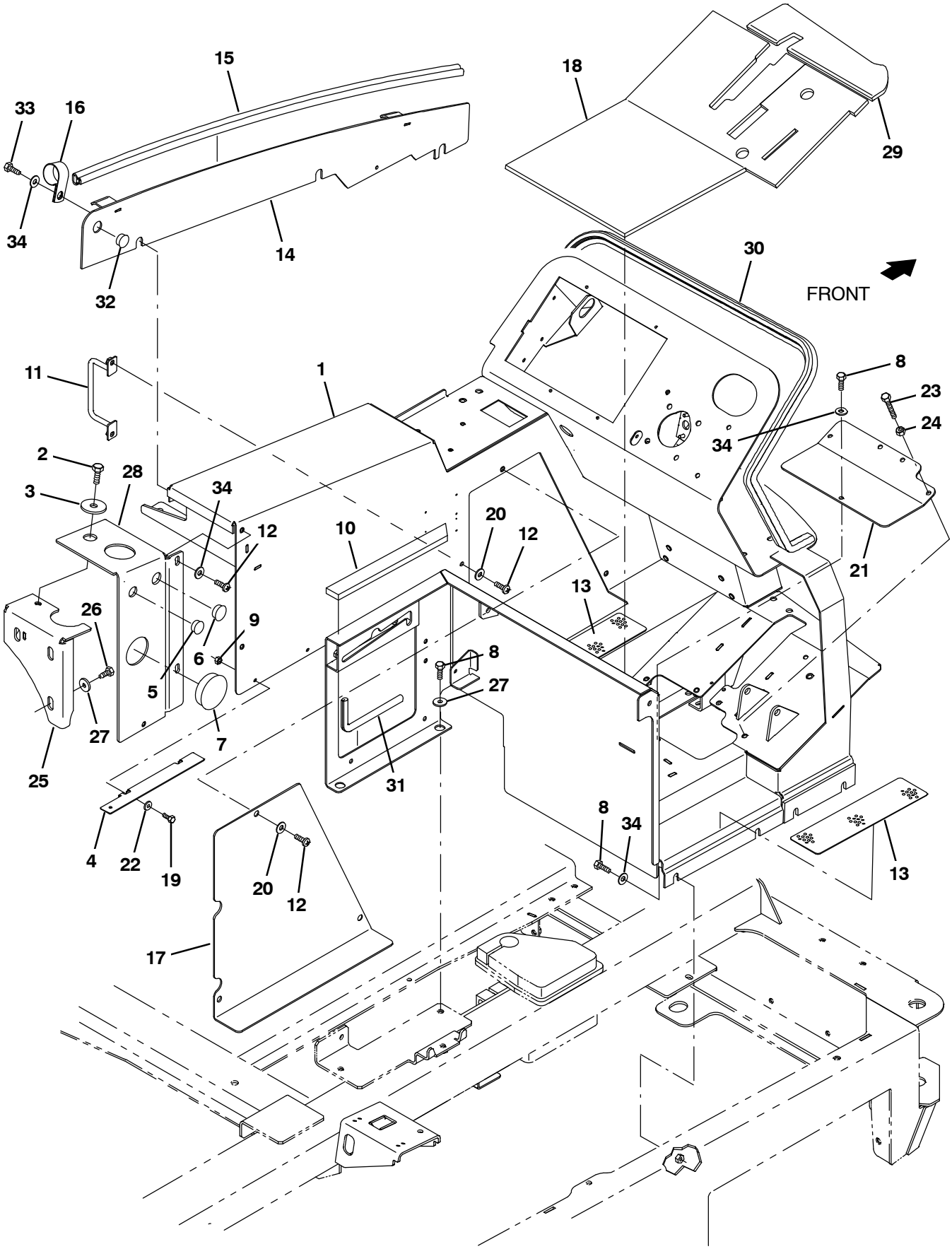

354407 – M20, T20, G/LP, NA

Fig. 4 – Operator Station Group

Ref.	Part No.	Serial Number	Description	Qty.
1	9016324	(008000–)	Panel Wldt, Gas, Replmt	1
1	9016320	(008000–)	Panel Wldt, Gas, Replmt [W/Fast]	1
1	9016321	(008000–)	Panel Wldt, Gas, W/ Es, Replmt	1
1	9016326	(008000–)	Panel Wldt, Gas, Replmt, TJ (Japan only)	1
1	9016329	(008000–)	Panel Wldt, Gas, Replmt, TJ [W/Fast] (Japan only)	1
1	9016332	(008000–)	Panel Wldt, Gas, Replmt, TJ, W/Es (Japan only)	1
1	9016335	(008000–)	Panel Wldt, LPG, Replmt	1
1	9016336	(008000–)	Panel Wldt, LPG, Replmt [W/Fast]	1
1	9016337	(008000–)	Panel Wldt, LPG, Replmt, W/Es	1
1	9016327	(008000–)	Panel Wldt, LPG, Replmt, TJ (Japan only)	1
1	9016330	(008000–)	Panel Wldt, LPG, Replmt, TJ [W/Fast] (Japan only)	1
1	9016333	(008000–)	Panel Wldt, LPG, Replmt, TJ, W/Es (Japan only)	1
2	39283	(008000–)	Screw, Hex, M10 X 1.5 X 25, 8.8	1
3	04414	(008000–)	Washer, Flat, 0.53b 1.88d .12, Stl, Pl	1
4	1047169	(008000–)	Bracket, Mtg, Insulation	2
5	82727	(008000–)	Plug, Hole, Rnd, 0.88h .03–.12, Blk Nyl	1
6	01493	(008000–)	Plug, Hole, Rnd, 1.00h .03–.12, Blk Nyl	1
7	1030017	(008000–)	Plug, Hole, Rnd, 2.50h .03–.25, Blk Nyl	1
8	16931	(008000–)	Screw, Hex, M8 X 1.25 X 20, 8.8	12
9	08708	(008000–)	Nut, Hex, Lock, M6 X 1.00, Nl	2
10	1047295	(008000–)	Seal, Foam, 0.50	1
11	1071616	(008000–)	Bracket Wldt, Mtg, Hose	1
12	1031665	(008000–)	Screw, Pan, M8 X 1.25 X 25, Blk	6
13	58819	(008000–)	Tread, Non–Skid, 03.0w 11.6l	4
14	1035832	(008000–)	Panel Wldt, Adj [2007]	1
15	1030593	(008000–)	Seal, Afmkt, Bulb, 90, 0.75d F/11ga 08ft	1
16	53466	(008000–)	Clamp, Cable, Stl, 1.50d X 1.00w, 1h	5
17	1021834	(008000–)	Panel, Access, Door	1
18	1027218	(008000–)	Mat, Floor	1
19	06942	(008000–)	Screw, Hex, M6 X 1.00 X 16, 8.8	2
20	39349	(008000–)	Washer, Flat, 0.31 Sae	5
21	1022699	(008000–)	Panel, Access, Floor	1
22	32490	(008000–)	Washer, Flat, 0.25, Std	2
23	363976	(008000–)	Screw, Hex, M8 X 1.25 X 60, 8.8, Fl	1
24	39311	(008000–)	Nut, Hex, Std, M8 X 1.25	1
25	1035997	(008000–)	Bracket Wldt, Mtg, Tank	1
26	09740	(008000–)	Screw, Hex, M8 X 1.25 X 20, Ss	3
27	1017218	(008000–)	Washer, Flat, 0.32b 1.00d .12, Ss	5
28	1033975	(008000–)	Bracket, Mtg	1
29	1027267	(008000–)	Mat, Floor	1
30	1030593	(008000–)	Seal, Afmkt, Bulb, 90, 0.75d F/11ga 08ft	1
31	1020168	(008000–)	Molding, Afmkt, Trim, Pvc, .08 .11, 1ft	1
32	80288	(008000–)	Plug, Hole, Rnd, 0.81h, Blk	1
33	39277	(008000–)	Screw, Hex, M8 X 1.25 X 25, 8.8	6
34	32491	(008000–)	Washer, Flat, 0.31, Std	17

Fig. 5 – Operator Station Insulation Group

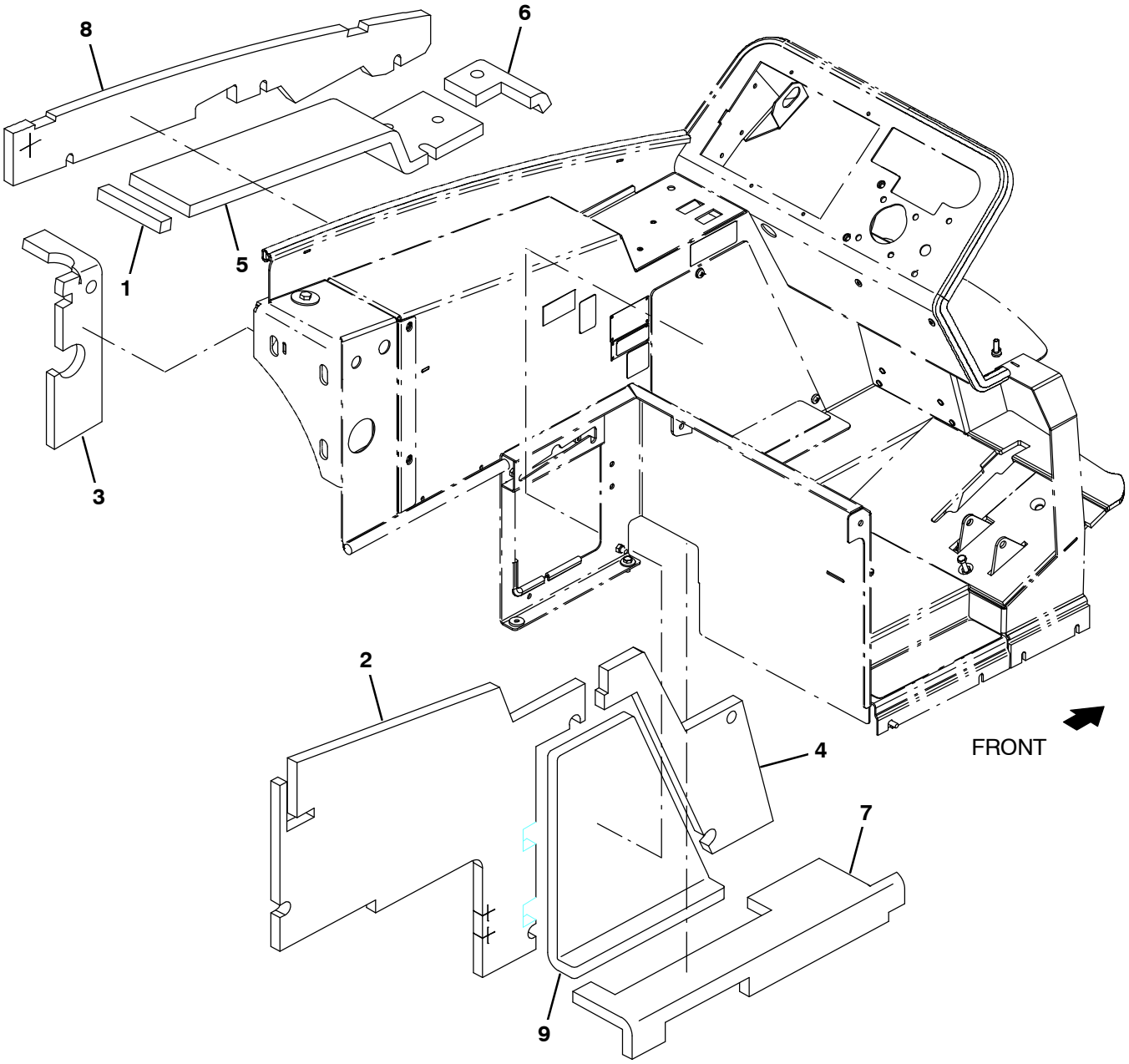

354409 – M20

Fig. 5 – Operator Station Insulation Group

Ref.	Part No.	Serial Number	Description	Qty.
1	1034769	(008000–)	Insulation, Flame–retardant, 0.75–0.88	1
2	1034765	(008000–)	Insulation, Flame–retardant, 0.75–0.88	1
3	1040841	(008000–)	Insulation, Flame–Retardant, 0.75–0.88	1
4	1023464	(008000–)	Insulation, Flame–Retardant, 0.75–0.88	1
5	1034764	(008000–)	Insulation, Flame–retardant, 0.75–0.88	1
6	1034766	(008000–)	Insulation, Flame–retardant, 0.75–0.88	1
7	1034768	(008000–)	Insulation, Flame–retardant, 0.75–0.88	1
8	1034770	(008000–)	Insulation, Flame–retardant, 0.75–0.88	1
9	1023569	(008000–)	Insulation, Flame–Retardant, 0.75–0.88	1

Fig. 6 - Instrument Panel Group

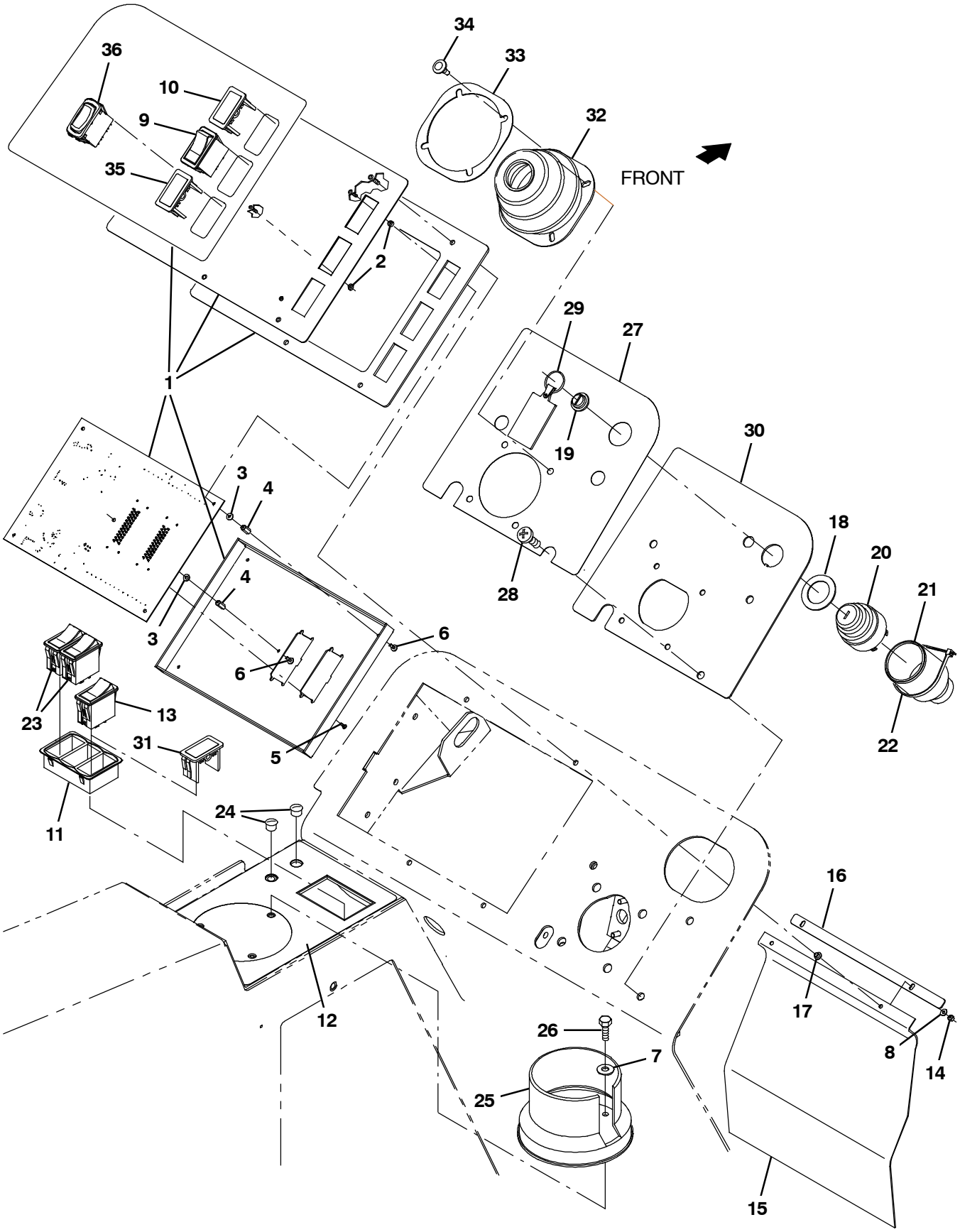

356674 - M20, G/LP

Fig. 6 - Instrument Panel Group

	Ref.	Part No.	Serial Number	Description	Qty.
▽	1	1223896	(008000-)	Panel Assy, Instmt, W/ Label, Afmkt	1
▲	2	1006808	(008000-)	Spacer, Rnd, .125l, Alm	5
▲	3	1008663	(008000-)	Washer, Flat, 0.15b 0.31d .05, Nyl	5
▲	4	1022472	(008000-)	Stand- Off, Hex, M3 X M14, Alm	5
▲	5	1008240	(008000-)	Screw, Pan, #04- 24 X 0.50l, Hi - Low	5
▲	6	1022905	(008000-)	Screw, Pan, M3 X 6, [Seelscrew]	8
	7	32490	(008000-)	Washer, Flat, 0.25, Std	3
	8	19065	(008000-)	Washer, Flat, 0.19b 0.44d .05, Pl, 08	4
	9	392171	(008000-)	Switch, Rocker, Dpdt, On / Off / On	1
	10	398501	(008000-)	Plug, Hole, Rt, Rocker Switch, .87 X 1.7	1
	11	1029951	(008000-)	Bezel, Switch [3 Gang]	1
	12	1223906	(008000-)	Label, Switch, Rocker [Drago]	1
	13	1224603	(008000-)	Switch, Rocker, Mom, Led (Dry Dust Control Only)	1
	14	16968	(008000-)	Nut, Hex, Lock, #08- 32, Nl	4
	15	1028769	(008000-)	Flap, Battery	1
	16	1028772	(008000-)	Bar, Flat, Ss 0.06, 00.50 X 10.00l, 2sl	1
	17	1029362	(008000-)	Washer, Shld, Nyl [8- 32]	4
	18	73736	(008000-)	Washer, Flat, 1.15b 1.75d .08, Stl	1
	19	382516	(008000-)	Boot, .63id .29l .90w	1
▽	20	87536	(008000-)	Switch, Ignition [Ku]	1
▲		87866	(008000-)	Key, Ignition [Set of 2]	1
	21	383165	(008000-)	Boot, Switch, Ignition	1
	22	49266	(008000-)	Tie, Cable, Nyl, 07.3l .19w 1.8 Max D	2
	23	398508	(008000-)	Switch, Rocker, Dpdt, Mom / Off / Mom	2
	24	56992	(008000-)	Plug, Hole, Rnd, 0.50h .03- .12, Blk Nyl	2
	25	223599	(008000-)	Cup Holder, Rwk	1
	26	06943	(008000-)	Screw, Hex, M6 X 1.00 X 20, 8.8	3
	27	1223903	(008000-)	Label, Instrument Panel, Rh, [Drago]	1
	28	1031665	(008000-)	Screw, Pan, M8 X 1.25 X 25, Blk	4
	29	1075003	(008000-)	Keychain, Rectangle, Parts & Service	1
	30	1223897	(008000-)	Plate, Instrument, Rh [Drago]	1
	31	398501	(010900-)	Plug, Hole, Rt, Rocker Switch, .87 X 1.7 (Wet Dust Control Only)	1
	32	70622	(008000-)	Boot, Bellows, 3.1l 4.4w 2.8h 1hole, Neo	1
	33	70623	(008000-)	Retainer, Boot, Steering Column	1
	34	72970	(008000-)	Rivet, Plstc, .250d X 0.90	4
	35	398501	(014001-)	Plug, Hole, Rt, Rocker Switch, .87 X 1.7	1
	36	1255914	(014001-)	Switch, Rocker [Mom,Off,Mom, Dual Led] (Detergent Metering Option Only)	1

Fig. 7 – Seat Group

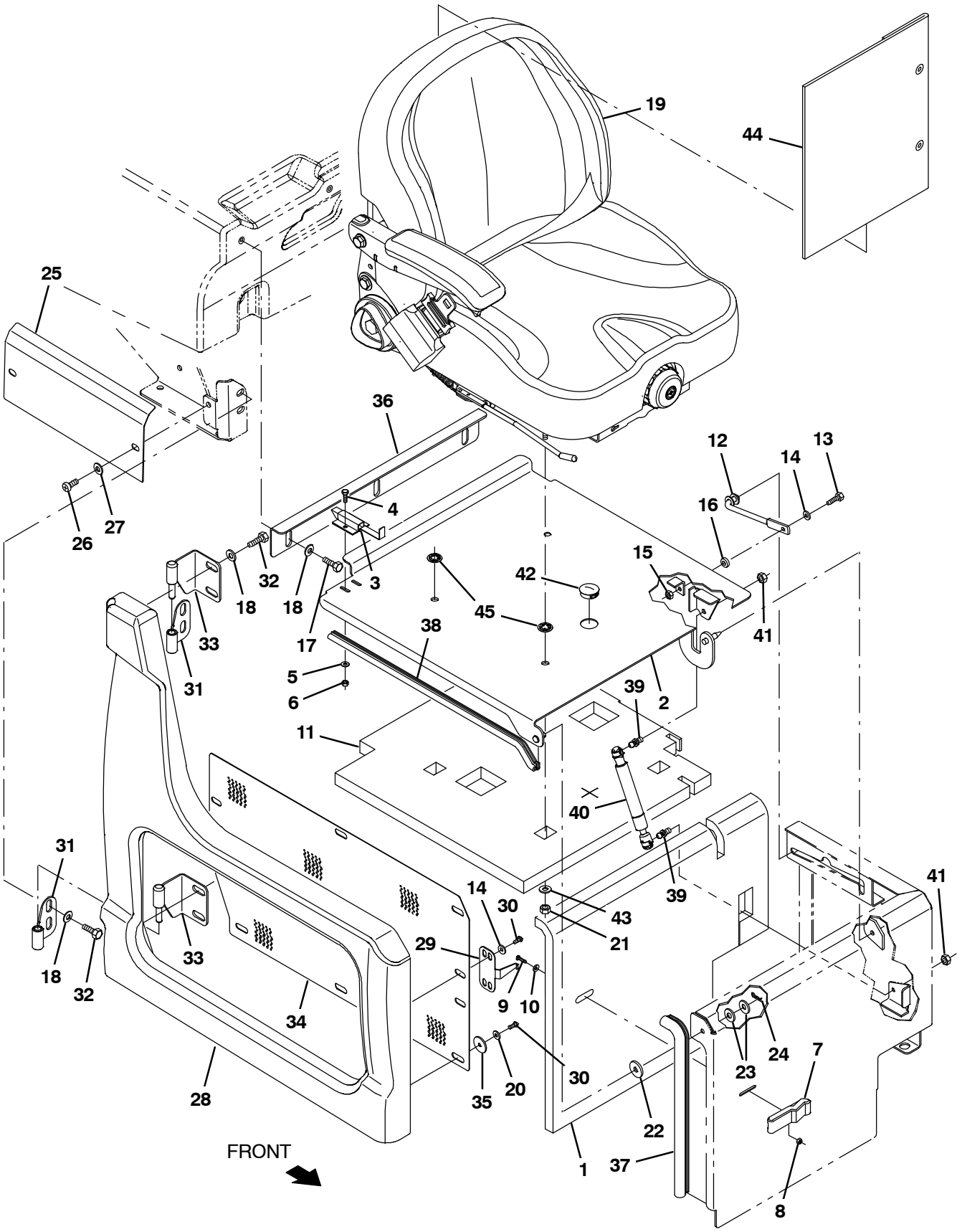

354411 – M20, NA

Fig. 7 – Seat Group

Ref.	Part No.	Serial Number	Description	Qty.
1	1034767	(008000–)	Insulation, Flame–retardant, 0.75–0.88	1
2	1019228	(008000–)	Plate Wldt, Seat	1
3	1025736	(008000–)	Latch	1
4	09252	(008000–)	Screw, Hex, M5 X 0.8 X 20, 8.8	2
5	19066	(008000–)	Washer, Flat, #10	2
6	06549	(008000–)	Nut, Hex, Lock, M5 X 0.8, Nl	2
7	49800	(008000–)	Latch	1
8	02850	(008000–)	Nut, Hex, Lock, M4 X 0.7, Nl	4
9	06929	(008000–)	Screw, Pan, M4 X 0.7 X 25, 4.8	4
10	19065	(008000–)	Washer, Flat, #08	2
11	1023499	(008000–)	Insulation, Flame–Retardant, 1.0	1
12	223080	(008000–)	Arm Wldt, Safety, Sppt, Seat, .38d 06.5d	1
13	06943	(008000–)	Screw, Hex, M6 X 1.0 X 20, 8.8	1
14	32483	(008000–)	Washer, Flat, 0.25 Sae	9
15	08708	(008000–)	Nut, Hex, Lock, M6 X 1.0, Nl	1
16	21851	(008000–)	Spacer, Plstc, Ny	1
17	09740	(008000–)	Screw, Hex, M8 X 1.25 X 20, Ss	3
18	1017218	(008000–)	Washer, Flat, 0.32b 1.00d .12, Ss	11
19	9018721	(008000–)	Seat, Deluxe, Replmt [M20/T20/M30] (See Breakdowns)	1
20	19066	(008000–)	Washer, Flat,.25b 0.56d .05, Pl, 10	6
21	32983	(008000–)	Nut, Hex, Lock, .31–18, Nl	4
22	364749	(008000–)	Washer, Flat, 0.41b 1.25d .12, Pye	1
23	32492	(008000–)	Washer, Flat, 0.38 Std	2
24	08085	(008000–)	Pin, Cotter, Hair, 0.31d .058 Wir	1
25	1022005	(008000–)	Cover, Lower	1
26	1031665	(008000–)	Screw, Pan, M8 X 1.25 X 25, Blk	2
27	39349	(008000–)	Washer, Flat, 0.31 Sae	2
28	1018776	(008000–)	Shroud, Seat	1
29	1026825	(008000–)	Bracket, Latch, Shrd, Seat	1
30	09200	(008000–)	Screw, Pan, M5 X 0.8 X 12, Ss	8
31	1024464	(008000–)	Hinge Wldt, Shrd, Rh	2
32	16931	(008000–)	Screw, Hex, M8 X 1.25 X 20, 8.8	8
33	1024425	(008000–)	Hinge Wldt, Shrd, Rh	2
34	1025916	(008000–)	Grill, Side	1
35	41178	(008000–)	Washer, Flat, 0.25 Fendr	6
36	1020487	(008000–)	Bracket, Seat, Adj	1
37	1030588	(008000–)	Seal, Afmkt, Bulb, 90, 0.75d F/11ga 02ft	1
38	1031206	(008000–)	Seal, Afmkt, Bulb, 90, 0.50d, 02ft	1
39	58494	(008000–)	Stud, Ball, .39d .31–16, Gasspring	2
40	1258921	(008000–)	Gasspring, 135lb, 03.15strk	1
41	01760	(008000–)	Nut, Hex, Lock, .31–18, Nl, Thin	2
42	76888	(008000–)	Plug, Hole, Rnd, 1.25H .03–.12, Blk Nyl	1
43	32491	(008000–)	Washer, Flat, 0.31, Std	4
44	68275	(008000–)	Pouch (OPTION)	1
45	1077073	(008000–)	Nut, Push, Bolt Retention, Stl,5/16 Thrd	4

Fig. 8 – Steering Group

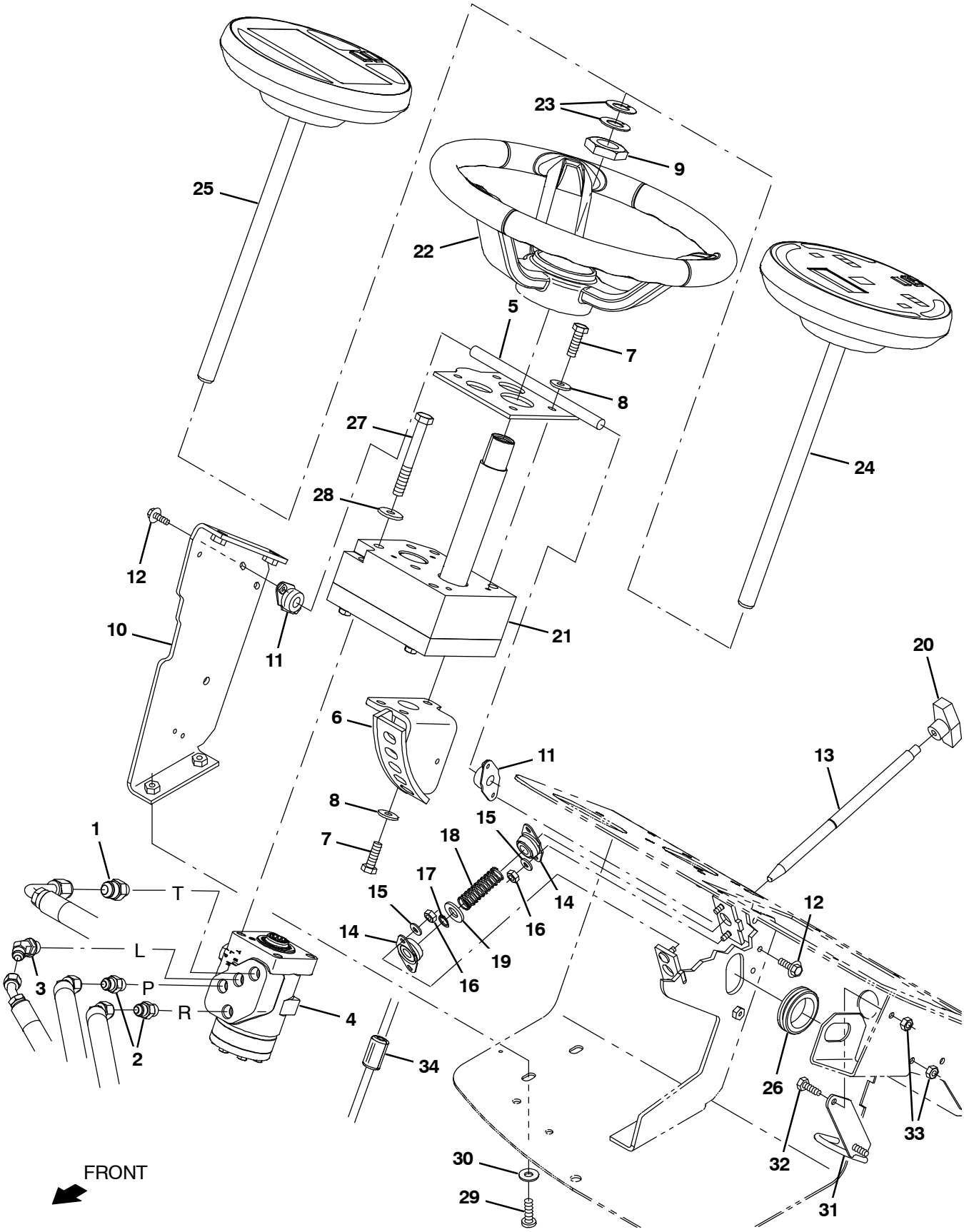

356676 – M20

Fig. 8 – Steering Group

Ref.	Part No.	Serial Number	Description	Qty.
1	56835	(008000–)	Fitting, Hyd, Str, Jm08/Om06	1
2	56690	(008000–)	Fitting, Hyd, Str, Jm06/Om06	2
3	47522	(008000–)	Fitting, Hyd, E45, Jm06/Om06	1
4	1024260	(008000–)	Steer–Control, Hyd05, 06.1 2030 (See Breakdowns)	1
5	1223514	(008000–)	Plate, Wldt, Mtg, Housing	1
6	1232054	(008000–)	Bracket Wldt, Steering, Tilt	1
7	16931	(008000–)	Screw, Hex, M8 X 1.25 X 20, 8.8	7
8	32490	(008000–)	Washer, Flat, 0.25, Std	7
9	1059073	(008000–)	Nut, Hex, Jam, 1.12–12	1
10	1223511	(008000–)	Bracket Wldt, Steering, Tilt, Rh	1
11	70709	(008000–)	Bearing, Flng, 2hole, 0.50b	2
12	1036892	(008000–)	Screw, Hex, M6 X 1.00 X 25, 9.8, Sems	4
13	1223504	(008000–)	Pin, Locking, Steering, Tilt	1
14	47585	(008000–)	Bearing, Flng, 2hole, 0.50b [Nyl]	2
15	32483	(008000–)	Washer, Flat, 0.25, Sae	4
16	08708	(008000–)	Nut, Hex, Lock, M6 X 1.00, Nl	4
17	70717	(008000–)	Ring, Retaining, Ext, 0.50d, Hd	1
18	22290	(008000–)	Spring, Cmpr, 0.72od .06wir 02.3l	1
19	32486	(008000–)	Washer, Flat, 0.53b 1.06d .10, Stl, Pl	1
20	04706	(008000–)	Knob, Tee, 0.38–16, 2.5 X 1.0 1.1l,Plstc	1
21	9015636	(008000–)	Gearbox Kit, Steering, Afmkt[M20/30/T20] (See Breakdowns)	1
22	1056412	(008000–)	Wheel, Steering, 14.4d	1
23	04846	(008000–)	Washer, Thrust, 0.79b 1.42d 0.06[Garlok]	2
24	9015634	(008000–)	Panel Kit, Pod, Afmkt [Std, M20/M30]	1
25	9015633	(008000–)	Panel Kit, Pod, Afmkt [Pro, M20/M30/T20] (Pro–Panel Only)	1
26	10632–13	(008000–)	Grommet, Rbr, 1.50id, F/1.8h, .19 Matl	1
27	06965	(008000–)	Screw, Hex, M10 X 1.50 X 80, 8.8	4
28	13248	(008000–)	Washer, Flat, 0.40b 1.12d .12, Stl, Pl	4
29	1031665	(008000–)	Screw, Pan, M8 X 1.25 X 25, Blk	6
30	32491	(008000–)	Washer, Flat, 0.31, Std	6
31	1230341	(010230–)	Bracket Wldt, Hose	1
32	08716	(010230–)	Screw, Hex, M6 X 1.00 X 20, Ss	1
33	08708	(010230–)	Nut, Hex, Lock, M6 X 1.00, Nl	2
34	1213802	(014001–)	Inductor, Ferrite [Spit Case, 220@100hz]	1

Fig. 9 – Front Cover Group

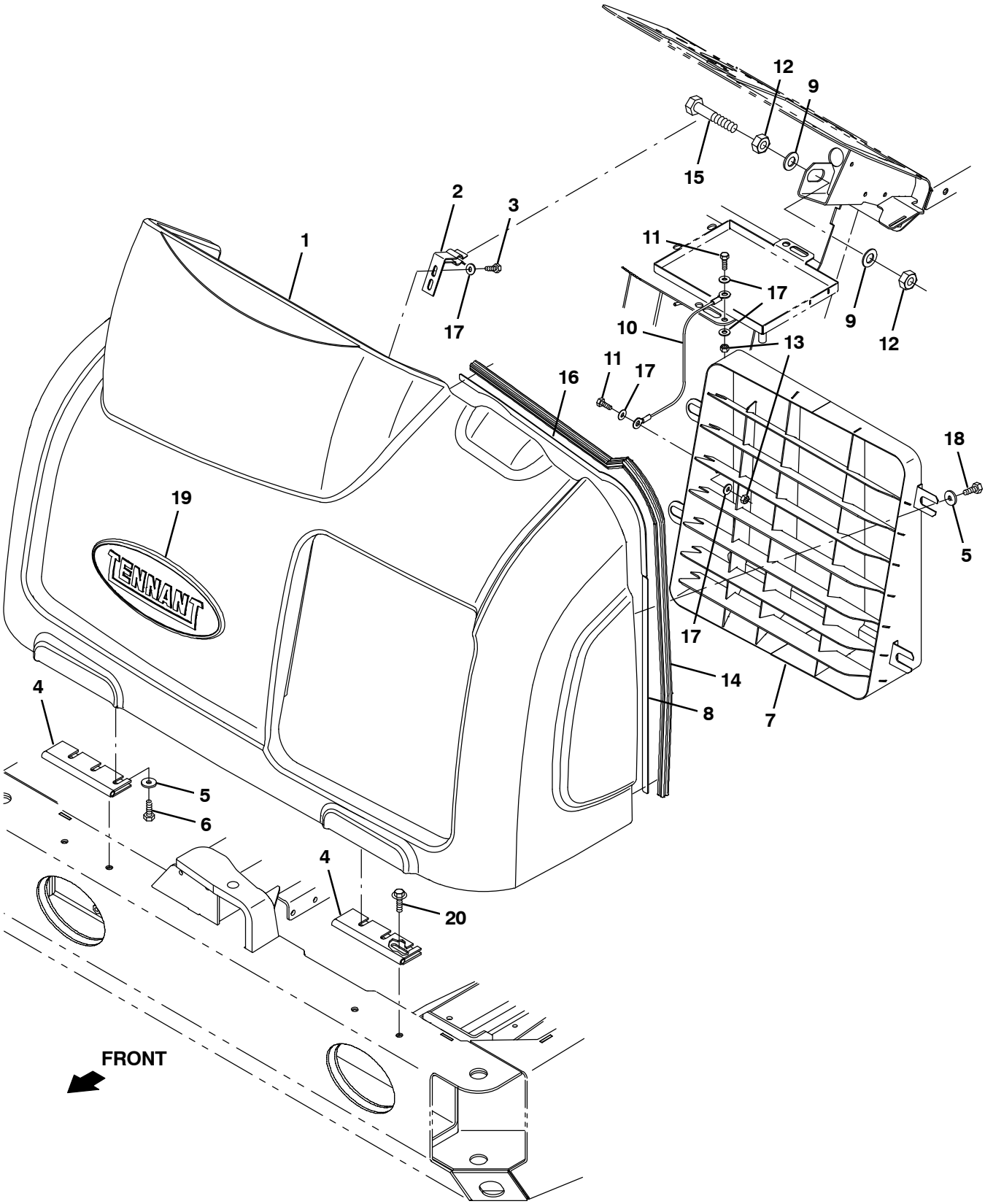

354413 – M20, T20

Fig. 9 – Front Cover Group

Ref.	Part No.	Serial Number	Description	Qty.
1	1022069	(008000–)	Shroud, Front, Trimmed	1
2	1008916	(008000–)	Bracket Wldt, Latch	1
3	06942	(008000–)	Screw, Hex, M6 X 1.0 X 16, 8.8	2
4	71941	(008000–)	Hinge, .38pin .11 3.5w 06.0l 6/0.38sl	2
5	1017218	(008000–)	Washer, Flat, 0.32b 1.00d .12, Ss	10
6	16931	(008000–)	Screw, Hex, M8 X 1.25 X 20, 8.8	6
7	1035068	(008000–)	Grill Wldt, Front	1
8	1037971	(008000–)	Strip Mtg, Seal	1
9	15331	(008000–)	Washer, Flat, 0.62 Sae	2
10	391368	(008000–)	Cable, Glv .09d 016.5l .38eye /.38eye	1
11	06943	(008000–)	Screw, Hex, M6 X 1.00 X 20, 8.8	2
12	07782	(008000–)	Nut, Hex, Std, M16 X 2.0	2
13	08708	(008000–)	Nut, Hex, Lock, M6 X 1.0, Nl	2
14	1049919	(008000–)	Seal, Sponge, 0.88 1.00W 43.0L	1
15	06988	(008000–)	Screw, Hex, M16 X 2.0 X 90, 8.8	1
16	1037970	(008000–)	Strip Mtg, Seal	1
17	32490	(008000–)	Washer, Flat, 0.25, Std	6
18	16735	(008000–)	Screw, Hex, M8 X 1.25 X 16, 8.8	4
19	1214251	(008000–)	Nameplate, Tennant, Domed, 10 Inch	1
20	1037346	(008000–)	Screw, Hex, M8 X 1.25 X 25, 9.8, Sems	4

Fig. 10 – Engine Cover Group

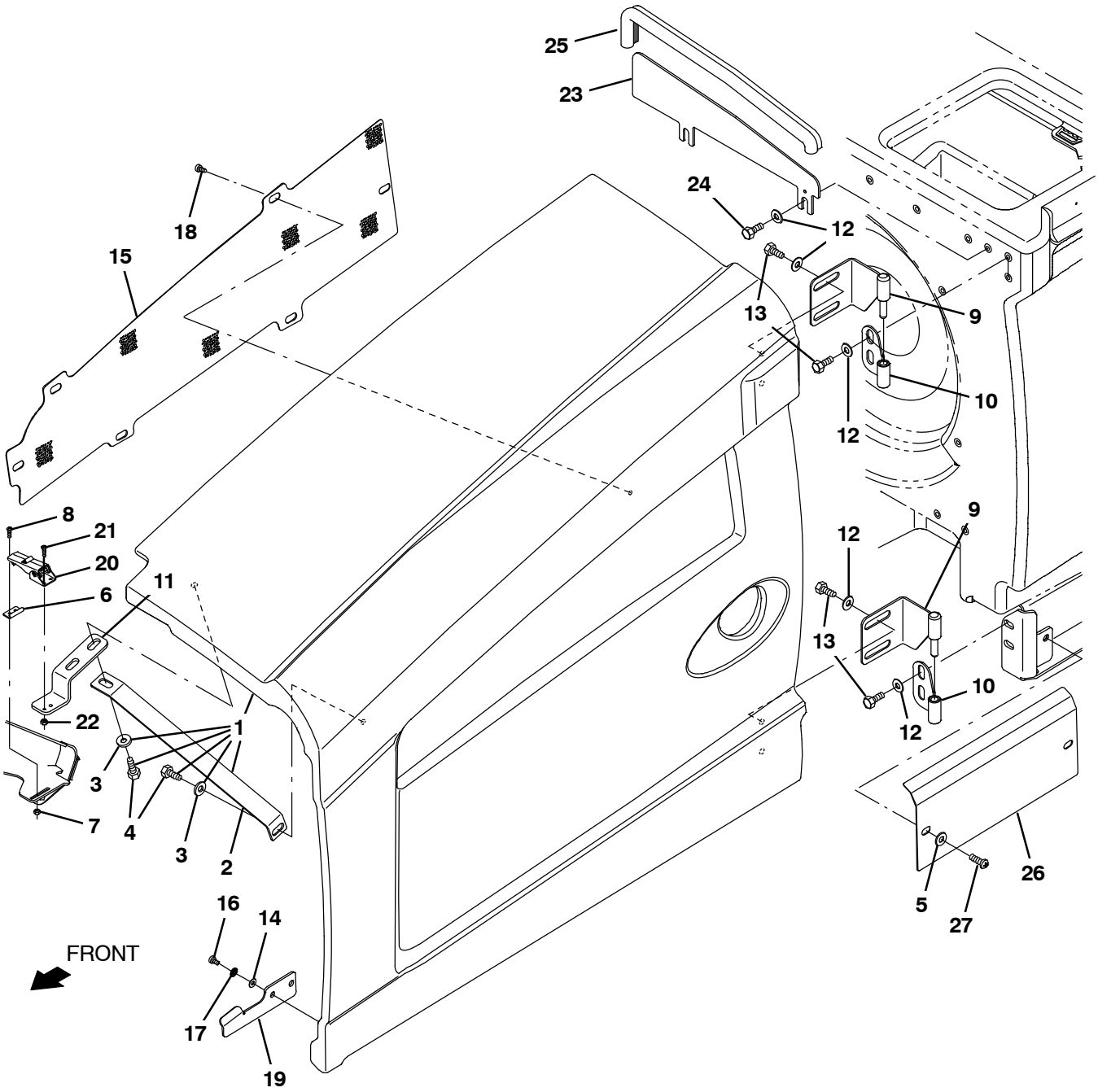

354414 – M20, G/LP

Fig. 10 – Engine Cover Group

	Ref.	Part No.	Serial Number	Description	Qty.
▽	1	1071439	(008000–)	Shroud Assy, Eng	1
▲	2	1026628	(008000–)	Angle, Brace, Shrd	1
▲	3	1017218	(008000–)	Washer, Flat, 0.32b 1.00d .12, Ss	2
▲	4	16931	(008000–)	Screw, Hex, M8 X 1.25 X 20, 8.8	2
	5	39349	(008000–)	Washer, Flat, 0.31 Sae	2
	6	384419	(008000–)	Bracket, Latch, Keeper [Southco]	1
	7	33932	(008000–)	Nut, Hex, Lock, M4 X 0.7, Nl, Ss	2
	8	24265	(008000–)	Screw, Pan, M4 X 0.7 X 16, Ss	2
	9	1024500	(008000–)	Hinge Wldt, Shrd, Lh	2
	10	1025196	(008000–)	Hinge Wldt, Shrd, Lh	2
	11	1020186	(008000–)	Bracket, Latch, Cover	1
	12	1017218	(008000–)	Washer, Flat, 0.32b 1.00d .12, Ss	11
	13	16931	(008000–)	Screw, Hex, M8 X 1.25 X 20, 8.8	7
	14	41139	(008000–)	Washer, Lock, Int–Ext, 10	2
	15	1026726	(008000–)	Grill, Eng	1
	16	09200	(008000–)	Screw, Pan, M5 X 0.8 X 12, Ss	2
	17	19066	(008000–)	Washer, Flat, #10	2
	18	222267	(008000–)	Screw, Pan, Phl, 06–20 X 0.50, Fmg/Ab	6
	19	1028412	(008000–)	Bracket, Guide, Shrd	1
	20	1222018	(008000–)	Latch, Door, Yellow	1
	21	06927	(008000–)	Screw, Pan, M4 X 0.7 X 16, 4.8	2
	22	02850	(008000–)	Nut, Hex, Lock, M4 X 0.7, Nl	2
	23	1025806	(008000–)	Plate, Seal, Sound	1
	24	09740	(008000–)	Screw, Hex, M8 X 1.25 X 20, Ss	2
	25	1030588	(008000–)	Seal, Afmkt, Bulb, 90, 0.75d F/11ga 02ft	2
	26	1022005	(008000–)	Cover, Lower	1
	27	1031665	(008000–)	Screw, Pan, M8 X 1.25 X 25, Blk	2

Fig. 11 – Mitsubishi Engine and Mount Group, Gas

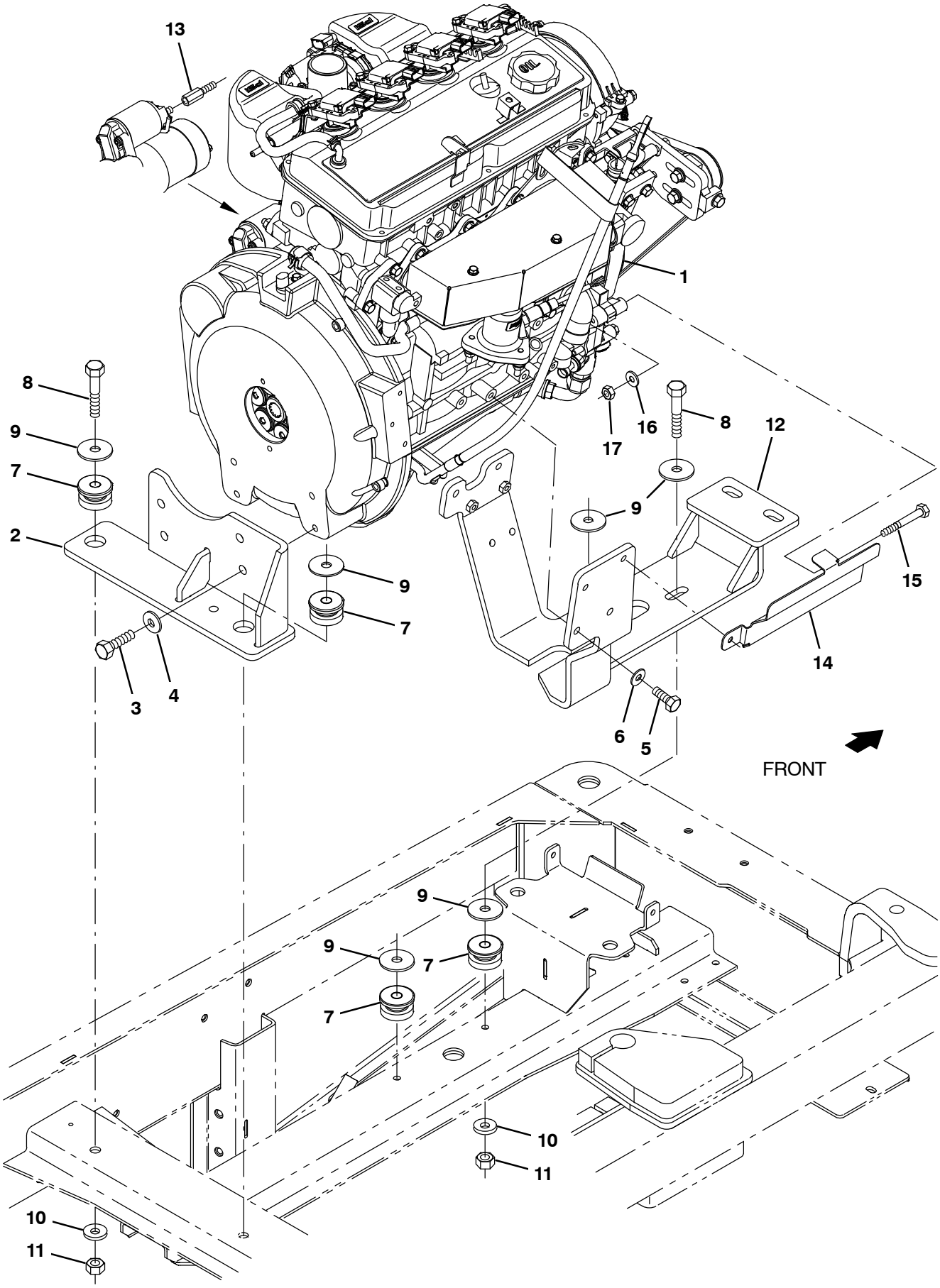

356291

Fig. 11 – Mitsubishi Engine and Mount Group, Gas

Ref.	Part No.	Serial Number	Description	Qty.
1	9014202	(008000–)	Engine, Block, Long [Mits 12mm] (See Engine Breakdown)	1
	393982	(008000–)	Element, Fltr, Oil, Spin–On (Mits)	1
2	1070756	(008000–)	Bracket Wldt, Mtg, Eng, Rear [Mit 2013]	1
3	41346	(008000–)	Screw, Hex, M12 X 1.75 X 30, 8.8	4
4	32486	(008000–)	Washer, Flat, 0.50 Sae	4
5	07299	(008000–)	Screw, Hex, M10 X 1.25 X 25, 8.8	6
6	32492	(008000–)	Washer, Flat, 0.38 Std	6
7	51176	(008000–)	Isolator, Vib, .50d	4
8	06972	(008000–)	Screw, Hex, M12 X 1.75 X 60, 8.8	4
9	04414	(008000–)	Washer, Flat, 0.53b 1.88d .12, Stl, Pl	4
10	32493	(008000–)	Washer, Flat, 0.50 Std	3
11	08711	(008000–)	Nut, Hex, Lock, M12 X 1.75,Nl	3
12	1070751	(008000–)	Bracket Wldt, Mtg, Engine [Mit 2013]	1
13	1072669	(008000–)	Stand–Off, Hex, M8 X M8, Metal	1
14	1258789	(008000–)	Plate, Guard, Hose, Hyd, Steering	1
15	39281	(008000–)	Screw, Hex, M8 X 1.25 X 90, 8.8	1
16	32491	(008000–)	Washer, Flat, 0.31, Std	1
17	08709	(008000–)	Nut, Hex, Lock, M8 X 1.25, Nl	1

Fig. 12 – Mitsubishi Engine and Mount Group, LPG

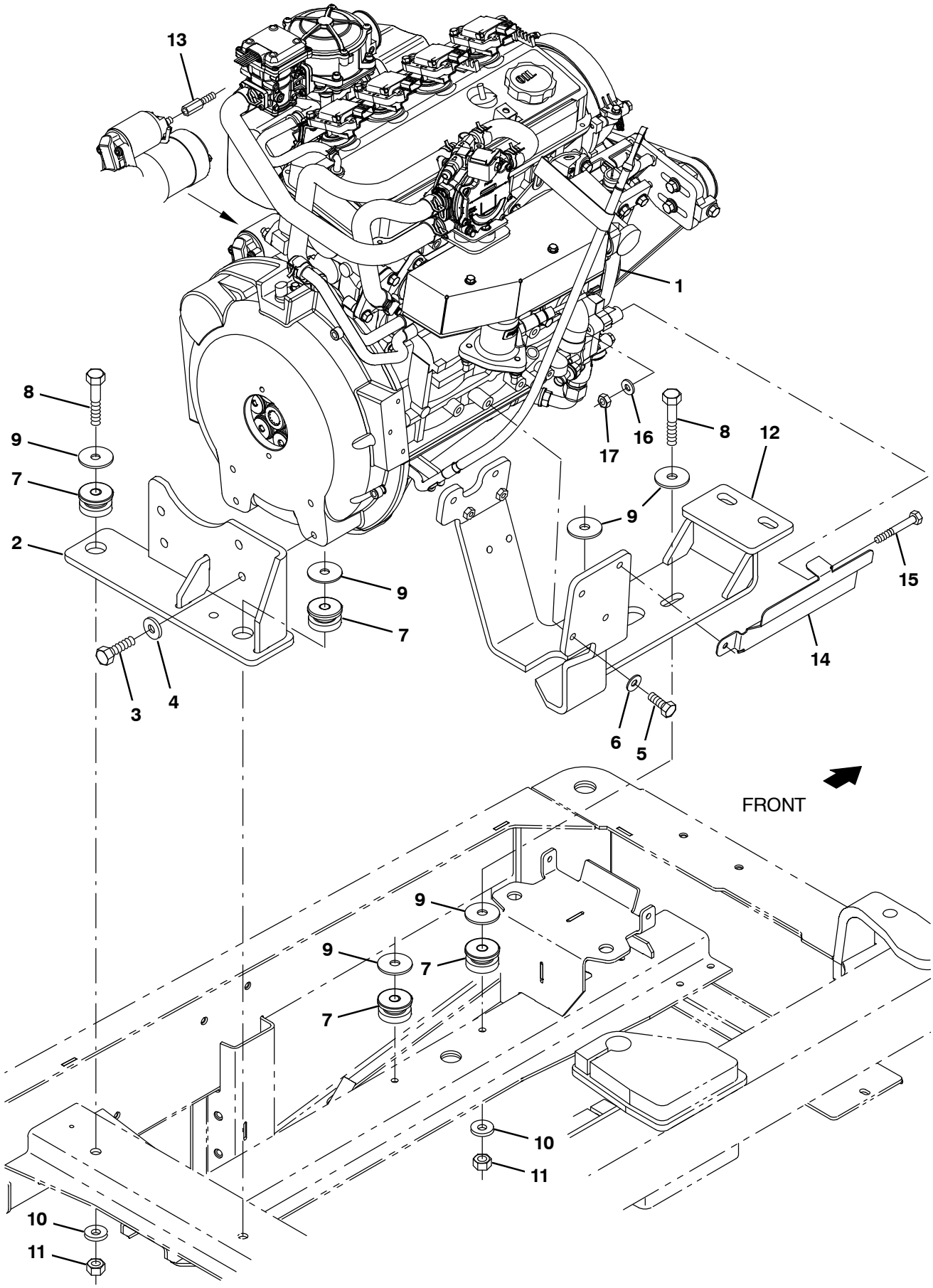

356292

Fig. 12 – Mitsubishi Engine and Mount Group, LPG

Ref.	Part No.	Serial Number	Description	Qty.
1	9014202	(008000–)	Engine, Block, Long [Mits 12mm] (See Engine Breakdown)	1
	393982	(008000–)	Element, Fltr, Oil, Spin–On (Mits)	1
2	1070756	(008000–)	Bracket Wldt, Mtg, Eng, Rear [Mit 2013]	1
3	41346	(008000–)	Screw, Hex, M12 X 1.75 X 30, 8.8	4
4	32486	(008000–)	Washer, Flat, 0.50 Sae	4
5	07299	(008000–)	Screw, Hex, M10 X 1.25 X 25, 8.8	6
6	32492	(008000–)	Washer, Flat, 0.38 Std	6
7	51176	(008000–)	Isolator, Vib, .50d	4
8	06972	(008000–)	Screw, Hex, M12 X 1.75 X 60, 8.8	4
9	04414	(008000–)	Washer, Flat, 0.53b 1.88d .12, Stl, Pl	4
10	32493	(008000–)	Washer, Flat, 0.50 Std	3
11	08711	(008000–)	Nut, Hex, Lock, M12 X 1.75,Nl	3
12	1070751	(008000–)	Bracket Wldt, Mtg, Engine [Mit 2013]	1
13	1072669	(008000–)	Stand–Off, Hex, M8 X M8, Metal	1
14	1258789	(008000–)	Plate, Guard, Hose, Hyd, Steering	1
15	39281	(008000–)	Screw, Hex, M8 X 1.25 X 90, 8.8	1
16	32491	(008000–)	Washer, Flat, 0.31, Std	1
17	08709	(008000–)	Nut, Hex, Lock, M8 X 1.25, Nl	1

Fig. 13 – Mitsubishi Engine EFI Group, Gasoline

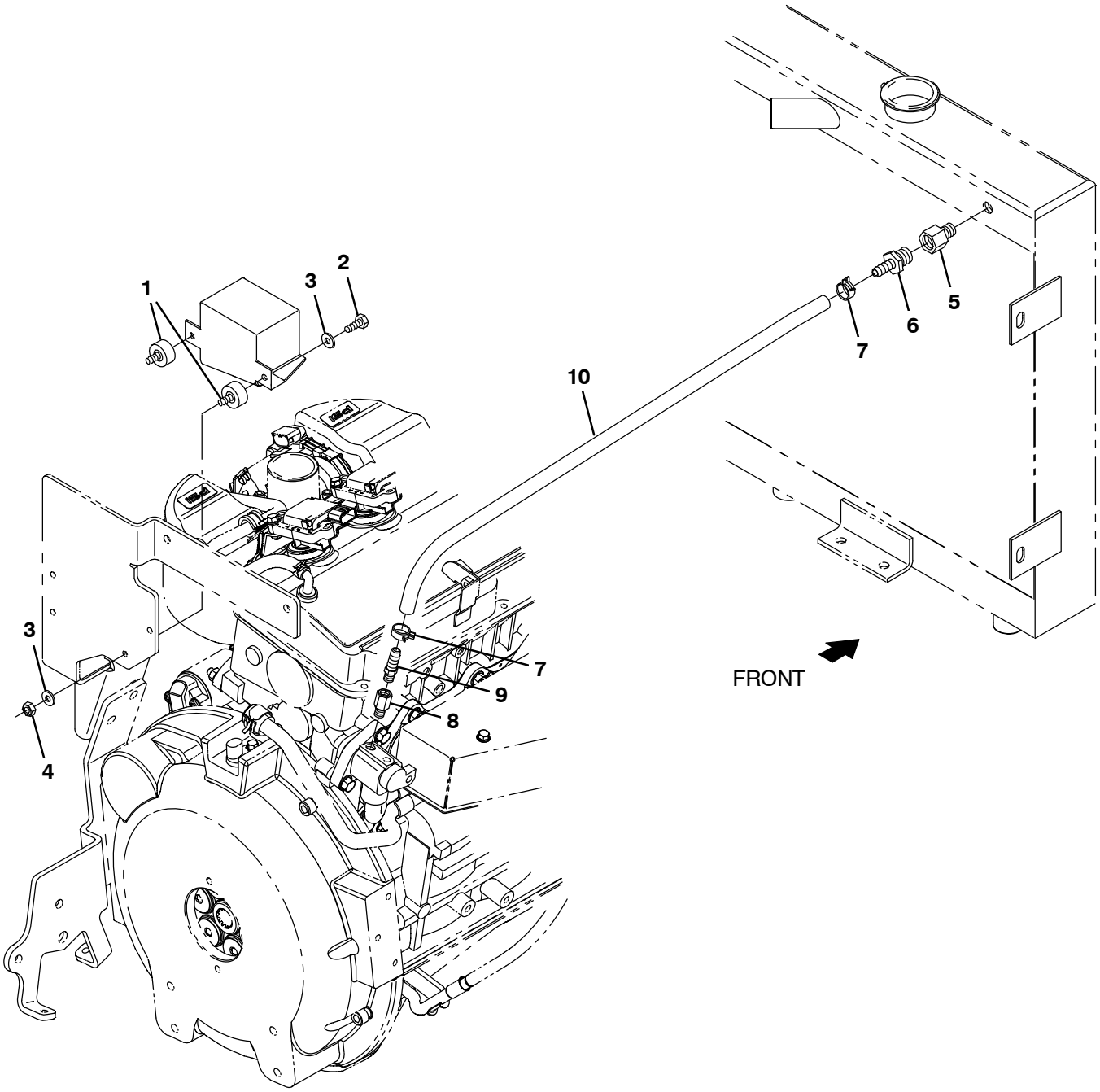

356293

Fig. 13 – Mitsubishi Engine EFI Group, Gasoline

Ref.	Part No.	Serial Number	Description	Qty.
1	372470	(008000–)	Isolator, Box, Relay	2
2	19315	(008000–)	Screw, Hex, .25–20 X 0.50, G5	2
3	32490	(008000–)	Washer, Flat, 0.25, Std	4
4	19312	(008000–)	Nut, Hex, Std, .25–20	2
5	1071440	(008000–)	Fitting, Brs, Str, Pf06/Pm04	1
6	36159	(008000–)	Fitting, Brs, Str, Bm06/Pm06	1
7	1072559	(008000–)	Clamp, Hose, Spring Stl, 0.58d X 0.31w	2
8	1071502	(008000–)	Fitting, Brs, Str, Pf02/Pm02 [Bspt]	1
9	1055552	(008000–)	Fitting, Brs, Str, Bm06/Pm02	1
10	1072408	(008000–)	Hose, Afmkt, Rbr, Heater, 0.38id, 03ft	1

Fig. 14 – Mitsubishi Engine EFI Group, LPG

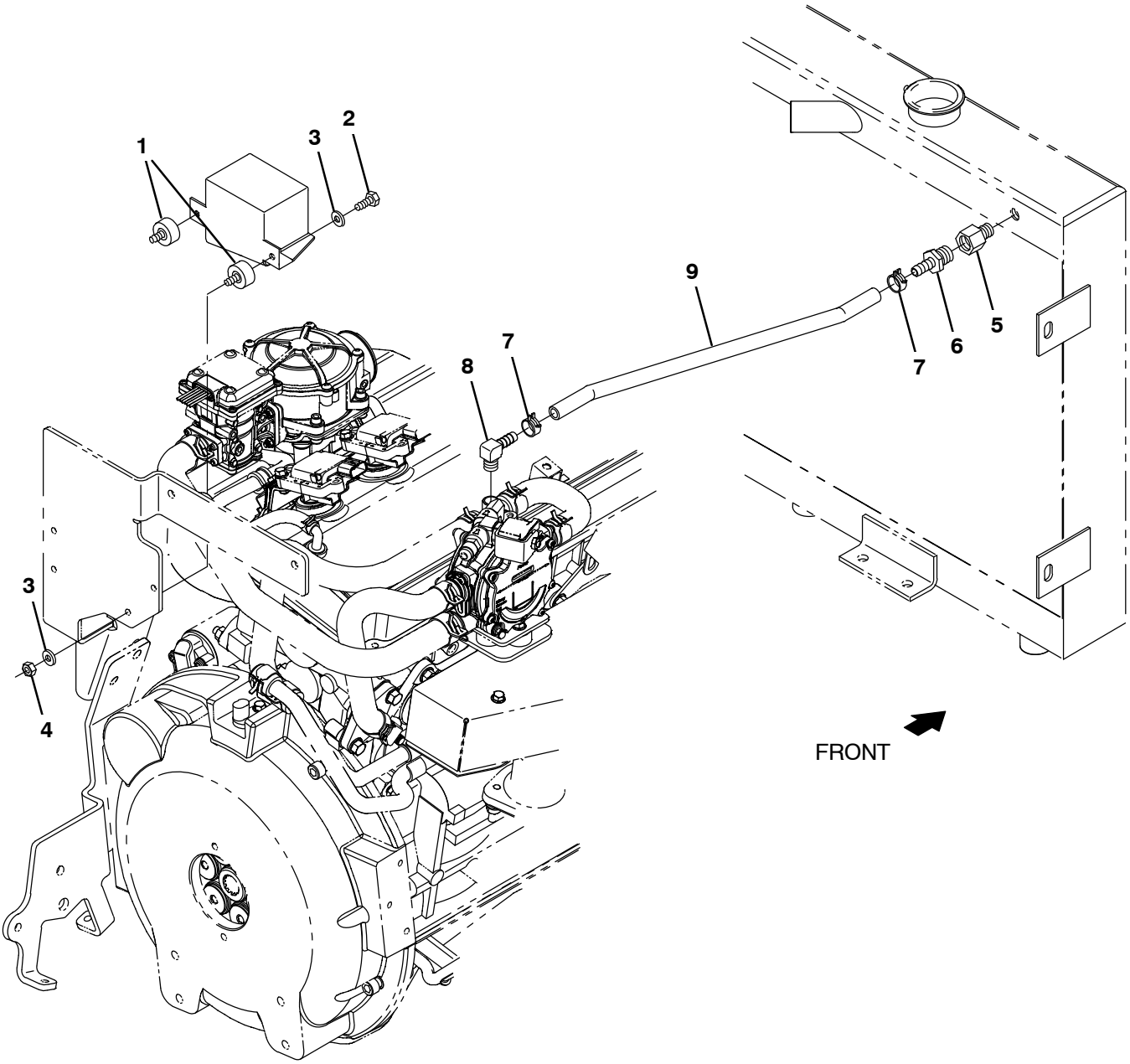

356294

Fig. 14 – Mitsubishi Engine EFI Group, LPG

Ref.	Part No.	Serial Number	Description	Qty.
1	372470	(008000–)	Isolator, Box, Relay	2
2	19315	(008000–)	Screw, Hex, .25–20 X 0.50, G5	2
3	32490	(008000–)	Washer, Flat, 0.25, Std	4
4	19312	(008000–)	Nut, Hex, Std, .25–20	2
5	1071440	(008000–)	Fitting, Brs, Str, Pf06/Pm04	1
6	36159	(008000–)	Fitting, Brs, Str, Bm06/Pm06	1
7	1072559	(008000–)	Clamp, Hose, Spring Stl, 0.58d X 0.31w	2
8	1015815	(008000–)	Fitting, Brs, E90, Bm06/Pm04	1
9	1072408	(008000–)	Hose, Afmkt, Rbr, Heater, 0.38id, 03ft	1

Fig. 15 – Mitsubishi Engine Air Cleaner Group, Gasoline

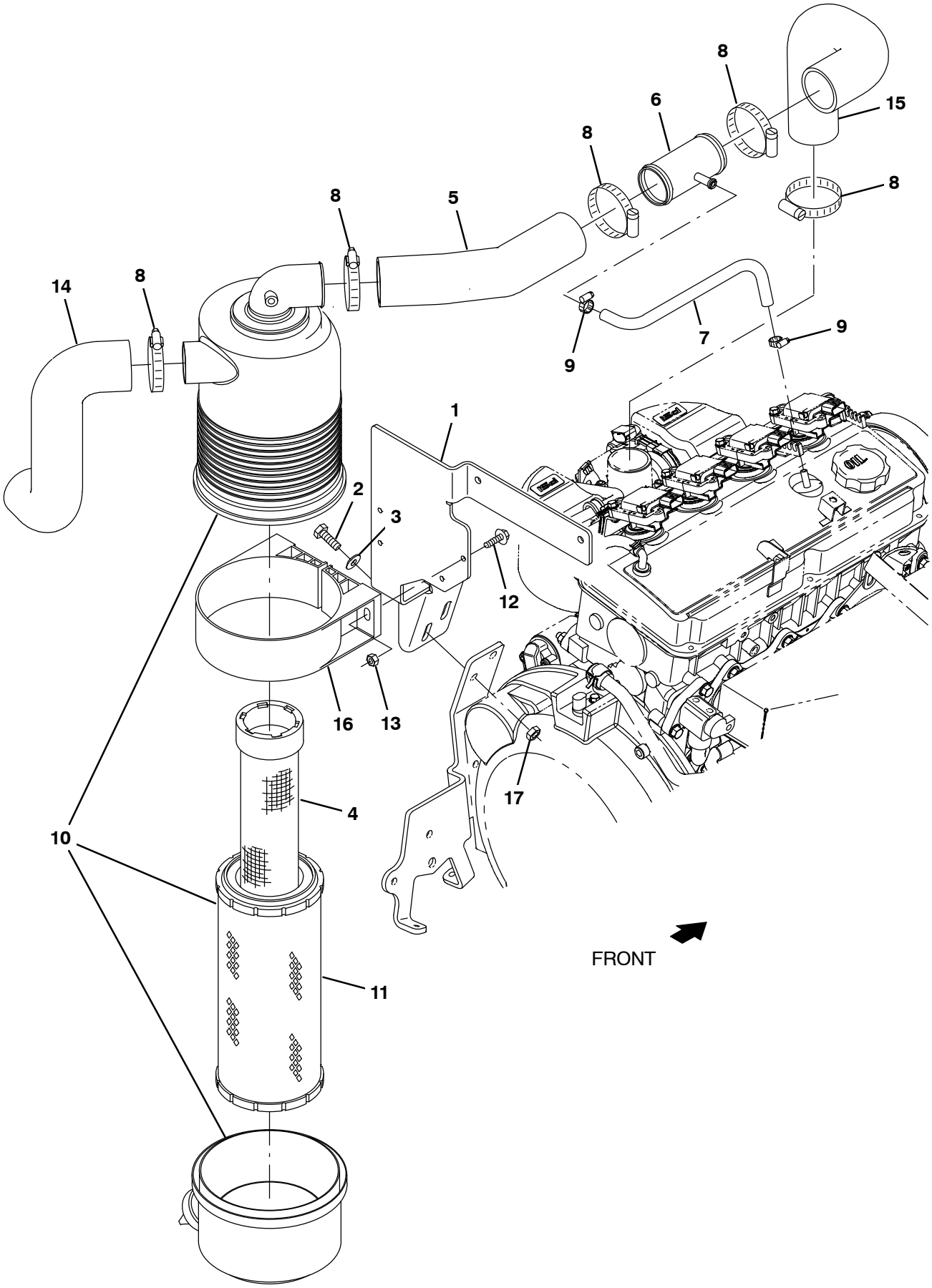

356295 – M20, T20, NA

Fig. 15 – Mitsubishi Engine Air Cleaner Group, Gasoline

	Ref.	Part No.	Serial Number	Description	Qty.
	1	1070822	(008000–)	Bracket, Mtg, Fltr, Air [Mit 2013]	1
	2	39277	(008000–)	Screw, Hex, M8 X 1.25 X 25, 8.8	2
	3	32491	(008000–)	Washer, Flat, 0.31, Std	2
	4	398279	(008000–)	Element, Fltr, Air, Safety (OPTION)	1
	5	1070788	(008000–)	Hose, Intake, Mold [Epdm Mit 2013]	1
	6	1070833	(008000–)	Tube Wldt, Tee [Mit 2013]	1
	7	381391	(008000–)	Hose, Drain,Overflow,Radiator[1pick=1ft]	1
	8	14432	(008000–)	Clamp, Hose, Wormdrive, 1.81–2.75d, .50w	5
	9	54333	(008000–)	Clamp, Hose, Wormdrive, 0.31–0.88d, .31w	2
▽	10	369745	(008000–)	Filter Assy, Air	1
▲	11	369746	(008000–)	Element, Fltr, Air [Dn]	1
	12	1036892	(008000–)	Screw, Hex, M6 X 1.00 X 25, 9.8 Sems	2
	13	08708	(008000–)	Nut, Hex, Lock, M6 X 1.00, Nl	2
	14	1020949	(008000–)	Hose, Intake, Mold, 2.00id [Epdm]	1
	15	1071404	(008000–)	Hose, Intake, Mold, Gas [Epdm Mit 2013]	1
	16	369747	(008000–)	Clamp, Mtg, Fltr, Air	1
	17	08709	(008000–)	Nut, Hex, Lock, M8 X 1.25, Nl	2

Fig. 16 – Mitsubishi Engine Air Cleaner Group, LPG

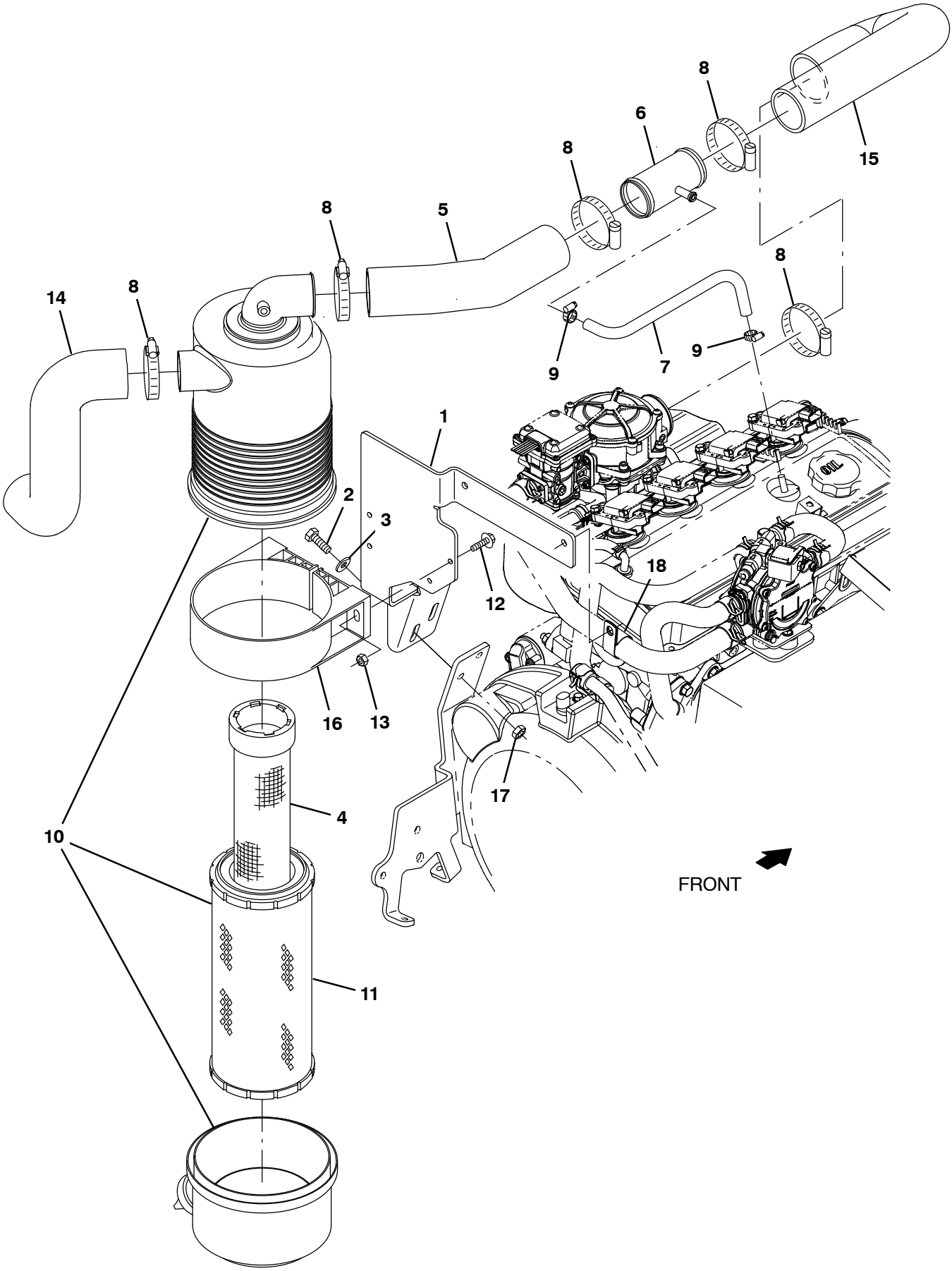

356296 – M20, T20, NA

Fig. 16 – Mitsubishi Engine Air Cleaner Group, LPG

	Ref.	Part No.	Serial Number	Description	Qty.
	1	1070822	(008000–)	Bracket, Mtg, Fltr, Air [Mit 2013]	1
	2	39277	(008000–)	Screw, Hex, M8 X 1.25 X 25, 8.8	2
	3	32491	(008000–)	Washer, Flat, 0.31, Std	2
	4	398279	(008000–)	Element, Fltr, Air, Safety (OPTION)	1
	5	1070788	(008000–)	Hose, Intake, Mold [Epdm Mit 2013]	1
	6	1070833	(008000–)	Tube Wldt, Tee [Mit 2013]	1
	7	381391	(008000–)	Hose, Drain,Overflow,Radiator[1pick=1ft]	1
	8	14432	(008000–)	Clamp, Hose, Wormdrive, 1.81–2.75d, .50w	5
	9	54333	(008000–)	Clamp, Hose, Wormdrive, 0.31–0.88d, .31w	2
▽	10	369745	(008000–)	Filter Assy, Air	1
▲	11	369746	(008000–)	Element, Fltr, Air [Dn]	1
	12	1036892	(008000–)	Screw, Hex, M6 X 1.00 X 25, 9.8 Sems	2
	13	08708	(008000–)	Nut, Hex, Lock, M6 X 1.00, Nl	2
	14	1020949	(008000–)	Hose, Intake, Mold, 2.00id [Epdm]	1
	15	1070787	(008000–)	Hose, Intake, Mold, Lpg [Epdm Mit2013]	1
	16	369747	(008000–)	Clamp, Mtg, Fltr, Air	1
	17	08709	(008000–)	Nut, Hex, Lock, M8 X 1.25, Nl	2
	18	69234	(008000–)	Clamp, Cable, Stl, 1.00d X 0.75w, 1hole	1

Fig. 17 – Mitsubishi Engine Alternator and Fan Group

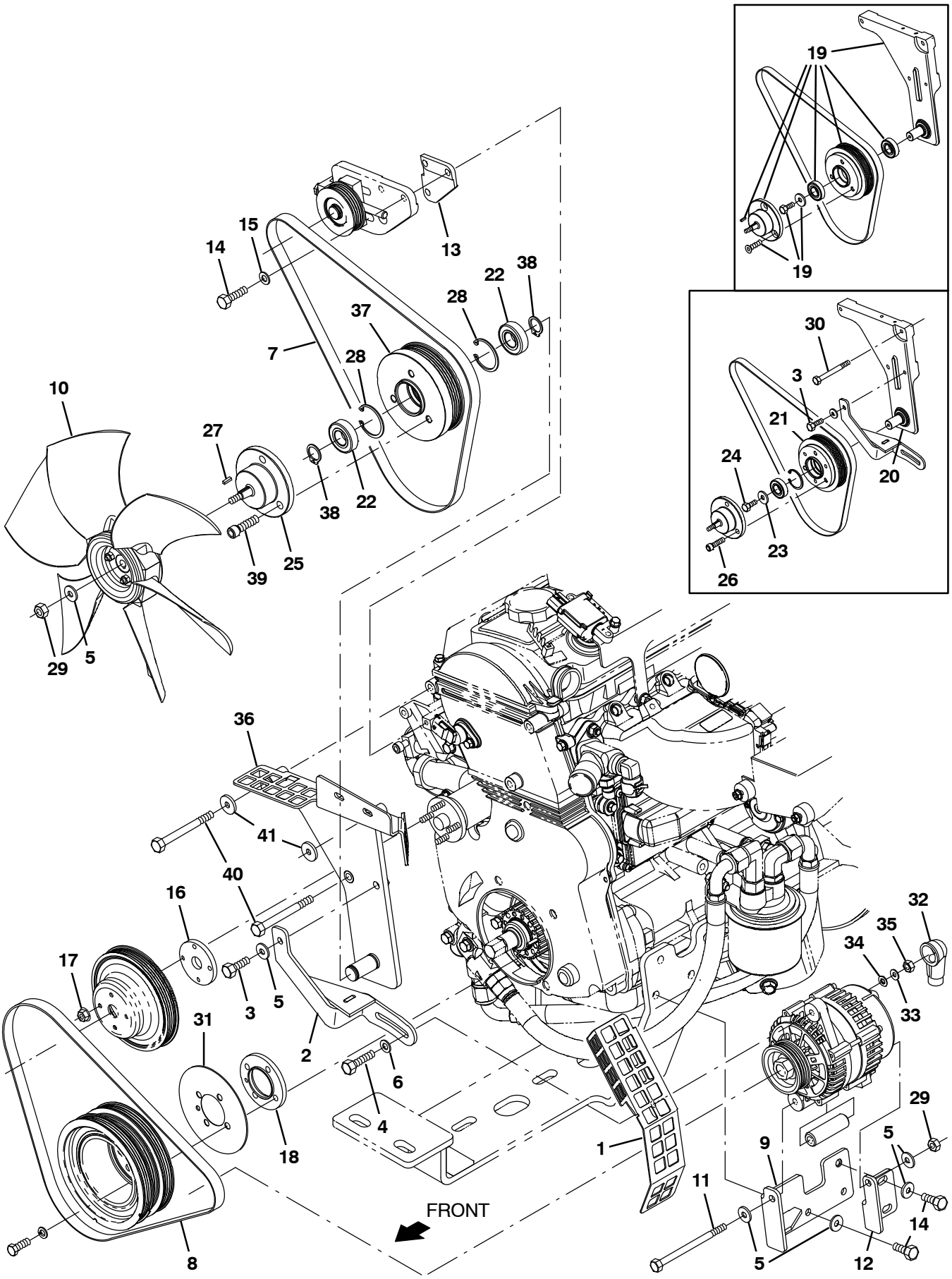

356297

Fig. 17 – Mitsubishi Engine Alternator and Fan Group

Ref.	Part No.	Serial Number	Description	Qty.
1	1071727	(008000–)	Guard, Fan, Side	1
2	1070890	(008000–)	Arm Wldt, Alternator [Mit 2013]	1
3	16931	(008000–012313)	Screw, Hex, M8 X 1.25 X 20, 8.8	1
4	04375	(008000–)	Screw, Hex, M8 X 1.25 X 40, 8.8, Fl	1
5	32491	(008000–)	Washer, Flat, 0.31, Std	7
6	41186	(008000–)	Washer, Flat, Belleville, .31	1
7	1071144	(008000–)	Belt, Ribbed, Fan, 42.13l	1
8	1071145	(008000–)	Belt, Ribbed, Alternator, 41.5l	1
9	1070764	(008000–)	Bracket Wldt, Alternator [Mit13]	1
10	1031566	(008000–)	Fan, Cooling, 14.1d, 6 Blade, 0.5b Taper	1
11	49883	(008000–)	Screw, Hex, M8 X 1.25 X 120, 8.8, Fl	1
12	1070619	(008000–)	Bracket, Mtg, Alternator [Mit 2013]	1
13	1071107	(008000–)	Block, Spacer	1
14	76570	(008000–)	Screw, Hex, M8 X 1.25 X 30, 8.8	5
15	39349	(008000–)	Washer, Flat, 0.31, Sae	2
16	1071108	(008000–)	Spacer, Pump, Water	1
17	07790	(008000–)	Nut, Hex, Flng, M6 X 1.00	4
18	1071110	(008000–)	Spacer, Crankfshaft	1
19	9021787	(008000–010387)	Repair Kit, Sheave	1
20	1073529	(010388–012313)	Plate Wldt, Shaft, Fan [Shaft Extended]	1
21	1070426	(010388–012313)	Sheave, Mach [Mit 2615rpm Fan]	1
22	1055377	(010388–)	Bearing, Ball, 20mm B 42mm D 12mm W	2
23	1017218	(010388–012313)	Washer, Flat, 0.32b 1.00d .12, Ss	1
24	16735	(010388–012313)	Screw, Hex, M8 X 1.25 X 16, 8.8	1
25	1070431	(010388–)	Spacer, Fan, Taper [Mit 2013]	1
26	10831	(010388–012313)	Screw, Soc, .38–16 X 1.25, Al	3
27	00960	(010388–)	Key, Sq, 0.12 X 0.12, 0.50l	1
28	1074849	(010388–)	Ring, Retaining, Int, 42mm	2
29	08709	(008000–)	Nut, Hex, Lock, M8 X 1.25, Nl	2
30	39281	(008000–)	Screw, Hex, M8 X 1.25 X 90, 8.8	3
31	1072421	(008000–)	Plate, Shield, Dust	1
32	1016314	(008000–)	Boot, Bulb, .50id 1.00id 2.50l, Red	1
33	19066	(008000–)	Washer, Flat, 0.25b 0.56d .05, Pl, 10	1
34	32982	(008000–)	Washer, Lock, Int, 0.25	1
35	08708	(008000–)	Nut, Hex, Lock, M6 X 1.00, Nl	1
36	1257706	(012314–)	Plate Wldt, Shaft, Fan	1
37	1257986	(012314–)	Sheave, Mach	1
38	1025121	(012314–)	Ring, Retaining, Shaft, Ext, 20mmd, Hd	2
39	41358	(012314–)	Screw, Soc, M10 X 1.50 X 35, 12.9	1
40	06959	(012314–)	Screw, Hex, M8 X 1.25 X 100, 8.8	3
41	1017218	(012314–)	Washer, Flat, 0.32b 1.00d .12, Ss	2
42	39277	(012314–)	Screw, Hex, M8 X 1.25 X 25, 8.8	1

Fig. 18 – Mitsubishi Engine Muffler Group

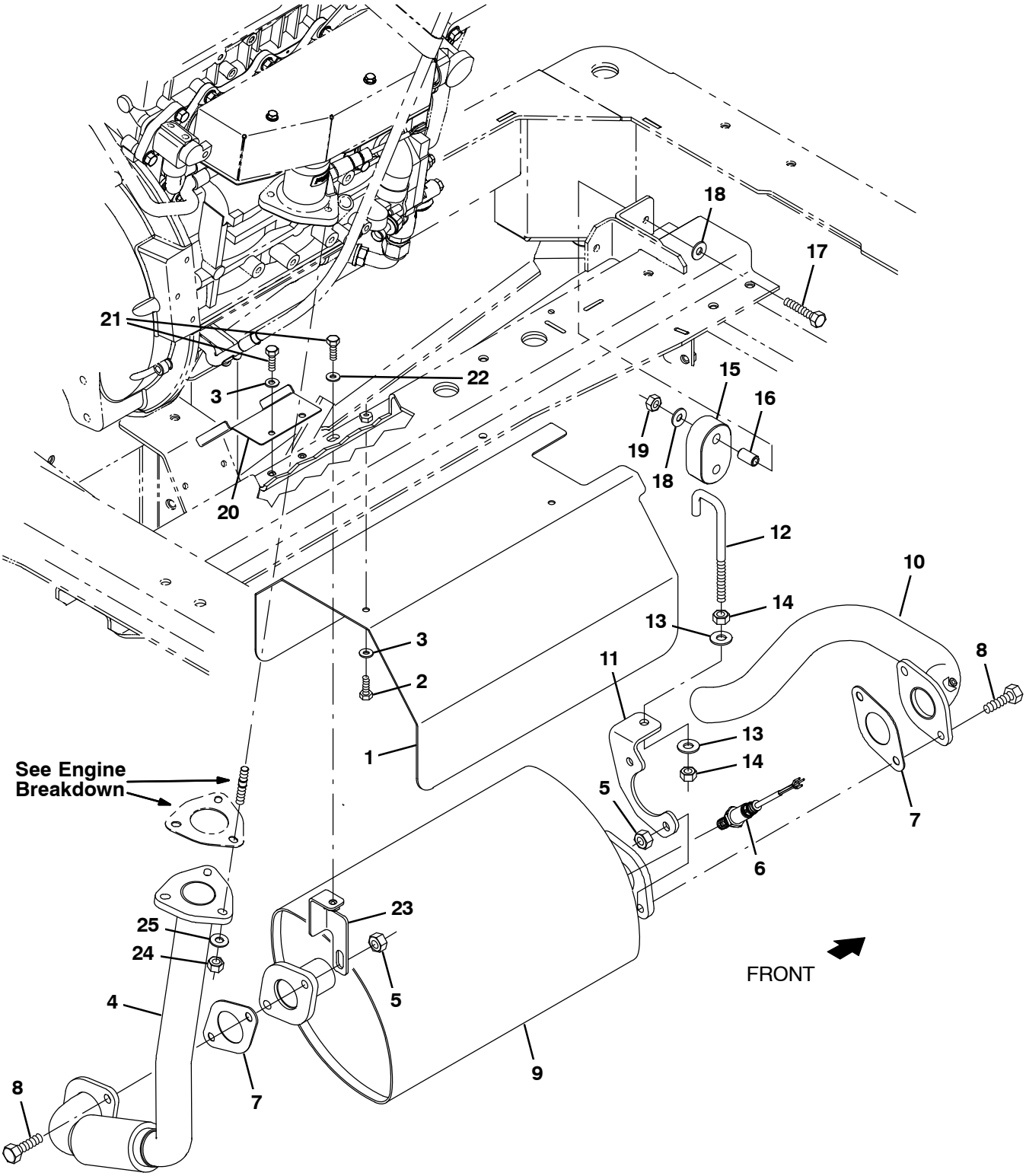

356298

Fig. 18 – Mitsubishi Engine Muffler Group

Ref.	Part No.	Serial Number	Description	Qty.
1	1028994	(008000–)	Channel, Shield, Muffler [M20/T20 2007]	1
2	08716	(008000–)	Screw, Hex, M6 X 1.0 X 20, Ss	2
3	32483	(008000–)	Washer, Flat, 0.25, Sae	4
4	9013159	(008000–)	Pipe Kit, Exhaust, Replmt [Mako Mitsu]	1
5	08166	(008000–)	Nut, Hex, M10 X 1.50 [Stover]	4
6	1028558	(008000–)	Sensor, Oxygen	1
7	1011216	(008000–)	Gasket, Exhaust, 2hole, 3.4bc	2
8	39284	(008000–)	Screw, Hex, M10 X 1.5 X 35, 8.8	4
9	1071376	(008000–)	Muffler, Catalytic [Mit 2.0l 2013]	1
10	1028753	(008000–)	Tube, Exhaust, Flng, 1.5d [M20/T20 2007]	1
11	1028929	(008000–)	Bracket, Mtg, Muffler [M20/T20 2007]	1
12	1013117	(008000–)	Rod, Hanger, Isolator	1
13	32492	(008000–)	Washer, Flat, 0.38, Std	2
14	25014	(008000–)	Nut, Hex, Std, .38–16	2
15	1013031	(008000–)	Isolator, Rbr	1
16	222496	(008000–)	Sleeve, P/M, 0.31b 0.50d 0.9l [430ss]	1
17	222505	(008000–)	Screw, Hex, M8 X 1.25 X 45, Ss	1
18	01685	(008000–)	Washer, Flat, 0.38b 0.88d .08, Ss	2
19	08713	(008000–)	Nut, Hex, Lock, M8 X 1.25, Nl, Ss	1
20	1071418	(008000–)	Shield, Tray, Drip [Mit 2013]	1
21	06943	(008000–)	Screw, Hex, M6 X 1.00 X 20, 8.8	3
22	32490	(008000–)	Washer, Flat, 0.25, Std	1
23	1071113	(008000–)	Bracket, Muffler	1
24	08165	(008000–)	Nut, Hex, Stover, M8	3
25	39349	(008000–)	Washer, Flat, 0.31, Sae	3

Fig. 19 – Mitsubishi Engine Radiator and Mount Group

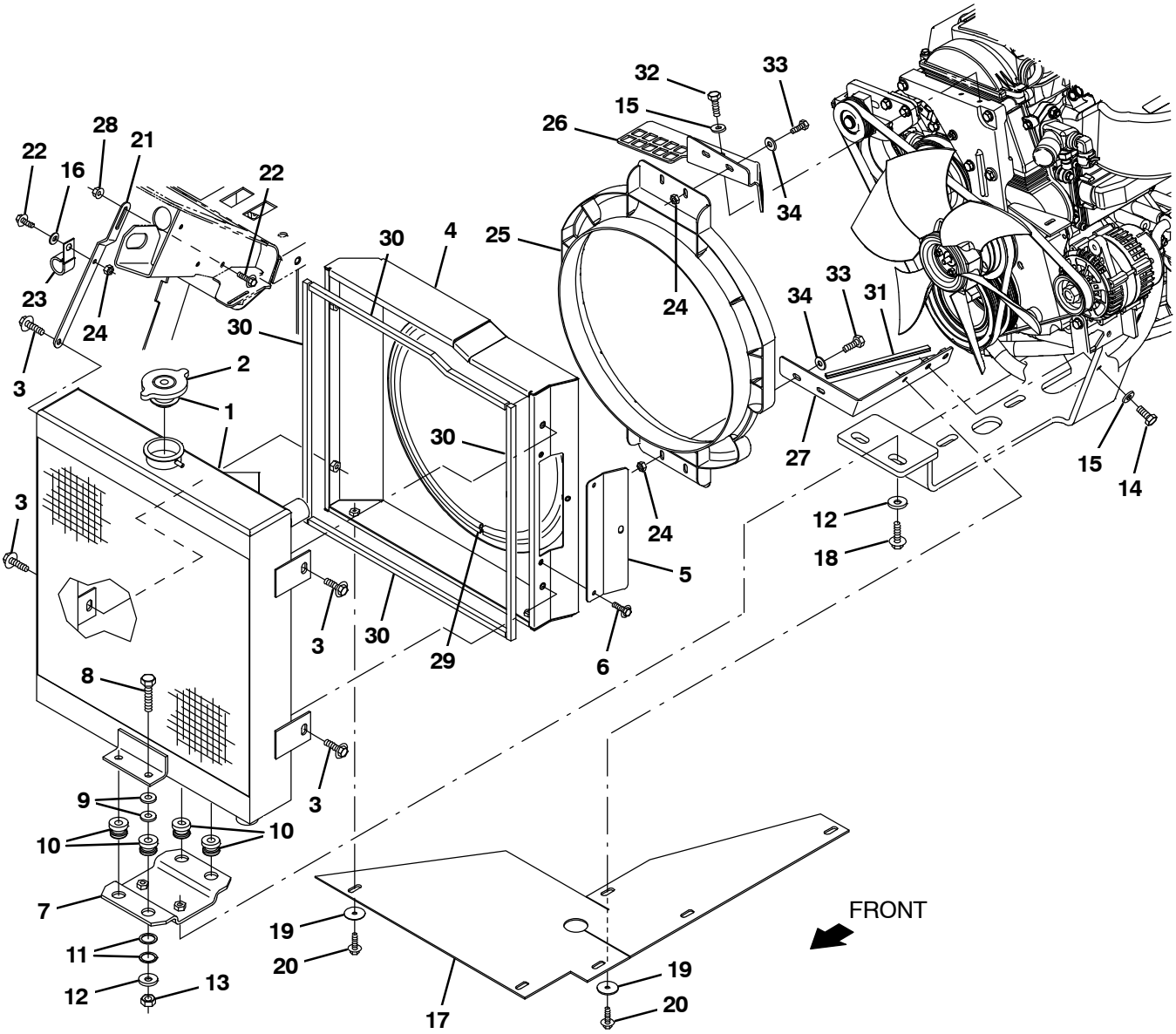

356299

Fig. 19 – Mitsubishi Engine Radiator and Mount Group

	Ref.	Part No.	Serial Number	Description	Qty.
▽	1	1249770	(008000–)	Radiator, W/Hyd Cooler [Afmkt]	1
▲	2	1045764	(008000–)	Cap, Radiator, 14Psi [Stant]	1
	3	1037346	(008000–)	Screw, Hex, M8 X 1.25 X 25, 9.8, Sems	4
	4	9010096	(008000–)	Shrd Wldt,Fan,G/Lp, Replmt [M20/M30/T20]	1
	4	9010097	(008000–)	Shrd Wldt,Fan,G/Lp, Replmt [TJ] (Japan Only)	1
	5	1070955	(008000–)	Plate, Door, Clean–Out [Mit2013]	1
	6	1036892	(008000–)	Screw, Hex, M6 X 1.00 X 25, 9.8 Sems	3
	7	1046962	(008000–)	Bracket, Mtg, Radiator	1
	8	06962	(008000–)	Screw, Hex, M10 X 1.50 X 45, 8.8	4
	9	32492	(008000–)	Washer, Flat, 0.38, Std	8
	10	54274	(008000–)	Isolator, Vib, Bshg, 1.1d 0.6l .4b 0.78h	4
	11	09832	(008000–)	Washer, Flat, 0.81b 1.06d .06, Stl	8
	12	1014563	(008000–)	Washer, Flat, 0.40b 1.12d .12, Ss	4
	13	41430	(008000–)	Nut, Hex, Lock, M10 X 1.5, Nl	4
	14	39277	(008000–)	Screw, Hex, M8 X 1.25 X 25, 8.8	2
	15	32491	(008000–)	Washer, Flat, 0.31, Std	7
	16	32490	(008000–)	Washer, Flat, 0.25, Std	2
	17	1071785	(008000–)	Skirt, Eng Fan, Gas / Lp	1
	18	1037355	(008000–)	Screw, Hex, M8 X 1.25 X 35, 9.8, Sems	2
	19	41178	(008000–)	Washer, Flat, 0.25, Fendr	7
	20	1036892	(008000–)	Screw, Hex, M6 X 1.00 X 25, 9.8 Sems	7
	21	1019968	(008000–)	Bracket, Mtg, Radiator	1
	22	1040467	(008000–)	Screw, Hex, M6 X 1.00 X 20, 9.8, Sems	2
	23	30407	(008000–)	Clip, Keeper, Open	1
	24	08708	(008000–)	Nut, Hex, Lock, M6 X 1.00, Nl	5
	25	1054428	(008000–)	Shroud, Fan	1
	26	1070434	(008000–)	Bracket, Shrd, Fan, Upper, Sppt, G/Lpg	1
	27	1070860	(008000–)	Bracket, Shrd, Fan, Lower, Sppt, G/Lpg	1
	28	07790	(008000–)	Nut, Hex, Flng, M6 X 1.00	1
	29	1048166	(008000–)	Seal, Afmkt, Bulb, Str, 0.58d 08ft	1
	30	1015205	(008000–)	Seal, Afmkt, Ure, Adh, 0.38, 0.38w 02ft	4
	31	57569	(008000–)	Molding, Trim, Pvc, .08–.11 06.8l	1
	32	16931	(008000–)	Screw, Hex, M8 X 1.25 X 20, 8.8	2
	33	06943	(008000–)	Screw, Hex, M6 X 1.00 X 20, 8.8	4
	34	32483	(008000–)	Washer, Flat, 0.25, Sae	4

Fig. 20 – Mitsubishi Engine Radiator Hose Group

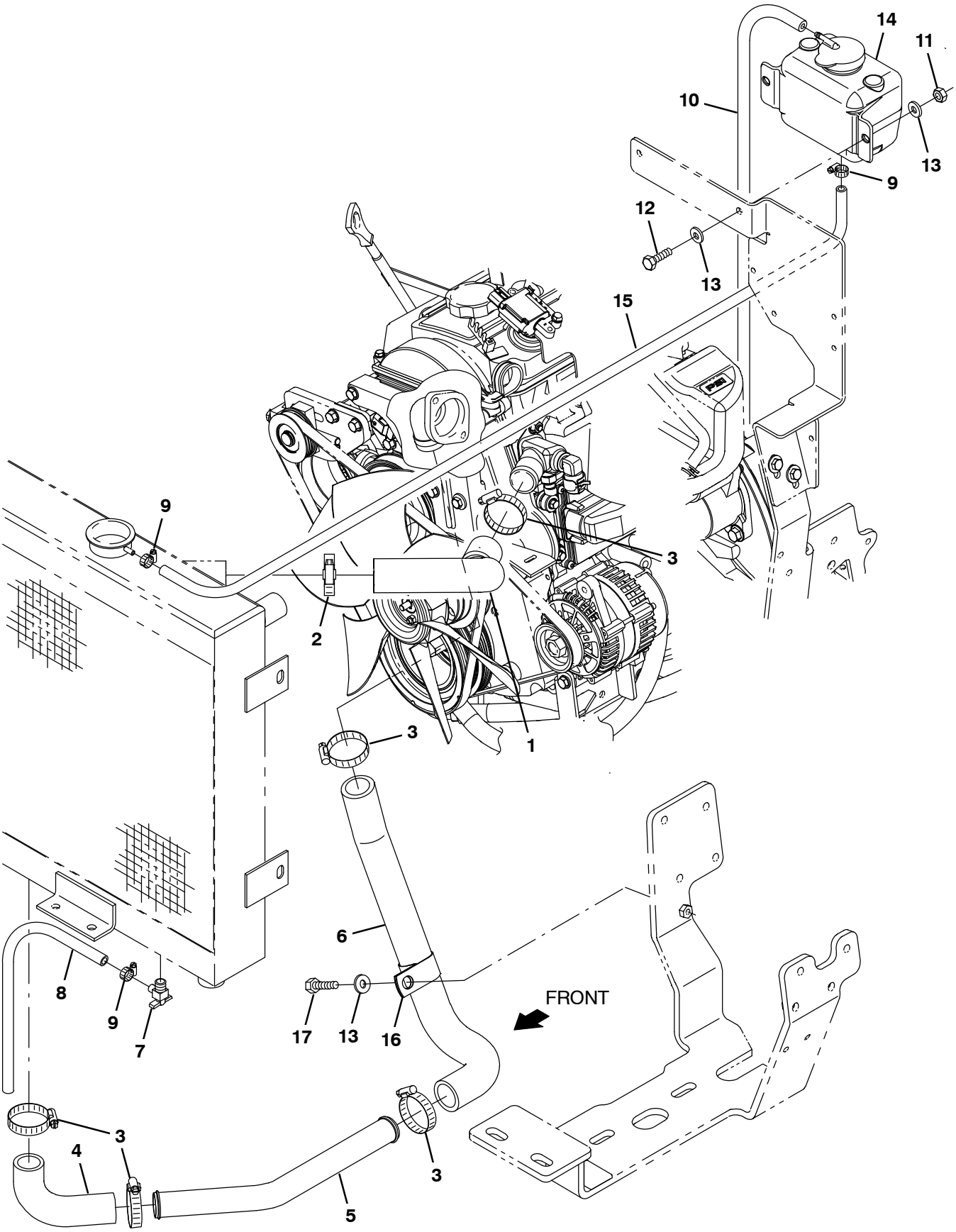

356300

Fig. 20 – Mitsubishi Engine Radiator Hose Group

Ref.	Part No.	Serial Number	Description	Qty.
1	1070732	(008000–)	Hose, Coolant, Upper, Mold [Mit 2013]	1
2	22297	(008000–)	Clamp, Hose, Wormdrive, 1.56–2.50d, .50w	1
3	79381	(008000–)	Clamp, Hose, Wormdrive, 1.25–2.00d, .50w	5
4	1007482	(008000–)	Hose, Rbr, E90, 1.25id 1.25id 04.2 03.1	1
5	1071099	(008000–)	Tube, Coolant, 1.3d, Lower [Mit 2013]	1
6	9010904	(008000–)	Hose Kit, Coolant, Replmt [Mitsubishi}	1
7	51305	(008000–)	Fitting, Draincock, E90, .25npt	1
8	73471	(008000–)	Hose, Pvc, Clr, 0.38id 0.56od 022.0l	1
9	43844	(008000–)	Clamp, Hose, Wormdrive, 0.25–0.62d, .31w	3
10	87738	(008000–)	Hose, Fuel, 0.18id, 29.0l	1
11	08709	(008000–)	Nut, Hex, Lock, M8 X 1.25, Nl	2
12	39277	(008000–)	Screw, Hex, M8 X 1.25 X 25, 8.8	2
13	32491	(008000–)	Washer, Flat, 0.31, Std	5
14	1054382	(008000–)	Tank, Coolant, 03.6w 04.1hi 05.5l,1liter	1
15	1014843	(008000–)	Hose, Afmkt, Coolant Recvy, 05ft	1
16	53466	(008000–)	Clamp, Cable, Stl, 1.50d X 1.00w, 1hole	1
17	16931	(008000–)	Screw, Hex, M8 X 1.25 X 20, 8.8	1

Fig. 21 – Engine Fuel Tank Group, Gasoline

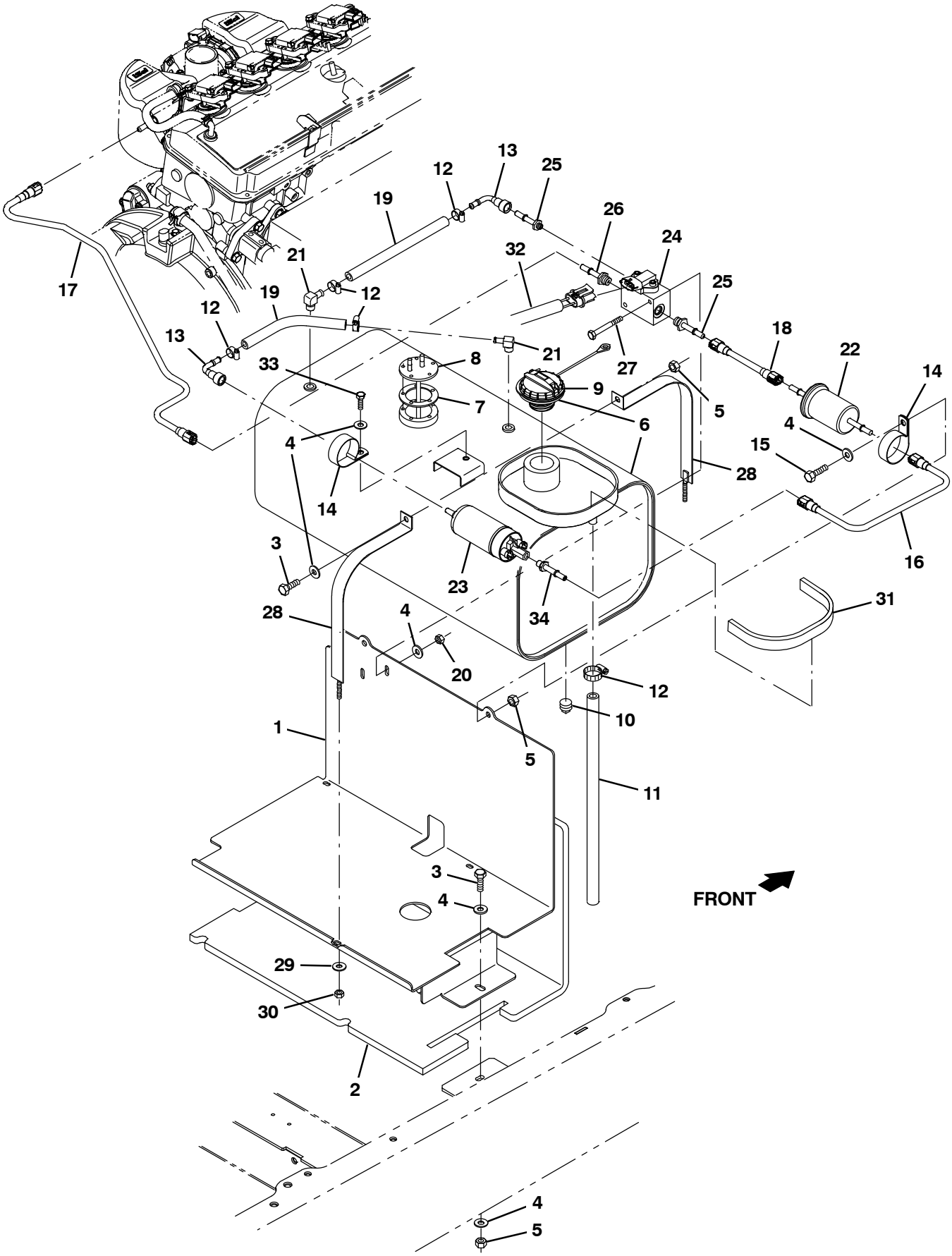

354418 – M20, T20

Fig. 21 – Engine Fuel Tank Group, Gasoline

	Ref.	Part No.	Serial Number	Description	Qty.
	1	1026550	(008000–)	Tray Wldt, Fuel	1
	2	1026759	(008000–)	Insulation, Flame–Retardant, 0.5	1
	3	39277	(008000–)	Screw, Hex, M8 X 1.25 X 25, 8.8	3
	4	32491	(008000–)	Washer, Flat, 0.31, Std	7
	5	08709	(008000–)	Nut, Hex, Lock, M8 X 1.25, Nl	4
▽	6	9003610	(008000–)	Tank, Fuel, 11.2gal, Gas, Replmt [2007]	1
▲	7	1033897	(008000–)	Gasket, Sender, Fuel	1
▲	8	1033901	(008000–)	Send–Unit, Fuel [2007]	1
▲	9	1032812	(008000–)	Cap, Fuel, Tank	1
▲	10	48126	(008000–)	Fitting, Pipe, Plug, Pm02, Sq Head	1
	11	1023482	(008000–)	Hose, Fuel, 0.50id, 21.0l	1
	12	54333	(008000–)	Clamp, Hose, Wormdrive, 0.31–0.88d, .31w	5
	13	1013086	(008000–)	Connector, Fuel, Qf	2
	14	1011895	(008000–)	Clamp, Cable, Stl, 2.00d X 0.75w, 1hole	2
	15	06956	(008000–)	Screw, Hex, M8 X 1.25 X 45, 8.8	2
	16	1034676	(008000–)	Fuelline, .31d Str/Str,Plstc[M20/T20 07]	1
	17	1071388	(008000–)	Fuelline, .31d Str/Str, Plstc [Mit 2013]	1
	18	1012248	(008000–)	Fuelline, .31d Str/Str, Plstc	1
	19	1033746	(008000–)	Hose, Fuel, 0.31id [Evap Emission 07]	2
	20	08708	(008000–)	Nut, Hex, Lock, M6 X 1.00, Nl	2
	21	9000355	(008000–)	Fitting, Brs, E90, Em05/Pm04	2
	22	372440	(008000–)	Filter, Fuel [Gm 1.6l/3.0l]	1
	23	9006592	(008000–)	Pump, Fuel	1
	24	1028924	(008000–)	Manifold, Gas, Relief, Valve	1
	25	1029293	(008000–)	Fitting, Fuel, Str, 0.56–18 [07 Eng]	2
	26	1029295	(008000–)	Fitting, Fuel, Str, 0.38–24 [07 Eng]	1
	27	06949	(008000–)	Screw, Hex, M6 X 1.0 X 50, 8.8	2
	28	1025229	(008000–)	Strap, Tank, Gas	2
	29	32483	(008000–)	Washer, Flat, 0.25, Sae	2
	30	32981	(008000–)	Nut, Hex, Lock, .25–20, Nl	2
	31	62595–15	(008000–)	Molding, Trim, Pvc, .08–.11 13.2l	1
	32	385009	(008000–)	Harness, Manifold, Gas	1
	33	16931	(008000–)	Screw, Hex, M8 X 1.25 X 20, 8.8	1
	34	9019145	(008000–)	Fitting, Fuel, Str, M10x1.0	1

Fig. 22 – Engine Fuel Tank Group, LPG

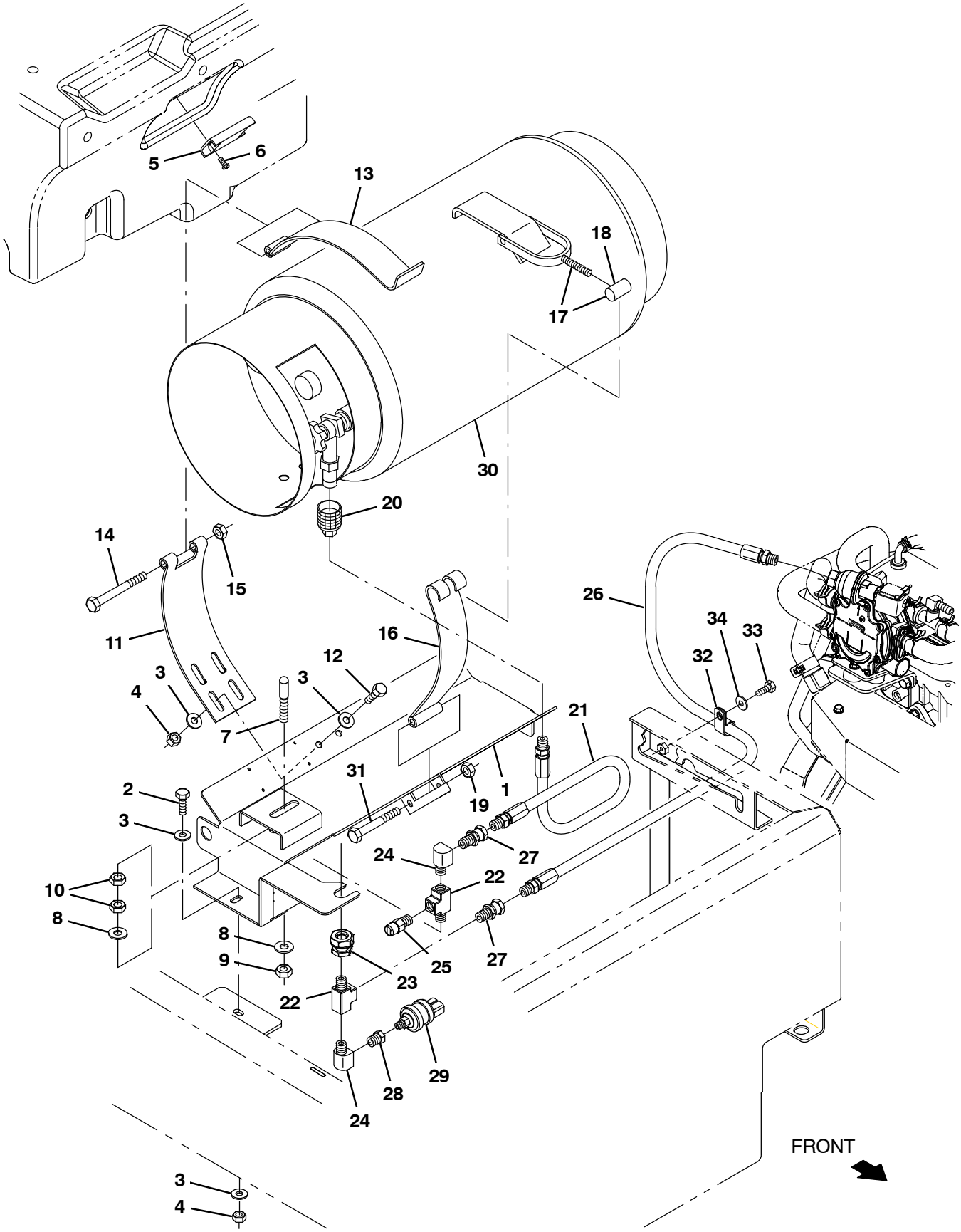

354419

Fig. 22 – Engine Fuel Tank Group, LPG

	Ref.	Part No.	Serial Number	Description	Qty.
	1	1017947	(008000–)	Tray Wldt, Lpg	1
	2	39277	(008000–)	Screw, Hex, M8 X 1.25 X 25, 8.8	2
	3	32491	(008000–)	Washer, Flat, 0.31, Std	8
	4	08709	(008000–)	Nut, Hex, Lock, M8 X 1.25, Nl	4
	5	63378	(008000–)	Magnet, Drive Brush	1
	6	09200	(008000–)	Screw, Pan, M5 X 0.8 X 12, Ss	2
	7	1024934	(008000–)	Pin, Locating, Lpg	1
	8	32492	(008000–)	Washer, Flat, 0.38 Std	2
	9	41430	(008000–)	Nut, Hex, Lock, M10 X 1.5, Nl	1
	10	32716	(008000–)	Nut, Hex, Jam, M10 X 1.5, Ss	2
	11	58589	(008000–)	Strap, Mtg, Tank, Lpg	1
	12	16931	(008000–)	Screw, Hex, M8 X 1.25 X 20, 8.8	2
	13	57297	(008000–)	Strap, Mtg, Tank, Lpg, Hinge	1
	14	35710	(008000–)	Screw, Hex, .38–16 X 3.75, 5	1
	15	59156	(008000–)	Nut, Hex, Lock, .38–16, Nl, Ss	1
	16	58590	(008000–)	Strap, Mtg, Tank, Lpg	1
▽	17	53400–1	(008000–)	Latch Assy, Mtg, Tank, Lpg, W/Nut	1
▲	18	53400–4	(008000–)	Nut, Adj, Mtg, Tank, Lpg	1
	19	36643	(008000–)	Nut, Hex, Lock, .38–16, Nl, Thin	1
	20	26496	(008000–)	Fitting, Brs, Qdc, Pf04, Lpg Fem	1
	21	22308–6	(008000–)	Hose, Lpg, Med05, Pm04str/Sm04str, 14.0l	1
	22	150709	(008000–)	Fitting, Brs, Tee, Pf04/Pf04/Pm04, Run	2
	23	78122	(008000–)	Fitting, Brs, Str, Pf04/Pf04, Bh	1
	24	27048	(008000–)	Fitting, Brs, E90, Pf04/Pm04	2
	25	24047	(008000–)	Valve, Lpg, Press Relief [Rego]	1
	26	19760	(008000–)	Hose, Lpg, Med05, Pm04str/Sm04str, 55.0l	1
	28	17414	(008000–)	Fitting, Hyd, Str, Pf02/Pm04	1
	27	11442–23	(008000–)	Fitting, Pipe, Str, Pm04/Sf04	2
	29	23156	(008000–)	Switch, Press, 12vdc 08a Spst Nc 0070psi	1
	30	24928–1	(008000–)	Tank, Lpg, 33lb, W/ Gauge [Empty, Liq]	1
	31	35707	(008000–)	Screw, Hex, .38–16 X 3.00, 5	1
	32	67767	(008000–)	Clamp, Cable, Stl, 0.69d X 0.62w, 1hole	1
	33	06942	(008000–)	Screw, Hex, M6 X 1.00 X 16, 8.8	1
	34	32483	(008000–)	Washer, Flat, 0.25, Sae	1

Fig. 23 – Battery and Electrical Group

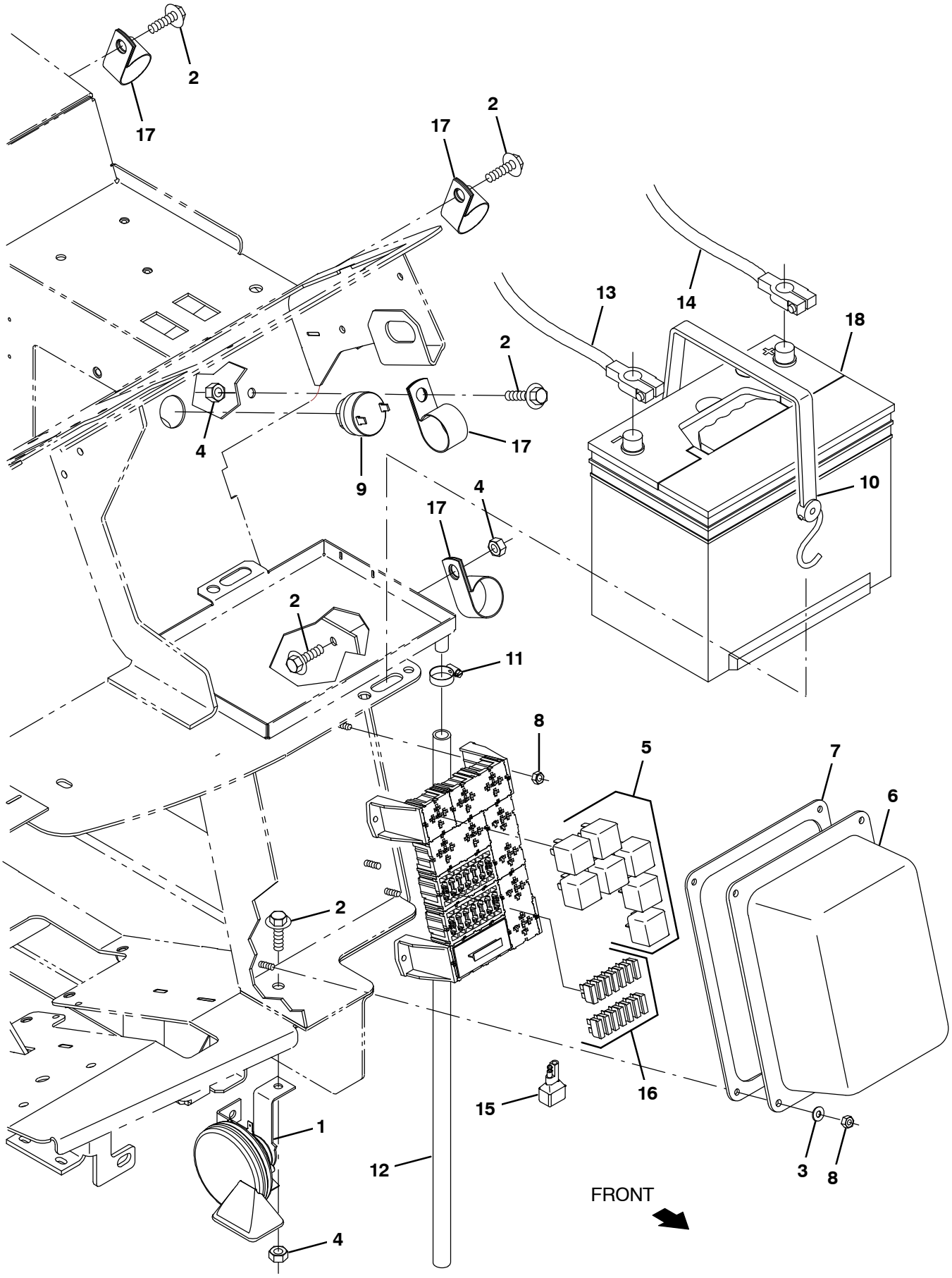

354425 – M20, T20, G/LP

Fig. 23 – Battery and Electrical Group

Ref.	Part No.	Serial Number	Description	Qty.
1	369704	(008000–)	Horn, 12vdc, Dba [Wolo]	1
2	1037346	(008000–)	Screw, Hex, M8 X 1.25 X 25, 9.8, Sems	5
3	19066	(008000–)	Washer, Flat, #10	4
4	08709	(008000–)	Nut, Hex, Lock, M8 X 1.25, Nl	3
5	57804	(008000–)	Relay, 12vdc, 40a, Spdt N/O	7
6	1024274	(008000–)	Cover, Fuse, Block	1
7	1026576	(008000–)	Gasket, Cover, Fuse Block	1
8	06549	(008000–)	Nut, Hex, Lock, M5 X 0.8, Nl	8
9	1021290	(008000–)	Alarm, Warning [Sonalert, St628]	1
10	33671	(008000–)	Strap, Rbr, Tie–Down, 2/Hooks 19.0l	1
11	54333	(008000–)	Clamp, Hose, Wormdrive, 0.31–0.88d, .31w	1
12	20778	(008000–)	Hose, Pvc, Clr, 0.50id 0.69od 30.00l	1
13	1071481	(008000–)	Cable, Battery, 2ga, 62l, Blk	1
14	1071482	(008000–)	Cable, Battery, 2ga, 60l, Red	1
15	222290	(008000–)	Diode, Ele, Plug	1
16	762514	(008000–)	Fuse, 015a	14
17	53466	(008000–)	Clamp, Cable, Stl, 1.50d X 1.00w, 1h	4
18	10137	(008000–)	Battery, 12vdc, 0475cca, Ah, Wet	1

Fig. 24 – Wheel Group, Front Drive

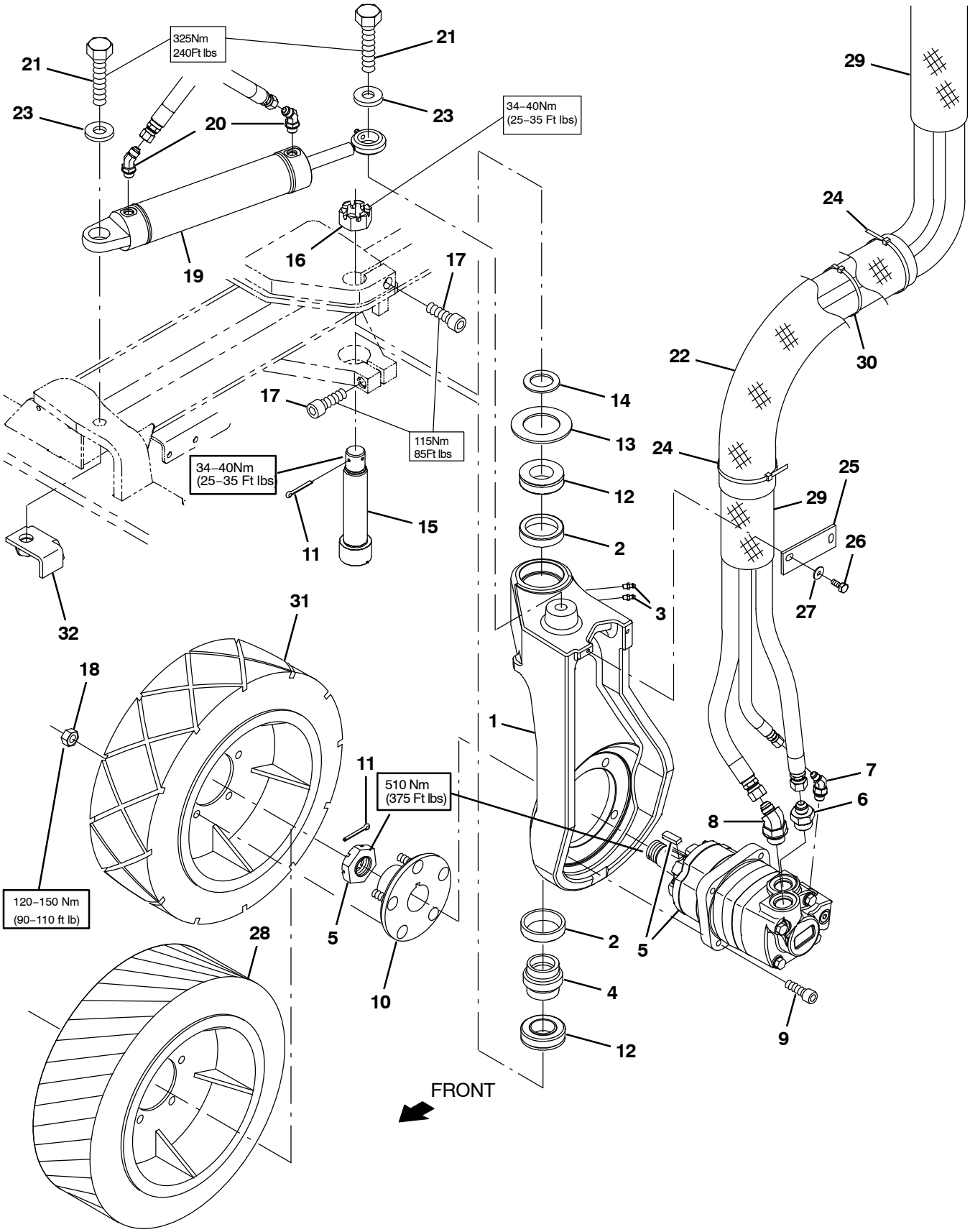

354426 – M20, T20

Fig. 24 – Wheel Group, Front Drive

	Ref.	Part No.	Serial Number	Description	Qty.
	1	1071061	(008000–)	Housing, Sppt, Front Wheel	1
	2	51338	(008000–)	Bearing, Cup, 2.56d 0.55w	2
	3	47801	(008000–)	Fitting, Grease, Str Pm04 .63l	2
	4	374560	(008000–)	Seal, Drive, Rear, Grease Cav	1
	5	379609	(008000–)	Motor, Hyd, Gear, Int 19.0 Bi–Dir 3000 (See Breakdowns)	1
	6	42223	(008000–012314)	Fitting, Hyd, Str, Jm10/Om12	1
	6	42227	(012315–)	Fitting, Hyd, Str, Jm08/Om12	1
	7	393215	(008000–)	Fitting, Hyd, E45, Jm04/Om06	1
	8	1024249	(008000–012314)	Fitting, Hyd, E45, Jm10/Om12	1
	8	1258930	(012315–)	Fitting, Hyd, E45, Jm08/Om12	1
	9	19583	(008000–)	Screw, Soc, .50–13 X 1.50, Al	4
▽	10	54087	(008000–)	Hub Assy, Wheel, 5 Bolt 4.50bc Taper B	1
▲		32126	(008000–)	Stud, Wheel, .50–20 X 1.50l, 0.370th	5
	11	08180	(008000–)	Pin, Cotter, .125 X 2.00	2
	12	51339	(008000–)	Bearing, Cone, 1.38b 0.71w	2
	13	374563	(008000–)	Washer, Flat, 2.16b 3.50d .16, Felt	1
	14	54051	(008000–)	Washer, Flat, 1.39b 2.12d .13, Stl	1
	15	73281	(008000–)	Bolt, Shld, 1.37d X 5.13l,1.1–18 Drilled	1
	16	54052	(008000–)	Nut, Hex, Sltd, 1.12–18	1
	17	72926	(008000–)	Screw, Soc, M16 X 2.0 X 50, 12.9	2
	18	24339	(008000–)	Nut, Wheel, .50–20 X 60 Angle	5
	19	1034270	(008000–)	Cylinder, Hyd, 2.0b,15.2l,09.00strk,3000	1
	20	47522	(008000–)	Fitting, Hyd, E45, Jm06/Om06	2
	21	77345	(008000–)	Screw, Hex, .75–10 X 3.25, G5	1
	22	82832	(008000–)	Sleeve, Nyl, 2.38id 25.0l	1
	23	1073487	(008000–)	Washer, Flat, .781b 1.63od .16, Stl, Blk	2
	24	49266	(008000–)	Tie, Cable, Nyl, 07.3l .19w 1.8 Max D	2
	25	1052521	(008000–)	Bar, Flat, Stl 0.19, 01.50 X 04.1l	1
	26	16931	(008000–)	Screw, Hex, M8 X 1.25 X 20, 8.8	2
	27	32491	(008000–)	Washer, Flat, 0.31, Std	2
	28	1061973	(008000–)	Tire, Drive, Scrbr, Pu, Grey, 18.0X6.0 (Optional Polyurethane)	1
	29	57315	(008000–)	Sleeve, Nyl, #37 05.0l	2
	30	49266	(008000–)	Tie, Cable, Nyl, 07.3l .19w 1.8 Max D	2
	31	1059343	(008000–)	Tire, Drive, Scrbr, Non–Skid, 18.0X6.0	1
	32	1060521	(008000–)	Bracket, Mtg, Sppt	1

Fig. 25 – Wheel Group, Rear

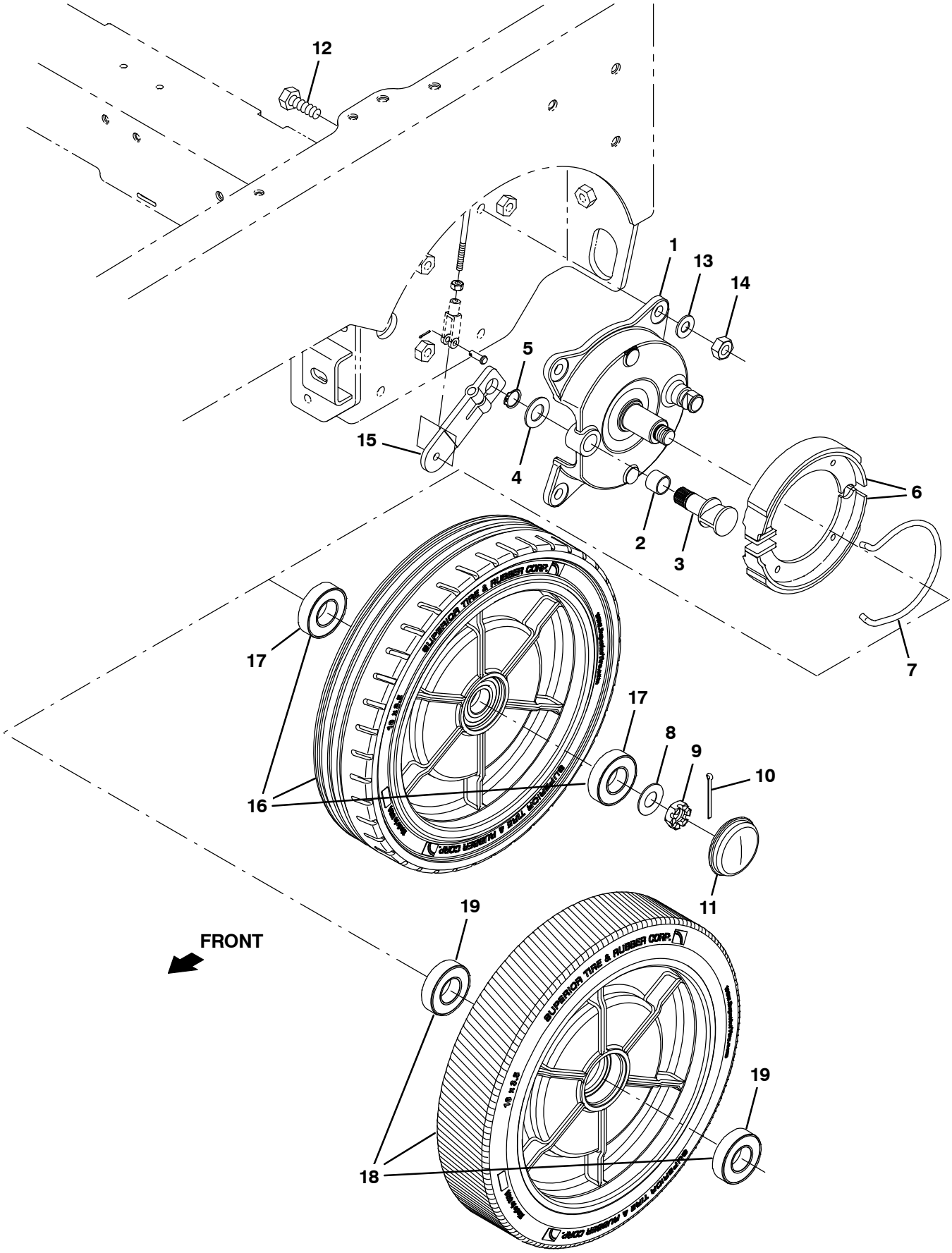

354427 – M20, T20

Fig. 25 – Wheel Group, Rear

	Ref.	Part No.	Serial Number	Description	Qty.
▽		360023	(008000–)	Brake Assy, Drum, Mech, 07.0d 1.2w	2
▲	1	360270	(008000–)	Plate, Backing, Brake	1
▲	2	360271	(008000–)	Bushing, Sleeve, 0.78b 0.86d 0.93l, Bnz	1
▲	3	360272	(008000–)	Cam, Plt, Brake [Nickel]	1
▲	4	360273	(008000–)	Washer, Flat, M21.0b X 37d X 3	1
▲	5	360274	(008000–)	Retainer, Ring, Brake	1
▲	6	360275	(008000–)	Shoe, Brake, 180 X 30mm	2
▲	7	360276	(008000–)	Spring, Wir, 0.25d, Return, Brake	1
	8	49145	(008000–)	Washer, Flat, 0.76b 1.50d .06, Ss	2
	9	86659	(008000–)	Nut, Hex, Sltd, .75–16	2
	10	08171	(008000–)	Pin, Cotter, .156 X 2.00	2
	11	54390	(008000–)	Cap, Hub, Dust 2.57d 0.77l	2
	12	06969	(008000–)	Screw, Hex, M12 X 1.75 X 40, 8.8	8
	13	32486	(008000–)	Washer, Flat, 0.50 Sae	8
	14	08711	(008000–)	Nut, Hex, Lock, M12 X 1.75,Nl	8
	15	360802	(008000–)	Arm, Lever, Brake, 4.1 [Knott]	2
▽	16	1076240	(008000–)	Tire Assy, Idler, 16.0 X 3.5, Rubber	2
▲	17	360074	(008000–)	Bearing, Ball, 1.18b 2.44d 0.63w	2
▽	18	1076680	(008000–)	Tire, Idle, 16 X 3.5, Pu, Siped Tread(Optional Polyurethane)	2
▲	19	360074	(008000–)	Bearing, Ball, 1.18b 2.44d 0.63w	2

Fig. 26 – Brake Pedal Linkage Group

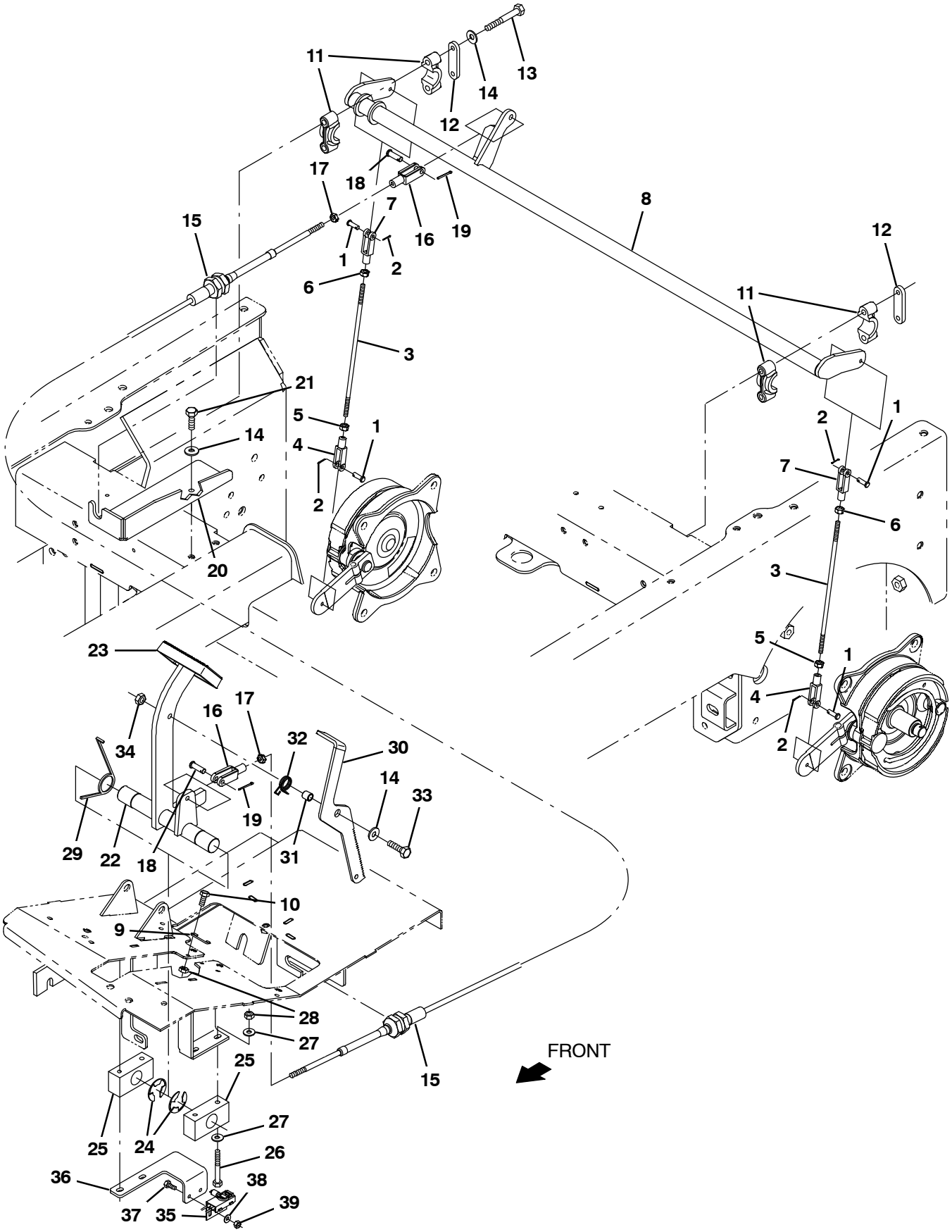

354428 – M20, T20

Fig. 26 – Brake Pedal Linkage Group

Ref.	Part No.	Serial Number	Description	Qty.
1	14605	(008000–)	Pin, Clevis, 0.25d X 0.75l	4
2	08170	(008000–)	Pin, Cotter, .062 X 0.50	4
3	364347	(008000–)	Rod	2
4	14595–1	(008000–)	Clevis, Adj, 0.25 Pin, 0.25–28 Rh, Pl	2
5	364948	(008000–)	Nut, Hex, Std, .25–28, Lh	2
6	01714	(008000–)	Nut, Hex, Std, .25–28	2
7	364864	(008000–)	Clevis, Adj, 0.25pin, 0.25–28left Pl	2
8	1022031	(008000–)	Shaft Wldt, Brake	1
9	71367	(008000–)	Spring, Wir, 0.08d, Brake, Parking	1
10	06942	(008000–)	Screw, Hex, M6 X 1.0 X 16, 8.8	2
11	381502	(008000–)	Bearing, Split, 1.00b	4
12	382224	(008000–)	Plate, Sppt	2
13	39279	(008000–)	Screw, Hex, M8 X 1.25 X 70, 8.8	4
14	32491	(008000–)	Washer, Flat, 0.31, Std	7
15	1025495	(008000–)	Cable, Push / Pull, 063.0l 4.0, .31–24	1
16	58311	(008000–)	Clevis, Adj, 0.31pin, 0.31–24	2
17	20170	(008000–)	Nut, Hex, Jam, .31–24	2
18	69582	(008000–)	Pin, Clevis, 0.31d X 1.00l	2
19	08179	(008000–)	Pin, Cotter, .094 X 1.00	2
20	1022736	(008000–)	Bracket, Mtg, Cable	1
21	16931	(008000–)	Screw, Hex, M8 X 1.25 X 20, 8.8	2
22	1022243	(008000–)	Shaft Wldt, Pedal, Brake	1
23	51109	(008000–)	Pad, Pedal, Brake, 3.96l 2.36w 0.75	1
24	23788	(008000–)	Ring, Retaining, Ext, 0.98d, [E–Ring]	2
25	86751	(008000–)	Bearing, Pillowblock, 1.02b [Solid Pye]	2
26	06548	(008000–)	Screw, Hex, M6 X 1.0 X 60, 8.8	4
27	32490	(008000–)	Washer, Flat, 0.25 Std	8
28	08708	(008000–)	Nut, Hex, Lock, M6 X 1.0, Nl	6
29	54607	(008000–)	Spring, Tors, 1.13id .12wir 02.3coil Rh	2
30	1025487	(008000–)	Pedal, Brake, Lock	1
31	46563	(008000–)	Bushing, Sleeve, 0.37b 0.50d 0.50l, Oib	1
32	59009	(008000–)	Spring, Tors, 0.75id .06wir 02.8coil	1
33	06955	(008000–)	Screw, Hex, M8 X 1.25 X 35, 8.8	1
34	08709	(008000–)	Nut, Hex, Lock, M8 X 1.25, Nl	1
35	59962	(008000–)	Switch, Snap, 15a Nc, Rlr	1
36	1228195	(008000–)	Bracket, Mtg, Switch	1
37	24199	(008000–)	Screw, Hex, M5 X 0.80 X 16, Ss	2
38	01683	(008000–)	Washer, Flat, 10, Ss	2
39	09739	(008000–)	Nut, Hex, Lock, M5 X 0.80, Nl, Ss	2

Fig. 27 – Directional Pedal Group

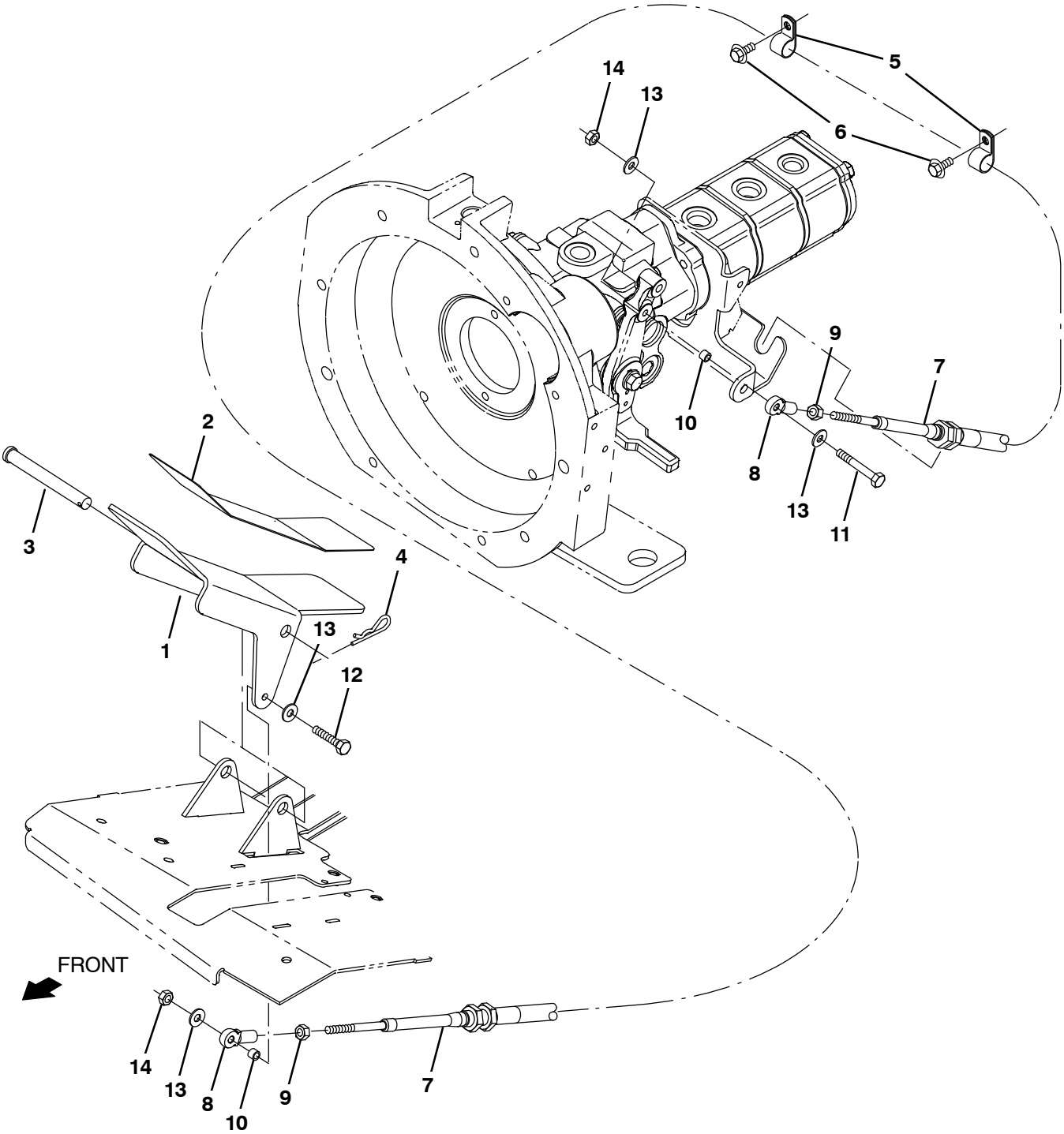

354429 – G/LP

Fig. 27 – Directional Pedal Group

Ref.	Part No.	Serial Number	Description	Qty.
1	1025140	(008000–)	Pedal, Propel	1
2	58819	(008000–)	Tread, Non–Skid, 03.0w 11.6l	1
3	59668	(008000–)	Pin, Clevis, 0.50 D X 4.50l	1
4	08182	(008000–)	Pin, Cotter, .125 X 1.00	1
5	67767	(008000–)	Clamp, Cable, Stl, 0.69d X 0.62w, 1h	2
6	361339	(008000–)	Screw, Hex, M6 X 1.0 X 16, Fmg	2
7	1022345	(008000–)	Cable, Push / Pull, 098.0l .25–28/.25–28	1
8	68866	(008000–)	Rod–End, .25–28rh Fem 0.25b [Teflon]	2
9	01714	(008000–)	Nut, Hex, Std, .25–28	2
10	65441	(008000–)	Tube, 00.38d 00.26b 00.3l Stl Plt	2
11	41399	(008000–)	Screw, Hex, .25–20 X 2.25, Ss	1
12	42180	(008000–)	Screw, Hex, .25–20 X 1.75, Ss	1
13	32490	(008000–)	Washer, Flat, 0.25 Std	4
14	41169	(008000–)	Nut, Hex, Lock, .25–20, Nl, Ss	2

Fig. 28 – Hydraulic Pump Linkage Group

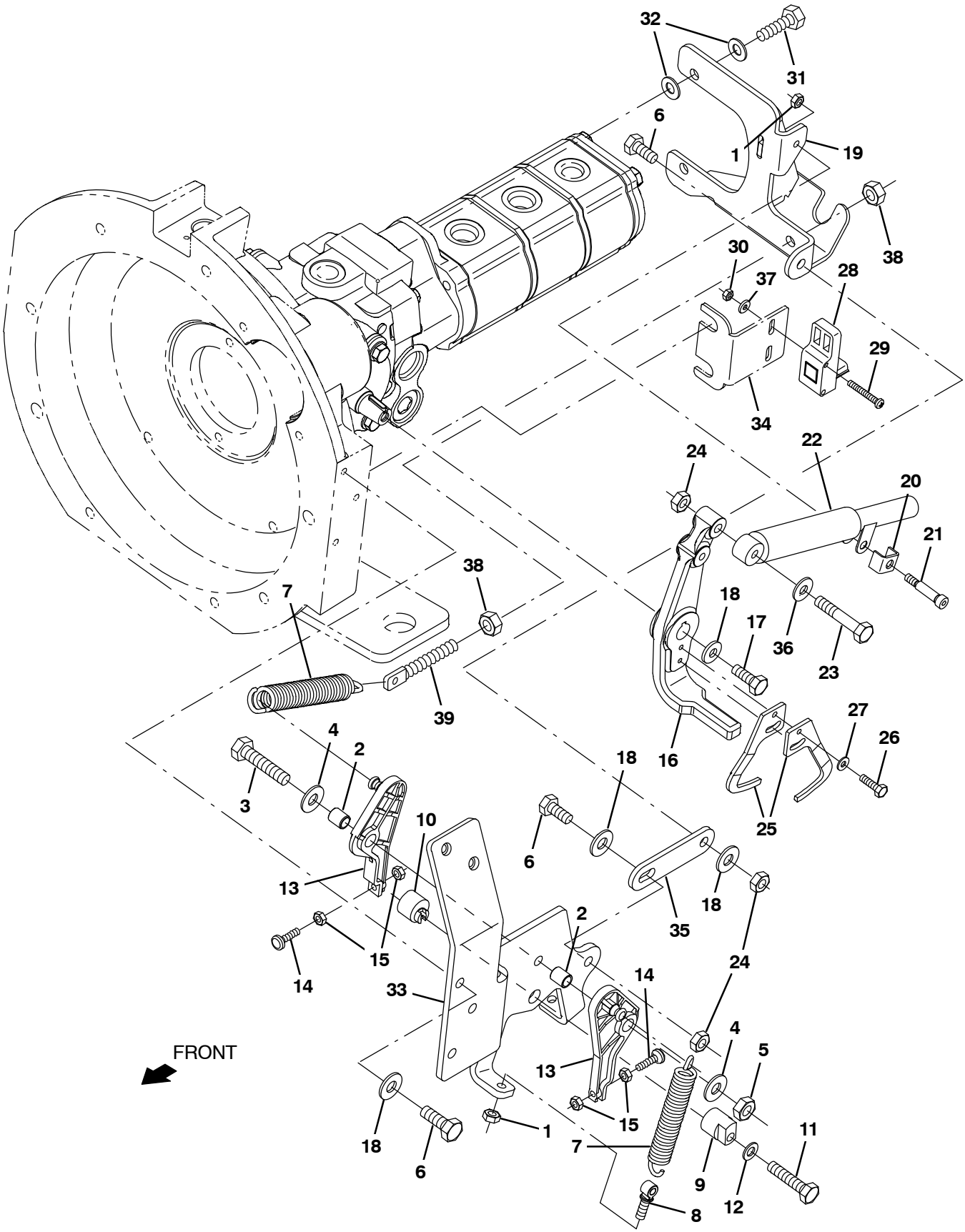

356301 – G/LP

Fig. 28 – Hydraulic Pump Linkage Group

Ref.	Part No.	Serial Number	Description	Qty.
1	75934	(008000–)	Nut, Hex, Lock, .25–20, Nl	2
2	63234	(008000–)	Tube, 00.50d 00.38b 00.6l Stl	2
3	27991	(008000–)	Screw, Hex, .38–16 X 2.25, G5	1
4	32492	(008000–)	Washer, Flat, 0.38 Std	2
5	36643	(008000–)	Nut, Hex, Lock, .38–16, Nl, Thin	1
6	39277	(008000–)	Screw, Hex, M8 X 1.25 X 25, 8.8	5
7	11842	(008000–)	Spring, Extn, 0.75od X 0.12wir, 4.3l	2
8	48079	(008000–)	Bolt, Eye, .25–20 X 1.40 X .25 Eye	1
9	53947	(008000–)	Cam, Centering, Pintle	1
10	54655	(008000–)	Cam, Centering, Pintle	1
11	74440	(008000–)	Screw, Hex, M8 X 1.25 X 40, Ss, Nl	1
12	39349	(008000–)	Washer, Flat, 0.31 Sae	1
13	53953	(008000–)	Arm, Cntrl, Pintle, Centering	2
14	54205	(008000–)	Bumper, Rbr, 0.5d 0.16t M5 X 08	2
15	50335	(008000–)	Nut, Hex, Std, M5 X 0.8, 8	4
16	1027233	(008000–)	Arm, Pintle	1
17	83879	(008000–)	Screw, Hex, .31–24 X 0.75, Nl	1
18	41186	(008000–)	Washer, Belleville, .31	6
19	1027313	(008000–)	Bracket Wldt, Propel, Pintle	1
20	84170	(008000–)	Bracket, Retainer, Safety	1
21	16213	(008000–)	Bolt, Shld, .31d X 1.00, .25–20	1
22	73411	(008000–)	Shock Absorber, 2.3 Strk	1
23	39278	(008000–)	Screw, Hex, M8 X 1.25 X 50, 8.8	1
24	08709	(008000–)	Nut, Hex, Lock, M8 X 1.25, Nl	3
25	1022787	(008000–)	Arm [Positioning]	2
26	09252	(008000–)	Screw, Hex, M5 X 0.8 X 20, 8.8	2
27	01683	(008000–)	Washer, Flat, #10 Ss	2
28	1022779	(008000–)	Sensor, Spd / Dir, 6–30vdc	1
29	09198	(008000–)	Screw, Pan, M4 X 0.7 X 35, Ss	2
30	33932	(008000–)	Nut, Hex, Lock, M4 X 0.7, Nl, Ss	2
31	46559	(008000–)	Screw, Hex, .38–16 X 1.25, Nl	2
32	32485	(008000–)	Washer, Flat, 0.38 Sae	4
33	1070798	(008000–)	Bracket, Propel, G/Lpg [Mit 2013]	1
34	1070819	(008000–)	Angle, Mtg	1
35	1032399	(008000–)	Strap, Sppt	1
36	32490	(008000–)	Washer, Flat, 0.25 Std	1
37	19065	(008000–)	Washer, Flat, 0.19b 0.44d .05, Pl, 08	2
38	07786	(008000–)	Nut, Hex, Std, M8 X 1.25, Ss	2
39	386088	(008000–)	Bolt, Eye, M8 X 1.25 X 070mm, 05.50 Eye	1

Fig. 29 – Hopper Lift Arms Group

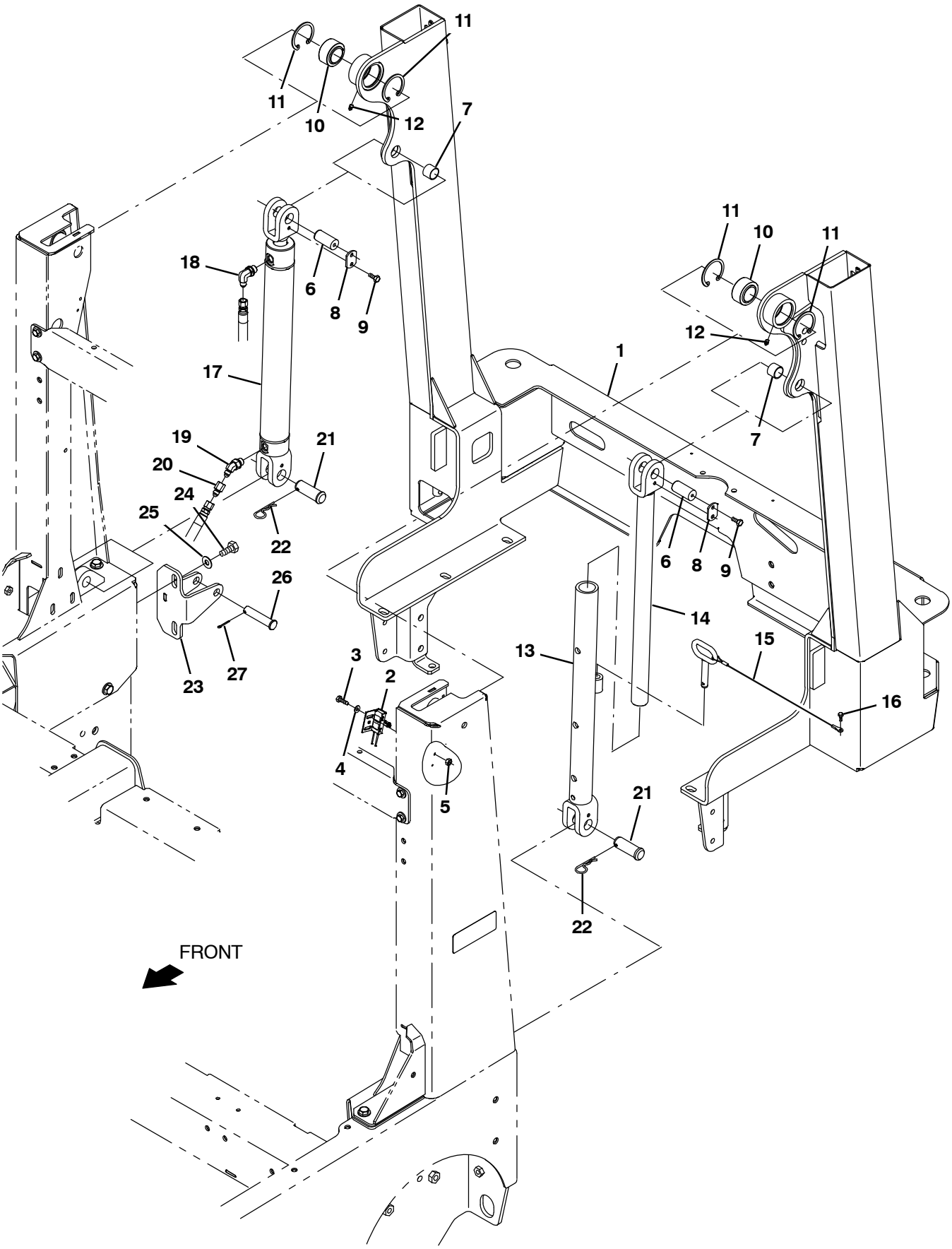

354430 – M20

Fig. 29 – Hopper Lift Arms Group

Ref.	Part No.	Serial Number	Description	Qty.
1	1069933	(008000–)	Frame Wldt, Lift, Hppr	1
2	23211	(008000–)	Switch, Snap, 15a No, Rlr	1
3	09252	(008000–)	Screw, Hex, M5 X 0.8 X 20, 8.8	2
4	19066	(008000–)	Washer, Flat, #10	2
5	07789	(008000–)	Nut, Hex, Flng, M5 X 0.8	2
6	1018226	(008000–)	Pin, 0.87d 01.8l, 1/M6 X 1.0, 1cham,Stl	2
7	364587	(008000–)	Bushing, Sleeve, 0.88b 1.00d 0.75l, Bnz	2
8	72897	(008000–)	Plate, Pin, Clevis, Upper	2
9	1040467	(008000–)	Screw, Hex, M6 X 1.0 X 20, 9.8, Sems	4
10	42120–1	(008000–)	Bearing, Self Align, 1.25b 2.00d	2
11	59542	(008000–)	Ring, Retaining, Int, 2.00d	4
12	07259	(008000–)	Fitting, Grease, Str Pm04 .47l	2
13	1018260	(008000–)	Tube Wldt, Arm, Safety	1
14	1018262	(008000–)	Rod Wldt, Arm, Safety	1
15	1018266	(008000–)	Pin, Arm, Safety	1
16	16944	(008000–)	Screw, Hex, M4 X 0.7 X 10, Fmg	1
17	1029646	(008000–)	Cylinder, Hyd, 2.0B 24.1L 15.00Strk 3000	1
18	47638	(008000–)	Fitting, Hyd, E90, Jm04/Om06	1
19	393215	(008000–)	Fitting, Hyd, E45, Jm04/Om06	1
20	1025904	(008000–)	Fitting, Hyd, Rst, Jf04/Jm04, .028	1
21	1018227	(008000–)	Pin, Clevis, 0.88d X 2.25l	2
22	02942	(008000–)	Pin, Cotter, Hair, 0.62d .120 Wir	2
23	1018275	(008000–)	Plate Wldt, Arm, Stop	1
24	09028	(008000–)	Screw, Hex, M10 X 1.5 X 25, Ss	2
25	01686	(008000–)	Washer, Flat, 0.44b 1.00d .08, Ss	2
26	1018276	(008000–)	Pin, Clevis, 0.62d X 2.91l	1
27	08179	(008000–)	Pin, Cotter, .094 X 1.00	1

Fig. 30 – Hopper and Debris Screen Group

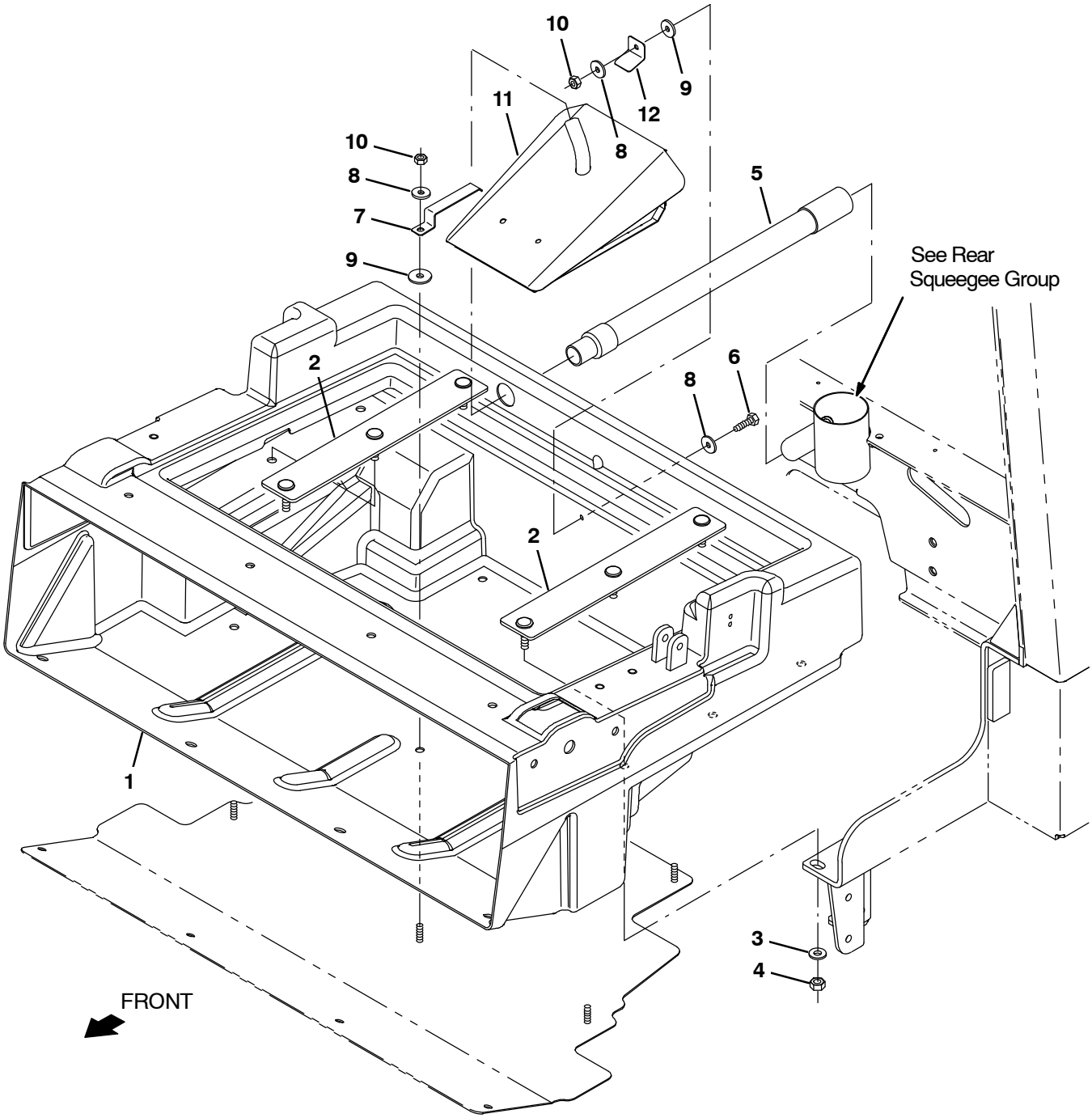

354431 – M20

Fig. 30 – Hopper and Debris Screen Group

Ref.	Part No.	Serial Number	Description	Qty.
1	1018300	(008000–)	Hopper, Debris, Rm–Hg, Trimmed	1
2	1018272	(008000–)	Bar, Mtg, Hppr	2
3	763042	(008000–)	Washer, Flat, Belleville, M10	6
4	08714	(008000–)	Nut, Hex, Lock, M10 X 1.5, Nl, Ss	6
5	1018239	(008000–)	Hose Assy, W/1cuff, 1.0d 09l 1.0/	1
6	09010	(008000–)	Screw, Hex, M8 X 1.25 X 25, Ss	1
7	1044323	(008000–)	Spring, Flat, Retainer, Angled Screen	1
8	1017218	(008000–)	Washer, Flat, 0.32b 1.00d .12, Ss	3
9	222268	(008000–)	Washer, Flat, 0.38b 1.25d .12, Neo	2
10	08713	(008000–)	Nut, Hex, Lock, M8 X 1.25, Nl, Ss	2
11	1039163	(008000–)	Screen Wldt, Hppr	1
12	1039215	(008000–)	Angle, Retainer	1

Fig. 31 – Hopper Cover and Dust Filter Group

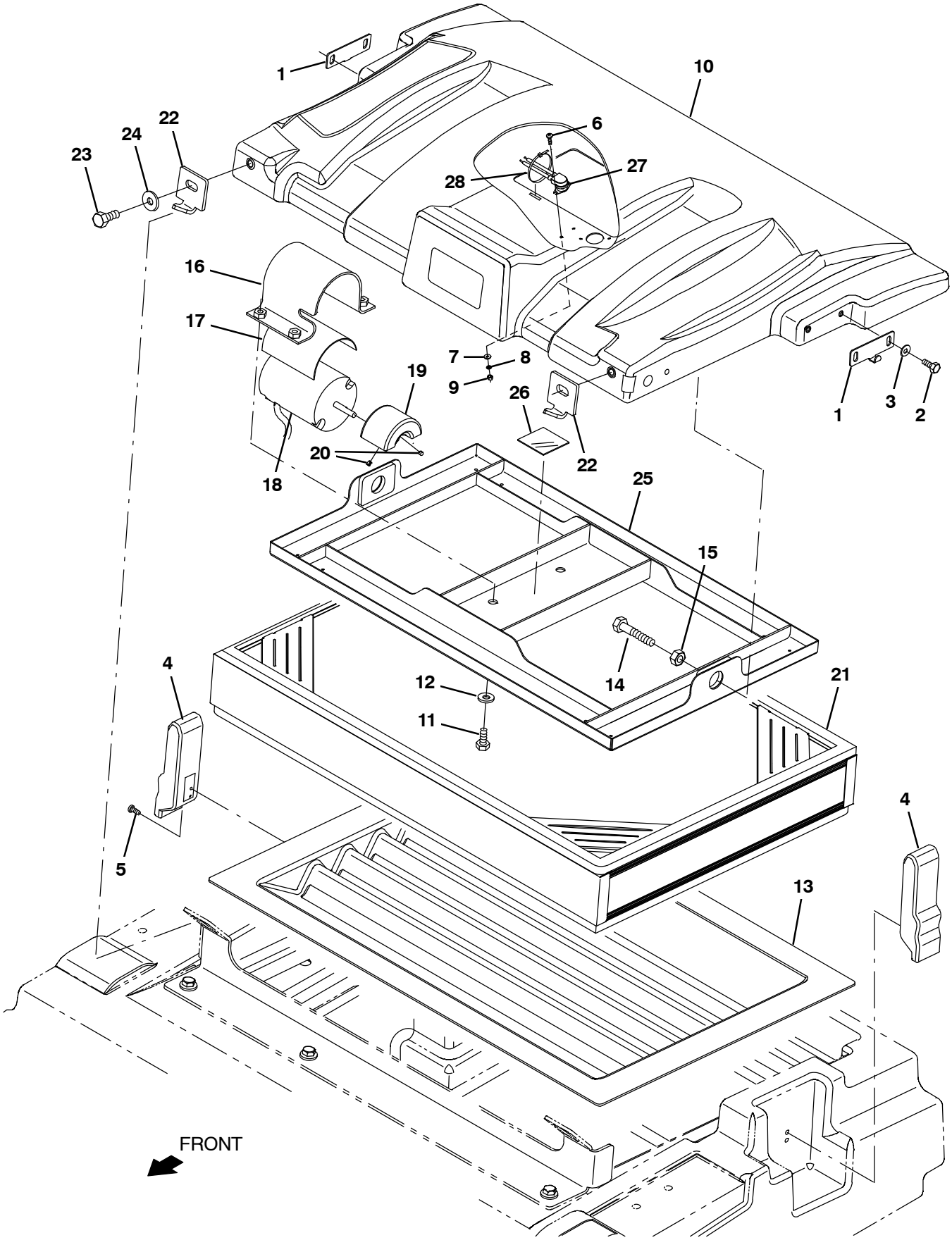

354432 – M20

Fig. 31 – Hopper Cover and Dust Filter Group

Ref.	Part No.	Serial Number	Description	Qty.
1	1041984	(008000–)	Bracket, Cover, Hppr	2
2	15678	(008000–)	Screw, Hex, M6 X 1.0 X 16, Ss	4
3	01684	(008000–)	Washer, Flat, 0.25, Ss	4
4	1222019	(008000–)	Latch, Yellow	2
5	09200	(008000–)	Screw, Pan, M5 X 0.8 X 12, Ss	4
6	06922	(008000–)	Screw, Pan, M3 X 0.5 X 20, 4.8	2
7	19064	(008000–)	Washer, Flat, #06	2
8	32975	(008000–)	Washer, Lock, Int, #06	2
9	01754	(008000–)	Nut, Hex, Std, M3 X 0.5, 8	2
10	1041006	(008000–)	Cover, Hppr	1
11	09740	(008000–)	Screw, Hex, M8 X 1.25 X 20, Ss	4
12	01685	(008000–)	Washer, Flat, 0.38b 0.88d .08, Ss	4
13	1037947	(008000–)	Tray, Perma–Filter	1
14	06963	(008000–)	Screw, Hex, M10 X 1.50 X 60, 8.8	2
15	39312	(008000–)	Nut, Hex, Std, M10 X 1.50	2
16	1037671	(008000–)	Strap, Mtg, Motor, .124.00W	1
17	36658	(008000–)	Strip, Rbr, 0.06 04.00w 05.0l Neo/60	1
18	1059542	(008000–)	Motor, Ele 12Vdc, Shakr	1
19	1053320	(008000–)	Weight, Eccentric	1
20	20634	(008000–)	Screw, Set, #10–24 X 0.25, Nl	2
21	1048295AM	(008000–)	Filter, Panl, Syn, 4.2 X 20.0 X 30.0	1
22	1018207	(008000–)	Bar, Mtg, Hppr Cover	2
23	09291	(008000–)	Screw, Hex, M10 X 1.5 X 20, Ss	2
24	1014563	(008000–)	Washer, Flat, 0.40b 1.12d .12, Ss	2
25	1037235	(008000–)	Shaker Wldt	1
26	36661	(008000–)	Strip, Rbr, 0.06 01.00W 04.0L	1
27	1056298	(008000–)	Switch, Temp, Sealed, Nc	1
28	763116	(008000–)	Tie, Cable, Nyl, 15.3L . W 4.5 Max D	1

Fig. 32 – Hopper Bumper Group

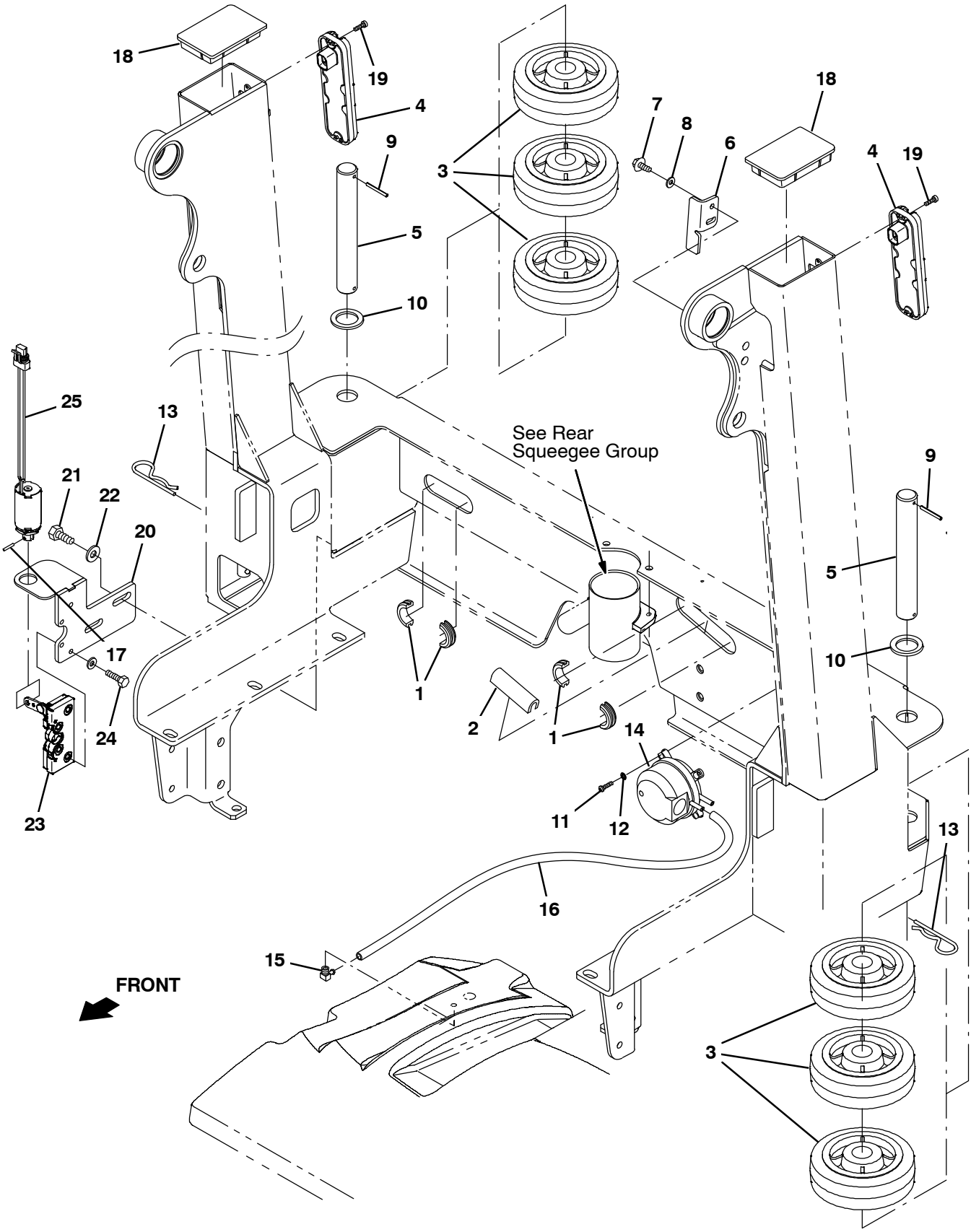

354433 – M20

Fig. 32 – Hopper Bumper Group

Ref.	Part No.	Serial Number	Description	Qty.
1	10632–13	(008000–)	Grommet, Rbr, 1.50id, F/1.8h, .19 Matl	2
2	50646	(008000–)	Molding, Trim, Pvc,.18–.31 07.5l	1
3	1060130	(008000–)	Wheel, 06.0d 2.00w 1.19b, Gray Rbr	6
4	1018208	(008000–)	Light, Tail, 12vdc	2
5	1053838	(008000–)	Pin, 30mmd X 215mml	2
6	1018240	(008000–)	Bracket, Mtg, Switch	1
7	361339	(008000–)	Screw, Hex, M6 X 1.0 X 16, Fmg	2
8	32483	(008000–)	Washer, Flat, 0.25 Sae	2
9	23146	(008000–)	Pin, Roll, .187d X 1.62l, .187/.192	2
10	1062566	(008000–)	Washer, Flat, 1.26B 1.88D .13, Stl, Pl	2
11	12323	(008000–)	Screw, Pan, M4 X 0.7 X 20, Ss	2
12	02938	(008000–)	Washer, Lock, Int, #08, Ss	2
13	34411	(008000–)	Pin, Cotter, Hair, 1.00d .178 Wir	2
14	1052885	(008000–)	Switch, Press, Adj [4–16 In Wtr]	1
15	32183	(008000–)	Fitting, Brs, E90, Pm02/Bm03	1
16	1031575	(008000–)	Hose, Afmkt, Vacuum, 0.16id, 03ft	1
17	20021	(008000–)	Pin, Roll, .125 D X 0.75l, .125/.129	1
18	1018293	(008000–)	Cap, Arm, Lift	2
19	06928	(008000–)	Screw, Pan, M4 X 0.7 X 20, 4.8	4
20	1018280	(008000–)	Plate Wldt, Mtg, Solenoid	1
21	12309	(008000–)	Screw, Hex, M12 X 1.75 X 30, Ss	2
22	32486	(008000–)	Washer, Flat, 0.50, Sae	2
23	21623	(008000–)	Latch	1
24	06944	(008000–)	Screw, Hex, M6 X 1.0 X 25, 8.8	4
25	1018274	(008000–)	Solenoid, Pull, 12vdc, Damper	1

Fig. 33 – Hopper Door Group

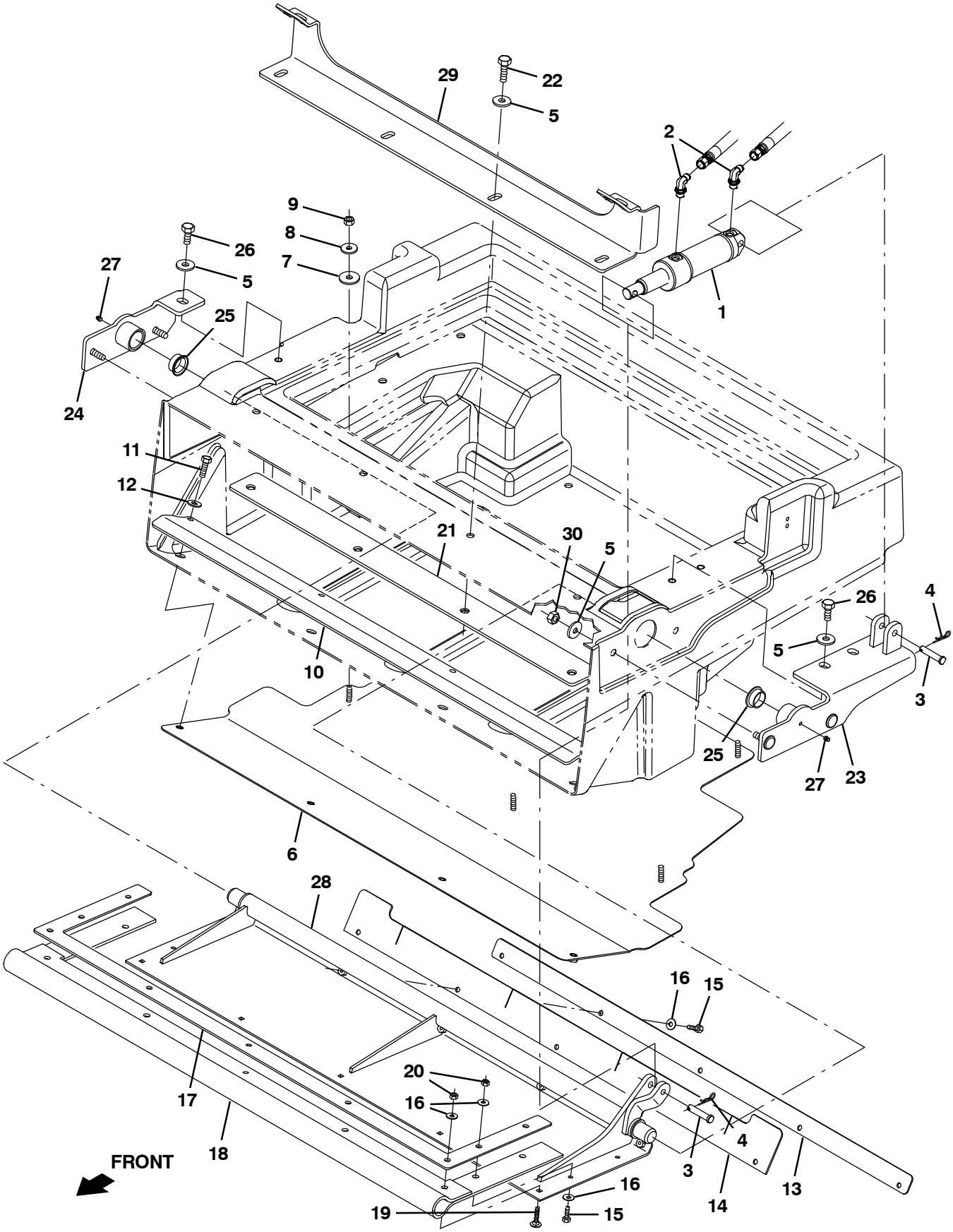

354434 – M20

Fig. 33 – Hopper Door Group

Ref.	Part No.	Serial Number	Description	Qty.
1	1038115	(008000–)	Cylinder, Hyd, 1.5b 07.8l 02.75strk 2500	1
2	77097	(008000–)	Fitting, Hyd, E90, Jm04/Om04	2
3	17461	(008000–)	Pin, Clevis, 0.37d X 1.75l	2
4	08179	(008000–)	Pin, Cotter, .094 X 1.00	2
5	1014563	(008000–)	Washer, Flat, 0.40b 1.12d .12, Ss	11
6	1018237	(008000–)	Plate, Bottom, Hppr	1
7	222268	(008000–)	Washer, Flat, 0.38b 1.25d .12, Neo	2
8	1017218	(008000–)	Washer, Flat, 0.32b 1.00d .12, Ss	2
9	08713	(008000–)	Nut, Hex, Lock, M8 X 1.25, Nl, Ss	2
10	1018236	(008000–)	Bracket, Lip, Hppr	1
11	09010	(008000–)	Screw, Hex, M8 X 1.25 X 25, Ss	4
12	01685	(008000–)	Washer, Flat, 0.31, Ss	4
13	1039155	(008000–)	Strap, Door, Dump	1
14	1018245	(008000–)	Seal, Door, Dump	1
15	08716	(008000–)	Screw, Hex, M6 X 1.0 X 20, Ss	9
16	01684	(008000–)	Washer, Flat, 0.25, Ss	14
17	1039149	(008000–)	Plate, Retainer, Door, Dump	1
18	1039157	(008000–)	Seal, Door, Dump	1
19	379791	(008000–)	Bolt, Carriage, M06 X 1.0 X 30	5
20	08712	(008000–)	Nut, Hex, Lock, M6 X 1.0, Ss, Nl	9
21	1018253	(008000–)	Bracket, Cover	1
22	12317	(008000–)	Screw, Hex, M10 X 1.5 X 30, Ss	4
23	1038123	(008000–)	Bracket Wldt, Pivot, Hppr Door, Lh	1
24	1038134	(008000–)	Bracket Wldt, Pivot, Hppr, Rh	1
25	367313	(008000–)	Bushing, Flng, 1.00b 1.13d 0.50l	2
26	09291	(008000–)	Screw, Hex, M10 X 1.5 X 20, Ss	3
27	07259	(008000–)	Fitting, Grease, Str Pm04 .47l	2
28	1039124	(008000–)	Door Wldt, Hppr	1
29	1044993	(008000–)	Bracket, Cover, Hopper	1
30	08714	(008000–)	Nut, Hex, Lock, M10 X 1.5, Nl, Ss	4

Fig. 34 – Cylindrical Scrub Brush Drive Group, Left Side

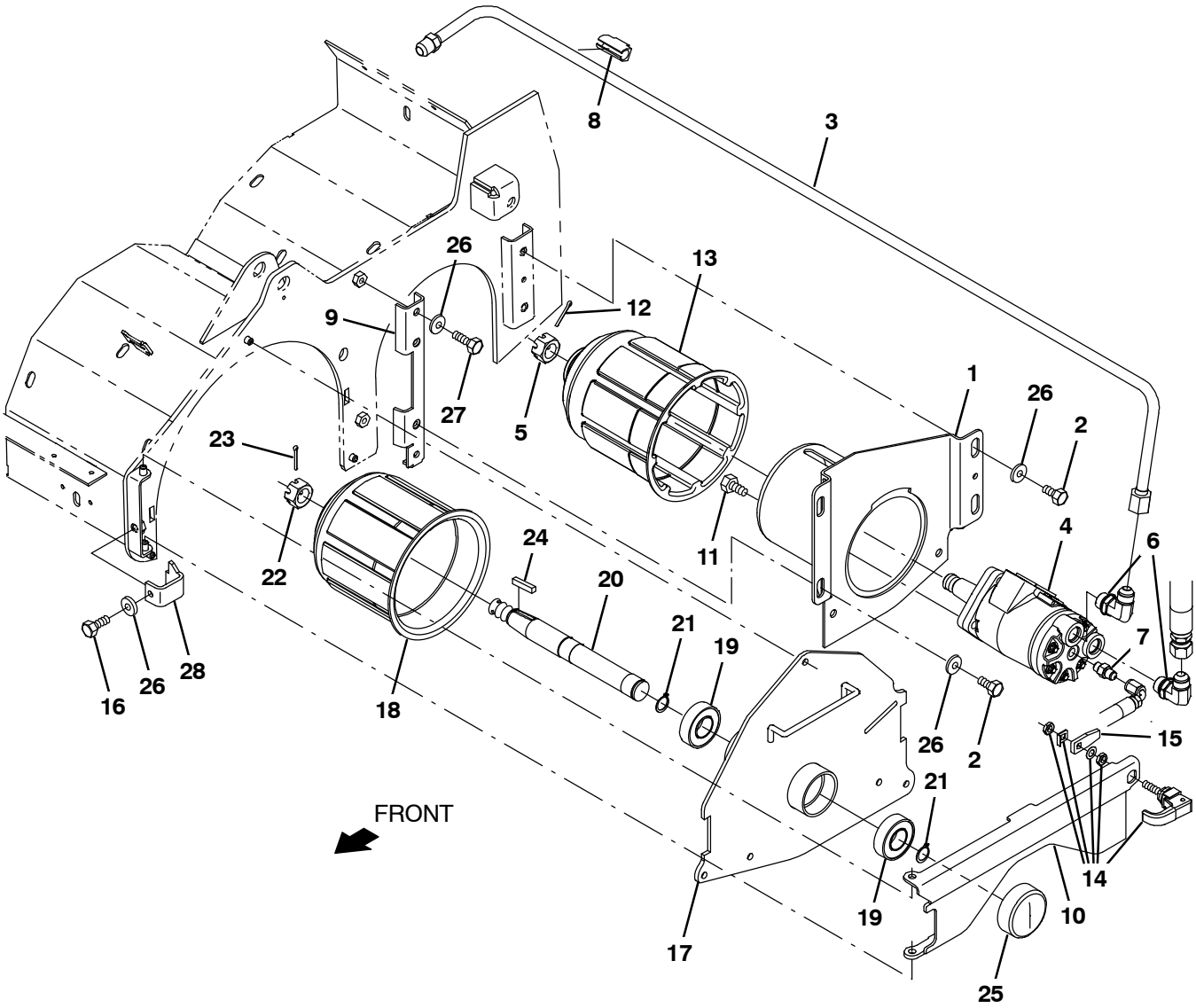

354435 – M20, T20

Fig. 34 – Cylindrical Scrub Brush Drive Group, Left Side

	Ref.	Part No.	Serial Number	Description	Qty.
	1	1021019	(008000–)	Housing Wldt, Brush, Drive	1
	2	15675	(008000–)	Screw, Hex, M8 X 1.25 X 16, Ss	4
	3	1023617	(008000–)	Tube, Hyd, 08 Jf08/Jm08	1
▽	4	1068811	(008000–)	Motor, Hyd, Gear, Int 04.5 Bi–Dir 1500	1
▲	5	39527	(008000–)	Nut, Hex, Sltd, .75–18	1
	6	44868	(008000–)	Fitting, Hyd, E90, Jm08/Om08	2
	7	55586	(008000–)	Fitting, Hyd, Str, Jm04/Om04	1
	8	1026080	(008000–)	Clamp, Hyd, 0.50d	1
	9	1054575	(008000–)	Bracket, Sppt	1
	10	1029964	(008000–)	Door Wldt, Brush	1
	11	01762	(008000–)	Screw, Hex, .38–16 X 0.75, Nl	4
	12	08175	(008000–)	Pin, Cotter, .125 X 1.25	1
	13	1057643	(008000–)	Plug Wldt, Drive, Brush, Sweep	1
	14	1065134	(008000–)	Latch, Cmpr, Yel Grip	1
	15	1026352	(008000–)	Pawl, Str	1
	16	09740	(008000–)	Screw, Hex, M8 X 1.25 X 20, Ss	1
▽		9012832	(008000–)	Idler Door Kit, Replmt [M20/T20/M30/T12]	2
▲	17	1054857	(008000–)	Door Wldt, Brush, Idler	1
▲	18	25686	(008000–)	Plug Wldt, Drive, Brush	1
▲	19	13534	(008000–)	Bearing, Ball, 0.98b 2.05d 0.59w	2
▲	20	56078	(008000–)	Shaft, Brush, Idler	1
▲	21	09005	(008000–)	Ring, Retaining, Ext, 1.00d, Basic	2
▲	22	12295	(008000–)	Nut, Hex, Sltd, M20 X 2.5, 8	1
▲	23	08175	(008000–)	Pin, Cotter, .125 X 1.25	1
▲	24	00927	(008000–)	Key, Sq, 0.25 X 0.25, 1.25l	1
▲	25	1074807	(008000–)	Cap, Vinyl, 57mmid X 23mml	1
	26	32491	(008000–)	Washer, Flat, 0.31, Std	7
	27	09010	(008000–)	Screw, Hex, M8 X 1.25 X 25, Ss	2
	28	1054682	(008000–)	Bracket, Retainer, Lh	1

Fig. 35 – Cylindrical Scrub Brush Drive Group, Right Side

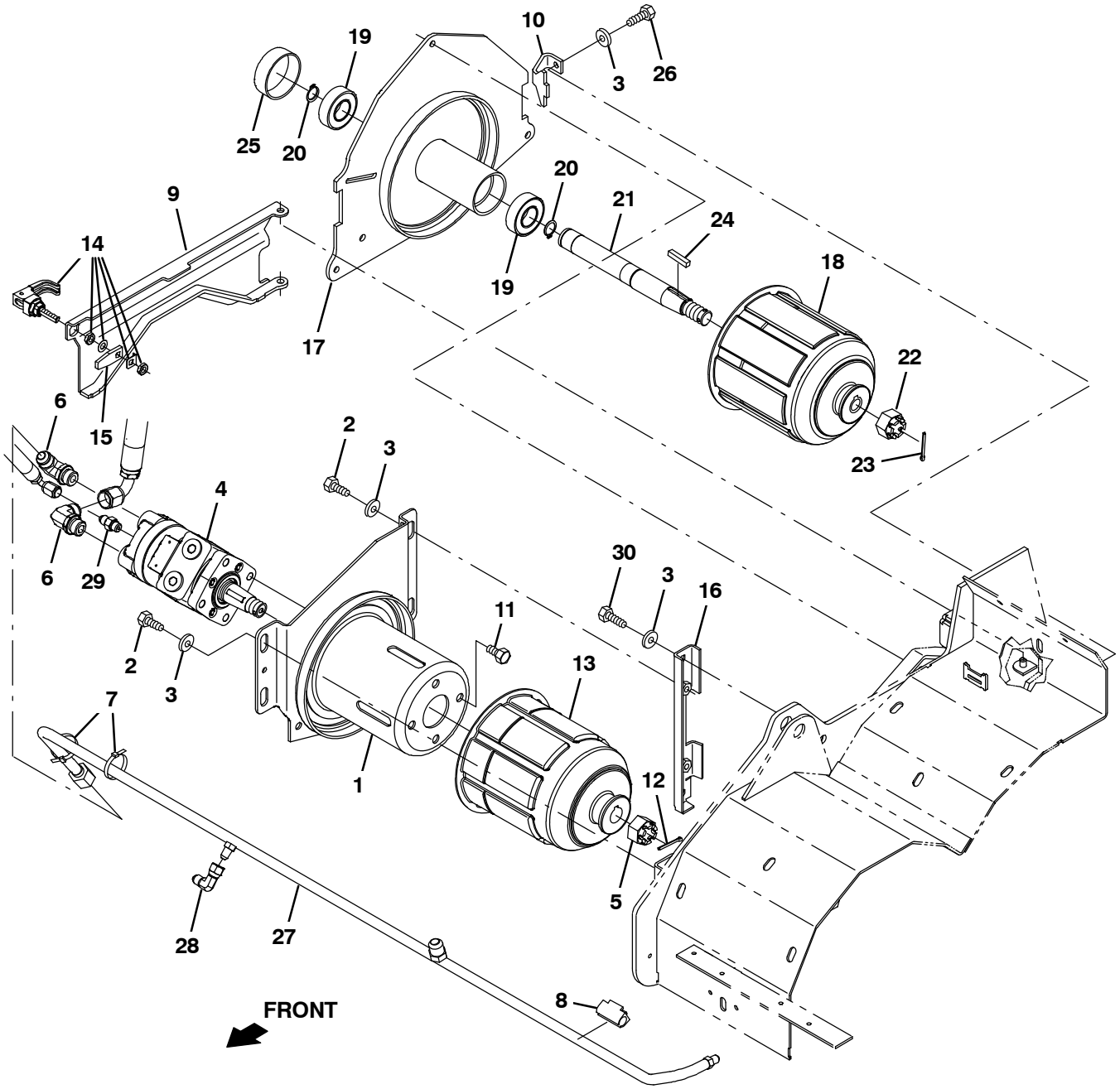

354436 – M20, T20

Fig. 35 – Cylindrical Scrub Brush Drive Group, Right Side

	Ref.	Part No.	Serial Number	Description	Qty.
	1	1021019	(008000–)	Housing Wldt, Brush, Drive	1
	2	15675	(008000–)	Screw, Hex, M8 X 1.25 X 16, Ss	4
	3	32491	(008000–)	Washer, Flat, 0.31, Std	7
▽	4	1068811	(008000–)	Motor, Hyd, Gear, Int 04.5 Bi–Dir 1500	1
▲	5	39527	(008000–)	Nut, Hex, Sltd, .75–16	1
	6	44868	(008000–)	Fitting, Hyd, E90, Jm08/Om08	2
	7	49266	(008000–)	Tie, Cable, Nyl, 07.3l .19w 1.8 Max D	2
	8	1026080	(008000–)	Clamp, Hyd, 0.50d	1
	9	1029964	(008000–)	Door Wldt, Brush	1
	10	1054610	(008000–)	Bracket, Retainer, Rh	1
	11	01762	(008000–)	Screw, Hex, .38–16 X 0.75, Nl	4
	12	08175	(008000–)	Pin, Cotter, .125 X 1.25	1
	13	1057643	(008000–)	Plug Wldt, Drive, Brush, Sweep	1
	14	1065134	(008000–)	Latch, Cmpr, Yel Grip	1
	15	1026352	(008000–)	Pawl, Str	1
	16	1054575	(008000–)	Bracket, Sppt	1
▽		9012832	(008000–)	Idler Door Kit, Replmt [M20/T20/M30/T12]	2
▲	17	1054857	(008000–)	Door Wldt, Brush, Idler	1
▲	18	25686	(008000–)	Plug Wldt, Drive, Brush	1
▲	19	13534	(008000–)	Bearing, Ball, 0.98b 2.05d 0.59w	2
▲	20	09005	(008000–)	Ring, Retaining, Ext, 1.00d, Basic	2
▲	21	56078	(008000–)	Shaft, Brush, Idler	1
▲	22	12295	(008000–)	Nut, Hex, Sltd, M20 X 2.5, 8	1
▲	23	08175	(008000–)	Pin, Cotter, .125 X 1.25	1
▲	24	00927	(008000–)	Key, Sq, 0.25 X 0.25, 1.25l	1
▲	25	1074807	(008000–)	Cap, Vinyl, 57mmid X 23mml	1
	26	09740	(008000–)	Screw, Hex, M8 X 1.25 X 20, Ss	1
	27	1055139	(008000–)	Tube, Hyd, Brush Return, W/ Cd [M20/T20]	1
	28	39210	(008000–)	Fitting, Hyd, E90, Jf04/Jm04	1
	29	55586	(008000–)	Fitting, Hyd, Str, Jm04/Om04	1
	30	09010	(008000–)	Screw, Hex, M8 X 1.25 X 25, Ss	2

Fig. 36 – Cylindrical Scrub Brush Head Lift Group

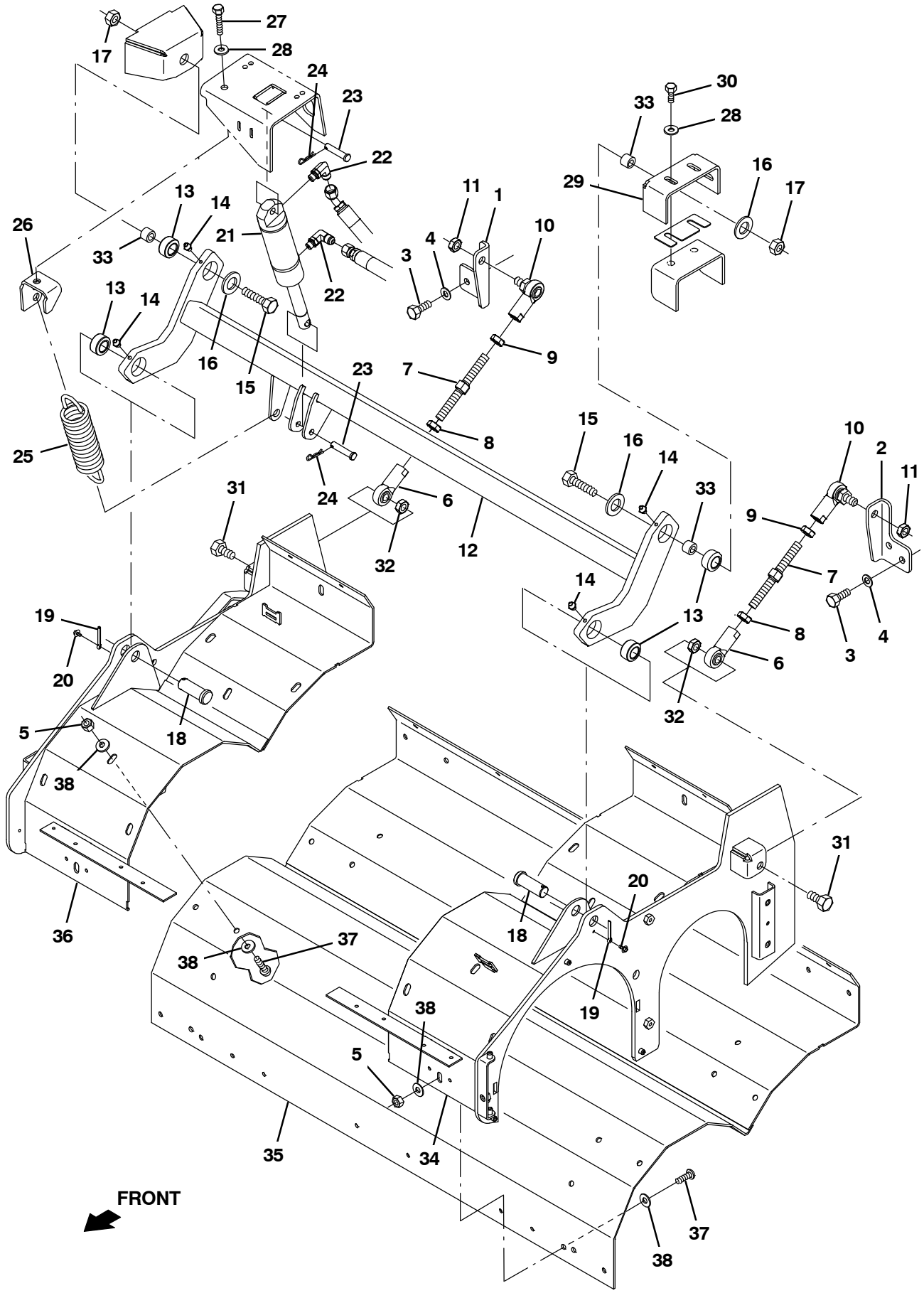

354437 – M20, T20

Fig. 36 – Cylindrical Scrub Brush Head Lift Group

Ref.	Part No.	Serial Number	Description	Qty.
1	1030910	(008000–)	Bracket, Mtg, Scb Head, Rh	1
2	1030911	(008000–)	Bracket, Mtg, Scb Head, Lh	1
3	09028	(008000–)	Screw, Hex, M10 X 1.5 X 25, Ss	4
4	32485	(008000–)	Washer, Flat, 0.38 Sae	4
5	08713	(008000–)	Nut, Hex, Lock, M8 X 1.25, Nl, Ss	10
6	67555	(008000–)	Rod–End, .50–20rh Fem 0.50b	2
7	1014705	(008000–)	Rod, Thrd, 2 End, .50–20 04.9l, Rh / Lh	2
8	48985	(008000–)	Nut, Hex, Jam, .50–20	2
9	71369	(008000–)	Nut, Hex, Jam, .50–20, Lh	2
10	382099	(008000–)	Rod–End, .50–20lh Fem 0.50–20stud	2
11	51824	(008000–)	Nut, Hex, Lock, .50–20, Nl, Thin	2
12	1020003	(008000–)	Tube Wldt, Torque	1
13	42120	(008000–)	Bearing, Self Align, 0.75b 1.25d	4
14	07259	(008000–)	Fitting, Grease, Str Pm04 .47l	4
15	06969	(008000–)	Screw, Hex, M12 X 1.75 X 40, 8.8	2
16	41619	(008000–)	Washer, Flat, 0.56b 1.38d .11, Ss	2
17	09741	(008000–)	Nut, Hex, Lock, M12 X 1.75, Nl, Ss	2
18	04733–12	(008000–)	Pin, Clevis, 0.75d X 2.00l	2
19	08236	(008000–)	Pin, Cotter, .156 X 1.25	2
20	223198	(008000–)	Screw, Hex, M5 X 0.8 X 10, Fmg	2
21	1038137	(008000–)	Cylinder, Hyd, 1.5b 07.8l 02.80strk 2500	1
22	77098	(008000–)	Fitting, Hyd, E90, Jm06/Om04	2
23	17461	(008000–)	Pin, Clevis, 0.37d X 1.75l	2
24	86866	(008000–)	Pin, Cotter, Hair, 0.38d .072 Wir	2
25	1042686	(008000–)	Spring, Extn, 2.00od 0.25wir 07.5l	1
26	1027810	(008000–)	Bracket, Mtg, Spring	1
27	763090	(008000–)	Screw, Hex, M8 X 1.25 X 60, Fl	1
28	32491	(008000–)	Washer, Flat, 0.31, Std	4
29	1019146	(008000–)	Bracket, Mtg, Lift, Scb Head	1
30	09740	(008000–)	Screw, Hex, M8 X 1.25 X 20, Ss	3
31	39811	(008000–)	Screw, Hex, .50–13 X 1.50, 5	2
32	36644	(008000–)	Nut, Hex, Lock, .50–13, Nl, Thin	2
33	1025100	(008000–)	Sleeve, P/M, 0.47b 0.75d 0.5l [430ss]	3
34	1052342	(008000–)	Bracket Wldt, Brush Wrap, Lh	1
35	1069562	(008000–014000)	Plate Wldt, Wrap, Brush	1
35	1077002	(014001–)	Plate Wldt, Wrap, Brush	1
36	1052124	(008000–)	Bracket Wldt, Brush Wrap Mtg, Rh	1
37	223470	(008000–)	Screw, Btn, M8 X 1.25 X 25, Ss	10
38	32491	(008000–)	Washer, Flat, 0.31, Std	20

Fig. 37 - Cylindrical Brush Head Skirt Group

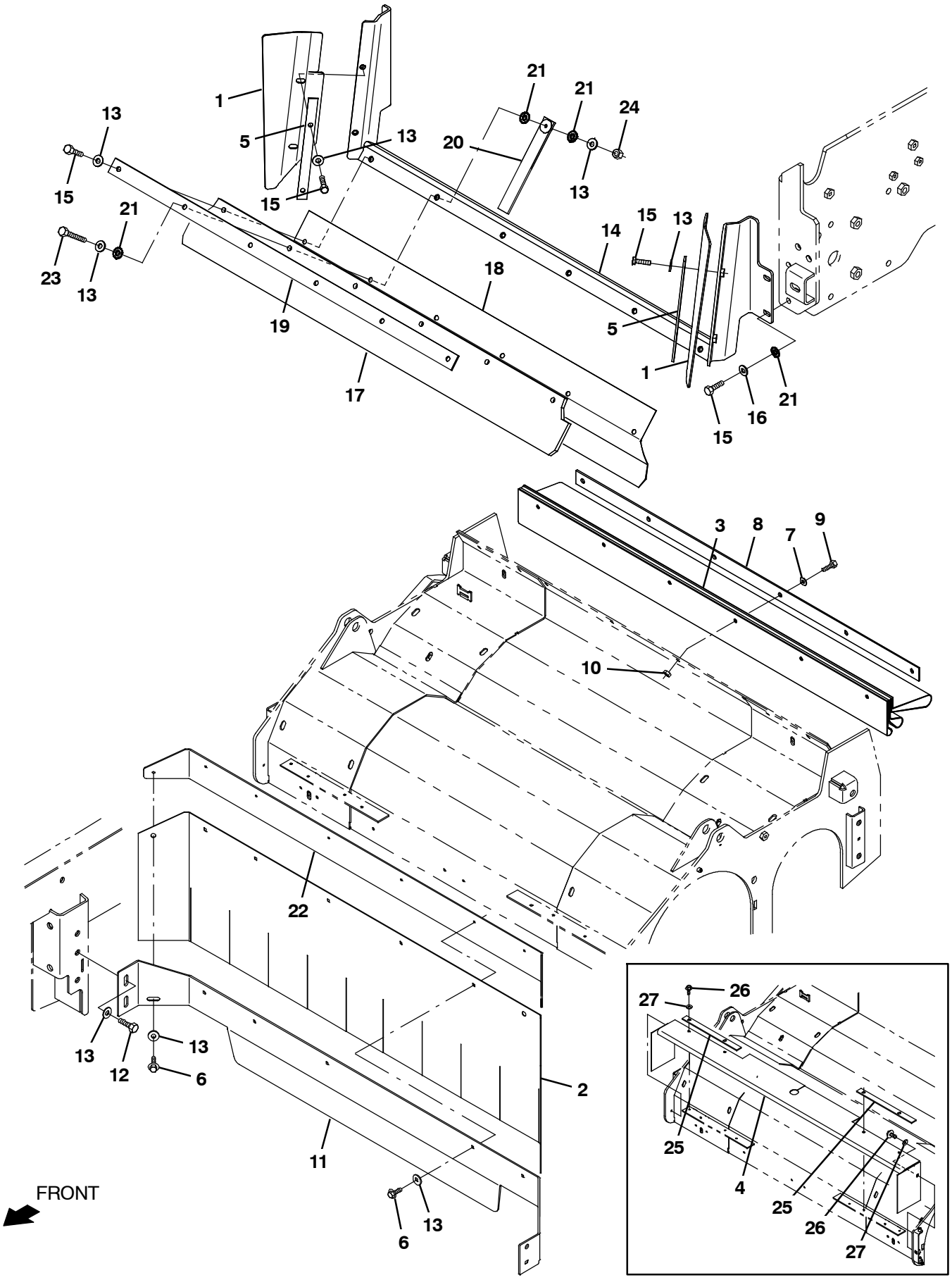

354438 - M20, T20

Fig. 37 - Cylindrical Brush Head Skirt Group

Ref.	Part No.	Serial Number	Description	Qty.
1	1022165	(008000-)	Skirt, Neo, .12, 05.39w 14.01l, 02 Sl	2
2	1020166	(008000-)	Skirt, Neo, .06, 12.00w 45.88l, 07 Hole	1
3	1026108	(008000-)	Skirt, Neo, .06, 26.99w 40.55l, 36 Hole	1
4	1022363	(008000- 014000)	Skirt, Neo, .06, 07.63w 51.52l, 11 Hole	1
5	1022003	(008000-)	Retainer, Skirt	2
6	361339	(008000-)	Screw, Hex, M6 X 1.0 X 16, Fmg	7
7	01684	(008000-)	Washer, Flat, 0.25, Ss	6
8	1020828	(008000-)	Strip, Flap, Recirculation	1
9	07805	(008000-)	Screw, Hex, M6 X 1.0 X 35, Ss	6
10	08712	(008000-)	Nut, Hex, Lock, M6 X 1.0, Ss, Nl	6
11	1039396	(008000-)	Bracket, Mtg, Skirt	1
12	09740	(008000-)	Screw, Hex, M8 X 1.25 X 20, Ss	4
13	01685	(008000-)	Washer, Flat, 0.31, Ss	22
14	1022179	(008000-)	Bracket Wldt, Flap, Recirculation	1
15	09010	(008000-)	Screw, Hex, M8 X 1.25 X 25, Ss	13
16	32491	(008000-)	Washer, Flat, 0.31, Std	4
17	1022007	(008000-)	Skirt, Rbr, .37, 04.50w 40.94l, 06 Hole	1
18	1022009	(008000-)	Skirt, Neo, .06, 06.38w 40.86l, 06 Hole	1
19	1020828	(008000-)	Strip, Flap, Recirculation	1
20	1028852	(008000-)	Strap, Static, Afmkt	1
21	41141	(008000-)	Washer, Lock, Int- Ext, 0.31	7
22	1040018	(008000-)	Plate, Skirt, Front	1
23	33401	(008000-)	Screw, Hex, M8 X 1.25 X 50, Ss, Fl	1
24	08713	(008000-)	Nut, Hex, Lock, M8 X 1.25, Nl, Ss	1
25	1022003	(008000- 014000)	Retainer, Skirt	2
26	361339	(008000- 014000)	Screw, Hex, M6 X 1.0 X 16, Fmg	6
27	01684	(008000- 014000)	Washer, Flat, 0.25, Ss	6

Fig. 38 – Squeegee Lift Group, Rear

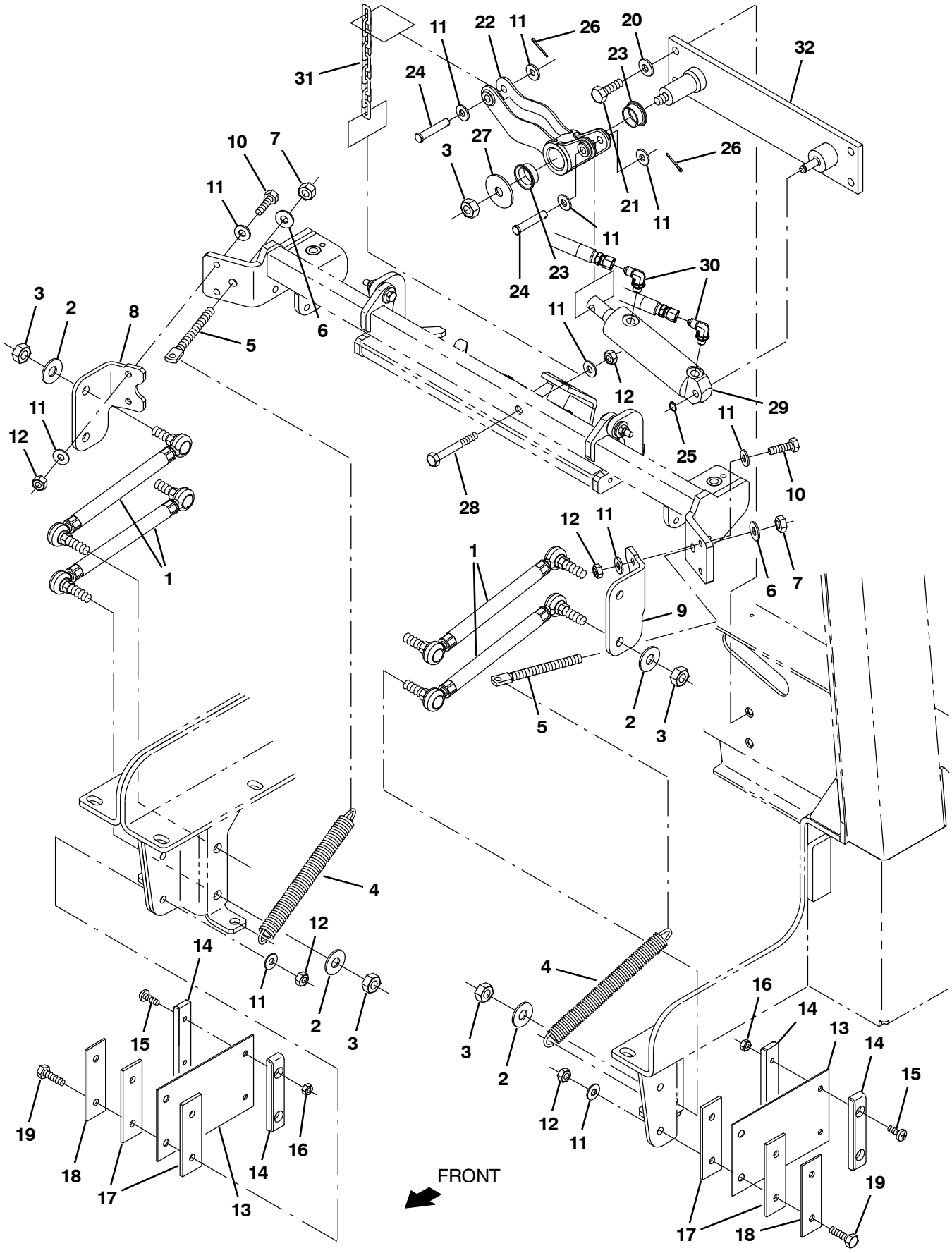

354439 – M20, T20

Fig. 38 – Squeegee Lift Group, Rear

Ref.	Part No.	Serial Number	Description	Qty.
1	1026007	(008000–)	Link Assy, Rod–End, M12	4
2	41619	(008000–)	Washer, Flat, 0.56b 1.38d .11, Ss	8
3	09741	(008000–)	Nut, Hex, Lock, M12 X 1.75, Nl, Ss	9
4	46785–1	(008000–)	Spring, Extn, 0.88od X 0.14wir, 9.0l	2
5	386847	(008000–)	Bolt, Eye, M10 X 1.50 X 064mm, 07.10 Eye	2
6	01686	(008000–)	Washer, Flat, 0.44b 1.00d .08, Ss	2
7	08714	(008000–)	Nut, Hex, Lock, M10 X 1.5, Nl, Ss	2
8	1022372	(008000–)	Angle, Rh	1
9	1022442	(008000–)	Angle, Lh	1
10	09010	(008000–)	Screw, Hex, M8 X 1.25 X 25, Ss	4
11	01685	(008000–)	Washer, Flat, 0.31, Ss	15
12	08713	(008000–)	Nut, Hex, Lock, M8 X 1.25, Nl, Ss	9
13	71204	(008000–)	Spring, Flt, 0.08th, 4.50w X 07.0l	2
14	1024648	(008000–)	Block, Centering	4
15	367770	(008000–)	Screw, Pan, M6 X 1.0 X 16, Ss	4
16	08712	(008000–)	Nut, Hex, Lock, M6 X 1.0, Ss, Nl	4
17	1024641	(008000–)	Spacer, Pad, Rbr	4
18	1024703	(008000–)	Retainer, Spring	2
19	09023	(008000–)	Screw, Hex, M8 X 1.25 X 35, Ss, Fl	4
20	41187	(008000–)	Washer, Flat, Belleville, .38	4
21	12317	(008000–)	Screw, Hex, M10 X 1.5 X 30, Ss	4
22	1025680	(008000–)	Bellcrank, Lift, Sqge	1
23	367313	(008000–)	Bushing, Flng, 1.00b 1.13d 0.50l	2
24	29584	(008000–)	Pin, Clevis, 0.37d X 2.00l	2
25	23524–1	(008000–)	Ring, Retaining, Ext, 0.38d, [Selflock]	1
26	08179	(008000–)	Pin, Cotter, .094 X 1.00	2
27	04414	(008000–)	Washer, Flat, 0.53b 1.88d .12, Stl, Pl	1
28	06957	(008000–)	Screw, Hex, M8 X 1.25 X 60, 8.8	1
29	1038137	(008000–)	Cylinder, Hyd, 1.5b 07.8l 02.80strk 2500	1
30	77097	(008000–)	Fitting, Hyd, E90, Jm04/Om04	2
31	1023779	(008000–)	Chain, Str, 4/0, 08 Link	1
32	1021609	(008000–)	Plate Wldt, Lift, Sqge	1

Fig. 39 – Squeegee Group, Rear

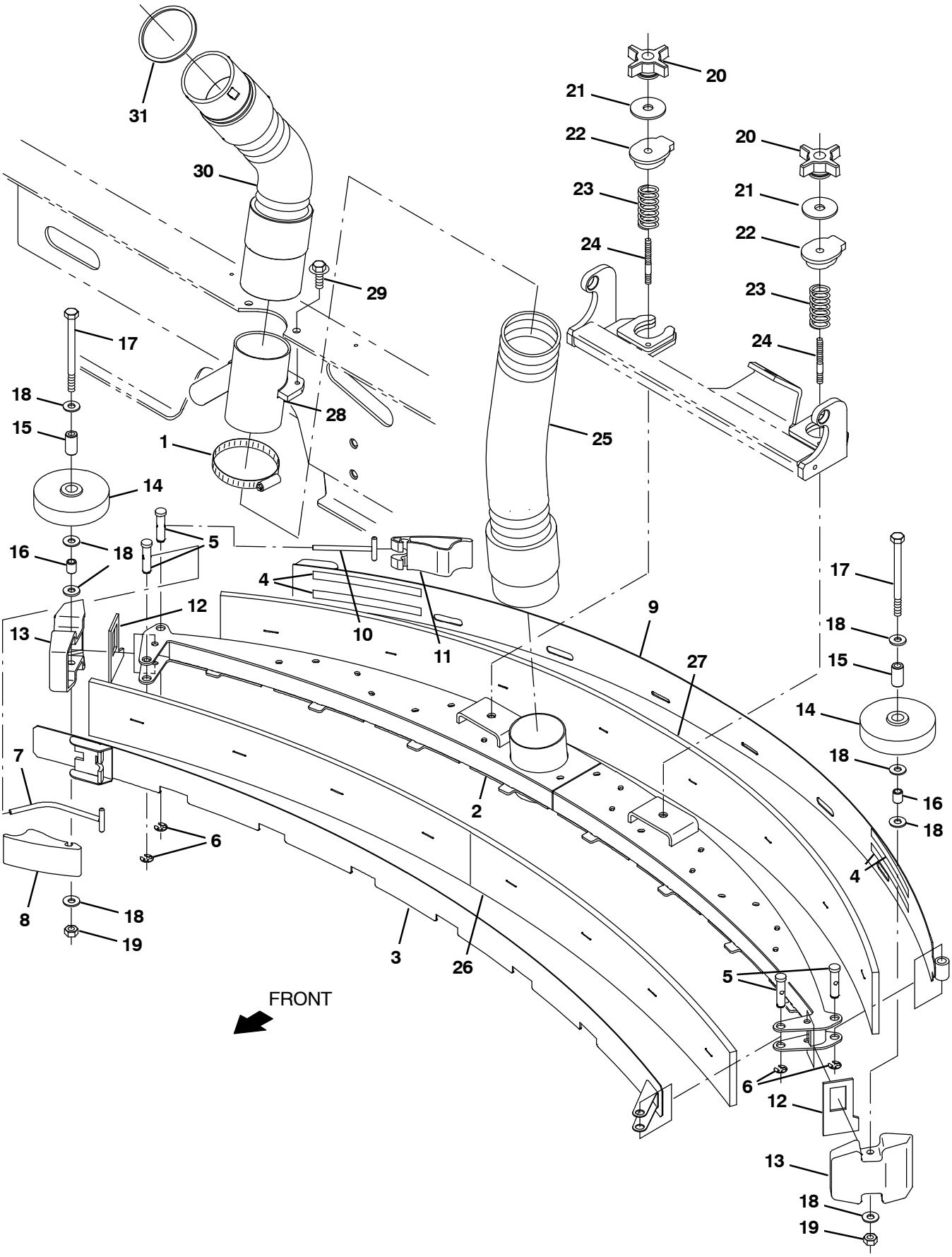

354440 – M20

Fig. 39 – Squeegee Group, Rear

	Ref.	Part No.	Serial Number	Description	Qty.
	1	43555	(008000–)	Clamp, Hose, Wormdrive, 2.50–3.50d, .50w	1
▽		9004493	(008000–)	Squeegee Kit, Rear, Replmt [M20/T20]	1
▲	2	1022831	(008000–)	Squeegee Wldt, Rear	1
▲	3	1023239	(008000–)	Clamp Wldt, Front	1
▲	4	03495	(008000–)	Strip, Non–Slip, 0.50w 06.0l	4
▲	5	21603	(008000–)	Pin, Grvd, 0.43d 01.8l [303ss]	4
▲	6	24555	(008000–)	Ring, Retaining, Ext, 0.38d, [E–Ring]	4
▲	7	386298	(008000–)	Pin Wldt, Front	1
▲	8	1222020	(008000–)	Cam, Front, Yellow	1
▲	9	1028374	(008000–)	Clamp Wldt, Rear	1
▲	10	21606	(008000–)	Bar Wldt, Retainer, Sqge, Rear	1
▲	11	1208906	(008000–)	Cam, Rear, Yellow	1
▲	12	83874	(008000–)	Gasket, Sqge	2
▲	13	386264	(008000–)	Bumper, Sqge	2
▲	14	363162	(008000–)	Wheel, 4.0d 0.89w 0.64b	2
▲	15	363301	(008000–)	Sleeve, P/M, 0.34b 0.63d 1.2l, Bnz	2
▲	16	80395	(008000–)	Sleeve, P/M, 0.31b 0.50d 0.7l [430ss]	2
▲	17	364441	(008000–)	Screw, Hex, M8 X 1.25 X 110, Ss	2
▲	18	01685	(008000–)	Washer, Flat, 0.31, Ss	8
▲	19	08713	(008000–)	Nut, Hex, Lock, M8 X 1.25, Nl, Ss	2
	20	1218322	(008000–)	Knob, Star, 2.75d 4ear, M8x1.25 Fem	2
	21	04414	(008000–)	Washer, Flat, 0.53b 1.88d .12, Stl, Pl	2
	22	387433	(008000–)	Ring, Mtg, Sqge, .50l	2
	23	387500	(008000–)	Spring, Cmpr, 0.9od .042wir 02.0l	2
	24	1226700	(008000–)	Stud, M8 X 1.25, 2.75l M8 X 1.25, Ss	2
	25	1021511	(008000–010516)	Hose, Vacuum, 3.00id X 019.0l, 1cuff	1
	25	1234534	(010517–)	Hose, Vacuum, 3.00id X 019.0l, 1cuff	1
	26	1017868	(008000–)	Blade, Sqge, Front, 49.58l [Linard]	1
	26	1027719	(008000–)	Blade, Sqge, Front, 49.58l Ure (Option)	1
	27	1031331	(008000–)	Blade, Sqge, Rear, Linatex	1
	27	1031945	(008000–)	Blade, Sqge, Rear, 53.78l Ure (Option)	1
	28	1036240	(008000–)	Tube, Vacuum	1
	29	1037346	(008000–)	Screw, Hex, M8 X 1.25 X 25, 9.8, Sems	2
	30	1031610	(008000–)	Hose Assy, Sqge	1
	31	1021920	(008000–)	Gasket, 3.23id 3.63od .16th, Ure	1

Fig. 40 – Squeegee Linkage Group, Rear

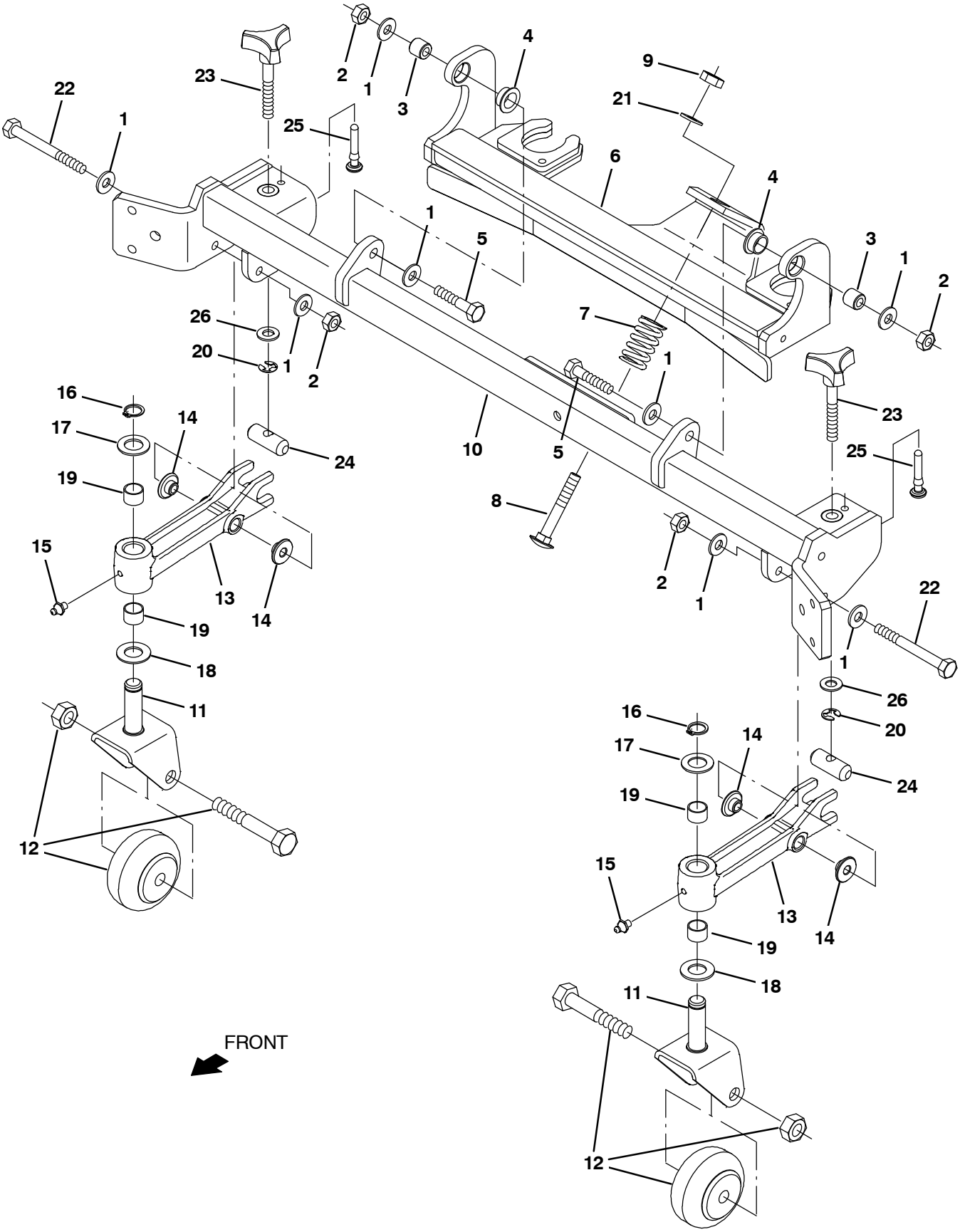

354441 – M20

Fig. 40 – Squeegee Linkage Group, Rear

	Ref.	Part No.	Serial Number	Description	Qty.
	1	01685	(008000–)	Washer, Flat, 0.31, Ss	8
	2	08713	(008000–)	Nut, Hex, Lock, M8 X 1.25, Nl, Ss	4
	3	80409	(008000–)	Sleeve, P/M, 0.34b 0.63d 0.6l, Bnz	2
	4	25735	(008000–)	Bushing, Flng, 0.63b 0.75d 0.38l	2
	5	222505	(008000–)	Screw, Hex, M8 X 1.25 X 45, Ss	2
	6	1023476	(008000–)	Bracket Wldt, Mtg, Sqge	1
	7	65180	(008000–)	Spring, Dsl, 1.00od 0.50id 1.7l	1
	8	1025601	(008000–)	Bolt, Carriage, M10 X 1.5 X 70	1
	9	08714	(008000–)	Nut, Hex, Lock, M10 X 1.5, Nl, Ss	1
	10	1034149	(008000–)	Crossmember Wldt [M20]	1
▽		9017944	(008000–)	Caster Assy, F/ Sqge, Replmt[M20/T20]	2
▲	11	1021404	(008000–)	Bracket Wldt, Mtg, Caster	1
▲	12	9014285	(008000–)	Caster Kit, Rear Squeegee, Am	1
▲	13	1025460	(008000–)	Caster, Pivot	1
▲	14	80950	(008000–)	Bushing, Flng, 0.32b 0.50d 0.24l, Bnz	2
▲	15	07259	(008000–)	Fitting, Grease, Str Pm04 .47l	1
▲	16	33373	(008000–)	Ring, Retaining, Ext, 0.62d, Hd	1
▲	17	63468	(008000–)	Washer, Flat, 0.69b 1.19d .06, Stl, Pl	1
▲	18	64425	(008000–)	Washer, Thrust, 0.61b 1.25d .06, Fgl	1
▲	19	07449	(008000–)	Bushing, Sleeve, 0.62b 0.72d 0.50l, Fgl	2
	20	24555	(008000–)	Ring, Retaining, Ext, 0.38d, [E–Ring]	2
	21	1014563	(008000–)	Washer, Flat, 0.40b 1.12d .12, Ss	1
	22	39281	(008000–)	Screw, Hex, M8 X 1.25 X 90, 8.8	2
	23	1222043	(008000–)	Knob Assy, Star, 1.12d 3ear M10, Yellow	2
	24	1021497	(008000–)	Pin, 0.63d 01.8l, 1/M10h, 2cham	2
	25	1035727	(002050–)	Stop, Rotation	2
	26	32485	(008000–)	Washer, Flat, 0.38 Sae	2

Fig. 41 – Squeegee Group, Right Side

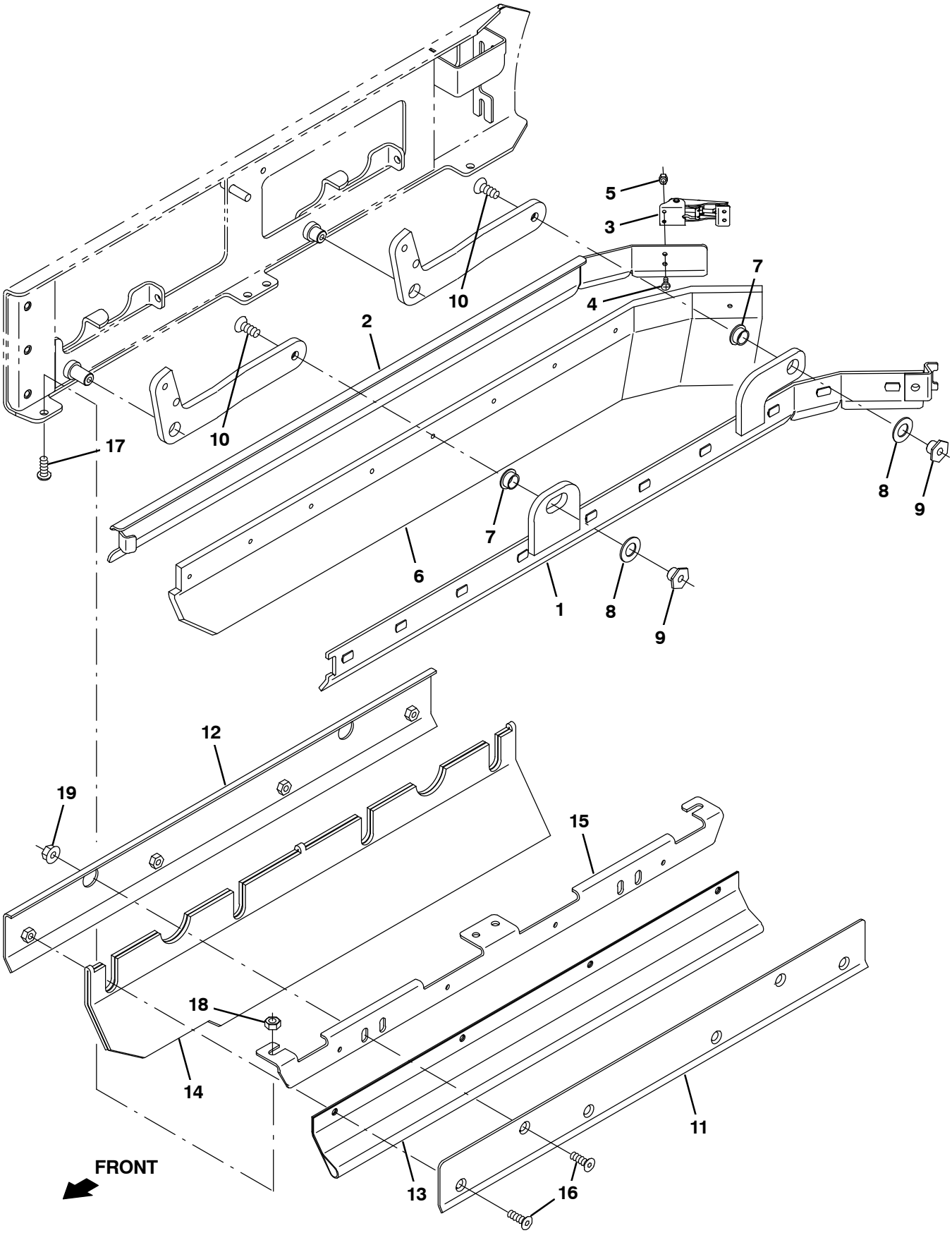

354442 – M20, M30

Fig. 41 – Squeegee Group, Right Side

Ref.	Part No.	Serial Number	Description	Qty.
1	1029132	(008000–)	Frame Wldt, Sqge, Rh	1
2	1029128	(008000–)	Retainer, Sqge, Side, Rh	1
3	1222018	(008000–)	Latch, Door, Yellow	1
4	49697	(008000–)	Screw, Pan, M4 X 0.7 X 10, Ss	2
5	33932	(008000–)	Nut, Hex, Lock, M4 X 0.7, Nl, Ss	2
6	1031011	(008000–)	Blade, Sqge, .38 3.55w 038.3l, Linatex	1
6	1031823	(008000–)	Blade, Sqge, .38 3.55w 038.3l, Ure (Option)	1
7	25735	(008000–)	Bushing, Flng, 0.63b 0.75d 0.38l	2
8	64425	(008000–)	Washer, Thrust, 0.61b 1.25d .06, Fgl	2
9	1022846	(008000–)	Nut, T, M10 X 1.50 X 15.8od X 13.0l	2
10	09081	(008000–)	Screw, Flt, M10 X 1.5 X 25, 10.9	2
11	1024584	(008000–)	Bracket, Mtg, Skirt, Brush Door	1
12	1024651	(008000–)	Bracket, Mtg, Skirt, Door	1
13	1024586	(008000–)	Skirt, Neo, .06, 06.85w 27.95l, 08 Hole	1
14	1019295	(008000–)	Skirt, Neo, .18, 10.37w 27.95l, 12 H&S	1
15	1025151	(008000–)	Bracket, Mtg, Skirt, Door, Brush	1
16	222463	(008000–)	Screw, Flt, M8 X 1.25 X 20, Blk	6
17	393135	(008000–)	Screw, Btn, M8 X 1.25 X 20, Blk	4
18	08713	(008000–)	Nut, Hex, Lock, M8 X 1.25, Nl, Ss	4
19	07791	(008000–)	Nut, Hex, Flng, M8 X 1.25	2

Fig. 42 – Squeegee Lift Group, Right Side

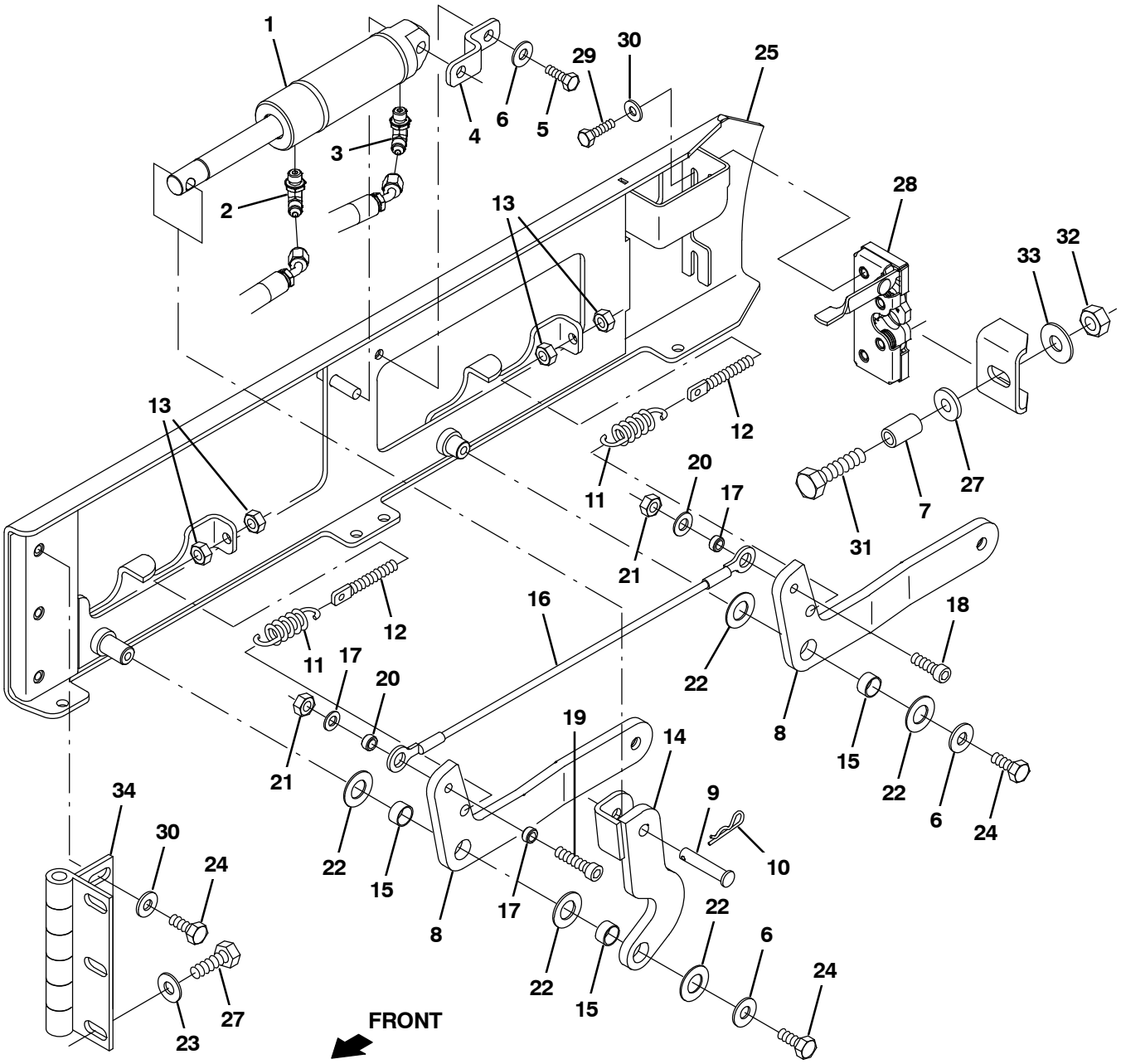

354443

Fig. 42 – Squeegee Lift Group, Right Side

Ref.	Part No.	Serial Number	Description	Qty.
1	1038137	(008000–)	Cylinder, Hyd, 1.5b 07.8l 02.80strk 2500	1
2	77097	(008000–)	Fitting, Hyd, E90, Jm04/Om04	1
3	1028635	(008000–)	Fitting, Hyd, Rst, Spcl	1
4	1022825	(008000–)	Bracket, Mtg, Cyl	1
5	08716	(008000–)	Screw, Hex, M6 X 1.00 X 20, Ss	1
6	01685	(008000–)	Washer, Flat, 0.31, Ss	3
7	1039348	(008000–)	Sleeve, 0.49b 0.68d 1.2l [304ss]	1
8	1020548	(008000–)	Arm, Sqge, Side, Rh	2
9	17461	(008000–)	Pin, Clevis, 0.37D X 1.75L	1
10	08182	(008000–)	Pin, Cotter, .125 X 1.00	1
11	87816	(008000–)	Spring, Extn, 0.75od X 0.09wir, 2.5l	2
12	386088	(008000–)	Bolt, Eye, M08 X 1.25 X 070mm, 05.50 Eye	2
13	07786	(008000–)	Nut, Hex, Std, M8 X 1.25, Ss	4
14	1023306	(008000–)	Arm Wldt, Sqge, Lift, Rh	1
15	71607	(008000–)	Bushing, Sleeve, 0.63b 0.72d 0.38l	3
16	81784	(008000–)	Cable, Glv .13d 015.8l .50eye /.50eye	1
17	360801	(008000–)	Sleeve, 0.31b 0.50d 0.3l, Ss	3
18	39308	(008000–)	Screw, Soc, M8 X 1.25 X 25, 12.9	1
19	41445	(008000–)	Screw, Soc, M8 X 1.25 X 35, 12.9	1
20	39349	(008000–)	Washer, Flat, 0.31 Sae	2
21	08709	(008000–)	Nut, Hex, Lock, M8 X 1.25, Nl	2
22	64425	(008000–)	Washer, Thrust, 0.61b 1.25d .06, Fgl	5
23	41187	(008000–)	Washer, Flat, Belleville, .38	3
24	09740	(008000–)	Screw, Hex, M8 X 1.25 X 20, Ss	5
25	1019031	(008000–)	Door Wldt, Brush, Rh	1
26	09028	(008000–)	Screw, Hex, M10 X 1.5 X 25, Ss	3
27	36328	(008000–)	Washer, Flat, Belleville, .50	1
28	1222036	(008000–)	Latch, Hook, Yellow	1
29	09007	(008000–)	Screw, Hex, M6 X 1.0 X 25, Ss	2
30	41185	(008000–)	Washer, Flat, Belleville, .25	5
31	379870	(008000–)	Screw, Hex, M12 X 1.75 X 55, Ss	1
32	07788	(008000–)	Nut, Hex, Std, M12 X 1.75, Ss	1
33	41619	(008000–)	Washer, Flat, 0.56b 1.38d .11, Ss	1
34	1024576	(008000–)	Hinge, .50pin .19 4.0w 06.0l 3/0.44sl	1

Fig. 43 – Squeegee Group, Left Side

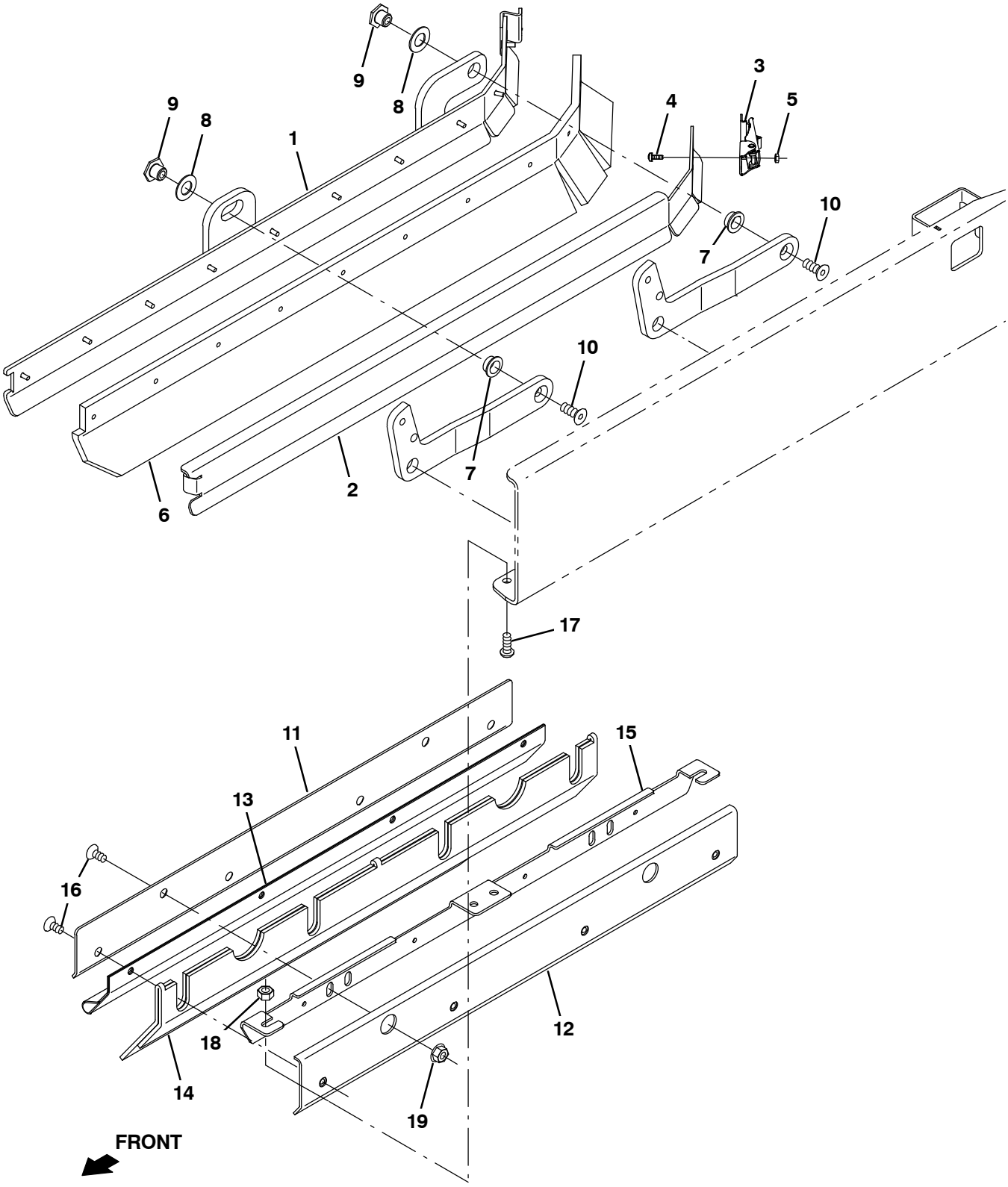

354444 – M20, M30

Fig. 43 – Squeegee Group, Left Side

Ref.	Part No.	Serial Number	Description	Qty.
1	1028972	(008000–)	Frame Wldt, Sqge, Lh	1
2	1028979	(008000–)	Retainer, Sqge, Side, Lh	1
3	1222018	(008000–)	Latch, Door, Yellow	1
4	49697	(008000–)	Screw, Pan, M4 X 0.7 X 10, Ss	2
5	33932	(008000–)	Nut, Hex, Lock, M4 X 0.7, Nl, Ss	2
6	1031011	(008000–)	Blade, Sqge, .38 3.55w 038.3l, Linatex	1
6	1031823	(008000–)	Blade, Sqge, .38 3.55w 038.3l, Ure (Option)	1
7	25735	(008000–)	Bushing, Flng, 0.63b 0.75d 0.38l	2
8	64425	(008000–)	Washer, Thrust, 0.61b 1.25d .06, Fgl	2
9	1022846	(008000–)	Nut, T, M10 X 1.50 X 15.8od X 13.0l	2
10	09081	(008000–)	Screw, Flt, M10 X 1.5 X 25, 10.9	2
11	1024584	(008000–)	Bracket, Mtg, Skirt, Brush Door	1
12	1024651	(008000–)	Bracket, Mtg, Skirt, Door	1
13	1024586	(008000–)	Skirt, Neo, .06, 06.85w 27.95l, 08 Hole	1
14	1019295	(008000–)	Skirt, Neo, .18, 10.37w 27.95l, 12 H&S	1
15	1025151	(008000–)	Bracket, Mtg, Skirt, Door, Brush	1
16	222463	(008000–)	Screw, Flt, M8 X 1.25 X 20, Blk	6
17	393135	(008000–)	Screw, Btn, M8 X 1.25 X 20, Blk	4
18	08713	(008000–)	Nut, Hex, Lock, M8 X 1.25, Nl, Ss	4
19	07791	(008000–)	Nut, Hex, Flng, M8 X 1.25	2

Fig. 44 – Squeegee Lift Group, Left Side

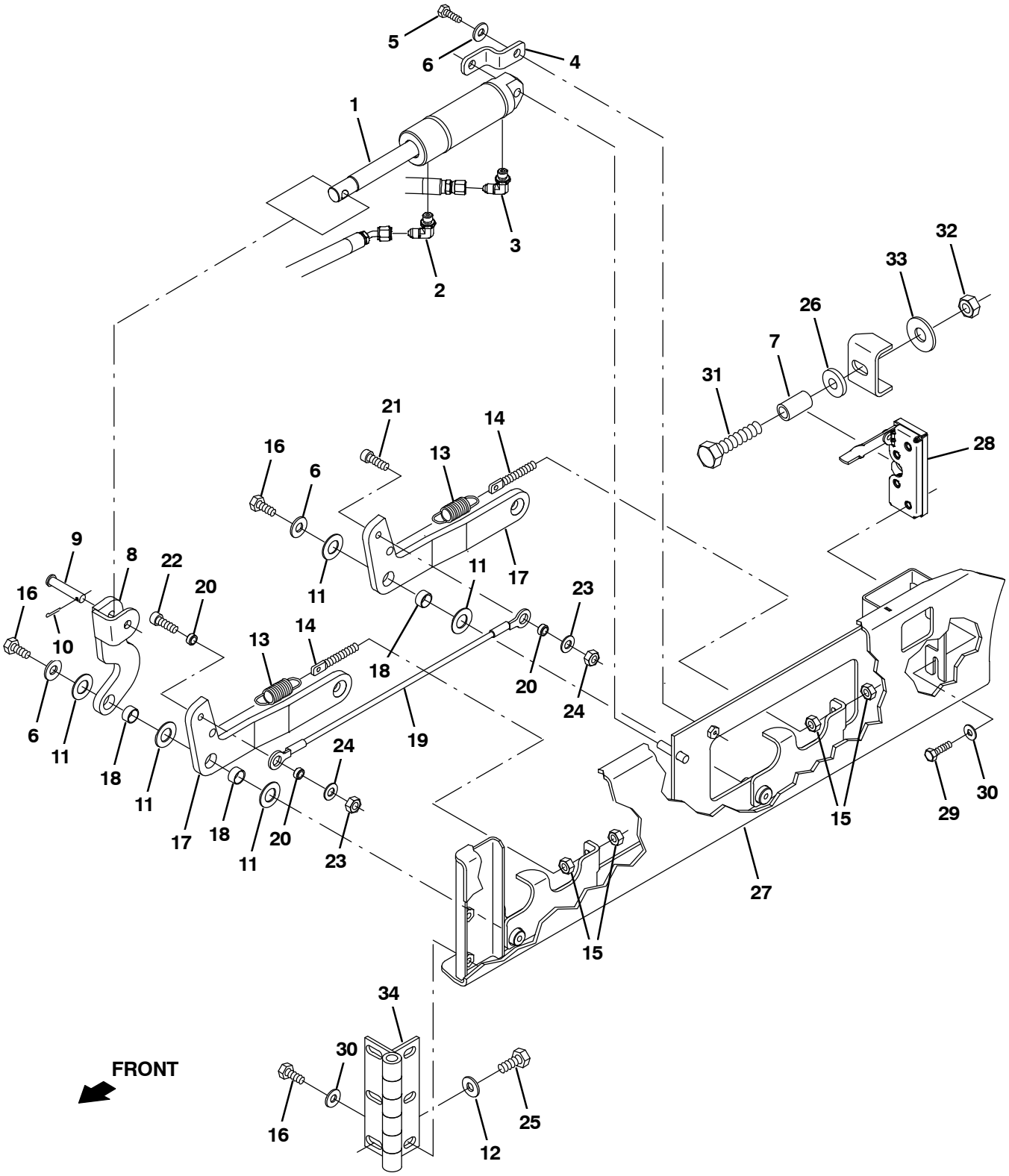

354445

Fig. 44 – Squeegee Lift Group, Left Side

Ref.	Part No.	Serial Number	Description	Qty.
1	1038137	(008000–)	Cylinder, Hyd, 1.5b 07.8l 02.80strk 2500	1
2	77097	(008000–)	Fitting, Hyd, E90, Jm04/Om04	1
3	1028635	(008000–)	Fitting, Hyd, Rst, Spcl	1
4	1022825	(008000–)	Bracket, Mtg, Cyl	1
5	08716	(008000–)	Screw, Hex, M6 X 1.00 X 20, Ss	1
6	01685	(008000–)	Washer, Flat, 0.31, Ss	3
7	1039348	(008000–)	Sleeve, 0.49b 0.68d 1.2l [304ss]	1
8	1022978	(008000–)	Arm Wldt, Lift, Sqge, Lh	1
9	17461	(008000–)	Pin, Clevis, 0.37D X 1.75L	1
10	08182	(008000–)	Pin, Cotter, .125 X 1.00	1
11	64425	(008000–)	Washer, Thrust, 0.61b 1.25d .06, Fgl	5
12	41187	(008000–)	Washer, Flat, Belleville, .38	3
13	87816	(008000–)	Spring, Extn, 0.75od X 0.09wir, 2.5l	2
14	386088	(008000–)	Bolt, Eye, M08 X 1.25 X 070mm, 05.50 Eye	2
15	07786	(008000–)	Nut, Hex, Std, M8 X 1.25, Ss	4
16	09740	(008000–)	Screw, Hex, M8 X 1.25 X 20, Ss	5
17	1023307	(008000–)	Arm, Sqge, Side, Lh	2
18	71607	(008000–)	Bushing, Sleeve, 0.63b 0.72d 0.38l	3
19	81784	(008000–)	Cable, Glv .13d 015.8l .50eye /.50eye	1
20	360801	(008000–)	Sleeve, 0.31b 0.50d 0.3l, Ss	3
21	39308	(008000–)	Screw, Soc, M8 X 1.25 X 25, 12.9	1
22	41445	(008000–)	Screw, Soc, M8 X 1.25 X 35, 12.9	1
23	39349	(008000–)	Washer, Flat, 0.31 Sae	2
24	08709	(008000–)	Nut, Hex, Lock, M8 X 1.25, Nl	2
25	09028	(008000–)	Screw, Hex, M10 X 1.5 X 25, Ss	3
26	36328	(008000–)	Washer, Flat, Belleville, .50	1
27	1023314	(008000–)	Door Wldt, Brush, Lh	1
28	1222038	(008000–)	Latch, Hook, Yellow	1
29	09007	(008000–)	Screw, Hex, M6 X 1.0 X 25, Ss	2
30	41185	(008000–)	Washer, Flat, Belleville, .25	5
31	379870	(008000–)	Screw, Hex, M12 X 1.75 X 55, Ss	1
32	07788	(008000–)	Nut, Hex, Std, M12 X 1.75, Ss	1
33	41619	(008000–)	Washer, Flat, 0.56b 1.38d .11, Ss	1
34	1024576	(008000–)	Hinge, .50pin .19 4.0w 06.0l 3/0.44sl	1

Fig. 45 – Solution Tank Group

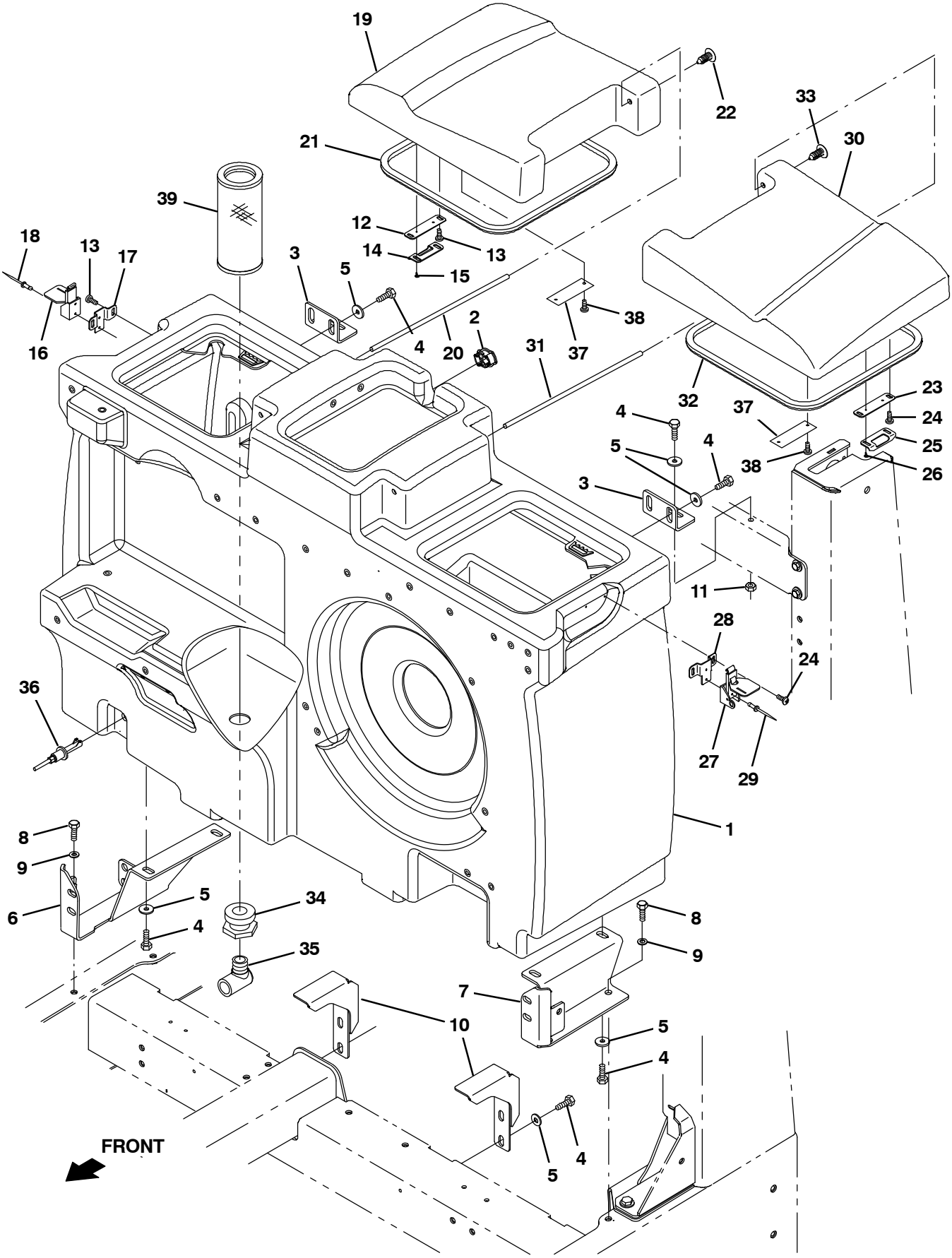

354446 – M20

Fig. 45 – Solution Tank Group

	Ref.	Part No.	Serial Number	Description	Qty.
	1	1027381	(008000–)	Tank, Soltn, W/ Label [M20]	1
	2	390994	(008000–)	Plug, Hole, Soltn Tank, Blk Pyu	1
	3	1020209	(008000–)	Angle, Sppt, Tank, Rear	2
	4	09740	(008000–)	Screw, Hex, M8 X 1.25 X 20, Ss	12
	5	1017218	(008000–)	Washer, Flat, 0.32b 1.00d .12, Ss	12
	6	1040306	(008000–)	Bracket Wldt, Tank, Soltn, Rh	1
	7	1024591	(008000–)	Bracket, Tank, Soltn, Lh	1
	8	09010	(008000–)	Screw, Hex, M8 X 1.25 X 25, Ss	4
	9	39349	(008000–)	Washer, Flat, 0.31 Sae	4
	10	1024389	(008000–)	Bracket, Soltn, Tank, Cntr	2
	11	08713	(008000–)	Nut, Hex, Lock, M8 X 1.25, Nl, Ss	2
▽		9003069	(008000–)	Cover Kit, Soltn Tank, Rh [M20 & T20]	1
▲▽		9005165	(008000–)	Latch Kit, Cover, Soltn, Replmt[M20/T20]	1
▲▲	12	1039757	(008000–)	Plate, Mtg, Latch	1
▲▲	13	382320	(008000–)	Screw, Pan, Phl, 12–16 X 0.50, F/ Plstc	4
▲▲	14	1048474	(008000–)	Catch, Latch, Tank Cover	1
▲▲	15	222267	(008000–)	Screw, Pan, Phl, 06–20 X 0.50, Fmg/Ab	2
▲▲	16	367949	(008000–)	Latch	1
▲▲	17	1048512	(008000–)	Bracket, Mtg, Latch, Tank Cover	1
▲▲	18	08875	(008000–)	Rivet, Blind, .125d X 0.54 X .25d, Alm	2
▲	19	1022176	(008000–)	Cover, Tank, Soltn, Rh, Trimmed	1
▲	20	1047098	(008000–)	Bar, Rnd, Plstc, 0.31d 12.5l	1
▲	21	1038805	(008000–)	Seal, Bulb, Str, .50Hi .50W 047.2L, Adh	1
▲	22	1068277	(008000–)	Plug, Hole, Rnd, 0.38 H 1.0l, Brb, Nyl	1
▽		9003071	(008000–)	Cover Kit, Tank, Soltn, Rh, Replmt, Ce (Japan and Europe Only)	1
▲▽		9005165	(008000–)	Latch Kit, Cover, Soltn, Replmt[M20/T20]	1
▲▲	12	1039757	(008000–)	Plate, Mtg, Latch	1
▲▲	13	382320	(008000–)	Screw, Pan, Phl, 12–16 X 0.50, F/ Plstc	4
▲▲	14	1048474	(008000–)	Catch, Latch, Tank Cover	1
▲▲	15	222267	(008000–)	Screw, Pan, Phl, 06–20 X 0.50, Fmg/Ab	2
▲▲	16	367949	(008000–)	Latch	1
▲▲	17	1048512	(008000–)	Bracket, Mtg, Latch, Tank Cover	1
▲▲	18	08875	(008000–)	Rivet, Blind, .125d X 0.54 X .25d, Alm	2
▲	19	1031233	(008000–)	Cover, Tank, Soltn, Rh, Trimmed, Ce (Japan and Europe Only)	1
▲	20	1047098	(008000–)	Bar, Rnd, Plstc, 0.31d 12.5l	1
▲	21	1038805	(008000–)	Seal, Bulb, Str, .50Hi .50W 047.2L, Adh	1
▲	22	1068277	(008000–)	Plug, Hole, Rnd, 0.38 H 1.0l, Brb, Nyl	1

(CONTINUED)

Fig. 45 – Solution Tank Group

	Ref.	Part No.	Serial Number	Description	Qty.
▽		9003068	(008000–)	Cover Kit, Tank, Soltn, Lh, Replmt	1
▲▽		9005165	(008000–)	Latch Kit, Cover, Soltn, Replmt[M20/T20]	1
▲▲	23	1039757	(008000–)	Plate, Mtg, Latch	1
▲▲	24	382320	(008000–)	Screw, Pan, Phl, 12–16 X 0.50, F/ Plstc	4
▲▲	25	1048474	(008000–)	Catch, Latch, Tank Cover	1
▲▲	26	222267	(008000–)	Screw, Pan, Phl, 06–20 X 0.50, Fmg/Ab	2
▲▲	27	367949	(008000–)	Latch	1
▲▲	28	1048512	(008000–)	Bracket, Mtg, Latch, Tank Cover	1
▲▲	29	08875	(008000–)	Rivet, Blind, .125d X 0.54 X .25d, Alm	2
▲	30	1022182	(008000–)	Cover, Tank, Soltn, Lh, Trimmed	1
▲	31	1047098	(008000–)	Bar, Rnd, Plstc, 0.31d 12.5l	1
▲	32	1038805	(008000–)	Seal, Bulb, Str, .50Hi .50W 047.2L, Adh	1
▲	33	1068277	(008000–)	Plug, Hole, Rnd, 0.38 H 1.0l, Brb, Nyl	1
▽		9003070	(008000–)	Cover Kit, Tank, Soltn, Lh, Replmt, Ce (Japan and Europe Only)	1
▲▽		9005165	(008000–)	Latch Kit, Cover, Soltn, Replmt[M20/T20]	1
▲▲	23	1039757	(008000–)	Plate, Mtg, Latch	1
▲▲	24	382320	(008000–)	Screw, Pan, Phl, 12–16 X 0.50, F/ Plstc	4
▲▲	25	1048474	(008000–)	Catch, Latch, Tank Cover	1
▲▲	26	222267	(008000–)	Screw, Pan, Phl, 06–20 X 0.50, Fmg/Ab	2
▲▲	27	367949	(008000–)	Latch	1
▲▲	28	1048512	(008000–)	Bracket, Mtg, Latch, Tank Cover	1
▲▲	29	08875	(008000–)	Rivet, Blind, .125d X 0.54 X .25d, Alm	2
▲	30	1031235	(008000–)	Cover, Tank, Soltn, Lh, Trimmed, Ce (Japan and Europe Only)	1
▲	31	1047098	(008000–)	Bar, Rnd, Plstc, 0.31d 12.5l	1
▲	32	1038805	(008000–)	Seal, Bulb, Str, .50Hi .50W 047.2L, Adh	1
▲	33	1068277	(008000–)	Plug, Hole, Rnd, 0.38 H 1.0l, Brb, Nyl	1
	34	377349	(008000–)	Fitting, Plstc, Pf12/Pf12, Bh	1
	35	69785	(008000–)	Fitting, Plstc, E90, Pf12/Pm12	1
	36	385685	(008000–)	Sensor, Level, Liq, 14vdc 01a .62–11	1
	37	1017101	(008000–)	Plate, Label, Soltn Tank (ec–H20 only)	2
	38	360973	(008000–)	Screw, Pan, 12–16 X 0.50, F/ Plstc (ec–H20 Only)	4
	39	1027290	(008000–014000)	Filter, Soltn, 20mesh, Pm12 3.1d 02.6l	1
	39	1057465	(014001–)	Filter, Soltn, 080Mesh, Pm12 3.2D 08.0L	1

Fig. 46 – Solution Tank Drain Group

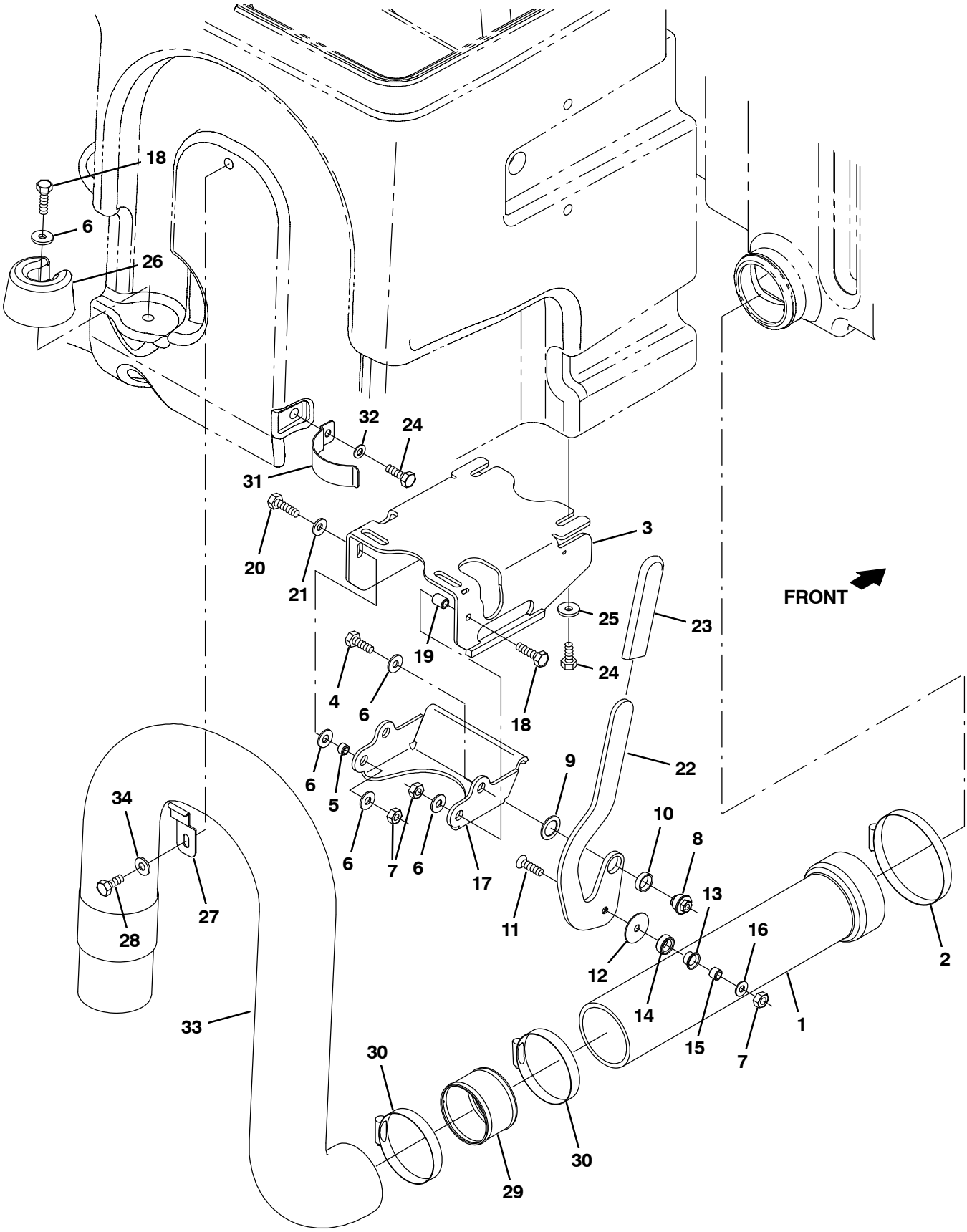

354447

Fig. 46 – Solution Tank Drain Group

Ref.	Part No.	Serial Number	Description	Qty.
1	9003793	(008000–)	Tube Kit, Tank, Soltn, Replmt	1
2	23498	(008000–)	Clamp, Hose, Wormdrive, 3.56–4.50d, .50w	1
3	1042003	(008000–)	Mount Wldt, Valve, Pinch, Rh	1
4	39277	(008000–)	Screw, Hex, M8 X 1.25 X 25, 8.8	1
5	222516	(008000–)	Sleeve, P/M, 0.31b 0.50d 0.3l [430ss]	1
6	32491	(008000–)	Washer, Flat, 0.31, Std	5
7	08713	(008000–)	Nut, Hex, Lock, M8 X 1.25, Nl, Ss	3
8	1024599	(008000–)	Bushing, Eccentric, Adj	1
9	1026051	(008000–)	Washer, Flat, 0.79b 1.18d .06, Nyl	1
10	74090	(008000–)	Bushing, Sleeve, 0.75b 0.88d 0.25l	1
11	79506	(008000–)	Screw, Flt, M8 X 1.25 X 30, Ss	1
12	1028701	(008000–)	Washer, Thrust, 0.34b 1.50d .06	1
13	15648	(008000–)	Bushing, Flng, 0.50b 0.59d 0.38l	1
14	1028691	(008000–)	Roller, Brg	1
15	1028690	(008000–)	Tube, 0.50d 0.32b 00.4l, Ss	1
16	1017218	(008000–)	Washer, Flat, 0.32b 1.00d .12, Ss	1
17	1024535	(008000–)	Arm, Pinch	1
18	06955	(008000–)	Screw, Hex, M8 X 1.25 X 35, 8.8	2
19	80395	(008000–)	Sleeve, P/M, 0.31b 0.50d 0.7l [430ss]	1
20	76570	(008000–)	Screw, Hex, M8 X 1.25 X 30, 8.8	1
21	41186	(008000–)	Washer, Flat, Belleville, .31	1
22	1026727	(008000–)	Handle, Valve, Pinch, Rh	1
23	1023502	(008000–)	Grip, Handle	1
24	09740	(008000–)	Screw, Hex, M8 X 1.25 X 20, Ss	5
25	1017218	(008000–)	Washer, Flat, 0.32b 1.00d .12, Ss	4
26	1022137	(008000–)	Plug, Hose, Pyu	1
27	1025480	(008000–)	Bracket, Retaining, Hose	1
28	15675	(008000–)	Screw, Hex, M8 X 1.25 X 16, Ss	1
29	1041953	(008000–)	Tube, 2.90id 3.00od 02.4l, Ss	2
30	43555	(008000–)	Clamp, Hose, Wormdrive, 2.50–3.50d, .50w	2
31	1024558	(008000–)	Strap, Retaining, Hose	1
32	39349	(008000–)	Washer, Flat, 0.31 Sae	1
33	1019424	(008000–)	Hose, Drain, 3.00id X 48.0l	1
34	01685	(008000–)	Washer, Flat, 0.31, Ss	2

Fig. 47 – Solution Control Group (008000–014000)

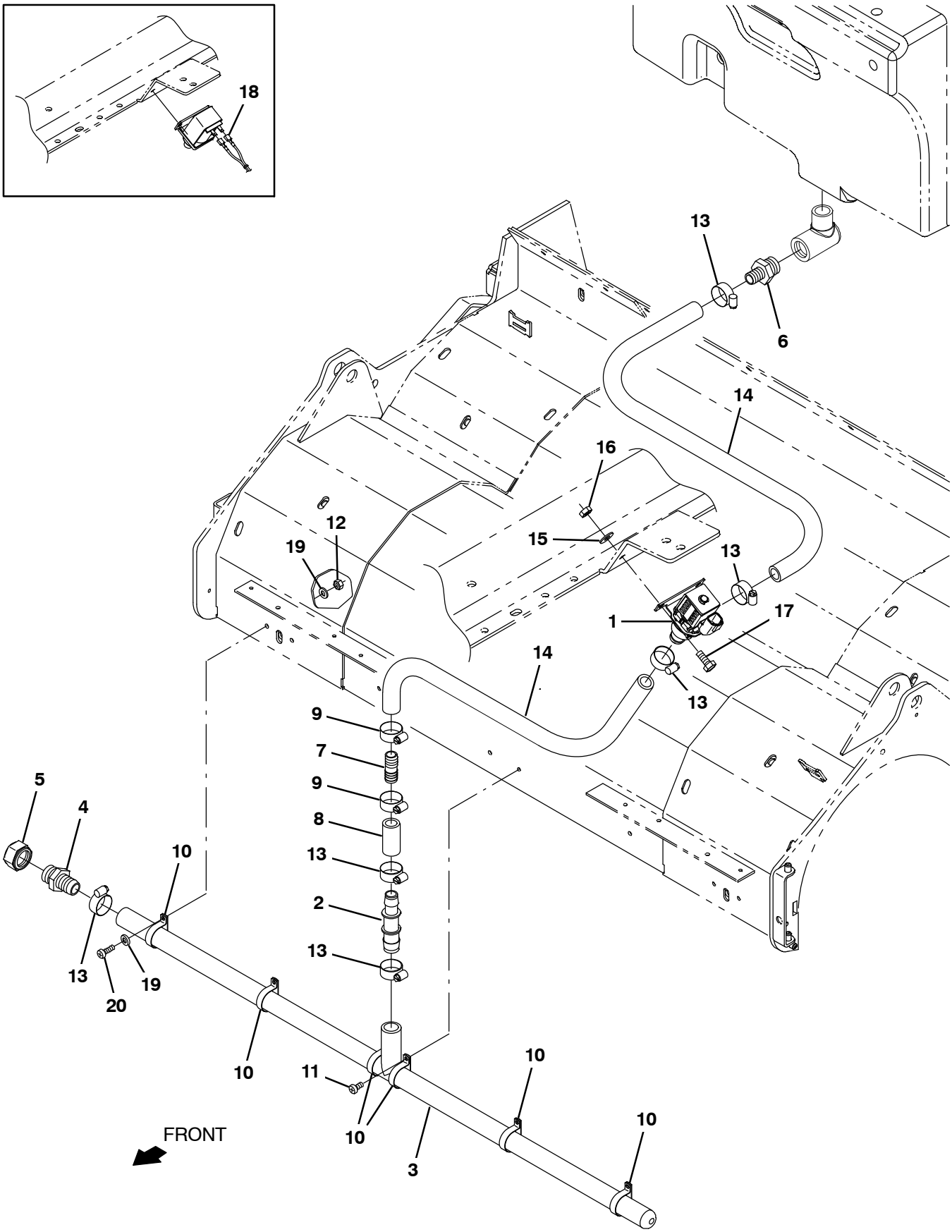

354448

Fig. 47 – Solution Control Group (008000–014000)

Ref.	Part No.	Serial Number	Description	Qty.
1	1076692	(008000–014000)	Valve Assy, Water, Solenoid, 12vdc	1
2	363543	(008000–014000)	Fitting, Plstc, Str, Bm10/Bm12	1
3	1036997	(008000–014000)	Manifold, Bar, Spray, 37.5inch	1
4	79273–2	(008000–014000)	Fitting, Plstc, Str, Bm12/Pm12	1
5	1039064	(008000–014000)	Fitting, Plstc, Cap, Pf12 Hex	1
6	365095	(008000–014000)	Fitting, Plstc, Str, Bm10/Pm12	1
7	365164	(008000–014000)	Fitting, Plstc, Str, Bm10/Bm10	1
8	1015033	(008000–014000)	Hose, Afmkt, Pvc, Brd, 0.62id, 01ft, Clr	1
9	63810	(008000–014000)	Clamp, Hose, Wormdrive, 0.56–1.06d, .56w	2
10	50544	(008000–014000)	Clamp, Cable, Ss, 1.12d X 0.38w, 1h	6
11	09200	(008000–014000)	Screw, Pan, M5 X 0.8 X 12, Ss	4
12	09739	(008000–014000)	Nut, Hex, Lock, M5 X 0.8, Nl, Ss	6
13	63810	(008000–014000)	Clamp, Hose, Wormdrive, 0.56–1.06d, .56w	8
14	1015032	(008000–014000)	Hose, Afmkt, Pvc, Brd, 0.62id, 08ft, Clr	1
15	01684	(008000–014000)	Washer, Flat, 0.25, Ss	2
16	08712	(008000–014000)	Nut, Hex, Lock, M6 X 1.0, Ss, Nl	2
17	08716	(008000–014000)	Screw, Hex, M6 X 1.0 X 20, Ss	2
18	1075394	(008000–010490)	Harness, Ele, Adaptor [2f, Dt To Faston]	1
19	01683	(008000–014000)	Washer, Flat, 10, Ss	4
20	24196	(008000–014000)	Screw, Pan, Phl, M5 X 0.80 X 20, Ss	2

Fig. 48 – Solution Control Group (014001–)

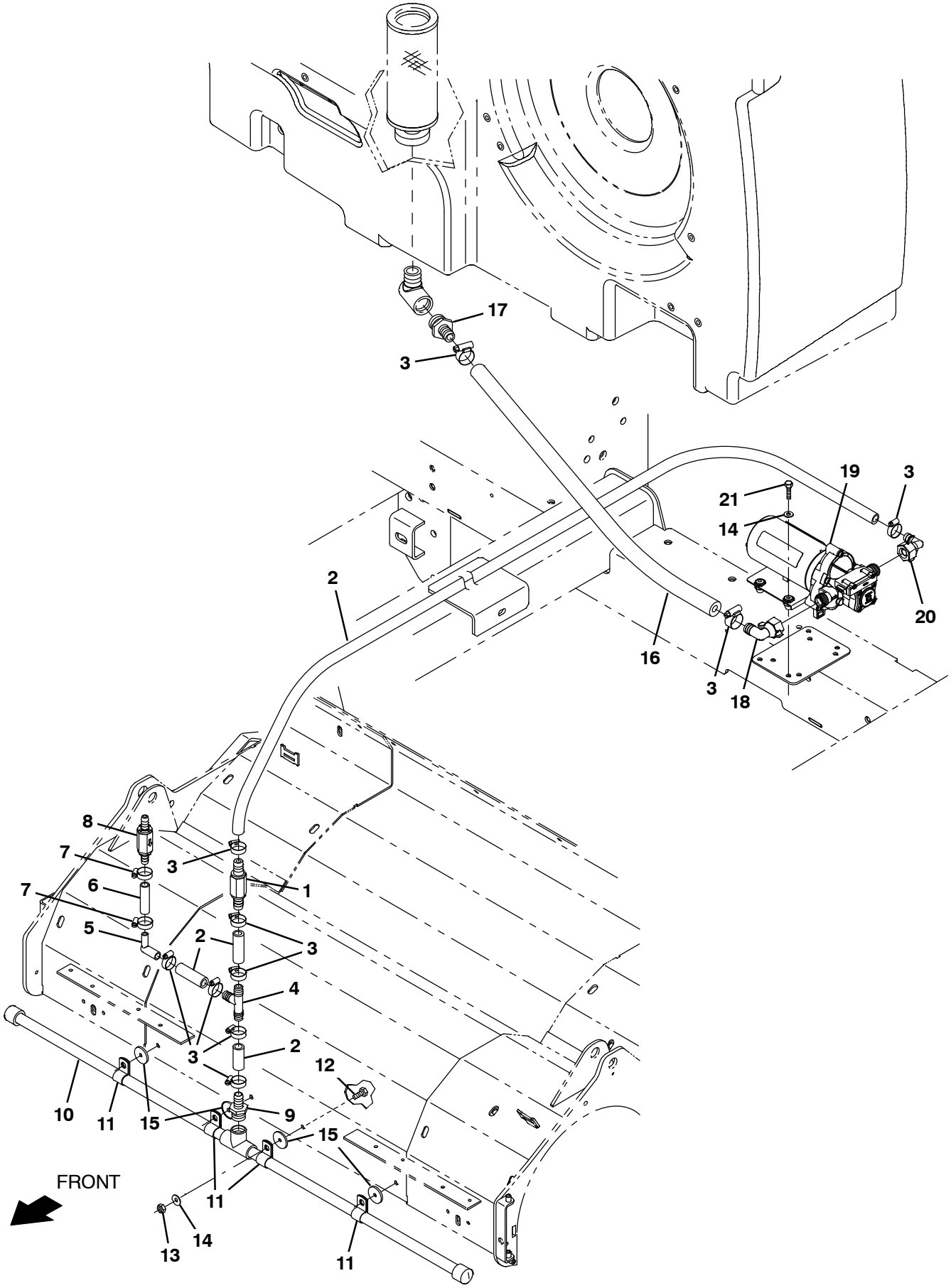

357100 – M20

Fig. 48 – Solution Control Group (014001–)

Ref.	Part No.	Serial Number	Description	Qty.
1	1251530	(014001–)	Valve, Check, 1.0psi, Bm08/Bm08	1
2	1011412	(014001–)	Hose, Afmkt, Pvc, Brd, 0.50id, 08ft, Clr	1
3	54333	(014001–)	Clamp, Hose, Wormdrive, 0.31–0.88d, .31w	10
4	63245–1	(014001–)	Fitting, Plstc, Tee, Bm08/Bm08/Bm08	1
5	222376	(014001–)	Fitting, Plstc, E90, Bm06/Bm08	1
6	1014971	(014001–)	Hose, Afmkt, Pvc, Brd, 0.38id, 01ft, Clr	1
7	43844	(014001–)	Clamp, Hose, Wormdrive, 0.25–0.62d, .31w	1
8	1253873	(014001–)	Valve, Vent, Bm06/Bm06	1
9	79273–4	(014001–)	Fitting, Plstc, Str, Bm08/Pm08	1
10	1076854	(014001–)	Spray Manifold Assy [M20/T20]	1
11	82829	(014001–)	Clamp, Cable, Stl, 0.63d X 0.75w, 1hole	4
12	08716	(014001–)	Screw, Hex, M6 X 1.00 X 20, Ss	4
13	08708	(014001–)	Nut, Hex, Lock, M6 X 1.00, Nl	4
14	01684	(014001–)	Washer, Flat, 0.27b 0.69d .05, Ss	8
15	386063	(014001–)	Washer, Flat, 0.25b 1.12d .12, Ss	4
16	1015032	(014001–)	Hose, Afmkt, Pvc, Brd, 0.62id, 08ft, Clr	1
17	365095	(014001–)	Fitting, Plstc, Str, Bm10/Pm12	1
18	1251921	(014001–)	Fitting, Plstc, E90, Bm10/Pf08	1
19	1253561	(014001–)	Pump, Soltn, Ele, 12v, 3.6 Gpm	1
20	1018499	(014001–)	Fitting, Plstc, E90, Bm08/Pf08s, Swivel	1
21	1228033	(014001–)	Screw, Hex, M5 X 0.80 X 30, Ss	4

Fig. 49 – Recovery Tank Group

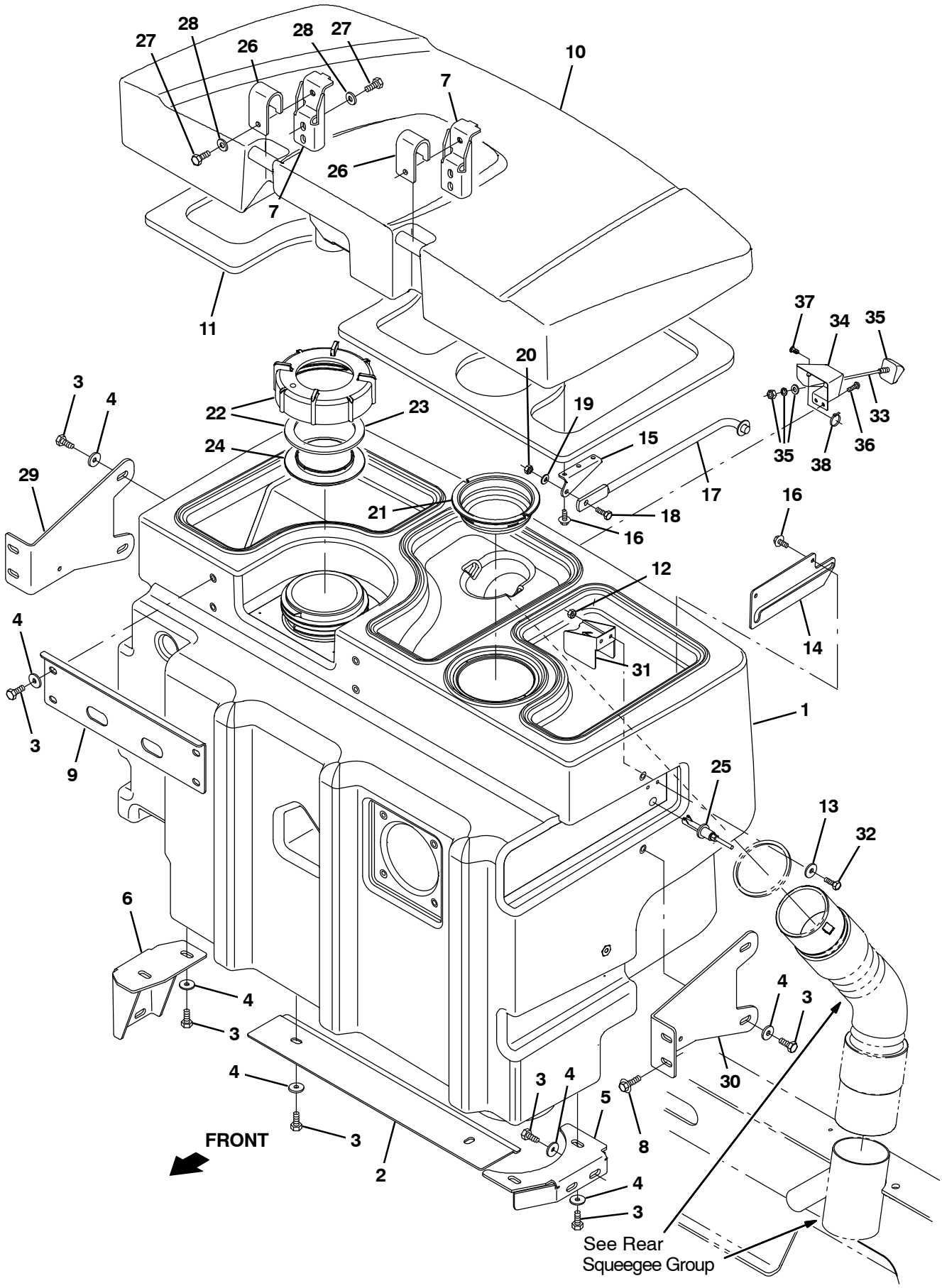

354449 – M20

Fig. 49 – Recovery Tank Group

	Ref.	Part No.	Serial Number	Description	Qty.
	1	1021419	(008000–)	Tank, Recvy, Trimmed	1
	2	1024403	(008000–)	Plate, Tank, Bottom	1
	3	09740	(008000–)	Screw, Hex, M8 X 1.25 X 20, Ss	17
	4	1017218	(008000–)	Washer, Flat, 0.32b 1.00d .12, Ss	15
	5	1020335	(008000–)	Bracket, Sppt, Tank, Lh	1
	6	1020331	(008000–)	Bracket, Sppt, Tank, Rh	1
	7	1039072	(008000–)	Bracket, Sppt, Cover, Tank, Recvy	2
	8	1037346	(008000–)	Screw, Hex, M8 X 1.25 X 25, 9.8, Sems	4
	9	1021090	(008000–)	Plate, Sppt, Tank	1
	10	1022167	(008000–)	Cover, Tank, Recvy, Trimmed	1
	11	1021879	(008000–)	Gasket, Cover, Recvy Tank	1
	12	08712	(008000–)	Nut, Hex, Lock, M6 X 1.00, Ss, Nl	2
	13	76426	(008000–)	Washer, Sealing, 0.28b 0.75d Ss, Neo	2
	14	1025620	(008000–)	Plate, Mtg, Prop Rod	1
	15	1025619	(008000–)	Bracket, Mtg, Prop Rod	1
	16	1046798	(008000–)	Screw, Hex, .25–14 X 0.75, Fmg/Ab, Ss	4
	17	54615	(008000–)	Arm Wldt, Safety, Sppt, Seat, .38d 10.1l	1
	18	08716	(008000–)	Screw, Hex, M6 X 1.0 X 20, Ss	1
	19	01684	(008000–)	Washer, Flat, 0.25, Ss	1
	20	08712	(008000–)	Nut, Hex, Lock, M6 X 1.0, Ss, Nl	1
	21	1222035	(008000–)	Screen, Vacuum, Yellow	1
▽	22	24358	(008000–)	Cap Assy, Tank, Drain	1
▲	23	1031699	(008000–)	Gasket, 4.05id 5.29od .19 [Buna]	1
	24	86636	(008000–)	Cover, Tank	1
	25	385685	(008000–)	Sensor, Level, Liq, 14vdc 01a .62–11	1
	26	1039049	(008000–)	Bracket, Mtg, Cover, Recvy Tank	2
	27	16735	(008000–)	Screw, Hex, M8 X 1.25 X 16, 8.8	6
	28	32491	(008000–)	Washer, Flat, 0.31, Std	6
	29	1038941	(008000–)	Bracket, Sppt, Tank, Rh	1
	30	1038927	(008000–)	Bracket, Sppt, Tank, Lh	1
	31	1037816	(008000–)	Bracket, Protector, Float Switch	1
	32	09007	(008000–)	Screw, Hex, M6 X 1.00 X 25, Ss	2
	33	1224979	(008000–)	Cable, Camera, 236.2l [Hvs] (PRO PANEL ONLY)	1
	34	1225989	(008000–)	Bracket, Mtg, Camera [M20/M30] (PRO PANEL ONLY)	1
	35	1218851	(008000–)	Camera, Color, Fixed (PRO PANEL ONLY)	1
	36	382320	(008000–)	Screw, Pan, Phl, 12–16 X 0.50, F/ Plstc (PRO PANEL ONLY)	2
	37	1071085	(008000–)	Clip, Tie, 0.25d, Plstc (PRO PANEL ONLY)	1
	38	763114	(008000–)	Tie, Cable, 11.3l, 2.75d Max (PRO PANEL ONLY)	1

Fig. 50 – Recovery Tank Drain Group

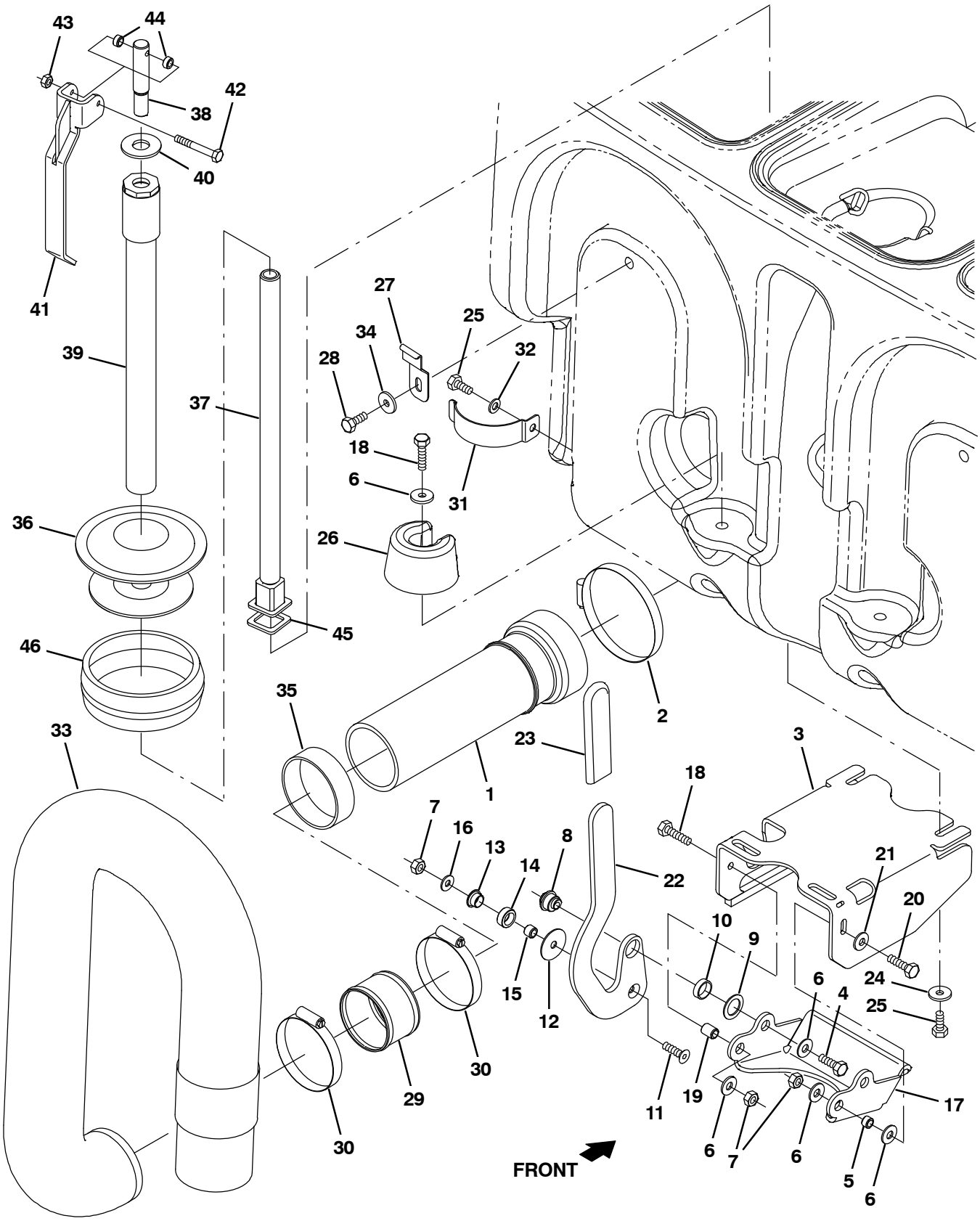

354450

Fig. 50 – Recovery Tank Drain Group

	Ref.	Part No.	Serial Number	Description	Qty.
	1	9003794	(008000–)	Tube Kit, Tank, Recvy, Replmt	1
	2	23498	(008000–)	Clamp, Hose, Wormdrive, 3.56–4.50d, .50w	1
	3	1042010	(008000–)	Mount Wldt, Valve, Pinch, Lh	1
	4	39277	(008000–)	Screw, Hex, M8 X 1.25 X 25, 8.8	1
	5	222516	(008000–)	Sleeve, P/M, 0.31b 0.50d 0.3l [430ss]	1
	6	32491	(008000–)	Washer, Flat, 0.31, Std	5
	7	08713	(008000–)	Nut, Hex, Lock, M8 X 1.25, Nl, Ss	3
	8	1024599	(008000–)	Bushing, Eccentric, Adj	1
	9	1026051	(008000–)	Washer, Flat, 0.79b 1.18d .06, Nyl	1
	10	74090	(008000–)	Bushing, Sleeve, 0.75b 0.88d 0.25l	1
	11	79506	(008000–)	Screw, Flt, M8 X 1.25 X 30, Ss	1
	12	1028701	(008000–)	Washer, Thrust, 0.34b 1.50d .06	1
	13	15648	(008000–)	Bushing, Flng, 0.50b 0.59d 0.38l	1
	14	1028691	(008000–)	Roller, Brg	1
	15	1028690	(008000–)	Tube, 0.50d 0.32b 00.4l, Ss	1
	16	1017218	(008000–)	Washer, Flat, 0.32b 1.00d .12, Ss	1
	17	1024535	(008000–)	Arm, Pinch	1
	18	06955	(008000–)	Screw, Hex, M8 X 1.25 X 35, 8.8	2
	19	80395	(008000–)	Sleeve, P/M, 0.31b 0.50d 0.7l [430ss]	1
	20	76570	(008000–)	Screw, Hex, M8 X 1.25 X 30, 8.8	1
	21	41186	(008000–)	Washer, Flat, Belleville, .31	1
	22	1027039	(008000–)	Handle, Valve, Pinch, Lh	1
	23	1023502	(008000–)	Grip, Handle	1
	24	1017218	(008000–)	Washer, Flat, 0.32b 1.00d .12, Ss	2
	25	09740	(008000–)	Screw, Hex, M8 X 1.25 X 20, Ss	5
	26	1022137	(008000–)	Plug, Hose, Pyu	2
	27	1025480	(008000–)	Bracket, Retaining, Hose	1
	28	15675	(008000–)	Screw, Hex, M8 X 1.25 X 16, Ss	1
	29	1041953	(008000–)	Tube, 2.90id 3.00od 02.4l, Ss	1
	30	43555	(008000–)	Clamp, Hose, Wormdrive, 2.50–3.50d, .50w	2
	31	1024558	(008000–)	Strap, Retaining, Hose	1
	32	39349	(008000–)	Washer, Flat, 0.31 Sae	1
	33	1019424	(008000–)	Hose, Drain, 3.00id X 48.0l	1
	34	01685	(008000–)	Washer, Flat, 0.31, Ss	2
	35	1031309	(008000–)	Tube, Acrylic, Hose, Pinch	1
▽		9003313	(008000–)	Plug Kit, Drain, Recvy, Ci [M20 & T20]	1
▲	36	1022370	(008000–)	Plug, Drain, Expandable, 4.75–6.00	1
▲	37	1028328	(008000–)	Tube Wldt, Plug, Drain	1
▲	38	1028173	(008000–)	Pin, Lift, Drain	1
▲	39	1072885	(008000–)	Tube Assy, Plug, Drain	1
▲	40	1028522	(008000–)	Washer, Flat, .78b 1.75d .18, Ss	1
▲	41	1028211	(008000–)	Handle Wldt, Drain	1
▲	42	58979	(008000–)	Screw, Hex, M6 X 1.0 X 55, Ss	1
▲	43	08712	(008000–)	Nut, Hex, Lock, M6 X 1.0, Ss, Nl	1
▲	44	360801	(008000–)	Sleeve, 0.31b 0.50d 0.3l, Ss	2
▲	45	1035044	(008000–)	Seal, Shaft, Drain Plug	1
▲	46	1039652	(008000–)	Seal, Plug, Drain, Nitrile	1

Fig. 51 – Vacuum Fan Group, Scrubbing

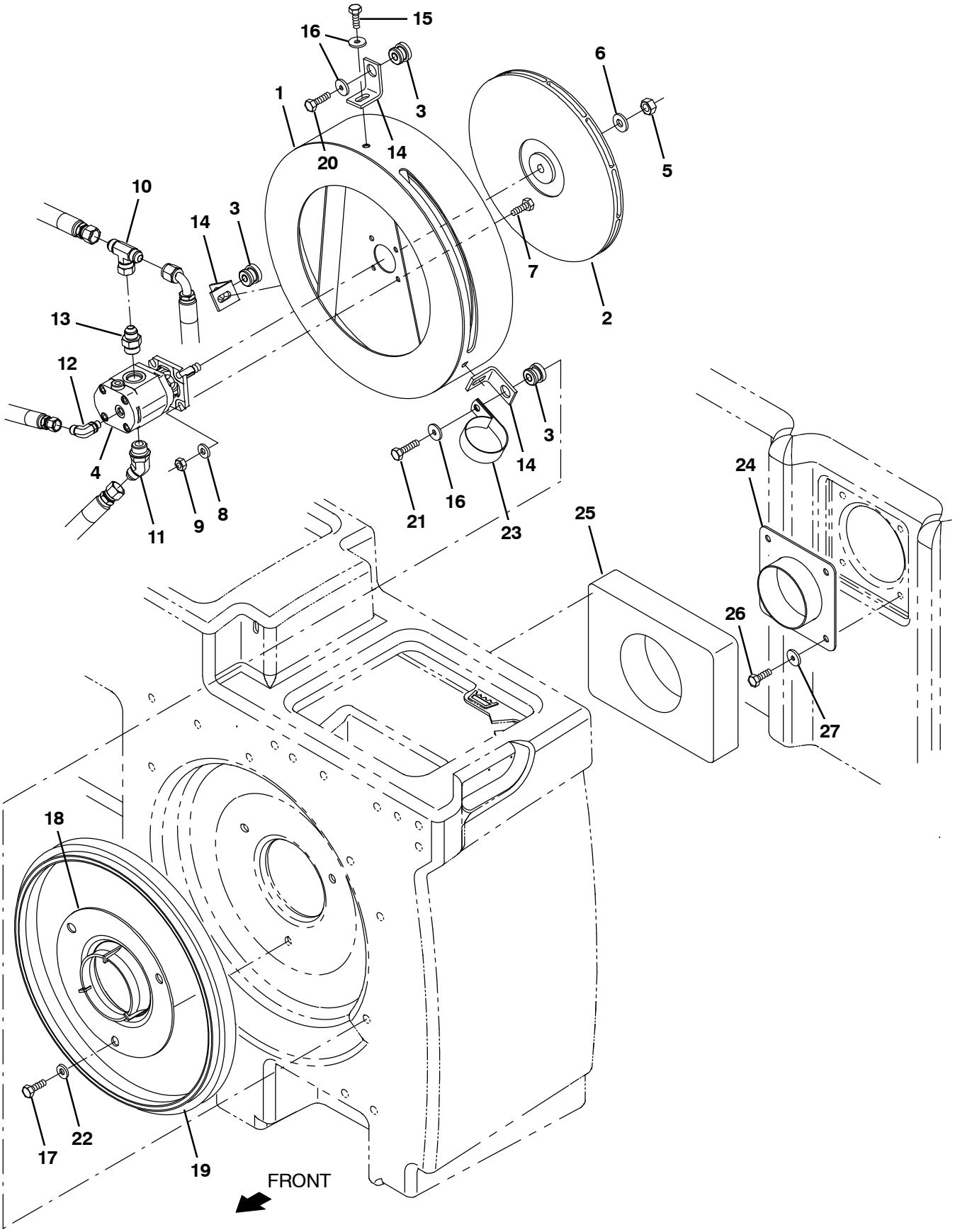

356555 – M20, NA

Fig. 51 – Vacuum Fan Group, Scrubbing

	Ref.	Part No.	Serial Number	Description	Qty.
▽		9016241	(008000–)	Fan Kit, Scb, Replmt [M20/T20/M30]	1
▲	1	1068611	(008000–)	Plate Wldt, Mtg, Fan	1
▲	2	1062033	(008000–)	Impeller, 11.81d X 0.500b	1
▲	3	54274	(008000–)	Isolator, Vib, Bshg, 1.1d 0.6l .4b 0.78h	3
▲▽		9016242	(008000–)	Motor Kit, Replmt [M20/T20/M30]	1
▲▲	4	1076027	(008000–)	Motor, Hyd, Gear, Ext 0.17 Lh 3000	1
▲▲	5	07788	(008000–)	Nut, Hex, Std, M12 X 1.75, Ss	1
▲▲	6	36328	(008000–)	Washer, Flat, Belleville, .50	1
▲▲	7	09010	(008000–)	Screw, Hex, M8 X 1.25 X 25, Ss	4
▲▲	8	01685	(008000–)	Washer, Flat, 0.38b 0.88d .08, Ss	4
▲▲	9	08713	(008000–)	Nut, Hex, Lock, M8 X 1.25, Nl, Ss	4
▲▲	10	76315	(008000–)	Fitting, Hyd, Tee, Jf08/Jm08/Jm08, Br	1
▲▲	11	47513	(008000–)	Fitting, Hyd, E45, Jm08/Om10	1
▲▲	12	77098	(008000–)	Fitting, Hyd, E90, Jm06/Om04	1
▲▲	13	56692	(008000–)	Fitting, Hyd, Str, Jm08/Om10	1
▲	14	1068644	(008000–)	Angle, Sppt, Fan	3
▲	15	39277	(008000–)	Screw, Hex, M8 X 1.25 X 25, 8.8	3
▲	16	1017218	(008000–)	Washer, Flat, 0.32b 1.00d .12, Ss	6
▲	17	09740	(008000–)	Screw, Hex, M8 X 1.25 X 20, Ss	3
▲	18	1059100	(008000–)	Housing, Fan, Radial Discharge, Sq Inlet	1
▲	19	1031617	(008000–)	Seal, Afmkt, Bulb, Str, .75d F/07ga 08ft	1
▲	20	09011	(008000–)	Screw, Hex, M8 X 1.25 X 30, Ss	2
▲	21	09023	(008000–)	Screw, Hex, M8 X 1.25 X 35, Fl, Ss	1
▲	22	01685	(008000–)	Washer, Flat, 0.38b 0.88d .08, Ss	3
	23	70157	(008000–)	Clamp, Cable, Ss, 2.50d X 1.00w, 1hole	1
	24	1023754	(008000–)	Plate Wldt, Hose, Vacuum	1
	25	1060716	(008000–)	Gasket, 2.00, 07.87w 10.24l, Adh	1
	26	09740	(008000–)	Screw, Hex, M8 X 1.25 X 20, Ss	4
	27	1017218	(008000–)	Washer, Flat, 0.32b 1.00d .12, Ss	4

Fig. 52 – Vacuum Fan Group, Sweeping

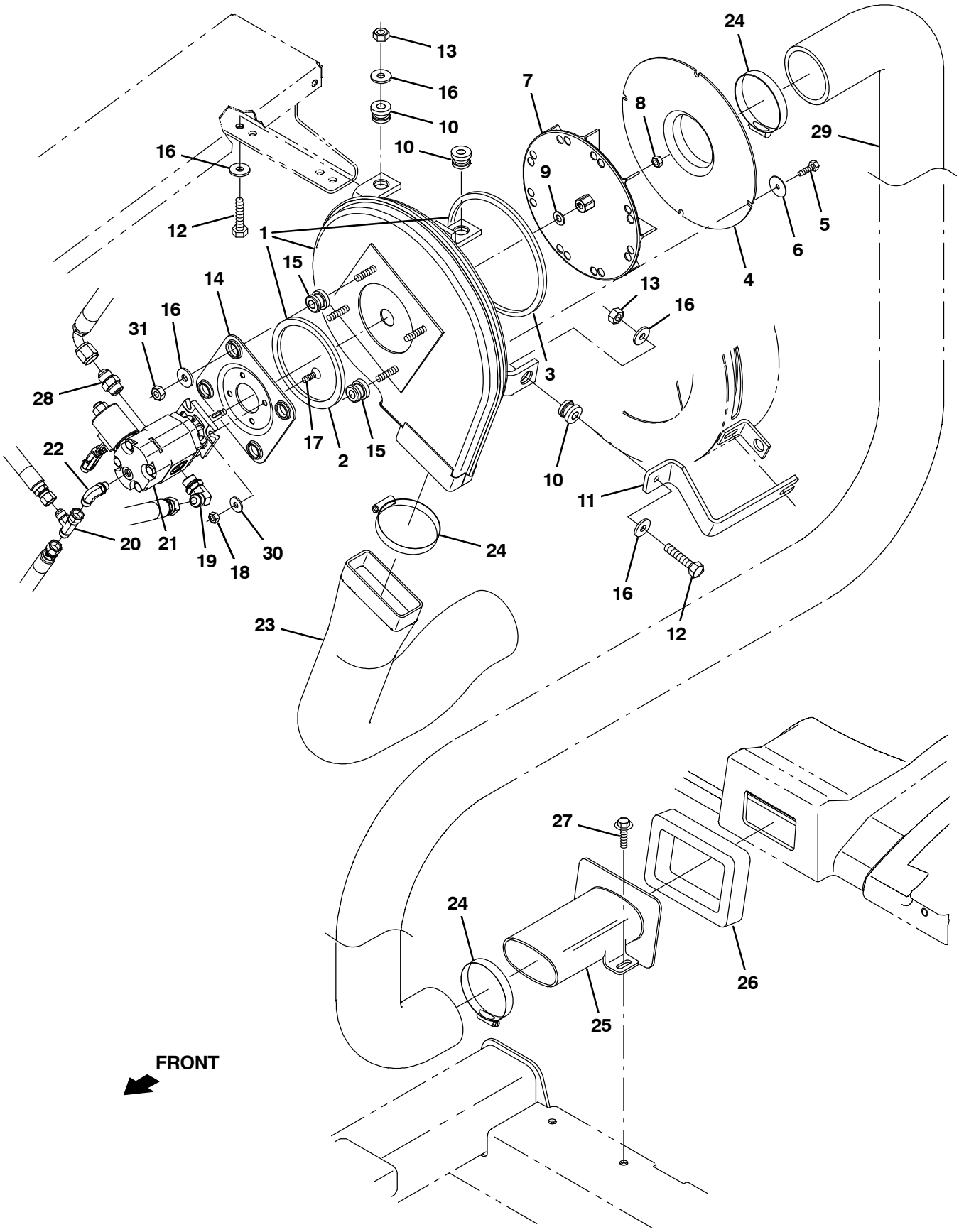

354452 – M20, G/LP

Fig. 52 – Vacuum Fan Group, Sweeping

	Ref.	Part No.	Serial Number	Description	Qty.
▽	1	9002683	(008000–)	Housing Assy, Vacfan, Swpr	1
▲	2	59967	(008000–)	Seal, Ure, 0.38 0.75w 13.2l Adh	1
▲	3	1015221	(008000–)	Seal, Afmkt, Ure, Adh, 0.38, 0.75w 03ft	1
	4	1018216	(008000–)	Fan Wldt, Vac, Inlet	1
	5	34323	(008000–)	Screw, Hex, .25–20 X 0.75, Nl	4
	6	41178	(008000–)	Washer, Flat, 0.25 Fender	4
	7	74454	(008000–)	Impeller, 9.00d X 1.40w X 0.376b	1
	8	31241	(008000–)	Nut, Hex, Lock, .31–24, Nl, Thin	1
	9	32485	(008000–)	Washer, Flat, 0.38 Sae	1
	10	59649	(008000–)	Isolator, Vib, Bshg, 1.1d 0.6l .4b 0.78h	3
	11	1074010	(008000–)	Bar, Isolator, Vacfan [M20]	1
	12	39285	(008000–)	Screw, Hex, M10 X 1.5 X 40, 8.8	3
	13	41430	(008000–)	Nut, Hex, Lock, M10 X 1.5, Nl	3
	14	54275A	(008000–)	Bracket, Mtg, Motor	1
	15	54274	(008000–)	Isolator, Vib, Bshg, 1.1d 0.6l .4b 0.78h	4
	16	1014563	(008000–)	Washer, Flat, 0.40b 1.12d .12, Ss	10
	17	39534	(008000–)	Screw, Flt, Soc, .25–20 X 1.00, Al	4
	18	32981	(008000–)	Nut, Hex, Lock, .25–20, Nl	4
	19	44868	(008000–)	Fitting, Hyd, E90, Jm08/Om08	1
	20	42215	(008000–)	Fitting, Hyd, Tee, Jf06/Jm06/Jm06, Run	1
	21	1071240	(008000–)	Motor, Hyd, Gear, Ext 0.17 Lh 3000	1
	22	77098	(008000–)	Fitting, Hyd, E90, Jm06/Om04	1
	23	1025756	(008000–)	Muffler, Vacfan, 4.0id	1
	24	23498	(008000–)	Clamp, Hose, Wormdrive, 3.56–4.50d, .50w	3
	25	1025841	(008000–)	Tube, Transition, Casting	1
	26	1018209	(008000–)	Gasket, Hppr, Transition	1
	27	1037346	(008000–)	Screw, Hex, M8 X 1.25 X 25, 9.8, Sems	2
	28	44869	(008000–)	Fitting, Hyd, Str, Jm08/Om08	1
	29	1018252	(008000–)	Hose, Flex, Vacuum, 3.5d 32.0l	1
	30	32483	(008000–)	Washer, Flat, 0.25, Sae	4
	31	36643	(008000–)	Nut, Hex, Lock, .38–16, Nl, Thin	4

Fig. 53 – Hydraulic Schematic

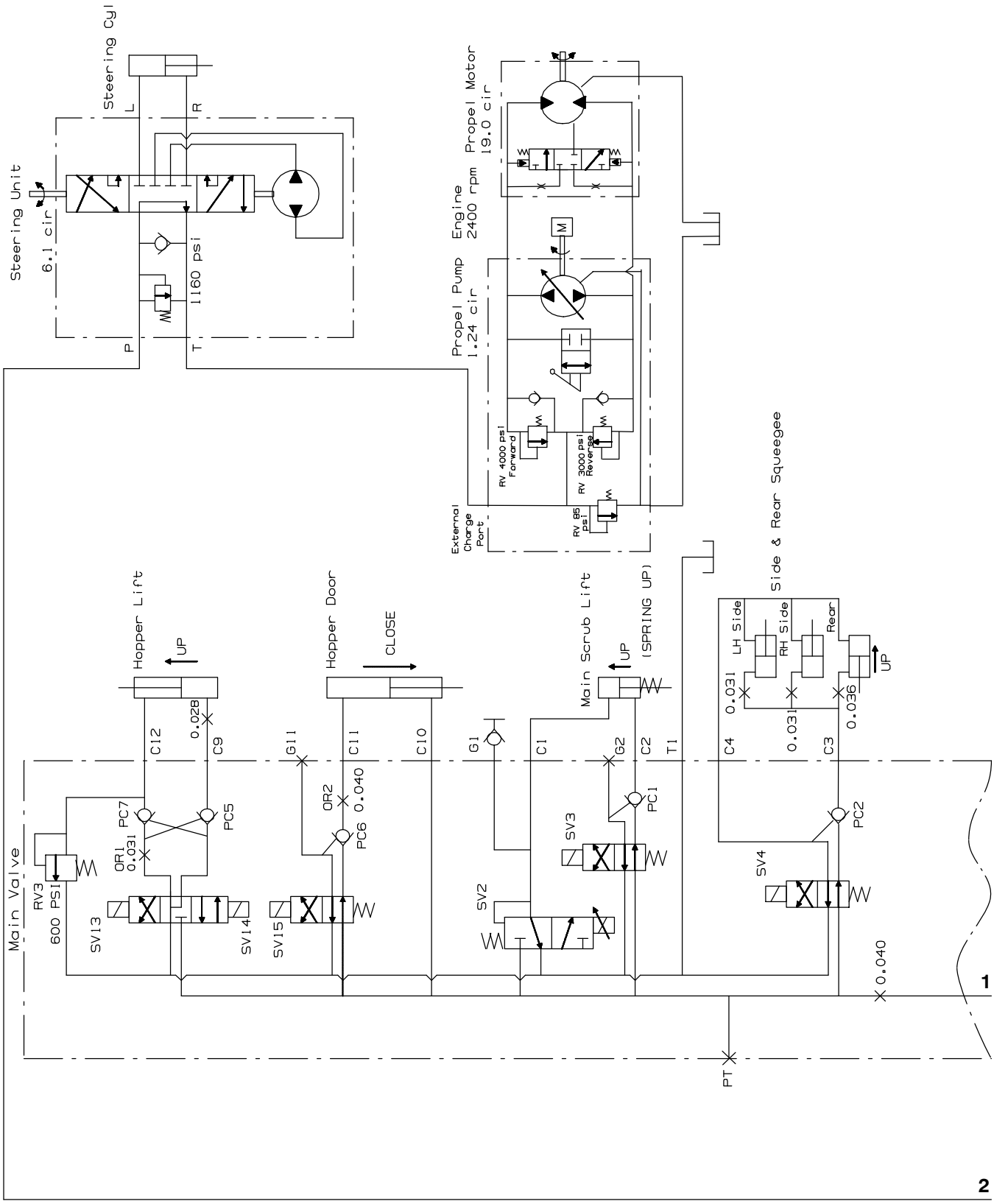

354453, 1018547 – M20

Fig. 53 – Hydraulic Schematic

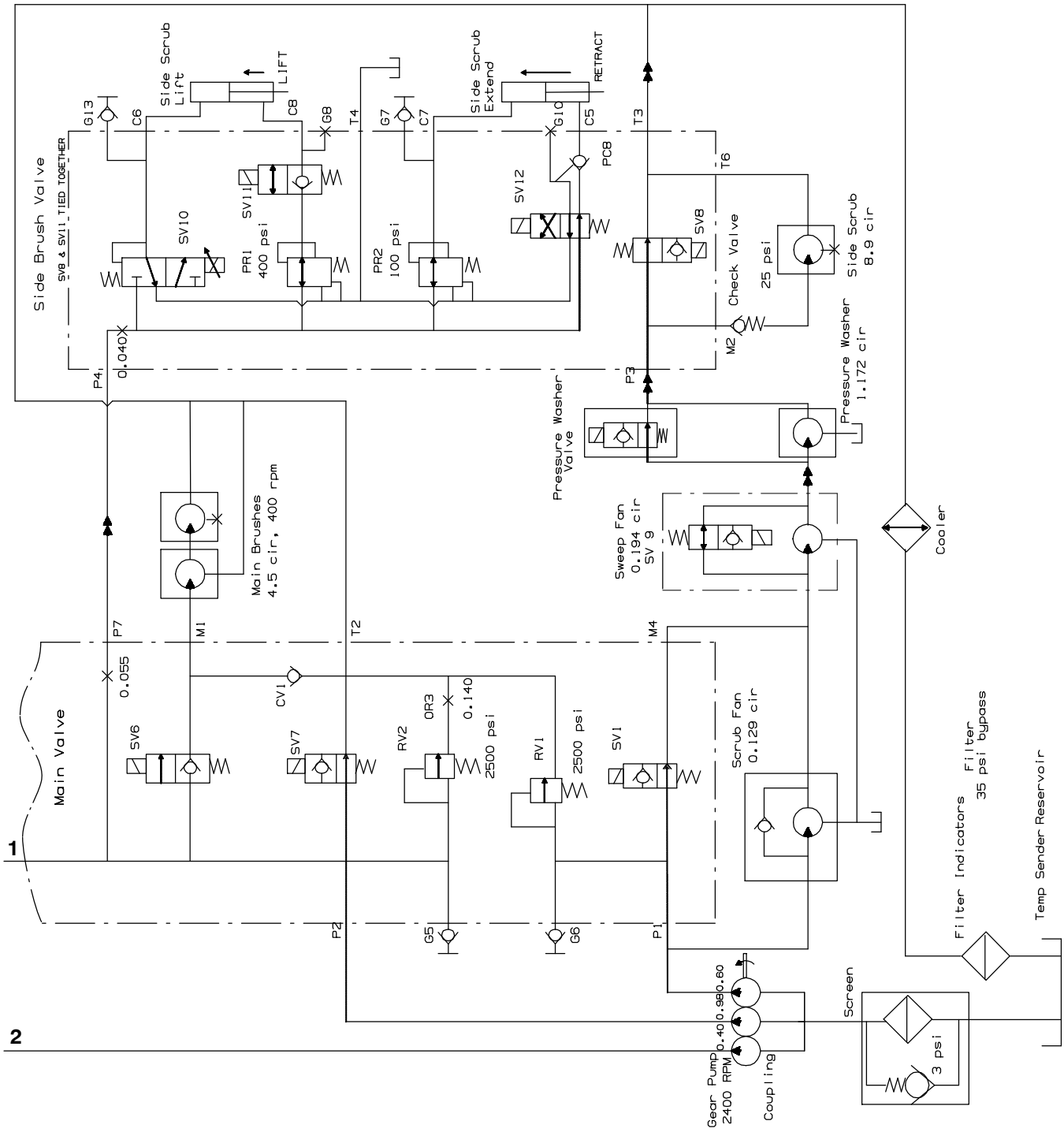

354453, 1018547 – M20

Fig. 54 – Hydraulic Hose Group, Steering and Propel

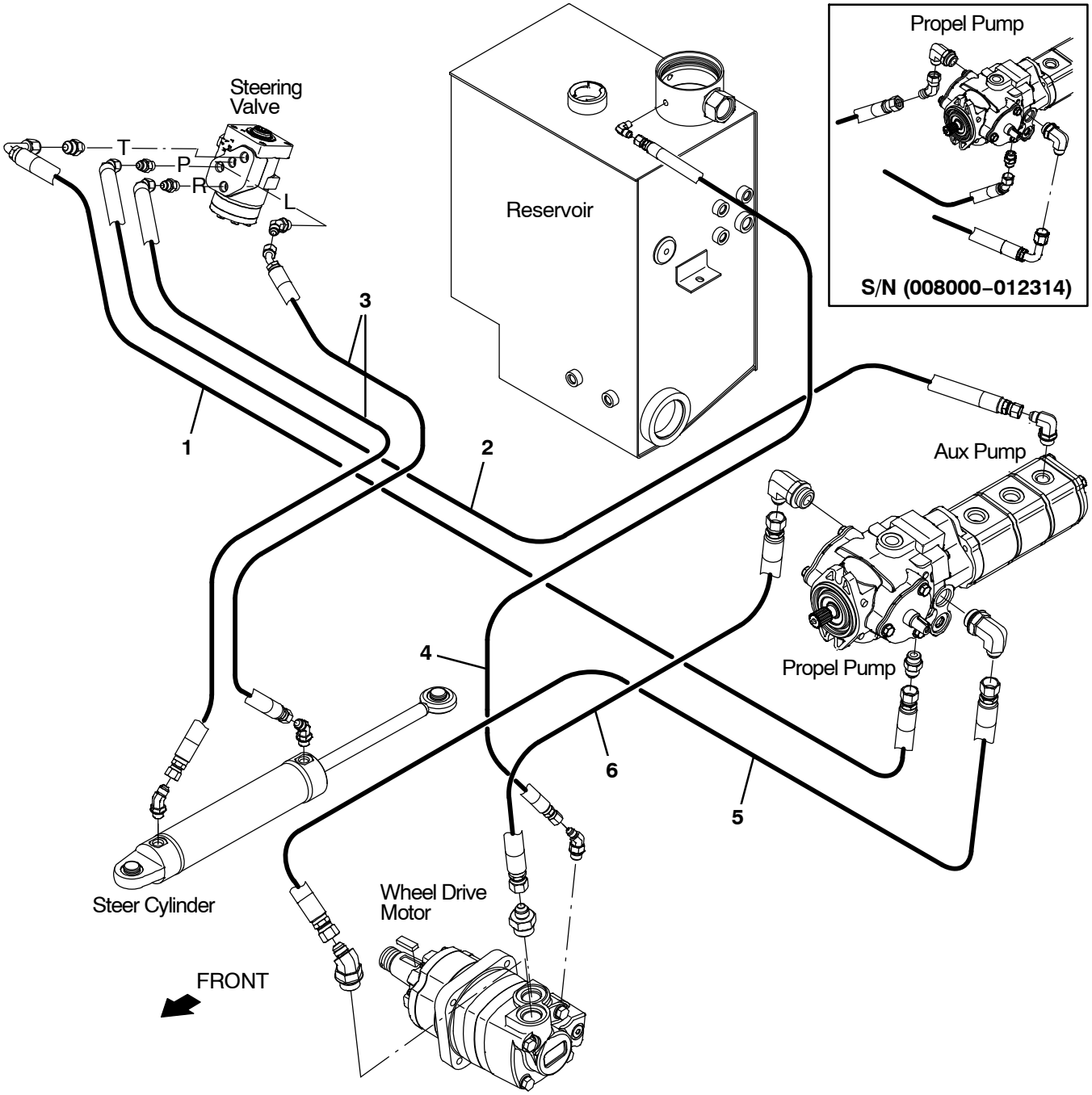

354392 – G/LP

Fig. 54 – Hydraulic Hose Group, Steering and Propel

Ref.	Part No.	Serial Number	Description	Qty.
1	1229745	(008000–)	Hose, Hyd, Tc08, Jfoee90/Jf08str, 96	1
2	1226062	(008000–)	Hose, Hyd, Tc06, Jf06e45/Jf06str, 110.0	1
3	1226063	(008000–)	Hose, Hyd, Tc06, Jf06e45/Jf06str, 45.0	2
4	1038569	(008000–012314)	Hose, Hyd, Spcl, Jf10str/Jf10str, 56.5	1
4	1253469	(012315–)	Hose, Hyd, Mold, Jf08str/Jf08str, 066.5	1
5	1023488	(008000–012314)	Hose, Hyd, Spcl, Jf10e90/Jf10str, 63.0	1
5	1253468	(012315–)	Hose, Hyd, Mold, Jf08str/Jf08str, 078.4	1
6	1030404	(008000–)	Hose, Hyd,Med04, Jf04str/Jf04str, 066.0	1

Fig. 55 – Hydraulic Hose Group, Pump and Vacuum Fans

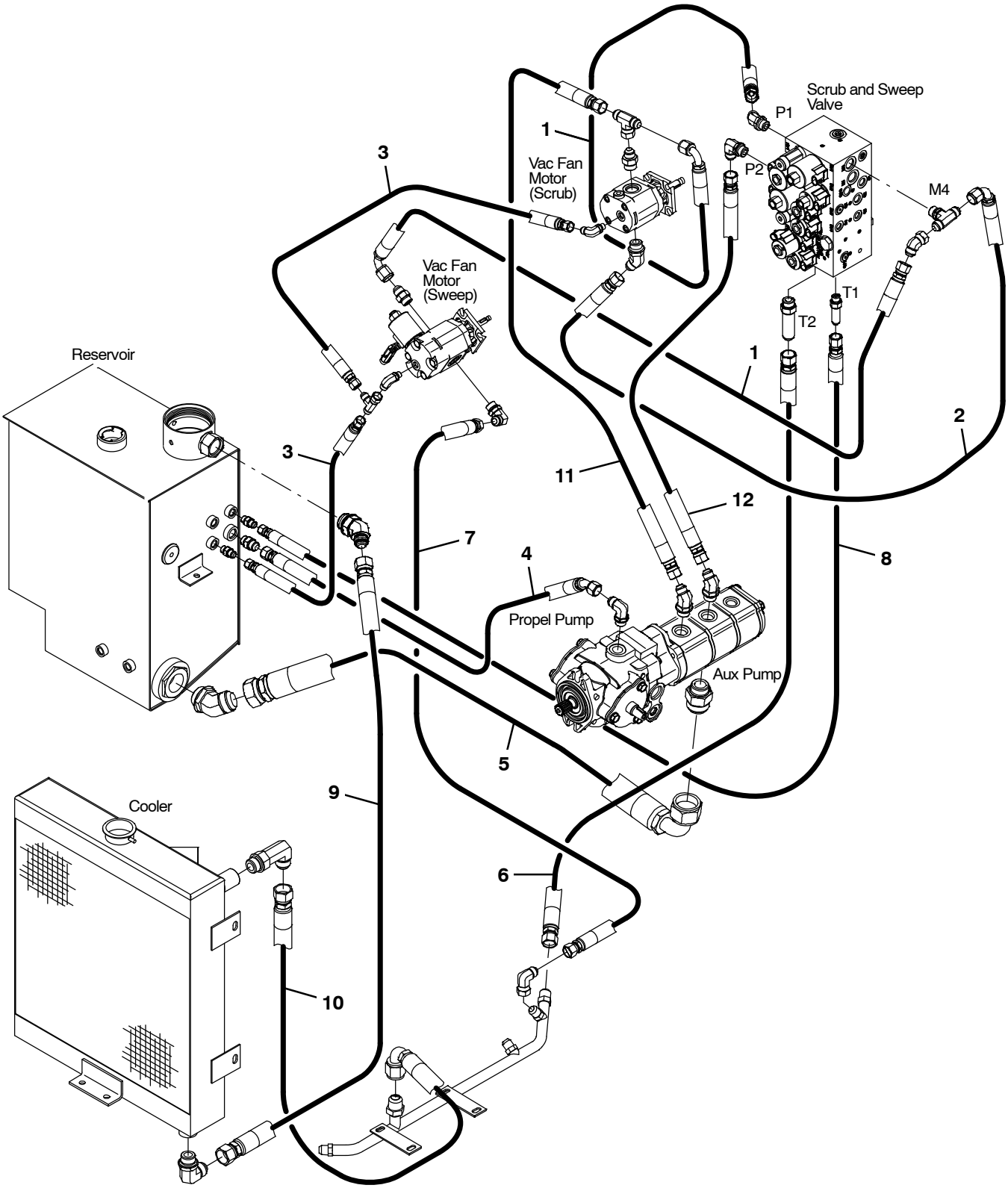

356559 – M20, G/LP

Fig. 55 – Hydraulic Hose Group, Pump and Vacuum Fans

Ref.	Part No.	Serial Number	Description	Qty.
1	71741	(008000–)	Hose, Hyd, Tc08, Jf08e90/Jf08str, 046.0	2
2	396255	(008000–)	Hose, Hyd, Tc08, Jf08str/Jf08e90, 031.0	1
3	16431	(008000–)	Hose, Hyd, Med06, Jf06str/Jf06str, 022.0	2
4	1023607	(008000–)	Hose, Hyd, Med08, Jf08str /Jf08e45, 21.0	1
5	34351	(008000–)	Hose, Hyd, Suc20, Jf20e90/Jf20str, 032.0	1
6	1040655	(008000–)	Hose, Hyd, Med10, Jf10Str/Jf10Str, 036.0	1
7	1036945	(008000–)	Hose, Hyd, Tc08, Jf08str/Jf08str, 031.0	1
8	71556	(008000–)	Hose, Hyd, Med06, Jf06Str/Jf06Str, 042.0	1
9	1028145	(008000–)	Hose, Hyd, Med12, Jf12str/Jf12str, 066.0	1
10	1050436	(008000–)	Hose, Hyd, Med12, Jf12e90/Jf12str, 029.0	1
11	1026645	(008000–)	Hose, Hyd, Tc08, Jf08E45/Jf08Str, 026.0	1
12	1023606	(008000–)	Hose, Hyd, Tc08, Jf08Str/Jf08Str, 021.0	1

Fig. 56 – Hydraulic Hose Group, Brush and Hopper

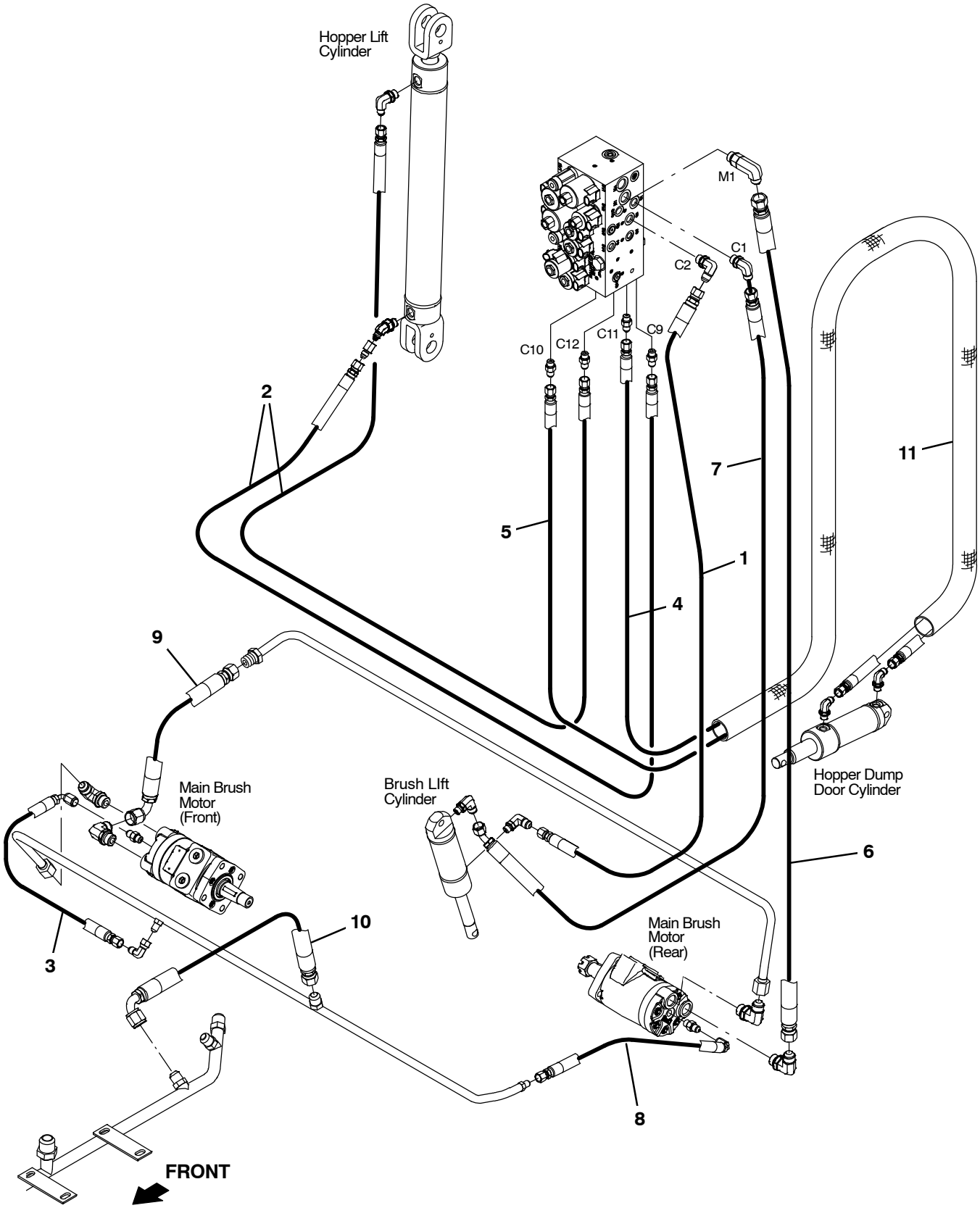

354390

Fig. 56 – Hydraulic Hose Group, Brush and Hopper

Ref.	Part No.	Serial Number	Description	Qty.
1	1036939	(008000–)	Hose, Hyd, Tc06, Jf06str/Jf06str, 054.0	1
2	1040628	(008000–)	Hose, Hyd, Tc04, Jf04str/Jf04str, 096.0	2
3	387281	(008000–)	Hose, Hyd, Tc04, Jf04e90/Jf04str, 020.0	1
4	1042775	(008000–)	Hose, Hyd, Spcl, Jf04str/Jf04str, 138.0	1
5	1042776	(008000–)	Hose, Hyd, Spcl, Jf04str/Jf04str, 132.0	1
6	1024764	(008000–)	Hose, Hyd, Tc08, Jf08str/Jf08str, 48.0	1
7	1023769	(008000–)	Hose, Hyd, Tc 06, Jf06str /Jf06e45, 56.0	1
8	57946	(008000–)	Hose, Hyd, Med04, Jf04e90/Jf04str, 016.0	1
9	1025544	(008000–)	Hose, Hyd, Tc08, Jf08e90/Jf08str, 13.0	1
10	381857	(008000–)	Hose, Hyd, Tc08, Jf08e90/Jf08str, 018.0	1
11	1235405	(008000–)	Sleeve, Nyl, 1.22id, 95.0l	1

Fig. 57 – Hydraulic Hose Group, Squeegee Lift

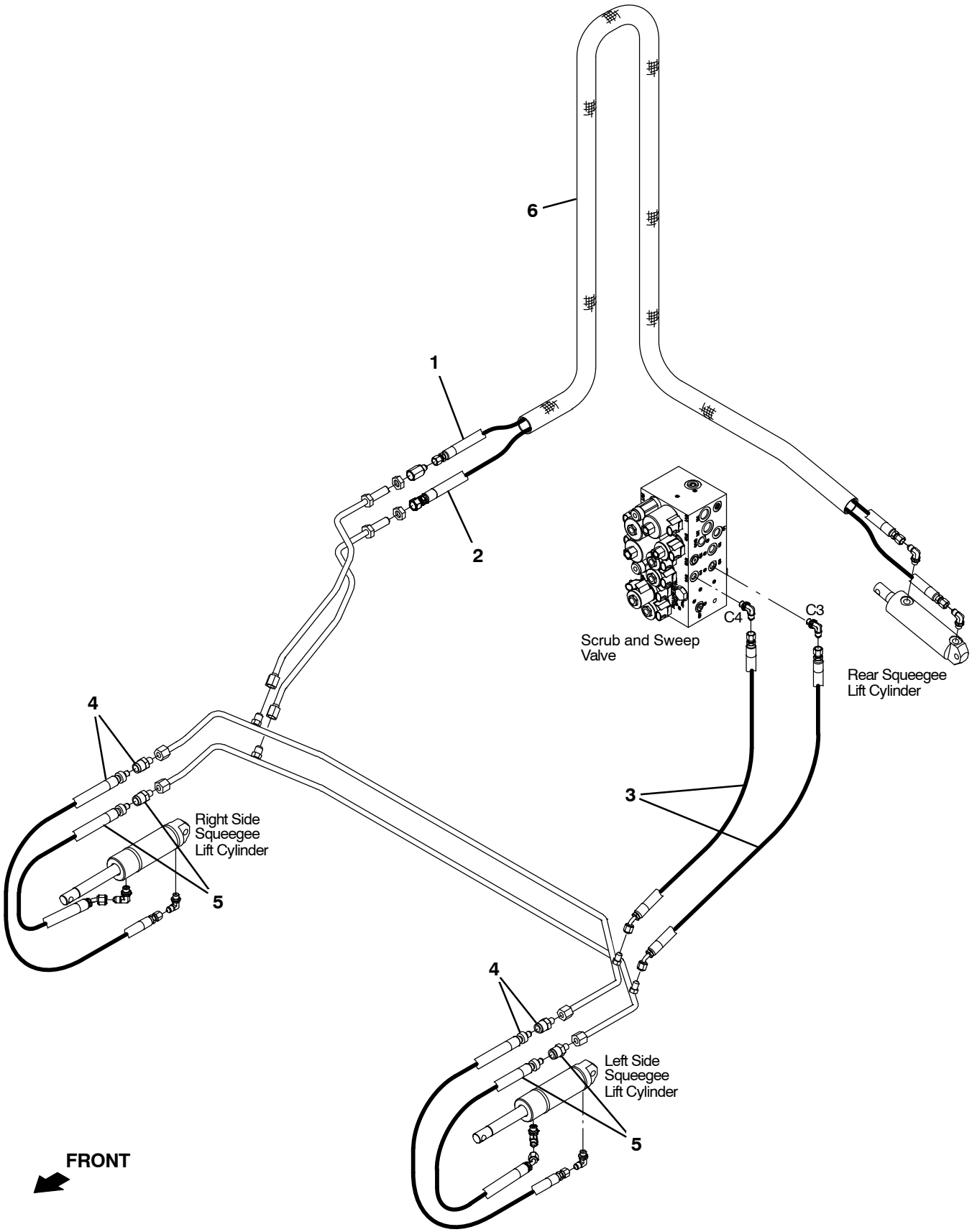

354391 – M20

Fig. 57 – Hydraulic Hose Group, Squeegee Lift

Ref.	Part No.	Serial Number	Description	Qty.
1	1024688	(008000–)	Hose, Hyd, Spcl, Jf04str/Jf04str, 124.0	1
2	1025551	(008000–)	Hose, Hyd, Spcl, Jf04str/Jf06str, 128.0	1
3	1030709	(008000–)	Hose, Hyd,Tc 04, Jf04str /Jf04e45 , 35.0	2
4	1045759	(008000–)	Hose, Hyd, Tco4, Jf04Str/Qm06, 028.0	2
5	1037053	(008000–)	Hose, Hyd, Tc04, Jf04e45/Qm06, 026.0	2
6	1235405	(008000–)	Sleeve, Nyl, 1.22id, 95.0l	1

Fig. 58 – Hydraulic Pumps Group

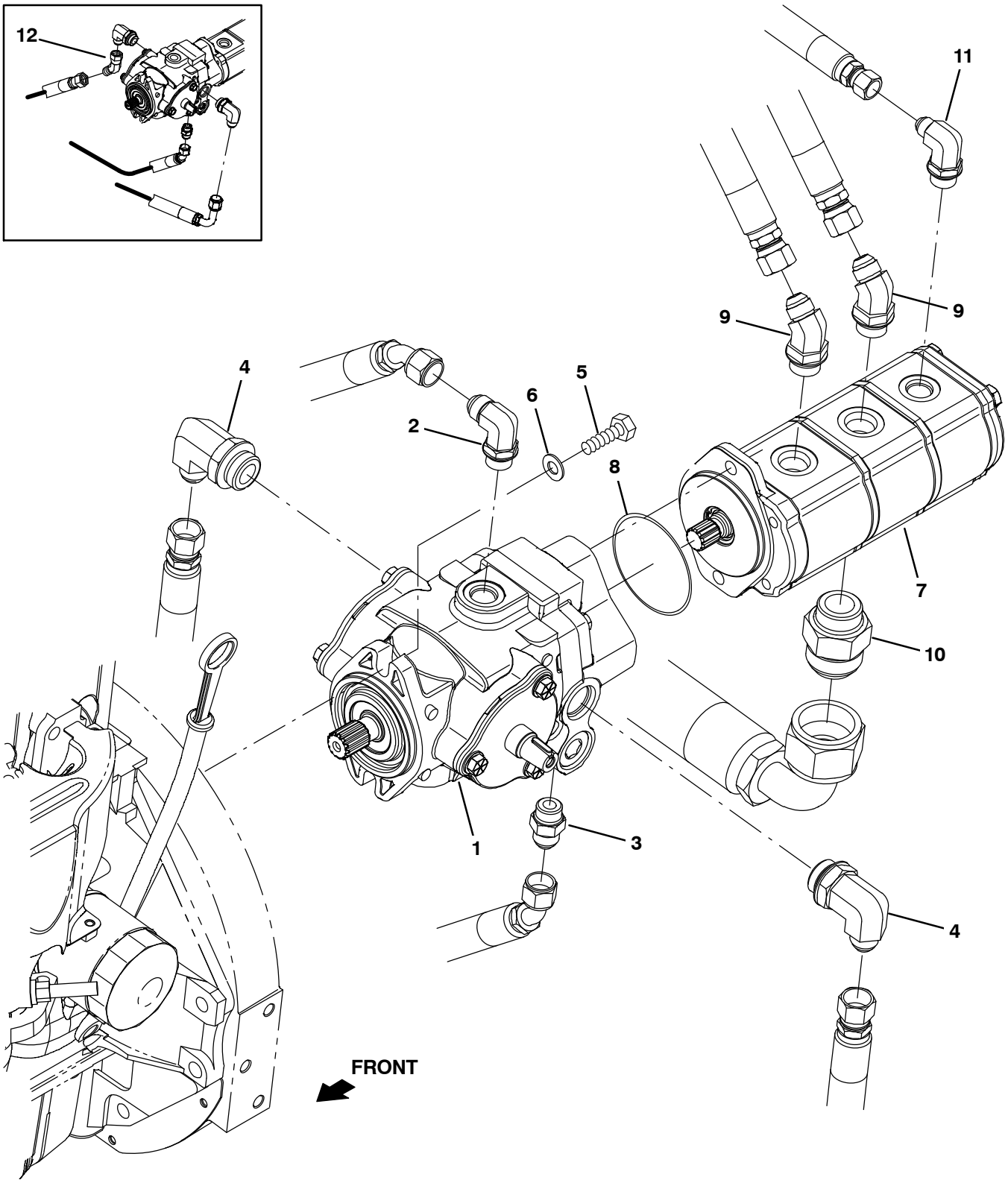

354454 – G/LP

Fig. 58 – Hydraulic Pumps Group

Ref.	Part No.	Serial Number	Description	Qty.
1	1024251	(008000–)	Pump, Hyd, Piston, Var, 1.24 4000, Cw (See Breakdowns)	1
2	44868	(008000–)	Fitting, Hyd, E90, Jm08/Om08	1
3	44869	(008000–)	Fitting, Hyd, Str, Jm08/Om08	1
4	53076	(008000–012314)	Fitting, Hyd, E90, Jm10/Om12	2
4	47655	(012315–)	Fitting, Hyd, E90, Jm08/Om12	2
5	39283	(008000–)	Screw, Hex, M10 X 1.50 X 25, 8.8	2
6	32485	(008000–)	Washer, Flat, 0.38 Sae	2
7	9007142	(008000–)	Pump Kit, Mtg, Aux, Ci [M20 & T20]	1
8	65145–1	(008000–)	Seal, Org, .069 X 3.06id	1
9	47513	(008000–)	Fitting, Hyd, E45, Jm08/Om10	2
10	67811	(008000–)	Fitting, Hyd, Str, Jm20/Om16	1
11	47512	(008000–)	Fitting, Hyd, E90, Jm06/Om08	1
12	54017	(008000–012314)	Fitting, Hyd, E45, Jf10/Jm10	1

Fig. 59 – Hydraulic Cooler and Tubes Group

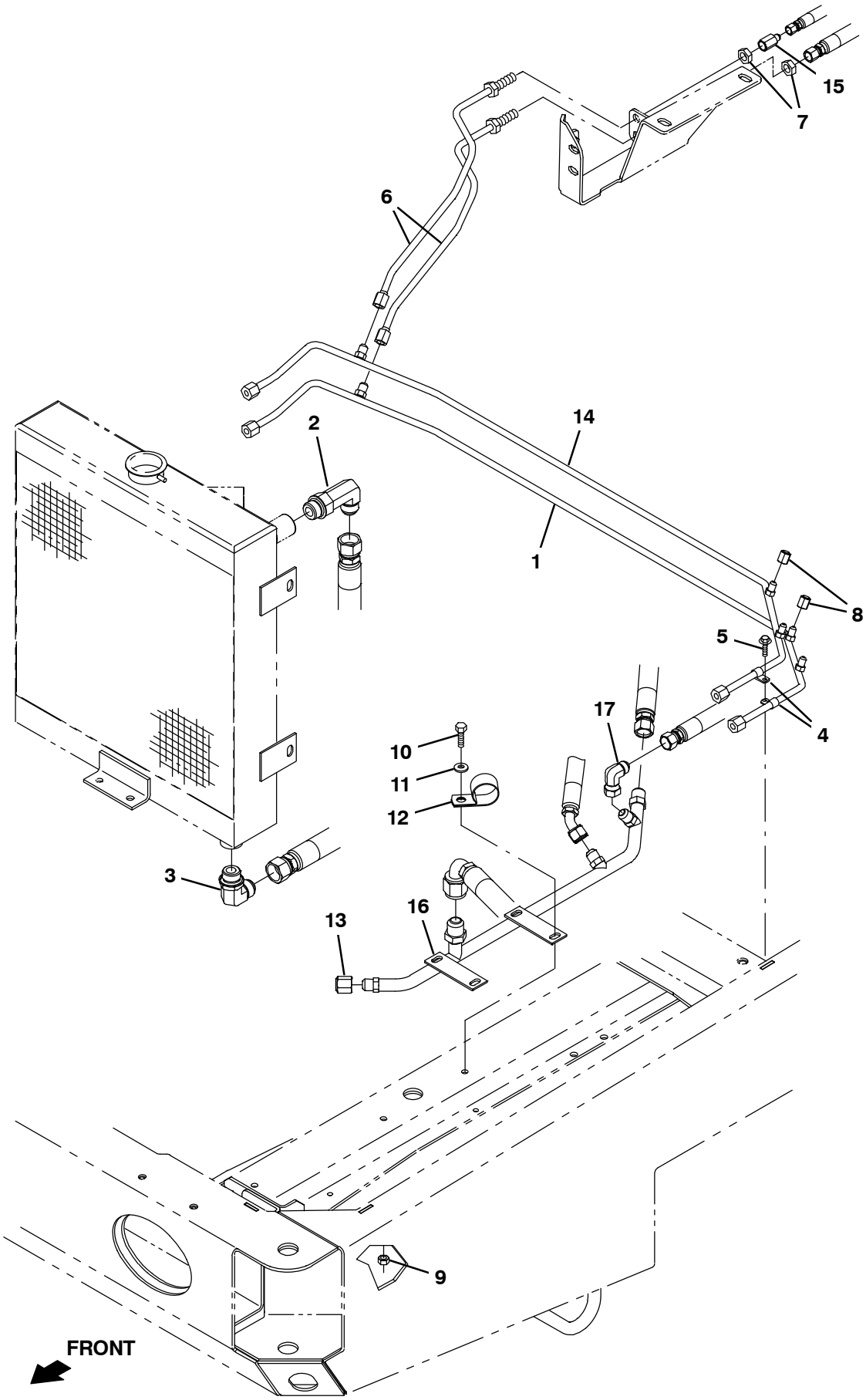

354455

Fig. 59 – Hydraulic Cooler and Tubes Group

Ref.	Part No.	Serial Number	Description	Qty.
1	1028822	(008000–)	Tube, Hyd, Sqge	1
2	46481	(008000–)	Fitting, Hyd, E90, Jm12/Om12	1
3	62471	(008000–)	Fitting, Hyd, E90, Jm12/Om12, L	1
4	40678	(008000–)	Clamp, Cable, Stl, 0.44d X 0.62w, 1h	2
5	74455	(008000–)	Screw, Hex, M6 X 1.0 X 12, Fmg	1
6	1028823	(008000–)	Tube, Hyd, Rear Sqge [M20]	2
7	35904	(008000–)	Nut, Ftg, Hyd, 0.56–18	2
8	50161	(008000–)	Fitting, Hyd, Cap, Jf04	2
9	41430	(008000–)	Nut, Hex, Lock, M10 X 1.5, Nl	2
10	39277	(008000–)	Screw, Hex, M8 X 1.25 X 25, 8.8	2
11	32491	(008000–)	Washer, Flat, 0.31, Std	2
12	53466	(008000–)	Clamp, Cable, Stl, 1.50d X 1.00w, 1h	1
13	60090	(008000–)	Fitting, Hyd, Cap, Jf08	1
14	1028821	(008000–)	Tube, Hyd, Sqge	1
15	47752	(008000–)	Fitting, Hyd, Str, Jf06/Jm04	1
16	1071173	(008000–)	Tube, Hyd, Main Return [G/Lp Mit2013]	1
17	17980	(008000–)	Fitting, Hyd, E90, Jf08/Jm08	1

Fig. 60 – Hydraulic Reservoir Group

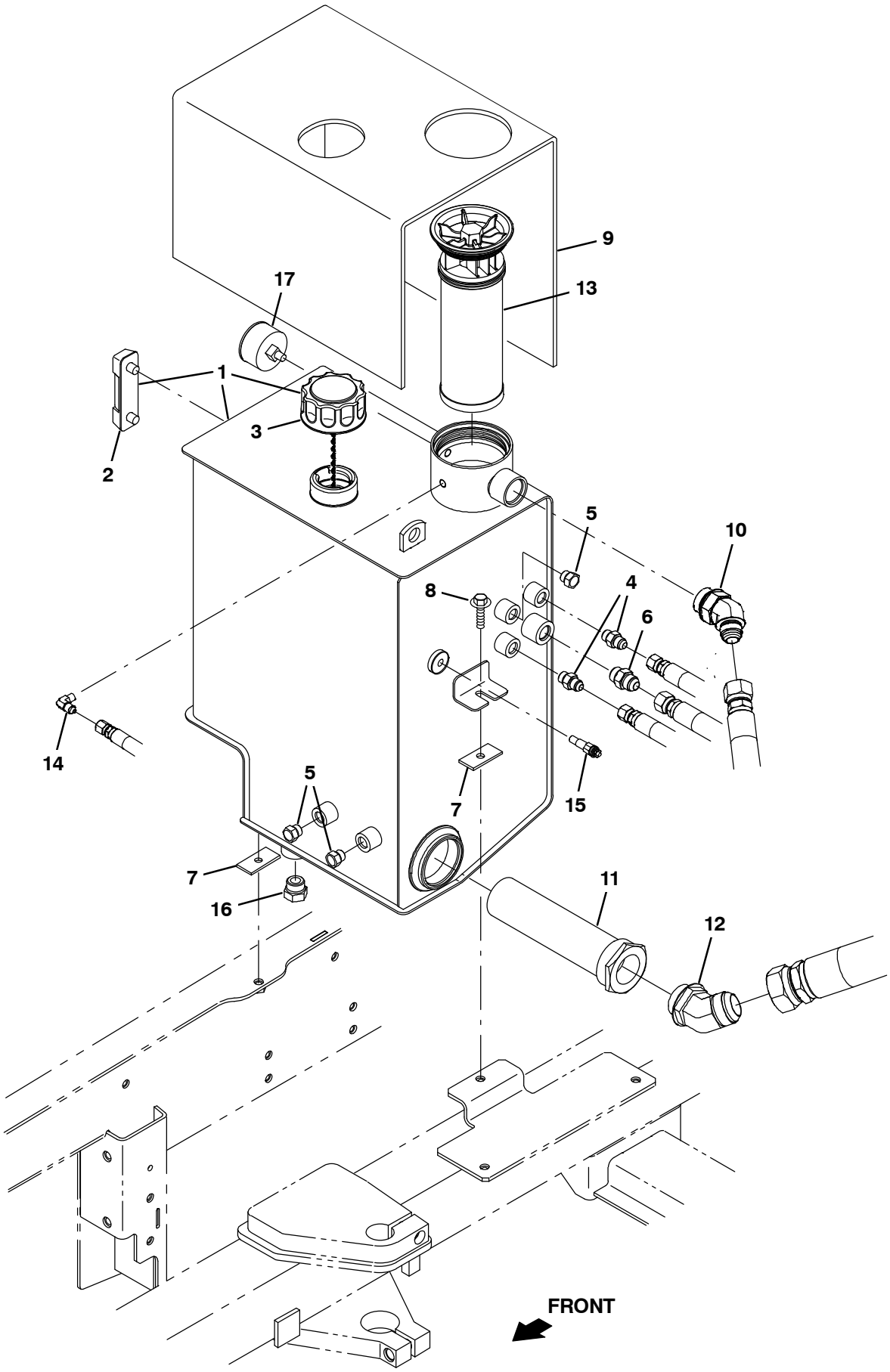

354456 – NA

Fig. 60 – Hydraulic Reservoir Group

	Ref.	Part No.	Serial Number	Description	Qty.
▽	1	9002398	(008000–)	Reservoir, Hyd, 10.0Gal, Replmt	1
▲	2	65215	(008000–)	Gauge, Sensing, Level	1
▲	3	1018289	(008000–)	Cap, Breather, Hyd, W Chain	1
	4	56690	(008000–)	Fitting, Hyd, Str, Jm06/Om06	2
	5	46482	(008000–)	Fitting, Hyd, Plug, Om06	3
	6	44869	(008000–)	Fitting, Hyd, Str, Jm08/Om08	1
	7	1040318	(008000–)	Pad, Tank, Hyd [W/Psa]	2
	8	1037354	(008000–)	Screw, Hex, M8 X 1.25 X 30, 9.8, Sems	2
	9	1034878	(008000–)	Insulation, Thermal, Hydraulic Blanket	1
	10	1023545	(008000–)	Fitting, Hyd, E45, Jm12/Om16	1
	11	31613	(008000–)	Strainer, Hyd, 25gpm 100mesh Psi	1
	12	71726	(008000–)	Fitting, Hyd, E45, Jm20/Om20	1
	13	1021579	(008000–)	Filter Assy, Hyd, 10mic	1
	14	55455	(008000–)	Fitting, Hyd, E90, Jm04/Pm02	1
	15	58592	(008000–)	Send–Unit, Water, Temp, 04npt 113oh/195d	1
	16	40362	(008000–)	Fitting, Hyd, Plug, Om10	1
	17	1025132	(008000–)	Indicator, Press, 60psi	1

Fig. 61 – Hydraulic Valve Group

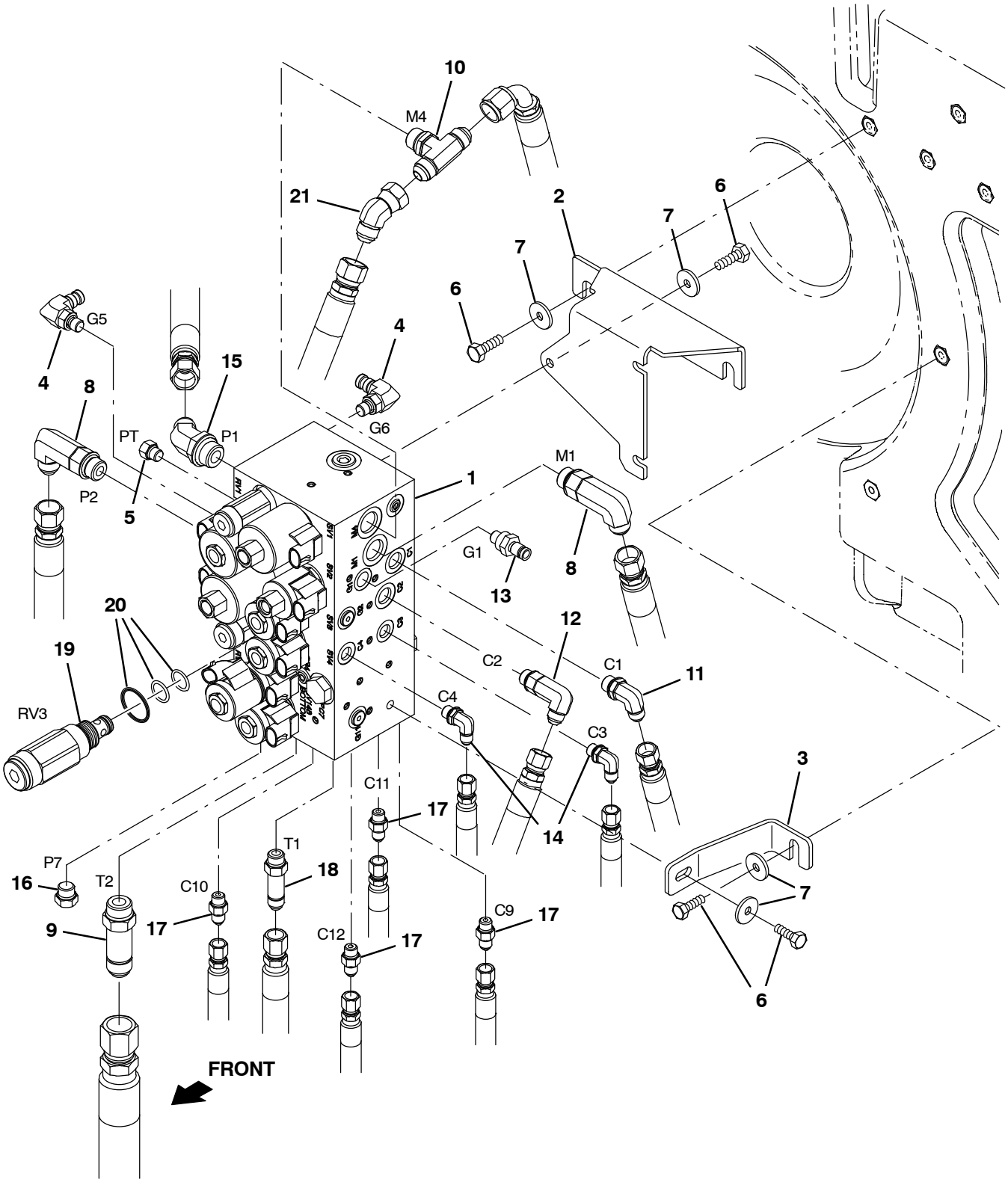

354816 – M20

Fig. 61 – Hydraulic Valve Group

	Ref.	Part No.	Serial Number	Description	Qty.
	1	1072995	(008000–)	Valve, Cntrl, Hyd, Solenoid, 12vdc 10gpm (See Breakdowns)	1
	2	1039789	(008000–)	Bracket, Mtg, Valve [Combined]	1
	3	1040117	(008000–)	Bracket, Mtg, Valve, Lower	1
	4	395974	(008000–)	Fitting, Hyd, E90, Om04/Qm04	2
	5	33812	(008000–)	Fitting, Hyd, Plug, Om04	1
	6	09740	(008000–)	Screw, Hex, M8 X 1.25 X 20, Ss	8
	7	1017218	(008000–)	Washer, Flat, 0.32b 1.00d .12, Ss	8
	8	69173	(008000–)	Fitting, Hyd, E90, Jm08/Om08, Long	2
	9	1040876	(008000–)	Fitting, Hyd, Str, Jm10/Om10, Long	1
	10	49933	(008000–)	Fitting, Hyd, Tee, Jm08/Jm08/Om08, Br	1
	11	56820	(008000–)	Fitting, Hyd, E90, Jm06/Om06	1
	12	71727	(008000–)	Fitting, Hyd, E90, Jm06/Om06, Long	1
	13	395973	(008000–)	Fitting, Hyd, Str, Om04/Qm04	1
	14	77097	(008000–)	Fitting, Hyd, E90, Jm04/Om04	2
	15	42226	(008000–)	Fitting, Hyd, E45, Jm08/Om08	1
	16	46482	(008000–)	Fitting, Hyd, Plug, Om06	1
	17	55586	(008000–)	Fitting, Hyd, Str, Jm04/Om04	4
	18	59577	(008000–)	Fitting, Hyd, Str, Jm06/Om06, Long	1
▽	19	1044367	(008000–)	Valve, Relief, 0600Psi	1
▲	20	373647	(008000–)	Seal Kit, Cartridge	1
	21	07797	(008000–)	Fitting, Hyd, E45, Jf08/Jm08	1

Fig. 62 - Electrical Schematic (008000-014000)

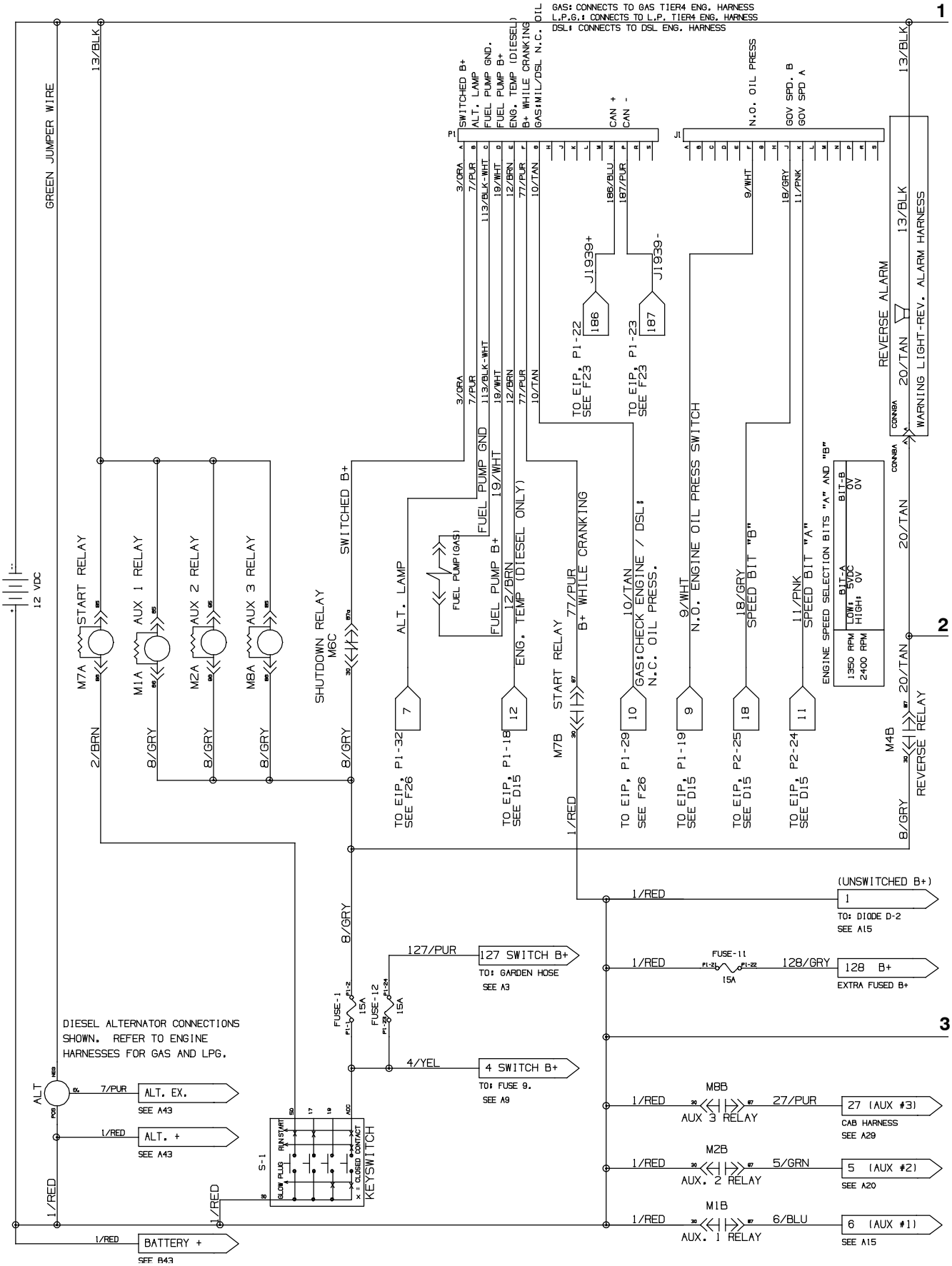

1075420 - 356680

Fig. 62 - Electrical Schematic (008000-014000)

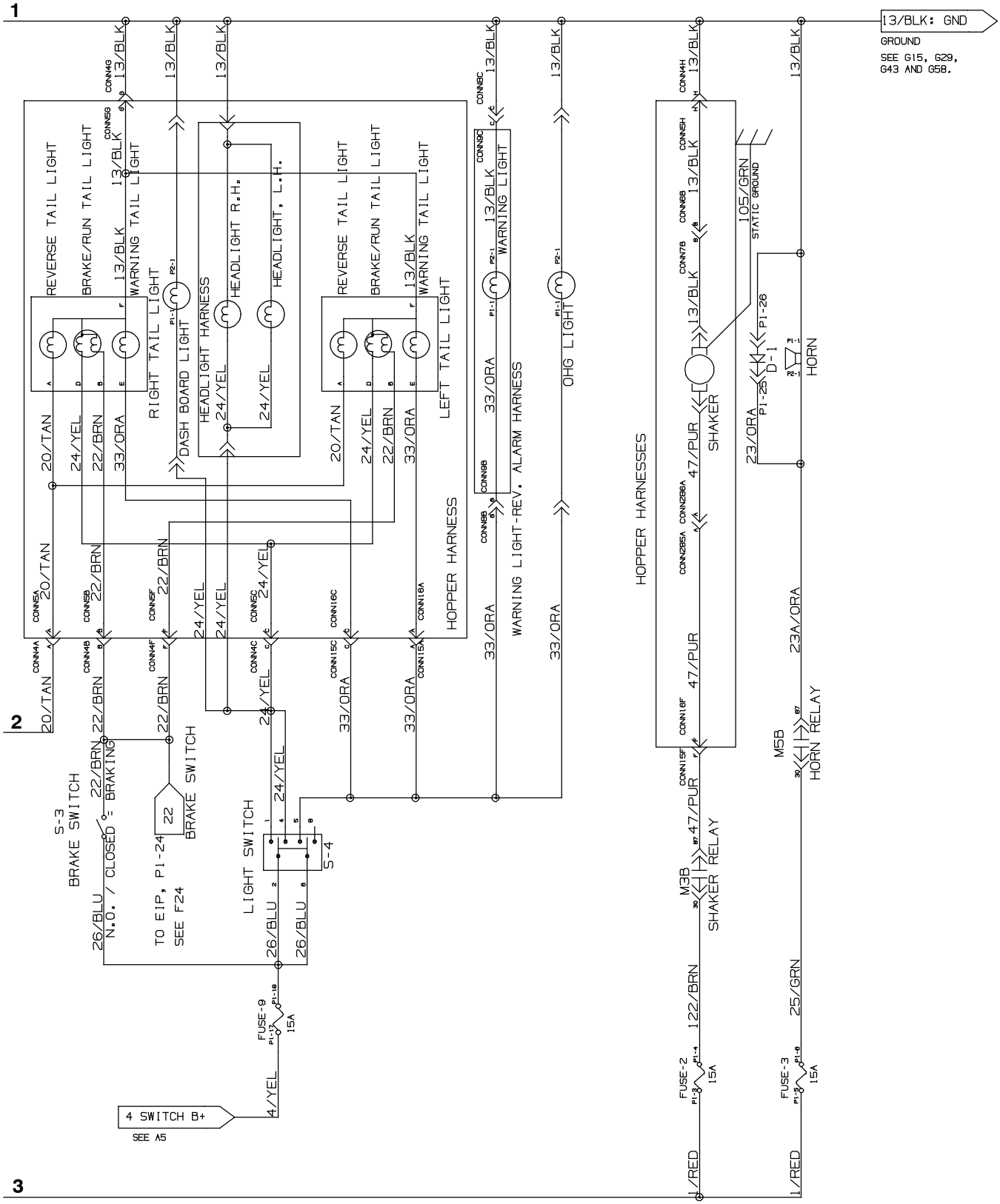

1075420 - 356680

Fig. 62 - Electrical Schematic (008000-014000)

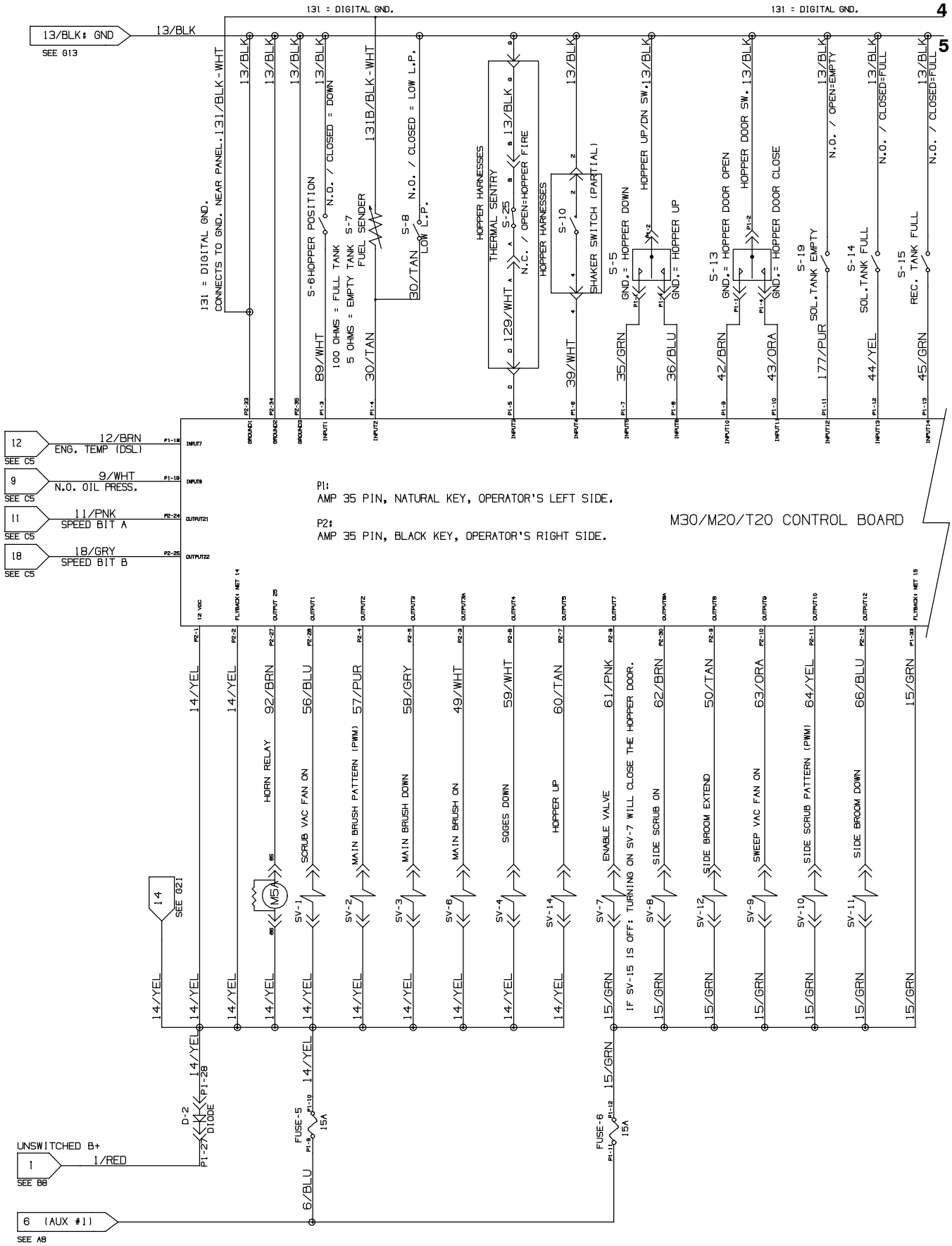

1075420 - 356680

Fig. 62 - Electrical Schematic (008000-014000)

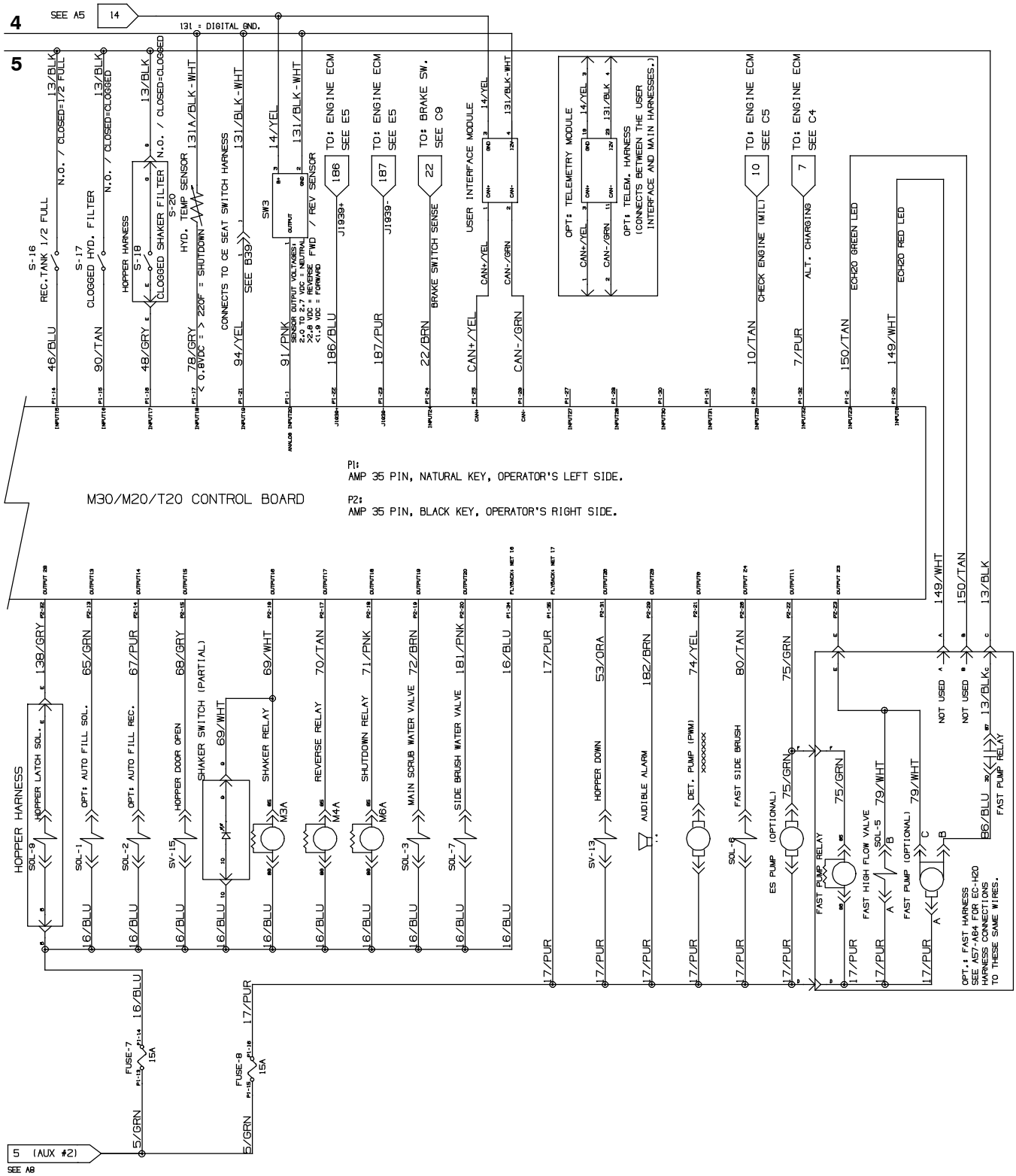

1075420 - 356680

Fig. 62 - Electrical Schematic (008000-014000)

OPT: EC-H2O SYSTEM

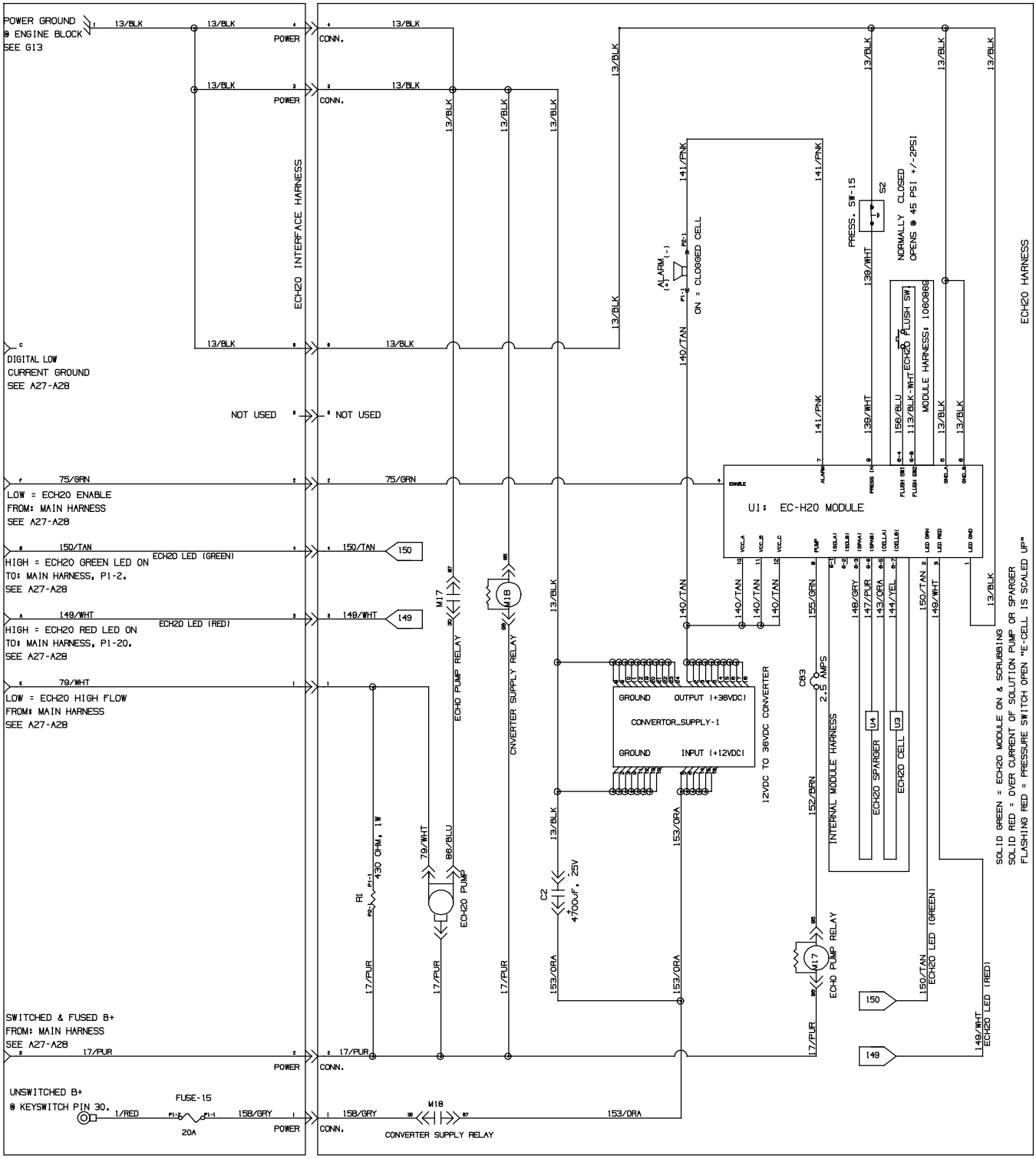

1075420 - 356680

Fig. 62 - Electrical Schematic (008000-014000)

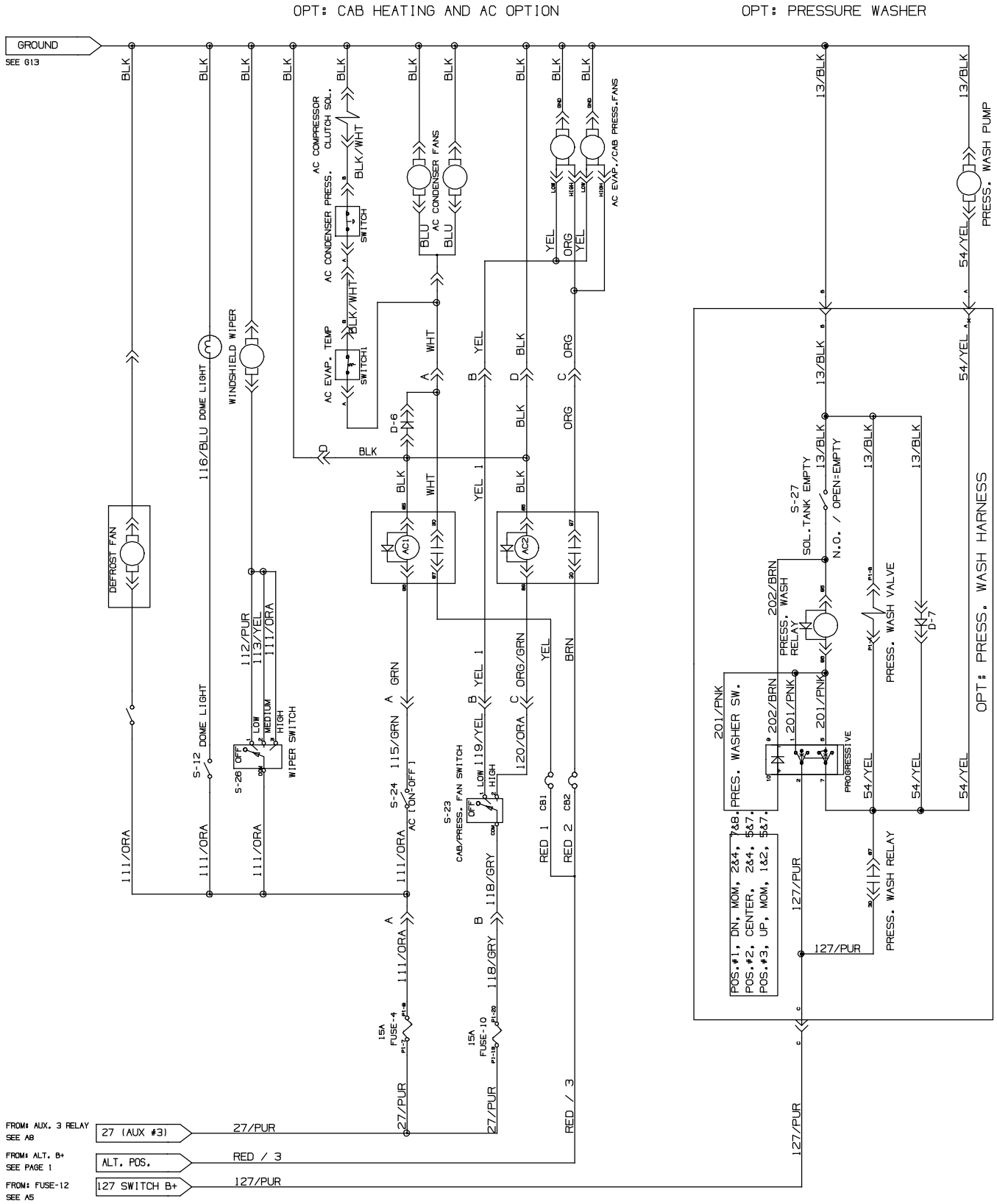

1075420 - 356680

Fig. 62 - Electrical Schematic (008000-014000)

OPT: SPRAY NOZZLE

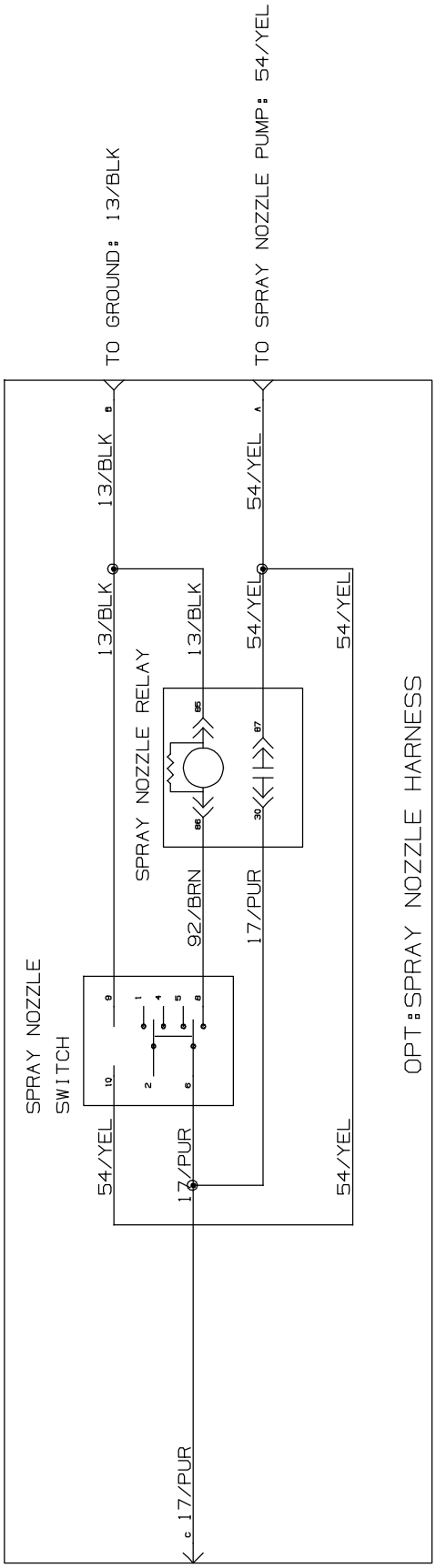

1075420 - 356680

Fig. 63 - Electrical Schematic (014001-)

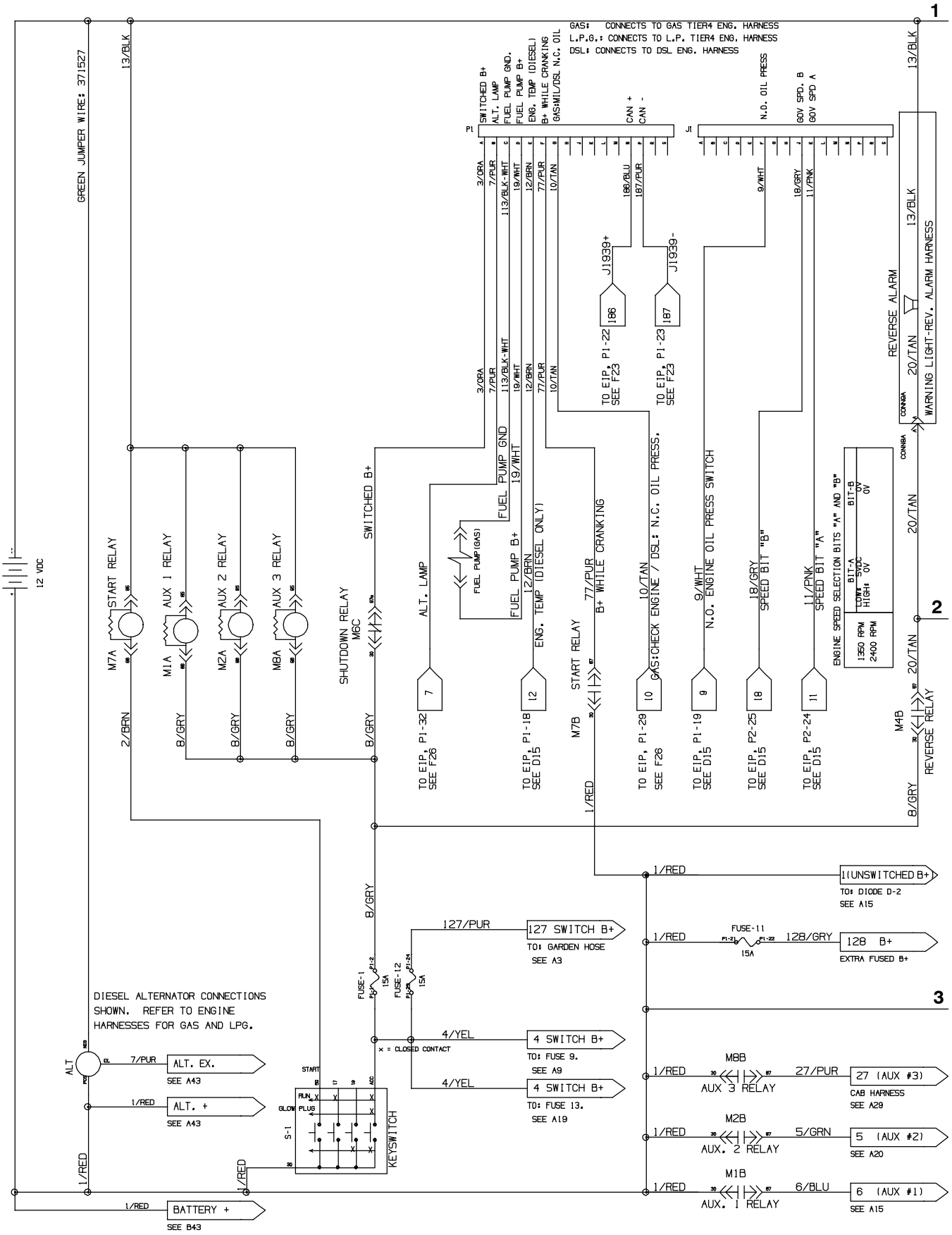

1075420 - 356680

Fig. 62 - Electrical Schematic (014001-)

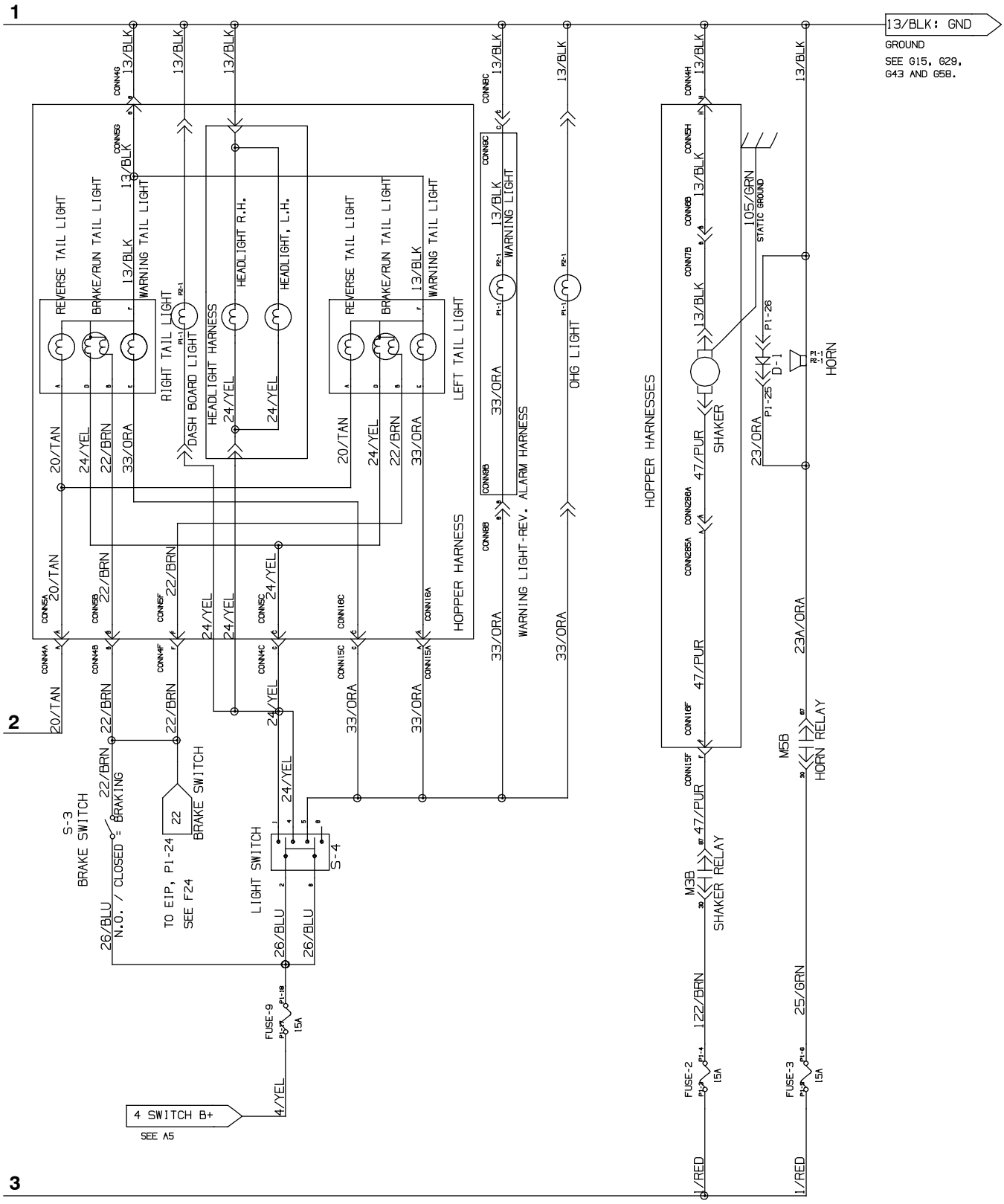

1075420 - 356680

Fig. 62 - Electrical Schematic (014001-)

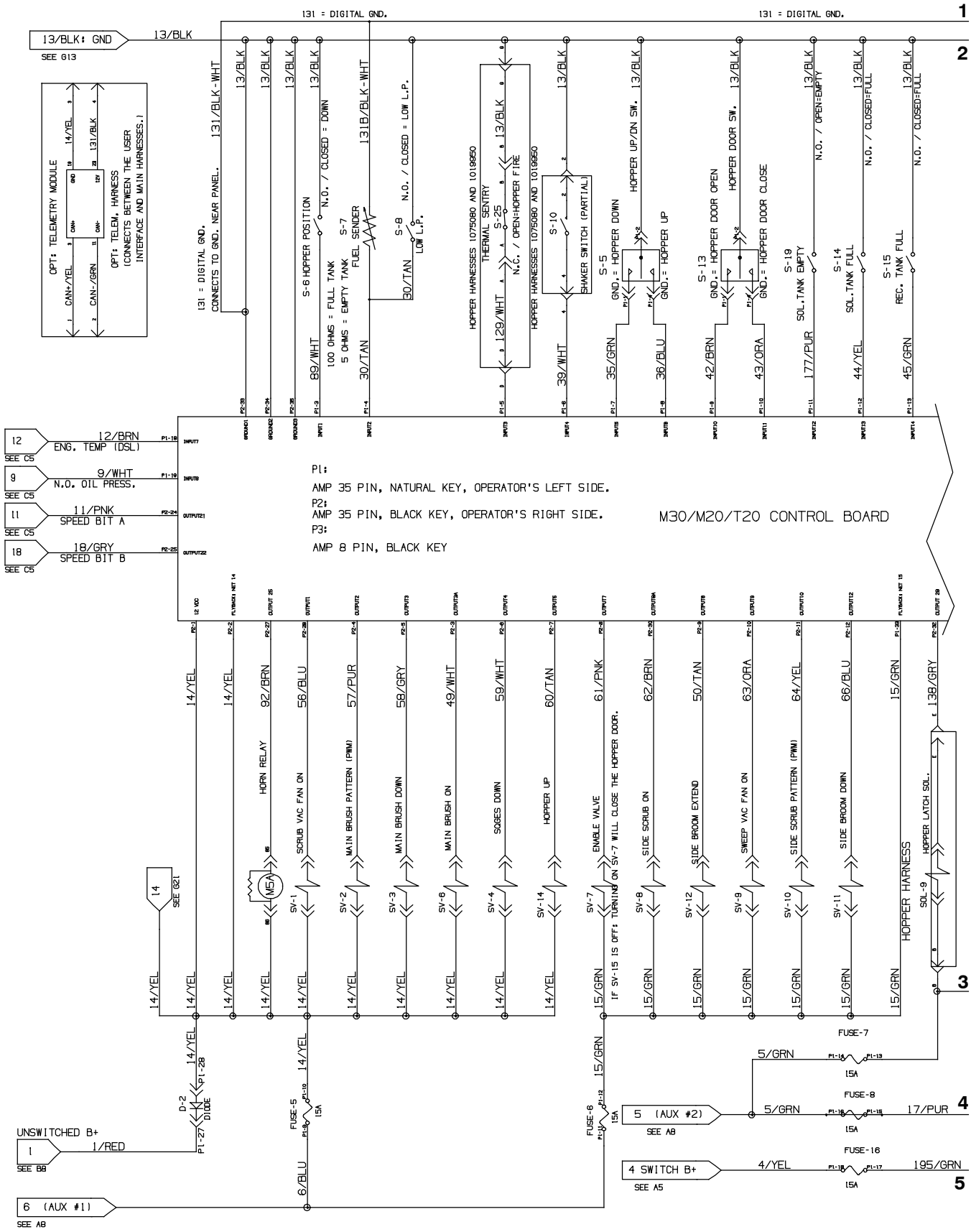

1075420 - 356680

Fig. 62 - Electrical Schematic (014001-)

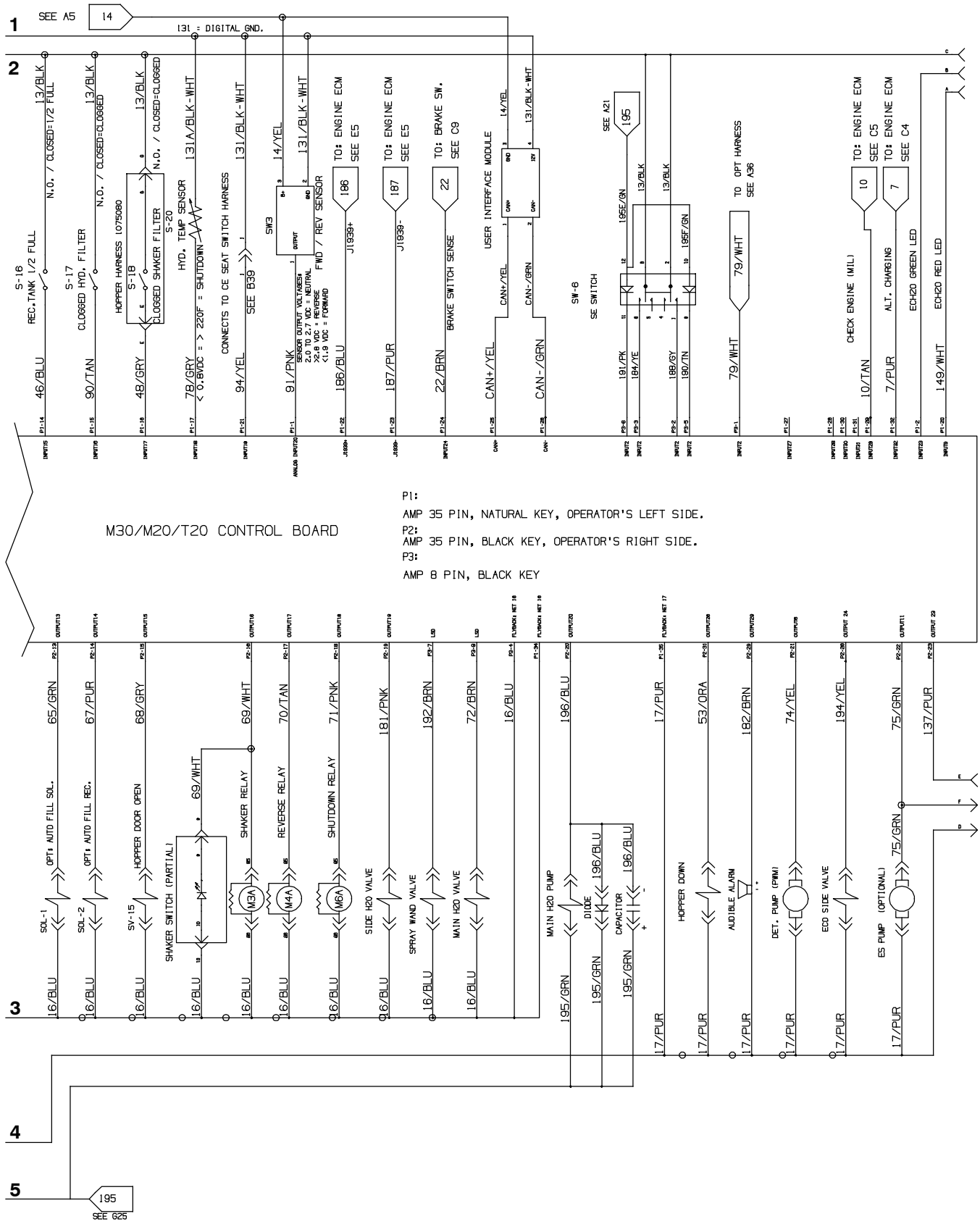

1075420 - 356680

Fig. 62 - Electrical Schematic (014001-)

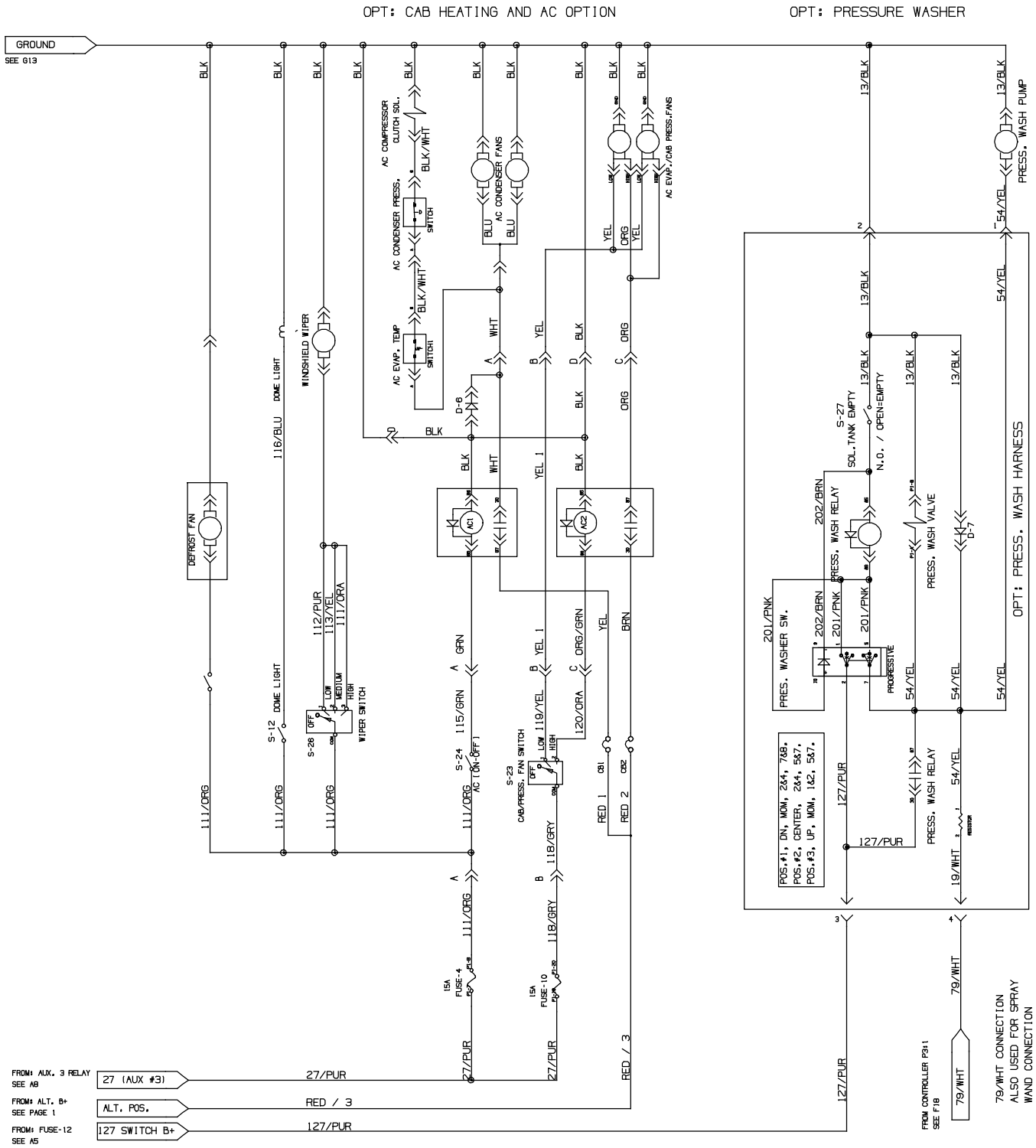

1075420 - 356680

Fig. 62 - Electrical Schematic (014001-)

OPT: SPRAY NOZZLE

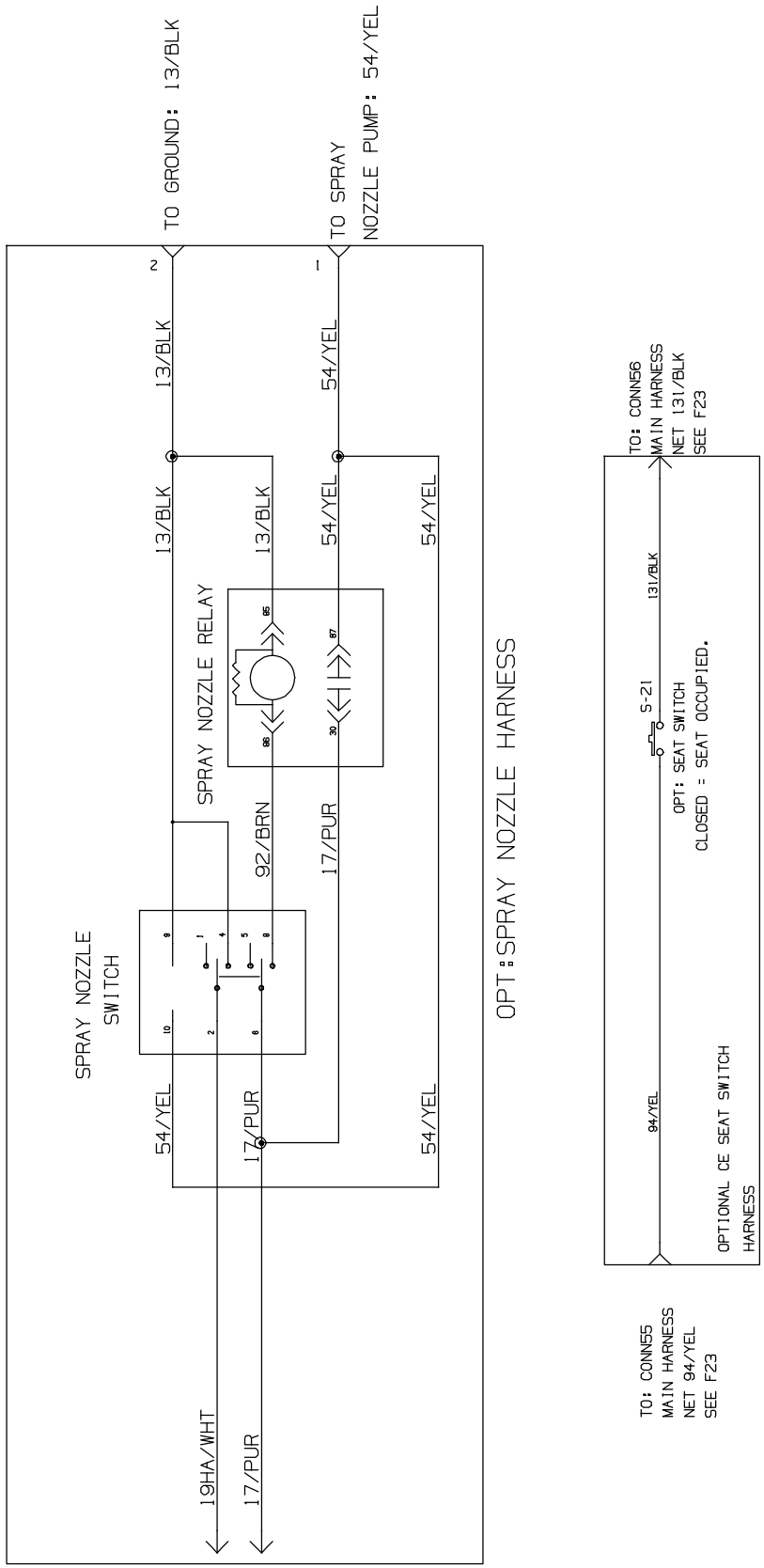

1075420 - 356680

Fig. 62 - Electrical Schematic (014001-)

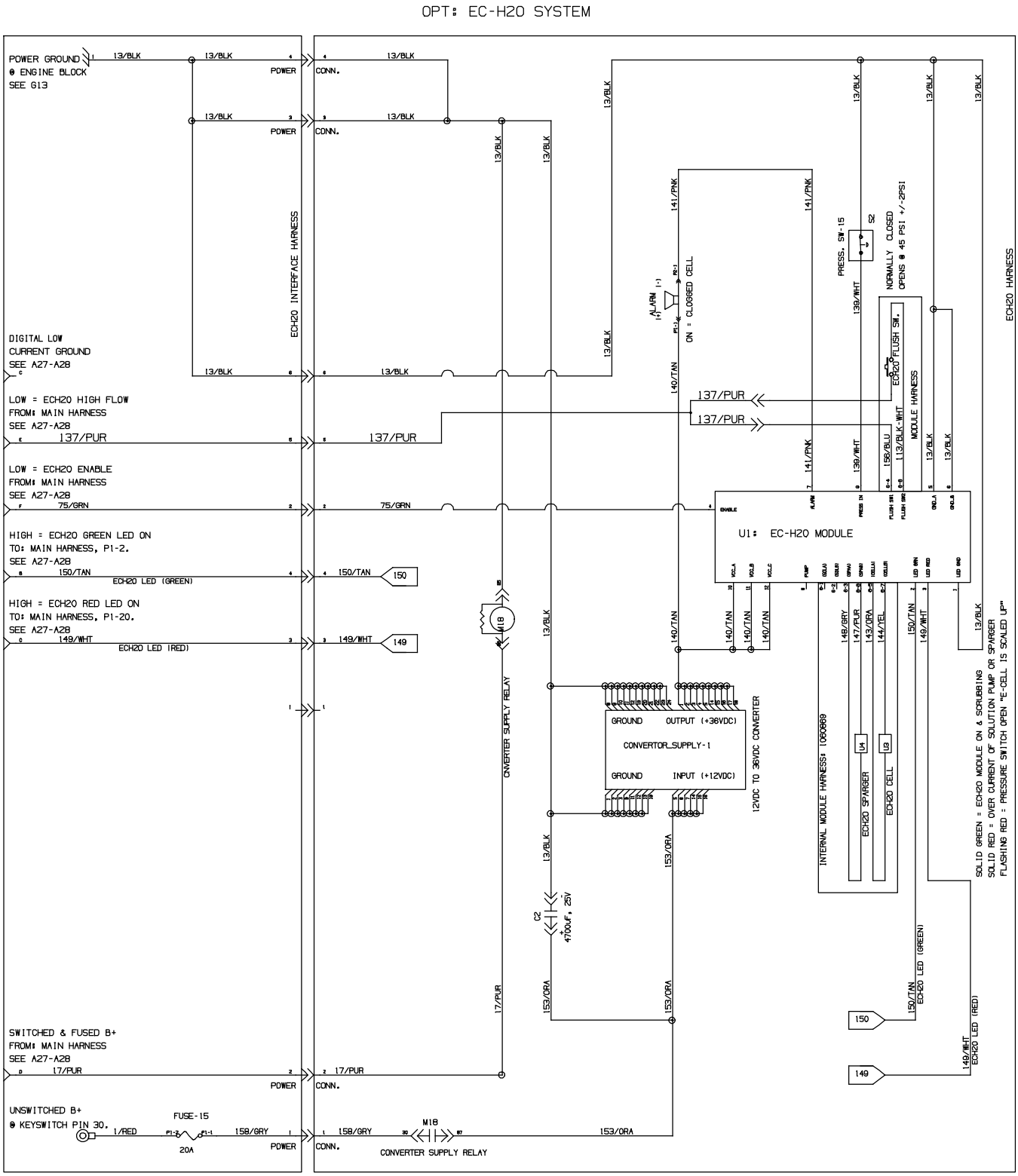

1075420 - 356680

Fig. 64 - Electrical Schematic, Gas Engine Harness

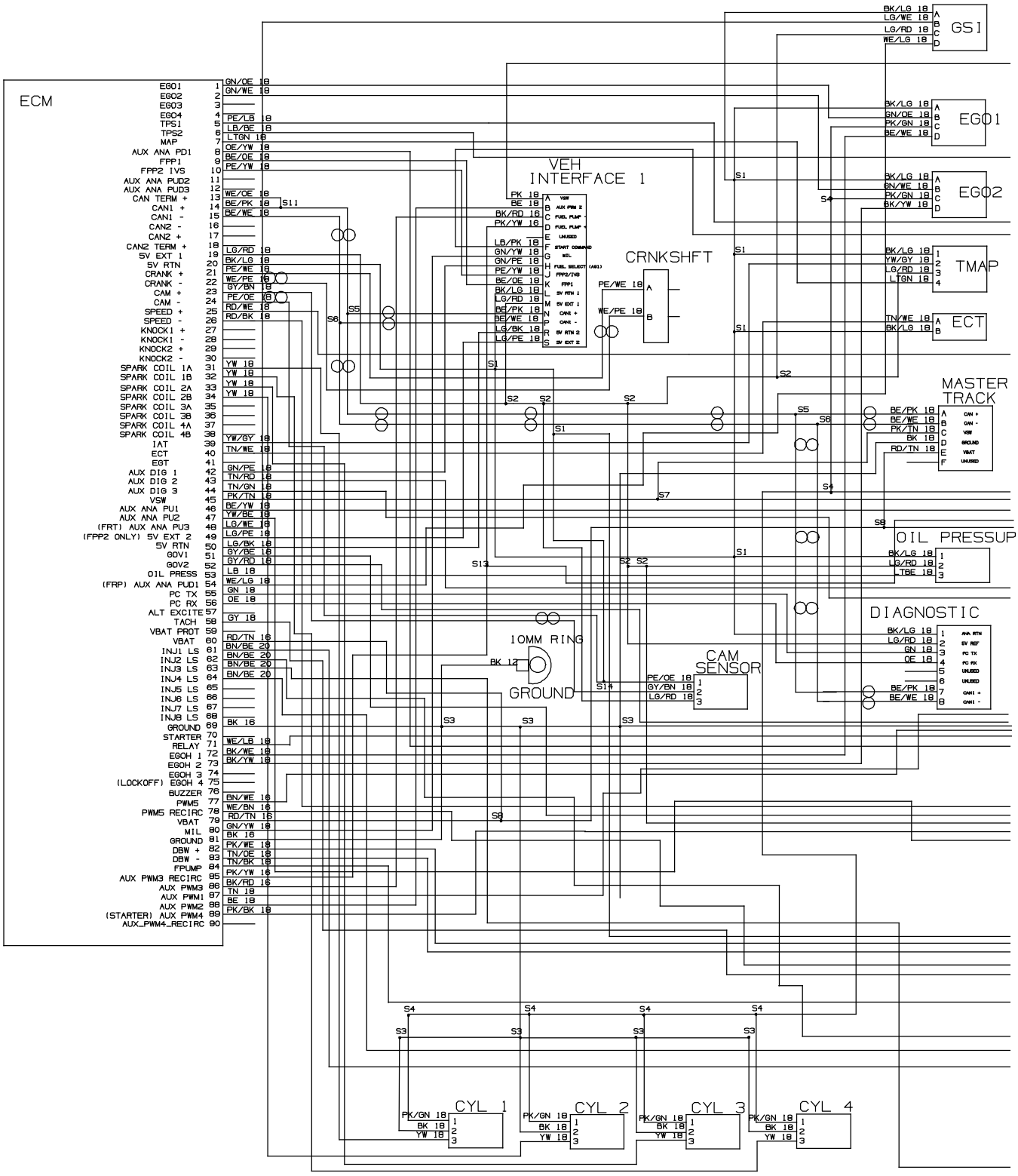

1071653- 356303

Fig. 64 - Electrical Schematic, Gas Engine Harness

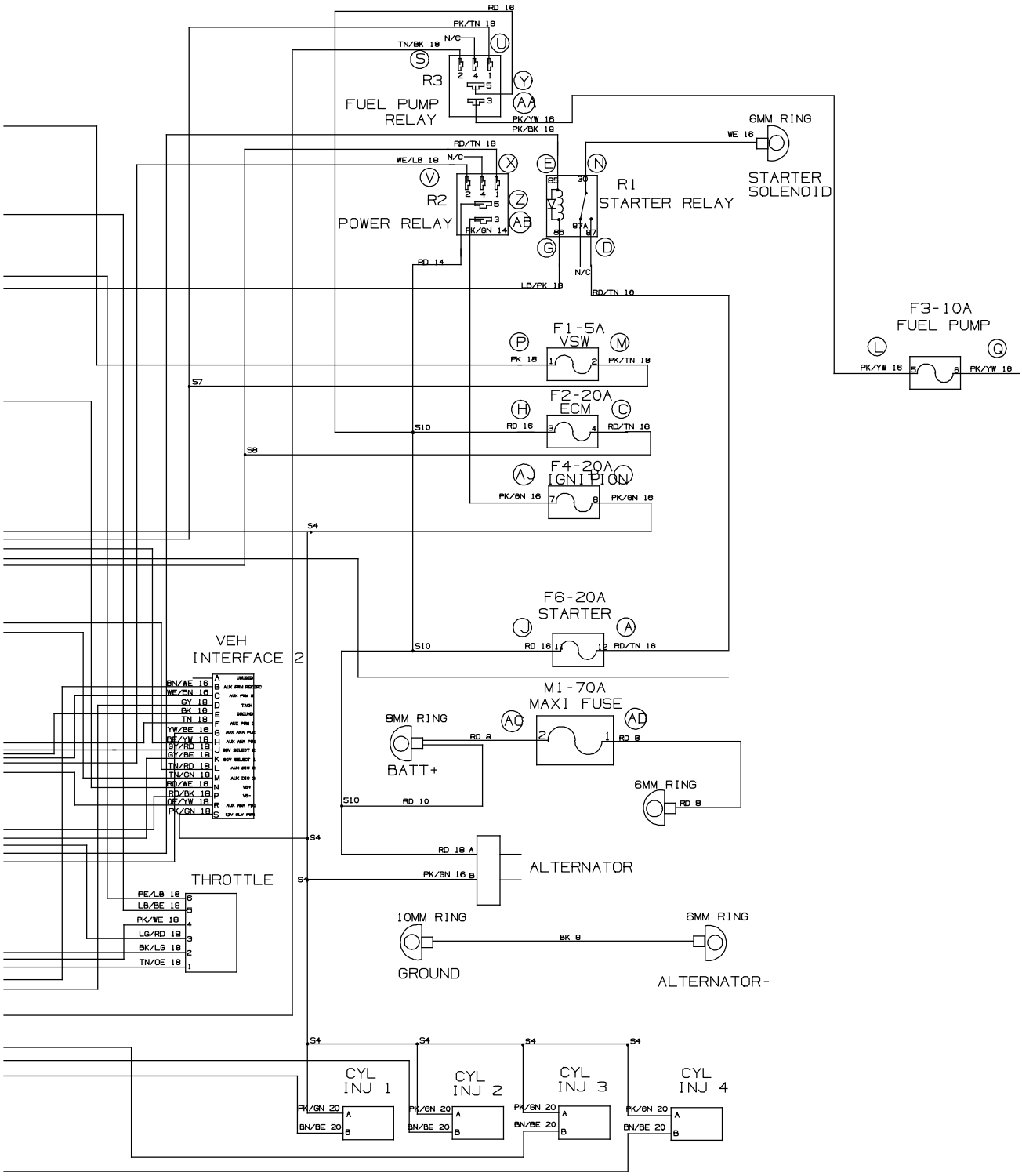

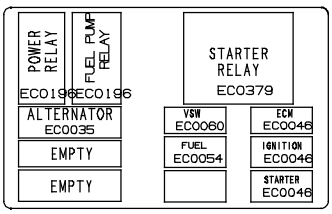

LOADING VIEW

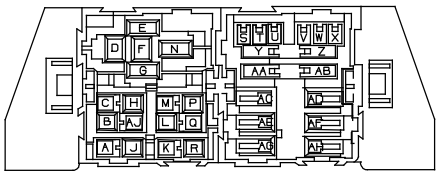

CB0186
WIRE INSERTION VIEW

1071653- 356303

Fig. 65 - Electrical Schematic, LPG Engine Harness

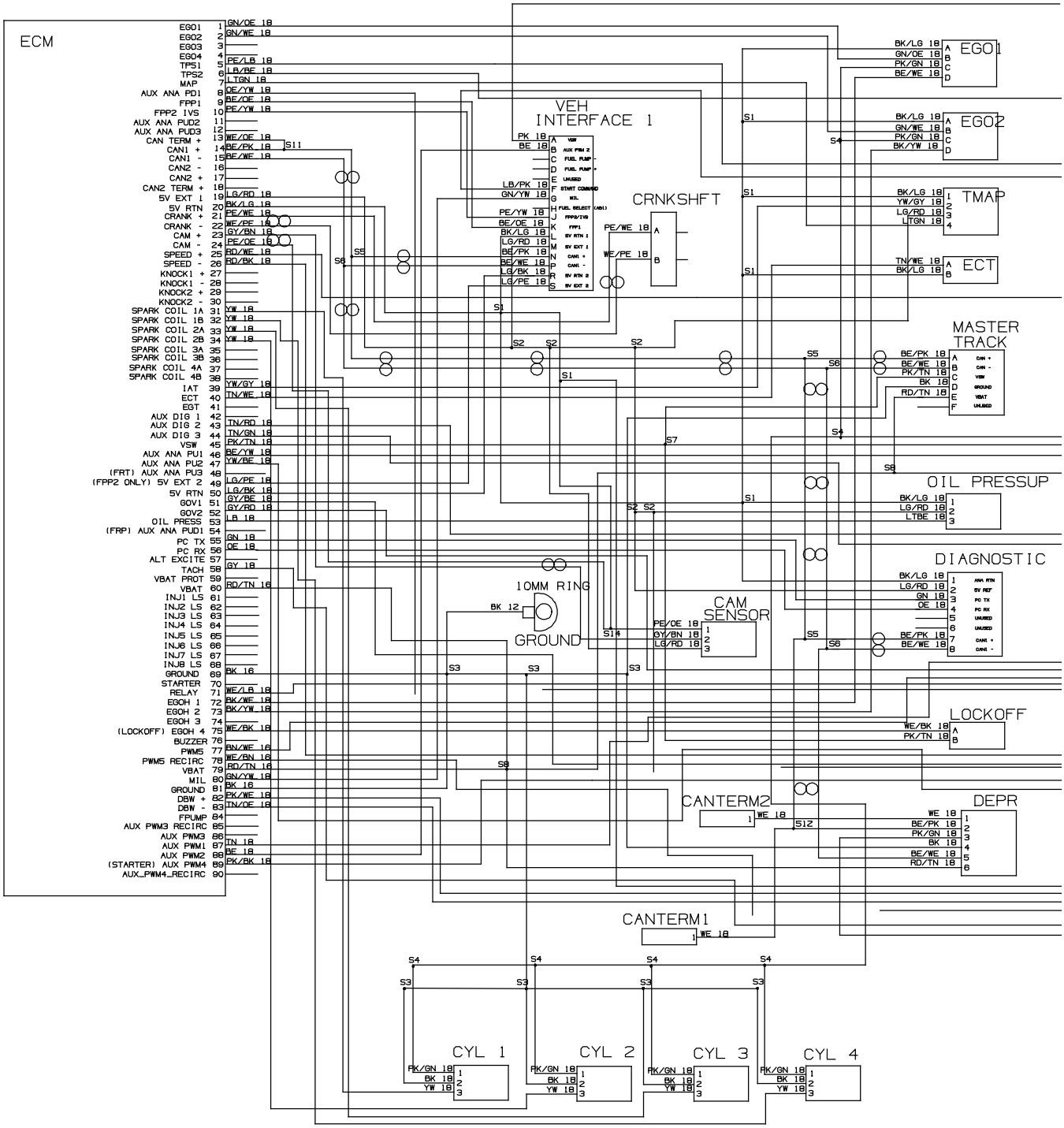

1071654- 356304

Fig. 65 - Electrical Schematic, LPG Engine Harness

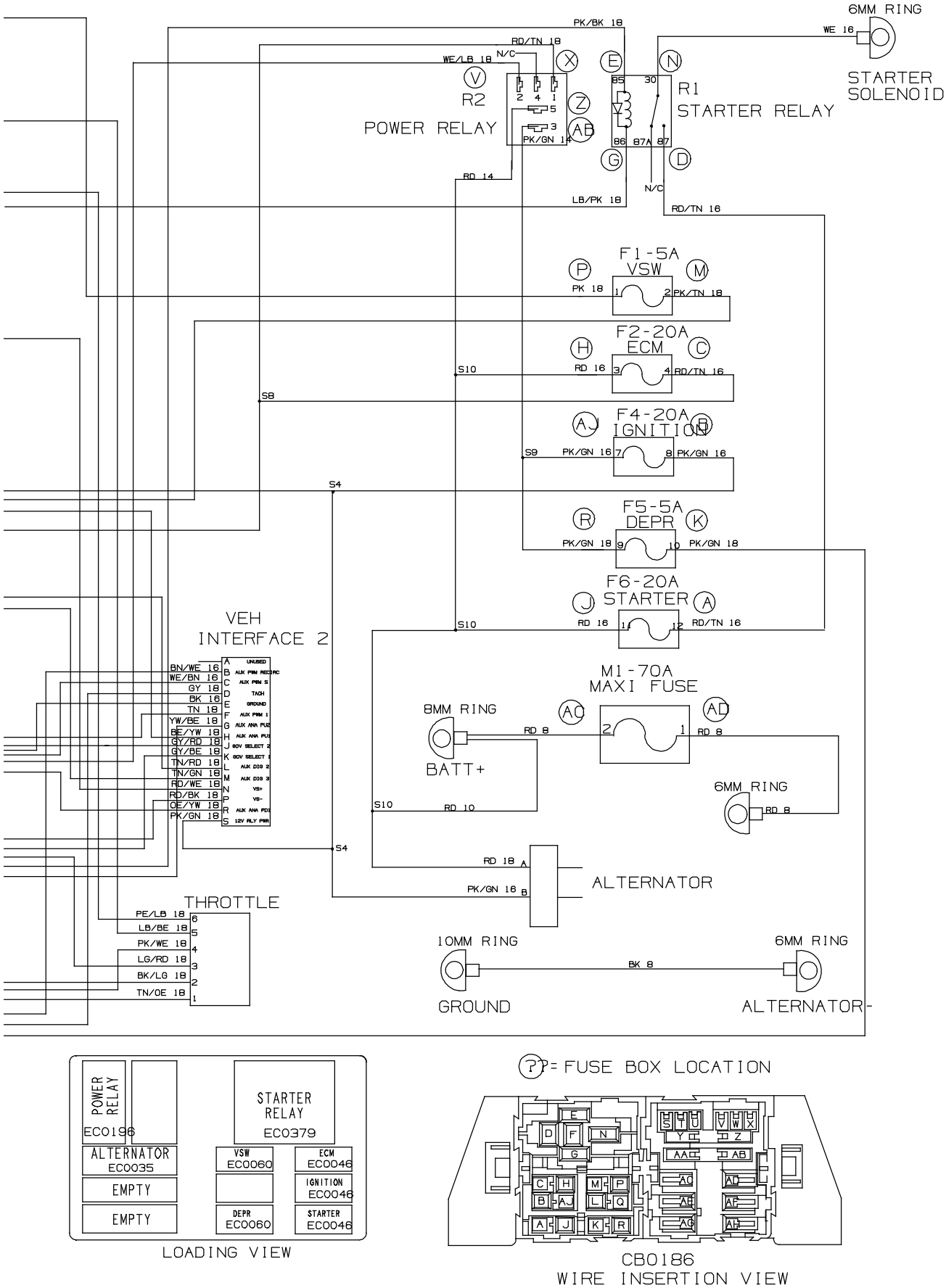

1071654- 356304

Fig. 66 - Electrical Wire Harness Group, Main (008000-014000)

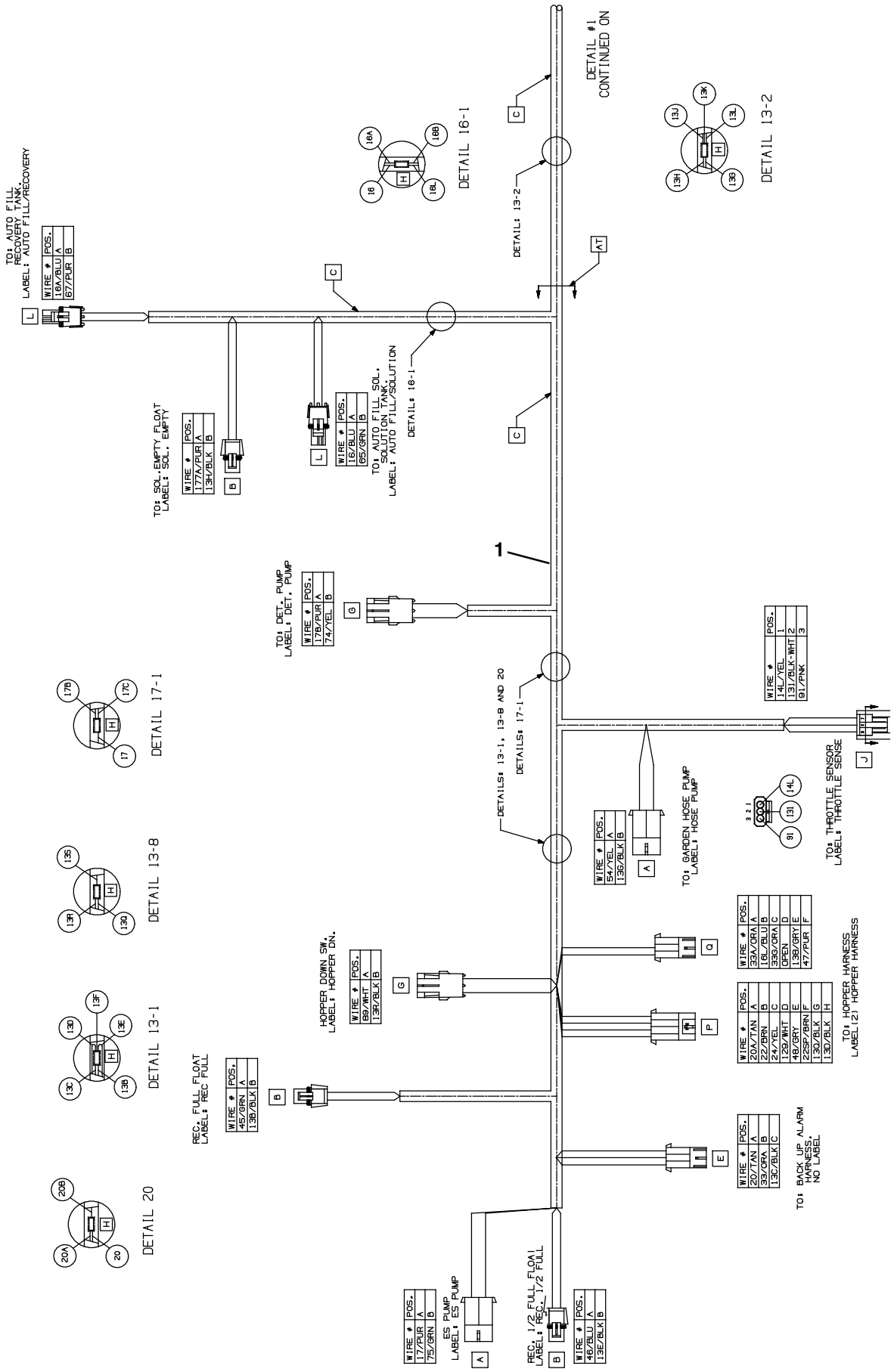

Fig. 66 - Electrical Wire Harness Group, Main (008000-014000)

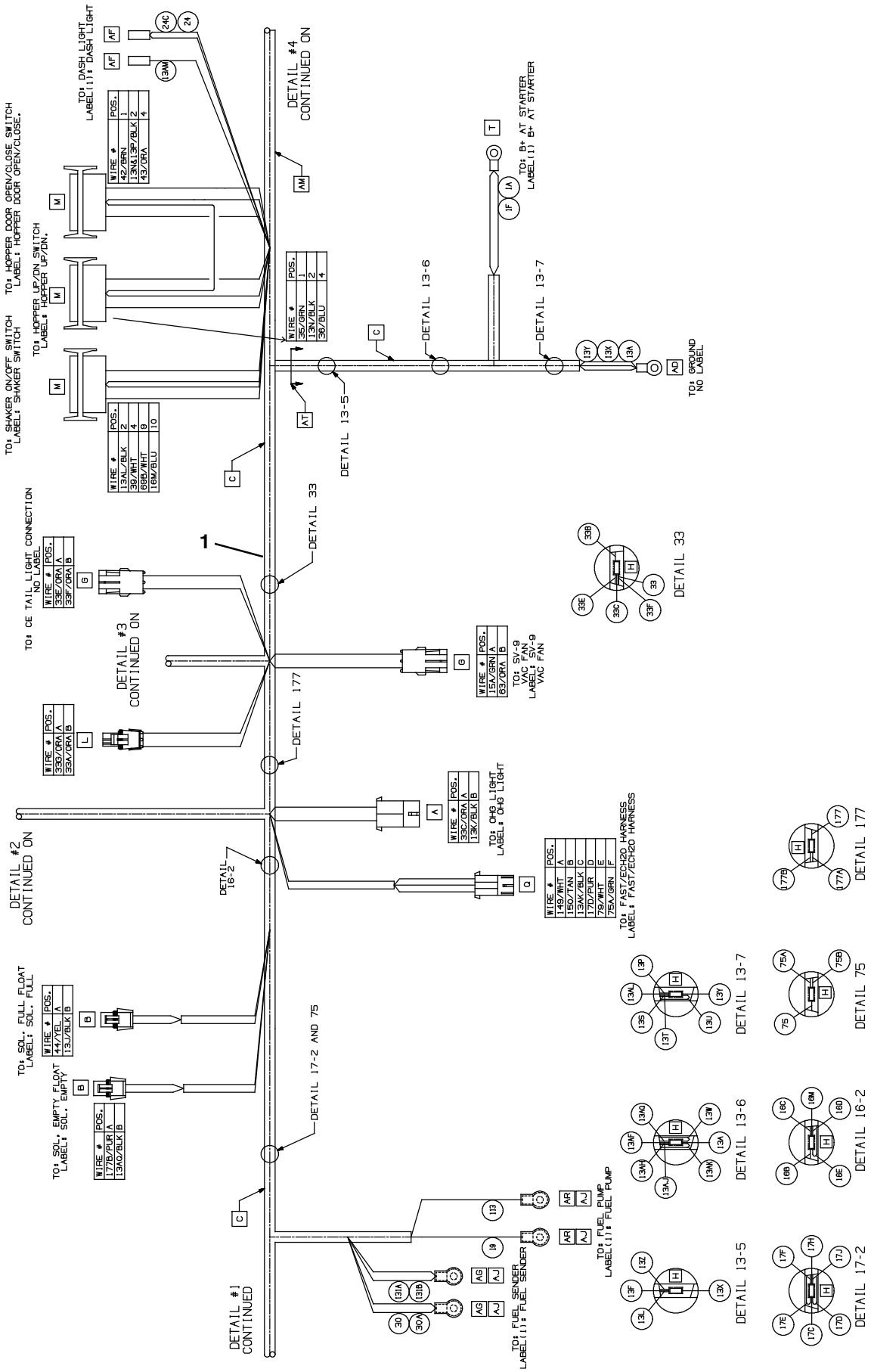

Fig. 66 - Electrical Wire Harness Group, Main (008000-014000)

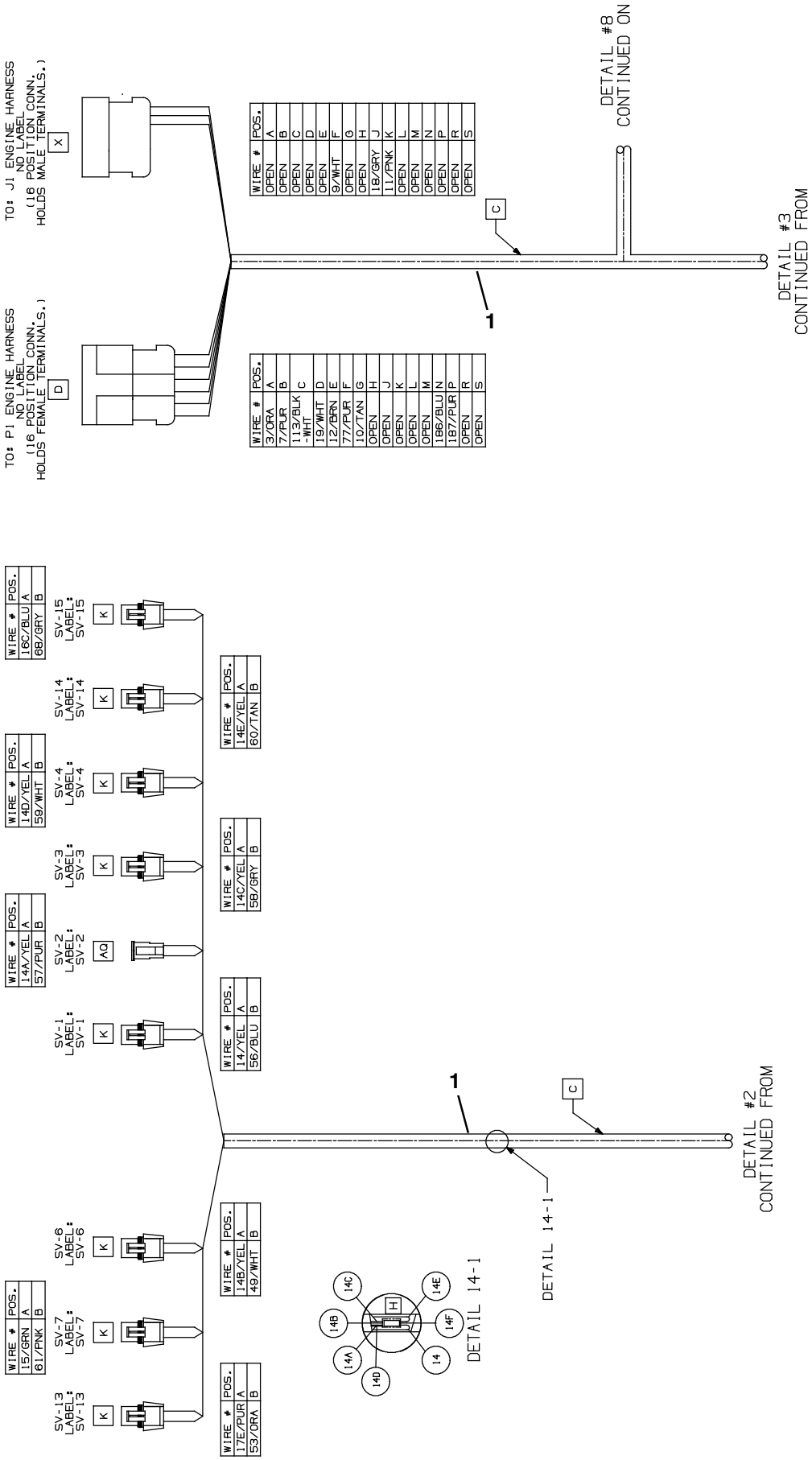

Fig. 66 - Electrical Wire Harness Group, Main (008000-014000)

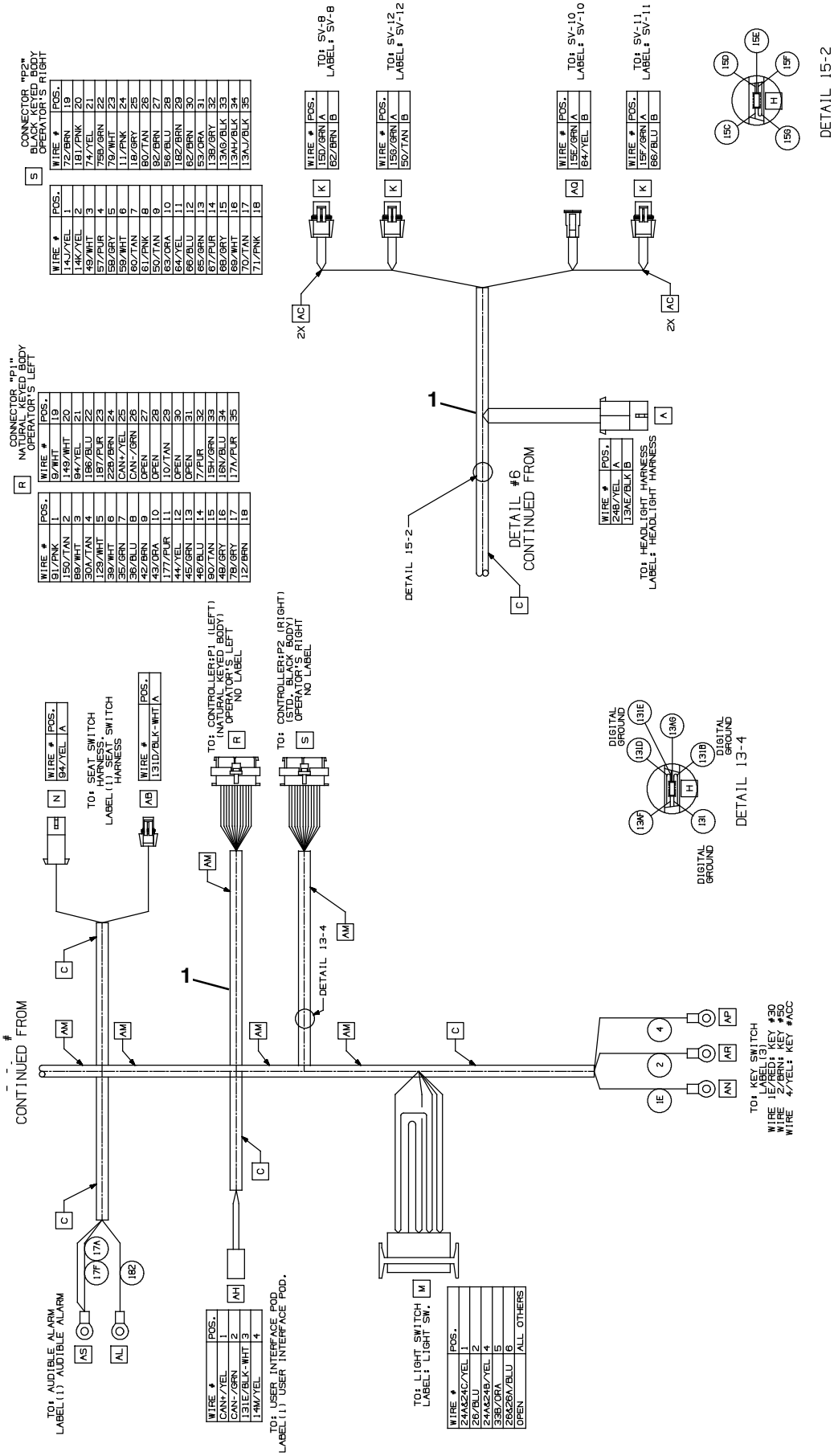

Fig. 66 - Electrical Wire Harness Group, Main (008000-014000)

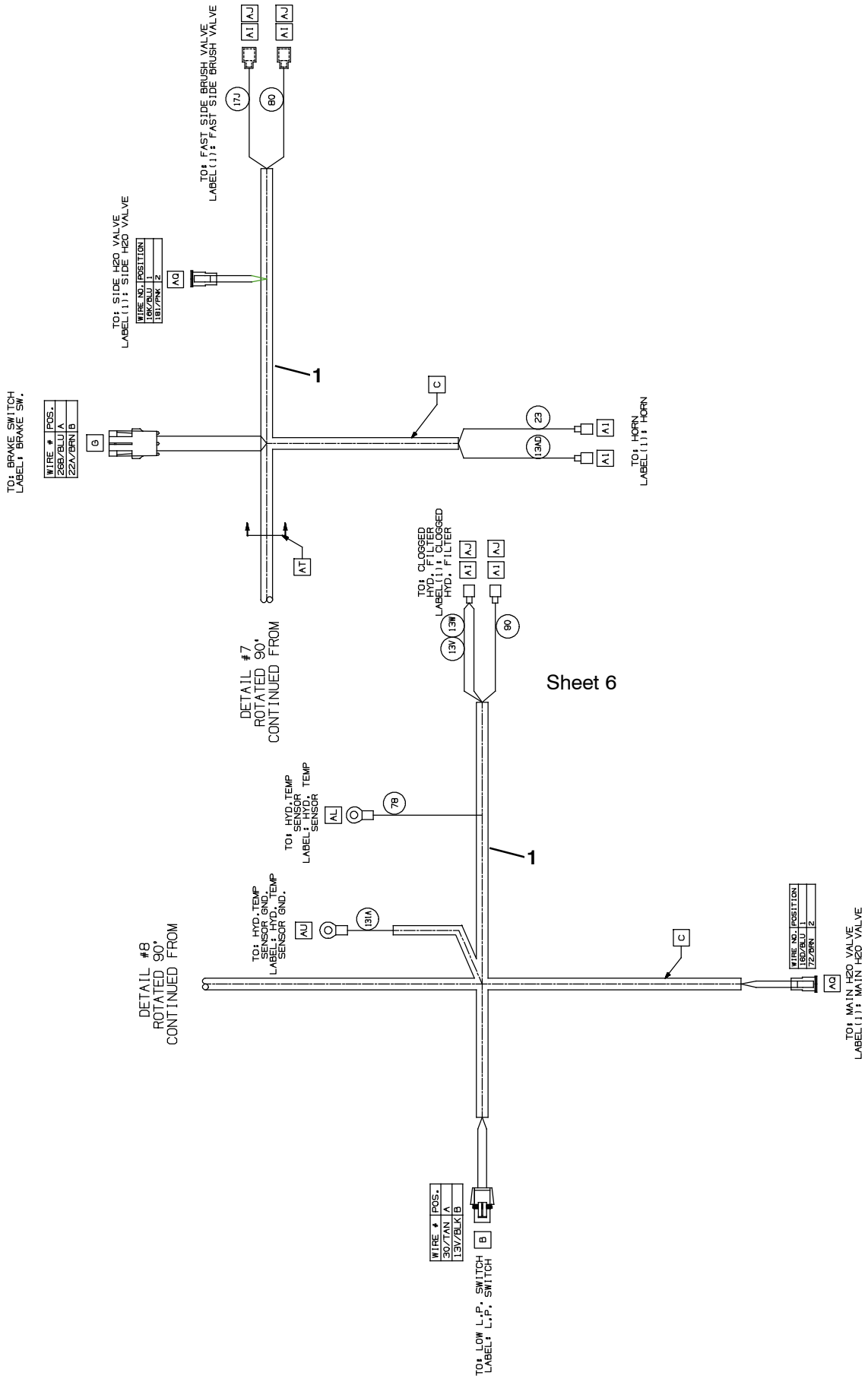

Fig. 66 - Electrical Wire Harness Group, Main (008000-014000)

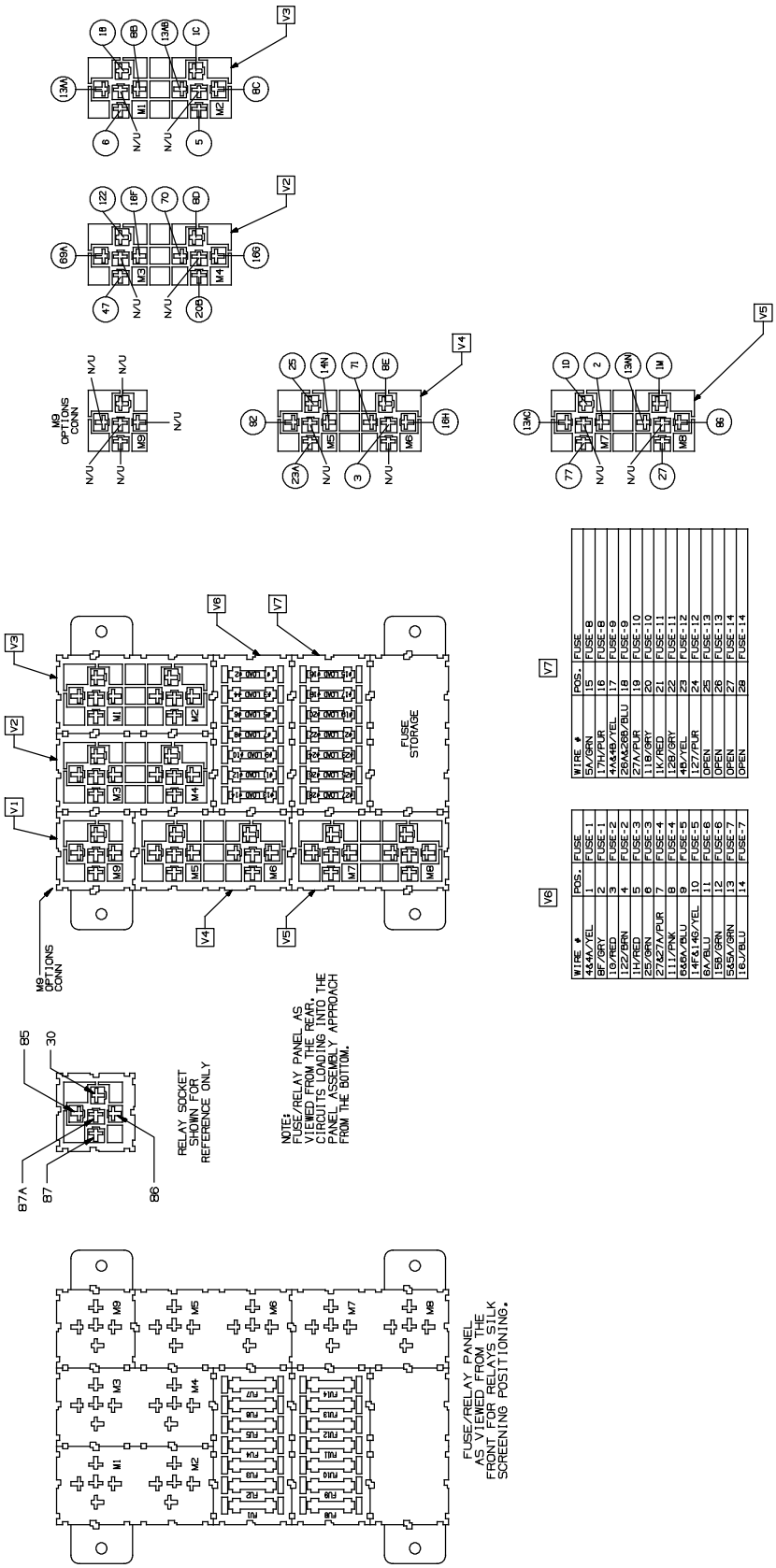

V6 WIRE #	POS.	FUSE
4&4A/YEL	1	FUSE-1
8F/GRY	2	FUSE-1
19/RED	3	FUSE-2
122/BRN	4	FUSE-2
1H/RED	5	FUSE-3
25/GRN	6	FUSE-3
27&27A/PUR	7	FUSE-4
111/PNK	8	FUSE-4
6&6A/BLU	9	FUSE-5
47&1&46/YEL	10	FUSE-5
8A/BLU	11	FUSE-6
15B/GRN	12	FUSE-6
5&5A/GRN	13	FUSE-7
16J/BLU	14	FUSE-7

V7 WIRE #	POS.	FUSE
5A/GRN	15	FUSE-8
17H/PUR	16	FUSE-8
4A&46/YEL	17	FUSE-9
26A&26B/BLU	18	FUSE-9
27A/PUR	19	FUSE-10
118/GRY	20	FUSE-10
1K/RED	21	FUSE-11
12B/GRY	22	FUSE-11
46/YEL	23	FUSE-12
12C/PUR	24	FUSE-12
OPEN	25	FUSE-13
OPEN	26	FUSE-13
OPEN	27	FUSE-14
OPEN	28	FUSE-14

356678 - M20, M30

Ref.	Part No.	Serial Number	Description	Qty.
1	1075079	(008000-014000)	Harness, Main [M30/M20]	1

Fig. 67 - Electrical Wire Harness Group, Main (014001-)

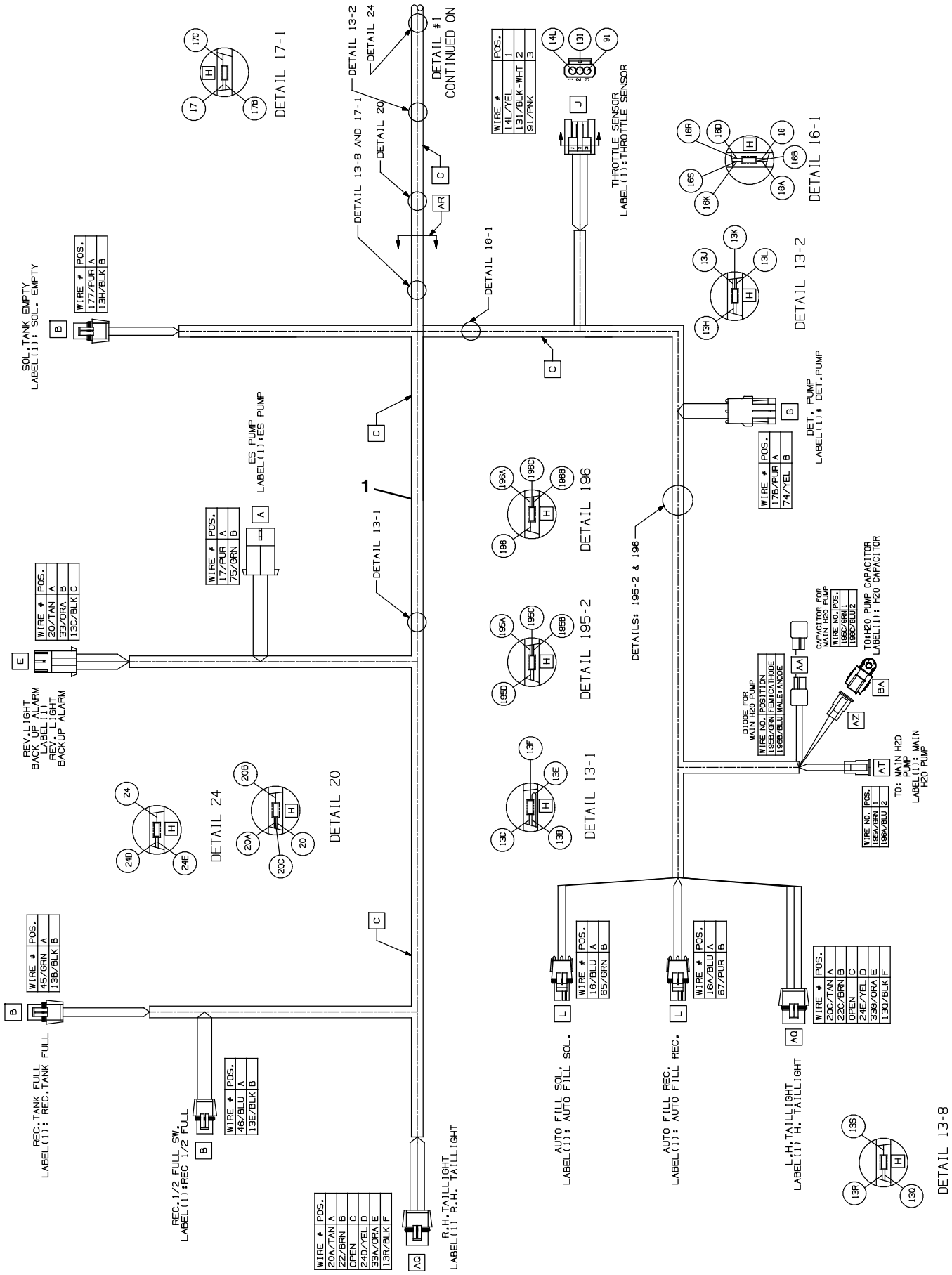

Fig. 67 - Electrical Wire Harness Group, Main (014001-)

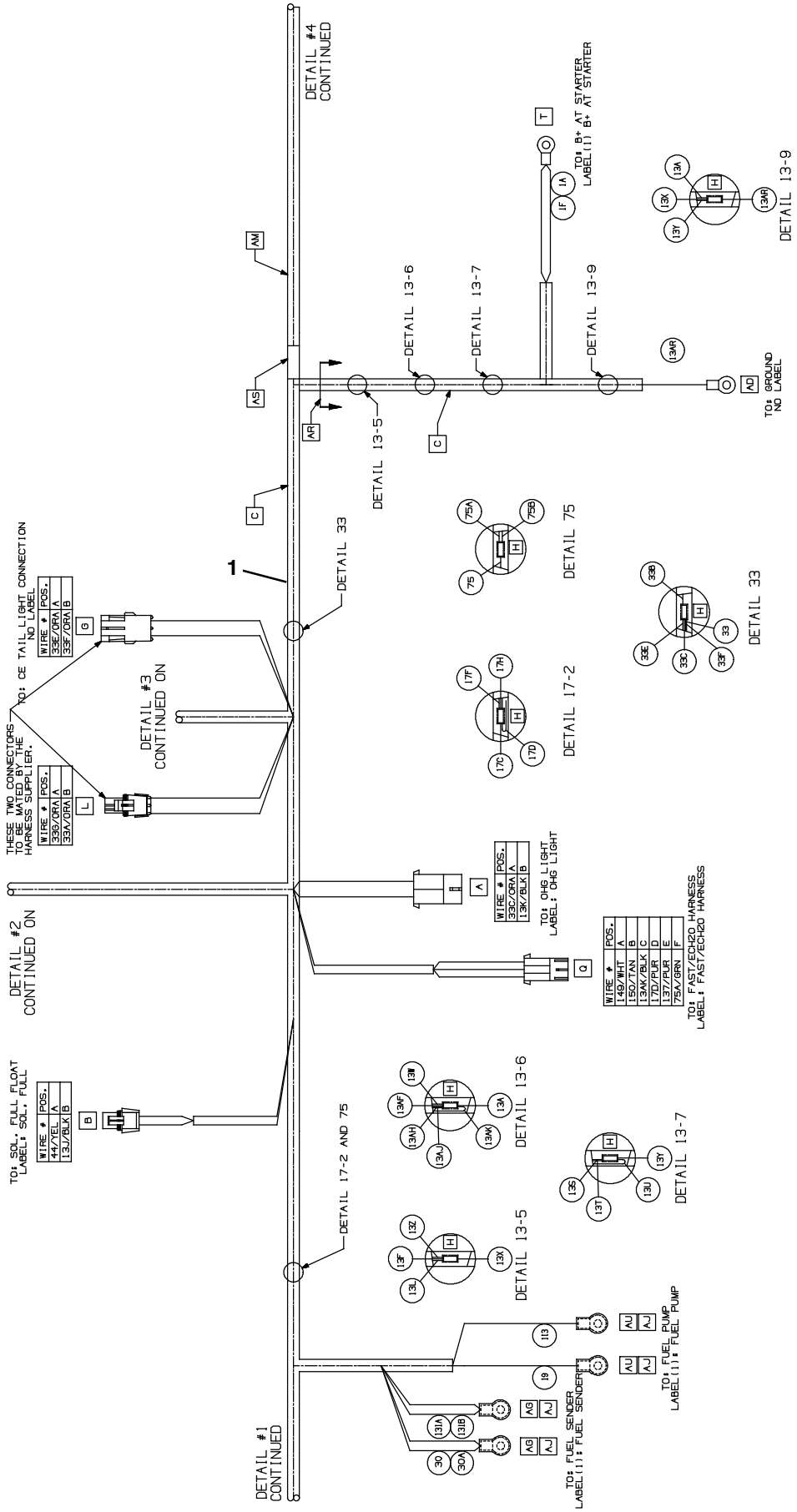

Fig. 67 - Electrical Wire Harness Group, Main (014001-)

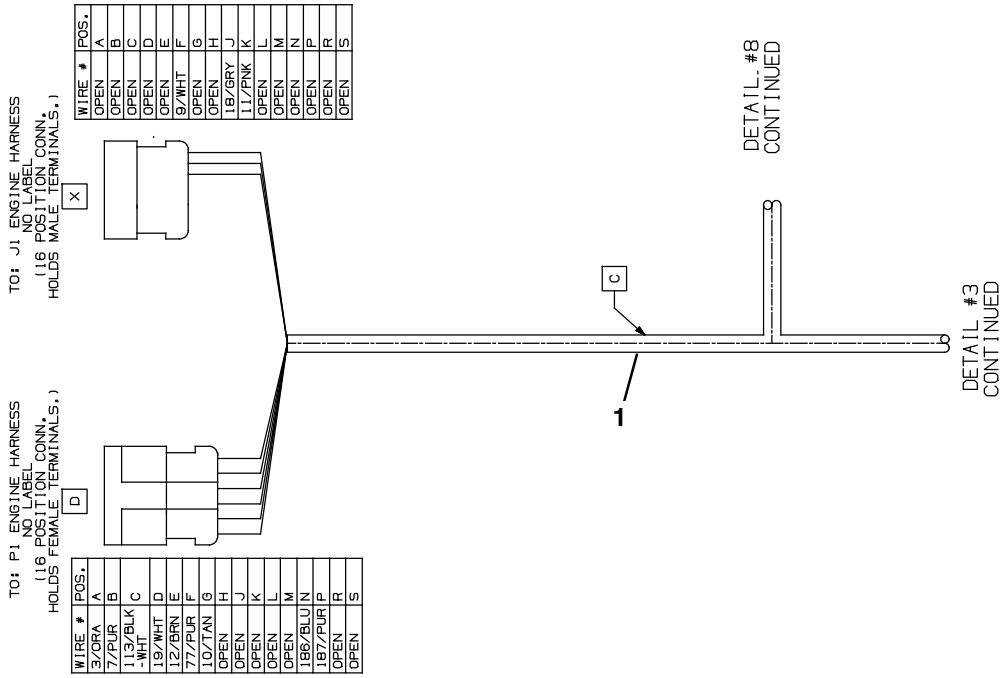

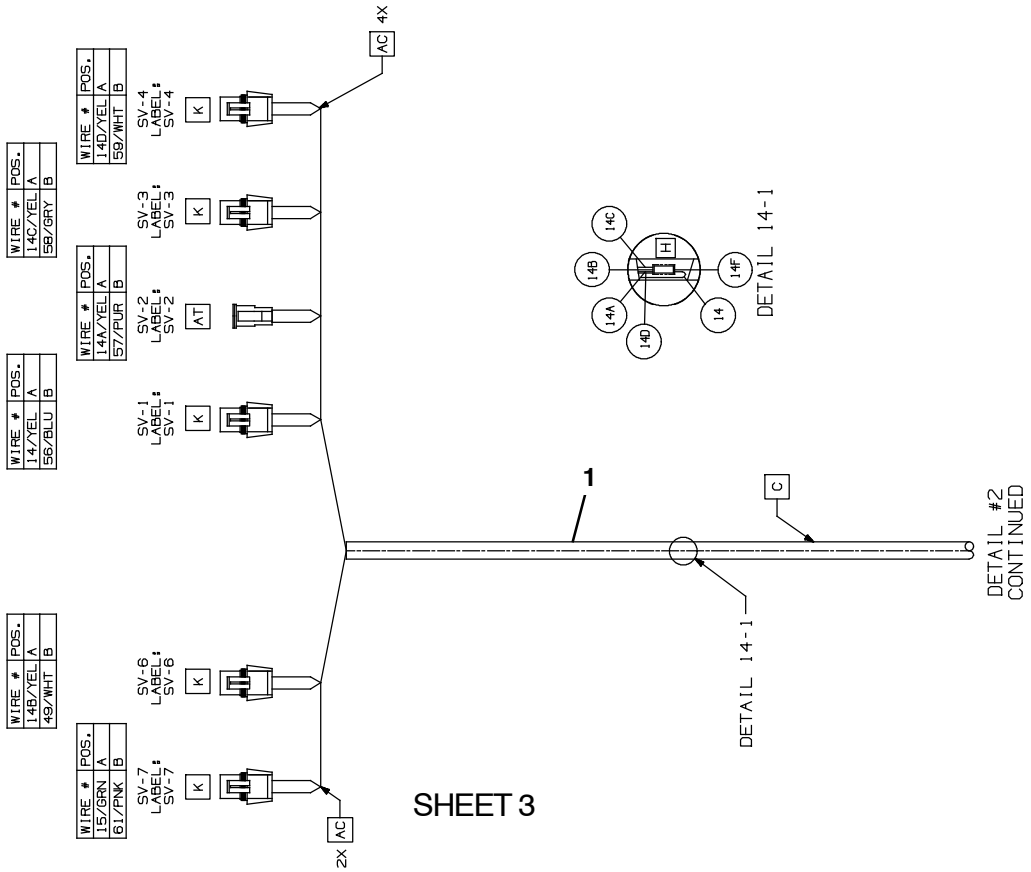

Fig. 67 - Electrical Wire Harness Group, Main (014001-)

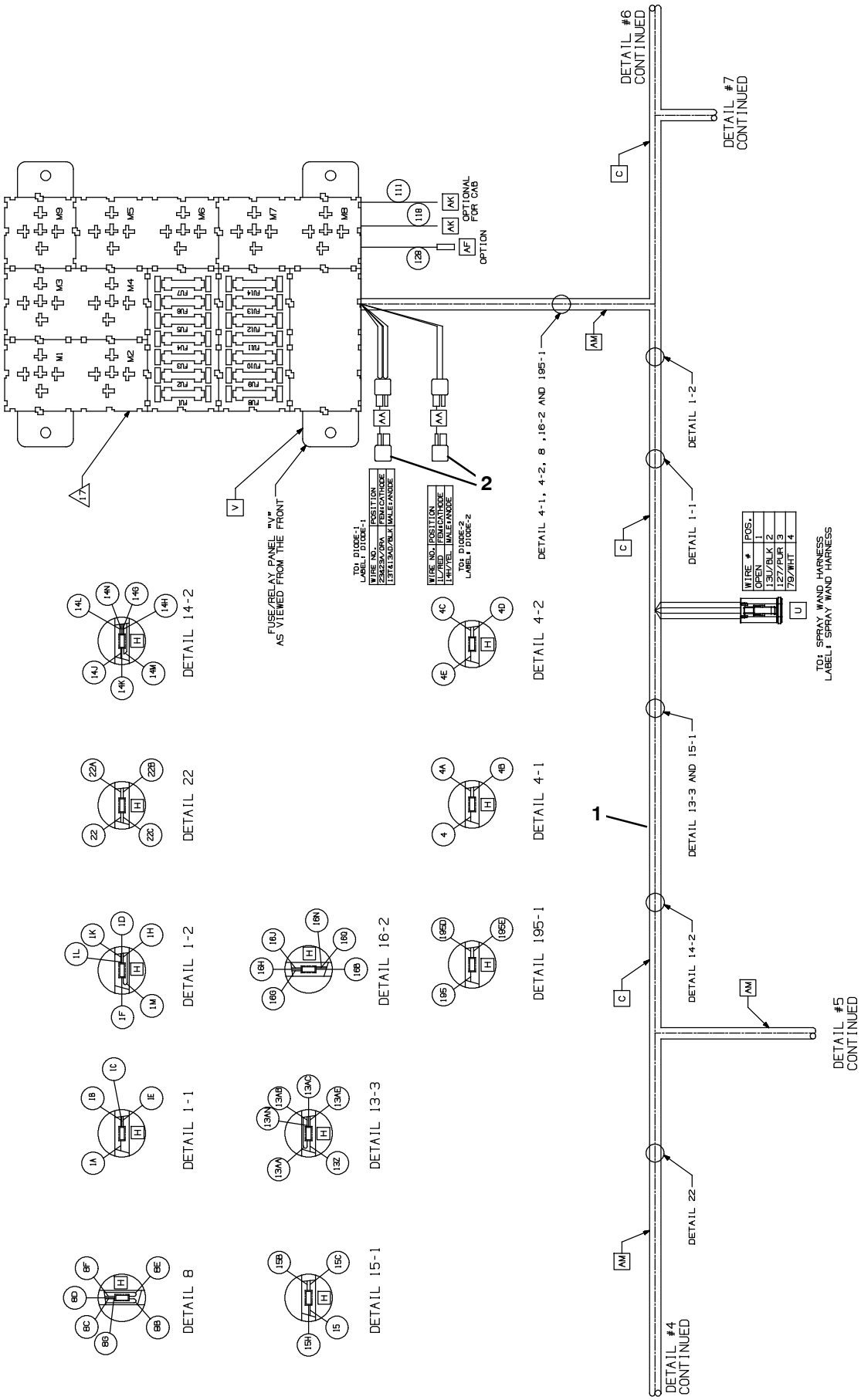

Fig. 67 - Electrical Wire Harness Group, Main (014001-)

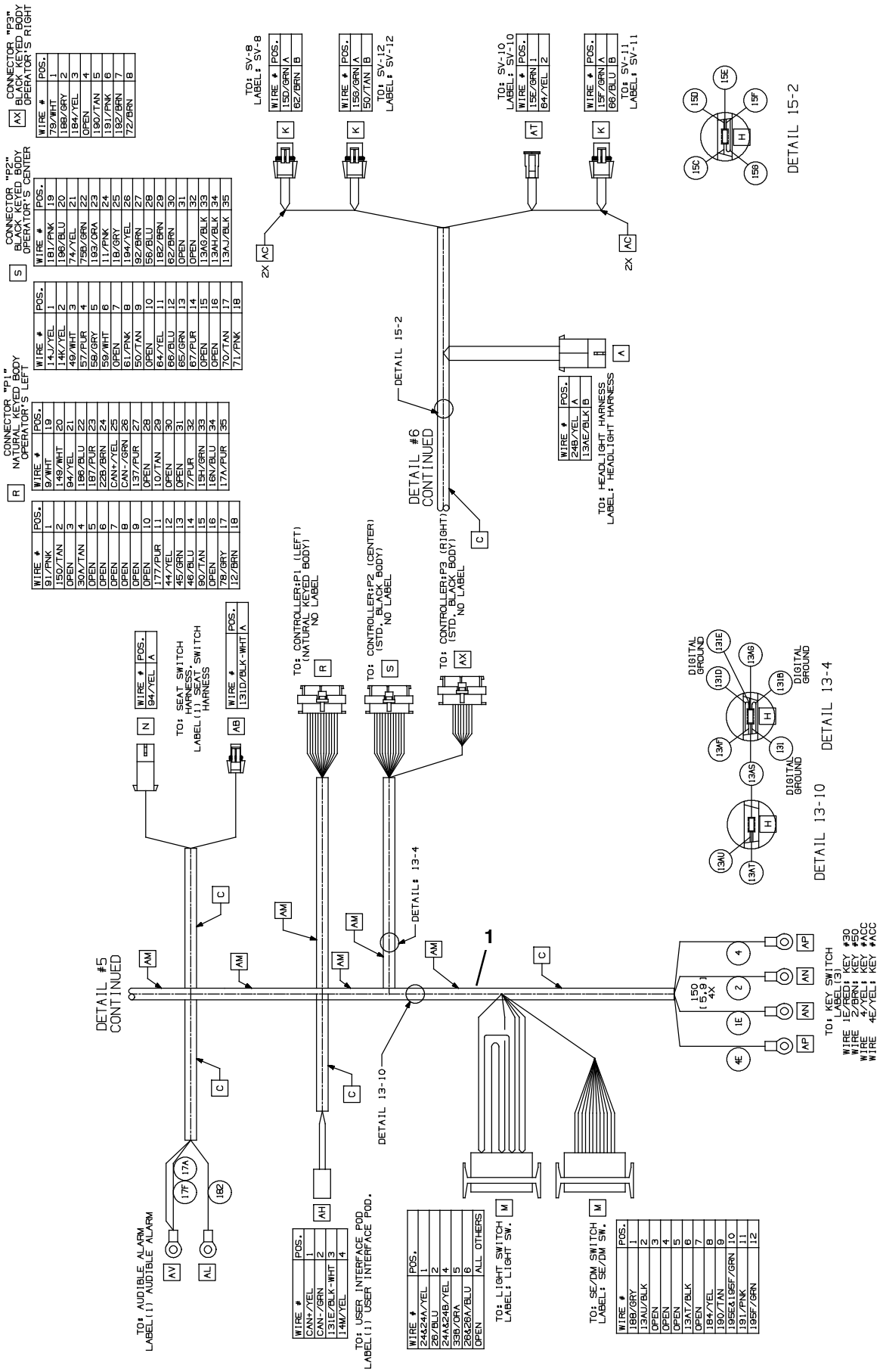

Fig. 67 - Electrical Wire Harness Group, Main (014001-)

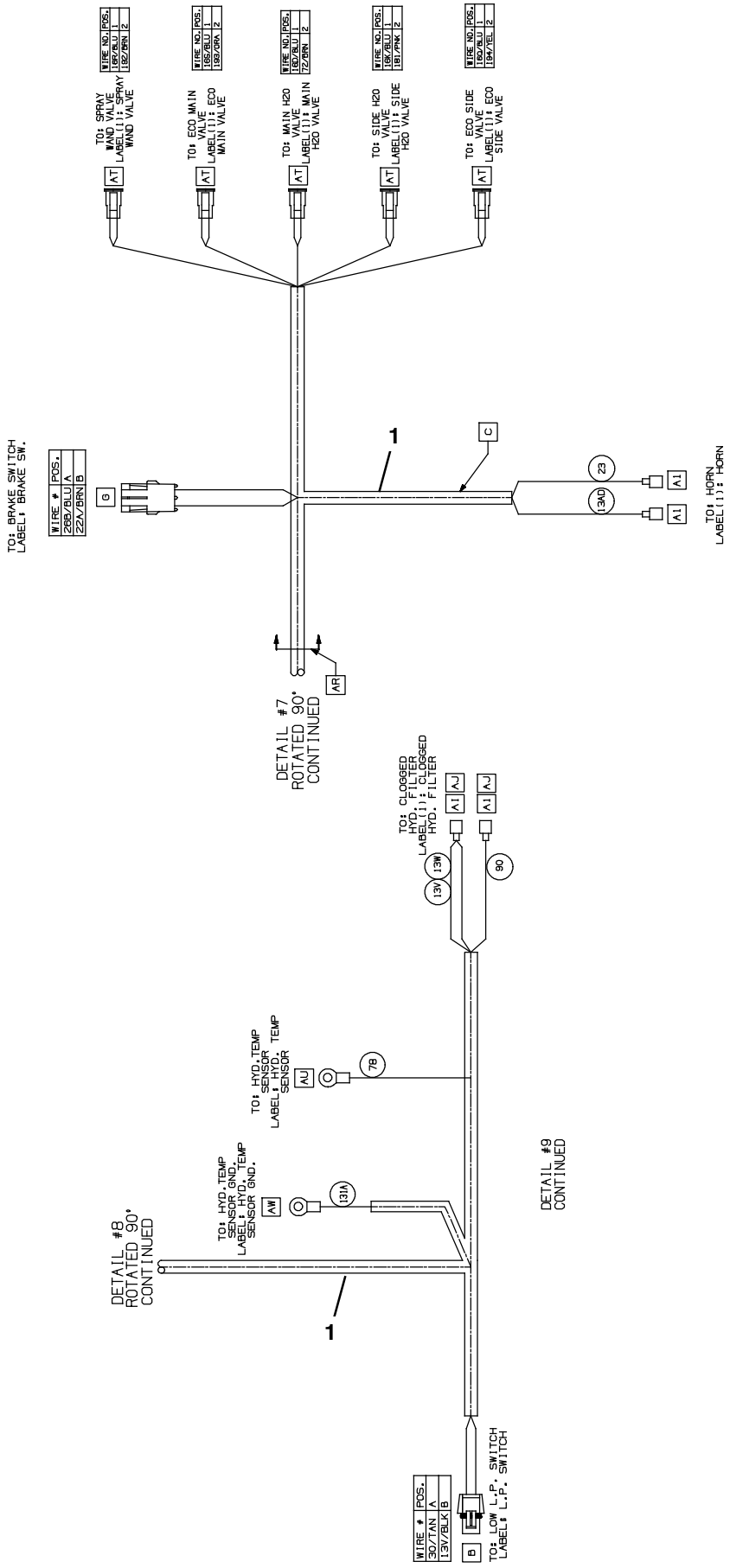

Fig. 67 - Electrical Wire Harness Group, Main (014001-)

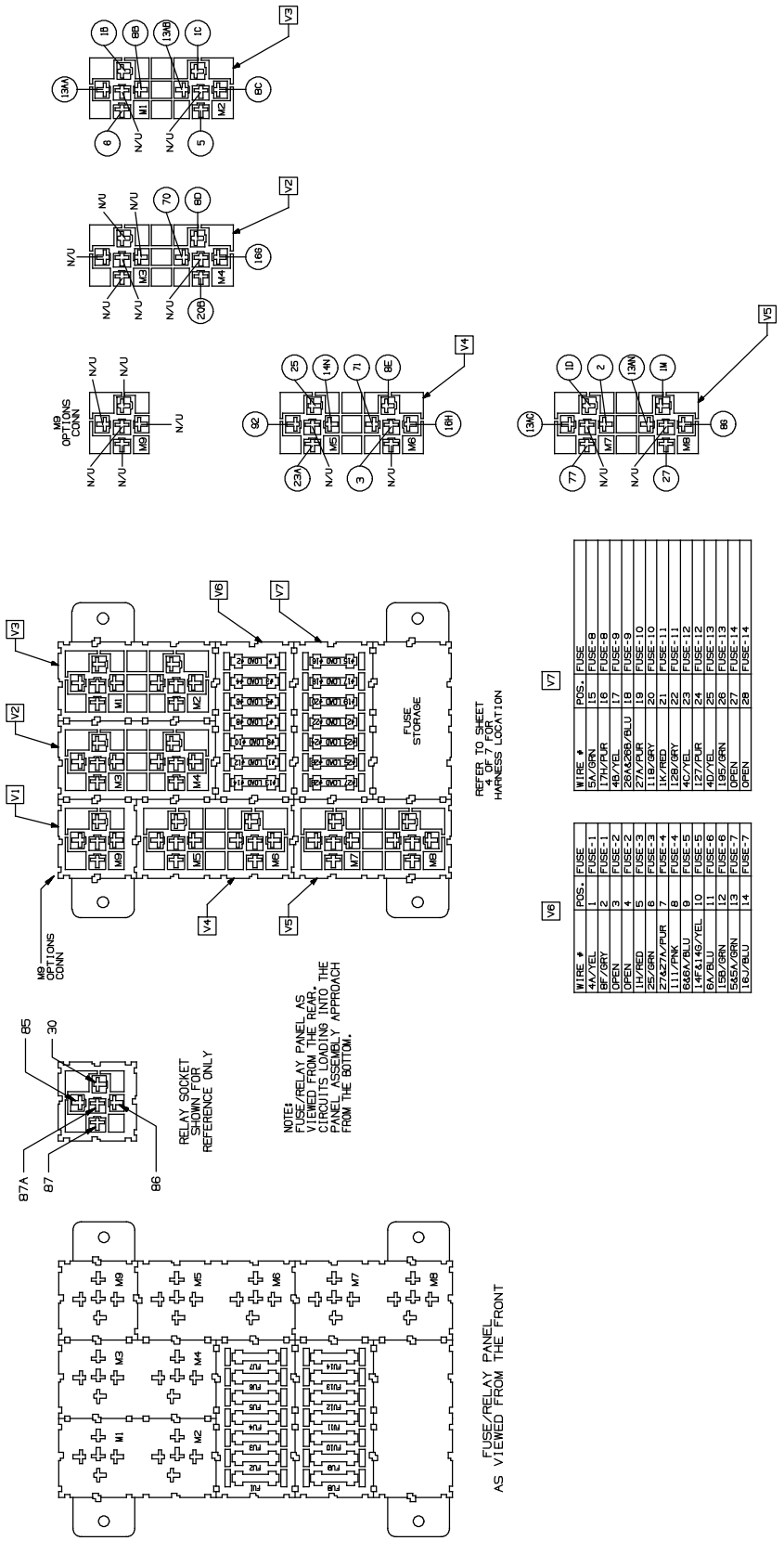

WIRE #	POS.	FUSE
4A/YEL	1	FUSE-1
8F/GRY	2	FUSE-1
OPEN	3	FUSE-2
OPEN	4	FUSE-2
1H/RED	5	FUSE-3
25/GRN	6	FUSE-3
27&27A/PUR	7	FUSE-4
111/PNK	8	FUSE-4
8&8A/BLU	9	FUSE-5
14F&14G/YEL	10	FUSE-5
8A/BLU	11	FUSE-6
15B/GRN	12	FUSE-6
5&5A/GRN	13	FUSE-7
16J/BLU	14	FUSE-7

V6

WIRE #	POS.	FUSE
5A/GRN	15	FUSE-8
17H/PUR	16	FUSE-8
4B/YEL	17	FUSE-9
28&28A/BLU	18	FUSE-9
27A/PUR	19	FUSE-10
118/GRY	20	FUSE-10
1K/RED	21	FUSE-11
128/GRY	22	FUSE-11
4C/YEL	23	FUSE-12
127/PUR	24	FUSE-12
4D/YEL	25	FUSE-13
195/GRN	26	FUSE-13
OPEN	27	FUSE-14
OPEN	28	FUSE-14

V7

357108 - M20, M30

Ref.	Part No.	Serial Number	Description	Qty.
1	1076973	(014001-)	Harness, Main [M30/M20]	1
2	222290	(014001-)	Diode, Ele, Plug	2

Fig. 68 - Electrical Wire Harness Group, Headlight

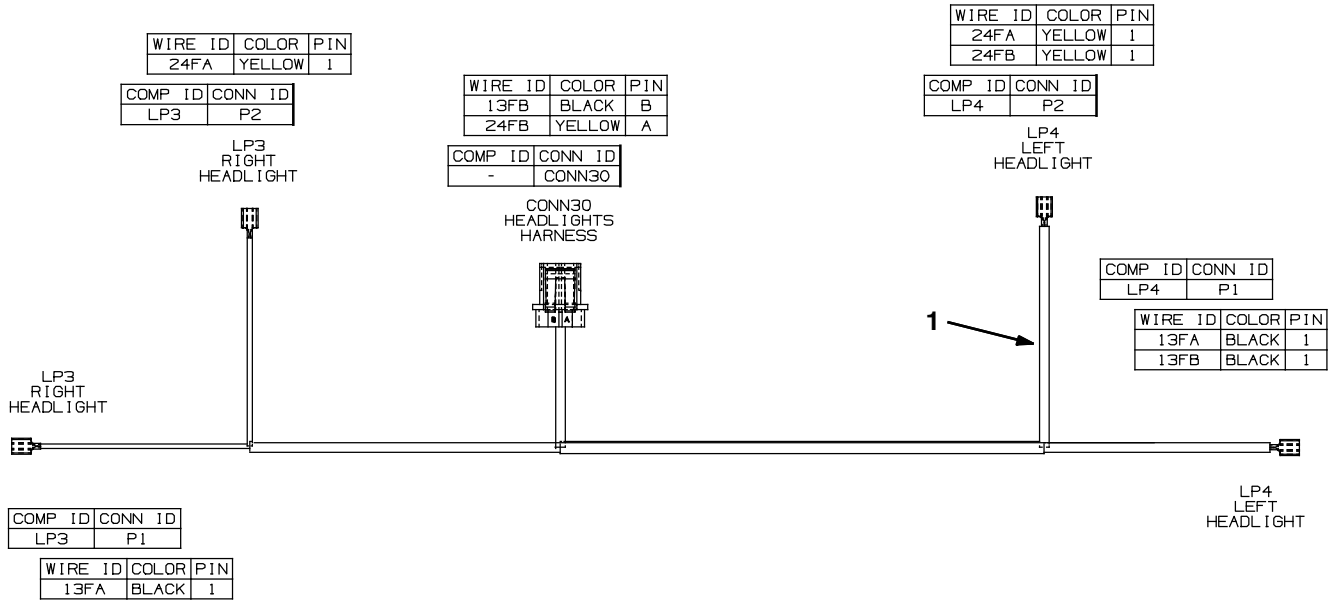

354716

Ref.	Part No.	Serial Number	Description	Qty.
1	1024141	(008000-)	Harness, Headlight [M20 And T20]	1

Fig. 69 - Electrical Wire Harness Group, Hopper

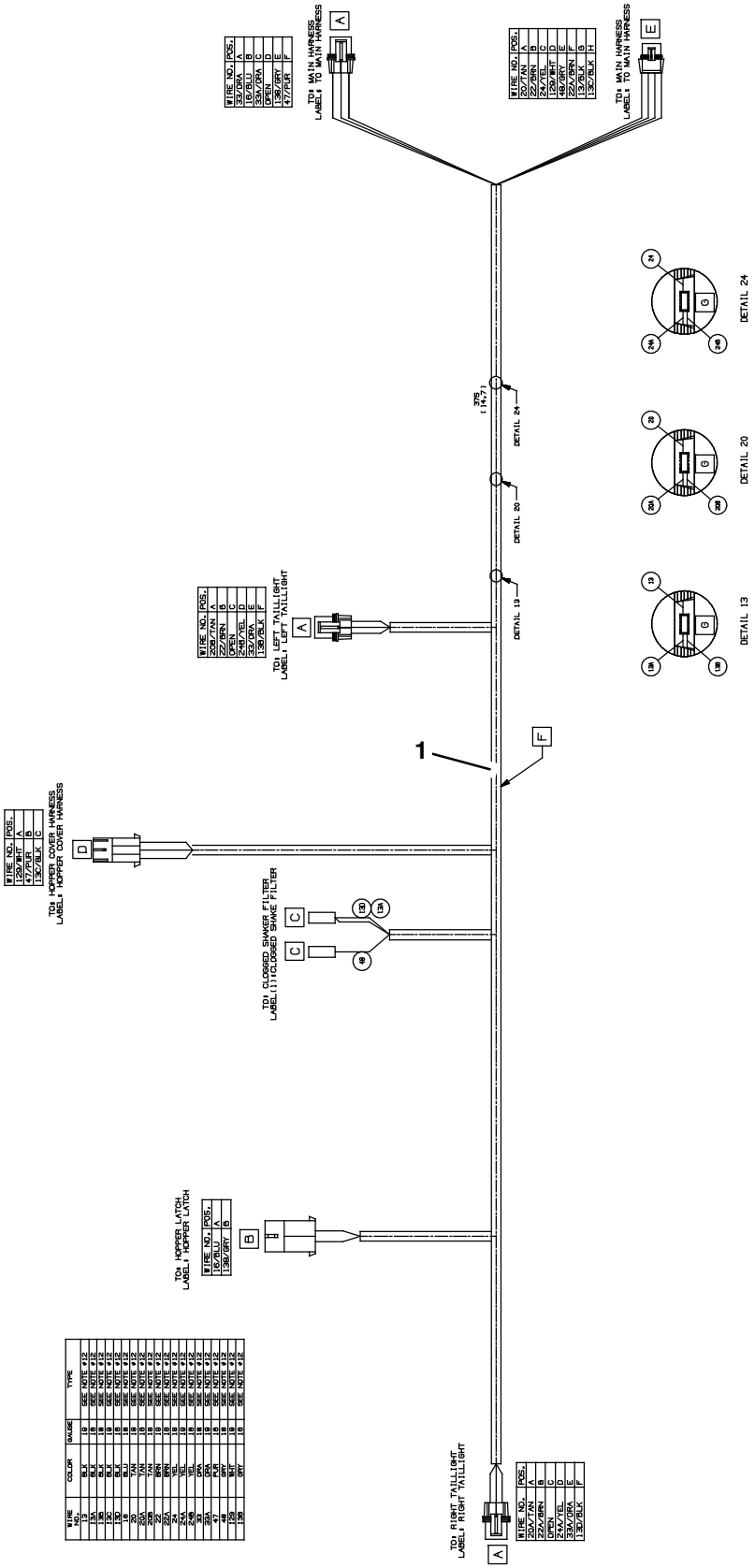

356253 - M20, M30

Ref.	Part No.	Serial Number	Description	Qty.
1	1075080	(008000-)	Harness, Hppr, Ele [M20/M30]	1

Fig. 70 - Electrical Wire Harness Group, Hopper Cover

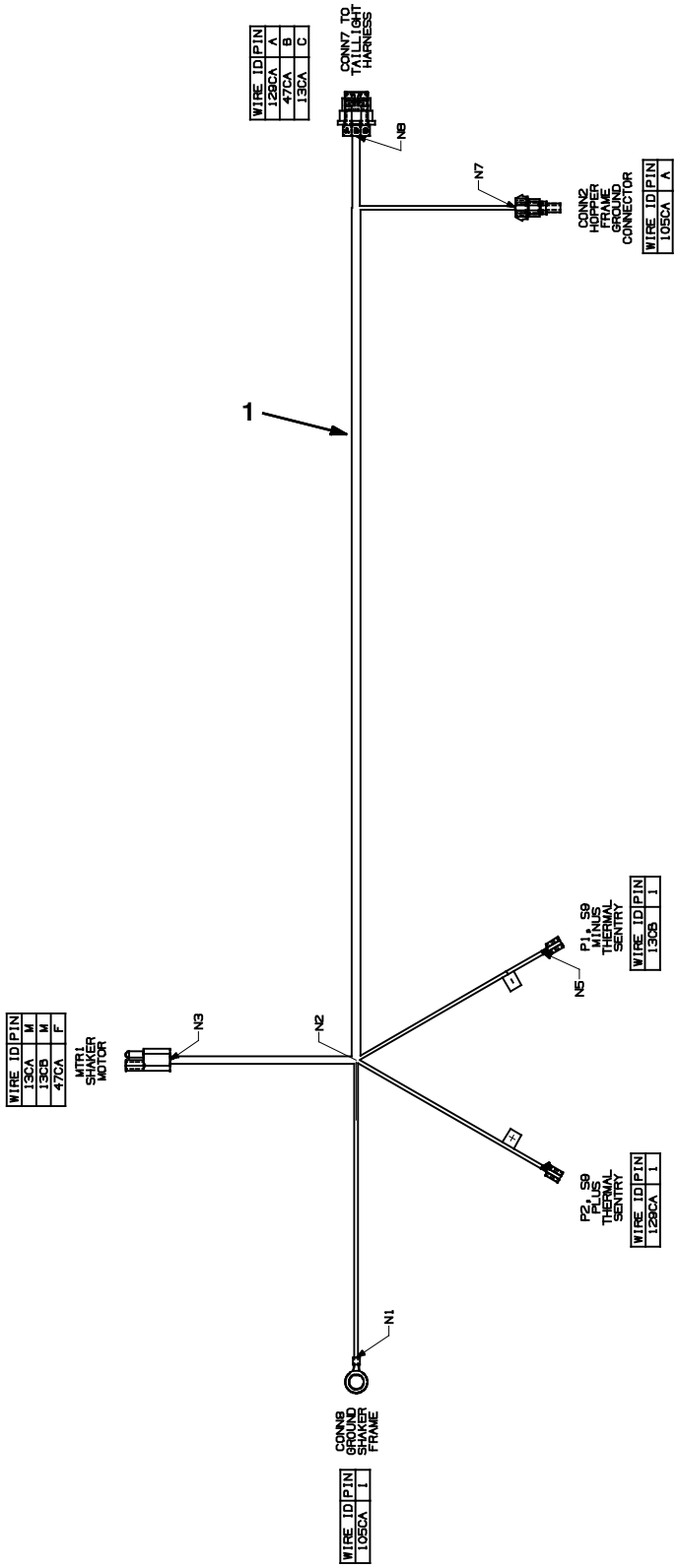

354389- 354459

Ref.	Part No.	Serial Number	Description	Qty.
1	1064370	(008000-)	Harness, Hppr, Cover [M20]	1

Fig. 71 - Electrical Wire Harness Group, Seat Switch

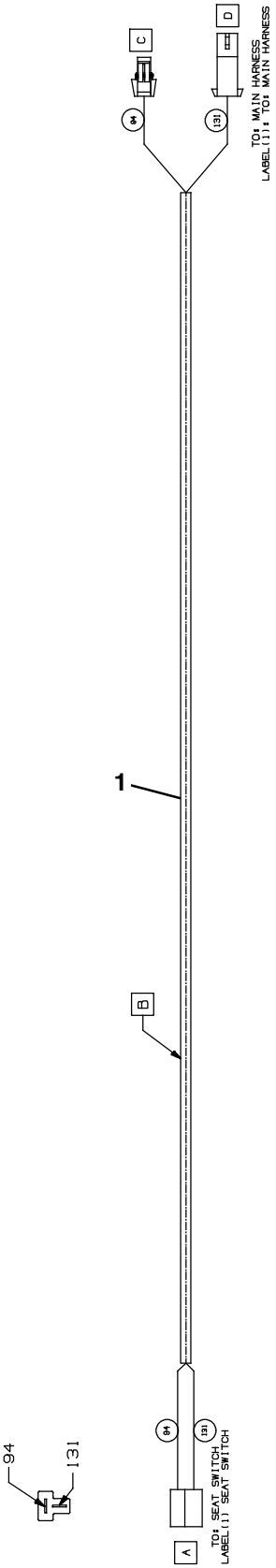

356994

Ref.	Part No.	Serial Number	Description	Qty.
1	1075141	(008000-)	Harness, Ele [Ce, Seat]	1

Fig. 72 - Electrical Wire Harness Group, Gasoline/LPG Engine

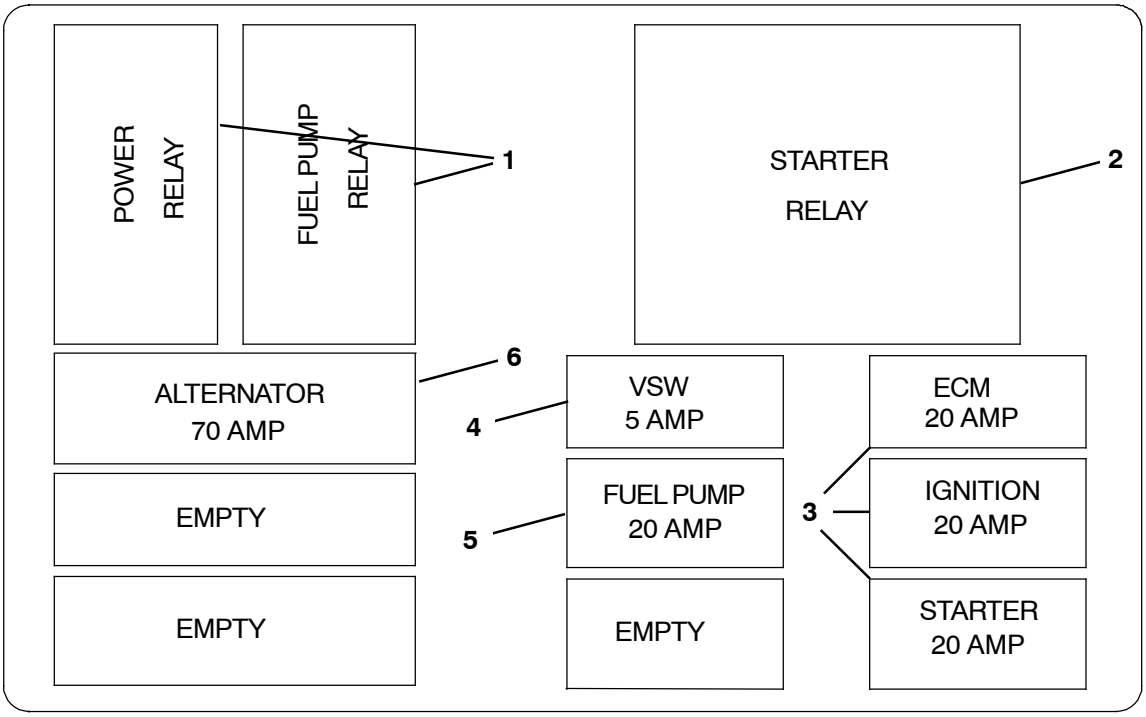

356696 - G/LP

	Ref.	Part No.	Serial Number	Description	Qty.
▽		1071653	(008000-)	Harness, Wire, Eng, Gas [Mit, 2.0l]	1
▲	1	394916	(008000-)	Relay, 12vdc, 20a, Spdt	2
▲	2	57804	(008000-)	Relay, 12vdc, 40a, Spdt	1
▲	3	372237	(008000-)	Fuse, 20 Amp, [Min- 20]	3
▲	4	372235	(008000-)	Fuse, 5 Amp, [Min- 5]	1
▲	5	384999	(008000-)	Fuse, 10 Amp	1
▽		1071654	(008000-)	Harness, Wire, Eng, Lpg [Mit, 2.Ol]	1
▲	1	394916	(008000-)	Relay, 12vdc, 20a, Spdt	2
▲	2	57804	(008000-)	Relay, 12vdc, 40a, Spdt	1
▲	3	372237	(008000-)	Fuse, 20 Amp, [Min- 20]	3
▲	4	372235	(008000-)	Fuse, 5 Amp, [Min- 5]	1
▲	5	384999	(008000-)	Fuse, 10 Amp	1
▲	6	1076351	(008000-)	Fuse, Blade, 070a, 32vdc [Maxi]	1

Fig. 73 - Label Group

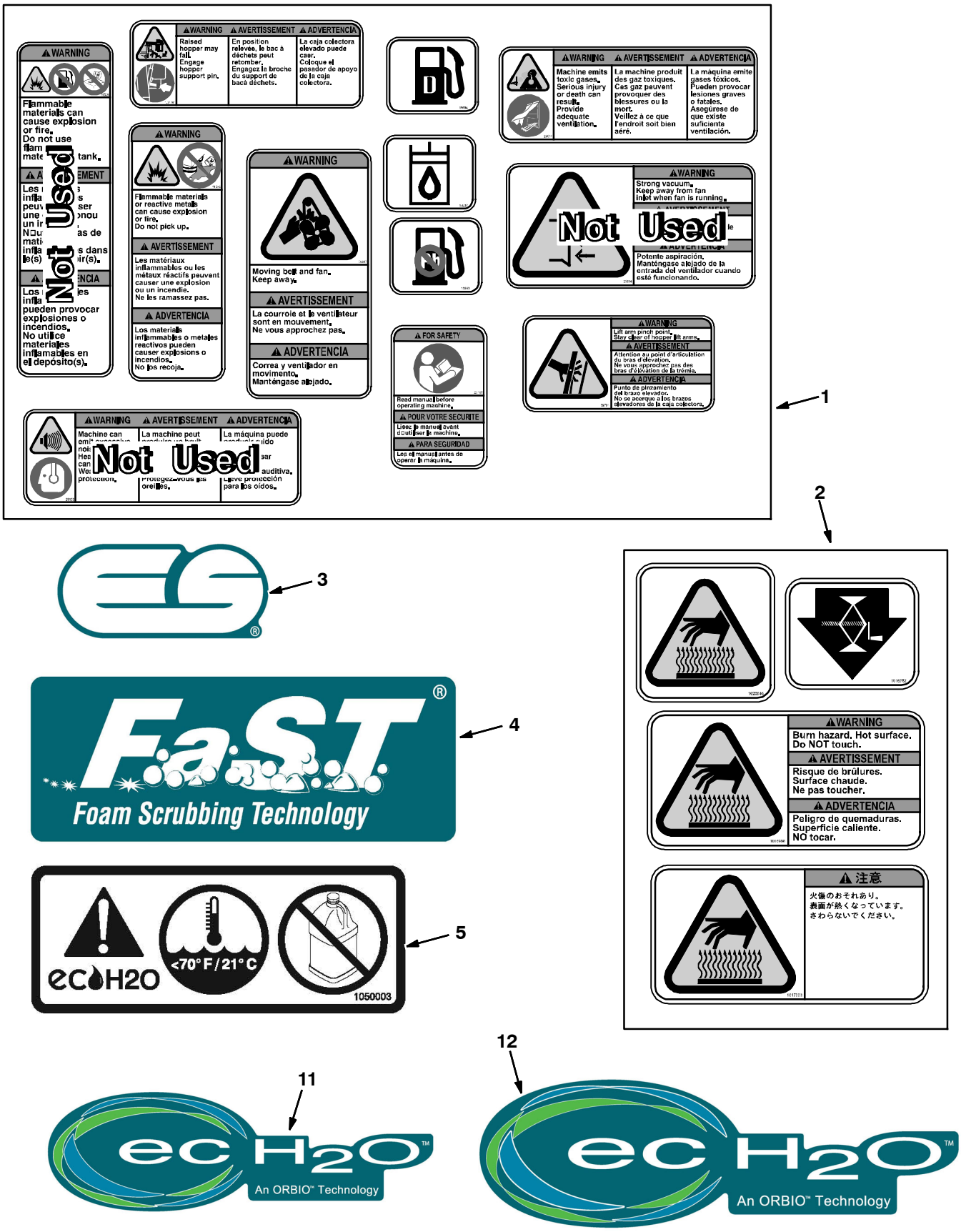

Fig. 73 - Label Group

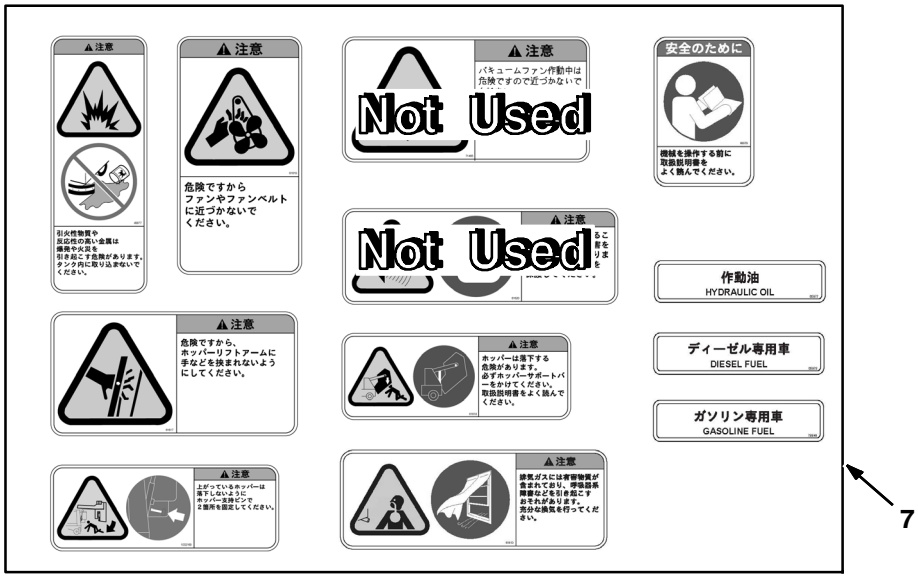

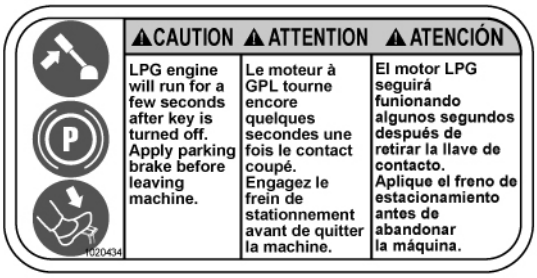

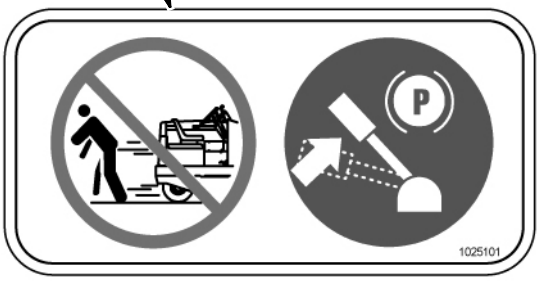

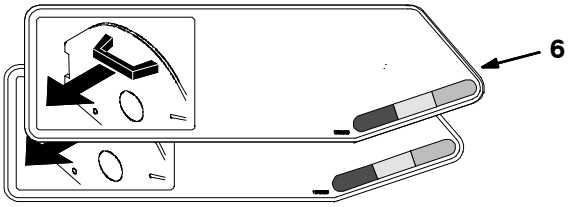

M20, G/LP

Ref.	Part No.	Serial Number	Description	Qty.
1	77221	(008000-)	Label Set, Info/Hzrd, Swpr / Scrbr	1
2	1017141	(008000-)	Label Set, Hi Temp	1
3	1065343	(008000-)	Label, Logo, 05.75L 2Color [ES]	3
4	1065342	(008000-)	Label, Logo, 07.95L 2Color [FaST]	3
5	1050003	(008000-)	Label [User, Attention, ec- H2O]	2
6	1031017	(008000-)	Label Set, Brush Indicator & Removal	1
7	1032450	(008000-)	Label Set, Info/Hzrd, Swpr / Scrbr, Tj (Japan Only)	1
8	1020434	(008000-)	Label, Caution [Apply Parking Brake]	1
9	1025101	(008000-)	Label, Caution [Apply Parking Brake] (Japan Only)	1
10	1064662	(008000-)	Label, Model, 2Color [M20]	2
11	1062813	(008000-)	Label, Logo, 12.3L 4Color [ec- H2O]	1
12	1064440	(008000-)	Label, Logo, 16.9L 4Color [ec- H2O]	1

SECTION 3

Contents **Page**

Fig. 1 – ES Pump Group 3-2
Fig. 2 – ES Tanks Group 3-4
Fig. 3 – Side Brush Motor Group 3-6
Fig. 4 – Side Brush Lift Group 3-8
Fig. 5 – Side Brush Solution Control Group (008000– 014000) 3-10
Fig. 6 – Side Brush Solution Control Group (014001–) 3-12
Fig. 7 – Side Brush Hydraulic Valve Group 3-14
Fig. 8 – Side Brush Hydraulic Hose Group 3-16
Fig. 9 – FaST Pumps and Detergent Group . . . 3-18
Fig. 10 – FaST Solution Supply Group 3-20
Fig. 11 – FaST Solution Supply Group with Side Brush 3-22
Fig. 12 – FaST Wire Harness Group 3-24
Fig. 13 – ec–H20 Solution Pump Group 3-26
Fig. 14 – ec–H20 Solution Pump Supply Group (008000–014000) 3-28
Fig. 15 – ec–H20 Solution Pump Supply Group (013XXX–) 3-30
Fig. 16 – ec–H20 Solution Supply Group (008000–014000) 3-32
Fig. 17 – ec–H20 Solution Supply Group (014001–) 3-34
Fig. 18 – ec–H20 Solution Supply Group with Side Brush (008000–014000) 3-36
Fig. 19 – ec–H20 Solution Supply Group with Side Brush (014001–) 3-38
Fig. 20 – ec–H20 Wire Harnesses Group 3-40
Fig. 21 – Backup Alarm Kit 3-45
Fig. 22 – Light Kit, Flashing 3-46
Fig. 23 – Light Kit, Strobe 3-47
Fig. 24 – Light Kit, Flashing Overhead Guard . . 3-48
Fig. 25 – Light Kit, Strobe Overhead Guard 3-49
Fig. 26 – Overhead Guard Kit 3-50
Fig. 27 – Telemetry Group 3-52
Fig. 28 – Vacuum Wand Kit 3-54
Fig. 29 – Spray Nozzle Kit (008000–014000) . . . 3-56
Fig. 30 – Spray Nozzle Group (014001–) . . . 3-58
Fig. 31 – Transport Kit 3-60
Fig. 32 – Squeegee Guard Kit 3-62
Fig. 33 – Pressure Washer Mount Group 3-64
Fig. 34 – Pressure Washer Solution Group (008000–014000) 3-66
Fig. 35 – Pressure Washer Solution Group (014001–) 3-68
Fig. 36 – Pressure Washer Hydraulic Hoses Group 3-70
Fig. 37 – Wet Dust Control Hopper Cover Group (010900–) 3-72
Fig. 38 – Fire Extinguisher Kit 3-74
Fig. 39 – Frame Tie Down and Tow Group 3-75
Fig. 40 – Rear Squeegee Guard Group 3-76

Contents **Page**

Fig. 41 – Front Cover Latch Group 3-78
Fig. 42 – Detergent Metering Group (014001–) 3-80
Fig. 43 – Spotlight Kit, Blue 3-82
Fig. 44 – Documentation Group (Online Only) . . 3-84

Fig. 1 – ES Pump Group

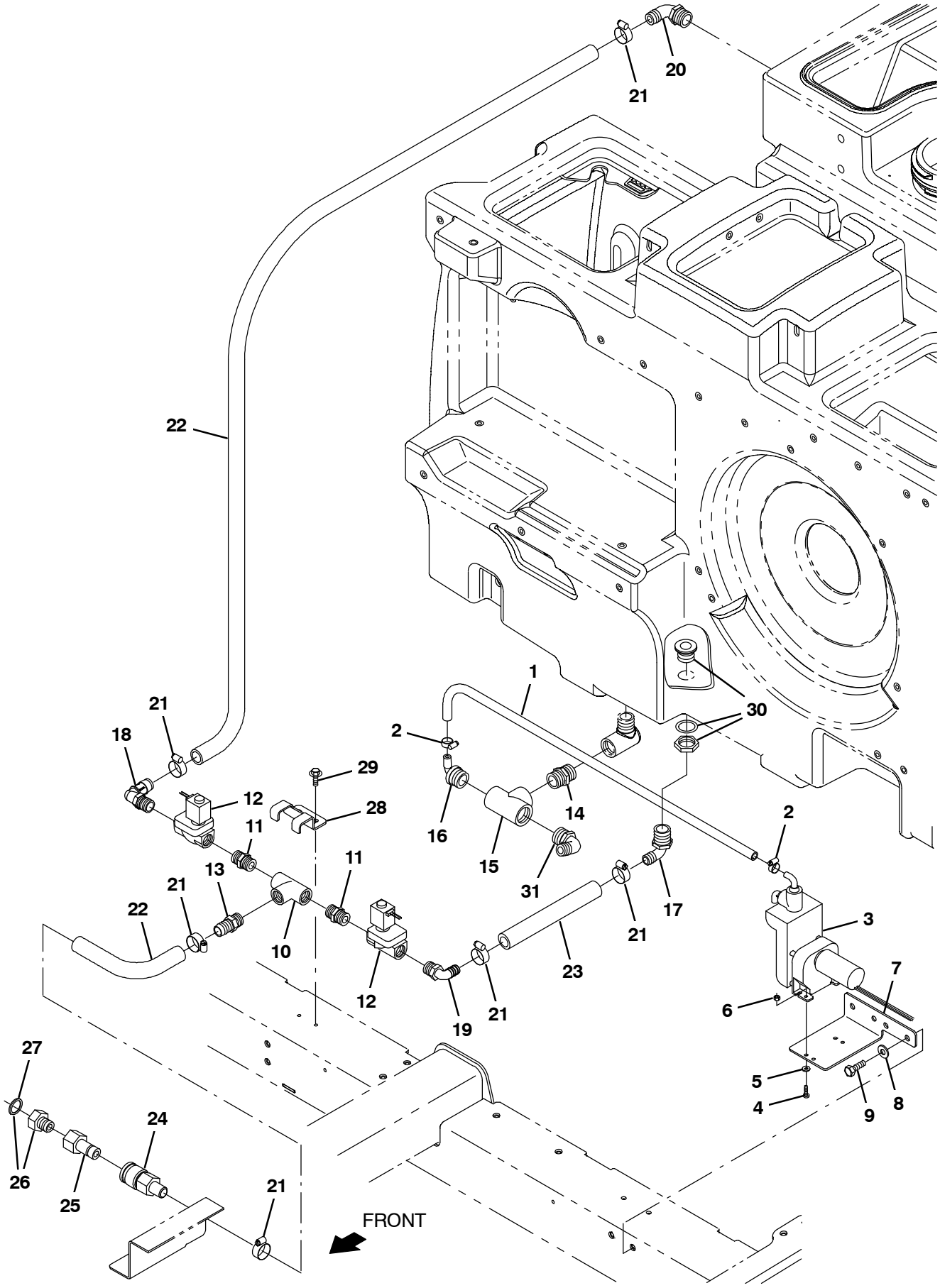

354461

Fig. 1 – ES Pump Group

	Ref.	Part No.	Serial Number	Description	Qty.
	1	41295	(008000–)	Hose, Pvc, Clr, 0.38id 0.56od 48.00l	1
	2	43844	(008000–)	Clamp, Hose, Wormdrive, 0.25–0.62d, .31w	2
	3	73260	(008000–)	Pump, Detgt, 14vdc, 150ml/Min 20psi (See Breakdowns)	1
	4	24265	(008000–)	Screw, Pan, M4 X 0.7 X 16, Ss	2
	5	01683	(008000–)	Washer, Flat, #10, Ss	2
	6	33932	(008000–)	Nut, Hex, Lock, M4 X 0.7, Nl, Ss	2
	7	1021325	(008000–)	Bracket, Mtg, Valve	1
	8	01685	(008000–)	Washer, Flat, 0.31, Ss	2
	9	09740	(008000–)	Screw, Hex, M8 X 1.25 X 20, Ss	2
	10	79497	(008000–)	Fitting, Plstc, Tee, Pf08/Pf08/Pf08	1
	11	86508	(008000–)	Fitting, Plstc, Str, Pm08/Pm08	2
	12	73433	(008000–)	Valve, Water, Solenoid, 12vdc 0.08pf	2
	13	78398	(008000–)	Fitting, Plstc, Str, Bm12/Pm08, Nyl	1
	14	24544	(008000–)	Fitting, Plstc, Str, Pm12/Pm12 1.60l	1
	15	42133A	(008000–)	Fitting, Plstc, Tee, Pf12/Pf12/Pf12	1
	16	79484	(008000–)	Fitting, Plstc, E90, Bm06/Pm12, Nyl	1
	17	73468	(008000–)	Fitting, Plstc, E90, Bm10/Pm12	1
	18	63244–2	(008000–)	Fitting, Plstc, E90, Bm12/Pm08	1
	19	630371	(008000–)	Fitting, Plstc, E90, Bm10/Pm08	1
	20	14877	(008000–)	Fitting, Plstc, E90, Bm12/Pm12	1
	21	63810	(008000–)	Clamp, Hose, Wormdrive, 0.56–1.06d, .56w	6
	22	1015045	(008000–)	Hose, Afmkt, Pvc, Brd 0.75id 08ft	1
	23	369811	(008000–)	Hose, Pvc, Brd, 0.62id 0.88od 09.00l	1
	24	24105	(008000–)	Fitting, Brs, Qdc, Bm12/Qf08	1
	25	33295	(008000–)	Fitting, Brs, Qdc, Pf08 [Parker Bh3f]	1
▽	26	375322	(008000–)	Fitting Kit, Hose, Garden	1
▲	27	01316	(008000–)	Washer, Flat, 0.66b 1.00d .12, Rbr	1
	28	1016837	(008000–)	Bracket, Mtg, Valve	1
	29	361339	(008000–)	Screw, Hex, M6 X 1.0 X 16, Fmg	2
	30	377349	(008000–)	Fitting, Plstc, Pf12/Pf12, Bh	1
	31	73468	(008000–)	Fitting, Plstc, E90, Bm10/Pm12	1

Fig. 2 – ES Tanks Group

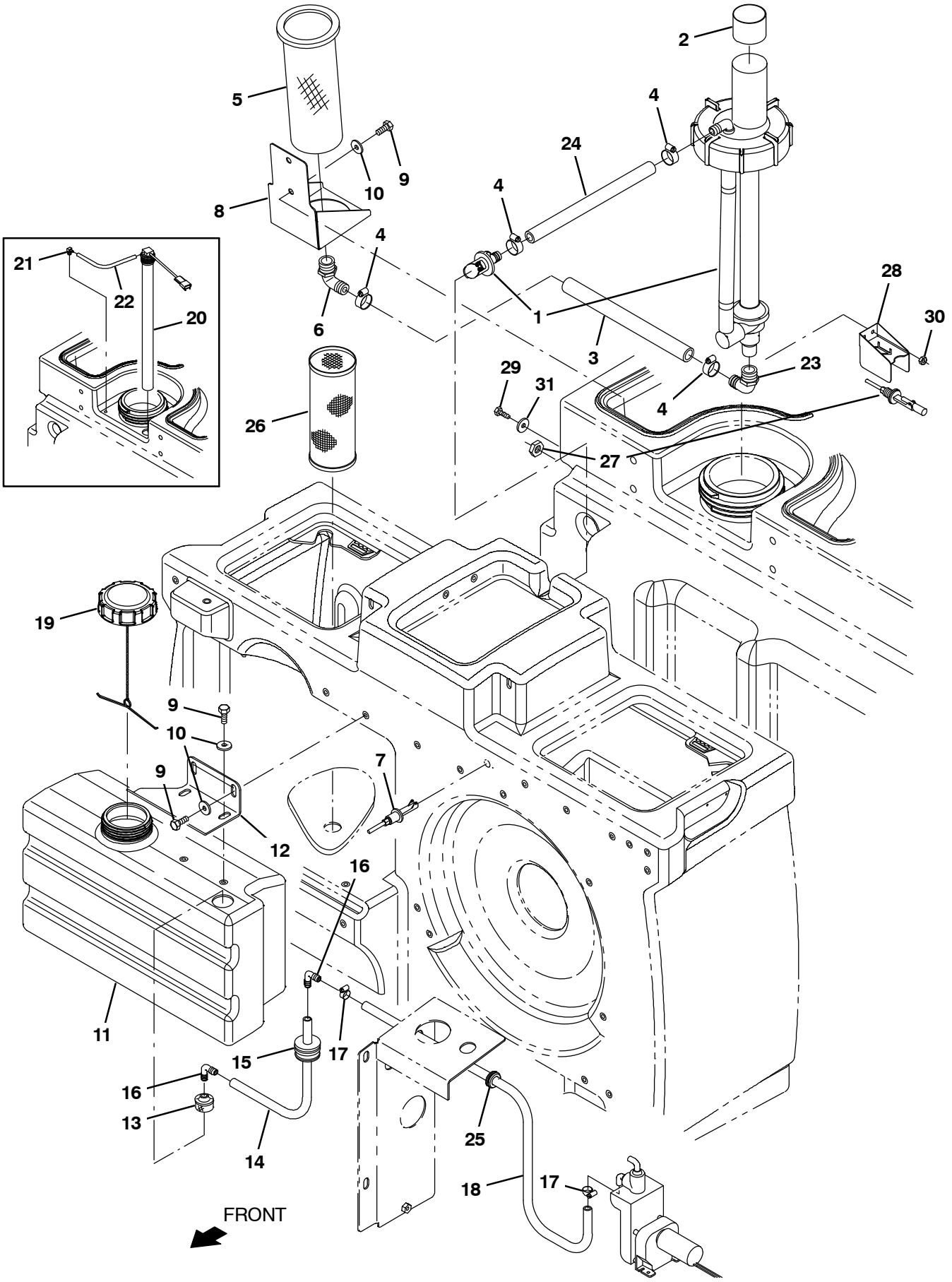

354462

Fig. 2 – ES Tanks Group

Ref.	Part No.	Serial Number	Description	Qty.
1	1021210	(008000–)	Pump Assy, Column, Es (See Breakdowns)	1
2	1028697	(008000–)	Sleeve, Rbr, 3.50b 3.58d 1.8l	1
3	1015048	(008000–)	Hose, Afmkt, Pvc, Brd 0.75id 01ft	1
4	63810	(008000–)	Clamp, Hose, Wormdrive, 0.56–1.06d, .56w	4
5	386652	(008000–)	Strainer, Soltn, 20 Mesh, Cyl 3.5d 9.5l	1
6	24543	(008000–)	Fitting, Plstc, E90, Bm12/Pf12	1
7	385685	(008000–)	Sensor, Level, Liq, 14vdc 01a .62–11	1
8	1019636	(008000–)	Bracket, Mtg, Strainer	1
9	09740	(008000–)	Screw, Hex, M8 X 1.25 X 20, Ss	6
10	1017218	(008000–)	Washer, Flat, 0.32b 1.00d .12, Ss	6
11	1022229	(008000–)	Tank, Detgt, Trimmed	1
12	1025159	(008000–)	Bracket, Mtg, Detgt And Spray Wand	1
13	20952	(008000–)	Screen, Pump	1
14	1014974	(008000–)	Hose, Afmkt, Pvc, Brd 0.38id 02ft	1
15	20944	(008000–)	Grommet, Pye, 0.37id, F/1.5h, .13 Matl	1
16	20951	(008000–)	Fitting, Plstc, E90, Bm06/Bm06	2
17	43844	(008000–)	Clamp, Hose, Wormdrive, 0.25–0.62d, .31w	2
18	41295	(008000–)	Hose, Pvc, Clr, 0.38id 0.56od 48.00l	1
19	1011885	(008000–)	Cap, Tank	1
20	1072877	(008000–012038)	Switch Assy, Press, 3.0, 17.5l Tube	1
21	32183	(008000–012038)	Fitting, Brs, E90, Pm02/Bm03	1
22	1031572	(008000–012038)	Hose, Afmkt, Vacuum, 0.16id, 01ft	1
23	14877	(008000–)	Fitting, Plstc, E90, Bm12/Pm12	1
24	1015033	(008000–)	Hose, Afmkt, Pvc, Brd 0.62Id, 01Ft, Clr	1
25	10632–2	(008000–)	Grommet, Rbr, 0.62id, F/0.9h, .12 Matl	1
26	1039019	(008000–)	Filter, Soltn, 020mesh, Pm12 3.2d 08.0l	1
27	385685	(012039–)	Sensor, Level, Liq, 14vdc 01a .62–11	1
28	1037816	(012039–)	Bracket, Protector, Float Switch	1
29	09007	(012039–)	Screw, Hex, M6 X 1.00 X 25, Ss	2
30	08712	(012039–)	Nut, Hex, Lock, M6 X 1.00, Nl, Ss	2
31	76426	(012039–)	Washer, Sealing, 0.28b 0.75d Ss, Neo	2

Fig. 3 – Side Brush Motor Group

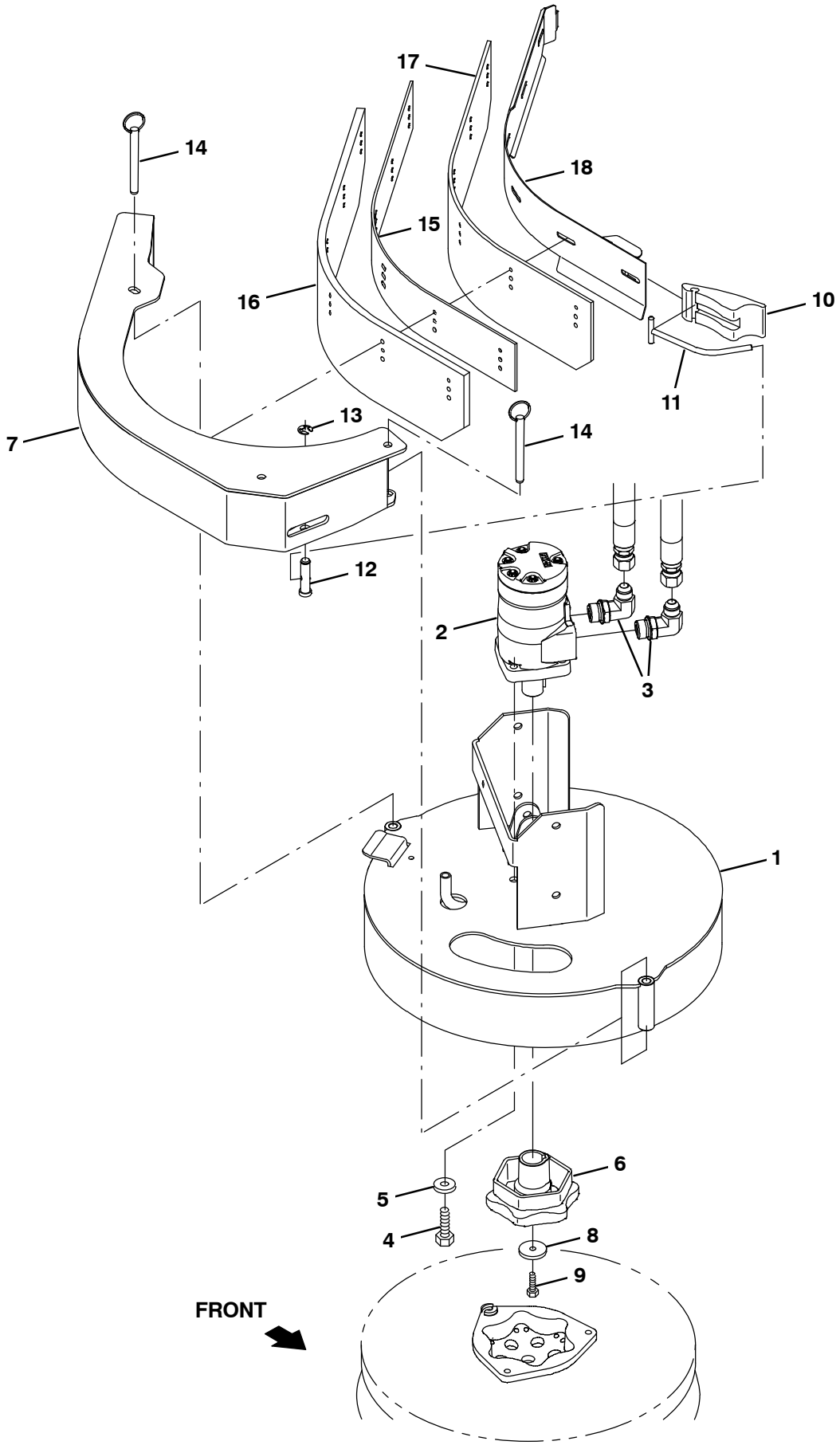

354463

Fig. 3 – Side Brush Motor Group

	Ref.	Part No.	Serial Number	Description	Qty.
	1	1047002	(008000–)	Bracket Wldt, Mtg, Side Brush Fixed	1
▽	2	1068812	(008000–)	Motor, Hyd, Gear, Int 08.9 Bi–Dir 2500	1
▲		22615	(008000–)	Seal Kit, Motor [Cl]	1
	3	56821	(008000–)	Fitting, Hyd, E90, Jm08/Om10	2
	4	01762	(008000–)	Screw, Hex, .38–16 X 0.75, Nl	4
	5	32492	(008000–)	Washer, Flat, 0.38 Std	4
	6	1042968	(008000–)	Hub, Drive, Brush, Disk, 1.00b [6t]	1
	7	1046976	(008000–)	Bumper Wldt, Brush, Side	1
	8	19191	(008000–)	Spacer	1
	9	25046	(008000–)	Screw, Hex, .25–20 X 1.00, 5	1
	10	1222020	(008000–)	Cam, Front, Yel	1
	11	386298	(008000–)	Pin Wldt, Front	1
	12	21603	(008000–)	Pin, Grvd, 0.43d 01.8l [303ss]	1
	13	24555	(008000–)	Ring, Retaining, Ext, 0.38d, [E–Ring]	1
	14	369359	(008000–)	Pin, Hitch, .375d X 3.12l, Pl	2
	15	1046995	(008000–)	Spacer, Sqge, Side Brush	1
	16	1046980	(008000–)	Blade, Sqge, Side Brush, Linatex	1
	16	1059091	(008000–)	Blade, Sqge, Side Brush, Urethane	1
	17	1047238	(008000–)	Blade, Sqge, Side Brush, Linatex	1
	17	1059092	(008000–)	Blade, Sqge, Side Brush, Urethane	1
	18	1047060	(008000–)	Plate Wldt, Retainer, Sqge	1

Fig. 4 – Side Brush Lift Group

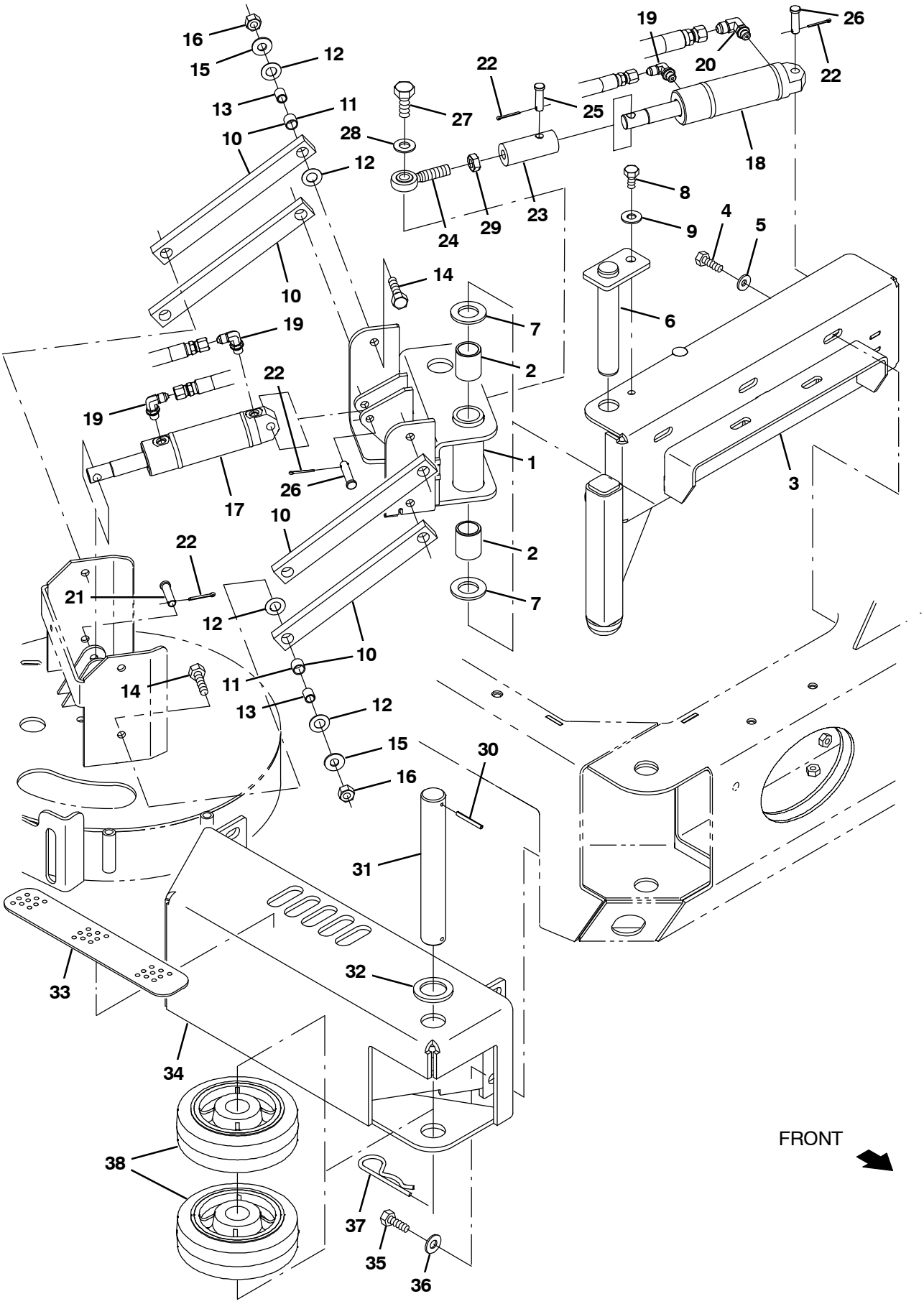

354464

Fig. 4 – Side Brush Lift Group

	Ref.	Part No.	Serial Number	Description	Qty.
	1	1021439	(008000–)	Pivot Wldt, Brush, Side	1
	2	71868	(008000–)	Bushing, Sleeve, 1.00b 1.13d 1.50l, Fgl	2
	3	1021473	(008000–)	Channel Wldt, Pivot	1
	4	09010	(008000–)	Screw, Hex, M8 X 1.25 X 25, Ss	5
	5	41186	(008000–)	Washer, Flat, Belleville, .31	5
	6	1021617	(008000–)	Pin Wldt	1
	7	71869	(008000–)	Washer, Thrust, 1.00b 1.75d 0.13w, Fbr	2
	8	16735	(008000–)	Screw, Hex, M8 X 1.25 X 16, 8.8	1
	9	32491	(008000–)	Washer, Flat, 0.31, Std	1
▽	10	63175–1	(008000–)	Arm, Link	4
▲	11	63233	(008000–)	Bushing, Sleeve, 0.50b 0.59d 0.50l, Bnz	2
	12	59633	(008000–)	Bearing, Thrust, 0.53b 1.00d 0.03w	16
	13	1027926	(008000–)	Sleeve, P/M, 0.37b 0.50d 0.6l [430ss]	8
	14	36845	(008000–)	Screw, Hex, .38–16 X 1.50, Ss	8
	15	01685	(008000–)	Washer, Flat, 0.31, Ss	8
	16	59156	(008000–)	Nut, Hex, Lock, .38–16, Nl, Ss	8
	17	1038137	(008000–)	Cylinder, Hyd, 1.5b 07.8l 02.80strk 2500	1
	18	1038115	(008000–)	Cylinder, Hyd, 1.5b 07.8l 02.75strk 2500	1
	19	77097	(008000–)	Fitting, Hyd, E90, Jm04/Om04	3
	20	77098	(008000–)	Fitting, Hyd, E90, Jm06/Om04	1
	21	29558	(008000–)	Pin, Clevis, 0.37d X 1.50l	1
	22	08179	(008000–)	Pin, Cotter, .094 X 1.00	4
	23	1021564	(008000–)	Adapter, Rod–End, Side Brush	1
	24	71874	(008000–)	Rod–End, .50–20rh Mal 0.50b	1
	25	29557	(008000–)	Pin, Clevis, 0.37d X 1.31l	1
	26	17461	(008000–)	Pin, Clevis, 0.37d X 1.75l	2
	27	41346	(008000–)	Screw, Hex, M12 X 1.75 X 30, 8.8	1
	28	32486	(008000–)	Washer, Flat, 0.50 Sae	1
	29	48985	(008000–)	Nut, Hex, Jam, .50–20	1
	30	23146	(008000–)	Pin, Roll, .187d X 1.62l, .187/.192	1
	31	1053838	(008000–)	Pin, 30mmd X 215mml	1
	32	47719	(008000–)	Washer, Flat, 1.26b 1.88d .13, Stl	1
	33	82839	(008000–)	Tread, Non–Skid, 02.2w 11.5l	1
	34	1022318	(008000–)	Guard Wldt, Brush, Side	1
	35	12317	(008000–)	Screw, Hex, M10 X 1.5 X 30, Ss	4
	36	01686	(008000–)	Washer, Flat, 0.44b 1.00d .08, Ss	4
	37	34411	(008000–)	Pin, Cotter, Hair, 1.00d .178 Wir	1
	38	1060130	(008000–)	Wheel, 06.0D 2.00W 1.19B, Gray Rbr	2

Fig. 5 – Side Brush Solution Control Group (008000– 014000)

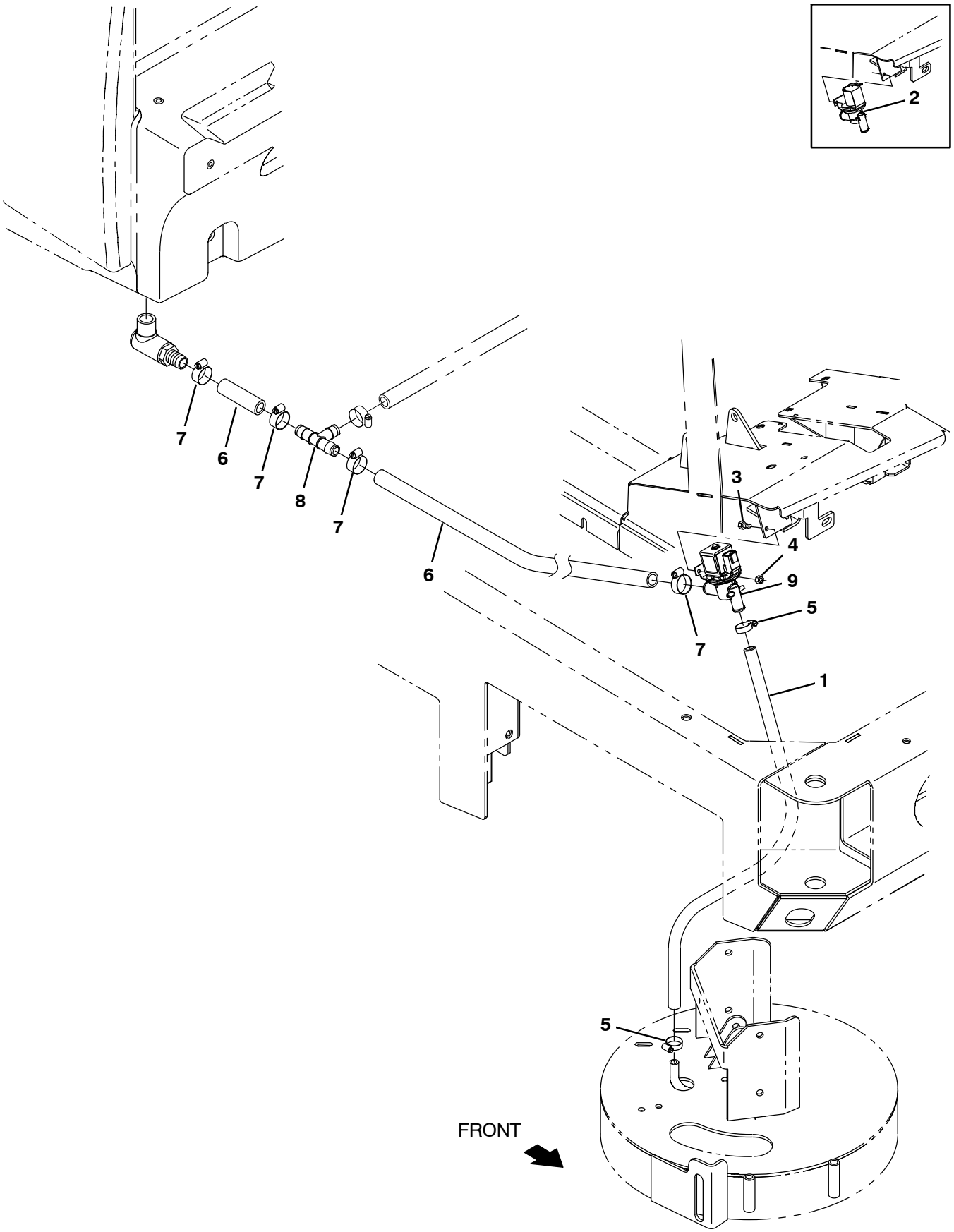

354465

Fig. 5 – Side Brush Solution Control Group (008000–014000)

Ref.	Part No.	Serial Number	Description	Qty.
1	50178	(008000–014000)	Hose, Pvc, Clr, 0.50id 0.69od 26.00l	1
2	9016494	(008000–010490)	Valve Kit, Replacement 12v St Flow	1
3	09738	(008000–014000)	Screw, Hex, M5 X 0.8 X 12, Ss	2
4	09739	(008000–014000)	Nut, Hex, Lock, M5 X 0.8, Nl, Ss	2
5	54333	(008000–014000)	Clamp, Hose, Wormdrive, 0.31–0.88d, .31w	2
6	1015032	(008000–014000)	Hose, Afmkt, Pvc, Brd 0.62id 08ft	1
7	63810	(008000–014000)	Clamp, Hose, Wormdrive, 0.56–1.06d, .56w	4
8	1062116	(008000–014000)	Fitting, Plstc, Tee, Bm10/Bm10/Bm10, Nyl	1
9	1075241	(010491–014000)	Valve Assy, Water, Solenoid, 12vdc	1

Fig. 6 – Side Brush Solution Control Group (014001–)

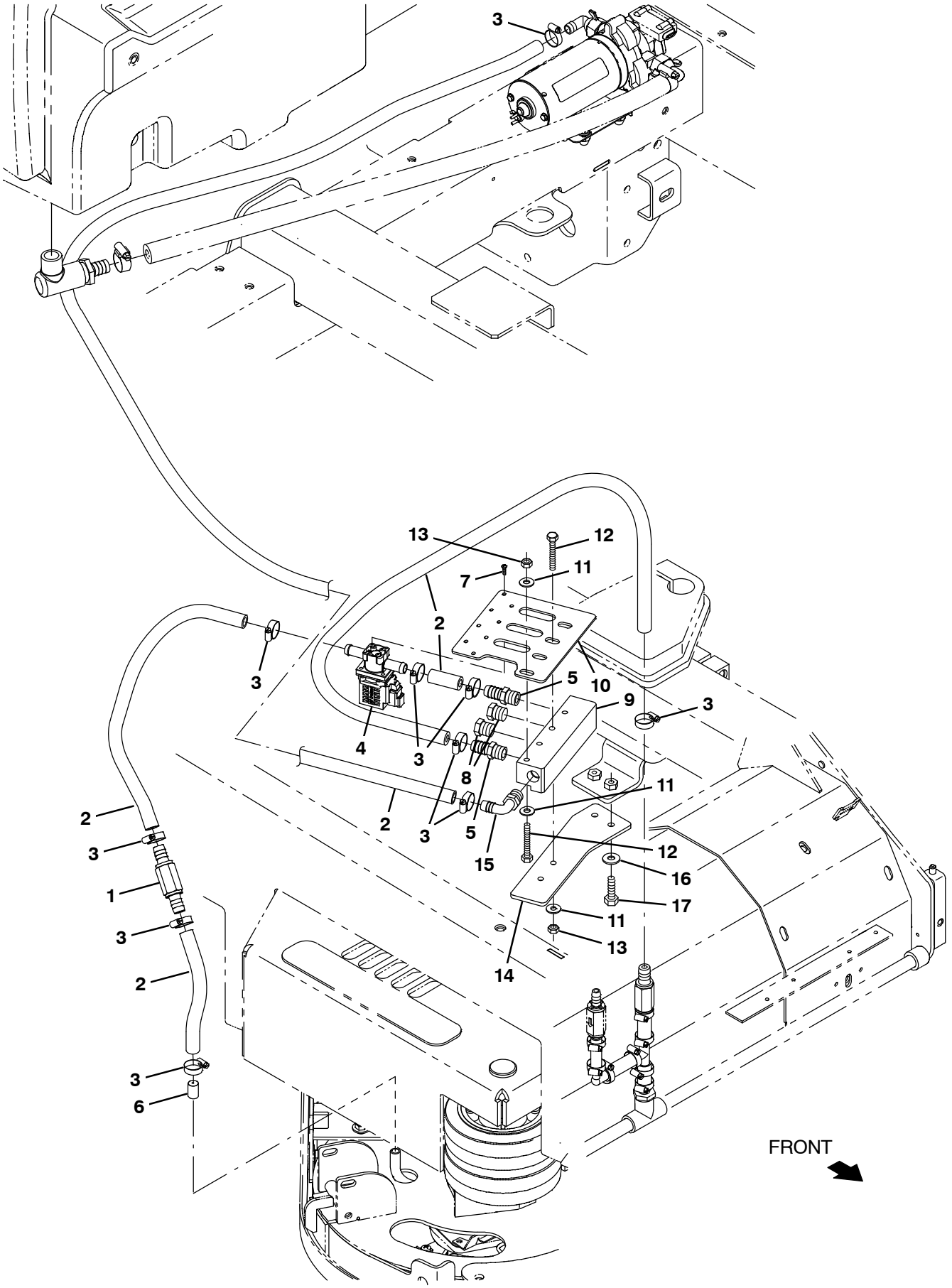

357103 – M20

Fig. 5 – Side Brush Solution Control Group (014001–)

Ref.	Part No.	Serial Number	Description	Qty.
1	1251530	(014001–)	Valve, Check, 1.0psi, Bm08/Bm08	1
2	1011412	(014001–)	Hose, Afmkt, Pvc, Brd, 0.50id, 08ft, Clr	1
3	54333	(014001–)	Clamp, Hose, Wormdrive, 0.31–0.88d, .31w	6
4	1076870	(014001–)	Valve, Water, Solenoid [12vdc, Bm08/Bm08	1
5	64743	(014001–)	Fitting, Plstc, Str, Bm08/Pm06	2
6	1256639	(014001–)	Fitting, Plastic, Rst, 3.00mm	1
7	1257563	(014001–)	Screw, Pan, Torx, 06– 19 X 0.38, F/ Plstc	2
8	630146	(014001–)	Fitting, Plug, Pm06, Hdpe	2
9	1254833	(014001–)	Manifold, Soln	1
10	1254856	(014001–)	Plate, Manifold, Mtg	1
11	32490	(014001–)	Washer, Flat, 0.25, Std	1
12	1257800	(014001–)	Screw, Hex, M6 X 1.00 X 60, Ss, Fl	4
13	08712	(014001–)	Nut, Hex, Lock, M6 X 1.00, Nl, Ss	1
14	1077124	(014001–)	Bracket, Manifold, Stratus	1
15	64778	(014001–)	Fitting, Plstc, E90, Bm08/Pm06	1
16	32491	(014001–)	Washer, Flat, 0.31, Std	2
17	39277	(014001–)	Screw, Hex, M8 X 1.25 X 25, 8.8	2

Fig. 7 – Side Brush Hydraulic Valve Group

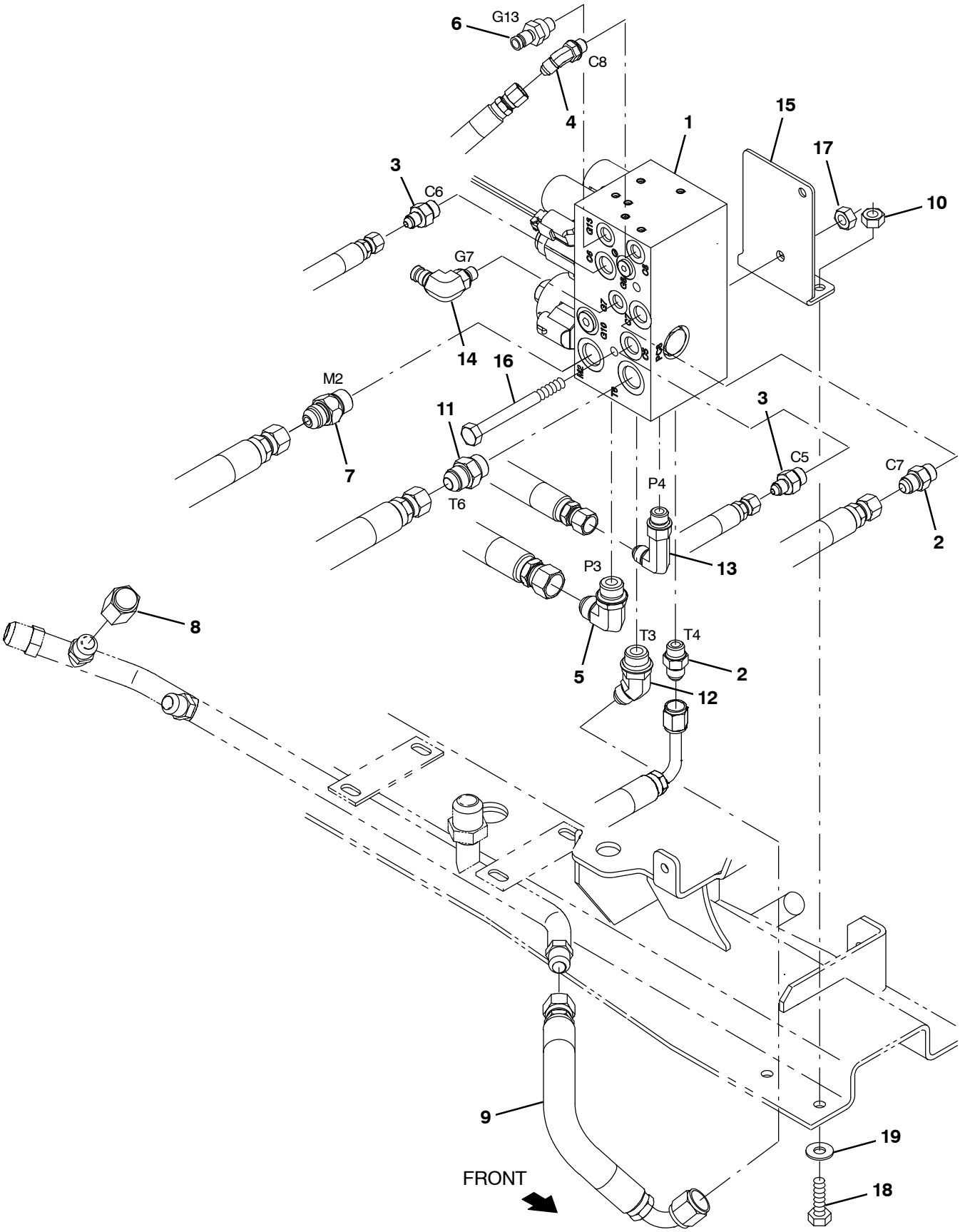

354466

Fig. 7 – Side Brush Hydraulic Valve Group

Ref.	Part No.	Serial Number	Description	Qty.
1	1072997	(008000–)	Valve, Cntrl, Hyd, Solenoid, 03/16gpm (See Breakdowns)	1
2	56690	(008000–)	Fitting, Hyd, Str, Jm06/Om06	2
3	55685	(008000–)	Fitting, Hyd, Str, Jm04/Om06	2
4	34359	(008000–)	Fitting, Hyd, E45, Jm04/Om04	1
5	44868	(008000–)	Fitting, Hyd, E90, Jm08/Om08	1
6	395973	(008000–)	Fitting, Hyd, Str, Om04/Qm04	1
7	1026119	(008000–)	Valve, Hyd, Check, Jm08/Om08 5000psi	1
8	60090	(008000–)	Fitting, Hyd, Cap, Jf08	1
9	1037011	(008000–)	Hose, Hyd, Tc08, Jf08str/Jf08e90, 012.0	1
10	08713	(008000–)	Nut, Hex, Lock, M8 X 1.25, Nl, Ss	2
11	44869	(008000–)	Fitting, Hyd, Str, Jm08/Om08	1
12	42226	(008000–)	Fitting, Hyd, E45, Jm08/Om08	1
13	71727	(008000–)	Fitting, Hyd, E90, Jf06/Jm06, Long	1
14	395974	(008000–)	Fitting, Hyd, E90, Om04/Qm04	1
15	1045272	(008000–)	Bracket, Valve, Sba [M20 And T20]	1
16	364441	(008000–)	Screw, Hex, M8 X 1.25 X 110, Ss	2
17	08709	(008000–)	Nut, Hex, Lock, M8 X 1.25, Nl	2
18	09010	(008000–)	Screw, Hex, M8 X 1.25 X 25, Ss	2
19	32491	(008000–)	Washer, Flat, 0.31, Std	2

Fig. 8 – Side Brush Hydraulic Hose Group

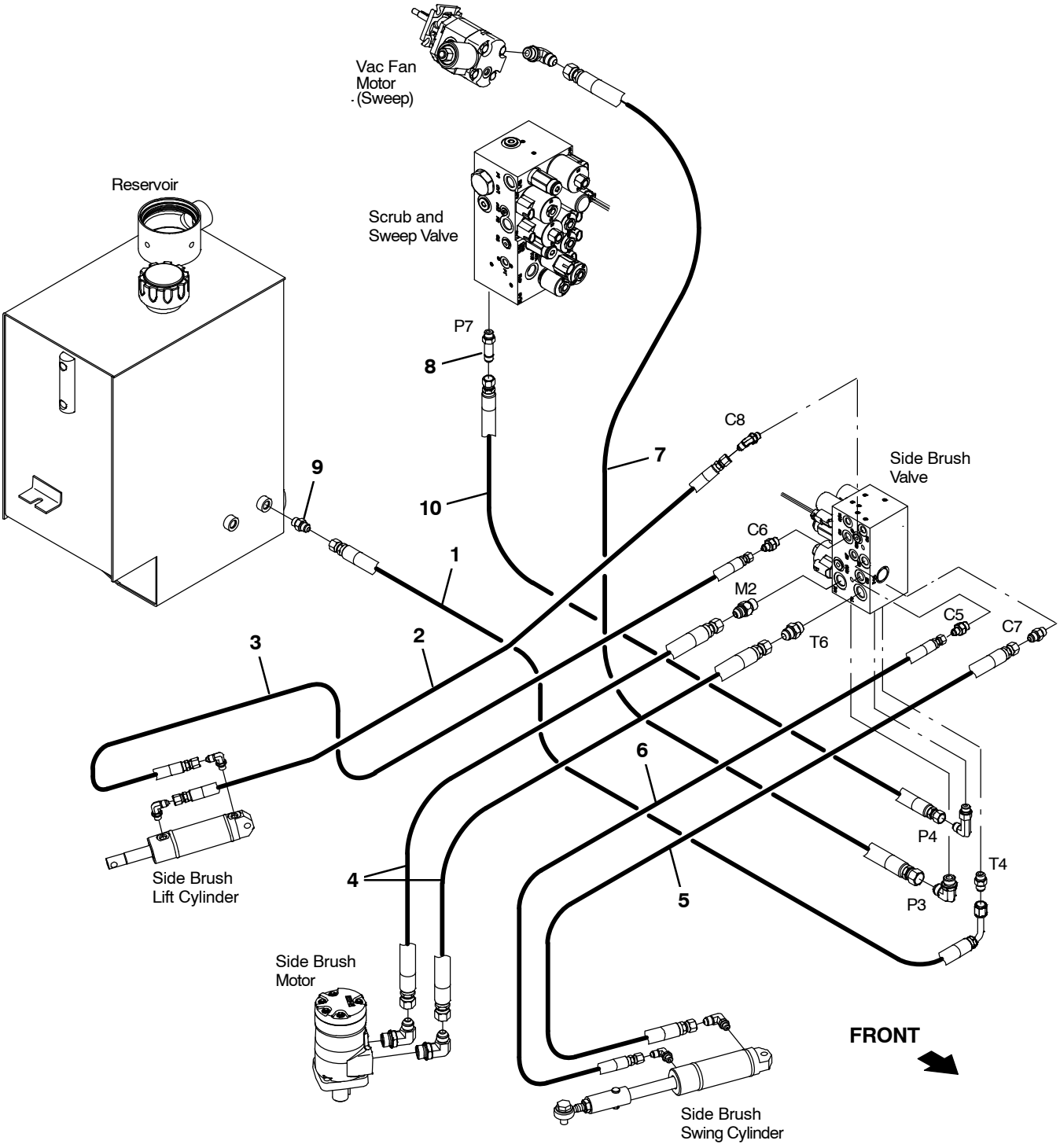

354467

Fig. 8 – Side Brush Hydraulic Hose Group

Ref.	Part No.	Serial Number	Description	Qty.
1	361047	(008000–)	Hose, Hyd, Med06, Jf06e90l/Jf06str,038.0	1
2	1023485	(008000–)	Hose, Hyd, Tc06, Jf04str/Jf04str, 033.0	1
3	1025990	(008000–)	Hose, Hyd, Tc04, Jf04str /Jf04str, 39.0	1
4	1036965	(008000–)	Hose, Hyd, Tc08, Jf08str/Jf08str, 034.0	2
5	1025991	(008000–)	Hose, Hyd, Tc06, Jf06str /Jf06str, 23.0	1
6	1025992	(008000–)	Hose, Hyd, Tc04, Jf04str /Jf04str, 20.0	1
7	1036946	(008000–)	Hose, Hyd, Tc08, Jf08str/Jf08str, 084.0	1
8	59577	(008000–)	Fitting, Hyd, Str, Jm06/Om06, Long	1
9	56690	(008000–)	Fitting, Hyd, Str, Jm06/Om06	1
10	1041389	(008000–)	Hose, Hyd, Tc06, Jf06str/Jf06str, 086.0	1

Fig. 9 – FaST Pumps and Detergent Group

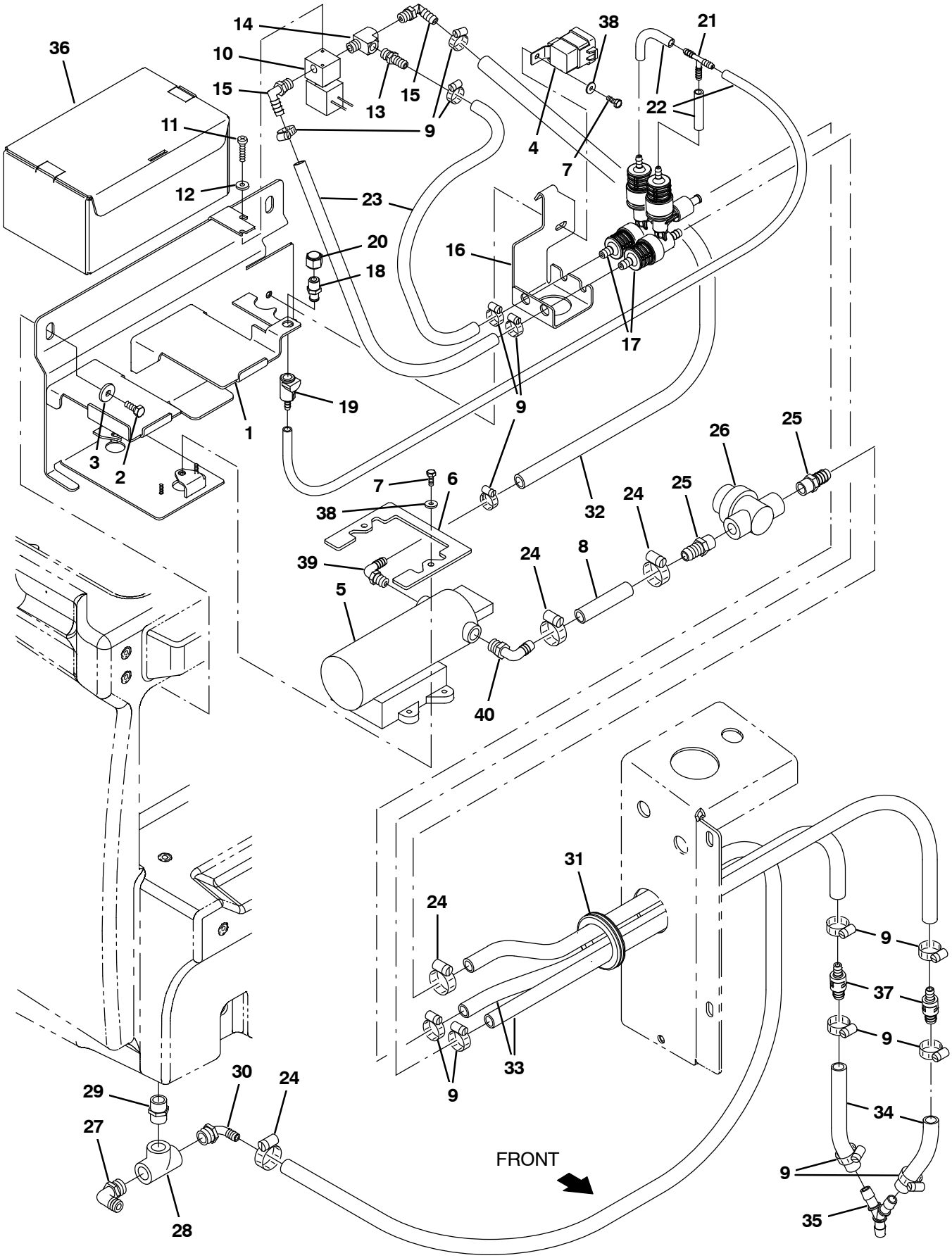

354789

Fig. 9 – FaST Pumps and Detergent Group

Ref.	Part No.	Serial Number	Description	Qty.
1	1044342	(008000–)	Bracket Wldt, Mtg [FaST Gen 2+]	1
2	09740	(008000–)	Screw, Hex, M8 X 1.25 X 20, Ss	2
3	1017218	(008000–)	Washer, Flat, 0.32b 1.00d .12, Ss	2
4	56186	(008000–)	Relay, 12vdc, 040a, Spdt No	1
5	1036801	(008000–)	Pump, Soltn, 13.7vdc, 65psi [FaST Ii+]	1
6	1039357	(008000–)	Bracket, Retainer, Pump	1
7	15678	(008000–)	Screw, Hex, M6 X 1.00 X 16, Ss	3
8	1011403	(008000–)	Hose, Afmkt, Pvc, Brd, 0.50Id, 01Ft, Clr	1
9	43844	(008000–)	Clamp, Hose, Wormdrive, 0.25–0.62d, .31w	14
10	1018098	(008000–)	Valve, Water, Solenoid, 12vdc 6.0mm Pf04	1
11	09200	(008000–)	Screw, Pan, Phl, M5 X 0.80 X 12, Ss	2
12	01683	(008000–)	Washer, Flat, 10, Ss	2
13	150540	(008000–)	Fitting, Plstc, Str, Bm06/Pm04	1
14	150709	(008000–)	Fitting, Brs, Tee, Pf04/Pf04/Pm04, Run	1
15	57248	(008000–)	Fitting, Plstc, E90, Bm06/Pm04, Nyl	2
16	1044343	(008000–)	Bracket, Mtg [FaST Gen 2+]	1
17	9008868	(008000–)	FaST Kit, Injector [M20/T20/M30 FaST III] (See Breakdowns)	2
18	1005435	(008000–)	Fitting, Plstc, Pipe, Cap, Pf04	1
19	1002898	(008000–)	Fitting, Plstc, Str, Bm04, Cplg, Fem	1
20	1002899	(008000–)	Fitting, Plstc, Str, Pm04, Cplg, Mal	2
21	150713	(008000–)	Fitting, Plstc, Tee, Bm04/Bm04/Bm04	1
22	1014986	(008000–)	Hose, Afmkt, Pvc, Clr, 0.25id, 02ft	1
23	1006416	(008000–)	Hose, Afmkt, Pvc, Clr, 0.38id, 03ft	1
24	54333	(008000–)	Clamp, Hose, Wormdrive, 0.31–0.88d, .31w	8
25	150538	(008000–)	Fitting, Plstc, Str, Bm06/Pm06	2
26	1005302	(008000–)	Filter, In–Line, Pf06/Pf06 080mesh 02.6l	1
27	73468	(008000–)	Fitting, Plstc, E90, Bm10/Pm12	1
28	42133A	(008000–)	Fitting, Plstc, Tee, Pf12/Pf12/Pf12	1
29	24544	(008000–)	Fitting, Plstc, Str, Pm12/Pm12 1.60l	1
30	1005552	(008000–)	Fitting, Plstc, E90, Bm08/Pm12, Nyl	1
31	10632–19	(008000–)	Grommet, Rbr, 2.13id, F/2.5h, .12 Matl	1
32	1006400	(008000–)	Hose, Afmkt, Pvc, Brd, 0.38id, 03ft, Clr	1
33	1024237	(008000–)	Hose, Afmkt, Pvc, Wir, 0.50id, 03ft, Clr	1
34	1014929	(008000–)	Hose, Afmkt, Pvc, Clr, 0.38id, 01ft	1
35	1010668	(008000–)	Fitting, Plstc, Y, Bm08/Bm08/Bm08, Nyl	1
36	1017022	(008000–)	Detergent, Pkg, 2 Liter, Sgl [665]	1
37	1035794	(008000–)	Valve, Check, 0005psi Bm06/Bm08	2
38	01684	(008000–)	Washer, Flat, 0.27B 0.69D .05, Ss	3
39	1049254	(008000–)	Fitting, Nyl, Qdc, E90, Bm08/ Qm10	1
40	1049259	(008000–)	Fitting, NylY, Qdc, E90, Bm06/ Qm10	1

Fig. 10 – FaST Solution Supply Group

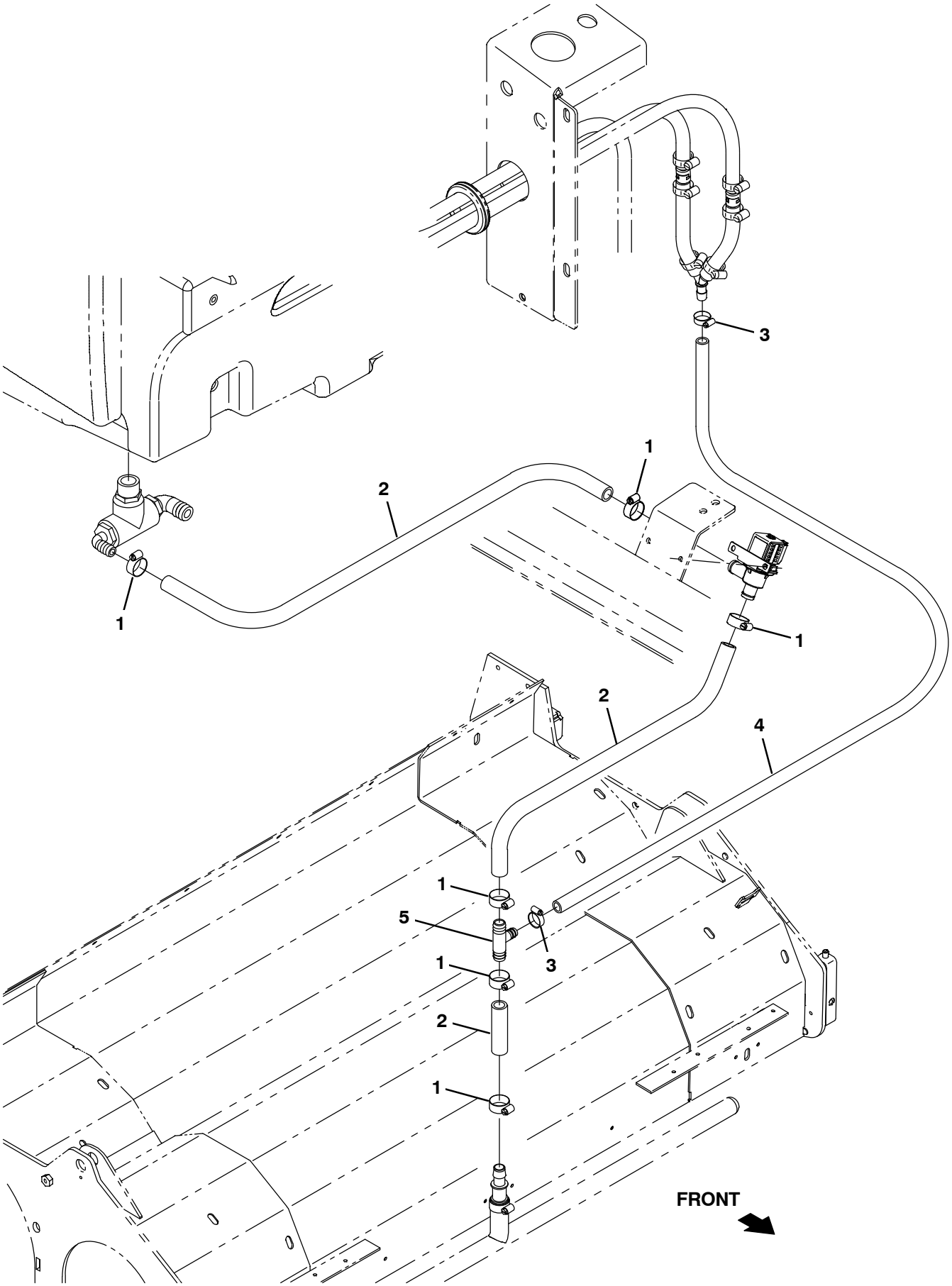

354791

Fig. 10 – FaST Solution Supply Group

Ref.	Part No.	Serial Number	Description	Qty.
1	63810	(008000–)	Clamp, Hose, Wormdrive, 0.56–1.06d, .56w	6
2	1015032	(008000–)	Hose, Afmkt, Pvc, Brd, 0.62id, 08ft, Clr	1
3	54333	(008000–)	Clamp, Hose, Wormdrive, 0.31–0.88d, .31w	2
4	1011412	(008000–)	Hose, Afmkt, Pvc, Brd, 0.50id, 08ft, Clr	1
5	1015486	(008000–)	Fitting, Plstc, Tee, Bm08/Bm10/Bm10, Br	1

Fig. 11 – FaST Solution Supply Group with Side Brush

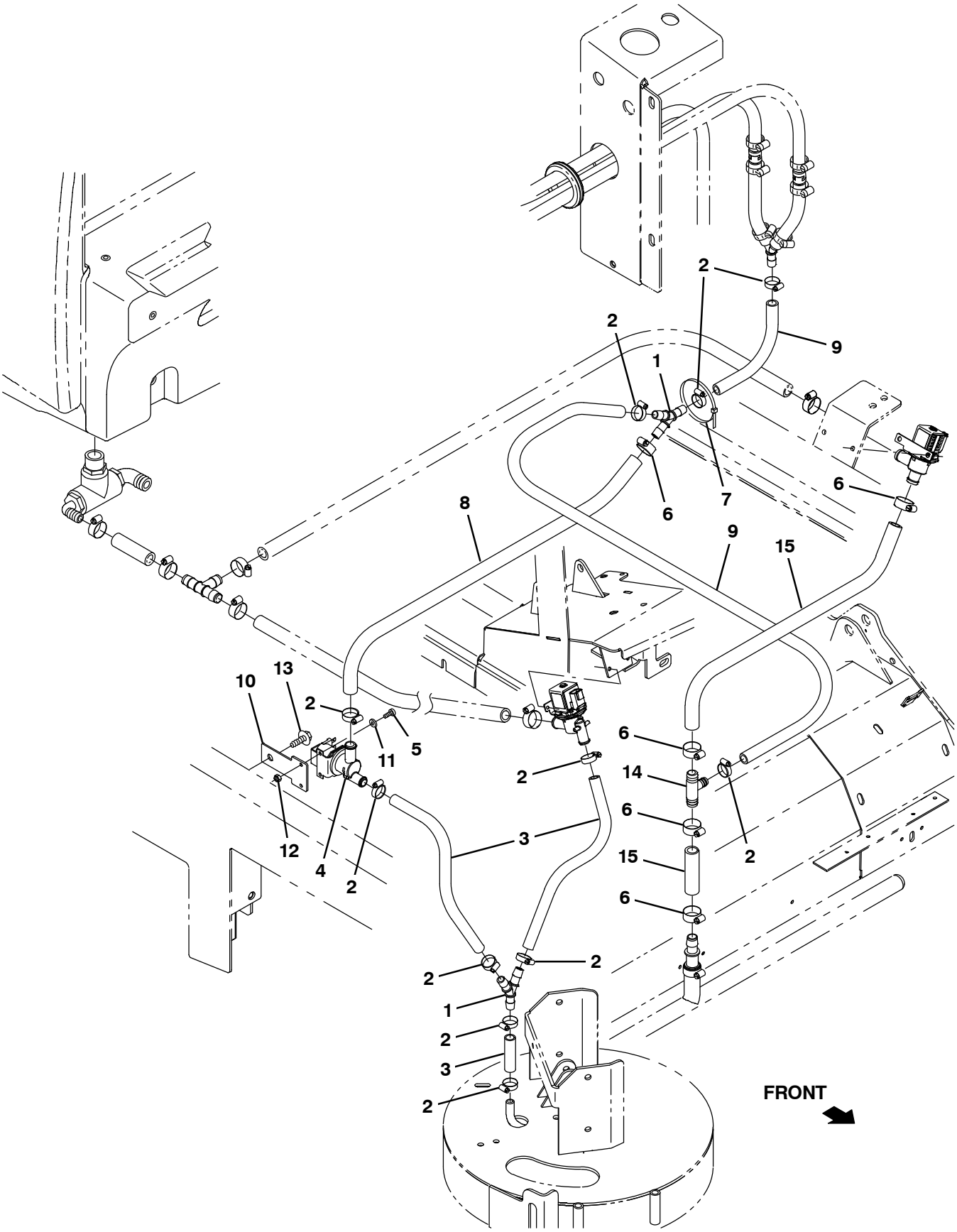

354792

Fig. 11 – FaST Solution Supply Group with Side Brush

Ref.	Part No.	Serial Number	Description	Qty.
1	1010668	(008000–)	Fitting, Plstc, Y, Bm08/Bm08/Bm08, Nyl	2
2	54333	(008000–)	Clamp, Hose, Wormdrive, 0.31–0.88d, .31w	11
3	1015067	(008000–)	Hose, Afmkt, Pvc, Clr, 0.50id, 08ft	1
4	1037825	(008000–)	Valve, Solenoid, 12vdc, Water Flow	1
5	09200	(008000–)	Screw, Pan, Phl, M5 X 0.80 X 12, Ss	2
6	63810	(008000–)	Clamp, Hose, Wormdrive, 0.56–1.06d, .56w	5
7	763116	(008000–)	Tie, Cable, Nyl, 15.3l . W 4.5 Max D	1
8	31543	(008000–)	Hose, Heater, E90, 0.62id, 24.0 4.0	1
9	1011412	(008000–)	Hose, Afmkt, Pvc, Brd, 0.50id, 08ft, Clr	1
10	1030511	(008000–)	Plate, Mtg, Valve	1
11	01683	(008000–)	Washer, Flat, 10, Ss	2
12	09739	(008000–)	Nut, Hex, Lock, M5 X 0.80, Nl, Ss	2
13	76099	(008000–)	Screw, Hex, M8 X 1.25 X 25, Fmg	1
14	1015486	(008000–)	Fitting, Plstc, Tee, Bm08/Bm10/Bm10, Br	1
15	1015026	(008000–)	Hose, Afmkt, Pvc, Brd, 0.62id, 03ft, Clr	1

Fig. 12 – FaST Wire Harness Group

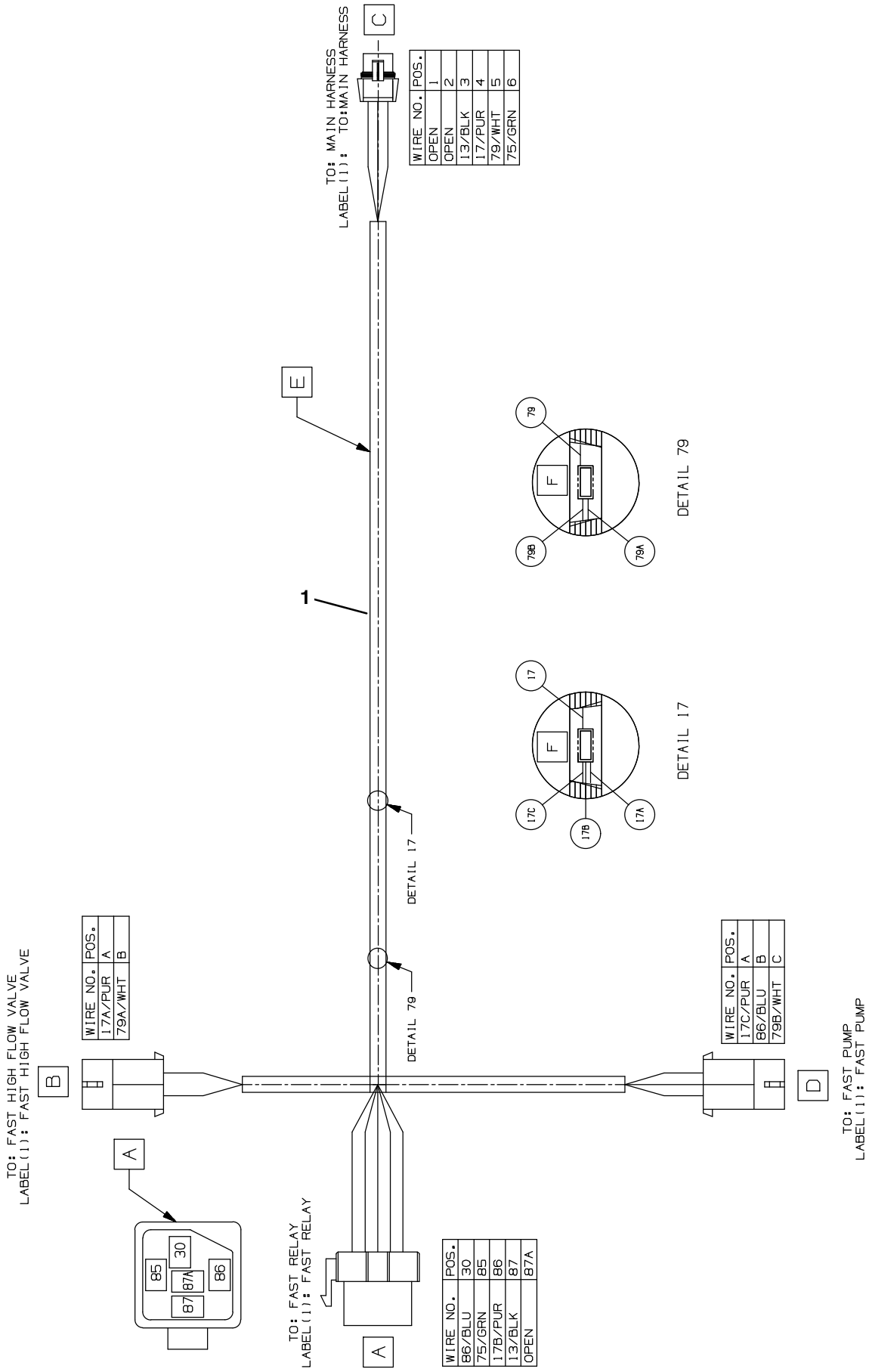

356682 – M20, T20

Fig. 12 – FaST Wire Harness Group

Ref.	Part No.	Serial Number	Description	Qty.
1	1075138	(008000–)	Harness, Wire [FaST Gen 2, M20/T20]	1

Fig. 13 – ec–H20 Solution Pump Group

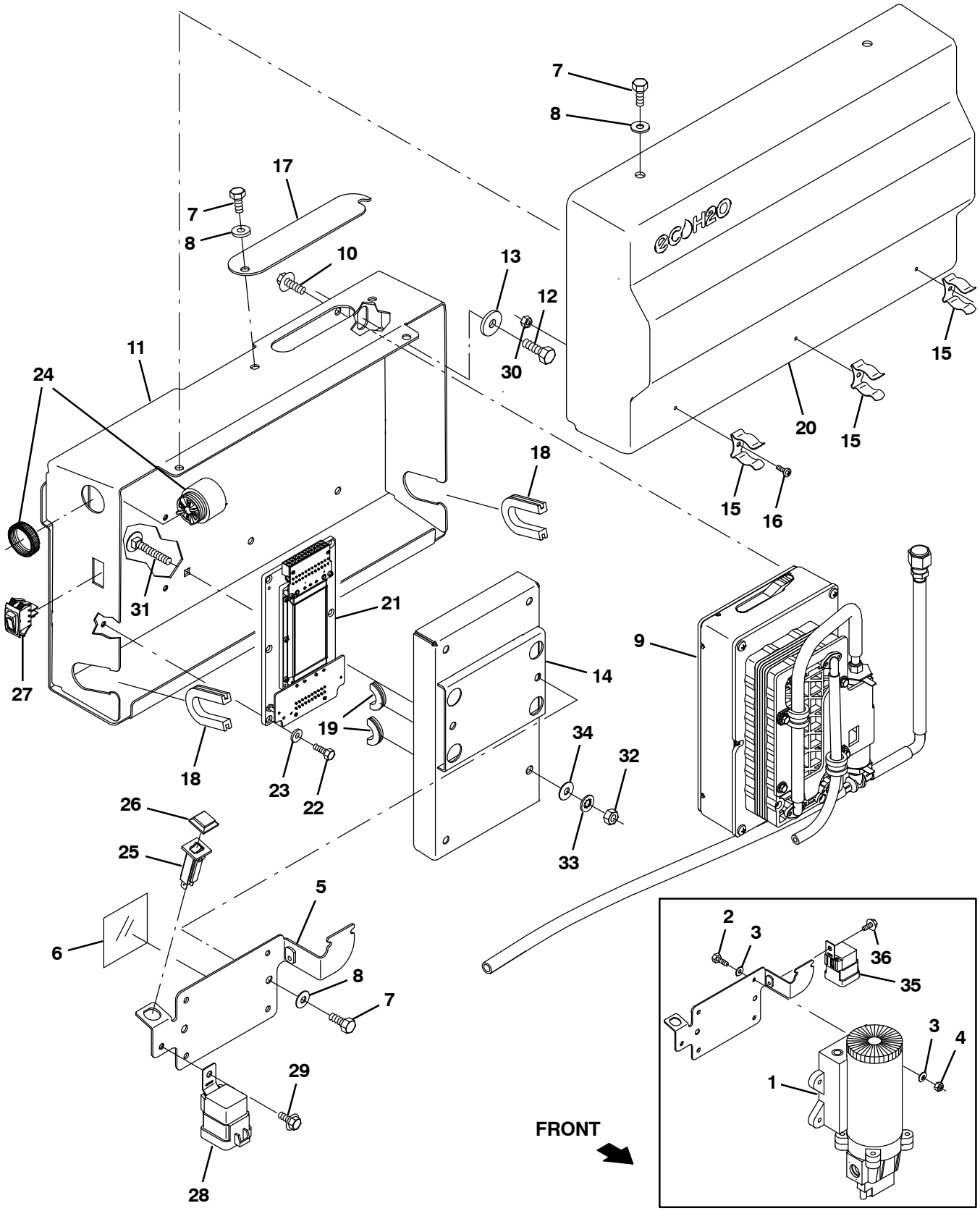

356033

Fig. 13 – ec–H20 Solution Pump Group

Ref.	Part No.	Serial Number	Description	Qty.
1	1060624	(008000–014000)	Pump, Soltn, Ele, 13.7vdc,12/28psi	1
2	09252	(008000–014000)	Screw, Hex, M5 X 0.80 X 20, 8.8	4
3	19066	(008000–014000)	Washer, Flat, 10	8
4	06549	(008000–014000)	Nut, Hex, Lock, M5 X 0.80, Nl	4
5	1060273	(008000–)	Plate, Mtg, Pump	1
6	1059677	(008000–)	Strip, Rbr, 0.06 03.54w 03.5l [Neo/60]	1
7	09744	(008000–)	Screw, Hex, M6 X 1.00 X 12, Ss	6
8	01684	(008000–)	Washer, Flat, 0.27b 0.69d .05, Ss	6
9	9007882	(008000–)	Module Kit, Replmt [Ec–H20] (See Breakdowns)	1
10	1040467	(008000–)	Screw, Hex, M6 X 1.00 X 20, 9.8, Sems	4
11	1060292	(008000–)	Plate Wldt, Mtg	1
12	09740	(008000–)	Screw, Hex, M8 X 1.25 X 20, Ss	2
13	1017218	(008000–)	Washer, Flat, 0.32b 1.00d .12, Ss	2
14	1060185	(008000–)	Cover Wldt, Power Supply	1
15	1029057	(008000–)	Clip, Grip, Finger, 0.88–1.25d	3
16	12323	(008000–)	Screw, Pan, Phl, M4 X 0.70 X 20, Ss	3
17	1060291	(008000–)	Plate, Inspection	1
18	1020168	(008000–)	Molding, Afmkt, Trim, Pvc, .08 .11, 01Ft	1
19	10632–4	(008000–)	Grommet, Rbr, 0.62id, F/0.9h, .06 Matl	1
20	1060719	(008000–)	Cover, Trimmed	1
21	1247720	(008000–)	Circuitboard Assy [Dc To Dc Conv.]	1
22	09206	(008000–)	Screw, Hex, M4 X 0.70 X 12, 8.8	4
23	19065	(008000–)	Washer, Flat, 08	4
24	1052726	(008000–)	Alarm, 9–48vdc, 95 Db(A) [Ec–H20]	1
25	1064183	(008000–)	Circuitbreaker, 02.0a, Resetable	1
26	1064191	(008000–)	Boot, Circuitbreaker	1
27	1044393	(008000–)	Switch, Rocker, Spst, Mom	1
28	56186	(008000–)	Relay, 12vdc, 040a, Spdt No	1
29	223198	(008000–)	Screw, Hex, M5 X 0.80 X 10, Fmg	1
30	33932	(008000–)	Nut, Hex, Lock, M4 X 0.70, Nl, Ss	3
31	1062804	(008000–)	Bolt, Carriage, M06 X 1.00 X 40, 4.6	4
32	41359	(000000)	Nut, Hex, Std, M6 X 1.00, 8	4
33	32982	(000000)	Washer, Lock, Int, 0.25	4
34	32483	(000000)	Washer, Flat, 0.25, Sae	4
35	56186	(008000–014000)	Relay, 12vdc, 040a, Spdt No	1
36	223198	(008000–014000)	Screw, Hex, M5 X 0.80 X 10, Fmg	1

Fig. 14 – ec–H20 Solution Pump Supply Group (008000–014000)

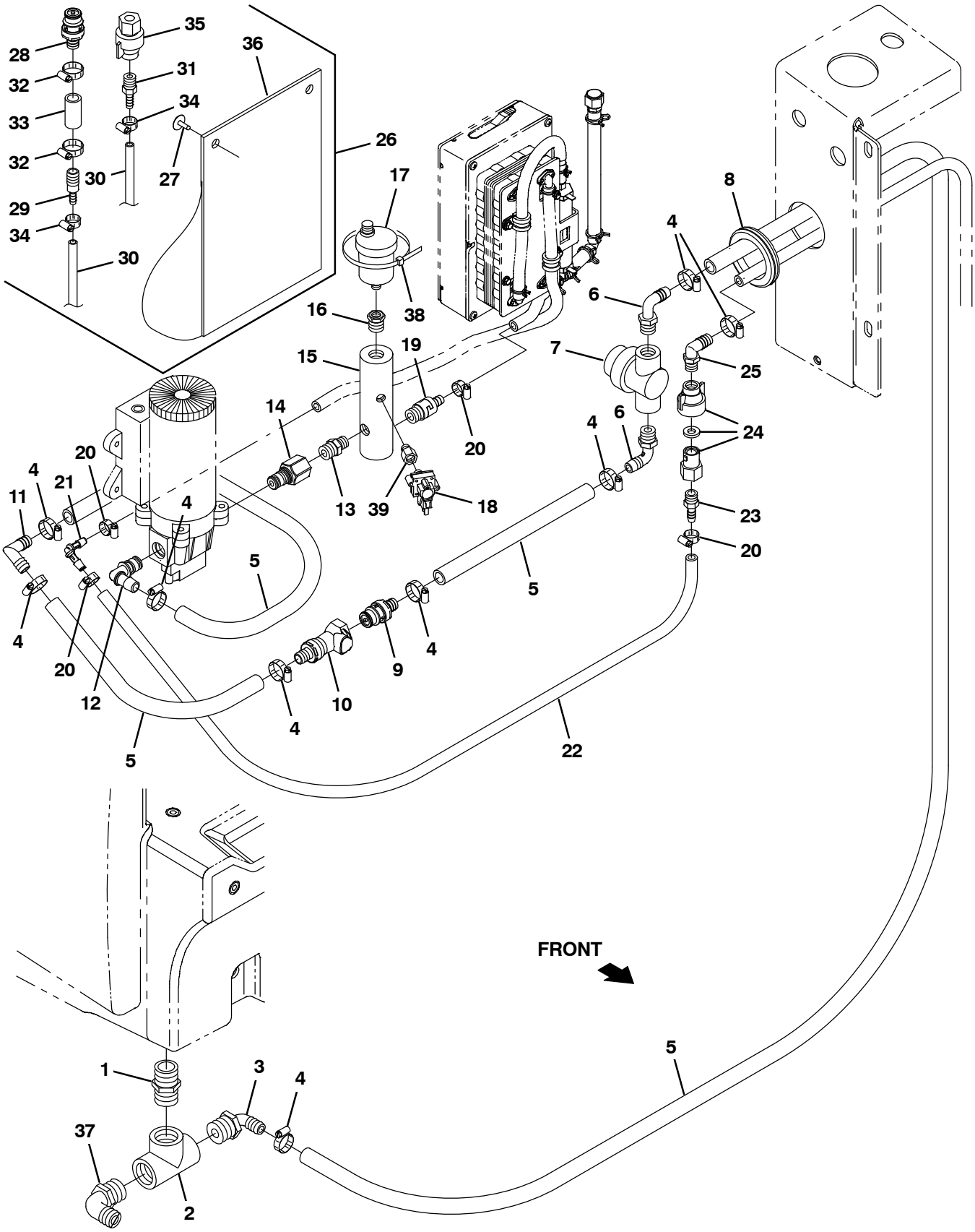

356034

Fig. 14 – ec–H20 Solution Pump Supply Group (008000–014000)

	Ref.	Part No.	Serial Number	Description	Qty.
	1	24544	(008000–014000)	Fitting, Plstc, Str, Pm12/Pm12 1.60l	1
	2	42133A	(008000–014000)	Fitting, Plstc, Tee, Pf12/Pf12/Pf12	1
	3	1005552	(008000–014000)	Fitting, Plstc, E90, Bm08/Pm12, Nyl	1
	4	54333	(008000–014000)	Clamp, Hose, Wormdrive, 0.31–0.88d, .31w	9
	5	1011837	(008000–014000)	Hose, Afmkt, Pvc, Brd, 0.50id, 12ft, Clr	1
	6	64778	(008000–014000)	Fitting, Plstc, E90, Bm08/Pm06	2
	7	1005302	(008000–014000)	Filter, In–Line, Pf06/Pf06 080mesh 02.6l	1
	8	10632–19	(008000–014000)	Grommet, Rbr, 2.13id, F/2.5h, .12 Matl	3
	9	1017415	(008000–014000)	Insert, Cplg, Qm, Bm08	1
	10	1017413	(008000–014000)	Housing, Cplg, Qf / Pm08	1
	11	63987–1	(008000–014000)	Fitting, Plstc, E90, Bm08/Bm08	1
	12	1049254	(008000–014000)	Fitting, Nyl, Qdc, E90, Bm08/ Qm10	1
	13	1059372	(008000–014000)	Fitting, Plstc, Str, Pf06/Qm10, Pvc	1
	14	1005219	(008000–014000)	Fitting, Plstc, Str, Pm04/Pm06, Nyl	1
	15	1060596	(008000–014000)	Manifold, Water	1
	16	24698	(008000–014000)	Fitting, Brs, Str, Pf02/Pm06	1
	17	1017386	(008000–014000)	Valve, Vent, Air, Float Type	1
	18	1058935	(008000–014000)	Switch, Press, 50 Psi, Pm02	1
	19	1060693	(008000–014000)	Valve, Check, 0005psi Pm04/Bm06	1
	20	43844	(008000–014000)	Clamp, Hose, Wormdrive, 0.25–0.62d, .31w	4
	21	1059391	(008000–014000)	Fitting, Plstc, E90, Bm05/Bm05, Nyl	1
	22	1052336	(008000–014000)	Hose, Afmkt, PVC, Brd, 0.31Id, 03Ft, Clr	2
	23	1052017	(008000–014000)	Fitting, Plstc, Str, Bm05/Pm04	1
	24	1071280	(008000–014000)	Fitting Assy, Qdc, Pf04	1
	25	65581	(008000–014000)	Fitting, Plstc, E90, Bm08/Pm04	1
▽	26	9014281	(008000–014000)	ec–H2O Kit, Flush, Replmt[M20, M30&T20]	1
▲	27	72968	(008000–014000)	Rivet, Plstc, .250d X 0.90	2
▲	28	1017415	(008000–014000)	Insert, Cplg, Qm, Bm08	1
▲	29	630164	(008000–014000)	Fitting, Plstc, Str, Bm04/Bm08	1
▲	30	1006415	(008000–014000)	Hose, Afmkt, Pvc, Clr, 0.25id, 03ft	2
▲	31	50901	(008000–014000)	Fitting, Plstc, Str, Bm04/Pm04	1
▲	32	54333	(008000–014000)	Clamp, Hose, Wormdrive, 0.31–0.88d, .31w	2
▲	33	1011403	(008000–014000)	Hose, Afmkt, Pvc, Brd, 0.50id, 01ft, Clr	1
▲	34	43844	(008000–014000)	Clamp, Hose, Wormdrive, 0.25–0.62d, .31w	2
▲	35	1071280	(008000–014000)	Fitting Assy, Qdc, Pf04	1
▲	36	48790	(008000–014000)	Pouch	1
	37	73468	(008000–014000)	Fitting, Plstc, E90, Bm10/Pm12	1
	38	49266	(008000–014000)	Tie, Cable, Nyl, 07.3l .19w 1.8 Max D	1
	39	1062403	(008000–014000)	Fitting, Brs, Snubber, Pm02/Pf02	1

Fig. 15 – ec–H20 Solution Pump Supply Group (014001–)

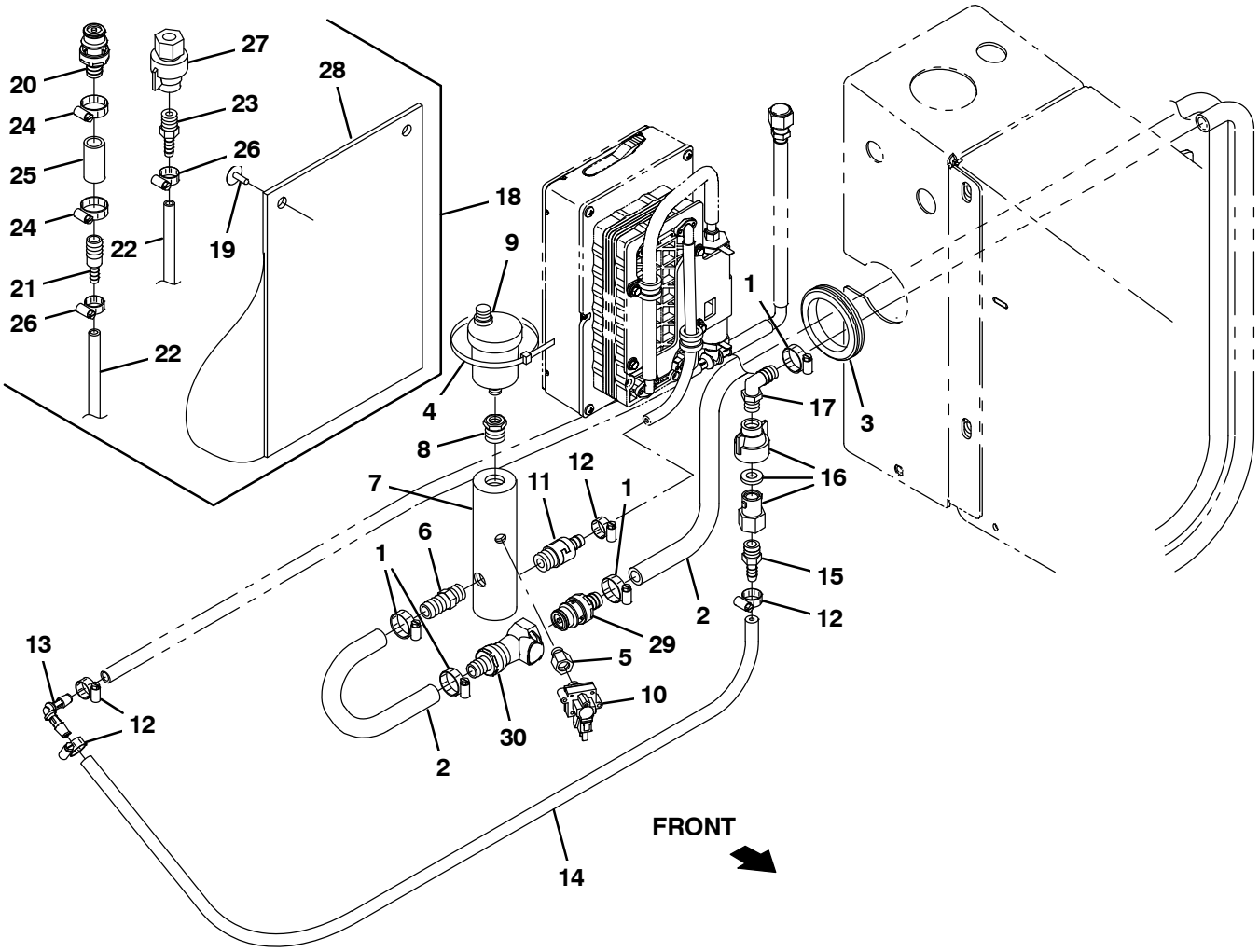

357104

Fig. 15 – ec–H20 Solution Pump Supply Group (014001–)

	Ref.	Part No.	Serial Number	Description	Qty.
	1	54333	(014001–)	Clamp, Hose, Wormdrive, 0.31–0.88d, .31w	2
	2	1011837	(014001–)	Hose, Afmkt, Pvc, Brd, 0.50id, 12ft, Clr	1
	3	10632–19	(014001–)	Grommet, Rbr, 2.13id, F/2.5h, .12 Matl	1
	4	49266	(014001–)	Tie, Cable, Nyl, 07.3l .19w 1.8 Max D	1
	5	1062403	(014001–)	Fitting, Brs, Snubber, Pm02/Pf02	1
	6	48610	(014001–)	Fitting, Plstc, Str, Bm08/Pm04	1
	7	1060596	(014001–)	Manifold, Water	1
	8	24698	(014001–)	Fitting, Brs, Str, Pf02/Pm06	1
	9	1017386	(014001–)	Valve, Vent, Air, Float Type	1
	10	1058935	(014001–)	Switch, Press, 50 Psi, Pm02	1
	11	1060693	(014001–)	Valve, Check, 0005psi Pm04/Bm06	1
	12	43844	(014001–)	Clamp, Hose, Wormdrive, 0.25–0.62d, .31w	4
	13	1059391	(014001–)	Fitting, Plstc, E90, Bm05/Bm05, Nyl	1
	14	1052336	(014001–)	Hose, Afmkt, PVC, Brd, 0.31Id, 03Ft, Clr	1
	15	1052017	(014001–)	Fitting, Plstc, Str, Bm05/Pm04	1
	16	1071280	(014001–)	Fitting Assy, Qdc, Pf04	1
	17	65581	(014001–)	Fitting, Plstc, E90, Bm08/Pm04	1
▽	18	9014281	(014001–)	ec–H2O Kit, Flush, Replmt[M20, M30&T20]	1
▲	19	72968	(014001–)	Rivet, Plstc, .250d X 0.90	2
▲	20	1017415	(014001–)	Insert, Cplg, Qm, Bm08	1
▲	21	630164	(014001–)	Fitting, Plstc, Str, Bm04/Bm08	1
▲	22	1006415	(014001–)	Hose, Afmkt, Pvc, Clr, 0.25id, 03ft	2
▲	23	50901	(014001–)	Fitting, Plstc, Str, Bm04/Pm04	1
▲	24	54333	(014001–)	Clamp, Hose, Wormdrive, 0.31–0.88d, .31w	2
▲	25	1011403	(014001–)	Hose, Afmkt, Pvc, Brd, 0.50id, 01ft, Clr	1
▲	26	43844	(014001–)	Clamp, Hose, Wormdrive, 0.25–0.62d, .31w	2
▲	27	1071280	(014001–)	Fitting Assy, Qdc, Pf04	1
▲	28	48790	(014001–)	Pouch	1
	29	1017415	(014001–)	Insert, Cplg, Qm, Bm08	1
	30	1017413	(014001–)	Housing, Cplg, Qf / Pm08	1

Fig. 16 – ec–H20 Solution Supply Group (008000–014000)

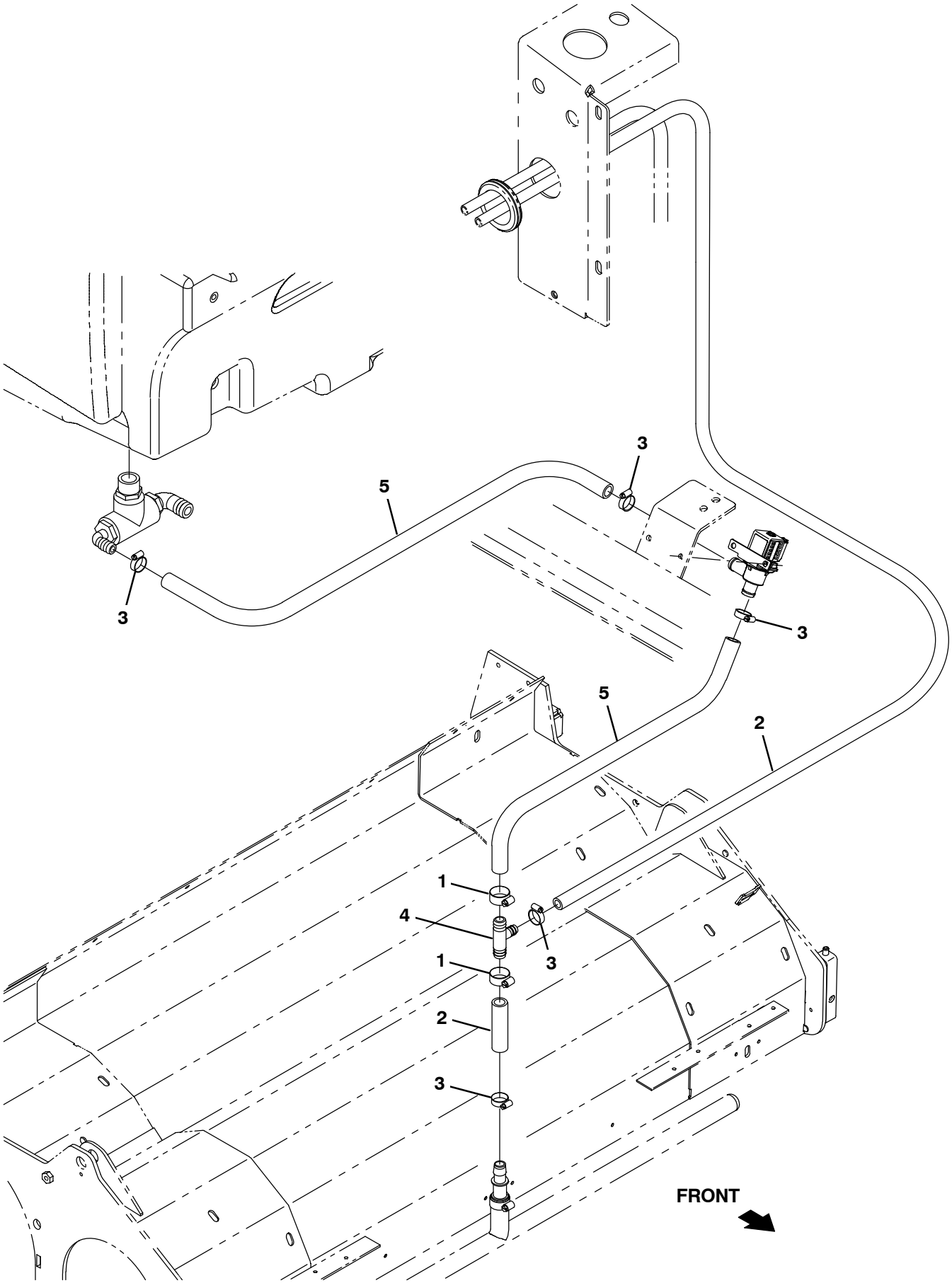

356037

Fig. 16 – ec–H20 Solution Supply Group (008000–014000)

Ref.	Part No.	Serial Number	Description	Qty.
1	63810	(008000–014000)	Clamp, Hose, Wormdrive, 0.56–1.06d, .56w	2
2	1011837	(008000–014000)	Hose, Afmkt, Pvc, Brd, 0.50id, 12ft, Clr	1
3	54333	(008000–014000)	Clamp, Hose, Wormdrive, 0.31–0.88d, .31w	5
4	1015486	(008000–014000)	Fitting, Plstc, Tee, Bm08/Bm10/Bm10, Br	1
5	1015032	(008000–014000)	Hose, Afmkt, Pvc, Brd, 0.62id, 08ft, Clr	1

Fig. 17 – ec–H20 Solution Supply Group (014001–)

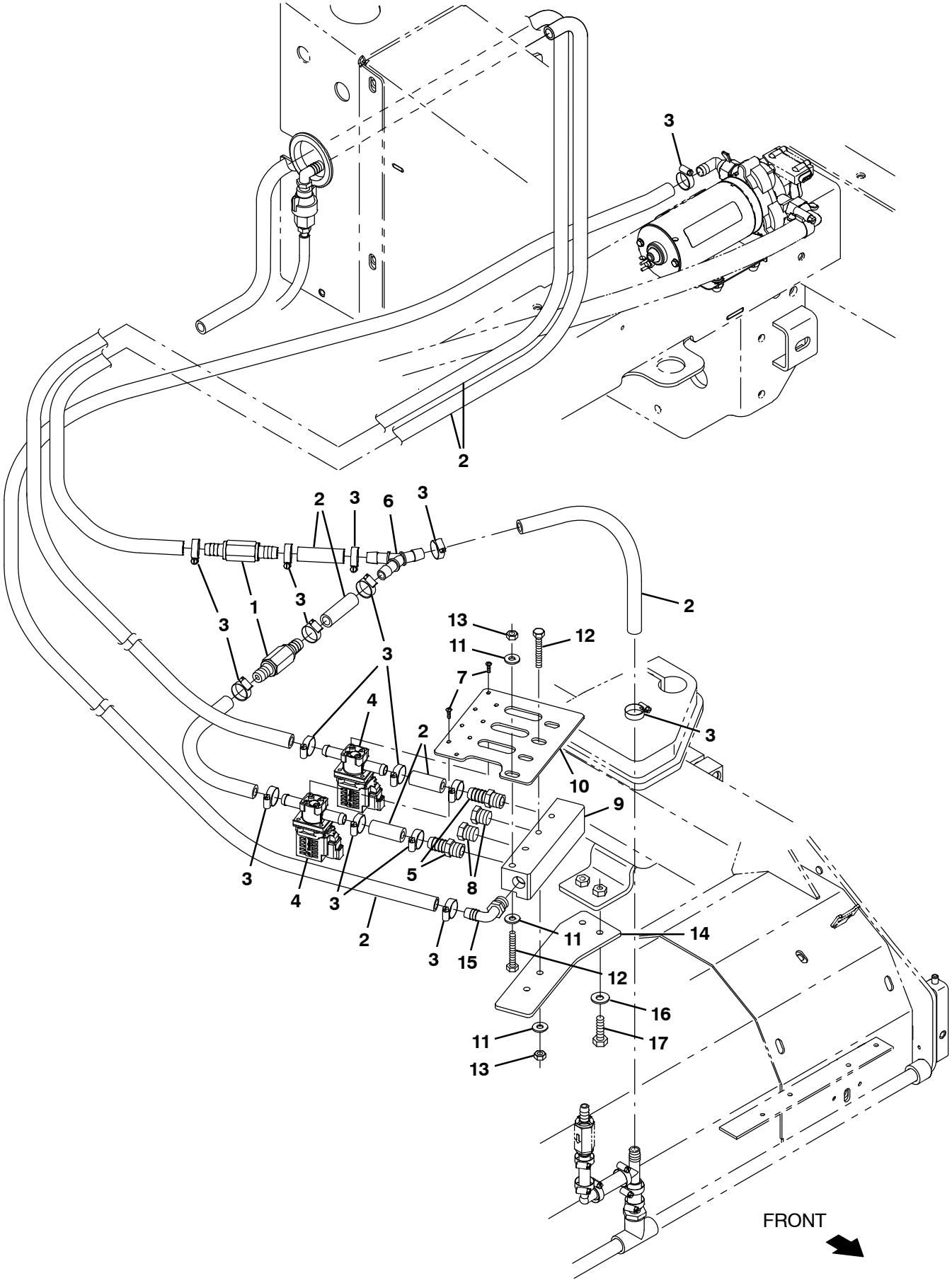

357101 – M20

Fig. 17 – ec–H20 Solution Supply Group (014001–)

Ref.	Part No.	Serial Number	Description	Qty.
1	1251530	(014001–)	Valve, Check, 1.0psi, Bm08/Bm08	2
2	1011412	(014001–)	Hose, Afmkt, Pvc, Brd, 0.50id, 08ft, Clr	2
3	54333	(014001–)	Clamp, Hose, Wormdrive, 0.31–0.88d, .31w	6
4	1076870	(014001–)	Valve, Water, Solenoid [12vdc, Bm08/Bm08	2
5	64743	(014001–)	Fitting, Plstc, Str, Bm08/Pm06	2
6	1010668	(014001–)	Fitting, Plstc, Y, Bm08/Bm08/Bm08, Nyl	1
7	1257563	(014001–)	Screw, Pan, Torx, 06–19 X 0.38, F/ Plstc	4
8	630146	(014001–)	Fitting, Plug, Pm06, Hdpe	2
9	1254833	(014001–)	Manifold, Soln	1
10	1254856	(014001–)	Plate, Manifold, Mtg	1
11	32490	(014001–)	Washer, Flat, 0.25, Std	1
12	1257800	(014001–)	Screw, Hex, M6 X 1.00 X 60, Ss, Fl	4
13	08712	(014001–)	Nut, Hex, Lock, M6 X 1.00, Nl, Ss	1
14	1077124	(014001–)	Bracket, Manifold, Stratus	1
15	64778	(014001–)	Fitting, Plstc, E90, Bm08/Pm06	1
16	32491	(014001–)	Washer, Flat, 0.31, Std	2
17	39277	(014001–)	Screw, Hex, M8 X 1.25 X 25, 8.8	2

Fig. 18 – ec–H20 Solution Supply Group with Side Brush (008000–014000)

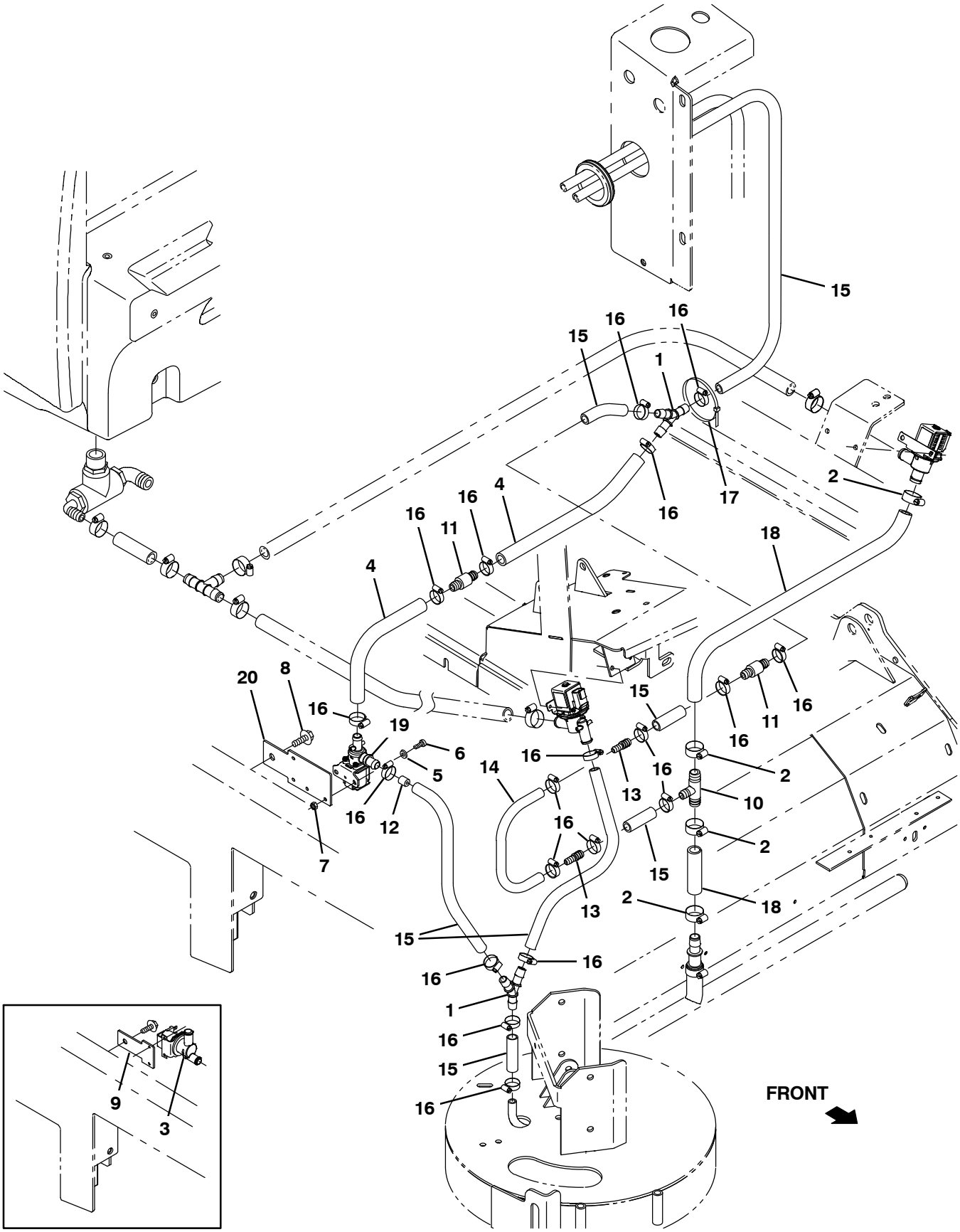

356038

Fig. 18 – ec–H20 Solution Supply Group with Side Brush (008000–014000)

Ref.	Part No.	Serial Number	Description	Qty.
1	1010668	(008000–014000)	Fitting, Plstc, Y, Bm08/Bm08/Bm08, Nyl	1
2	63810	(008000–014000)	Clamp, Hose, Wormdrive, 0.56–1.06d, .56w	4
3	9021167	(008000–012081)	Valve Kit, Water, Replmt	1
4	31543	(008000–014000)	Hose, Heater, E90, 0.62id, 24.0 4.0	1
5	01683	(008000–014000)	Washer, Flat, 10, Ss	2
6	24196	(008000–014000)	Screw, Pan, Phl, M5 X 0.80 X 20, Ss	2
7	09739	(008000–014000)	Nut, Hex, Lock, M5 X 0.80, Nl, Ss	2
8	76099	(008000–014000)	Screw, Hex, M8 X 1.25 X 25, Fmg	1
9	1030511	(008000–012081)	Plate, Mtg, Valve	1
10	1015486	(008000–014000)	Fitting, Plstc, Tee, Bm08/Bm10/Bm10, Br	1
11	1010614	(008000–014000)	Valve, Check, 2gpm .5psi Bm08/Bm08	2
12	1061045	(008000–014000)	Plug, Restrictor	1
13	222375	(008000–014000)	Fitting, Plstc, Str, Bm06/Bm08	2
14	1014974	(008000–014000)	Hose, Afmkt, Pvc, Brd, 0.38id, 02ft, Clr	1
15	1011412	(008000–014000)	Hose, Afmkt, Pvc, Brd, 0.50id, 08ft, Clr	1
16	54333	(008000–014000)	Clamp, Hose, Wormdrive, 0.31–0.88d, .31w	18
17	763116	(008000–014000)	Tie, Cable, Nyl, 15.3l . W 4.5 Max D	1
18	1015026	(008000–014000)	Hose, Afmkt, Pvc, Brd, 0.62id, 03ft, Clr	1
19	1076824	(012082–014000)	Valve Assy, Water, Solenoid, 12vdc	1
20	1076793	(012082–014000)	Plate, Mtg, Valve	1

Fig. 19 – ec–H20 Solution Supply Group with Side Brush (014001–)

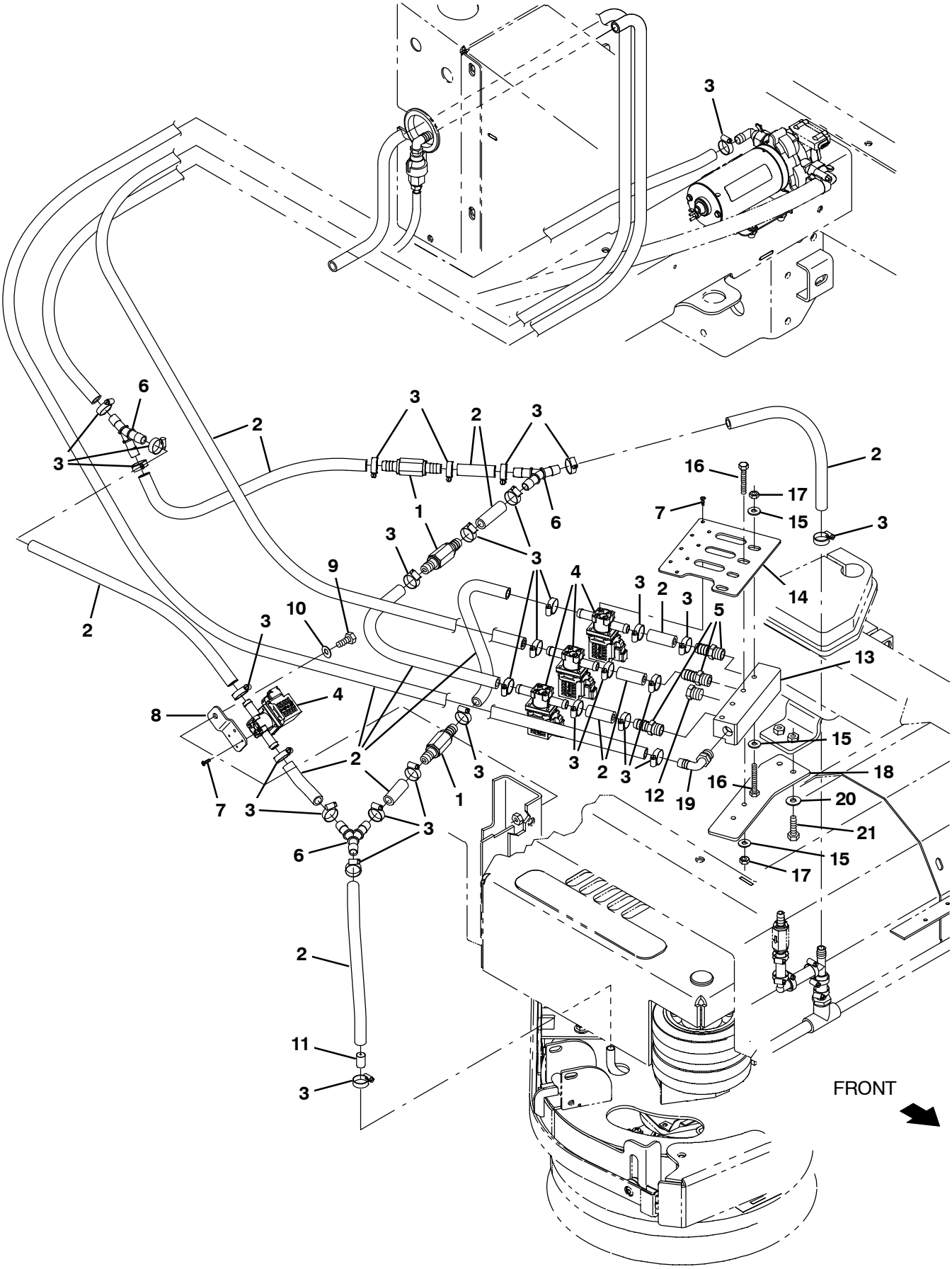

357102 – M20

Fig. 19 – ec–H20 Solution Supply Group with Side Brush (014001–)

Ref.	Part No.	Serial Number	Description	Qty.
1	1251530	(014001–)	Valve, Check, 1.0psi, Bm08/Bm08	3
2	1011835	(014001–)	Hose, Afmkt, Pvc, Brd, 0.50id, 20ft, Clr	2
3	54333	(014001–)	Clamp, Hose, Wormdrive, 0.31–0.88d, .31w	30
4	1076870	(014001–)	Valve, Water, Solenoid [12vdc, Bm08/Bm08	4
5	64743	(014001–)	Fitting, Plstc, Str, Bm08/Pm06	3
6	1010668	(014001–)	Fitting, Plstc, Y, Bm08/Bm08/Bm08, Nyl	3
7	1257563	(014001–)	Screw, Pan, Torx, 06–19 X 0.38, F/ Plstc	8
8	1256174	(014001–)	Bracket, Solenoid, Ech2o	1
9	09740	(014001–)	Screw, Hex, M8 X 1.25 X 20, Ss	1
10	01685	(014001–)	Washer, Flat, 0.38b 0.88d .08, Ss	1
11	1256639	(014001–)	Fitting, Plastic, Rst, 3.00mm	1
12	630146	(014001–)	Fitting, Plug, Pm06, Hdpe	1
13	1254833	(014001–)	Manifold, Soln	1
14	1254856	(014001–)	Plate, Manifold, Mtg	1
15	32490	(014001–)	Washer, Flat, 0.25, Std	6
16	1257800	(014001–)	Screw, Hex, M6 X 1.00 X 60, Ss, Fl	4
17	08712	(014001–)	Nut, Hex, Lock, M6 X 1.00, Nl, Ss	4
18	1077124	(014001–)	Bracket, Manifold, Stratus	1
19	64778	(014001–)	Fitting, Plstc, E90, Bm08/Pm06	1
20	32491	(014001–)	Washer, Flat, 0.31, Std	2
21	39277	(014001–)	Screw, Hex, M8 X 1.25 X 25, 8.8	2

Fig. 20 – ec–H20 Wire Harnesses Group

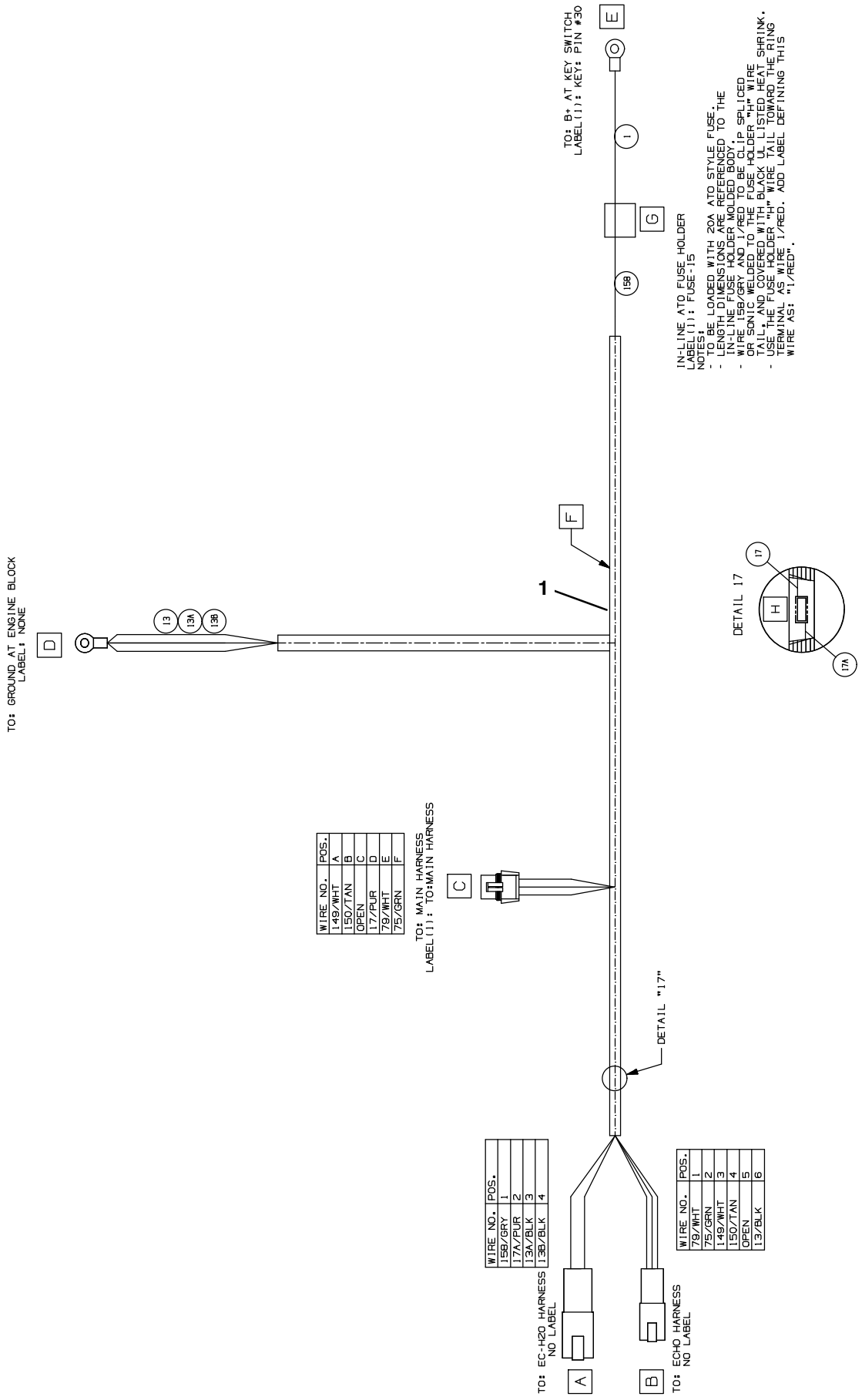

Fig. 20 – ec–H20 Wire Harnesses Group

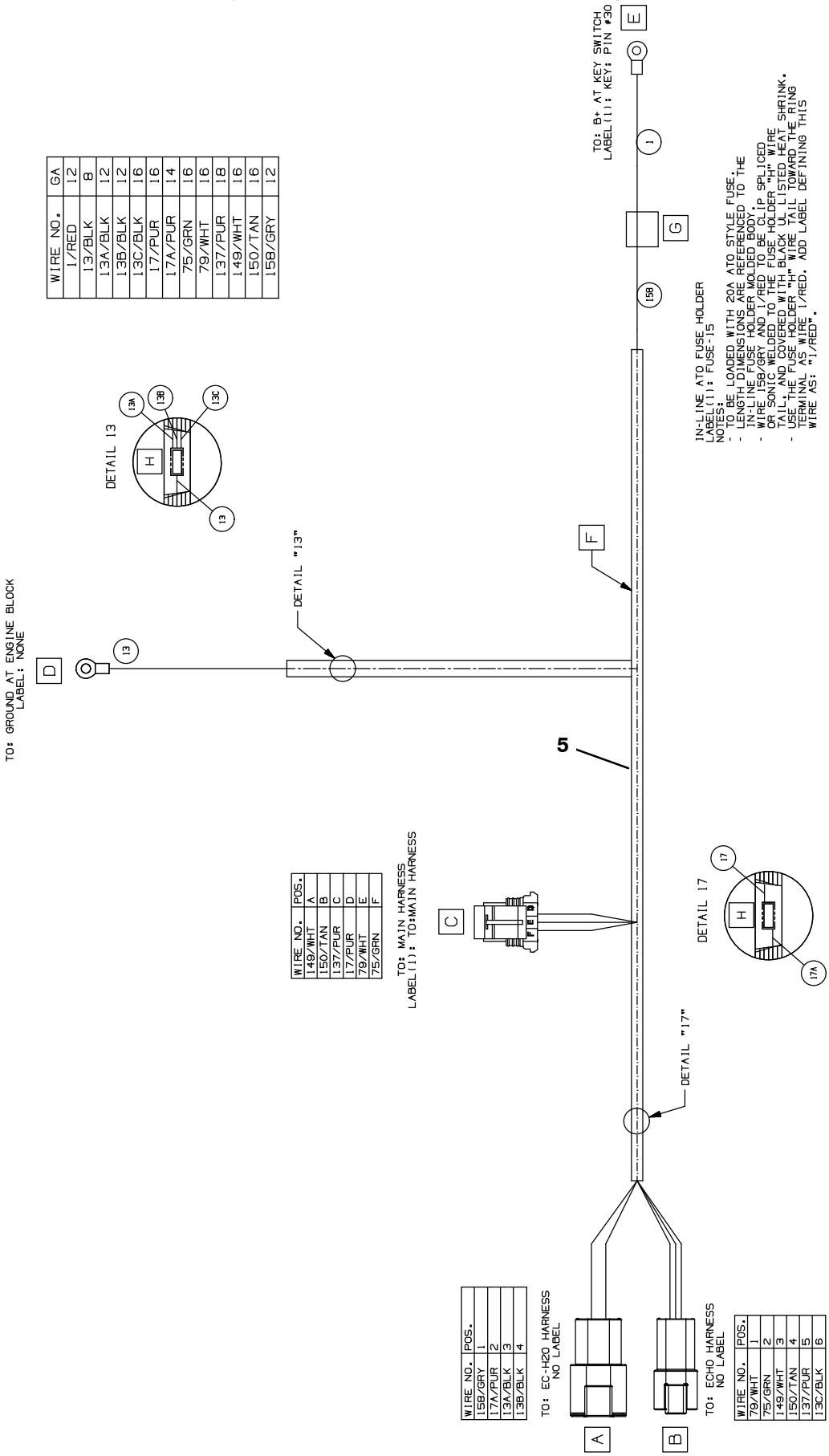

Fig. 20 – ec–H20 Wire Harnesses Group

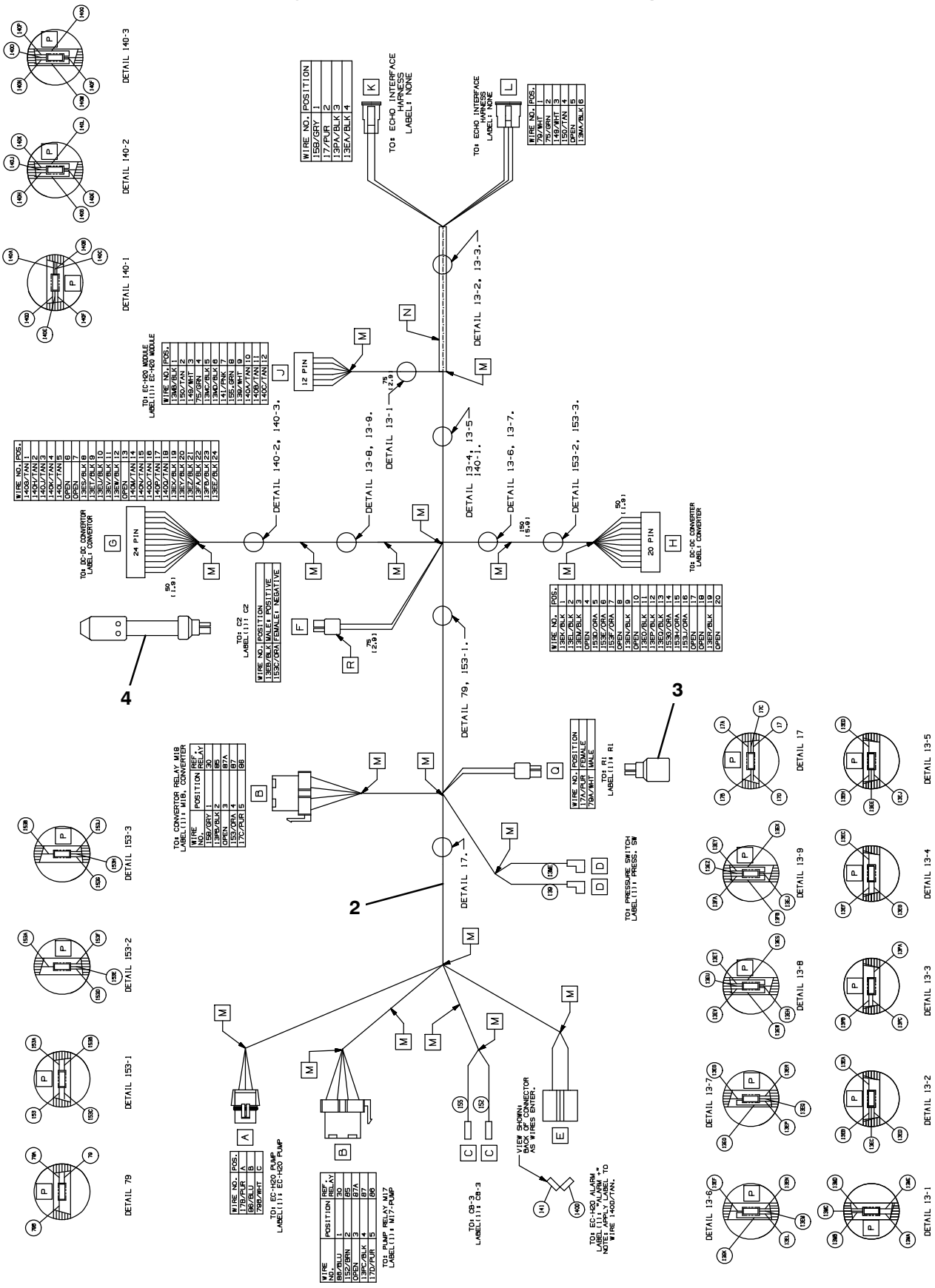

Fig. 20 – ec–H20 Wire Harnesses Group

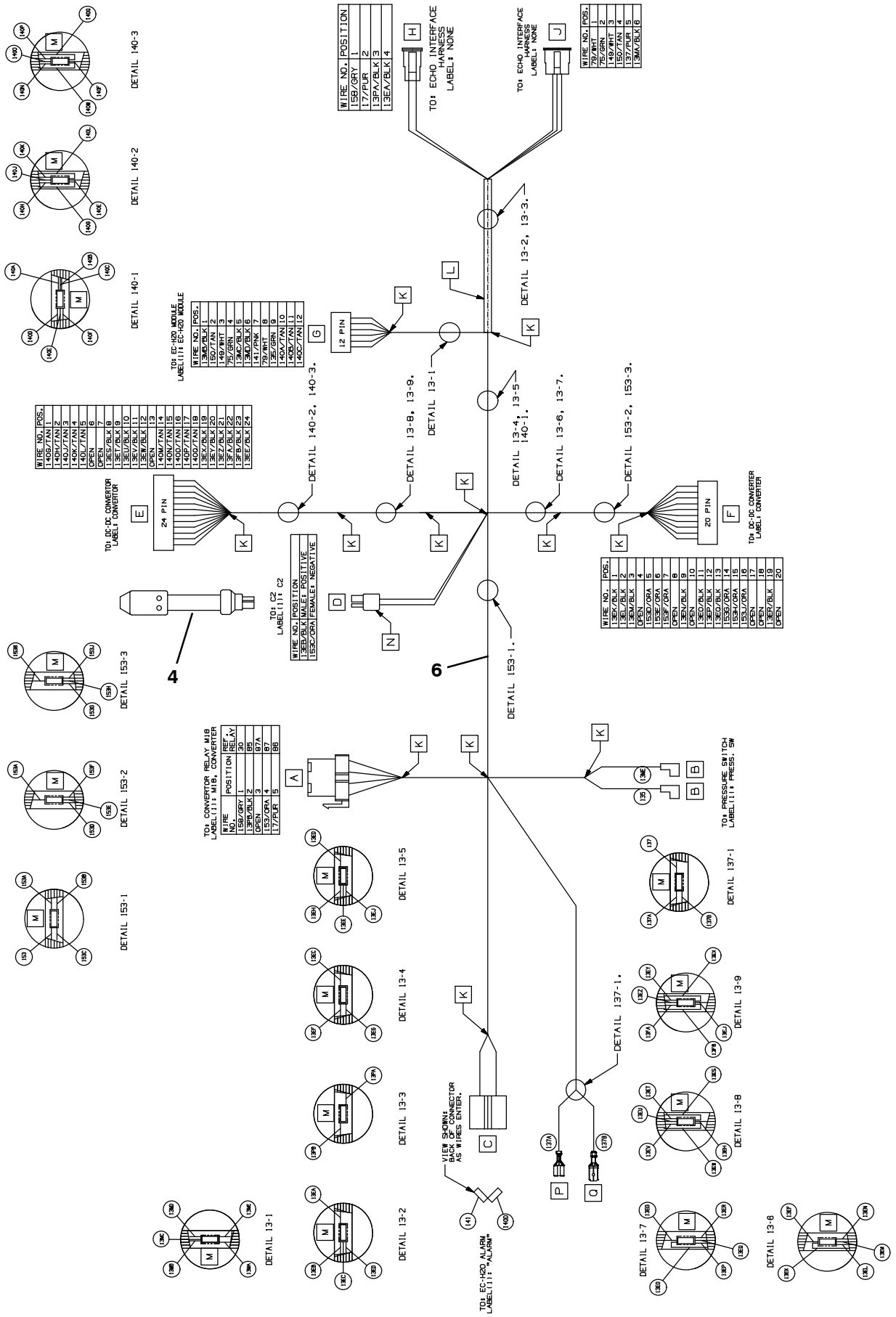

356036

Fig. 20 – ec–H20 Wire Harnesses Group

Ref.	Part No.	Serial Number	Description	Qty.
1	1075140	(008000–014000)	Harness, Ele [Ech2o, Interface]	1
2	1060871	(008000–014000)	Harness, Wire [Ec–H2o]	1
3	1060880	(008000–)	Resistor, Ele, Plug [430 , 2w]	1
4	1060881	(008000–)	Capacitor, Plug [4700uf, 25v]	1
5	1076976	(014001–)	Harness, Ele [Ech2o, Interface]	1
6	1076937	(014001–)	Harness, Wire [Ec–H2o]	1

Fig. 21 – Backup Alarm Kit

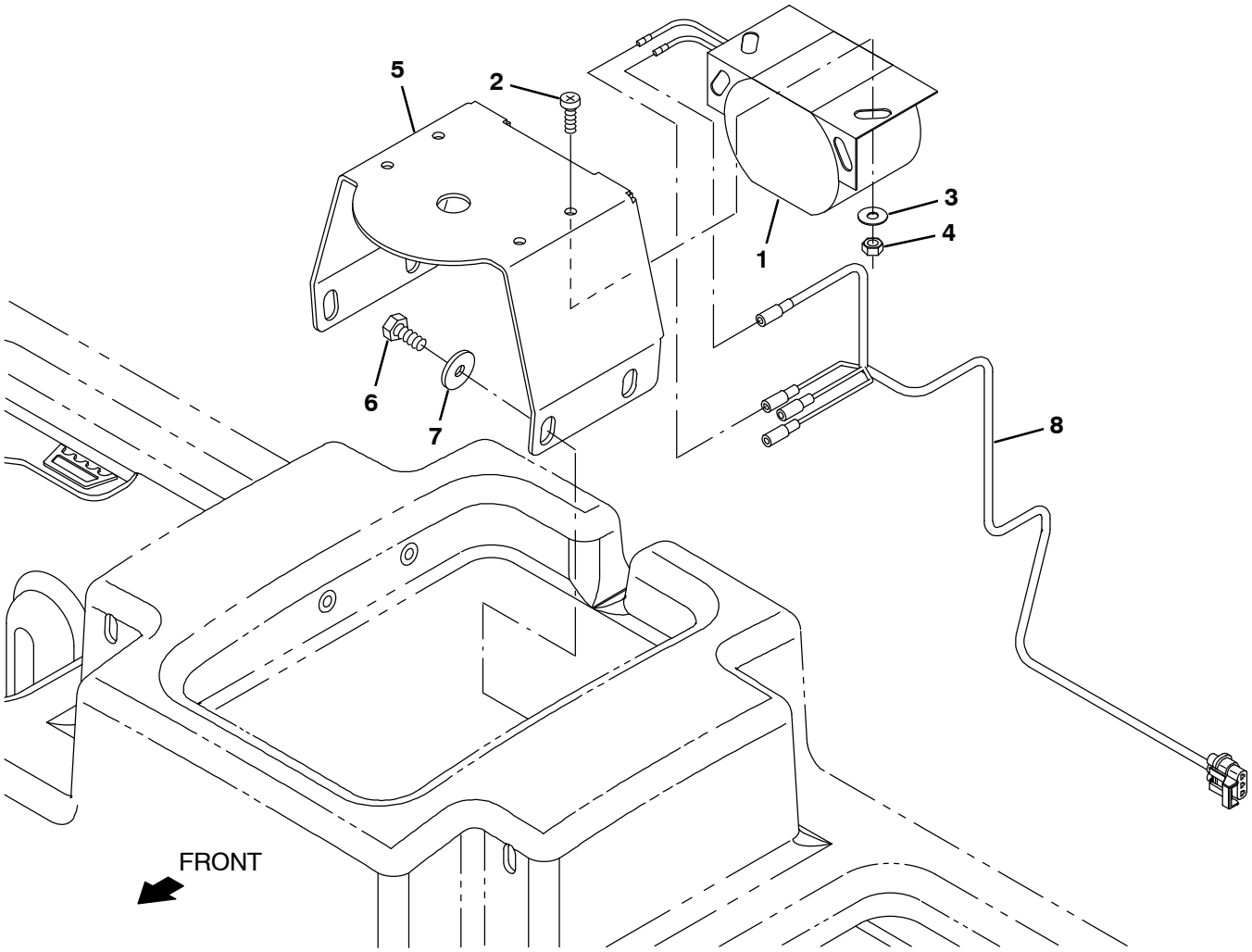

354473

	Ref.	Part No.	Serial Number	Description	Qty.
▽		9001321	(008000–)	Alarm Kit, Backup, Ci [M20 And T20]	1
▲	1	9007131	(008000–)	Alarm Assy, Backup, 12/48Vdc	1
▲	2	24196	(008000–)	Screw, Pan, Phl, M5 X 0.80 X 20, Ss	2
▲	3	19066	(008000–)	Washer, Flat, 10	2
▲	4	09739	(008000–)	Nut, Hex, Lock, M5 X 0.80, Nl, Ss	2
▲	5	1019445	(008000–)	Bracket, Sppt, Strobe Light	1
▲	6	09740	(008000–)	Screw, Hex, M8 X 1.25 X 20, Ss	4
▲	7	1017218	(008000–)	Washer, Flat, 0.32b 1.00d .12, Ss	4
▲	8	1019971	(008000–)	Harness, Warning / Backup [M20 & T20]	1

Fig. 22 – Light Kit, Flashing

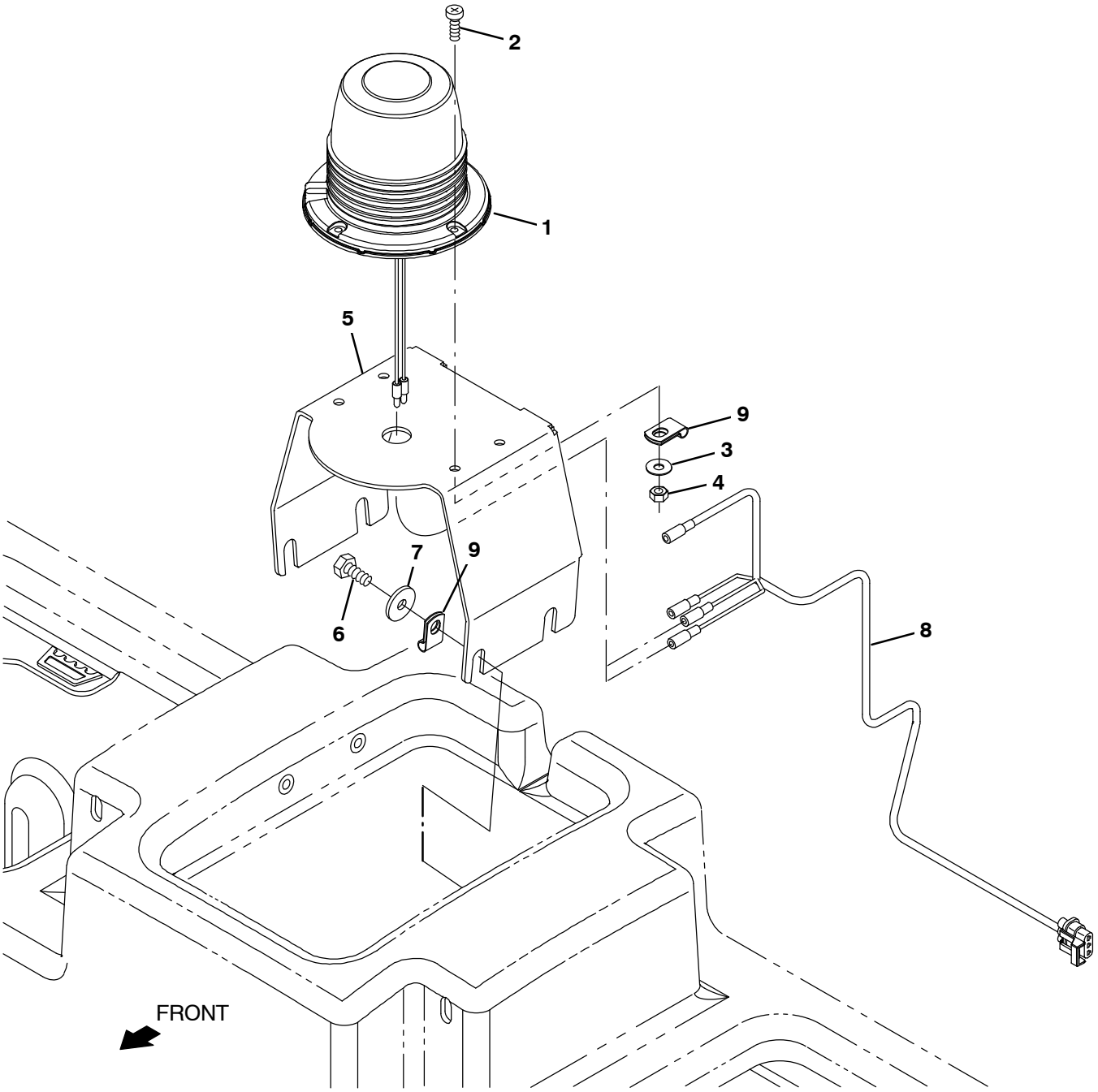

354475

	Ref.	Part No.	Serial Number	Description	Qty.
▽		9001327	(008000–)	Light Kit, Flsh, Ci [M20 And T20]	1
▲	1	1254294	(008000–)	Light, Strobe, Amb, Led	1
▲		383820	(008000–)	Terminal, Bullet, Mal, .156d, 22–18ga	2
▲	2	24196	(008000–)	Screw, Pan, Phl, M5 X 0.80 X 20, Ss	2
▲	3	19066	(008000–)	Washer, Flat, 10	2
▲	4	09739	(008000–)	Nut, Hex, Lock, M5 X 0.80, Nl, Ss	2
▲	5	1019445	(008000–)	Bracket, Sppt, Strobe Light	1
▲	6	09740	(008000–)	Screw, Hex, M8 X 1.25 X 20, Ss	4
▲	7	1017218	(008000–)	Washer, Flat, 0.32b 1.00d .12, Ss	4
▲	8	1019971	(008000–)	Harness, Warning / Backup [M20 & T20]	1
▲	9	46236	(008000–)	Clamp, Cable, Stl, 0.25D X 0.56W, 1Hole	2

Fig. 23 – Light Kit, Strobe

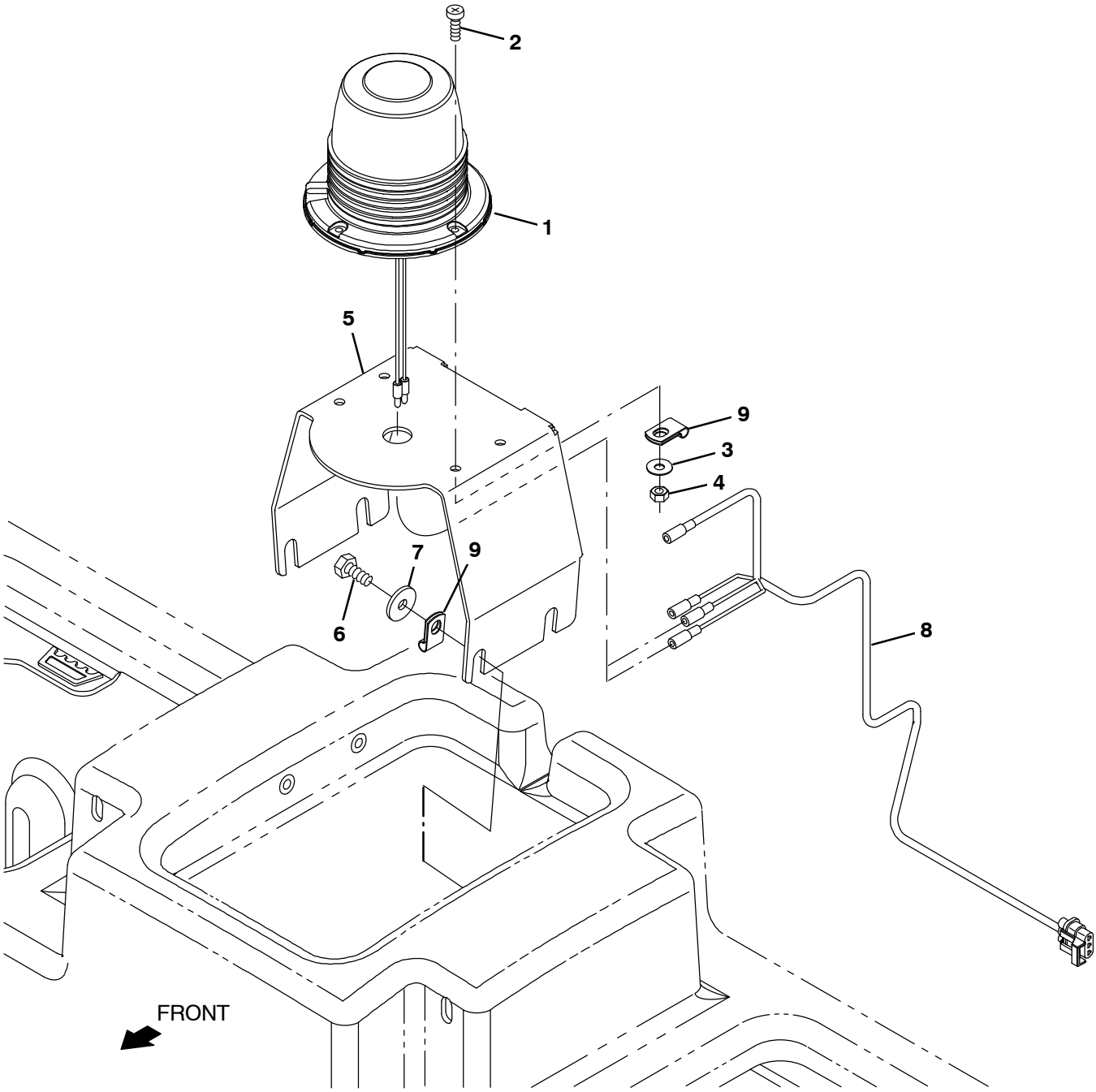

354475

	Ref.	Part No.	Serial Number	Description	Qty.
▽		9001331	(008000–)	Light Kit, Strobe, Ci [M20 And T20]	1
▲	1	1254294	(008000–)	Light, Strobe, Amb, Led	1
▲		383820	(008000–)	Terminal, Bullet, Mal, .156d, 22–18ga	2
▲	2	24196	(008000–)	Screw, Pan, Phl, M5 X 0.80 X 20, Ss	2
▲	3	19066	(008000–)	Washer, Flat, 10	2
▲	4	09739	(008000–)	Nut, Hex, Lock, M5 X 0.80, Nl, Ss	2
▲	5	1019445	(008000–)	Bracket, Sppt, Strobel Light	1
▲	6	09740	(008000–)	Screw, Hex, M8 X 1.25 X 20, Ss	4
▲	7	1017218	(008000–)	Washer, Flat, 0.32b 1.00d .12, Ss	4
▲	8	1019971	(008000–)	Harness, Warning / Backup [M20 & T20]	1
▲	9	46236	(008000–)	Clamp, Cable, Stl, 0.25D X 0.56W, 1Hole	2

Fig. 24 – Light Kit, Flashing Overhead Guard

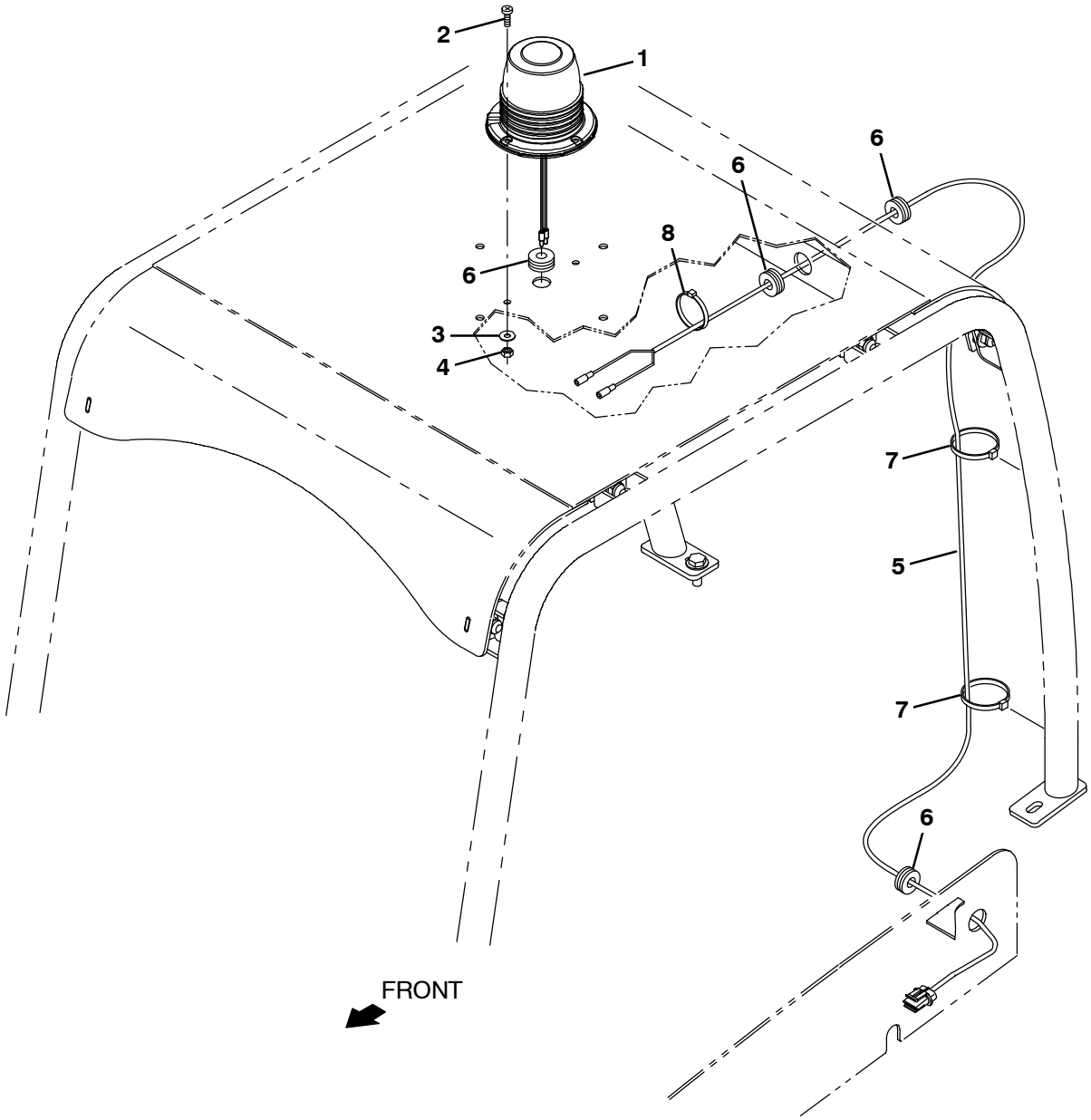

354477

	Ref.	Part No.	Serial Number	Description	Qty.
▽		9001718	(008000–)	Light Kit, Flsh, W/Ohg, Ci[M20 And T20]	1
▲	1	1254294	(008000–)	Light, Strobe, Amb, Led	1
▲		383820	(008000–)	Terminal, Bullet, Mal, .156d, 22–18ga	2
▲	2	24196	(008000–)	Screw, Pan, Phl, M5 X 0.80 X 20, Ss	2
▲	3	19066	(008000–)	Washer, Flat, 10	2
▲	4	09739	(008000–)	Nut, Hex, Lock, M5 X 0.80, Nl, Ss	2
▲	5	1019647	(008000–)	Harness, Warning / Ohg [M20]	1
▲	6	10632–17	(008000–)	Grommet, Rbr, 0.50id, F/0.8h, .12 Matl	4
▲	7	763115	(008000–)	Tie, Cable, 6.0l, 1.25d Max	4
▲	8	49266	(008000–)	Tie, Cable, Nyl, 07.3l .19w 1.8 Max D	2

Fig. 25 – Light Kit, Strobe Overhead Guard

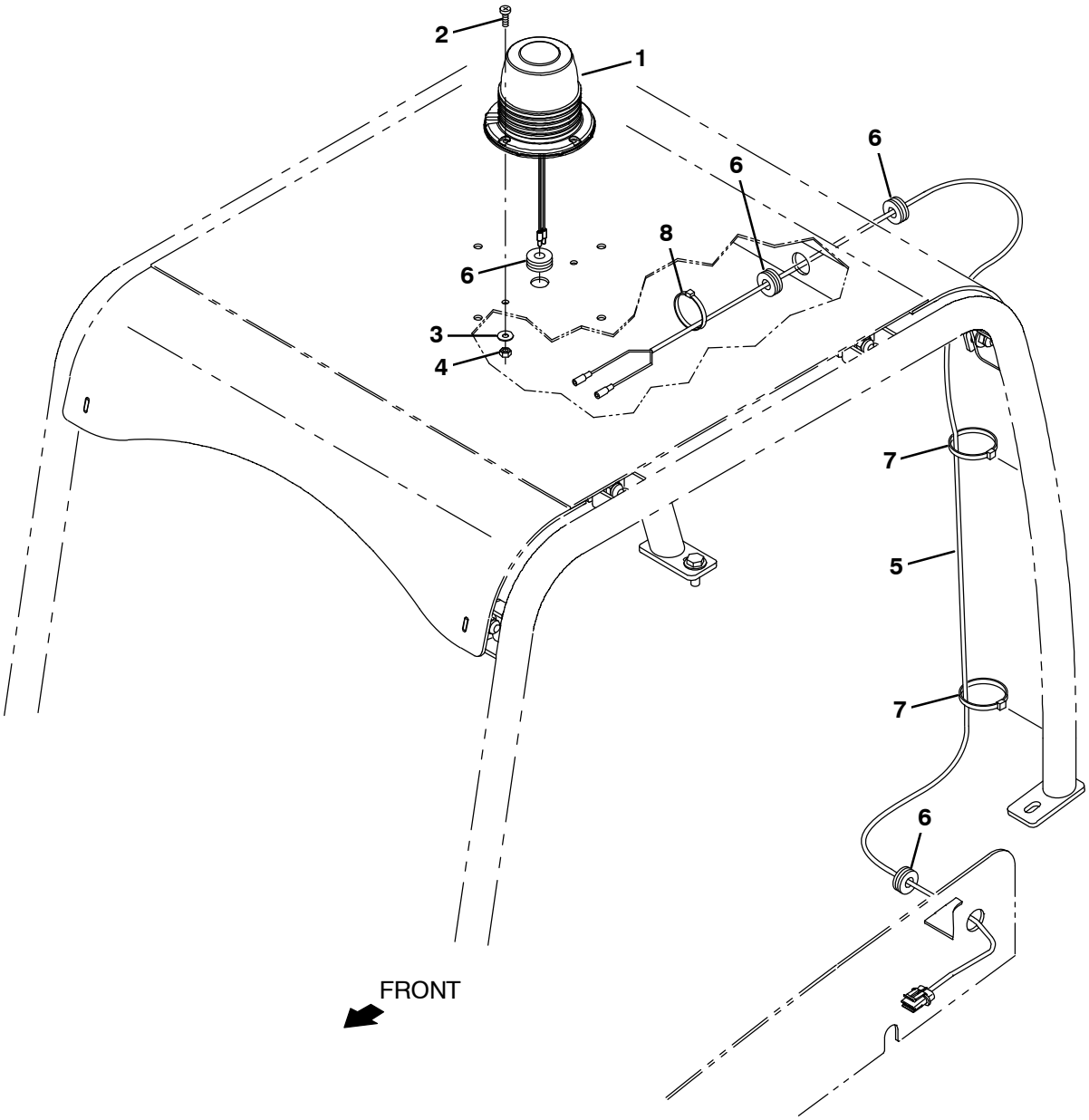

354477

	Ref.	Part No.	Serial Number	Description	Qty.
▽		9001717	(008000–)	Light Kit, Strobe, W/Ohg, Ci [M20 And T20]	1
▲	1	1254294	(008000–)	Light, Strobe, Amb, Led	1
▲		383820	(008000–)	Terminal, Bullet, Mal, .156d, 22–18ga	2
▲	2	24196	(008000–)	Screw, Pan, Phl, M5 X 0.80 X 20, Ss	2
▲	3	19066	(008000–)	Washer, Flat, 10	2
▲	4	09739	(008000–)	Nut, Hex, Lock, M5 X 0.80, Nl, Ss	2
▲	5	1019647	(008000–)	Harness, Warning / Ohg [M20]	1
▲	6	10632–17	(008000–)	Grommet, Rbr, 0.50id, F/0.8h, .12 Matl	4
▲	7	763115	(008000–)	Tie, Cable, 6.0l, 1.25d Max	4
▲	8	49266	(008000–)	Tie, Cable, Nyl, 07.3l .19w 1.8 Max D	2

Fig. 26 – Overhead Guard Kit

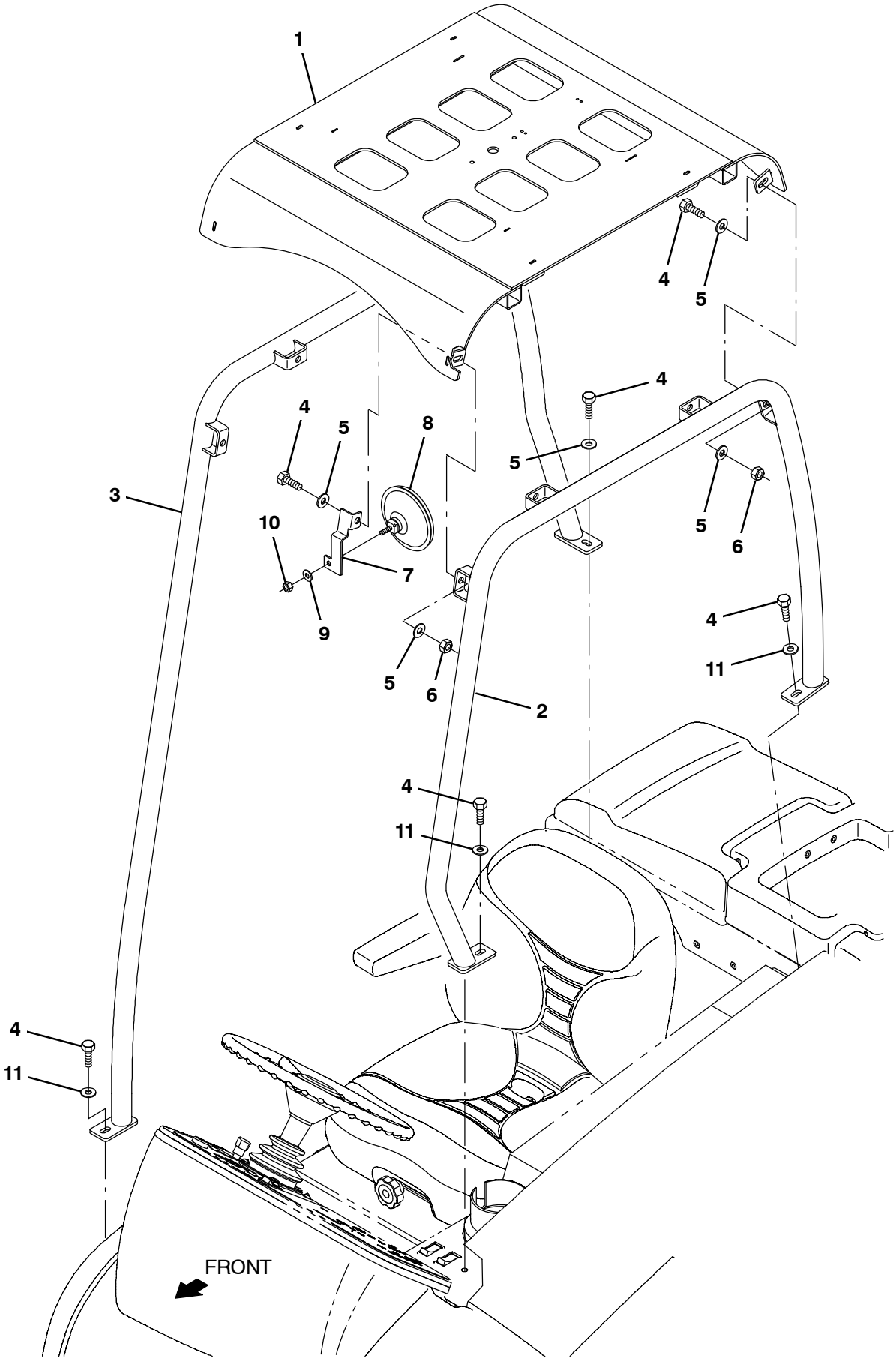

354478

Fig. 26 – Overhead Guard Kit

	Ref.	Part No.	Serial Number	Description	Qty.
▽		9001314	(008000–)	Ohg Kit, Ci [M20 And T20]	1
▲	1	1022276	(008000–)	Guard Wldt, Top, Ohg	1
▲	2	1069241	(008000–)	Tube Wldt, Leg, Ohg, Lh, Pntd	1
▲	3	1069253	(008000–)	Tube Wldt, Leg, Ohg, Rh, Pntd	1
▲	4	03192	(008000–)	Screw, Hex, M10 X 1.5 X 30, 8.8	12
▲	5	32492	(008000–)	Washer, Flat, 0.38 Std	17
▲	6	41430	(008000–)	Nut, Hex, Lock, M10 X 1.5, Nl	8
▲	7	1023879	(008000–)	Bracket, Mtg, Mirror, Rearview	1
▲	8	1050295	(008000–)	Mirror, Convex, 0.50D	1
▲	9	32491	(008000–)	Washer, Flat, 0.31, Std	1
▲	10	19313	(008000–)	Nut, Hex, Std, .31–18	1
▲	11	1014563	(008000–)	Washer, Flat, 0.40b 1.12d .12, Ss	3

Fig. 27 – Telemetry Group

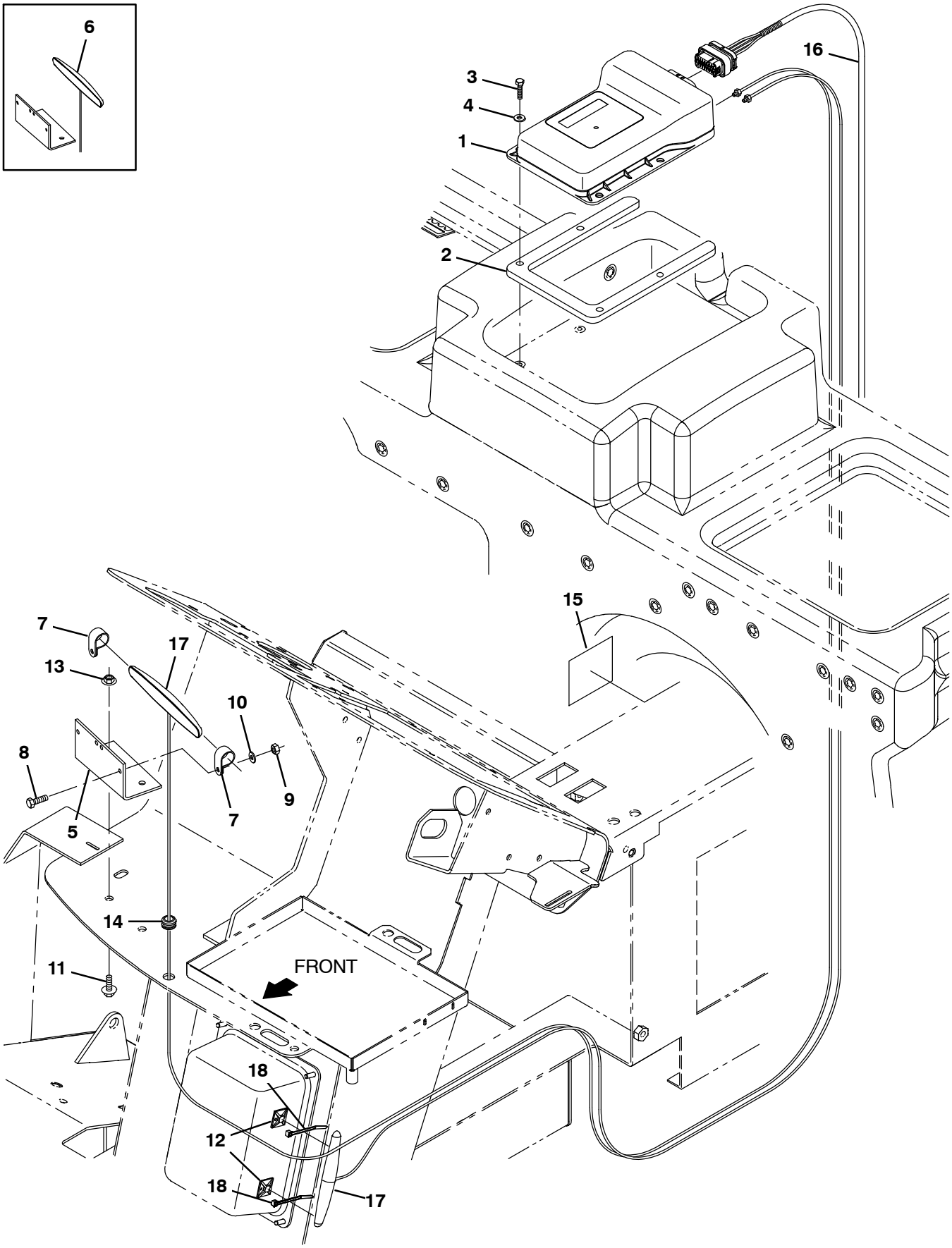

356266 – NA

Fig. 27 – Telemetry Group

Ref.	Part No.	Serial Number	Description	Qty.
1	9010085	(008000–)	Control Box Assy Kit, Replmt, Telem [USA]	1
1	9010086	(008000–)	Control Box Assy Kit, Replmt, Telem [CAN]	1
2	1071062	(008000–)	Bracket, Spacer, Controlbox	1
3	09252	(008000–)	Screw,Hex, M5 X 0.80 X 29, 8.8	4
4	01683	(008000–)	Washer, Flat, 10, Ss	4
5	1070402	(008000–)	Angle, mtg, Antenna, Telem	1
6	1070659	(008000–011777)	Antenna, Telem, 70 In [Gprs]	1
7	140916	(008000–)	Clamp, Cable, Nyl, 0.62D, Nat	2
8	09244	(008000–)	Screw, Hex, M5 X 0.80 X 16, 8.8	2
9	06549	(008000–)	Nut, Hex, Lock, M5 X 0.80, Nl	2
10	19066	(008000–)	Washer, Flat, 0.25b 0.56d .05, Pl, 10	2
11	1040467	(008000–)	Screw, Hex, H6 X 1.00 X 20, 9.8, Sems	2
12	55248	(011778–)	Mount, Cable Tie	2
13	07790	(008000–)	Nut, Hex, Flng, M6 X 1.00	2
14	10632–12	(008000–)	Grommet, Rbr, 0.38id, F/0.5H, .12 Matl	1
15	1069580	(008000–)	Label, Opertnl, Telem [Fcc/Ic]	1
16	1075143	(008000–)	Harness, Ele [Telem]	1
17	1248350	(011778–)	Antenna, Telem [4g, 180”]	2
18	763114	(011778–)	Tie, Cable, 11.3l, 2.75d Max	2

Fig. 28 – Vacuum Wand Kit

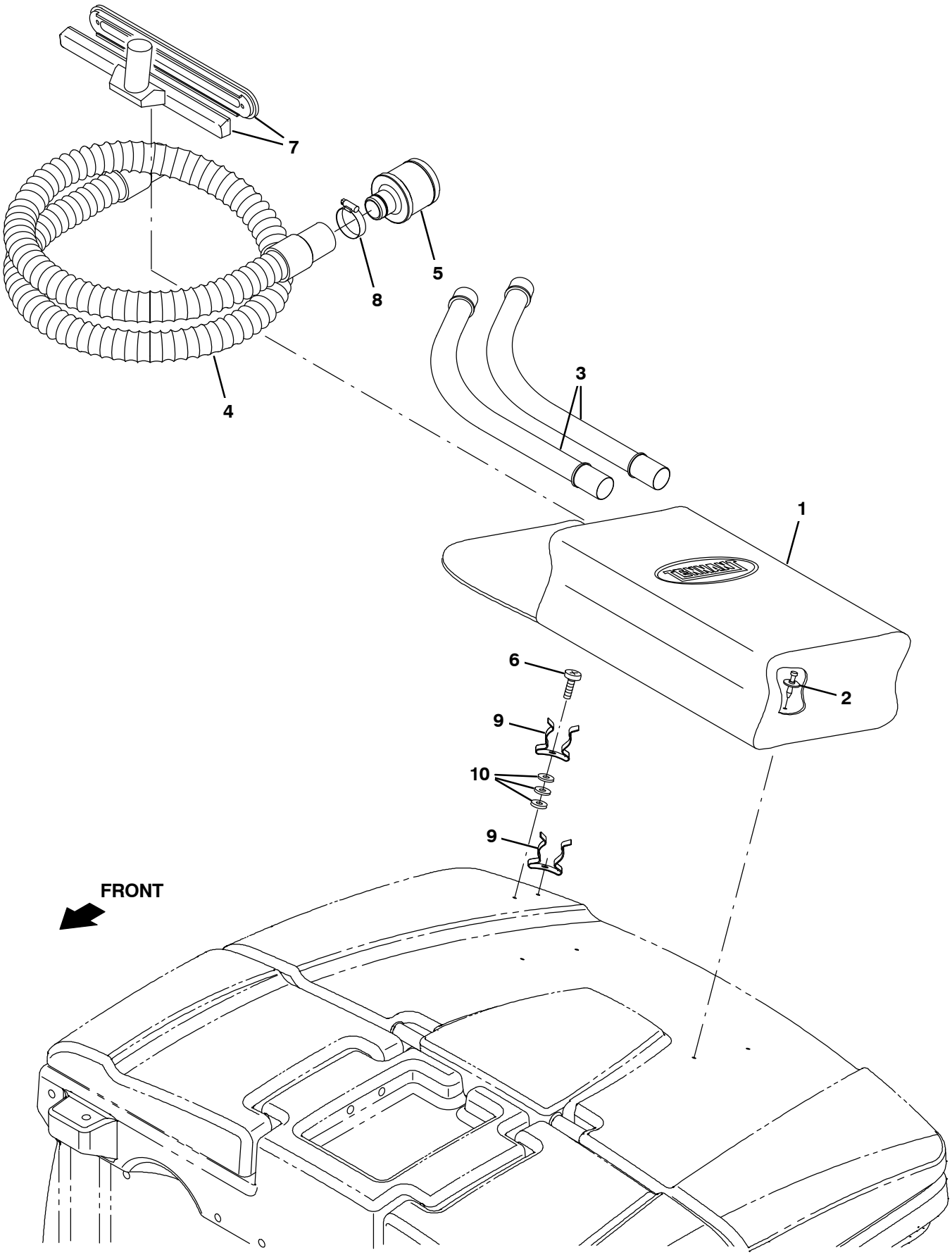

354659 – M20

Fig. 28 – Vacuum Wand Kit

	Ref.	Part No.	Serial Number	Description	Qty.
▽		9001334	(008000–)	Wand Kit, Vacuum, Ci [M20]	1
▲	1	65580	(008000–)	Bag, Power	1
▲	2	72968	(008000–)	Rivet, Plstc, .250d X 0.90	4
▲	3	190722	(008000–)	Wand, Chm, Dbl Bend [1 Pk= 1 Box Of 2pc]	1
▲	4	86767	(008000–)	Hose Assy, W/2cuff, 1.5d 090l 1.5/1.5	1
▲	5	1029396	(008000–)	Fitting, Alm, Str, Bm24/Bm48	1
▲	6	55845	(008000–)	Screw, Hex, M5 X 0.80 X 16, Fmg	2
▲	7	13840	(008000–)	Nozzle Assy, Tool, Wand, 14.0 Inch	1
▲	8	79381	(008000–)	Clamp, Hose, Wormdrive, 1.25–2.00d, .50w	1
▲	9	67004	(008000–)	Clip, Grip, Finger, 1.00–1.88d White,Vyl	2
▲	10	19064	(008000–)	Washer, Flat, 06	6

Fig. 29 – Spray Nozzle Kit (008000–014000)

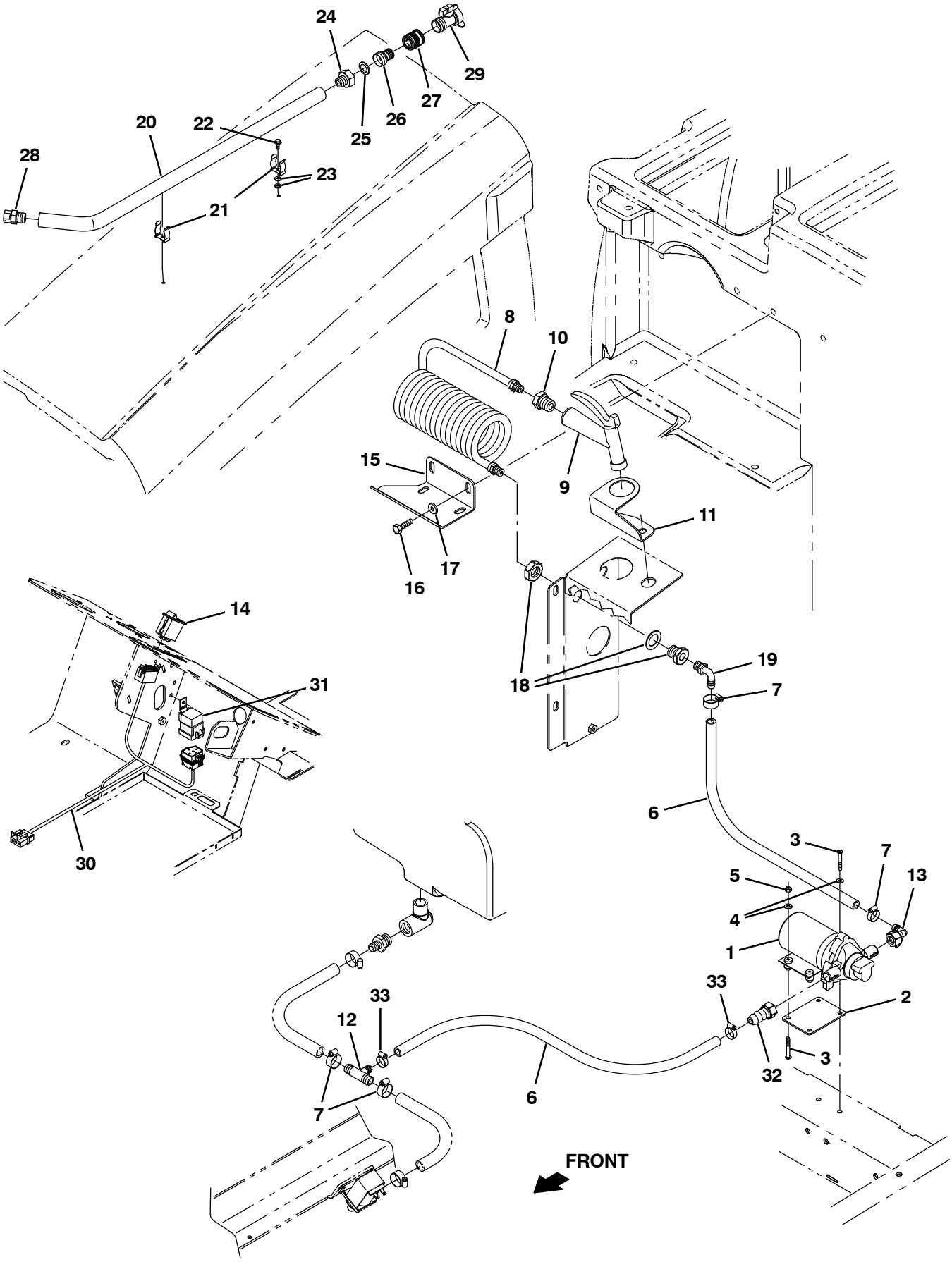

354480

Fig. 29 – Spray Nozzle Kit (008000–014000)

	Ref.	Part No.	Serial Number	Description	Qty.
▽		9001310	(008000–014000)	Nozzle Kit, Spray, Ci	1
▲	1	1026743	(008000–014000)	Pump, Diaphragm (See Breakdowns)	1
▲	2	1027007	(008000–014000)	Plate, Mtg, Pump	1
▲	3	06939	(008000–014000)	Screw, Pan, M5 X 0.80 X 45, 4.8	4
▲	4	19066	(008000–014000)	Washer, Flat, #10	4
▲	5	06549	(008000–014000)	Nut, Hex, Lock, M5 X 0.80, Nl	2
▲	6	1015045	(008000–014000)	Hose, Afmkt, Pvc, Brd, 0.75id, 08ft, Clr	1
▲	7	63810	(008000–014000)	Clamp, Hose, Wormdrive, 0.56–1.06d, .56w	4
▲	8	1019250	(008000–014000)	Hose, Water, Coil	1
▲	9	769785	(008000–014000)	Nozzle, Spray, Gun	1
▲	10	1027976	(008000–014000)	Fitting, Brs, Str, Pf06/Pm12	1
▲	11	1027237	(008000–014000)	Bracket, Mtg, Spray Handle	1
▲	12	1015486	(007260–012xxx)	Fitting, Plstc, Tee, Bm08/Bm10/Bm10, Br	1
▲	13	1018499	(008000–014000)	Fitting, Plstc, E90, Bm08/Pf08s, Swivel	1
▲	14	398500	(008000–014000)	Switch, Rocker, Dpdt On/None/On	1
▲	15	1029790	(008000–014000)	Bracket, Mtg, Spray Wand [FaST, Conv]	1
▲	16	09740	(008000–014000)	Screw, Hex, M8 X 1.25 X 20, Ss	2
▲	17	1017218	(008000–014000)	Washer, Flat, 0.32b 1.00d .12, Ss	2
▲	18	1027978	(008000–014000)	Fitting, Brs, Str, Pf06/Pf06 Bh	1
▲	19	64778	(008000–014000)	Fitting, Plstc, E90, Bm08/Pm06	1
▲	20	1029055	(008000–014000)	Wand, Clean–Out	1
▲	21	1029057	(008000–014000)	Clip, Grip, Finger, .875–1.25	2
▲	22	20394	(008000–014000)	Screw, Hex, #10–16 X 0.62, Fmg [Ab]	2
▲	23	01683	(008000–014000)	Washer, Flat, #10, Ss	4
▲	24	375321	(008000–014000)	Fitting, Brs, Str, Pm08/Garden Hose	1
▲	25	01316	(008000–014000)	Washer, Flat, 0.66b 1.00d .12, Rbr	1
▲	26	1029153	(008000–014000)	Nipple, Hose	1
▲	27	1029155	(008000–014000)	Coupling, Nozzle, Spray	1
▲	28	1029156	(008000–014000)	Nozzle	1
▲	29	1029399	(008000–014000)	Valve, Shutoff	1
▲	30	1021881	(008000–014000)	Harness, Spray, Nozzle	1
▲	31	56186	(008000–014000)	Relay, 12vdc, 40a, Spdt N/O	1
▲	32	1018495	(008000–014000)	Fitting, Plstc, Str, Bm08/Pf08s, Swivel	1
▲	33	54333	(008000–014000)	Clamp, Hose, Wormdrive, 0.31–0.88d, .31w	2

Fig. 30 – Spray Nozzle Group (014001–)

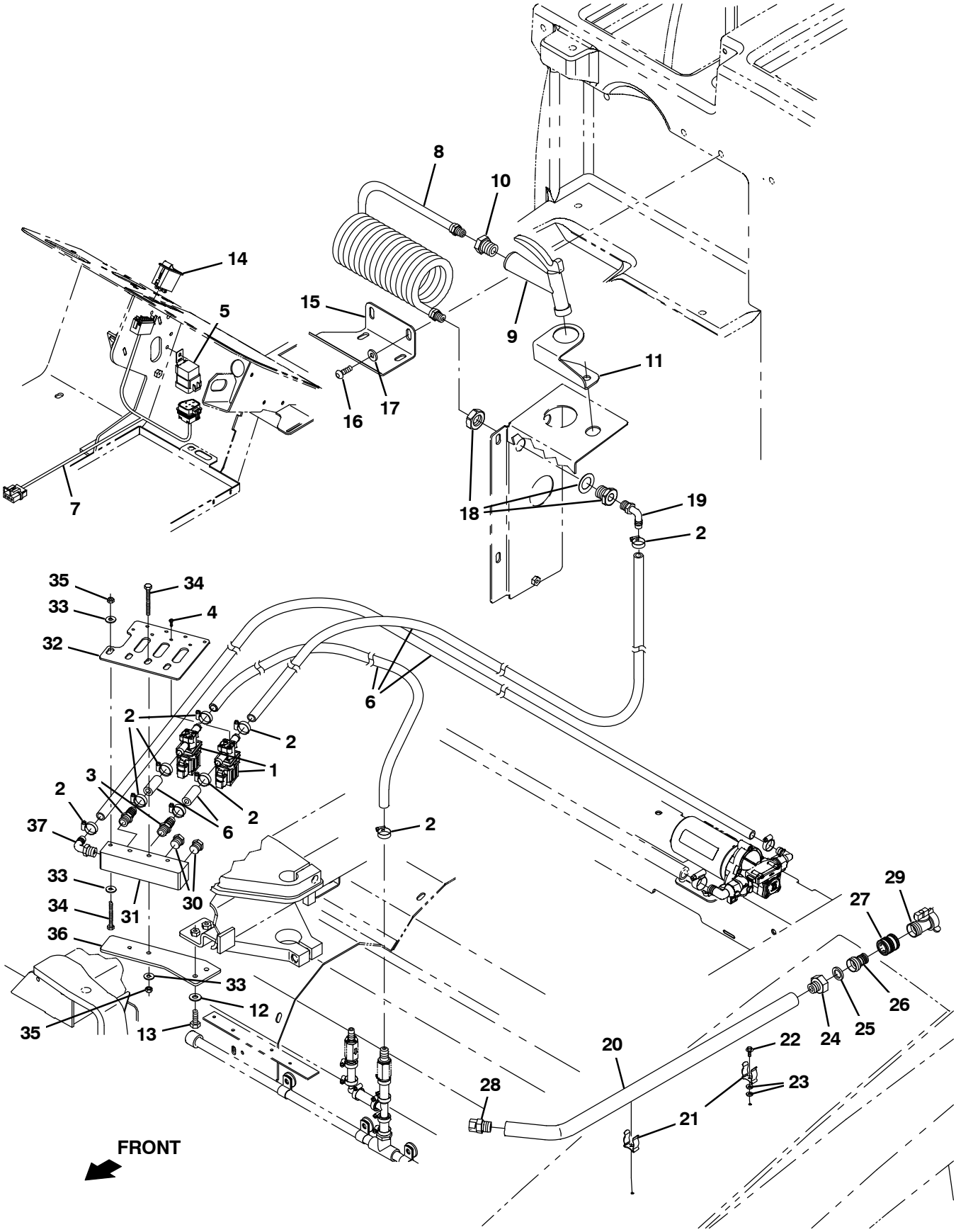

357106 - M20

Fig. 30 - Spray Nozzle Group (014001-)

Ref.	Part No.	Serial Number	Description	Qty.
1	1076870	(014001-)	Valve, Water, Solenoid [12vdc, Bm08/Bm08	1
2	54333	(014001-)	Clamp, Hose, Wormdrive, 0.31- 0.88d, .31w	8
3	64743	(014001-)	Fitting, Plstc, Str, Bm08/Pm06	2
4	1257563	(014001-)	Screw, Pan, Torx, 06- 19 X 0.38, F/ Plstc	4
5	56186	(014001-)	Relay, 12vdc, 40a, Spdt N/O	1
6	1011412	(014001-)	Hose, Afmkt, Pvc, Brd, 0.50id, 08ft, Clr	1
7	1076974	(014001-)	Harness, Spray, Nozzle	1
8	1019250	(014001-)	Hose, Water, Coil	1
9	769785	(014001-)	Nozzle, Spray, Gun	1
10	1027976	(014001-)	Fitting, Brs, Str, Pf06/Pm12	1
11	1027237	(014001-)	Bracket, Mtg, Spray Handle	1
12	01685	(014001-)	Washer, Flat, 0.38b 0.88d .08, Ss	2
13	09010	(014001-)	Screw, Hex, M8 X 1.25 X 25, Ss	2
14	398500	(014001-)	Switch, Rocker, Dpdt On/None/On	1
15	1029790	(014001-)	Bracket, Mtg, Spray Wand [FaST, Conv]	1
16	393135	(014001-)	Screw, Btn, M8 X 1.25 X 20, Blk	2
17	32491	(014001-)	Washer, Flat, 0.31, Std	2
18	1027978	(014001-)	Fitting, Brs, Str, Pf06/Pf06 Bh	1
19	64778	(014001-)	Fitting, Plstc, E90, Bm08/Pm06	1
20	1029055	(014001-)	Wand, Clean- Out	1
21	1029057	(014001-)	Clip, Grip, Finger, .875- 1.25	2
22	20394	(014001-)	Screw, Hex, #10- 16 X 0.62, Fmg [Ab]	2
23	01683	(014001-)	Washer, Flat, #10, Ss	4
24	375321	(014001-)	Fitting, Brs, Str, Pm08/Garden Hose	1
25	01316	(014001-)	Washer, Flat, 0.66b 1.00d .12, Rbr	1
26	1029153	(014001-)	Nipple, Hose	1
27	1029155	(014001-)	Coupling, Nozzle, Spray	1
28	1029156	(014001-)	Nozzle	1
29	1029399	(014001-)	Valve, Shutoff	1
30	630146	(014001-)	Fitting, Plug, Pm06, Hdpe	2
31	1254833	(014001-)	Manifold, Soln	1
32	1254856	(014001-)	Plate, Manifold, Mtg	1
33	32490	(014001-)	Washer, Flat, 0.25, Std	6
34	1257800	(014001-)	Screw, Hex, M6 X 1.00 X 60, Ss, Fl	4
35	08712	(014001-)	Nut, Hex, Lock, M6 X 1.00, Nl, Ss	4
36	1077124	(014001-)	Bracket, Manifold, Stratus	1
37	64778	(014001-)	Fitting, Plstc, E90, Bm08/Pm06	1

Fig. 31 – Transport Kit

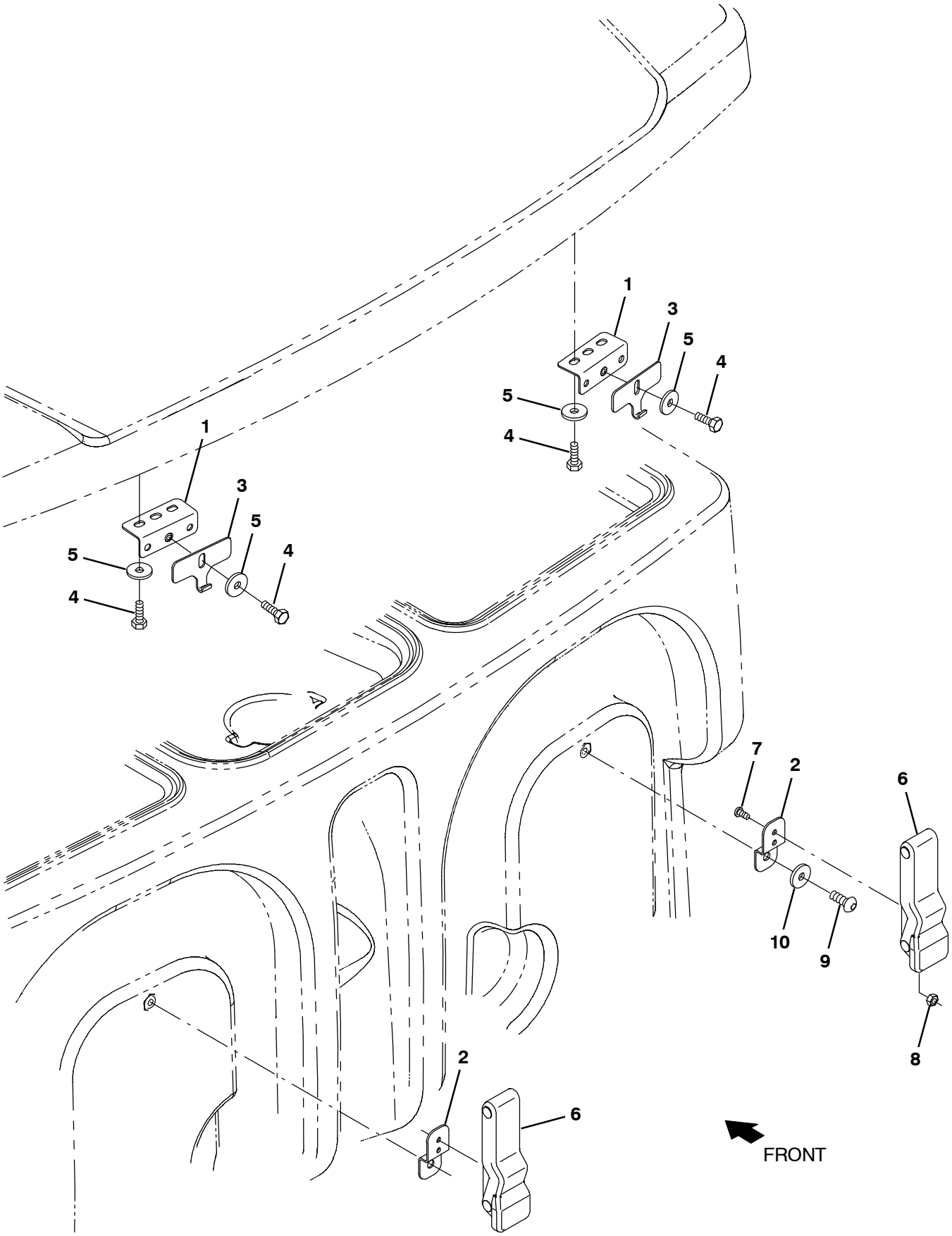

354481 – M20, M30

Fig. 31 – Transport Kit

	Ref.	Part No.	Serial Number	Description	Qty.
▽		9014867	(008000–)	Transport Kit, Ci [M20/M30}	1
▲	1	1040800	(008000–)	Bracket, Latch, Cover	2
▲	2	1020526	(008000–)	Bracket, Retaining, Hose	2
▲	3	1040634	(008000–)	Plate, Hook, Latch	2
▲	4	09744	(008000–)	Screw, Hex, M6 X 1.00 X 12, Ss	6
▲	5	01684	(008000–)	Washer, Flat, 0.27b 0.69d .05, Ss	6
▲	6	1222019	(008000–)	Latch, Yellow	2
▲	7	09200	(008000–)	Screw, Pan, Phl, M5 X 0.80 X 12, Ss	4
▲	8	09739	(008000–)	Nut, Hex, Lock, M5 X 0.80, Nl, Ss	4
▲	9	393135	(008000–)	Screw, Btn, M8 X 1.25 X 20, Blk	2
▲	10	32491	(008000–)	Washer, Flat, 0.31, Std	2

Fig. 32 – Squeegee Guard Kit

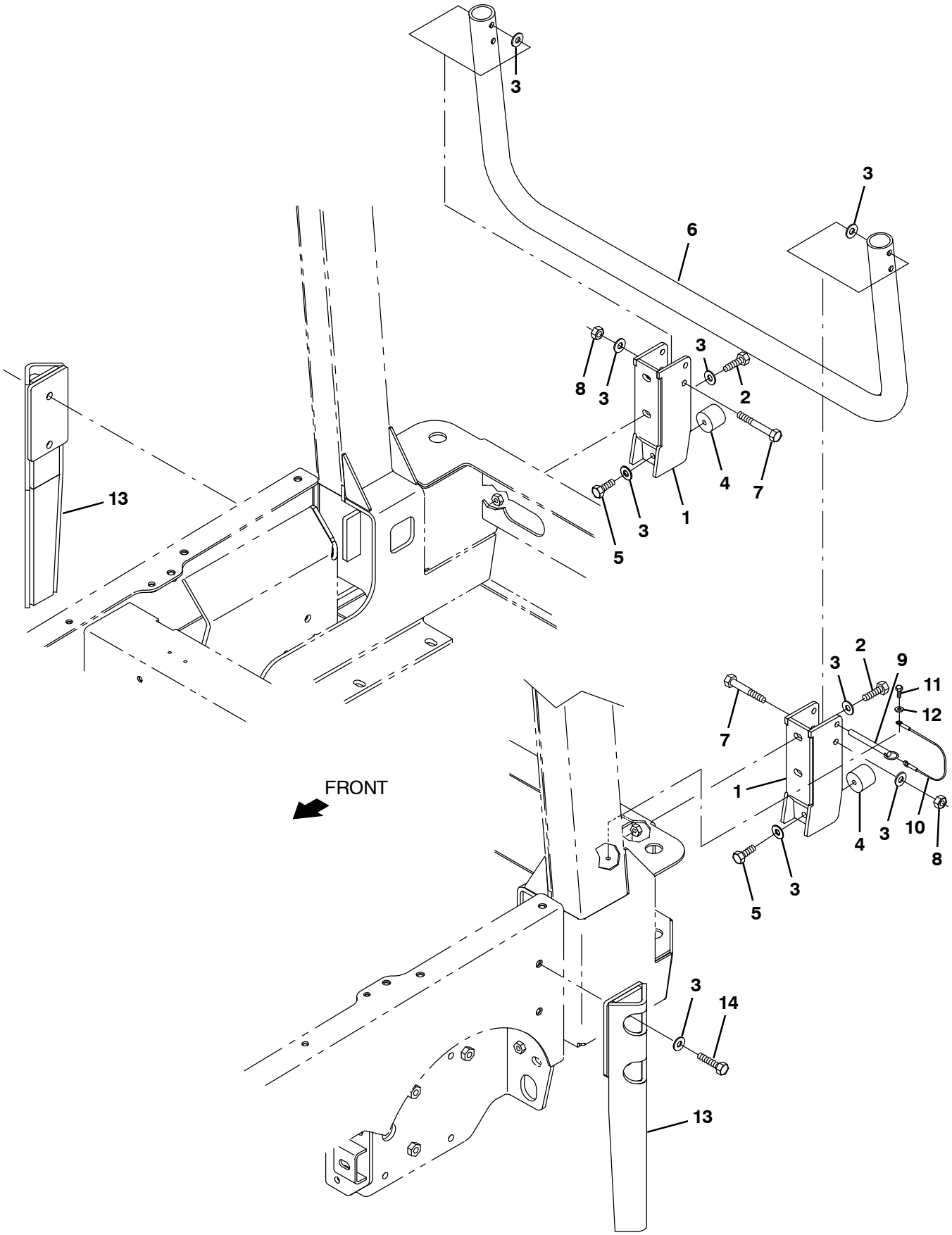

354482 – NA

Fig. 32 – Squeegee Guard Kit

	Ref.	Part No.	Serial Number	Description	Qty.
▽		9001338	(008000–)	Guard Kit, Sqge, Ci [M20]	1
▲	1	1027560	(008000–)	Bracket Wldt, Guard, Sqge	2
▲	2	39284	(008000–)	Screw, Hex, M10 X 1.5 X 35, 8.8	4
▲	3	32492	(008000–)	Washer, Flat, 0.38 Std	14
▲	4	1024977	(008000–)	Bumper, Ure, 1.50d 1.25l	2
▲	5	21196	(008000–)	Screw, Hex, .38–16 X 0.88, 5	2
▲	6	1054338	(008000–)	Guard Wldt, Sqge	1
▲	7	06965	(008000–)	Screw, Hex, M10 X 1.5 X 80, 8.8	2
▲	8	41430	(008000–)	Nut, Hex, Lock, M10 X 1.5, Nl	2
▲	9	369359	(008000–)	Pin, Hitch, .375d X 3.12l, Pl	1
▲	10	57702	(008000–)	Cable, Glv .06d 012.0l .26eye /.26eye	1
▲	11	09738	(008000–)	Screw, Hex, M5 X 0.8 X 12, Ss	1
▲	12	01683	(008000–)	Washer, Flat, #10, Ss	1
▲	13	1045444	(008000–)	Guard Wldt, Sqge [M20/T20/M30]	2
▲	14	06962	(008000–)	Screw, Hex, M10 X 1.5 X 45, 8.8	4

Fig. 33 - Pressure Washer Mount Group

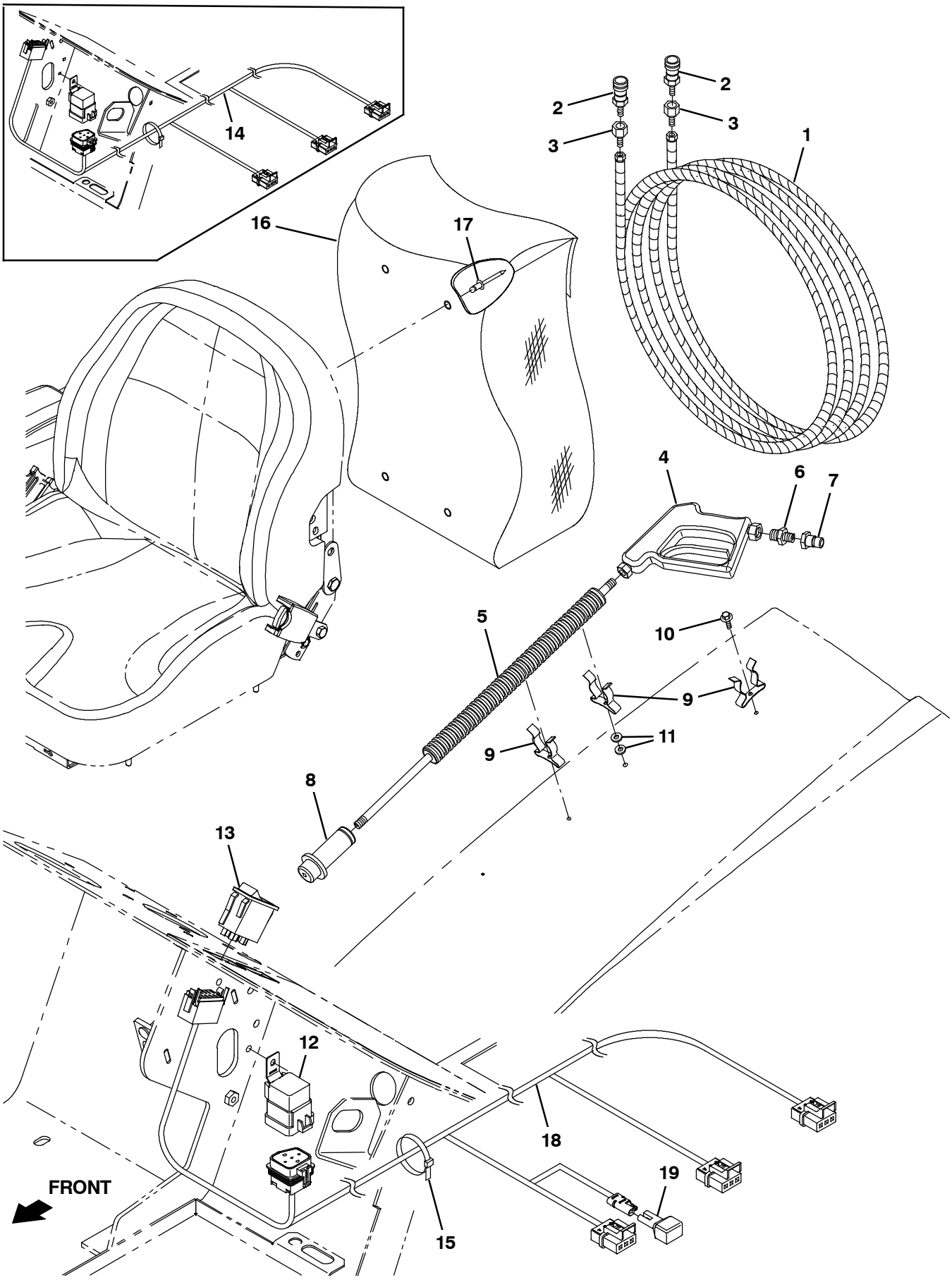

354672

Fig. 33 – Pressure Washer Mount Group

Ref.	Part No.	Serial Number	Description	Qty.
1	1039056	(008000–)	Hose, Rbr, 25ft	1
2	1042051	(008000–)	Fitting, Ss, Qdc, Fem	2
3	1259146	(008000–)	Fitting, Swivel, Str, Pf06/Pm04, Stl	2
4	1039042	(008000–)	Handle, Gun, Trigger	1
5	1039044	(008000–)	Wand, Str, Ss, 28l	1
6	1044428	(008000–)	Fitting, Brs, Str, Pm04/Pm06 [Hp]	1
7	1042191	(008000–)	Fitting, Ss, Qdc, Mal	1
8	1041935	(008000–)	Nozzle, Spray [Pressure Washer]	1
9	67004	(008000–)	Clip, Grip, Finger, 1.00–1.88d White,Vyl	3
10	20394	(008000–)	Screw, Hex, 10–16 X 0.62, Fmg/Ab, Pl	3
11	01683	(008000–)	Washer, Flat, 10, Ss	6
12	56186	(008000–)	Relay, 12vdc, 040a, Spdt No	1
13	1040899	(008000–)	Switch, Rocker, Prgrsv	1
14	1074983	(008000–014000)	Harness, Ele [Press. Wash]	1
15	49266	(008000–)	Tie, Cable, Nyl, 07.3l .19w 1.8 Max D	5
16	65580	(008000–)	Bag, Power	1
17	72968	(008000–)	Rivet, Plstc, .250D X 0.90	2
18	1076975	(014001–)	Harness, Ele [Press. Wash]	1
19	222290	(014001–)	Diode, Ele, Plug	1

Fig. 34 – Pressure Washer Solution Group (008000–014000)

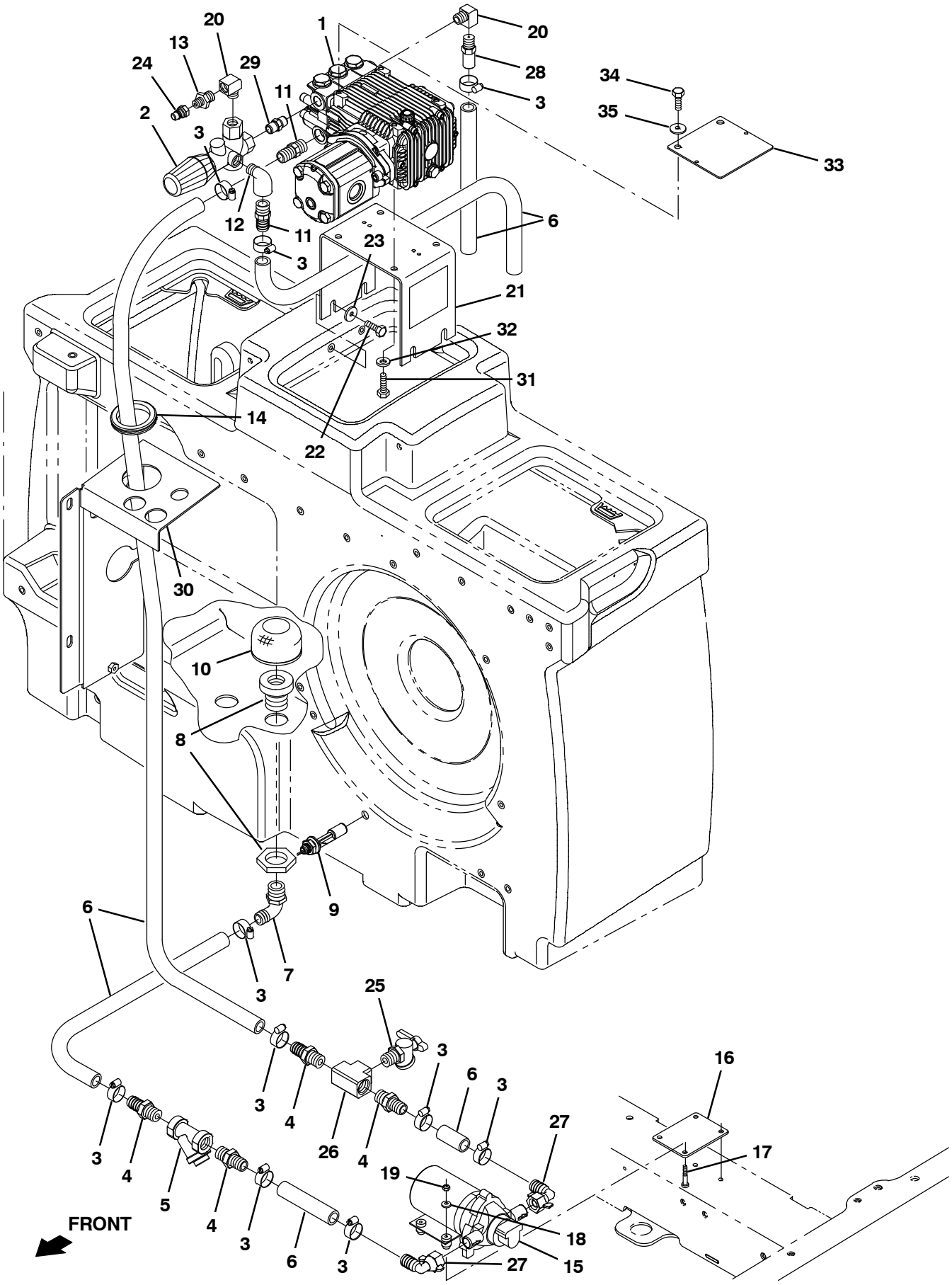

356692 – M20

Fig. 34 – Pressure Washer Solution Group (008000–014000)

Ref.	Part No.	Serial Number	Description	Qty.
1	1225829	(008000–014000)	Pump, Hyd, Press Washer	1
2	1039046	(008000–014000)	Valve, Needle	1
3	63810	(008000–014000)	Clamp, Hose, Wormdrive, 0.56–1.06d, .56w	10
4	377334	(008000–014000)	Fitting, Brs, Str, Bm12/Pm12	4
5	1039037	(008000–014000)	Filter, Y, In–Line, .75	1
6	1045034	(008000–014000)	Hose, Afmkt, Pvc, Wir, 0.75id, 08ft, Clr	1
7	1041351	(008000–014000)	Fitting, Brs, E90, Bm12/Pm12	1
8	377349	(008000–014000)	Fitting, Plstc, Pf12/Pf12, Bh	1
9	385685	(008000–014000)	Sensor, Level, Liq, 14vdc 01a .62–11	1
10	1027290	(008000–014000)	Filter, Soltn, 020mesh, Pm12 3.1d 02.6l	1
11	1042859	(008000–014000)	Fitting, Brs, Str, Bm12/Pm08	2
12	1042579	(008000–014000)	Fitting, Brs, E90, Pf08/Pm06	1
13	1044428	(008000–014000)	Fitting, Brs, Str, Pm04/Pm06 [Hp]	1
14	10632–19	(008000–014000)	Grommet, Rbr, 2.13id, F/2.5h, .12 Matl	1
15	1026743	(008000–014000)	Pump, Diaphragm	1
16	1027007	(008000–014000)	Plate, Mtg, Pump	1
17	06939	(008000–014000)	Screw, Pan, Phl, M5 X 0.80 X 45, 4.8	4
18	19066	(008000–014000)	Washer, Flat, 0.25b 0.56d .05, Pl, 10	4
19	06549	(008000–014000)	Nut, Hex, Lock, M5 X 0.80, Nl	2
20	24584	(008000–014000)	Fitting, Brs, E90, Pf06/Pm06, Spcl	2
21	9016315	(008000–014000)	Bracket, Mtg, Pump, Hp, Replmt	1
22	15675	(008000–014000)	Screw, Hex, M8 X 1.25 X 16, Ss	1
23	32491	(008000–014000)	Washer, Flat, 0.31, Std	1
24	1042191	(008000–014000)	Fitting, Ss, Qdc, Mal	1
25	1224328	(008000–014000)	Valve, Drain, Pm12, Qtr Turn	1
26	1224329	(008000–014000)	Fitting, Tee, Pf12/Pf12/Pf12, Brs	1
27	1231375	(008000–014000)	Fitting, Plstc, E90, Bm12/Pf08	2
28	1227137	(008000–014000)	Valve, Hyd, Press Washer	1
29	1224331	(008000–014000)	Fitting, Brs, Str, Pm06/ Pm06	1
30	1225174	(008000–014000)	Bracket Wldt, Mtg	1
31	16931	(008000–014000)	Screw, Hex, M8 X 1.25 X 20, 8.8	3
32	1017218	(008000–014000)	Washer, Flat, 0.32b 1.00d .12, Ss	3
33	1225146	(008000–014000)	Plate, Mtg, Light, Hp Spray (Flashing or Strobe Light Option Only)	1
34	16931	(008000–014000)	Screw, Hex, M8 X 1.25 X 20, 8.8 (Flashing or Strobe Light Option Only)	2
35	1017218	(008000–014000)	Washer, Flat, 0.32b 1.00d .12, Ss (Flashing or Strobe Light Option Only)	2

Fig. 35 – Pressure Washer Solution Group (014001–)

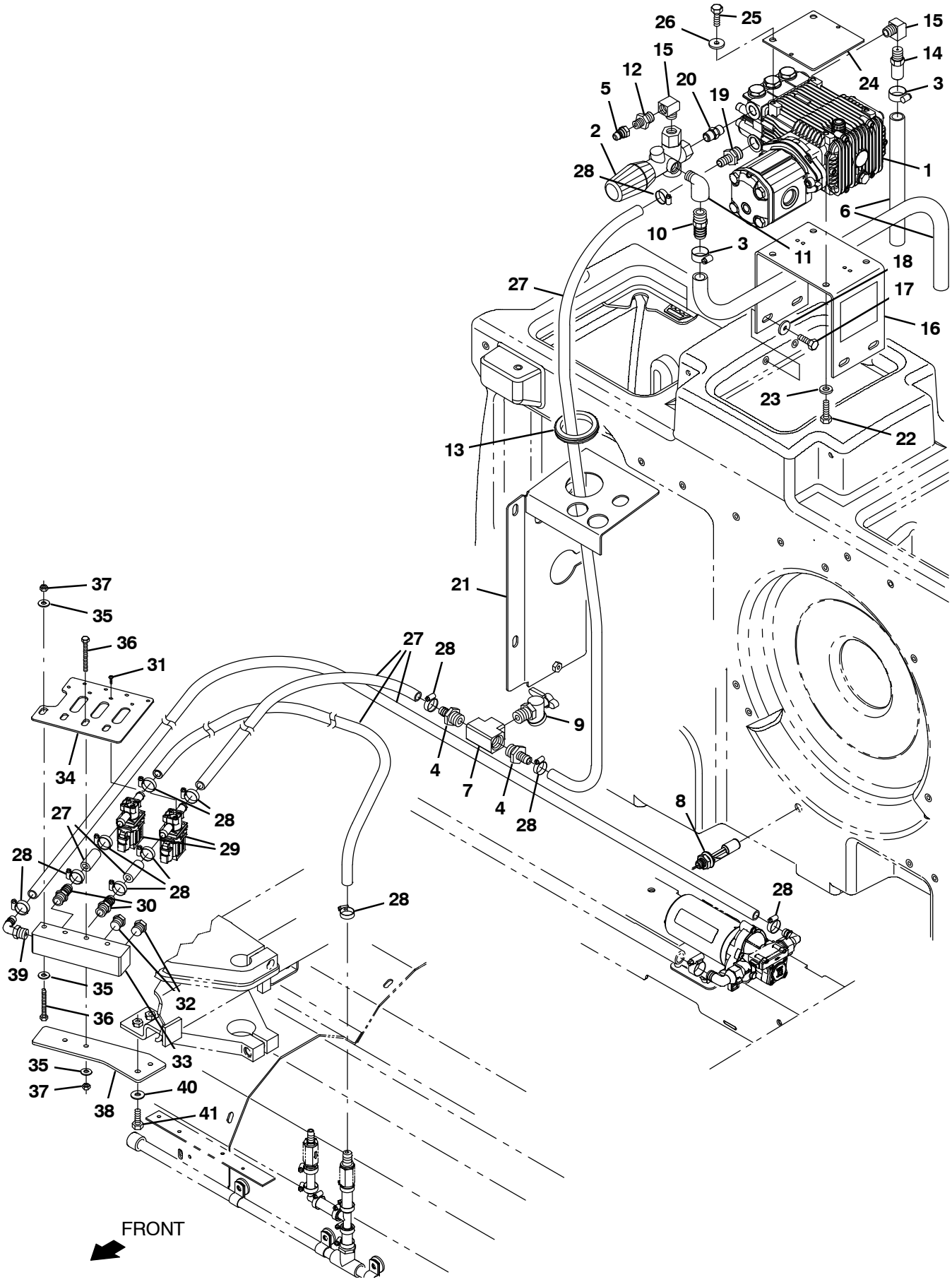

357105 – M20

Fig. 35 – Pressure Washer Solution Group (014001–)

Ref.	Part No.	Serial Number	Description	Qty.
1	1225829	(014001–)	Pump, Hyd, Press Washer	1
2	1039046	(014001–)	Valve, Needle	1
3	63810	(014001–)	Clamp, Hose, Wormdrive, 0.56–1.06d, .56w	2
4	79273–1	(014001–)	Fitting, Plstc, Str, Bm08/Pm12	2
5	1042191	(014001–)	Fitting, Ss, Qdc, Mal	1
6	1045034	(014001–)	Hose, Afmkt, Pvc, Wir, 0.75id, 08ft, Clr	1
7	1224329	(014001–)	Fitting, Tee, Pf12/Pf12/Pf12, Brs	1
8	385685	(014001–)	Sensor, Level, Liq, 14vdc 01a .62–11	1
9	1224328	(014001–)	Valve, Drain, Pm12, Qtr Turn	1
10	1042859	(014001–)	Fitting, Brs, Str, Bm12/Pm08	1
11	1042579	(014001–)	Fitting, Brs, E90, Pf08/Pm06	1
12	1044428	(014001–)	Fitting, Brs, Str, Pm04/Pm06 [Hp]	1
13	10632–19	(014001–)	Grommet, Rbr, 2.13id, F/2.5h, .12 Matl	1
14	1227137	(014001–)	Valve, Hyd, Press Washer	1
15	24584	(014001–)	Fitting, Brs, E90, Pf06/Pm06, Spcl	2
16	9016315	(014001–)	Bracket, Mtg, Pump, Hp, Replmt	1
17	15675	(014001–)	Screw, Hex, M8 X 1.25 X 16, Ss	1
18	32491	(014001–)	Washer, Flat, 0.31, Std	1
19	79273–4	(014001–)	Fitting, Plstc, Str, Bm08/Pm08	1
20	1224331	(014001–)	Fitting, Brs, Str, Pm06/ Pm06	1
21	1225174	(014001–)	Bracket Wldt, Mtg	1
22	16931	(014001–)	Screw, Hex, M8 X 1.25 X 20, 8.8	3
23	1017218	(014001–)	Washer, Flat, 0.32b 1.00d .12, Ss	3
24	1225146	(014001–)	Plate, Mtg, Light, Hp Spray (Flashing or Strobe Light Option Only)	1
25	16931	(014001–)	Screw, Hex, M8 X 1.25 X 20, 8.8 (Flashing or Strobe Light Option Only)	2
26	1017218	(014001–)	Washer, Flat, 0.32b 1.00d .12, Ss (Flashing or Strobe Light Option Only)	2
27	1011835	(014001–)	Hose, Afmkt, Pvc, Brd, 0.50id, 20.0ft, Clr	1
28	54333	(014001–)	Clamp, Hose, Wormdrive, 0.31–0.88d, .31w	12
29	1076870	(014001–)	Valve, Water, Solenoid [12vdc, Bm08/Bm08]	2
30	64743	(014001–)	Fitting, Plstc, Str, Bm08/Pm06	2
31	1257563	(014001–)	Screw, Pan, Torx, 06–19 X 0.38, F/ Plstc	4
32	630146	(014001–)	Fitting, Plug, Pm06, Hdpe	2
33	1254833	(014001–)	Manifold, Soln	1
34	1254856	(014001–)	Plate, Manifold, Mtg	1
35	32490	(014001–)	Washer, Flat, 0.25, Std	6
36	1257800	(014001–)	Screw, Hex, M6 X 1.00 X 60, Ss, Fl	4
37	08712	(014001–)	Nut, Hex, Lock, M6 X 1.00, Nl, Ss	4
38	1077124	(014001–)	Bracket, Manifold, Stratus	1
39	64778	(014001–)	Fitting, Plstc, E90, Bm08/Pm06	1
40	01685	(014001–)	Washer, Flat, 0.38b 0.88d .08, Ss	2
41	09010	(014001–)	Screw, Hex, M8 X 1.25 X 25, Ss	2

Fig. 36 – Pressure Washer Hydraulic Hoses Group

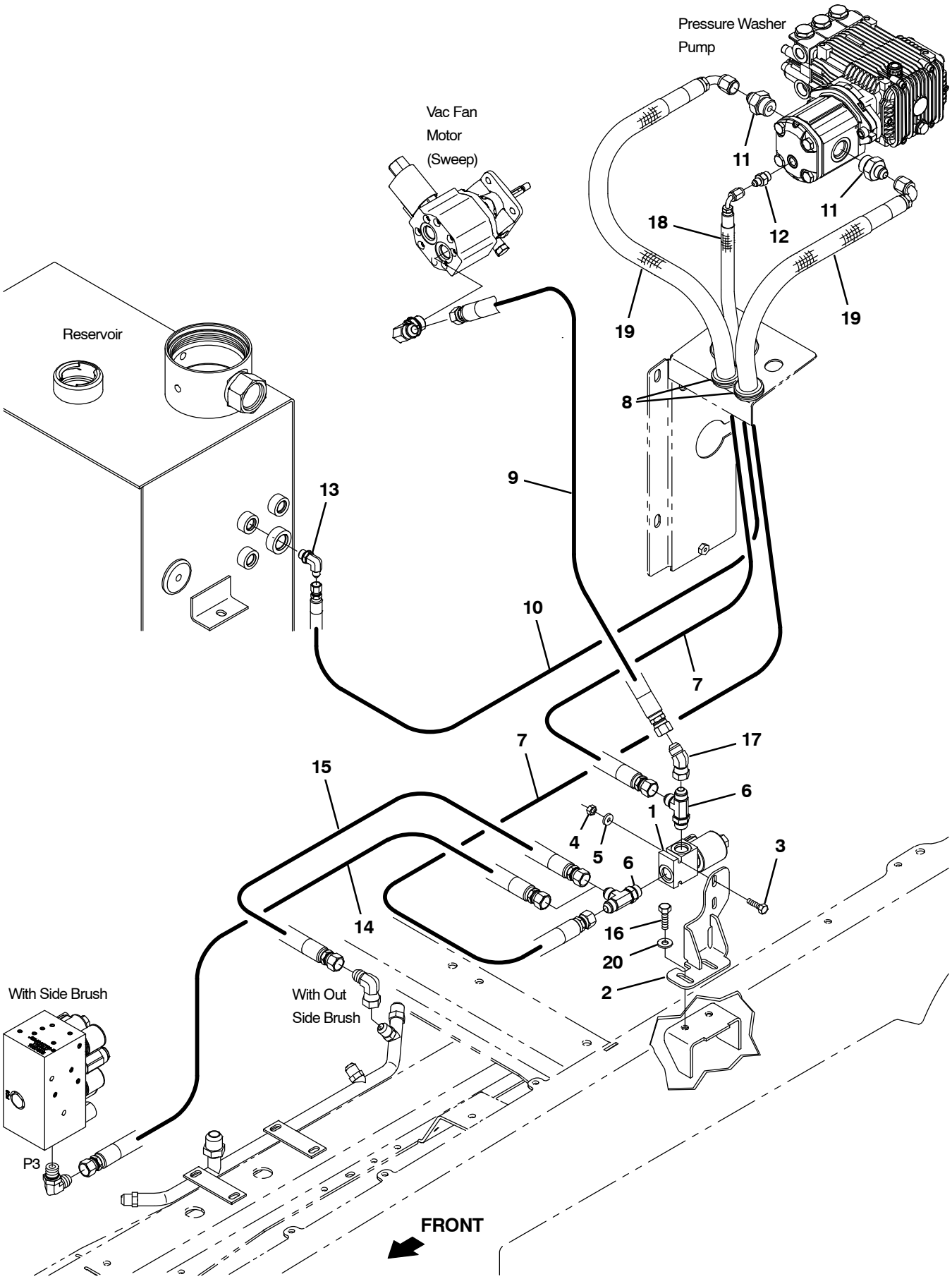

356693 – M20, T20, G

Fig. 36 – Pressure Washer Hydraulic Hoses Group

Ref.	Part No.	Serial Number	Description	Qty.
1	1038571	(008000–)	Valve, Hyd, Press Washer	1
2	1225144	(008000–)	Bracket, Valve, Mtg	1
3	06949	(008000–)	Screw, Hex, M6 X 1.00 X 50, 8.8	2
4	08712	(008000–)	Nut, Hex, Lock, M6 X 1.00, Nl, Ss	2
5	32490	(008000–)	Washer, Flat, 0.25, Std	2
6	40755	(008000–)	Fitting, Hyd, Tee, Jm08/Jm08/Om08, Run	2
7	1226044	(008000–)	Hose, Hyd, Tc08, Jfoee90/Jf08str, 72	2
8	10632–14	(008000–)	Grommet, Rbr, 1.00id, F/1.4h, .12 Matl	2
9	1036965	(008000–)	Hose, Hyd, Tc08, Jf08str/Jf08str, 034.0	1
10	34379	(008000–)	Hose, Hyd, Med04, Jf04e90/Jf04str, 072.0	1
11	42227	(008000–)	Fitting, Hyd, Str, Jm08/Om12	2
12	55685	(008000–)	Fitting, Hyd, Str, Jm04/Om06	1
13	47638	(008000–)	Fitting, Hyd, E90, Jm04/Om06	1
14	1037072	(008000–)	Hose, Hyd, Tc08, Jf08str/Jf08str, 052.0	1
15	1036902	(008000–)	Hose, Hyd, Tc08, Jf08str/Jf08str, 039.0	1
16	09010	(008000–)	Screw, Hex, M8 X 1.25 X 25, Ss	2
17	07797	(008000–)	Fitting, Hyd, E45, Jf08/Jm08	1
18	1224326	(008000–)	Sleeve, Nyl, 0.69id 20.0l [Asb11]	1
19	1224327	(008000–)	Sleeve, Nyl, 1.06id 22.0l [Asb15]	2
20	32491	(008000–)	Washer, Flat, 0.31, Std	2

Fig. 37 – Wet Dust Control Hopper Cover Group (010900–)

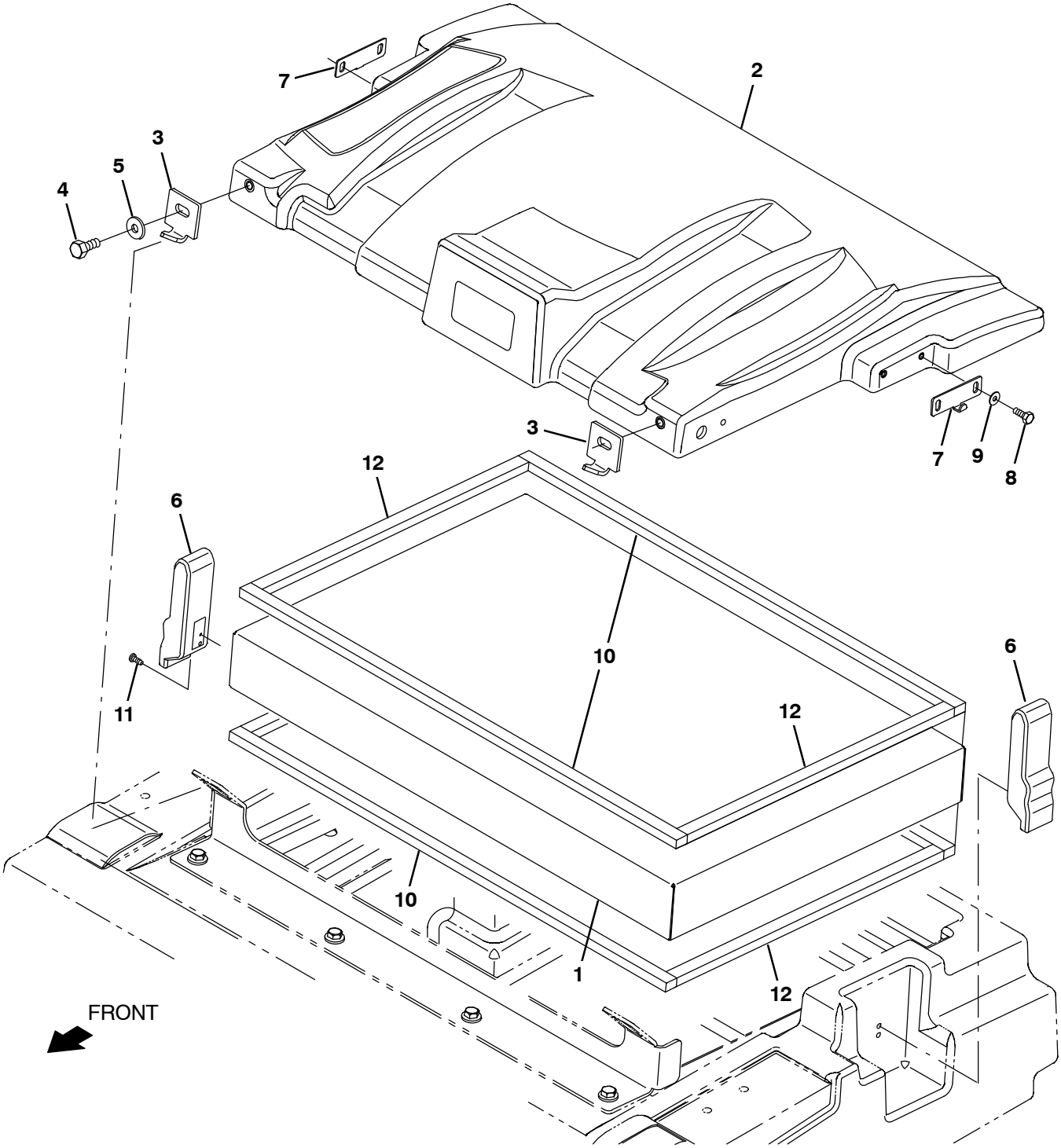

356888 – M20

Fig. 37 – Wet Dust Control Hopper Cover Group (010900–)

Ref.	Part No.	Serial Number	Description	Qty.
1	1076414	(010900–)	Panel, Filler, Filter [M20/30 Wet Sweep]	1
2	1041006	(010900–)	Cover, Hppr	1
3	1018207	(010900–)	Bar, Mtg, Hppr Cover	2
4	09291	(010900–)	Screw, Hex, M10 X 1.5 X 20, Ss	2
5	1014563	(010900–)	Washer, Flat, 0.40b 1.12d .12, Ss	2
6	1222019	(010900–)	Latch, Yellow	2
7	1041984	(010900–)	Bracket, Cover, Hppr	2
8	15678	(010900–)	Screw, Hex, M6 X 1.0 X 16, Ss	4
9	01684	(010900–)	Washer, Flat, 0.25, Ss	4
10	1015239	(010900–)	Seal, Afmkt, Ure, Adh, 0.50, 0.75w 03ft	4
11	09200	(010900–)	Screw, Pan, M5 X 0.8 X 12, Ss	4
12	1015241	(010900–)	Seal, Afmkt, Ure, Adh, 0.50, 0.75w 02ft	4

Fig. 38 – Fire Extinguisher Kit

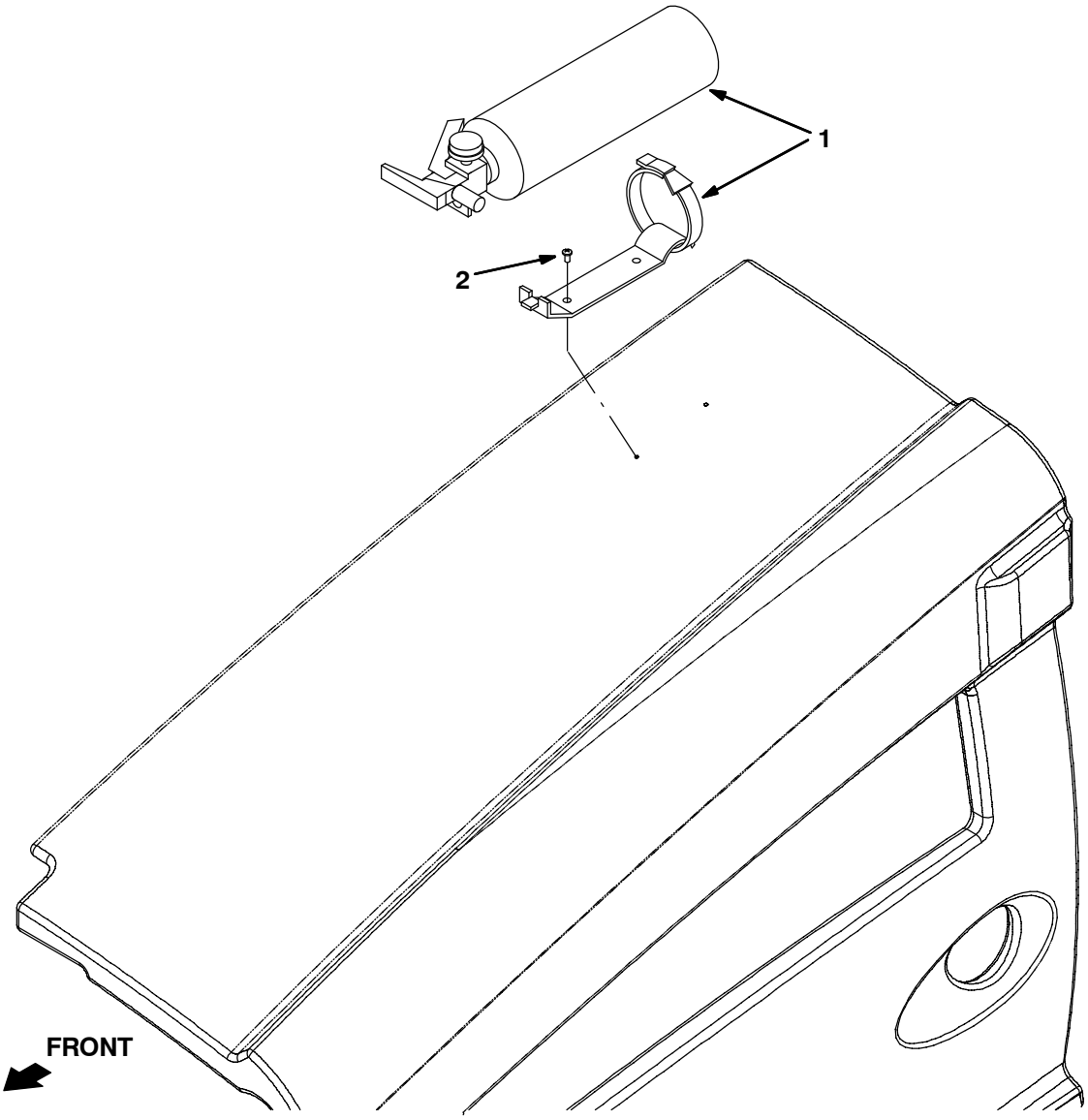

354484

	Ref.	Part No.	Serial Number	Description	Qty.
▽		9001316	(008000–)	Extinguisher Kit, Fire, Ci [M20/T20/M30]	1
▲	1	25312	(008000–)	Extinguisher, Fire, 2.5 Lb Dry	1
▲	2	382320	(008000–)	Screw, Pan, #12–16 X 0.50, F/ Plstc	2

Fig. 39 – Frame Tie Down and Tow Group

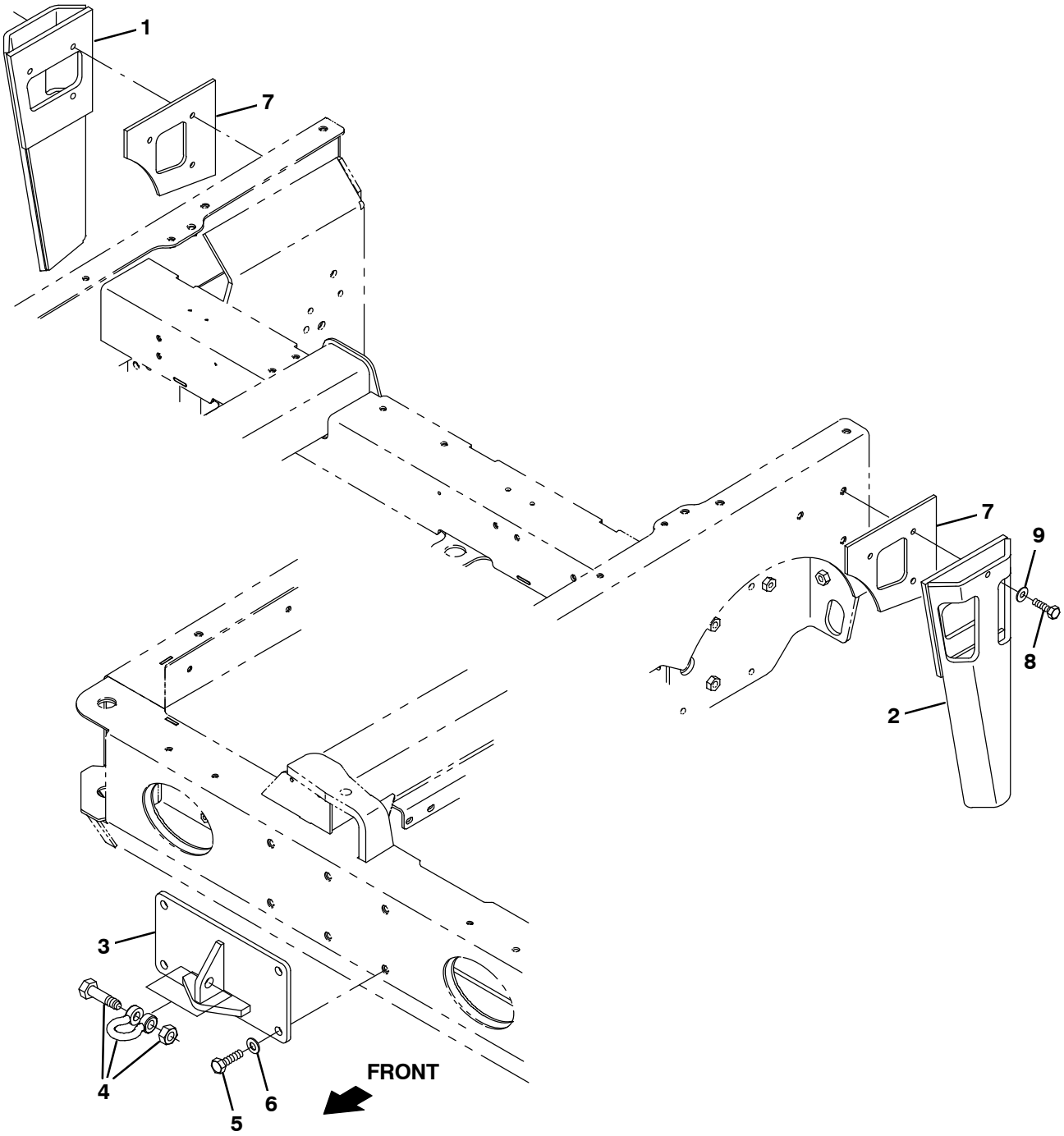

356970 – M20, T20

Ref.	Part No.	Serial Number	Description	Qty.
1	1076696	(008000–)	Guard Wldt, Sqge, Tie–Down, Side, Rh	1
2	1076698	(008000–)	Guard Wldt, Sqge, Tie–Down, Side, Lh	1
3	1076740	(008000–)	Tow Wldt, Bumper, Front	1
4	1076741	(008000–)	Anchor [Shackle], .50 Bolt	1
5	06968	(008000–)	Screw, Hex, M12 X 1.75 X 35, 8.8	4
6	32486	(008000–)	Washer, Flat, 0.53b 1.06d .10, Stl, Pl	4
7	1076699	(008000–)	Plate, Shim, Guard, Sqge, Tie–Down	1
8	77347	(008000–)	Screw, Hex, M10 X 1.50 X 35, Ss	6
9	32492	(008000–)	Washer, Flat, 0.38, Std	6

Fig. 40 – Rear Squeegee Guard Group

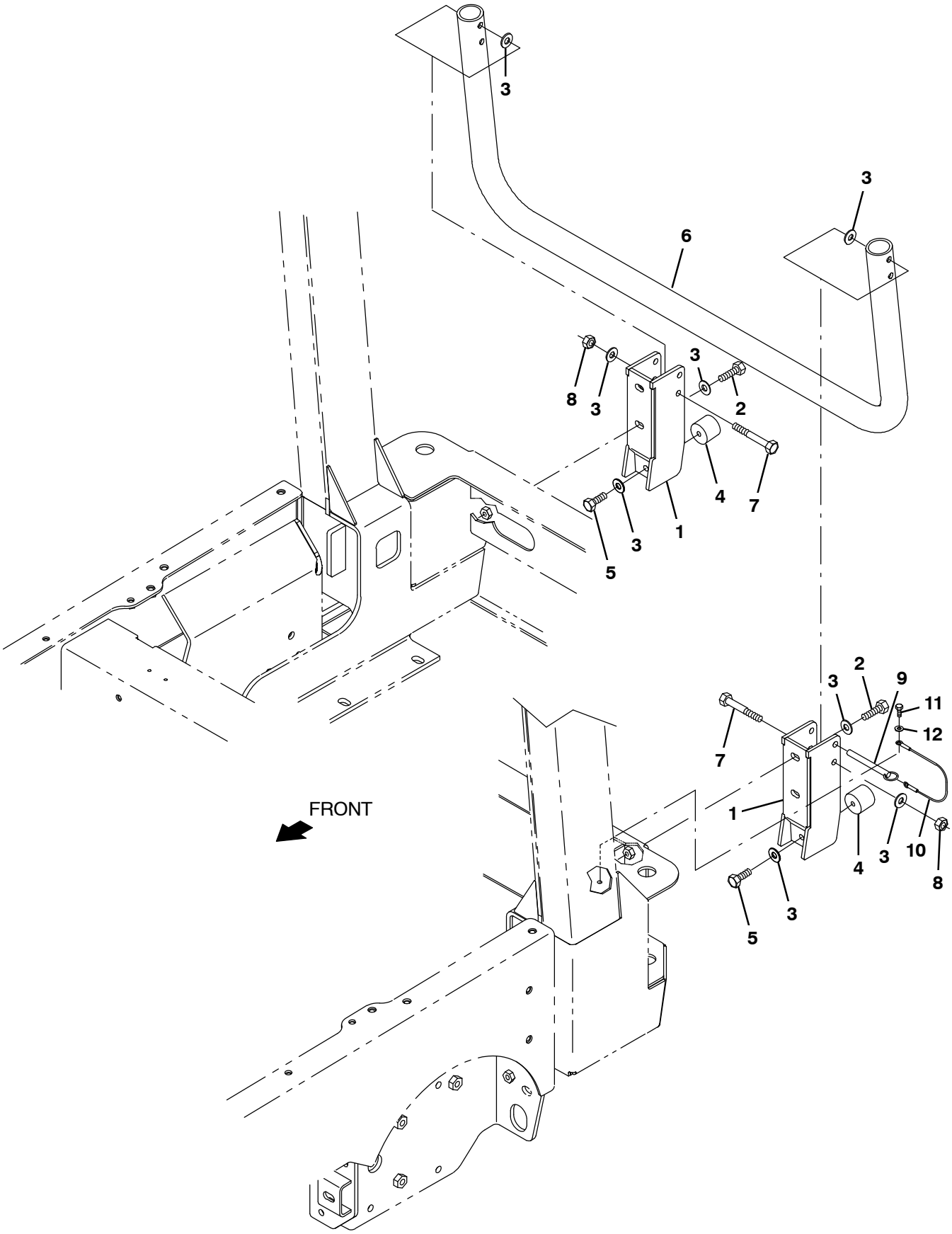

356972 – M20

Fig. 40 – Rear Squeegee Guard Group

Ref.	Part No.	Serial Number	Description	Qty.
1	1027560	(008000–)	Bracket Wldt, Guard, Sqge	2
2	39284	(008000–)	Screw, Hex, M10 X 1.50 X 35, 8.8	4
3	32492	(008000–)	Washer, Flat, 0.38, Std	12
4	1024977	(008000–)	Bumper, Ure, 1.50d 1.25l	2
5	21196	(008000–)	Screw, Hex, .38–16 X 0.88, G5	2
6	1054338	(008000–)	Guard Wldt, Sqge	1
7	06965	(008000–)	Screw, Hex, M10 X 1.50 X 80, 8.8	2
8	41430	(008000–)	Nut, Hex, Lock, M10 X 1.5, Nl	2
9	369359	(008000–)	Pin, Hitch, .375d X 3.12l, Pl	1
10	57702	(008000–)	Cable, Glv .06d 012.0l .26eye /.26eye	1
11	55845	(008000–)	Screw, Hex, M5 X 0.80 X 16, Fmg	1
12	01683	(008000–)	Washer, Flat, 10, Ss	1

Fig. 41 – Front Cover Latch Group

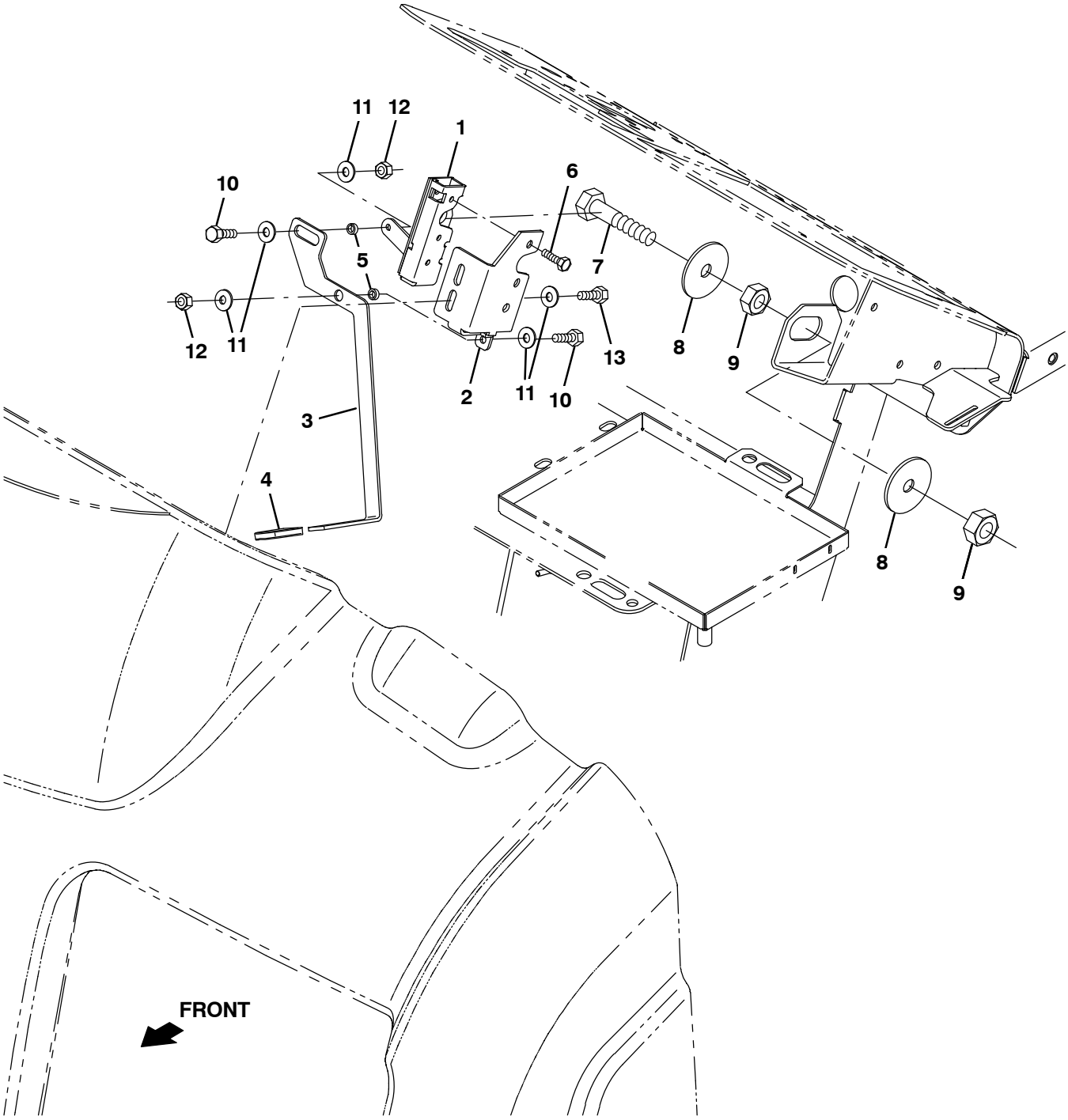

356971 – M20, T20

Fig. 41 – Front Cover Latch Group

Ref.	Part No.	Serial Number	Description	Qty.
1	59661	(008000–)	Latch	1
2	1076703	(008000–)	Bracket, Mtg, Latch	1
3	1076704	(008000–)	Lever, Latch	1
4	222190	(008000–)	Grip, Handle	1
5	80491	(008000–)	Sleeve, P/M, 0.25b 0.38d 0.2l [430ss]	2
6	25046	(008000–)	Screw, Hex, .25–20 X 1.00, G5	3
7	32895	(008000–)	Screw, Hex, .50–13 X 3.50, G5	1
8	04414	(008000–)	Washer, Flat, 0.53b 1.88d .12, Stl, Pl	2
9	32523	(008000–)	Nut, Hex, Jam, .50–13	2
10	06943	(008000–)	Screw, Hex, M6 X 1.00 X 20, 8.8	2
11	32490	(008000–)	Washer, Flat, 0.25, Std	8
12	08708	(008000–)	Nut, Hex, Lock, M6 X 1.00, Nl	2
13	06942	(008000–)	Screw, Hex, M6 X 1.00 X 16, 8.8	2

Fig. 42 – Detergent Metering Group (014001–)

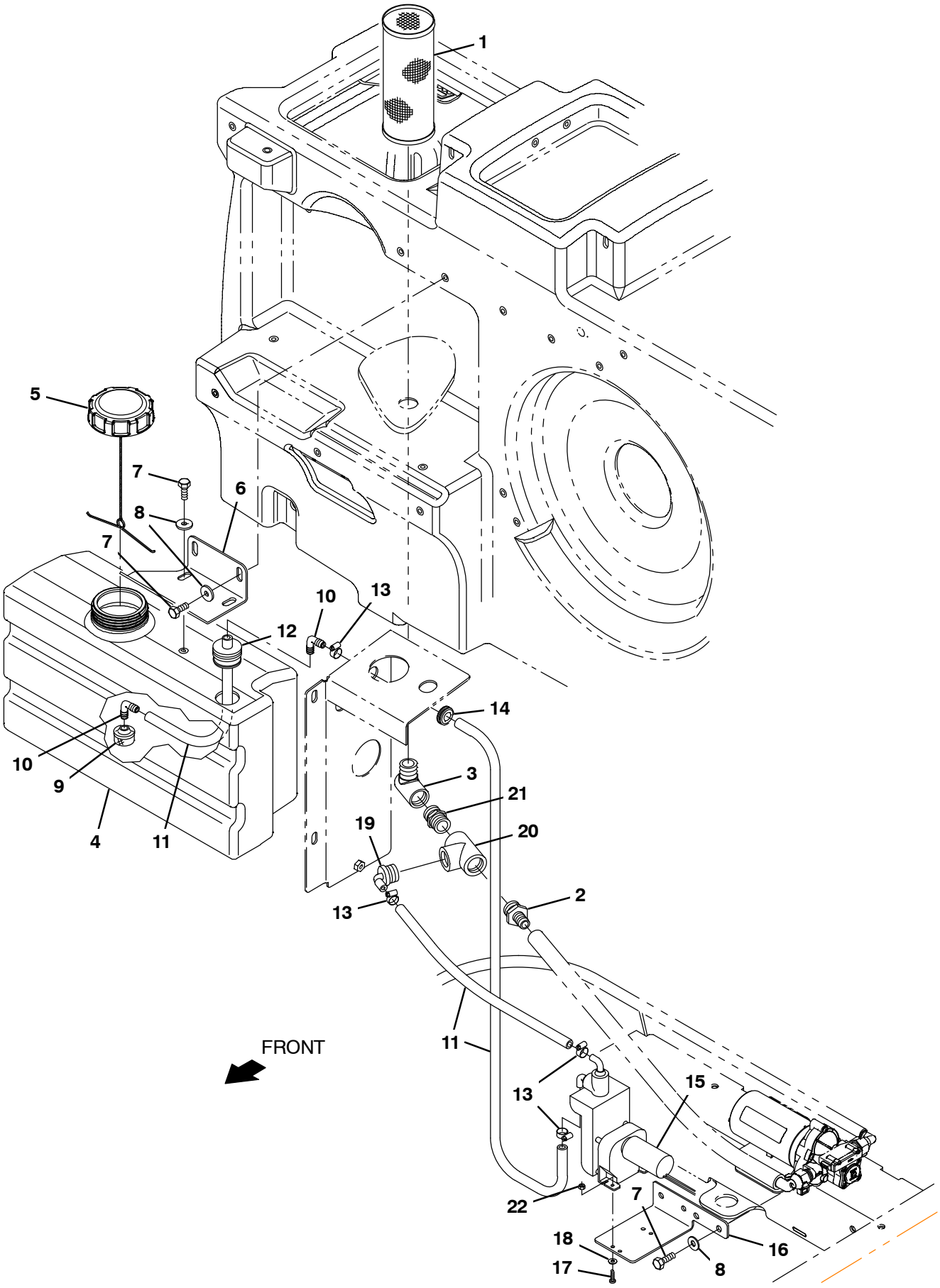

357107 - M20

Fig. 42 - Detergent Metering Group (014001-)

Ref.	Part No.	Serial Number	Description	Qty.
1	1057465	(014001-)	Filter, Soltn, 080mesh, Pm12 3.2d 08.0l	1
2	365095	(014001-)	Fitting, Plstc, Str, Bm10/Pm12	1
3	69785	(014001-)	Fitting, Plstc, E90, Pf12/Pm12	1
4	1022229	(014001-)	Tank, Detgt, Trimmed	1
5	1011885	(014001-)	Cap, Tank	1
6	1025159	(014001-)	Bracket, Mtg, Detgt And Spray Wand	6
7	09740	(014001-)	Screw, Hex, M8 X 1.25 X 20, Ss	6
8	1017218	(014001-)	Washer, Flat, 0.32b 1.00d .12, Ss	1
9	20952	(014001-)	Screen, Pump	1
10	20951	(014001-)	Fitting, Plstc, E90, Bm06/Bm06	2
11	1014930	(014001-)	Hose, Afmkt, Pvc, Clr, 0.38id, 08ft	1
12	20944	(014001-)	Grommet, Pye, 0.37id, F/1.5h, .13 Matl	1
13	43844	(014001-)	Clamp, Hose, Wormdrive, 0.25- 0.62d, .31w	1
14	10632- 2	(014001-)	Grommet, Rbr, 0.62id, F/0.9h, .12 Matl	1
15	73260	(014001-)	Pump, Detgt, 14vdc, 150ml/Min 20psi	1
16	1021325	(014001-)	Bracket, Mtg, Valve	1
17	24265	(014001-)	Screw, Pan, Phl, M4 X 0.70 X 16, Ss	2
18	01683	(014001-)	Washer, Flat, 10, Ss	2
19	79484	(014001-)	Fitting, Plstc, E90, Bm06/Pm12, Nyl	1
20	42133A	(014001-)	Fitting, Plstc, Tee, Pf12/Pf12/Pf12	1
21	24544	(014001-)	Fitting, Plstc, Str, Pm12/Pm12 1.60l	1
22	33932	(014001-)	Nut, Hex, Lock, M4 X 0.7, Nl, Ss	2

Fig. 43 – Spotlight Kit, Blue

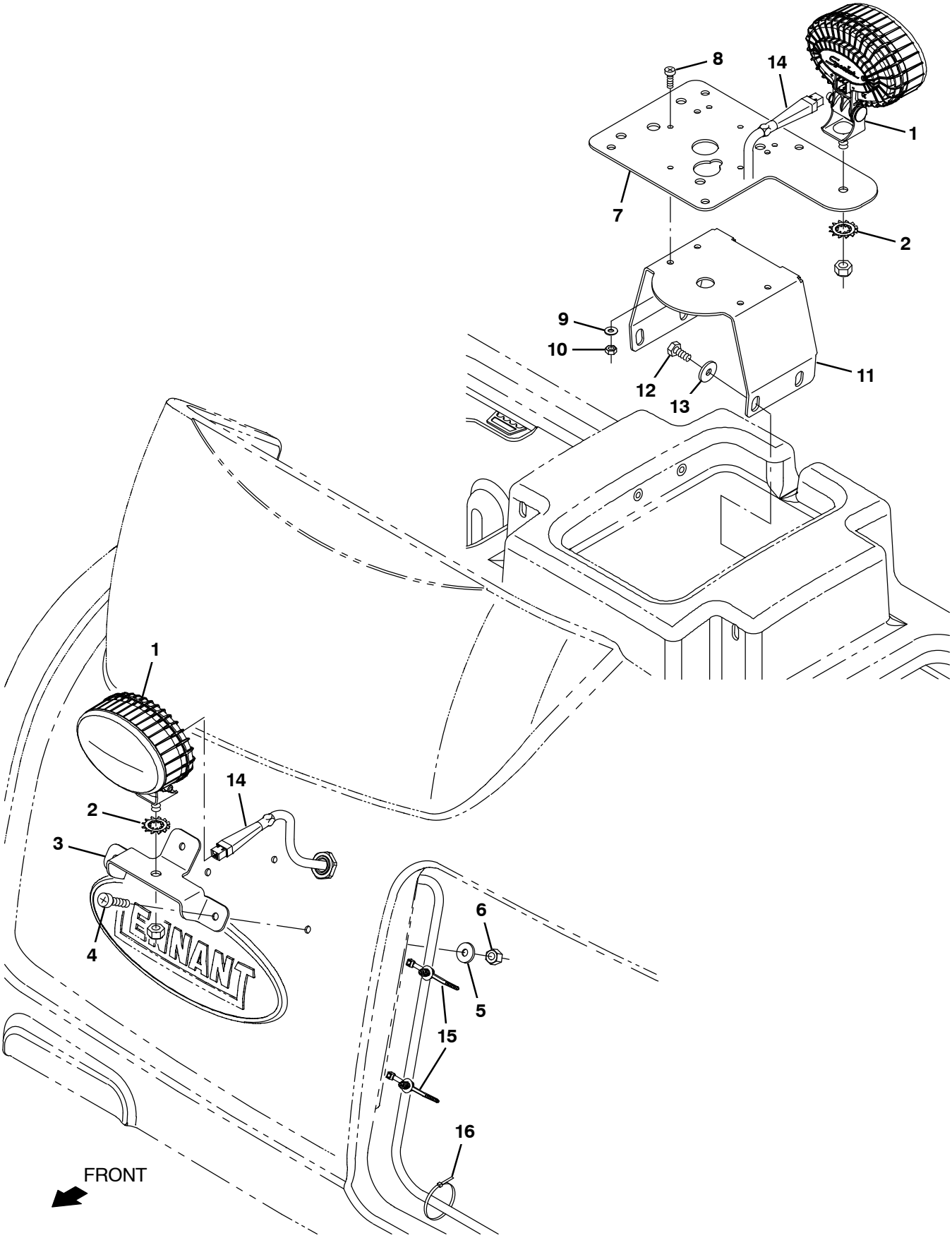

357150

Fig. 43 – Spotlight Kit, Blue

	Ref.	Part No.	Serial Number	Description	Qty.
▽		9021235	(008000–)	Spotlight Kit, Blue, Ci [T20/M20]	1
▲	1	1240687	(008000–)	Light, Spot, Blue, Led	2
▲	2	41143	(008000–)	Washer, Lock, Int–Ext, 0.50	2
▲	3	1076808	(008000–)	Brkt, Blu Spotlight, Fr, Cover Mtg	1
▲	4	1031665	(008000–)	Screw, Pan, M8 X 1.25 X 25, Blk	3
▲	5	39890	(008000–)	Washer, Flat, M8, Fendr	3
▲	6	08713	(008000–)	Nut, Hex, Lock, M8 X 1.25, Nl, Ss	3
▲	7	1076789	(008000–)	Brkt, Blu Spotlight, Rr, Frame Mtg	1
▲	8	24196	(008000–)	Screw, Pan, Phl, M5 X 0.80 X 20, Ss	4
▲	9	19066	(008000–)	Washer, Flat, 0.25b 0.56d .05, Pl, 10	4
▲	10	09739	(008000–)	Nut, Hex, Lock, M5 X 0.80, Nl, Ss	4
▲	11	1019445	(008000–)	Bracket, Sppt, Revl Light	1
▲	12	09740	(008000–)	Screw, Hex, M8 X 1.25 X 20, Ss	4
▲	13	1017218	(008000–)	Washer, Flat, 0.32b 1.00d .12, Ss	4
▲▽	14	1076999	(008000–)	Harness, Blu Spotlight [T20/M20/M30]	1
▲▲		1016029	(008000–)	Fuse, Blade, 005a, 32vdc [Atof]	1
▲	15	1210807	(008000–)	Wire, Tie [W/.25” Fir Tree Clip]	3
▲	16	763114	(008000–)	Tie, Cable, 11.3l, 2.75d Max	10

Fig. 44 – Documentation Group (Online Only)

M20, G/LP, NA

Ref.	Part No.	Serial Number	Description	Qty.
	9016000	(008000–)	Manual, Oprtr [M20 G, En, Na Sn 8000–]	1
	1032578	(008000–)	Instr, Maint, Wall Chart [M20]	1
	9016002	(008000–)	Manual, Oprtr [M20 G, Es, Na Sn 8000–]	1
	9016003	(008000–)	Manual, Oprtr [M20 G, Fr, Na, Sn 8000–]	1
	9016004	(008000–)	Manual, Oprtr [M20 G/Lpg, Jp, Sn 8000–]	1
	9016005	(008000–)	Manual, Oprtr [M20 G/Lpg, Cn, Sn 8000–]	1
	9016001	(008000–)	Manual, Parts [M20 Gas/Lp, Na Sn 8000–]	1
	9016283	(008000–)	Manual, Oprtr [M20 G/Lp, Ptb, Sn 8000–]	1
	9016006	(008000–)	Manual, Service, [M20/M30 G/D, Sn 8000–]	1
	9006257	(008000–)	Media, Cd–Rom, Training [ec–H2O Tennant]	1
	9010635	(008000–)	Manual, Service, Cd–Rom [Mit2.0l]	1

To view, print, or download the latest Parts manual, other language Operator manuals, and Use and Care Guides (wall charts), visit:

www.tennantco.com/manual

SECTION 4

Contents **Page**

Fig. 1 – Extended Scrub Pump Breakdown, 1021210 4-2
Fig. 2 – Hydraulic Motor Breakdown, 379609 . . . 4-4
Fig. 3 – Hydraulic Pump Breakdown, 1024251 . 4-6
Fig. 4 – Hydraulic Motor Breakdown, 71729 4-8
Fig. 5 – Hydraulic Motor Breakdown, 1029379 . 4-9
Fig. 6 – Hydraulic Valve Breakdown, 1072997 . 4-10
Fig. 7 – Hydraulic Valve Breakdown, 1072995 . 4-12
Fig. 8 – Hydraulic Steering Valve Breakdown, 1024260 4-14
Fig. 9 – Metering Solution Pump Breakdown, 73260 4-16
Fig. 10 – Water Pump Breakdown, 1026743 . . . 4-17
Fig. 11 – ec–H20 Module Assembly Breakdown, 9007882 4-18
Fig. 12 – Seat Breakdown, 9018721 4-20
Fig. 13 – Steering Gearbox Breakdown, 9015636 4-22
Fig. 14 – FaST Injector Assembly Breakdown, 9008868 4-24
Fig. 15 – Water Pump Motor Breakdown, 1225829 4-25

Fig. 1 – Extended Scrub Pump Breakdown, 1021210

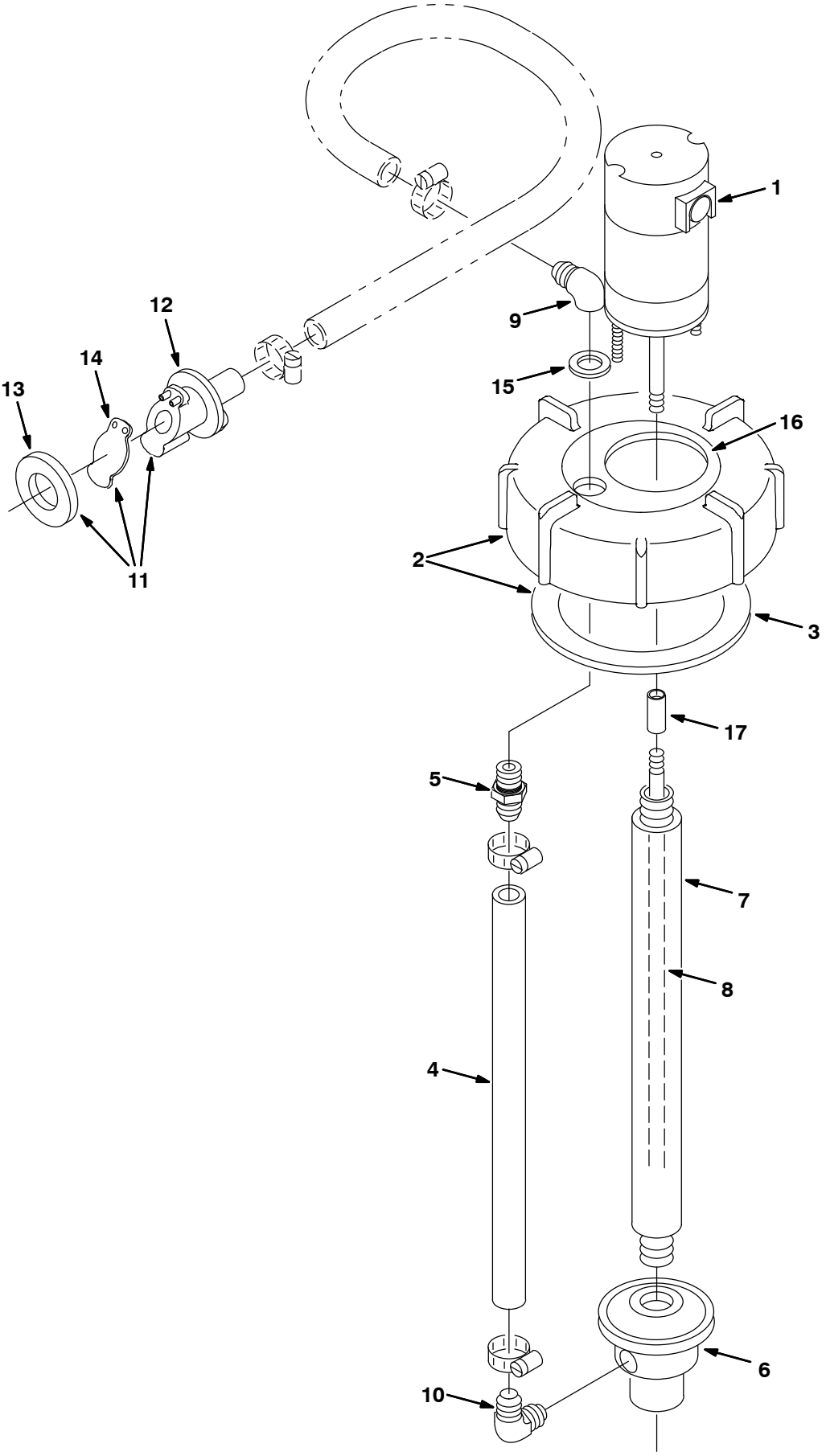

354377 – ALL

Fig. 1 – Extended Scrub Pump Breakdown, 1021210

	Ref.	Part No.	Serial Number	Description	Qty.
▽		1021210	(000000–)	Pump Assy, Column, Es	1
▲▽	1	9002708	(000000–)	Motor, Ele, 12vdc, Pump, Water	1
▲▲		78829	(000000–)	Kit, Brush, Motor, Ele	1
▲▽	2	24358	(000000–)	Cap Assy, Tank, Drain	1
▲▲	3	1031699	(000000–)	Gasket, 4.05id 5.29od .19 [Buna]	1
▲	4	78833	(000000–)	Tube, Vinyl, Pump, Water	1
▲	5	78398	(000000–)	Fitting, Plstc, Str, Bm12/Pm08, Nyl	1
▲	6	78843	(000000–)	Housing Kit, Pump, Water	1
▲	7	78836	(000000–)	Column, Pump, Water	1
▲	8	9002709	(000000–)	Shaft, Pump, Water	1
▲	9	78838	(000000–)	Fitting, E, Gr	1
▲	10	78839	(000000–)	Fitting, Plstc, E90, Pf Bm [Es Pump]	1
▲▽	11	78842	(000000–)	Kit, Valve, Check, Pump, Water	1
▲▲	12	78840	(000000–)	Valve, Check, Pump, Water	1
▲▲	13	73342	(000000–)	Gasket, .25 1.88d 1.0id [Poron]	1
▲▲	14	78841	(000000–)	Flapper, Valve, Pump, Water	1
▲	15	78830	(000000–)	Washer, Rbr	1
▲	16	22790	(000000–)	Insert, Cap, Mount, Es Pump	1
▲	17	23285	(000000–)	Sleeve, Pump, Water	1

Fig. 2 – Hydraulic Motor Breakdown, 379609

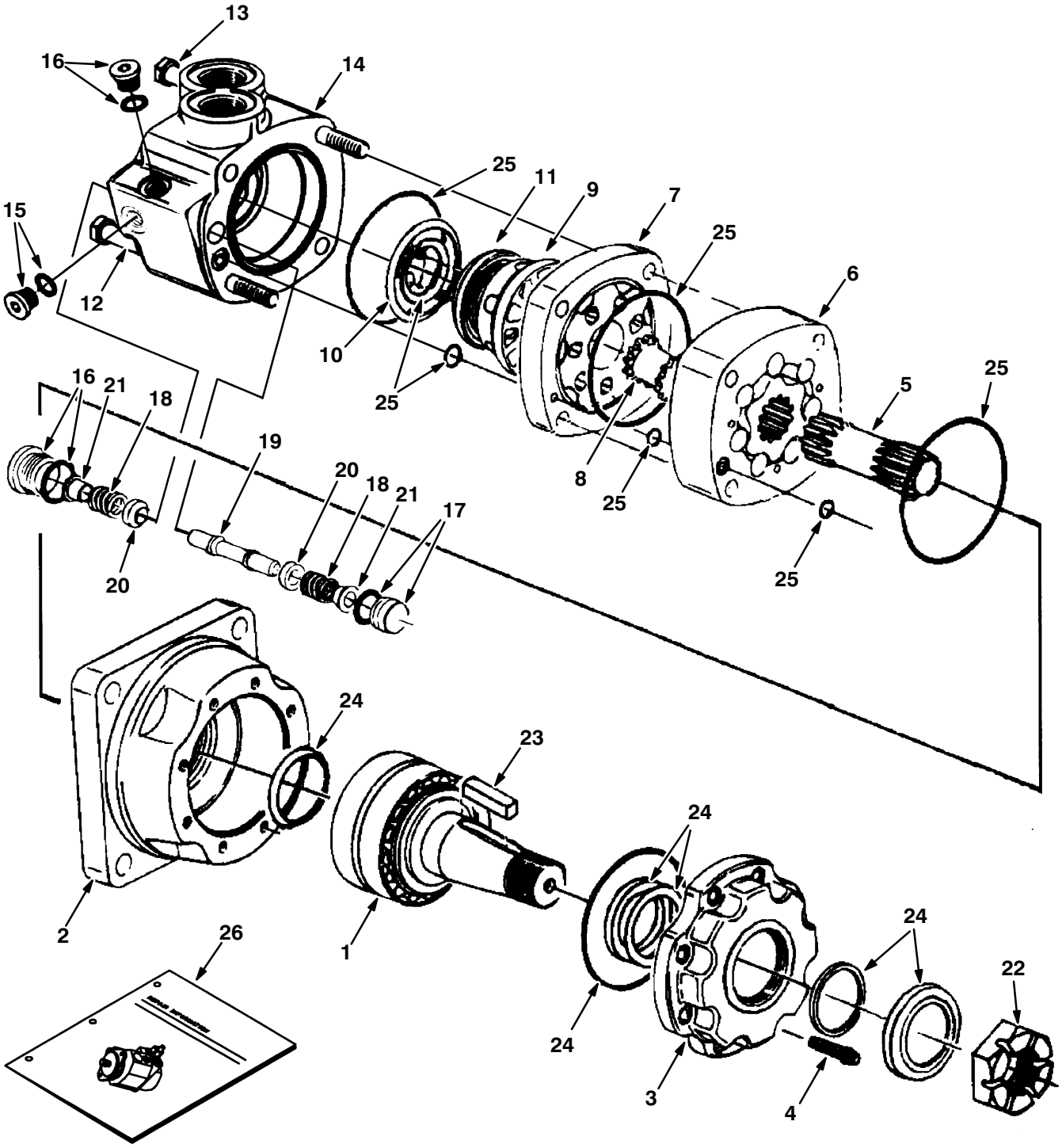

350628–09670

Fig. 2 – Hydraulic Motor Breakdown, 379609

	Ref.	Part No.	Serial Number	Description	Qty.
▽		379609	(000000–)	Motor, Hyd, Gear, [Int], 19.0 X 3000	1
▲	1	74165	(000000–)	Shaft, Motor, Hyd	1
▲	2	74166	(000000–)	Housing, Brg, Motor, Hyd	1
▲	3	74167	(000000–)	Retainer, Motor, Hyd	1
▲	4	74168	(000000–)	Screw, Cap, Motor, Hyd	8
▲	5	37616	(000000–)	Drive, Motor, Hyd	1
▲	6	37756	(000000–)	Geroler, Motor, Hyd	1
▲	7	74122	(000000–)	Plate, Valve, Motor, Hyd	1
▲	8	52405	(000000–)	Valve, Motor, Hyd	1
▲	9	74123	(000000–)	Valve, Motor, Hyd	1
▲	10	34178	(000000–)	Spring, Motor, Hyd	2
▲	11	38968	(000000–)	Ring, Motor, Hyd	1
▲	12	74125	(000000–)	Bolt, Motor, Hyd	3
▲	13	38255	(000000–)	Bolt, Motor, Hyd	1
▲	14	373297	(000000–)	Housing, Valve	1
▲	15	373298	(000000–)	Plug	1
▲	16	373260	(000000–)	Plug, Pump, Hyd, Gear	2
▲	17	373299	(000000–)	Plug	1
▲	18	373291	(000000–)	Spring	2
▲	19	373217	(000000–)	Piston, Pump, Hyd, Gear	1
▲	20	373226	(000000–)	Poppet, Pump, Hyd, Gear	2
▲	21	373236	(000000–)	Sleeve, Dashpo, Pump, Hyd, Gear	2
▲	22	45622	(000000–)	Nut, Motor, Hyd	1
▲	23	45623	(000000–)	Key, Motor, Hyd	1
▲	24	79828	(000000–)	Seal Kit, Shaft [Cl]	1
▲	25	33580	(000000–)	Seal Kit, Rear [Cl]	1
	26	79729	(000000–)	Instr, Repair, Motor, Hyd, Gear	1

Fig. 3 – Hydraulic Pump Breakdown, 1024251

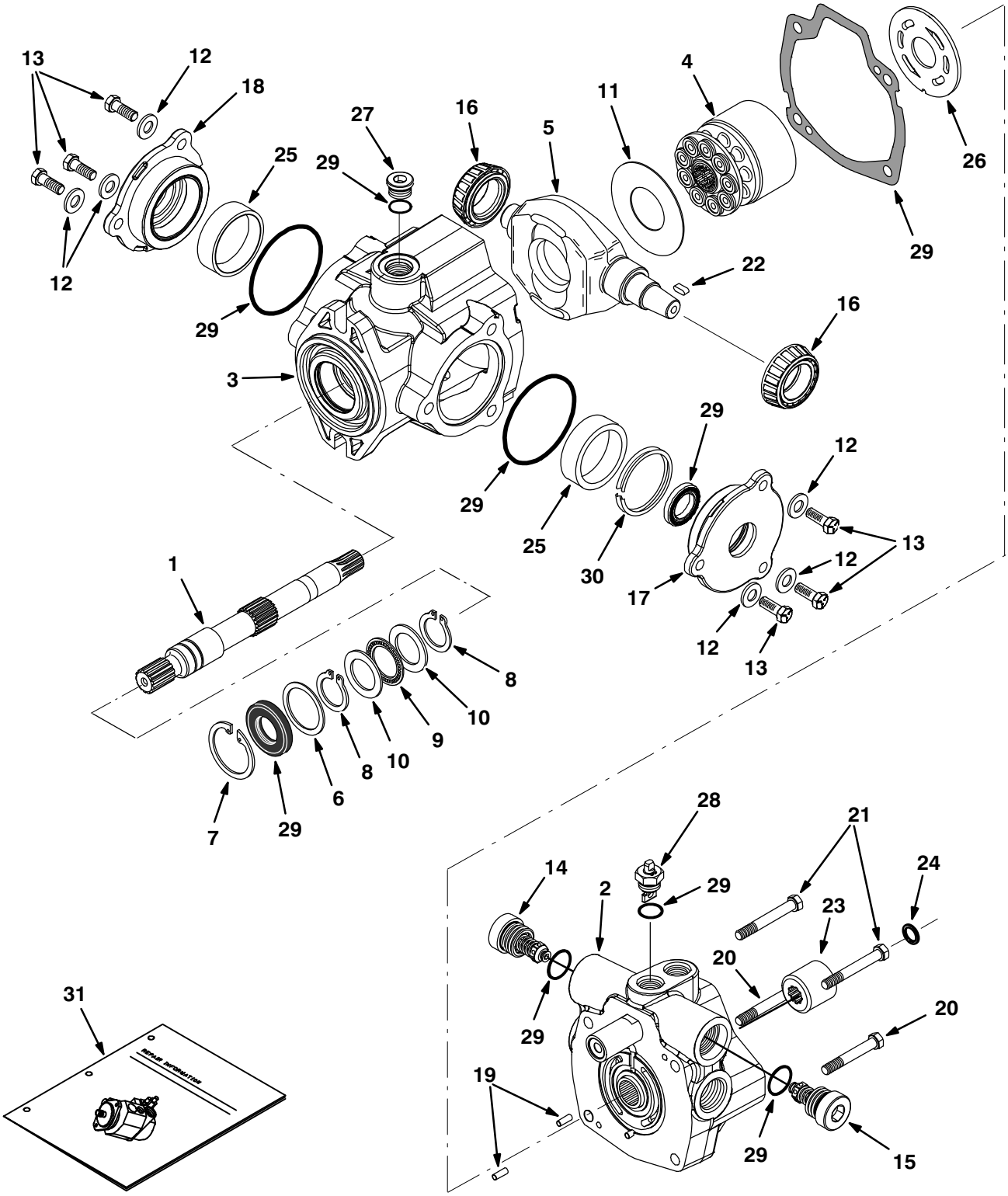

ALL

Fig. 3 – Hydraulic Pump Breakdown, 1024251

	Ref.	Part No.	Serial Number	Description	Qty.
▽		1024251	(000000–)	Pump, Hyd, Piston, Var, 1.24 4000, Cw	1
▲	1	373681	(000000–)	Shaft, Pump	1
▲	2	373427	(000000–)	Cover, End	1
▲	3	373389	(000000–)	Housing	1
▲	4	02706	(000000–)	Pump Kit, Hyd, Rotating [Cessna]	1
▲	5	373493	(000000–)	Plate, Cam	1
▲	6	70096	(000000–)	Washer, Flat, Pump, Hyd	1
▲	7	55926	(000000–)	Ring, Retaining, Pump, Hyd	1
▲	8	373434	(000000–)	Ring, Retaining	2
▲	9	74225	(000000–)	Bearing, Thrust, Pump, Hyd	1
▲	10	74226	(000000–)	Race, Brg, Pump, Hyd	2
▲	11	373327	(000000–)	Insert, Plt, Cam, Pump, Hyd	1
▲	12	373391	(000000–)	Washer, Pump, Hyd [En]	6
▲	13	373346	(000000–)	Screw, Cap	6
▲	14	373494	(000000–)	Valve, Relief, 4000 Psi	1
▲	15	373678	(000000–)	Valve, Relief, 3000 Psi	1
▲	16	373317	(000000–)	Bearing, Cone, Pump, Hyd	2
▲	17	373393	(000000–)	Plate, Cover	1
▲	18	373394	(000000–)	Plate, Cover	1
▲	19	70100	(000000–)	Pin, Dowel, Pump, Hyd	2
▲	20	373347	(000000–)	Screw, Cap	2
▲	21	373348	(000000–)	Screw, Cap	2
▲	22	74237	(000000–)	Key, Shaft, Pump, Hyd	1
▲	23	373679	(000000–)	Coupler, Pump	1
▲	24	373680	(000000–)	Ring, Lock	1
▲	25	373395	(000000–)	Bearing, Cup	2
▲	26	74180	(000000–)	Plate, Valve, Pump, Hyd	1
▲	27	13907	(000000–)	Fitting, Hyd, Plug, Om08	1
▲	28	373413	(000000–)	Actuator, Valve, By–Pass [En]	1
▲	29	373398	(000000–)	Seal Kit, Pump, Hyd	1
▲	30	373402	(000000–)	Shim Kit	1
	31	373429	(000000–)	Instr, Repair, Pump	1

Fig. 4 – Hydraulic Motor Breakdown, 71729

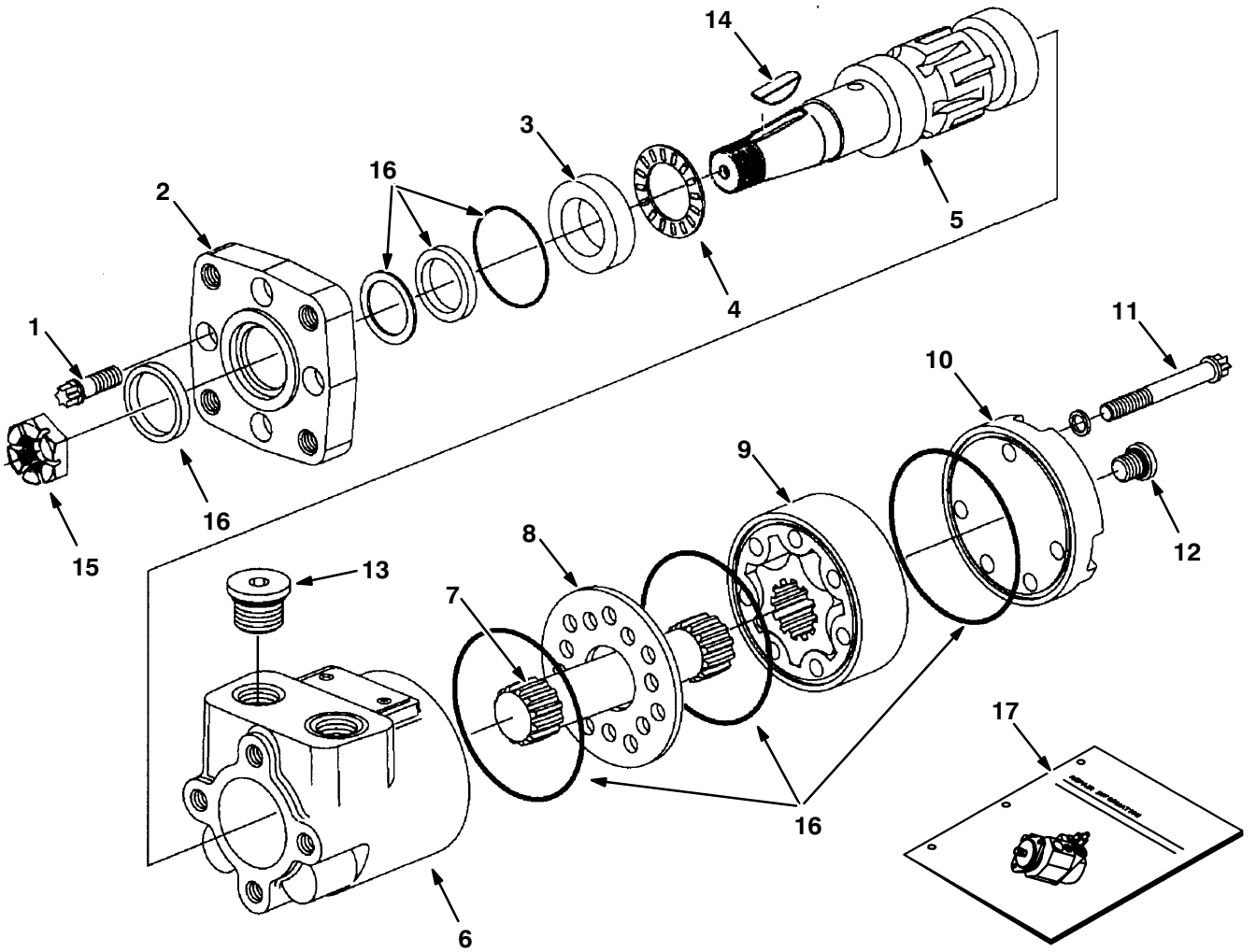

09606–09670 – ALL

	Ref.	Part No.	Serial Number	Description	Qty.
▽		71729	(000000–)	Motor, Hyd Gear In 4.5 B 1500	1
▲	1	37555	(000000–)	Screw	4
▲	2	31354	(000000–)	Flange Mounting	1
▲	3	16695	(000000–)	Race Thrust	1
▲	4	45628	(000000–)	Thrust Bearing	1
▲	5	31375	(000000–)	Shaft, Output	1
▲	6	74100	(000000–)	Housingl	1
▲	7	31379	(000000–)	Drive	1
▲	8	74094	(000000–)	Spacer Plate	1
▲	9	31383	(000000–)	Gerotor Set	1
▲	10	74095	(000000–)	End Cap	1
▲	11	65241	(000000–)	Cap Screw	5
▲	12	74098	(000000–)	Plug #4	1
▲	13	74099	(000000–)	Plug #10	2
▲	14	00500–15	(000000–)	Key–Wdruff 0.25 1.00	1
▲	15	39527	(000000–)	Nut–Hxslot .75–16 Pltd	1
▲	16	61490	(000000–)	Seal Replmt Kit	1
▲	17	74250	(000000–)	Instr. Repair Info, Motor	1

Fig. 5 – Hydraulic Motor Breakdown, 1029379

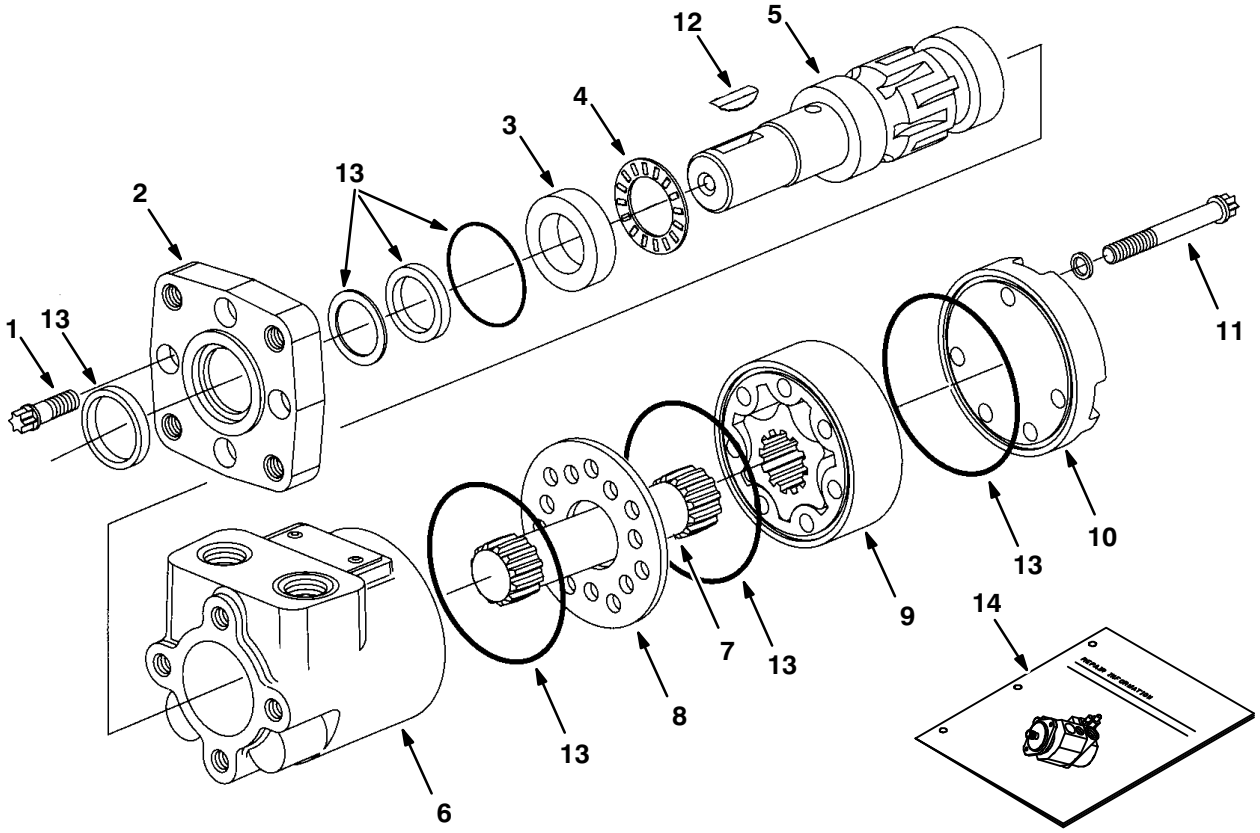

10859–09670 – ALL

	Ref.	Part No.	Serial Number	Description	Qty.
▽		1029379	(000000–)	Motor, Hyd, Gear, Int 08.9 Bi–Dir 2500	1
▲	1	37555	(000000–)	Screw, Motor, Hyd [En]	4
▲	2	31354	(000000–)	Flange, Motor, Hyd [En]	1
▲	3	16695	(000000–)	Ace, Thrust, Motor, Hyd [En]	1
▲	4	45628	(000000–)	Bearing, Thrust	1
▲	5	28854	(000000–)	Shaft, Output, Motor, Hyd [En]	1
▲	6	74100	(000000–)	Housing, Motor, Hyd [En]	1
▲	7	21955	(000000–)	Drive [Cl]	1
▲	8	74094	(000000–)	Plate, Spacer, Motor, Hyd [En]	1
▲	9	21956	(000000–)	Gerotor Set [Cl]	1
▲	10	65230	(000000–)	End Cap, Motor, Hyd [En]	1
▲	11	21958	(000000–)	Cap Screw Cl	5
▲	12	00500–15	(000000–)	Key, Woodruff, 0.25 1.00 [Asa#0808]	1
▲	13	61490	(000000–)	Seal Kit, Motor [Cl]	1
▲	14	74250	(000000–)	Instr, Motor, Hyd, Repair [En]	1

Fig. 6 – Hydraulic Valve Breakdown, 1072997

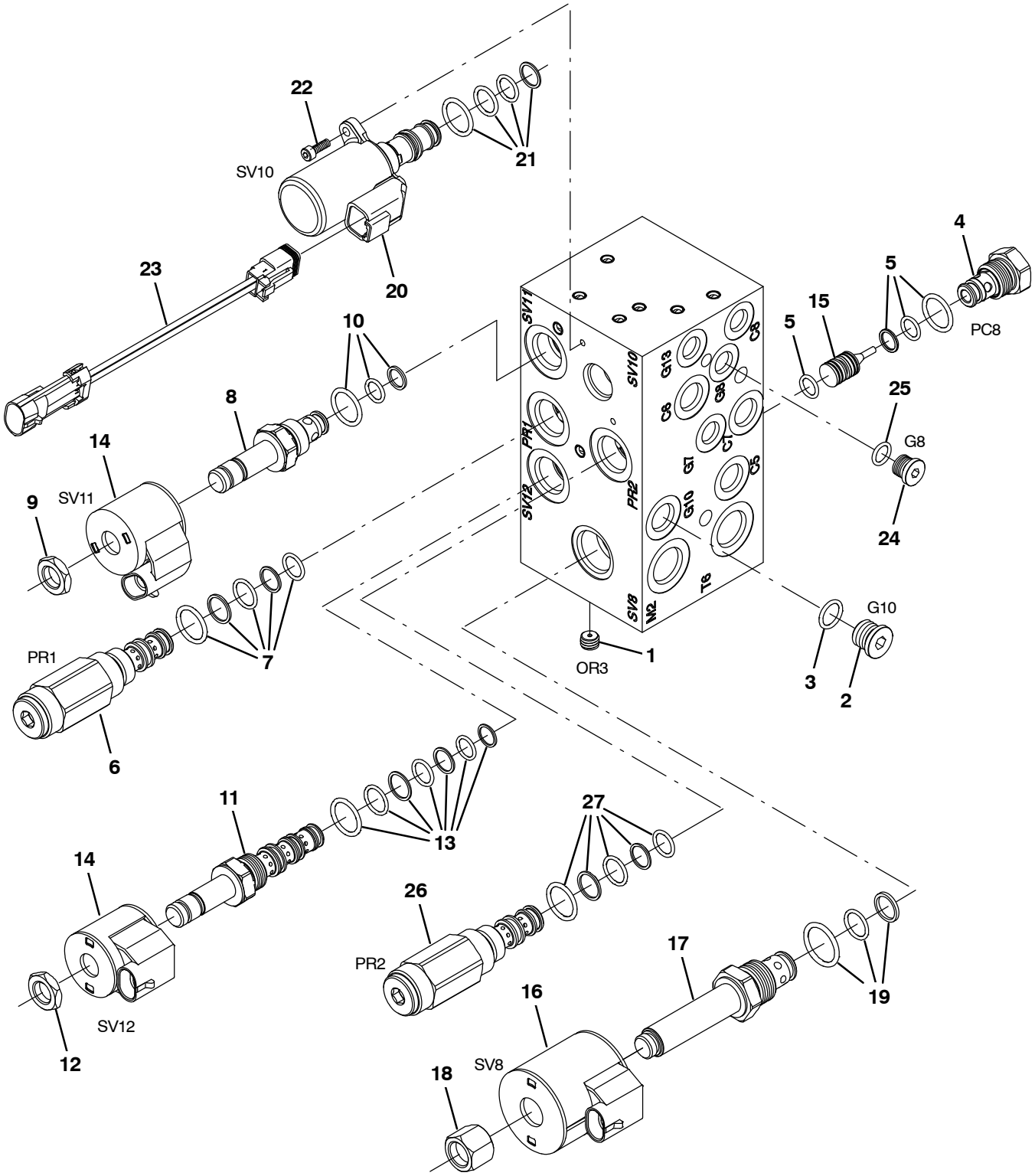

356403 – ALL

Fig. 6 – Hydraulic Valve Breakdown, 1072997

	Ref.	Part No.	Serial Number	Description	Qty.
▽		1072997	(000000–)	Valve, Cntrl, Hyd, Solenoid, 03/16gpm	1
▲	1	373633	(000000–)	Plug, Orifice, Valve, Hyd, .040	1
▲▽	2	13904	(000000–)	Fitting, Plug, Org, #6, Valve [Cec]	1
▲▲	3	77005	(000000–)	Seal, Org, .078 X 00.47id 06	1
▲▽	4	373656	(000000–)	Valve, Check	1
▲▲	5	373647	(000000–)	Seal Kit, Cartridge	1
▲▽	6	373661	(000000–)	Valve, Relief	1
▲▲	7	373647	(000000–)	Seal Kit, Cartridge	1
▲▽	8	373662	(000000–)	Stem, Valve, Hyd	1
▲▲	9	373648	(000000–)	Nut, Coil, Nyl Patch	1
▲▲	10	373647	(000000–)	Seal Kit, Cartridge	1
▲▽	11	373657	(000000–)	Stem, Valve, Hyd [4w2p]	1
▲▲	12	373648	(000000–)	Nut, Coil, F/#8	1
▲▲	13	373647	(000000–)	Seal Kit, Cartridge	1
▲	14	373640	(000000–)	Solenoid, #8, 12vdc	3
▲	15	373658	(000000–)	Spool, Pilot, Hyd	1
▲	16	373642	(000000–)	Solenoid, #10, 12vdc	1
▲▽	17	373663	(000000–)	Valve, Stem, No	1
▲▲	18	373670	(000000–)	Nut, Solenoid	1
▲▲	19	373646	(000000–)	Seal Kit, Cartridge	1
▲▽	20	9011347	(000000–)	Valve Assy [Proportional]	1
▲▲	21	9011343	(000000–)	Seal Kit, Valve [Ehpr98]	1
▲▲	22	9011345	(000000–)	Screw, Mtg [Ehpr98]	2
▲▲	23	9011346	(000000–)	Harness, Jumper [Deutsch To Mpack]	1
▲▽	24	13904	(000000–)	Fitting, Plug, Org, #6, Valve [Cec]	1
▲▲	25	77005	(000000–)	Seal, Org, .078 X 00.47id 06	1
▲▽	26	373683	(000000–)	Valve, Relief	1
▲▲	27	373647	(000000–)	Seal Kit, Cartridge	1

Fig. 7 – Hydraulic Valve Breakdown, 1072995

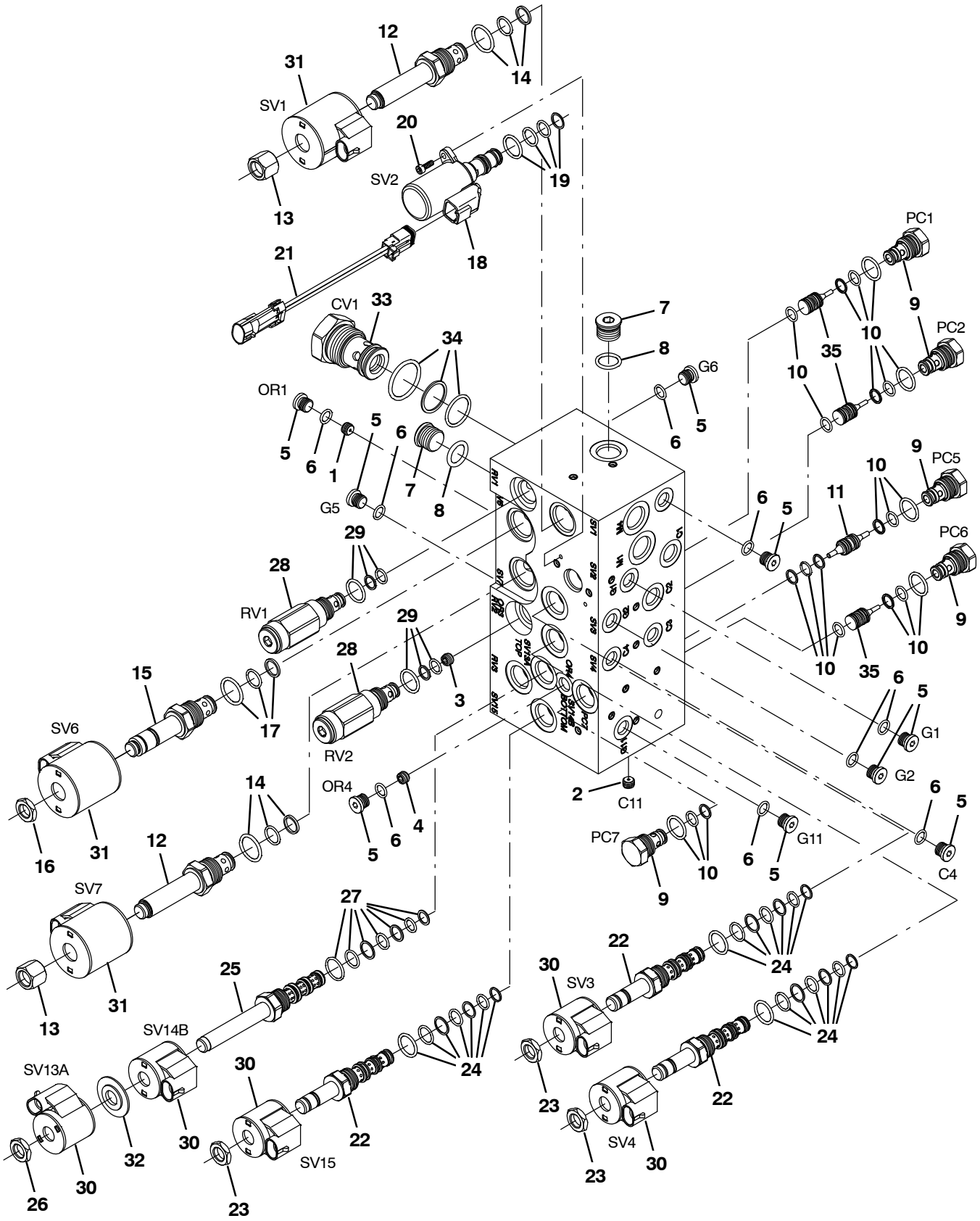

356401 – M20

Fig. 7 – Hydraulic Valve Breakdown, 1072995

	Ref.	Part No.	Serial Number	Description	Qty.
▽		1072995	(000000–)	Valve, Cntrl, Hyd, Solenoid, 12vdc 10gpm	1
▲	1	373665	(000000–)	Plug, Orifice, Valve, Hyd, .046	1
▲	2	373633	(000000–)	Plug, Orifice, Valve, Hyd, .040	1
▲	3	9004475	(000000–)	Plug Orifice, Valve, Hyd, .140	1
▲	4	373660	(000000–)	Plug, Orifice, Valve, Hyd, .030	1
▲▽	5	74098	(000000–)	Fitting, Hyd, Plug, Om04	9
▲▲	6	77003	(000000–)	Seal, Org, .072 X 00.35id #04	1
▲▽	7	13904	(000000–)	Fitting, Plug, Org, #6, Valve [Cec]	2
▲▲	8	77005	(000000–)	Seal, Org, .078 X 00.47id #06	1
▲▽	9	373656	(000000–)	Valve, Check	5
▲▲	10	373647	(000000–)	Seal Kit, Cartridge	1
▲	11	373688	(000000–)	Spool, Pilot, Dual, Hyd	1
▲▽	12	373663	(000000–)	Valve, Stem, No	2
▲▲	13	373670	(000000–)	Nut, Solenoid	1
▲▲	14	373671	(000000–)	Seal Kit, Cartridge	1
▲▽	15	373667	(000000–)	Stem, Valve, Hyd	1
▲▲	16	373648	(000000–)	Nut, Coil, F/#8	1
▲▲	17	373671	(000000–)	Seal Kit, Cartridge	1
▲▽	18	9011347	(000000–)	Valve Assy [Proportional]	1
▲▲	19	9011343	(000000–)	Seal Kit, Valve [Ehpr98]	1
▲▲	20	9011345	(000000–)	Screw, Mtg [Ehpr98]	2
▲▲	21	9011346	(000000–)	Harness, Jumper [Deutsch To Mpack]	1
▲▽	22	373657	(000000–)	Stem, Valve, Hyd [4w2p]	3
▲▲	23	373648	(000000–)	Nut, Coil, F/#8	1
▲▲	24	373647	(000000–)	Seal Kit, Cartridge	1
▲▽	25	373637	(000000–)	Valve, Cntrl, Solenoid	1
▲▲	26	373684	(000000–)	Nut, Coil, Nyl Patch	2
▲▲	27	373671	(000000–)	Seal Kit, Cartridge	1
▲▽	28	373666	(000000–)	Valve, Relief	2
▲▲	29	373647	(000000–)	Seal Kit, Cartridge	1
▲	30	373640	(000000–)	Solenoid, #8, 12vdc	5
▲	31	373642	(000000–)	Solenoid, #10, 12vdc	3
▲	32	373639	(000000–)	Spacer, Coil, #8	1
▲▽	33	373668	(000000–)	Valve, Check	1
▲▲	34	373671	(000000–)	Seal Kit, Cartridge	1
▲	35	373658	(000000–)	Spool, Pilot, Hyd	3

Fig. 8 – Hydraulic Steering Valve Breakdown, 1024260

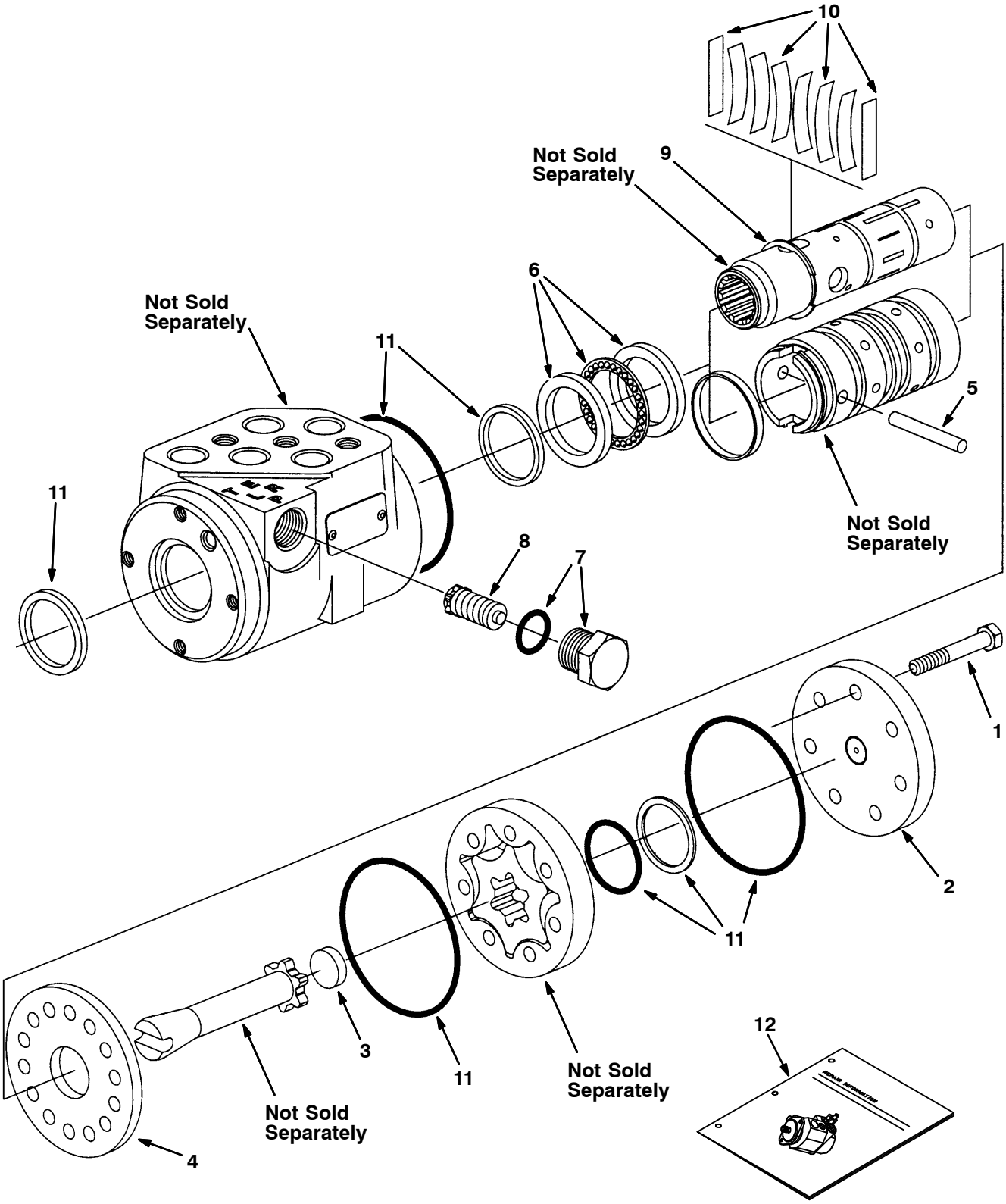

Fig. 8 – Hydraulic Steering Valve Breakdown, 1024260

	Ref.	Part No.	Serial Number	Description	Qty.
▽		1024260	(000000–)	Steer–Control, Hyd05, 06.1 2030	1
▲	1	74183	(000000–)	Screw, Valve, Steering	7
▲	2	74185	(000000–)	Cap, End, Valve, Steering	1
▲	3	74193	(000000–)	Spacer, Valve, Steering	1
▲	4	74222	(000000–)	Plate, Wear, Steering Valve	1
▲	5	74232	(000000–)	Pin, Valve, Steering	1
▲	6	21935	(000000–)	Bearing Kit [Cl]	1
▲	7	21933	(000000–)	Plug Assy [Cl]	1
▲	8	21934	(000000–)	Valve Assy, Relief [Cl]	1
▲	9	74243	(000000–)	Ring, Retainer, Steering Valve	1
▲	10	74196	(000000–)	Spring Kit, Scu [Cl]	1
▲	11	74244	(000000–)	Seal Kit, Steering [Cl]	1
▲	12	74245	(000000–)	Instr, Valve, Steering, Repair	1

Fig. 9 – Metering Solution Pump Breakdown, 73260

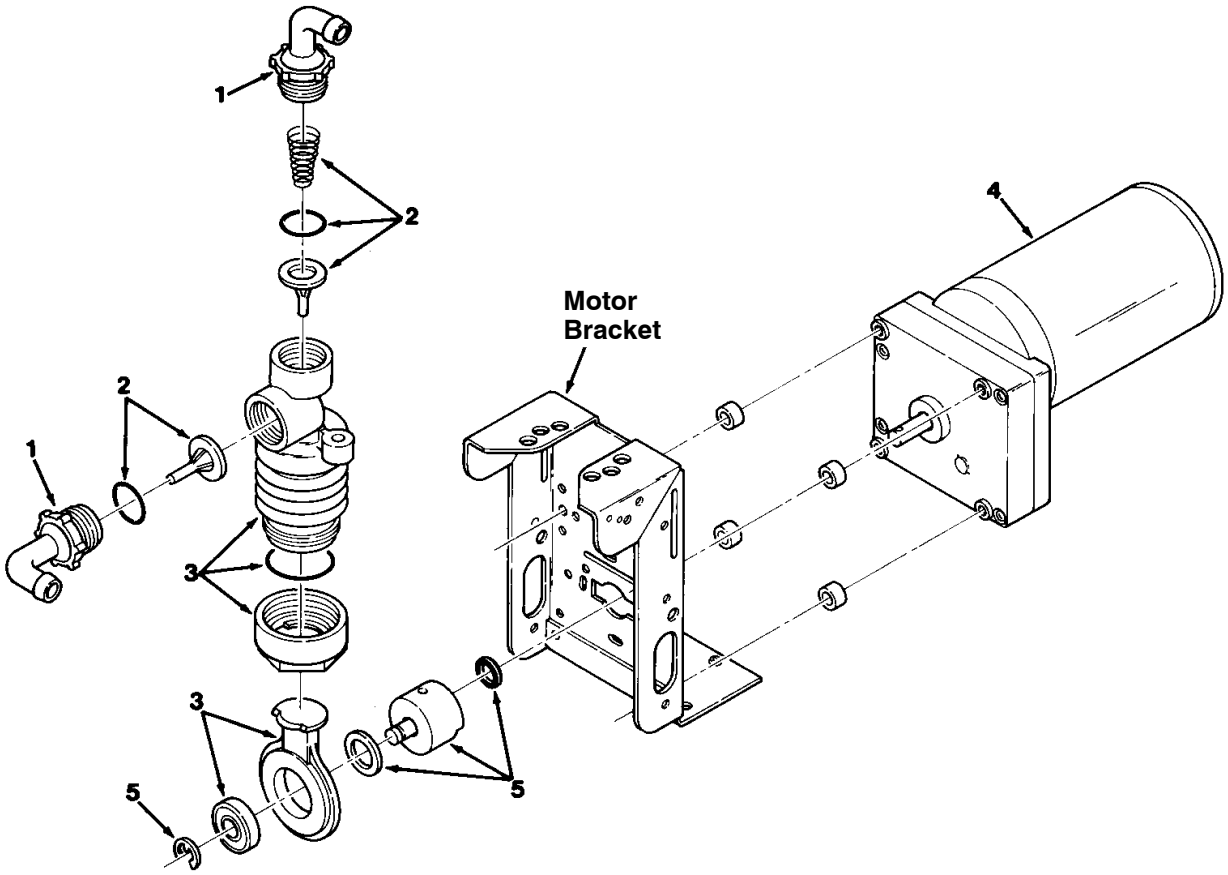

00112 – ALL

	Ref.	Part No.	Serial Number	Description	Qty.
▽		73260	(000000–)	Pump, Detgt, 14vdc, 150ml/Min 20psi	1
▲	1	63923	(000000–)	Tubing Connctr.Kit, Gorman Pmp	1
▲	2	21659	(000000–)	Valve Kit, Poppet, Gorman Rupp	1
▲	3	21657	(000000–)	Kit, Bellows, Pump, Detgt	1
▲	4	78875	(000000–)	Motor, Ele, Gear, 14vdc, Pump, Detgt	1
▲	5	02430	(000000–)	Crank Kit, Pump, F/79323, Replmt	1

Fig. 10 – Water Pump Breakdown, 1026743

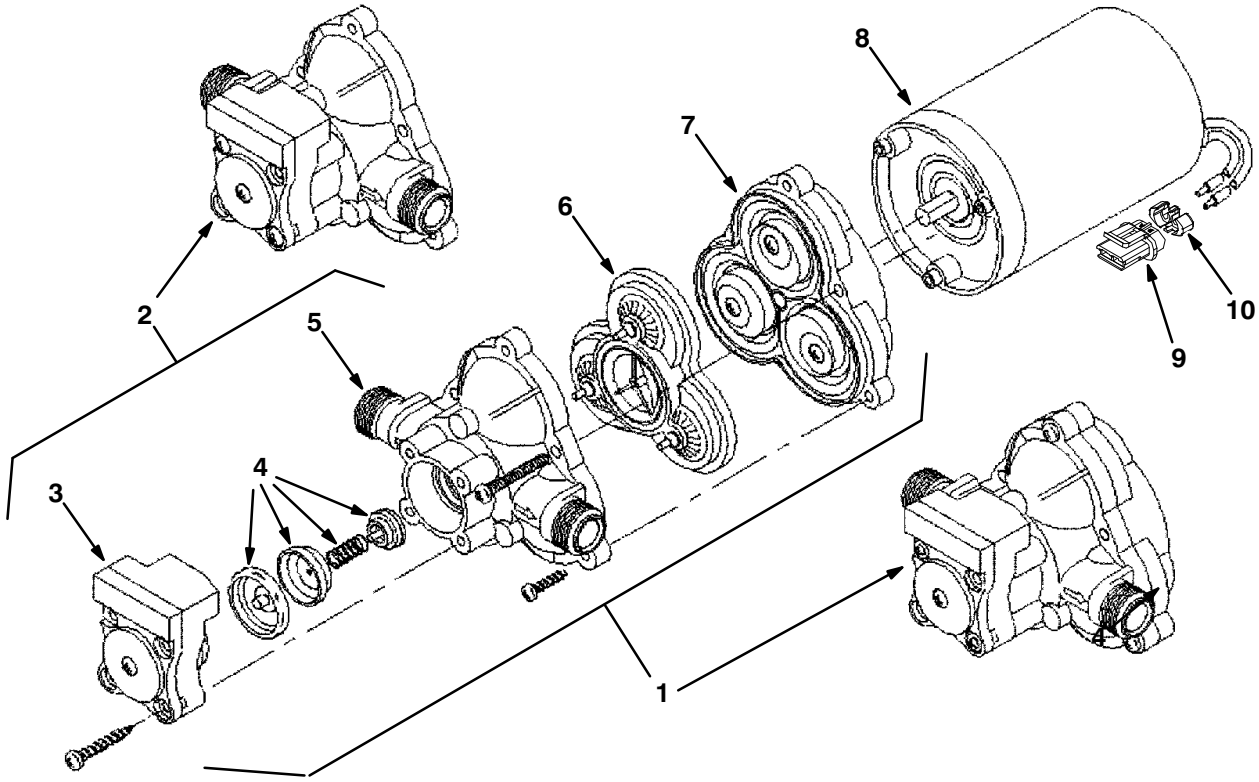

07490 – 09670

	Ref.	Part No.	Serial Number	Description	Qty.
▽		1026743	(000000–)	Pump, Diaphragm	1
▲	1	1031802	(000000–)	Complete Pump Kit, Pump, Repair,	1
▲	2	1031803	(000000–)	Hsg & Switch Kit, Pump, Repair,	1
▲	3	1031796	(000000–)	Switch Kit, Pump, Repair,	1
▲	4	1031797	(000000–)	Chech Valve Kit, Pump, Repair,	1
▲	5	1031798	(000000–)	Upper Hsg Kit, Pump, Repair,	1
▲	6	1031799	(000000–)	Bypass Valve Kit, Pump, Repair,	1
▲	7	1031800	(000000–)	Diaphragm Kit, Pump, Repair,	1
▲	8	1031801	(000000–)	Motor Kit, Pump, Repair,	1
▲	9	78950	(000000–)	Connector, Fem, 02cav, Mp280 Sealed	1
▲	10	78952	(000000–)	Lock, Secondary, 2cav, Mp280 Sealed	1
▲		78951	(000000–)	Terminal, Fem, Mp280, Sealed, 18–16ga	2
▲		10917	(000000–)	Seal, Wire, 14/16ga [Wp / Mp280 Sealed]	2

Fig. 11 – ec–H20 Module Assembly Breakdown, 9007882

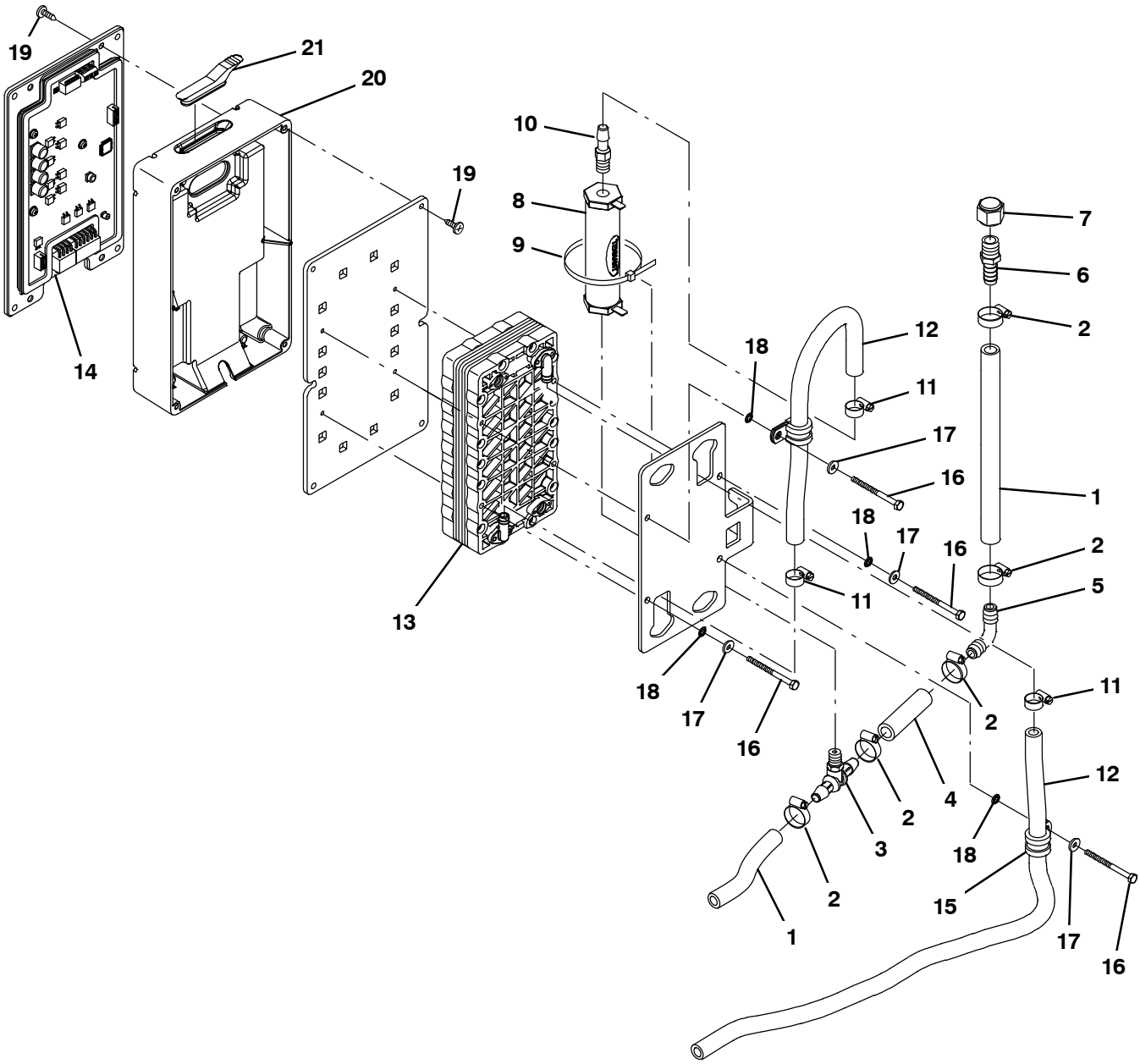

356035

Fig. 11 – ec–H20 Module Assembly Breakdown, 9007882

	Ref.	Part No.	Serial Number	Description	Qty.
▽		9007882	(000000–)	Module Kit, Replmt [Ec–H20]	1
▲	1	1014974	(000000–)	Hose, Afmkt, Pvc, Brd, 0.38id, 02ft, Clr	2
▲	2	54333	(000000–)	Clamp, Hose, Wormdrive, 0.31–0.88d, .31w	5
▲	3	1060517	(000000–)	Fitting, Plstc, Tee, Bm06/Pm02/Bm06	1
▲	4	1014971	(000000–)	Hose, Afmkt, Pvc, Brd, 0.38id, 01ft, Clr	1
▲	5	20951	(000000–)	Fitting, Plstc, E90, Bm06/Bm06	1
▲	6	150540	(000000–)	Fitting, Plstc, Str, Bm06/Pm04	1
▲	7	1005435	(000000–)	Fitting, Plstc, Pipe, Cap, Pf04	1
▲	8	1062006	(000000–)	Electrode, Cylindrical	1
▲	9	44961	(000000–)	Tie, Cable, Nyl, 14.5l .30w 4.0 Max D	1
▲	10	1060695	(000000–)	Fitting, Plstc, Str, Pm02/Bm05	1
▲	11	43844	(000000–)	Clamp, Hose, Wormdrive, 0.25–0.62d, .31w	3
▲	12	1052336	(000000–)	Hose, Afmkt, PVC, Brd, 0.31Id, 03Ft, Clr	1
▲	13	1233516	(000000–)	Electrode, 5 Plate [De Nora Tech]	1
▲	14	9007883	(000000–)	Controller Kit, Replmt [Ec–H20]	1
▲	15	1016354	(000000–)	Clamp, Cable, Ss, 0.50d X 0.50w [Insul]	2
▲	16	32509	(000000–)	Screw, Hex, M4 X 0.70 X 50, Ss	4
▲	17	41579	(000000–)	Washer, Flat, 08, Ss	4
▲	18	02938	(000000–)	Washer, Lock, Int, 08, Ss	4
▲	19	1018155	(000000–)	Screw, Pan, Phl, M5 X 0.80 X 16, Tcut,Ss	8
▲	20	1037032	(000000–)	Housing, Bottom	1
▲	21	1054776	(000000–)	Grommet, Blind	1

Fig. 12 – Seat Breakdown, 9018721

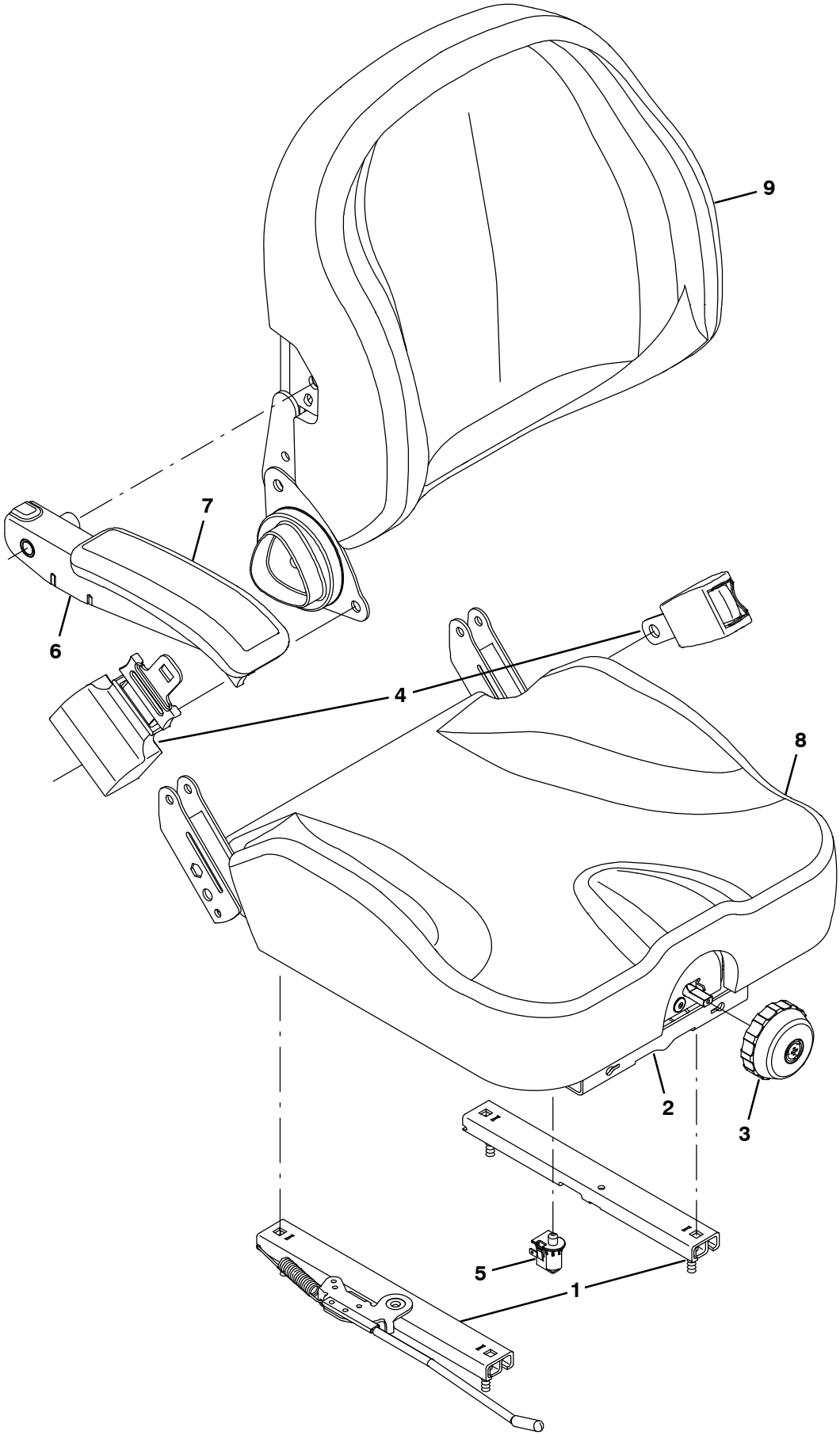

356526

Fig. 12 – Seat Breakdown, 9018721

	Ref.	Part No.	Serial Number	Description	Qty.
▽		9018721	(000000–)	Seat, Deluxe, Replmt [M20/T20/M30]	1
▲	1	9012585	(000000–)	Track Assy, Slide	1
▲	2	9012587	(000000–)	Bellows, Seat	1
▲	3	9012589	(000000–)	Knobs, Adjmt, Weight	1
▲	4	9018734	(000000–)	Seatbelt, Retract, Orange, Replmt	1
▲	5	9012591	(000000–)	Switch, Seat	1
▲	6	9012592	(000000–)	Armrest	1
▲	7	9012593	(000000–)	Pad, Armrest	1
▲	8	9012594	(000000–)	Cover, Cushion	1
▲	9	9012595	(000000–)	Cover, Backrest	1

Fig. 13 – Steering Gearbox Breakdown, 9015636

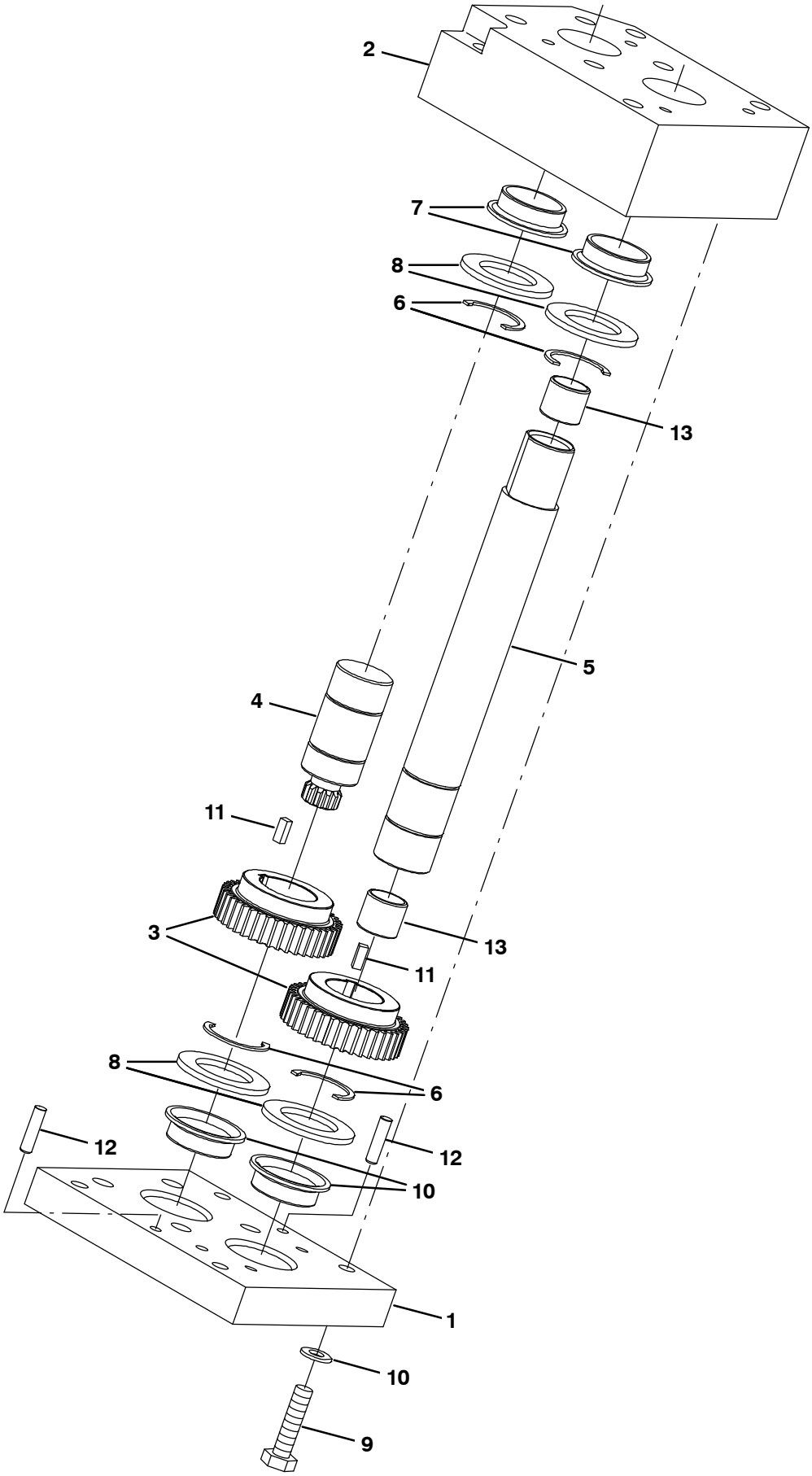

356677

Fig. 13 – Steering Gearbox Breakdown, 9015636

	Ref.	Part No.	Serial Number	Description	Qty.
▽		9015636	(000000–)	Gearbox Kit, Steering, Afmkt[M20/30/T20]	1
▲	1	1224091	(000000–)	Housing, Gear, Top	1
▲	2	1224092	(000000–)	Housing, Gear, Bottom	1
▲	3	1222953	(000000–)	Gear, Steering	2
▲	4	1224093	(000000–)	Shaft, Gear, Orbital	1
▲	5	1224094	(000000–)	Shaft. Sterring	1
▲	6	59861	(000000–)	Ring, Retaining, Ext, 1.25d	4
▲	7	1210624	(000000–)	Bushing, Flng, 1.25b 1.41d 0.50l	4
▲	8	763024	(000000–)	Washer, Thrust, 1.26b 1.97d 0.13, Bnz	4
▲	9	41342	(000000–)	Screw, Hex, M8 X 1.25 X 40, 8.8	4
▲	10	39349	(000000–)	Washer, Flat, 0.31, Sae	4
▲	11	00961	(000000–)	Key, Sq, 0.19 X 0.19, 0.50l	2
▲	12	83043	(000000–)	Pin, Dowel, 0.2502d X 1.00l	2
▲	13	1057785	(000000–)	Bearing, Journal, 0.75b 0.88d 0.75l	2

Fig. 14 – FaST Injector Assembly Breakdown, 9008868

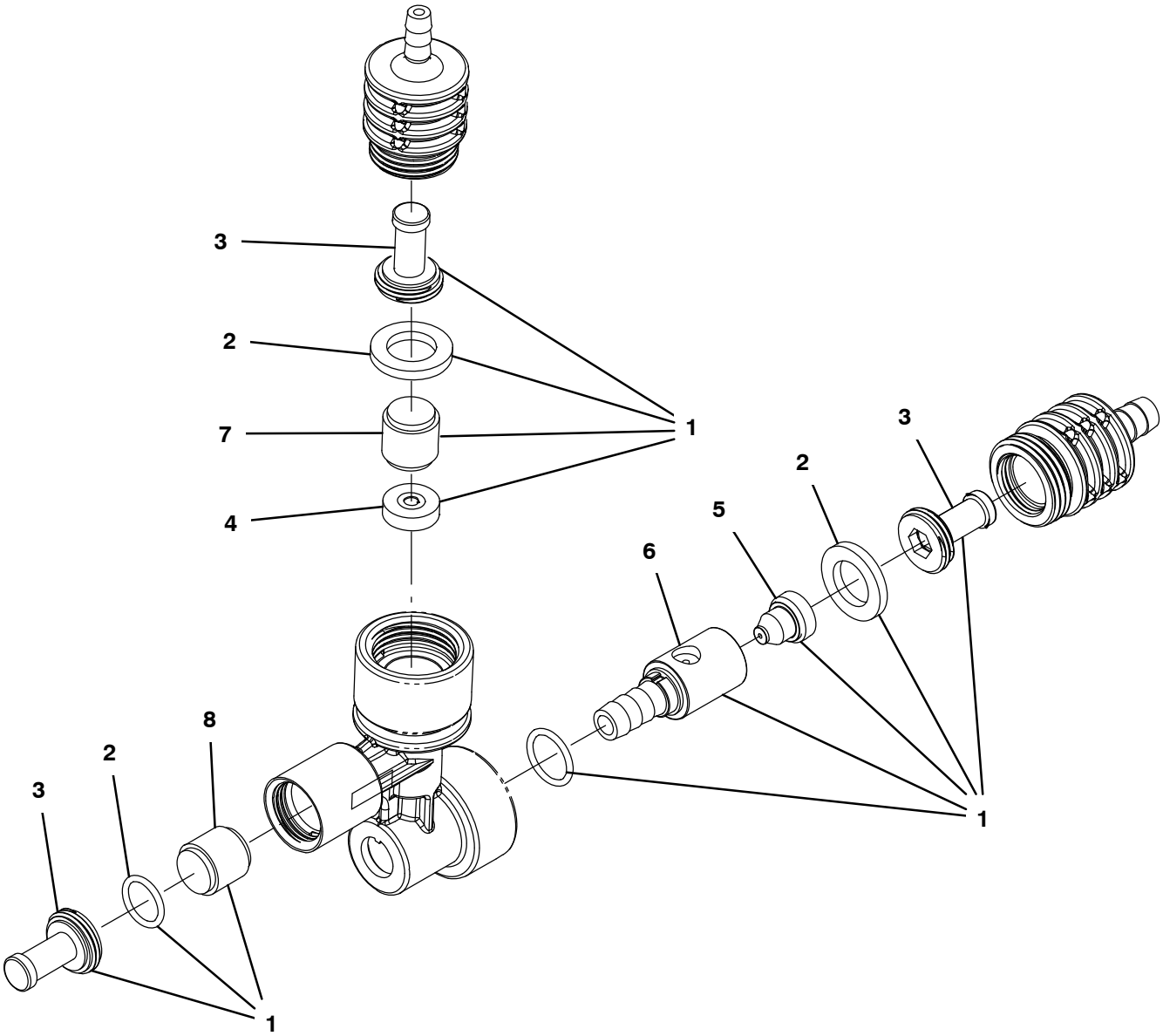

356271

	Ref.	Part No.	Serial Number	Description	Qty.
▽		9008868	(000000–)	FaST Kit, Injector [M20/T20/m30 FaST III}	1
▲▽	1	9008757	(000000–)	FaST Kit, Ci [inj Rebld, M30/M20 III]	1
▲▲	2	9008848	(000000–)	FaST Kit, Seal, injector, Ci [FaST III]	1
▲▲	3	9003009	(000000–)	FaST Kit, Ci, Injector Filters[FaST Ii+]	1
▲▲	4	1059878	(000000–)	Plate Assy, Orifice, 0.0105Id, Green	1
▲▲	5	1042710	(000000–)	Plug, Orifice, 0.060, Ss [FaST Ii+]	1
▲▲	6	1059234	(000000–)	Insert, :Lrg [Venturi, FaST III]	1
▲▲	7	1030444	(000000–)	Valve, Check, 0002psi [FaST Ii+]	1
▲▲	8	1030441	(000000–)	Valve, Check, 0005psi [FaST Ii+]	1

Fig. 15 – Water Pump Motor Breakdown, 1225829

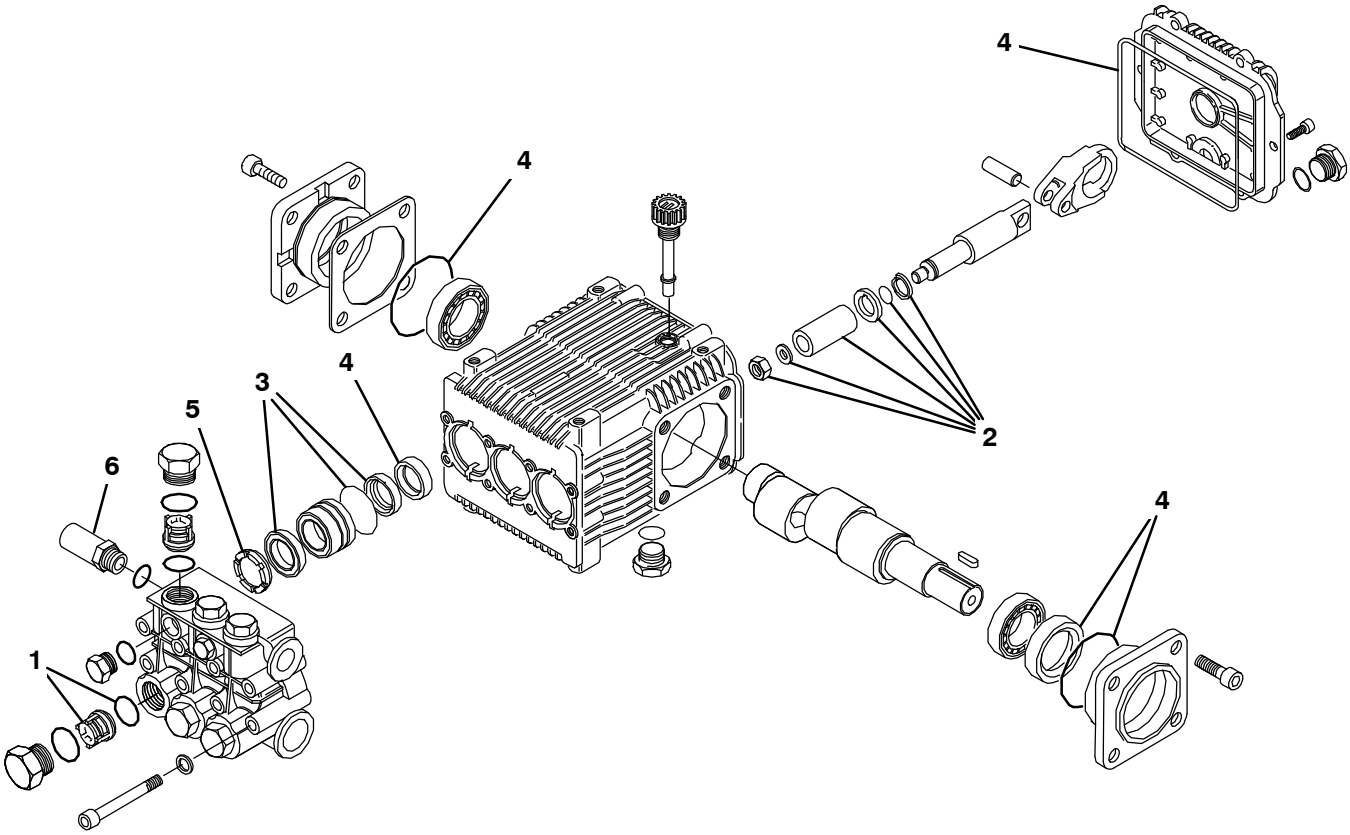

354649

	Ref.	Part No.	Serial Number	Description	Qty.
▽		1225829	(000000–)	Pump, Hyd, Press Washer	1
▲	1	9004290	(000000–)	Valve Kit	1
▲	2	9004291	(000000–)	Piston Kit	1
▲	3	9004288	(000000–)	Seal Kit [Buna]	1
▲	3	9004272	(000000–)	Seal Kit [Vitron]	1
▲	4	9004289	(000000–)	Seal Kit, Oil	1
▲	5	9004292	(000000–)	Ring Kit, Sppt	1
▲	6	1227137	(000000–)	Valve, Hyd, Press Washer	1

SECTION 5

Contents **Page**

Fig. 1 – Cylinder Block Group 5-2
Fig. 2 – Rocker Cover Group 5-4
Fig. 3 – Cylinder Head Group 5-5
Fig. 4 – Front Cover and Oil Pan Group 5-6
Fig. 5 – Camshaft and Valve Group 5-8
Fig. 6 – Piston and Crankshaft Group 5-10
Fig. 7 – Balancer Group 5-11
Fig. 8 – Oil Pump and Pressure Switch Group 5-12
Fig. 9 – Water Pump Group 5-13
Fig. 10 – Intake Manifold Gasket Group . . . 5-14
Fig. 11 – Exhaust Manifold Gasket Group . . 5-16
Fig. 12 – Fan Tensioner and Pump Mount Group 5-17
Fig. 13 – Flywheel Group 5-18
Fig. 14 – Ignition Coil and Spark Plug Group 5-19
Fig. 15 – Starter / Alternator Group 5-20
Fig. 16 – Remote Oil Filter Group 5-21
Fig. 17 – Coolant Group 5-22
Fig. 18 – DSR Coolant Group, LPG Engine 5-23
Fig. 19 – Electrical Group 5-24
Fig. 20 – Fuel Rail Group, Gasoline Engine 5-26
Fig. 21 – Throttle Body Group, Gasoline Engine 5-27
Fig. 22 – Throttle Body Group, LPG Engine 5-28
Fig. 23 – Vaporizer Group, LPG Engine . . . 5-29
Fig. 24 – Electronic Pressure Regulator (EPR) Group, LPG Engine 5-30

Fig. 1 – Cylinder Block Group

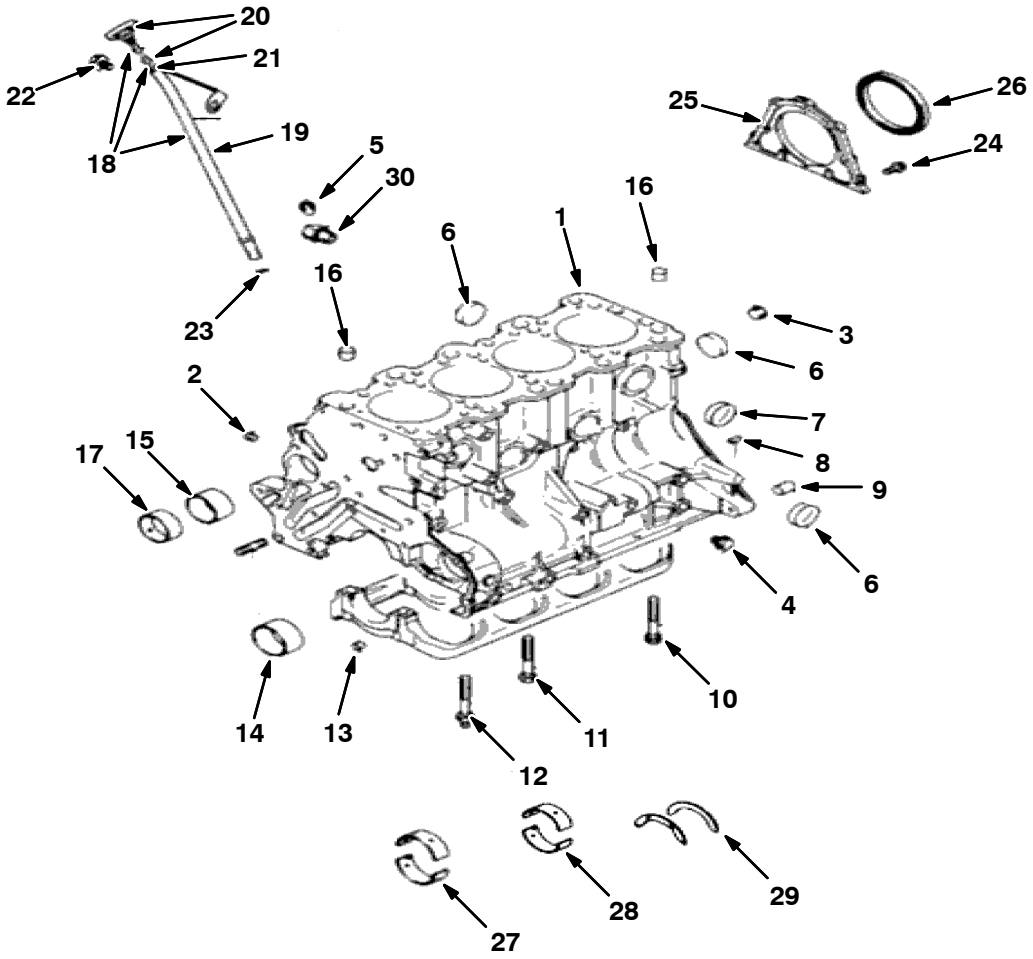

Fig. 1 – Cylinder Block Group

	Ref.	Part No.	Description	Qty.
▽	1	9010419	Block Assy, Cylinder	1
▲	2	9010420	Plug, Taper	2
▲	3	9010421	Plug, Taper	1
▲	4	9010422	Plug	1
▲	5	9010423	Plug, Taper	1
▲	6	9010424	Cap, Seal	7
▲	7	9010425	Cap, Seal	2
▲	8	9010426	Pin, Dowel	2
▲	9	9010427	Bushing, Knock	2
▲	10	9010428	Bolt, Cap, Bearing	2
▲	11	9010429	Bolt, Cap, Bearing	7
▲	12	9010430	Bolt, Cap, Bearing	1
▲	13	9010431	Bushing	2
▲	14	9010432	Bearing, Std, Balancer	1
▲	14	9010433	Bearing, Oversize [1.0]	1
▲	15	9010434	Bearing, Std, Balancer	1
▲	15	9010435	Bearing, Oversize [1.0]	1
▲	16	9010436	Bushing, Knock	2
▲	17	9010458	Bearing, Shaft, Std, Balancer	1
▲	17	9010459	Bearing, Shaft, Balancer [Ovrsz]	1
▽	18	9010439	Dipstick Assy, Guage	1
▲	19	9010440	Dipstick, Guage, Guide	1
▲▽	20	9015866	Dipstick, Oil	1
▲▲	21	9010438	O–Ring	1
	22	9010441	Bolt, Flange	1
	23	9010442	O–Ring	1
	24	9010444	Bolt, Flange	5
	25	9010445	Seal, Case, Oil, Rear	1
	26	9010446	Seal, Oil	1
	27	9010447	Bearing, Cshft [Green Std 1,2,4,5]	4
	27	9010448	Bearing, Cshft [Yellow Std 1,2,4,5]	4
	27	9010449	Bearing, Cshft[No Color Std 1,2,4,5]	4
	27	9010450	Bearing, Cshft [Lan Std 1,2,4,5]	4
	27	9010451	Bearing, Cshft [Red Std 1,2,4,5]	4
	28	9010452	Bearing, Cshft [Green Std 3]	1
	28	9010453	Bearing, Cshft [Yellow Std 3]	1
	28	9010454	Bearing, Cshft [No Color Std 3]	1
	28	9010455	Bearing, Cshft [Lan Std 3]	1
	28	9010456	Bearing, Cshft [Black Std 3]	1
	29	9010457	Bearing, Thrust, Cshft	1
	30	9010443	Drain, Water, Joint	1

Fig. 2 – Rocker Cover Group

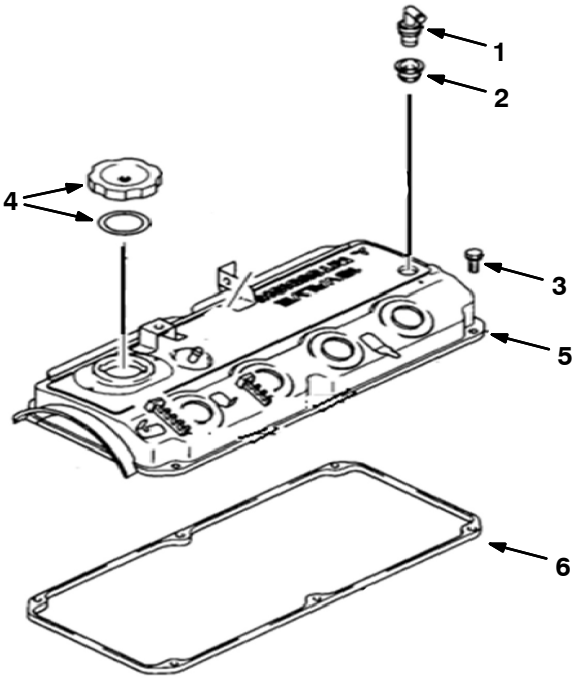

Ref.	Part No.	Description	Qty.
1	9010460	Valve, Pcv	1
2	9010461	Valve, Gasket, Pcv	1
3	9010462	Bolt, Rocker, Cover	6
4	9010464	Cap, Oil, Filler	1
5	9010466	Cover Assy, Rocker	1
6	9010465	Gasket, Cover, Rocker	1

Fig. 3 – Cylinder Head Group

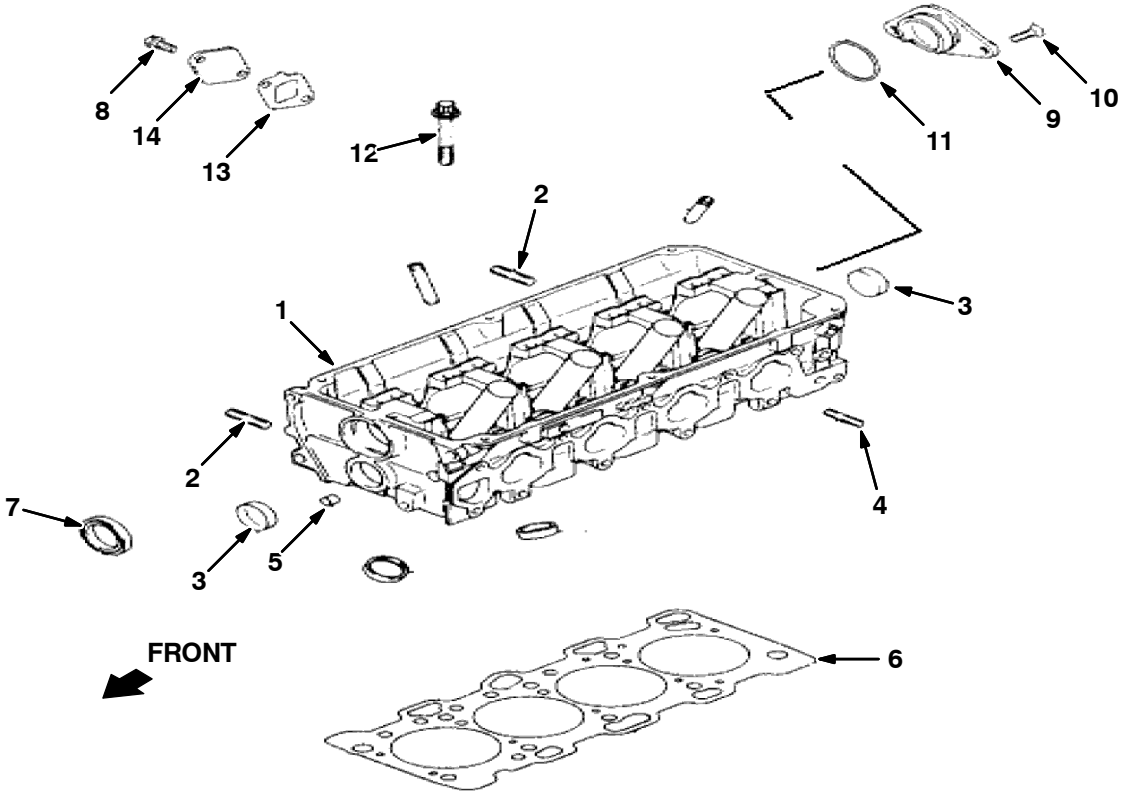

	Ref.	Part No.	Description	Qty.
▽	1	9014162	Head Kit, Cyl [Mitsubishi 2015 12mm]	1
▲▽		9014161	Head Assy, Cylinder[Mits 2015 12mm]	1
▲▲	2	9010473	Stud	2
▲▲	3	9010469	Seal, Cap	2
▲▲	4	9010470	Stud	3
▲▲	5	9010431	Bushing	2
▲	6	9010468	Gasket, Cylinder, Head	1
▲		9010465	Gasket, Cover, Rocker	1
▲		9014160	Plug, Spark [Mitsubishi 2015 12mm]	4
	7	9010471	Seal, Cam Shaft, Front	1
	8	9010441	Bolt, Flange	2
	9	9010480	Thurst, Case	1
	10	9010481	Screw	2
	11	9010482	O–Ring	1
	12	9010484	Cylinder Assy, Head, Bolt	10
	13	9010483	Gasket	1
	14	9010485	Cover	1

Fig. 4 – Front Cover and Oil Pan Group

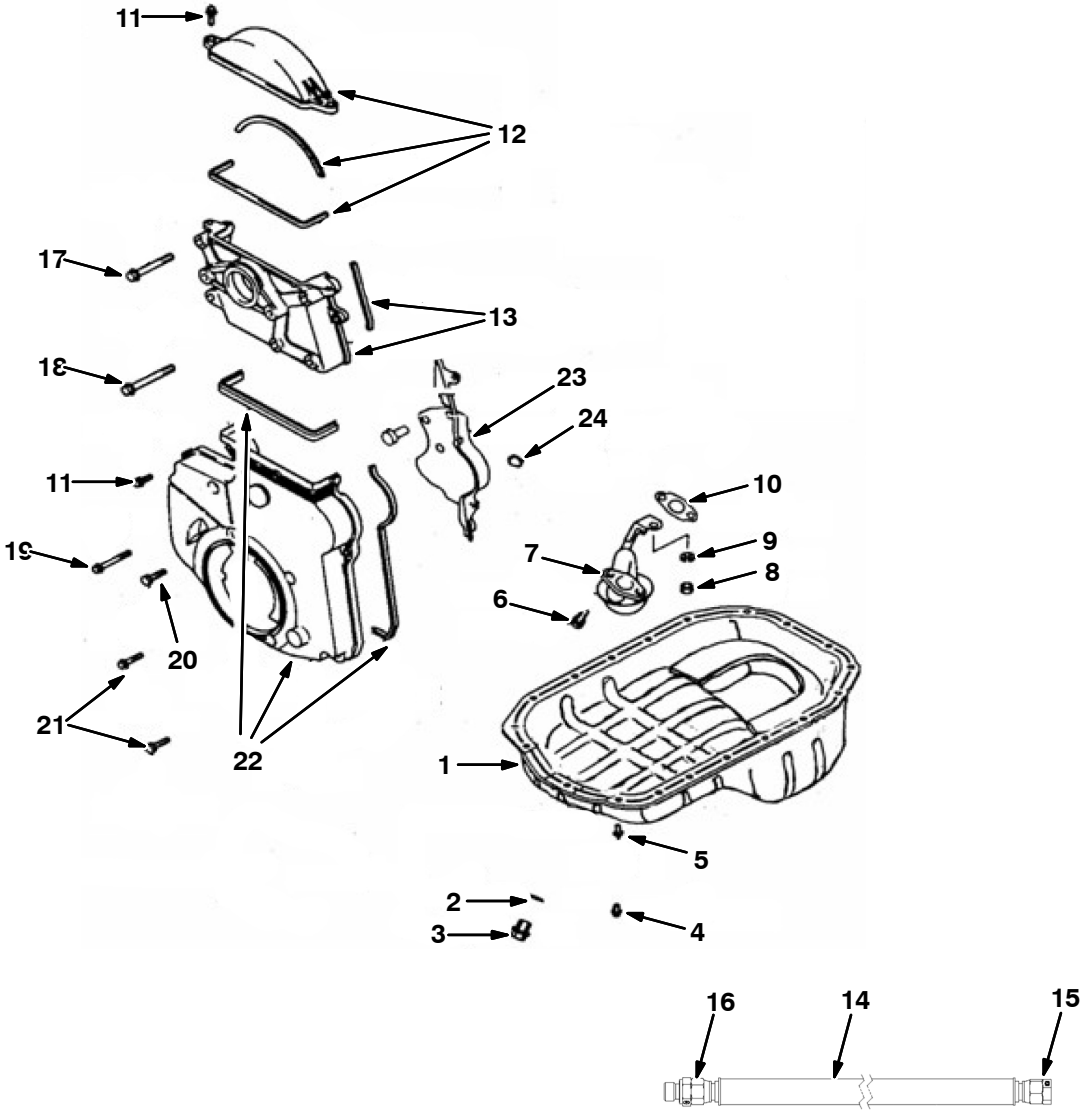

Fig. 4 – Front Cover and Oil Pan Group

	Ref.	Part No.	Description	Qty.
▽	1	9010487	Pan, Oil	1
▲	2	9010488	Gasket, Plug, Drain, Oil	1
▲	3	9010489	Plug, Oil, Drain	1
	4	9010490	Bolt, Flange	17
	5	9010491	Bolt, Flange	2
	6	9010492	Washer, Bolt	2
	7	9010493	Screen, Oil	1
	8	9010494	Nut, Strainer	1
	9	9010495	Washer, Strainer	1
	10	9010496	Gasket, Screen	1
	11	9010497	Bolt, Flange	8
	12	9010498	Cover Assy, Front, Upper [T–Belt]	1
	13	9010502	Bracket Assy, Coil, Ignition	1
	14	9010311	Hose, Drain, Oil [Mit 20/24m]	1
	15	9010312	Plug, Flare, 37deg [Mit]	1
	16	9010313	Fitting, 37deg [Mit]	1
	17	9010503	Bolt, Flange	3
	18	9010504	Bolt, Flange	1
	19	9010505	Bolt, Flange	1
	20	9010506	Bolt	2
	21	9010507	Bolt	2
	22	9010508	Cover, Lower, Front [T–Belt]	1
	23	9010511	Cover, Rear [T–Belt]	1
	24	9010512	Plug, Rubber	1

Fig. 5 – Camshaft and Valve Group

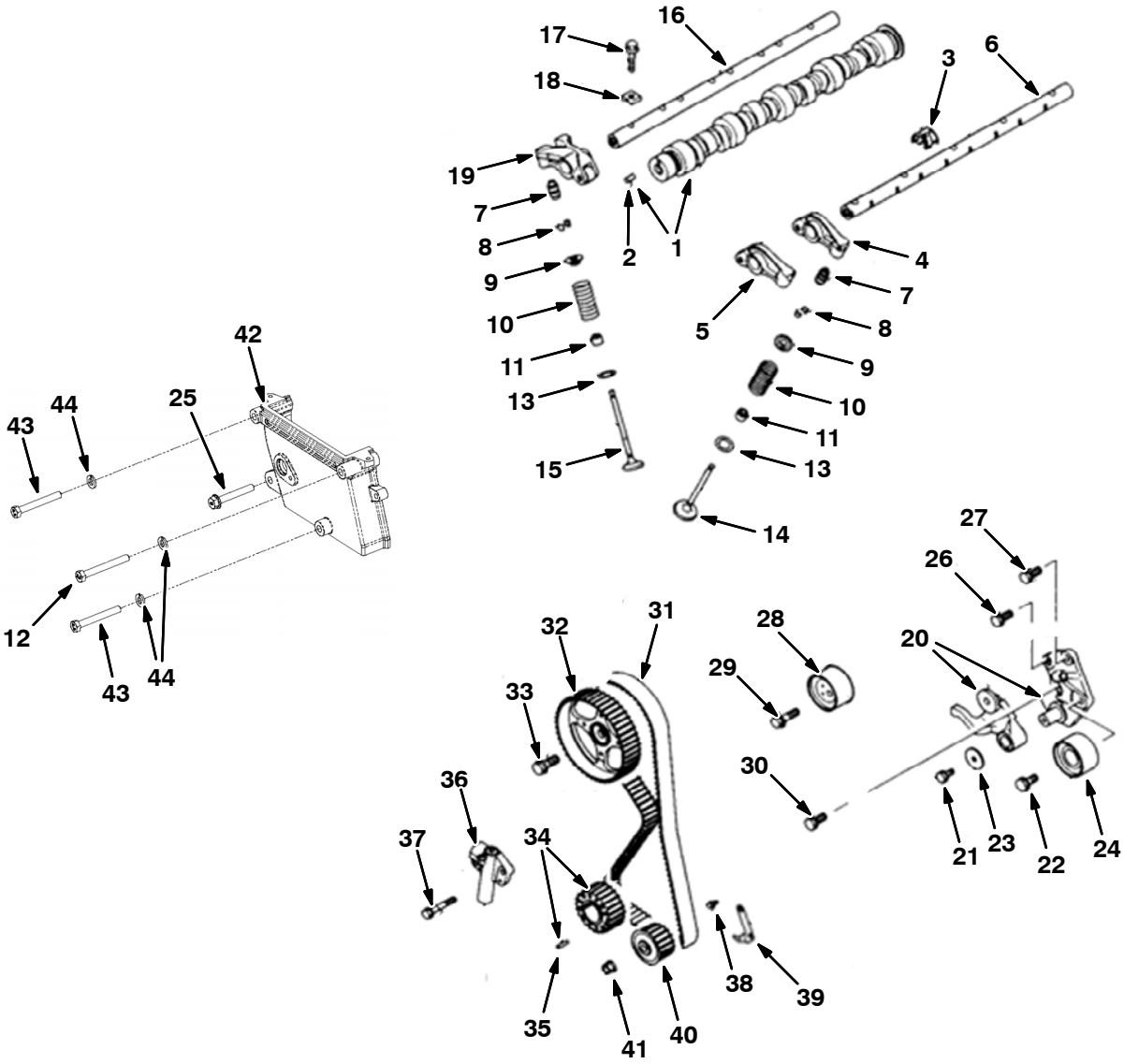

Fig. 5 – Camshaft and Valve Group

	Ref.	Part No.	Description	Qty.
▽	1	9010530	Camshaft Assy	1
▲	2	9010535	Pin, Dowel	1
	3	9010532	Shaft, Spring, Rocker	4
	4	9010533	Arm Assy, Rocker [B]	4
	5	9010534	Arm Assy, Rocker [A]	4
	6	9010531	Shaft, Arm , Rocker	1
	7	9010536	Adjuster Assy, Lash	16
	8	9010537	Valve, Spring, Lock	32
	9	9010538	Valve, Spring, Retainer	16
	10	9010539	Valve, Spring	16
	11	9010540	Valve, Seal, Stem	16
	12	9010253	Bolt, M8–1.25 X 70 Hxhd [Mit]	1
	13	9010541	Valve, Spring, Seat	16
	14	9010542	Valve, Inlet	8
	15	9010543	Valve, Exhaust	8
	16	9010544	Shaft, Arm, Rocker	1
	17	9010545	Bolt, Flange	13
	18	9010546	Shaft, Cap, Rocker	13
	19	9010547	Arm Assy, Rocker [C]	4
▽	20	9010548	Bracket, Pulley, Tensioner	1
▲	21	9010549	Bolt, Washer	1
▲	22	9010550	Bolt, Washer	1
▲	23	9010551	Washer	1
▲	24	9010552	Pulley, Idler	1
	25	9010254	Bolt, M8–1.25 X 55 Fi Hd [Mit]	1
	26	9010554	Bolt, Seal	1
	27	9010555	Bolt, Washer	1
	28	9010556	Pulley, Tensioner	1
	29	9010557	Bolt, Washer	1
	30	9010550	Bolt, Washer	1
	31	9010559	Belt, Timing	1
	32	9010560	Sprocket, Camshaft	1
	33	9010561	Bolt, Flange	1
▽	34	9010562	Sprocket Assy, Cshft	1
▲	35	9010563	Pin, Spring	1
	36	9010564	Tensioner	1
	37	9010565	Bolt, Flange	2
	38	9010491	Bolt, Flange	2
	39	9010567	Bracket, Indicator, Timing	1
	40	9010568	Sprocket, Pump, Oil	1
	41	9010569	Nut	1
	42	9010250	Cover, Timing, Gear [Mit 2.0/2.4l]	1
	43	9010251	Bolt, M8–1.25 X 65 Hxhd [Mit]	2
	44	9010252	Washer, Lock, M8 [Mit]	3

Fig. 6 – Piston and Crankshaft Group

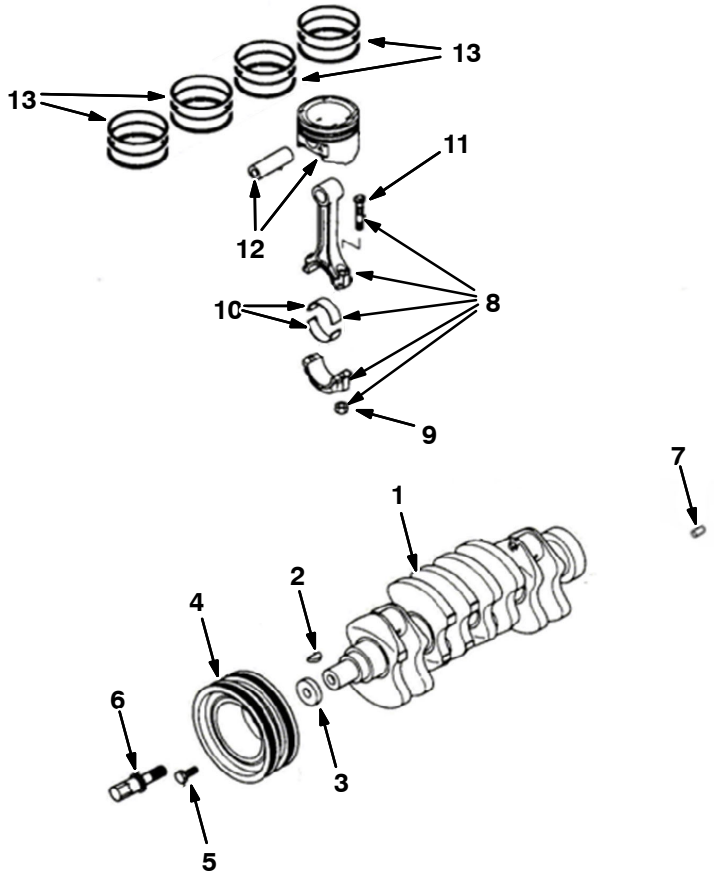

	Ref.	Part No.	Description	Qty.
	1	9010513	Crankshaft Assy	1
	2	9010514	Key	1
	3	9010515	Washer, Special	1
	4	9010516	Pulley Assy, Damper, Torsional	1
	5	9010517	Bolt, Washer	4
	6	9010518	Bolt, Sprocket, Cshft	1
	7	9010519	Pin, Dowel	1
▽	8	9010520	Rod Assy, Connecting	4
▲	9	9010521	Nut	8
▲	10	9010522	Bearing, Rod, Connect [Yellow Std]	4
▲	10	9010523	Bearing, Rod, Connect [No Color Std]	4
▲	10	9010524	Bearing, Rod, Connect [Lan Std]	4
▲	11	9010525	Bolt, Connecting	8
	12	9010526	Piston, Pin [Std A]	4
	12	9010527	Piston, Pin [Std B]	4
	12	9010528	Piston, Pin [Std C]	4
	13	9010529	Piston Set, Ring	1

Fig. 7 – Balancer Group

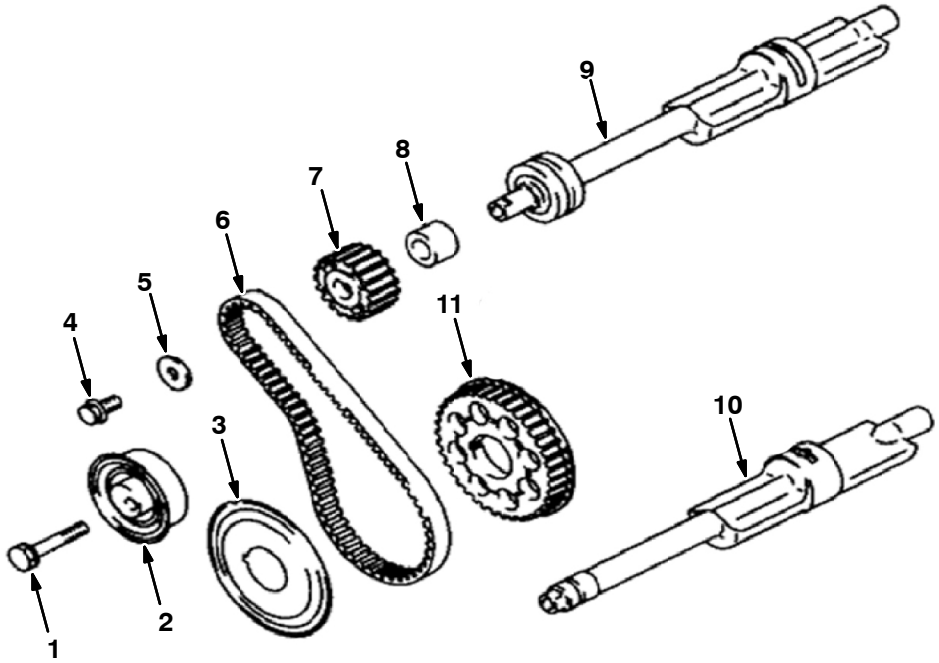

Ref.	Part No.	Description	Qty.
1	9010570	Bolt, Belt, Balancer, Train	1
2	9010571	Tensioner, Timing, Belt	1
3	9010572	Flange, Sprocket, Cshft	1
4	9010600	Bolt, Flange	1
5	9010574	Washer, Belt, Balancer, Train	1
6	9010575	Belt, Timing	1
7	9010576	Sprocket, Shaft, Balancer	1
8	9010577	Spacer, Belt, Balancer, Train	1
9	9010578	Shaft, Right, Balancer	1
10	9010579	Shaft, Left, Balancer	1
11	9010580	Sprocket, Cshft	1

Fig. 8 – Oil Pump and Pressure Switch Group

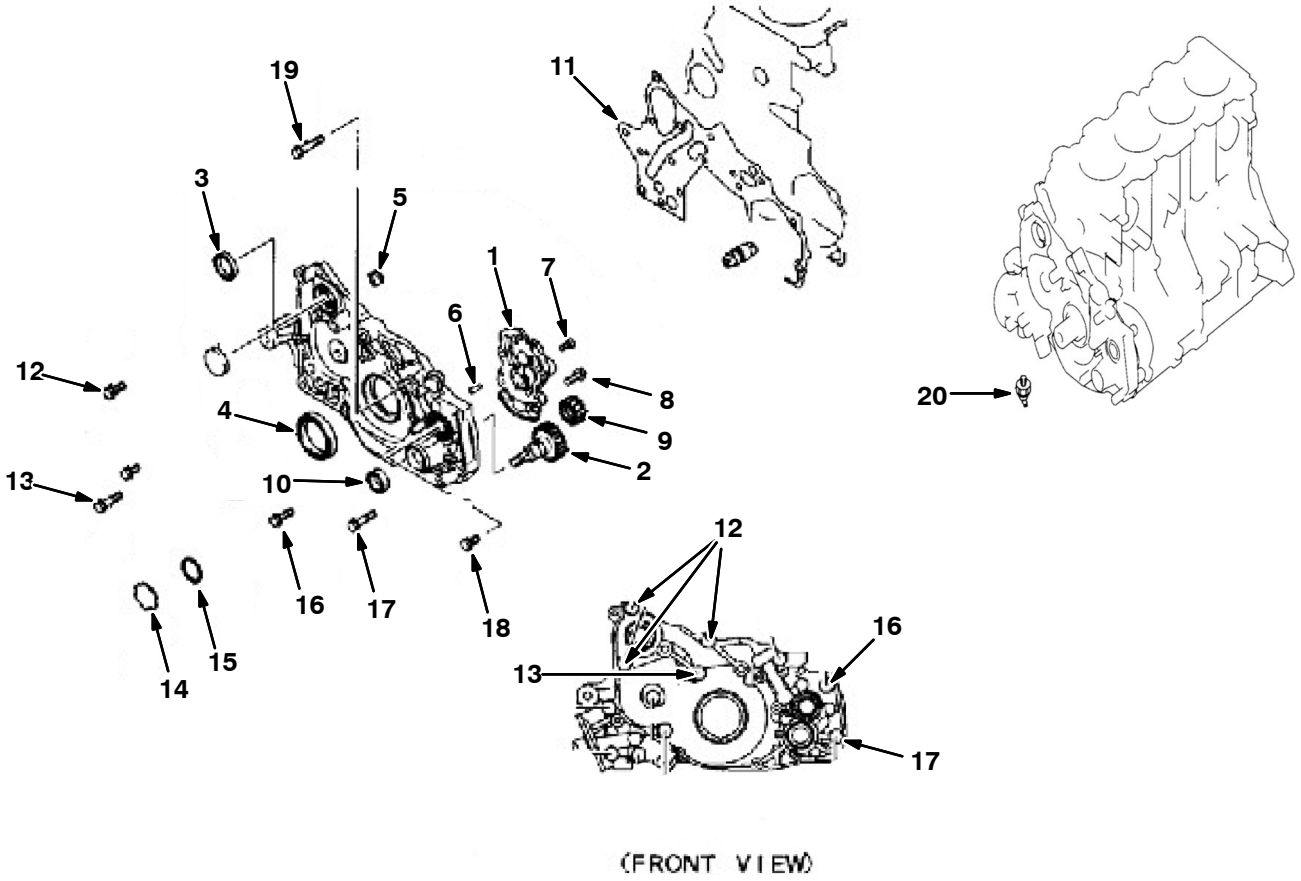

	Ref.	Part No.	Description	Qty.
▽	1	9010582	Pump, Oil	1
▲	2	9010592	Pump, Gear, Drive, Oil	1
▲	3	9010585	Seal, Oil	1
▲	4	9010586	Seal, Oil	1
▲	5	9010587	Plug, Tapper	1
▲	6	9010426	Pin, Dowel	2
▲	7	9010589	Screw	1
▲	8	9010590	Bolt, Flange	4
▲	9	9010591	Pump, Gear, Oil	1
▲	10	9010601	Seal, Oil	1
	11	9010593	Gasket, Case, Front	1
	12	9010594	Bolt, Washer	3
	13	9010595	Bolt, Washer	1
	14	9010596	Plug, Cap	1
	15	9010597	O–Ring	1
	16	9010598	Bolt, Flange	1
	17	9010599	Bolt, Flange	1
	18	9010600	Bolt, Flange	1
	19	9010583	Bolt, Flange	1
	20	9010259	Sender, Oil, Press [Mit] (3 Prong)	1

Fig. 9 – Water Pump Group

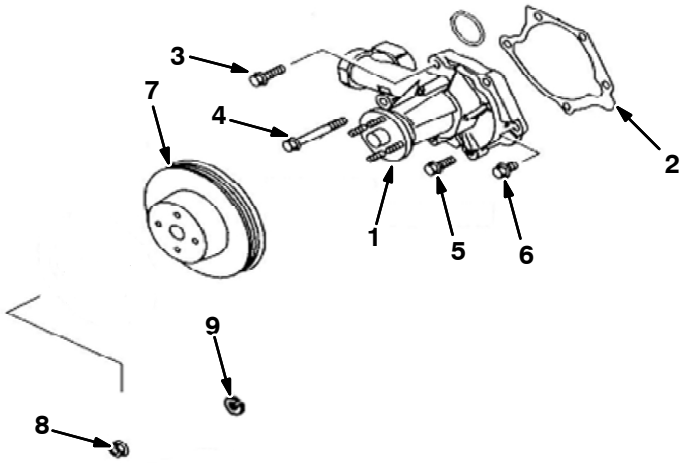

Ref.	Part No.	Description	Qty.
1	9010602	Pump, Water	1
2	9010603	Gasket, Pump, Water	1
3	9010604	Bolt, Flange	1
4	9010503	Bolt, Flange	1
5	9010606	Bolt, Flange	2
6	9010607	Bolt, Flange	1
7	9010612	Pulley, Pump, Water	1
8	9010609	Nut, Flange	4
9	9010610	Washer, Spring	4

Fig. 10 – Intake Manifold Gasket Group

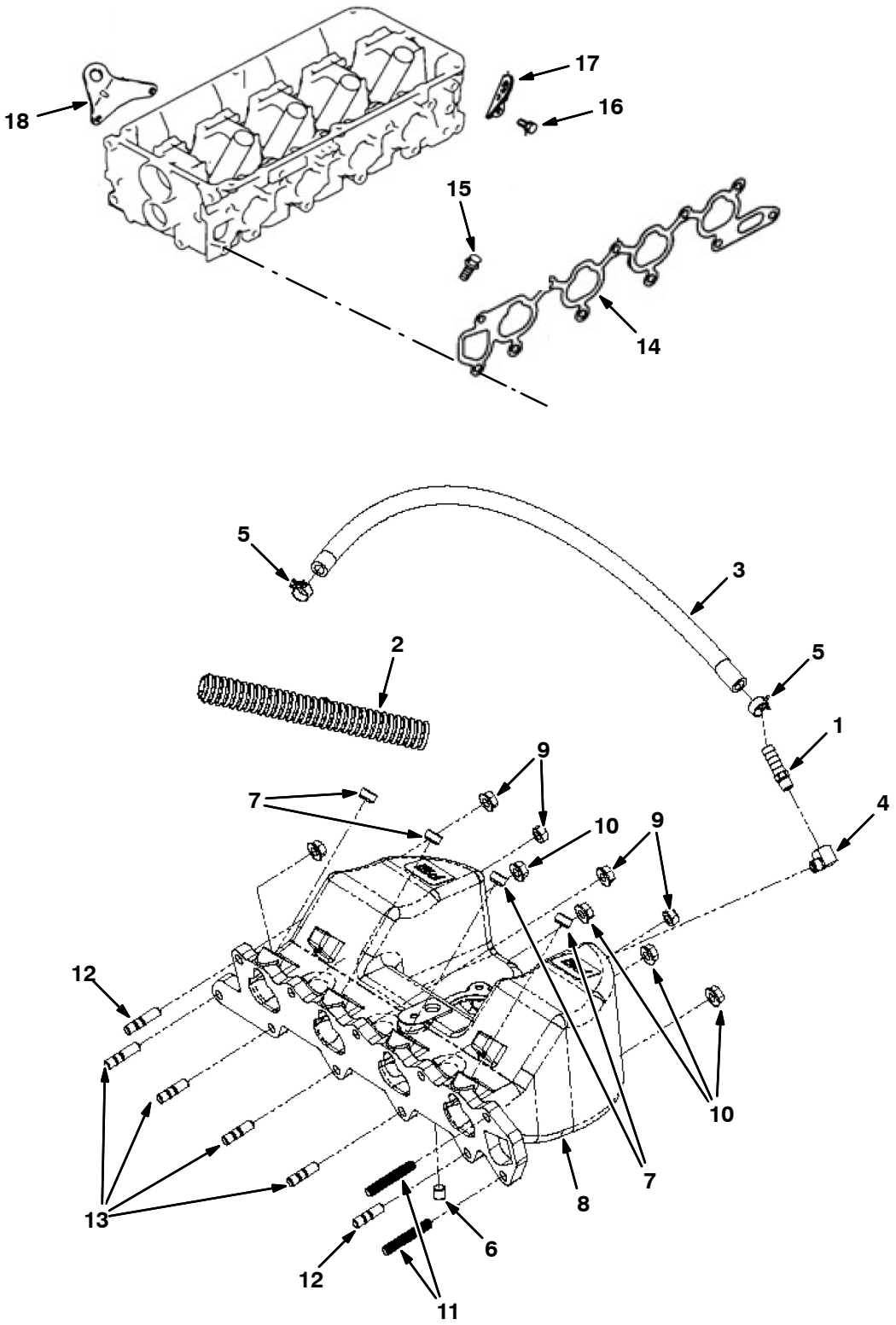

Fig. 10 – Intake Manifold Gasket Group

Ref.	Part No.	Description	Qty.
1	9010382	Fitting, 1/8 Mpt X 3/8 Hb [Mit]	1
2	9010281	Loom, Convoluted, Split 5/8 [Mit]	17”
3	385001	Hose, Fuel, .38d, Rbr[16”L]	20”
4	9010383	Elbow, 1/8m X 1/8f, 90 [Mit]	1
5	9010282	Clamp, 3/8id [Mit Olive Green]	2
6	9010283	Plug, 1/8 Npt, Brs, Skt Hd [Mit]	1
7	9010284	Plug, Injector [Mit]	4
8	9010285	Manifold, Intake [Mit 20/24m Tilt]	1
9	9010286	Nut, M8–1.25 [Mit]	2
10	385015	Nut, Flng, M8	7
11	9010287	Stud, M8–1.25 X 50 Full Thrd [Mit]	2
12	9010288	Stud, M8–1.25 X 35 [Mit Double End]	2
13	9010384	Stud, M8–1.25 X 30 [Mit Double End]	4
14	9010613	Gasket, Manifold, Intake	1
15	9010606	Bolt, Flange	2
16	9010615	Bolt, Manifold, Inlet	1
17	9010617	Hanger, Engine	1
18	9010618	Hanger, Engine	1

Fig. 11 – Exhaust Manifold Gasket Group

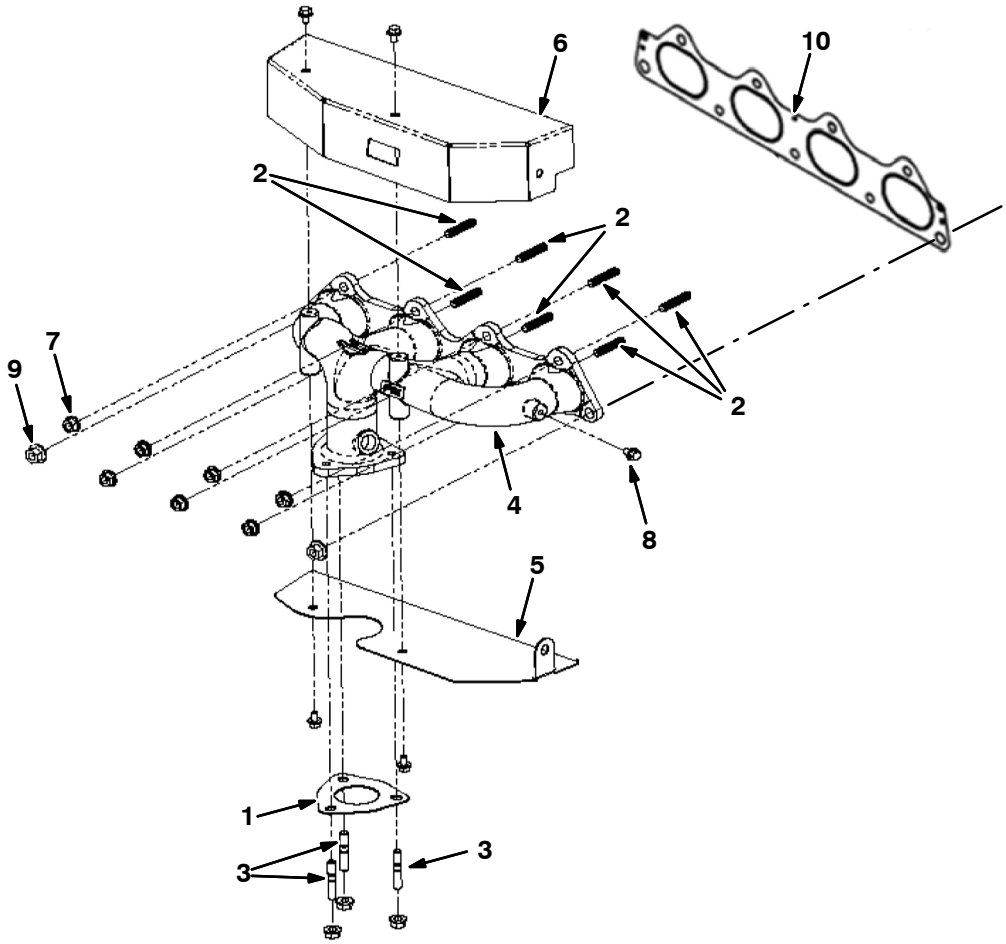

Ref.	Part No.	Description	Qty.
1	9010296	Gasket, Manifold, Exh [Mit]	1
2	9010297	Stud, M8–1.25 X 40 [Mit]	7
3	372020	Stud, Manifold, Intake, M8 X 28	3
4	9010298	Manifold, Exhaust [Mit 2.0/2.4l]	1
5	9010302	Shield, Heat, Lower [Mit 20/24m]	1
6	9010303	Shield, Heat, Upper [Mit 20/24m]	1
7	9015915	Nut [2.4l Mit]	10
8	9010262	Bolt, M6–1.0 X 10 Fl Hd [Mit]	5
9	9015916	Nut [2.4l Mit]	2
10	9010619	Gasket, Manifold, Exhaust	1

Fig. 12 – Fan Tensioner and Pump Mount Group

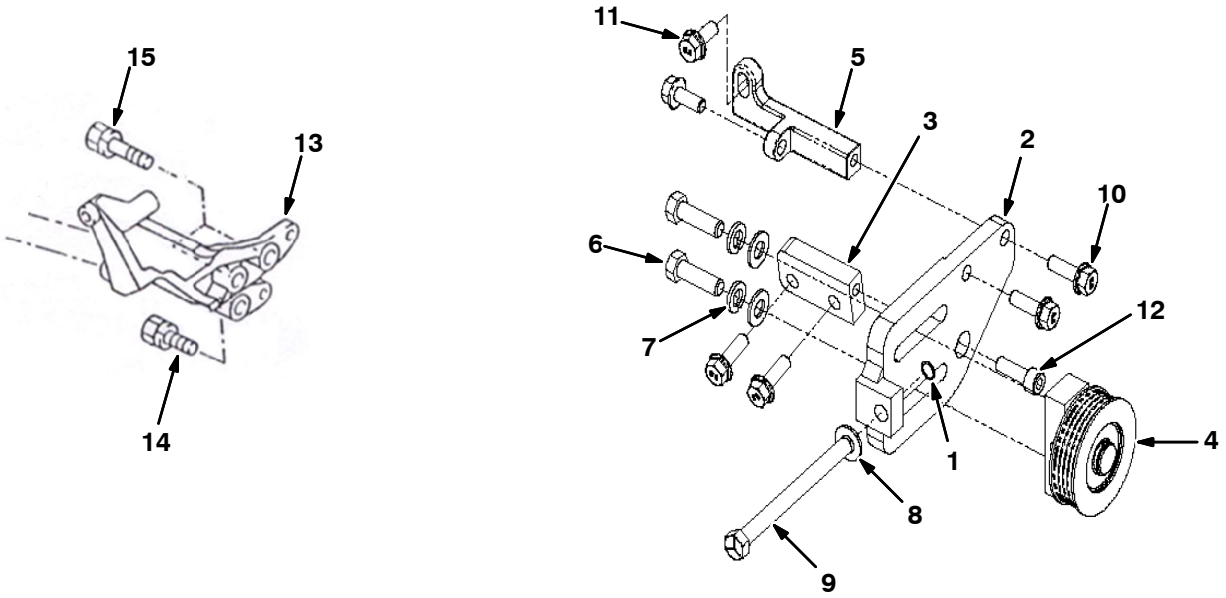

Ref.	Part No.	Description	Qty.
1	371562	Ring, Retaining	1
2	9010222	Plate, Tensioner, Adj [Mit 2.0/2.4l]	1
3	9010223	Bar, Tensioner, Mtg [Mit 2.0/2.4l]	1
4	9010224	Pulley, Tensioner, Assy[Mit2.0/2.4l]	1
5	9010225	Bracket, Tensioner, [Mit 2.0/2.4l]	1
6	9010226	Bolt, 3/8–16 X 1 1/4 Hxhd [Mit]	2
7	371509	Washer, Lock, 0.38	2
8	9010227	Washer, Flat 3/8, Sae	3
9	9010228	Bolt, 3/8–16 X 4.5 [Mit]	1
10	9010229	Bolt, M8–1.25 X 25 [Mit]	4
11	9010230	Bolt, M8–1.25 X 20 Fl Hd [Mit]	2
12	9010231	Bolt, M8–1.25 X 25 Soc Hd [Mit]	1
13	9010623	Bracket, Pump, Mtg	1
14	9010624	Bolt, Washer	1
15	9010625	Bolt, Washer	2

Fig. 13 – Flywheel Group

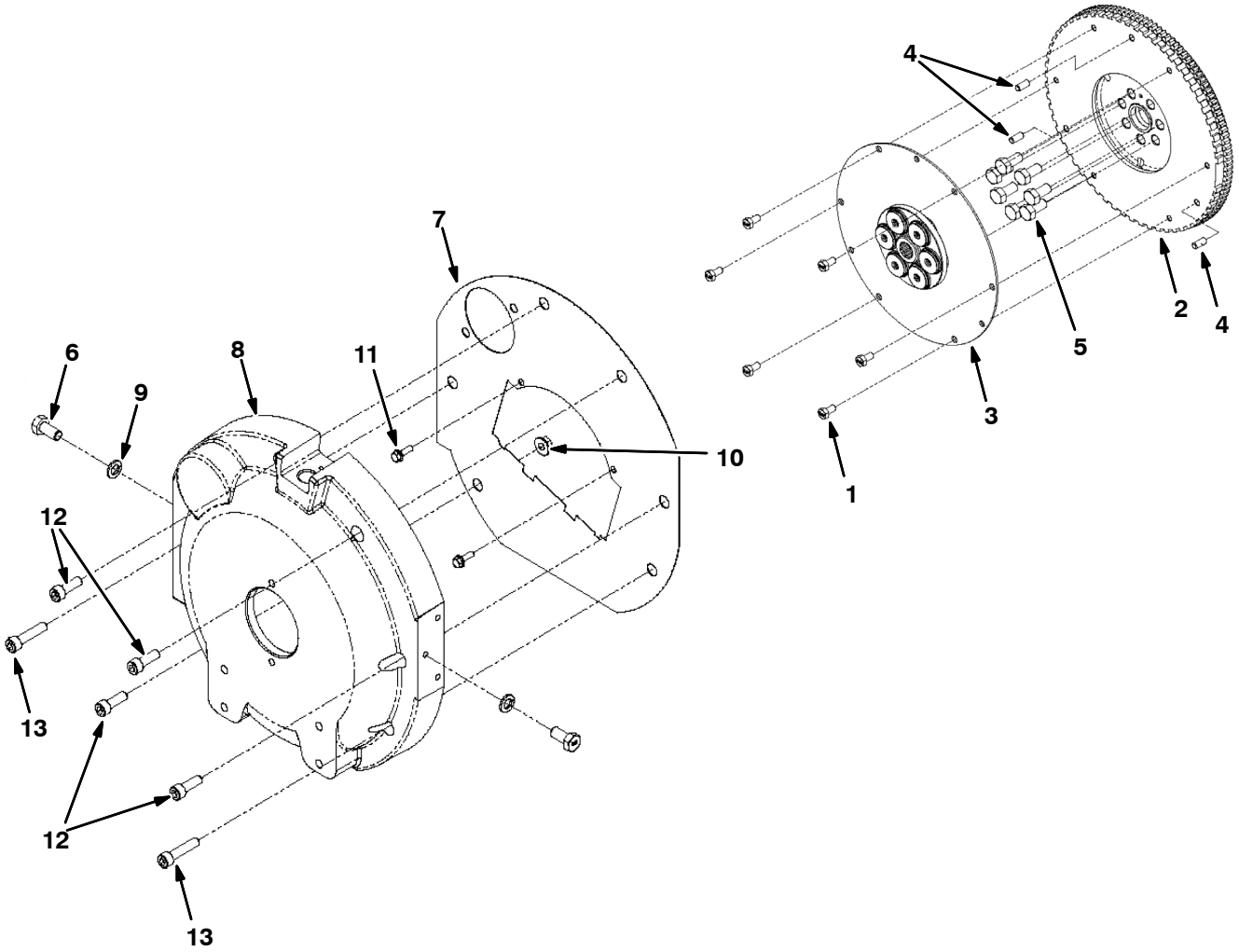

Ref.	Part No.	Description	Qty.
1	9010232	Bolt, M8–1.25 X 15, Hx Hd [Mit]	6
2	9010233	Flywheel, Flatface [Mit 20/24m]	1
3	9010234	Coupling, Flywheel [Mit20/24m]	1
4	9010235	Pin, Flywheel [Mit 20/20m]	3
5	9010236	Bolt, Flywheel [Mit 20/24m]	7
6	9010359	Bolt, M12–1.75 X 25, Hex Hd [Mit]	2
7	9010237	Cover, Dust [Mit 2.0l]	1
8	9010238	Housing, Flywheel [Mit 2.0l]	1
9	9010360	Washer, Lock, M12 [Mit]	2
10	9010239	Nut, M10–1.25 Flg [Mit]	1
11	9010240	Bolt, M6–1.0 X 20 Fl Hd [Mit]	2
12	9010241	Bolt, M10–1.25 X 30 Soc Hd [Mit]	4
13	9010242	Bolt, M10–1.25 X 45 Soc Hd [Mit]	2

Fig. 14 – Ignition Coil and Spark Plug Group

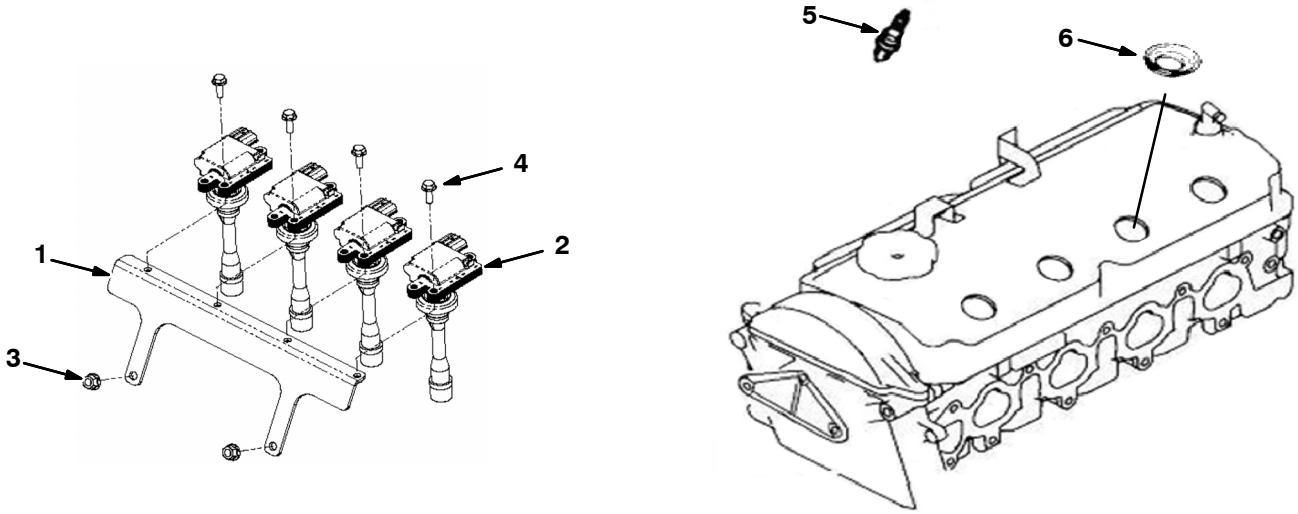

Ref.	Part No.	Description	Qty.
1	9010243	Bracket, Coil [Mit 2.0/2.4l]	1
2	9010244	Coil, Ignition [Mit 2.0/2.4l]	4
3	385015	Nut, Flng, M8	2
4	9010240	Bolt, M6–1.0 X 20 Fl Hd [Mit]	4
5	9014160	Plug, Spark [Mitsubishi 2015 12mm]	4
6	9010479	Seal, Oil	4

Fig. 15 – Starter / Alternator Group

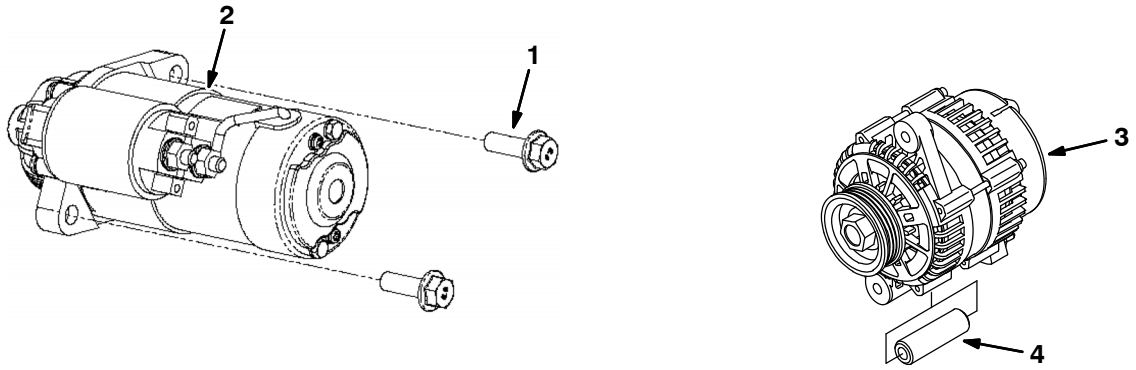

Ref.	Part No.	Description	Qty.
1	9010245	Bolt, M10–1.50 X 30 [Mit]	2
2	9010246	Starter, Motor [Mit 2.0/2.4l]	1
3	9010217	Alternator, 7si [Mit Df Sur–Belt]	1
4	9010219	Spacer, Alternator [Mit 2.0/2.4l]	1

Fig. 16 – Remote Oil Filter Group

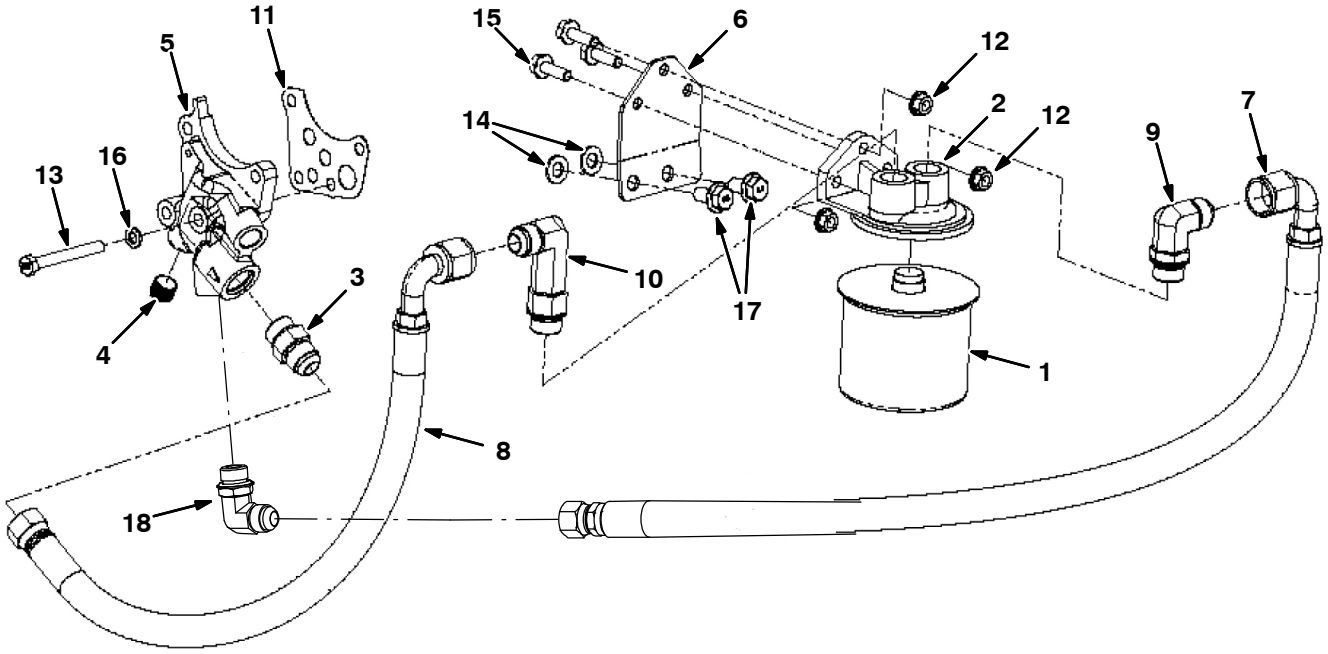

Ref.	Part No.	Description	Qty.
1	393982	Element, Fltr, Oil, Spin–On (Mits)	1
2	371503	Mount, Fltr, Remote	1
3	9010371	Fitting, Str, 10–10 Orb, 37fi [Mit]	1
4	9010372	Plug, 3/8npt X 5/16, Brs [Mit]	1
5	9010373	Adapter, Filter, Oil, Remote [Mit]	1
6	9010374	Bracket, Filter, Oil, Remote [Mit]	1
7	9010376	Hose, 90xstr,Flter, Oil, Remote[Mit]	1
8	9010376	Hose, 90xstr,Flter, Oil, Remote[Mit]	1
9	9010628	Elbow	1
10	9010629	Elbow	1
11	9010377	Gasket, Oil, Adapter [Mit 2.0/2.4]	1
12	385015	Nut, Flng, M8	3
13	9010253	Bolt, M8–1.25 X 70 Hxhd [Mit]	1
14	9010630	Washer	2
15	9010229	Bolt, M8–1.25 X 25 [Mit]	3
16	9010380	Washer, Lock, M8 [Mit]	1
17	9010631	Bolt	2
18	9010628	Elbow	1

Fig. 17 – Coolant Group

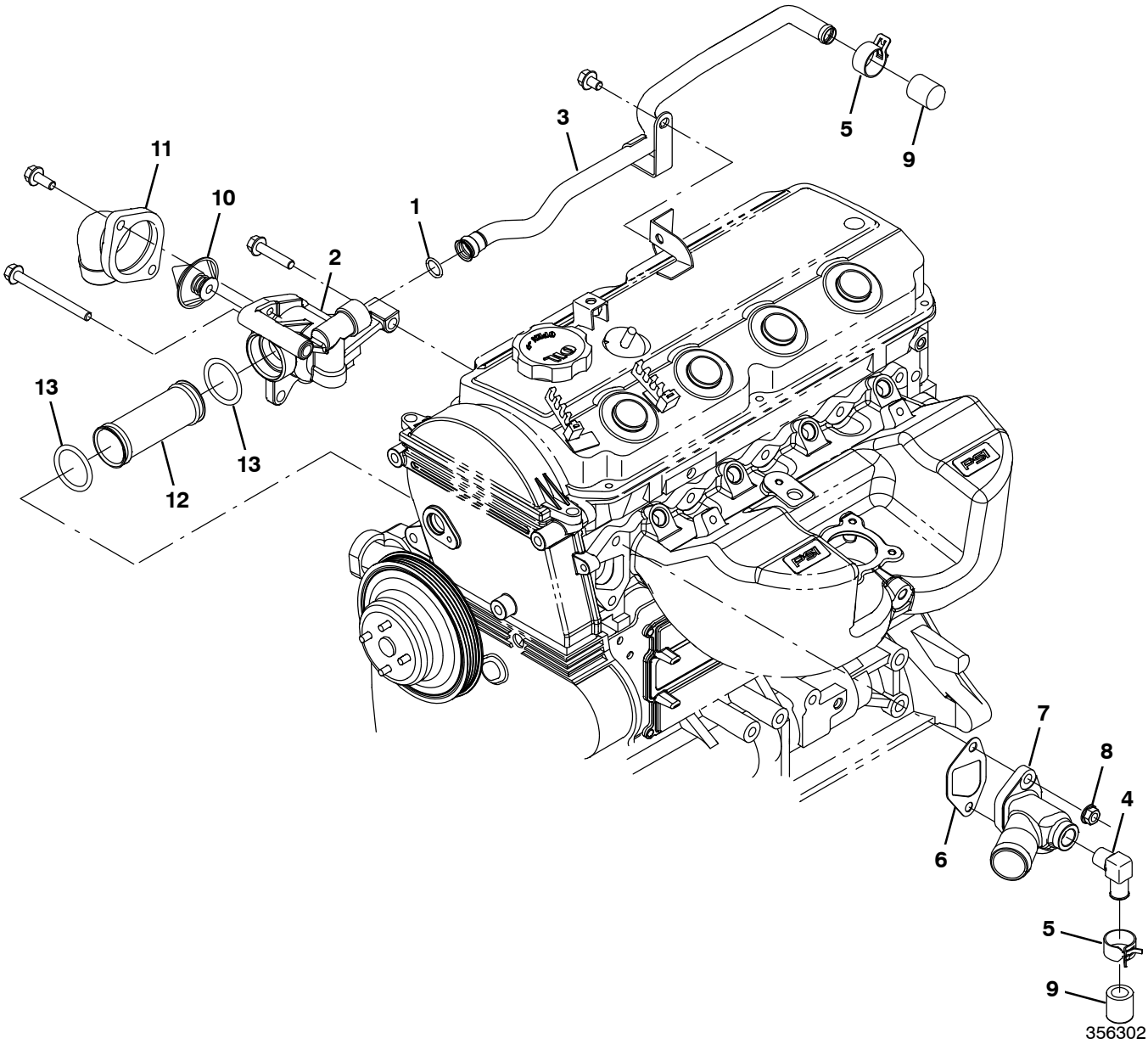

Ref.	Part No.	Description	Qty.
1	9010289	O–Ring [Mit 208 Buna–N]	1
2	9010290	Housing, T–Stat, 2 Holes [Mit]	1
3	9010291	Tube, Water, Line [Mit]	1
4	385011	Fitting, E90	1
5	384979	Clamp, Hose, Spring, 0.62d	2
6	9010632	Gasket, Outlet	1
7	9010294	Outlet, Water, W/Plug [Mit 2.0/2.4l]	1
8	385015	Nut, Flng, M8	2
9	9010295	Cap, Rubber, 5/8id [Mit 2.0/2.4l]	2
10	9010905	Thermostat Kit, Coolant, Replmt [Mitsub]	1
11	9010215	Housing, Thermostat	1
12	9010910	Tube, Pump, Water	1
13	9013530	Seal, Tube, Water [Mit 2.0l]	2

Fig. 18 – DSR Coolant Group, LPG Engine

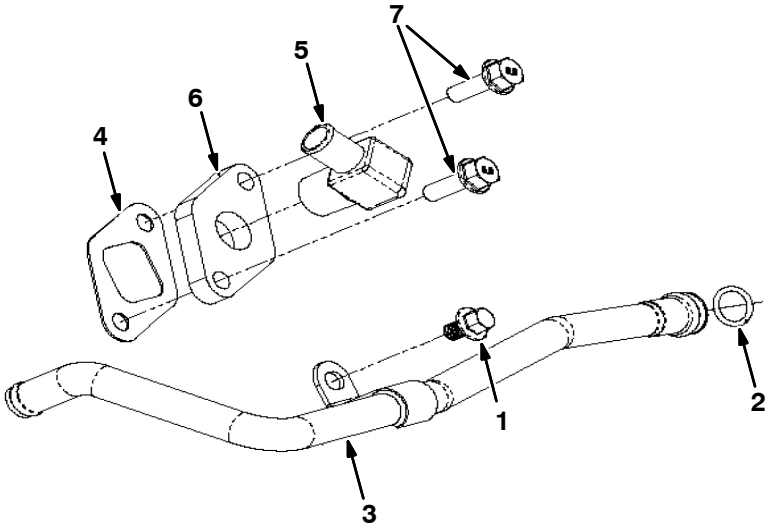

Ref.	Part No.	Description	Qty.
1	9010305	Bolt, M8–1.25 X 12 [Mit]	1
2	9010289	O–Ring [Mit 208 Buna–N]	1
3	9010306	Tube, Cooling, Line [Mit]	1
4	9010307	Gasket, Water Supply [Mit 2.0/2.4l]	1
5	9010308	Fitting, 1/2 Mpt X 5/8bh 90deg [Mit]	1
6	9010309	Plate, Water, Outlet [Mit Bypass]	1
7	9010310	Bolt, M8–1.25 X 25 Flg Hd [Mit]	2

Fig. 19 – Electrical Group

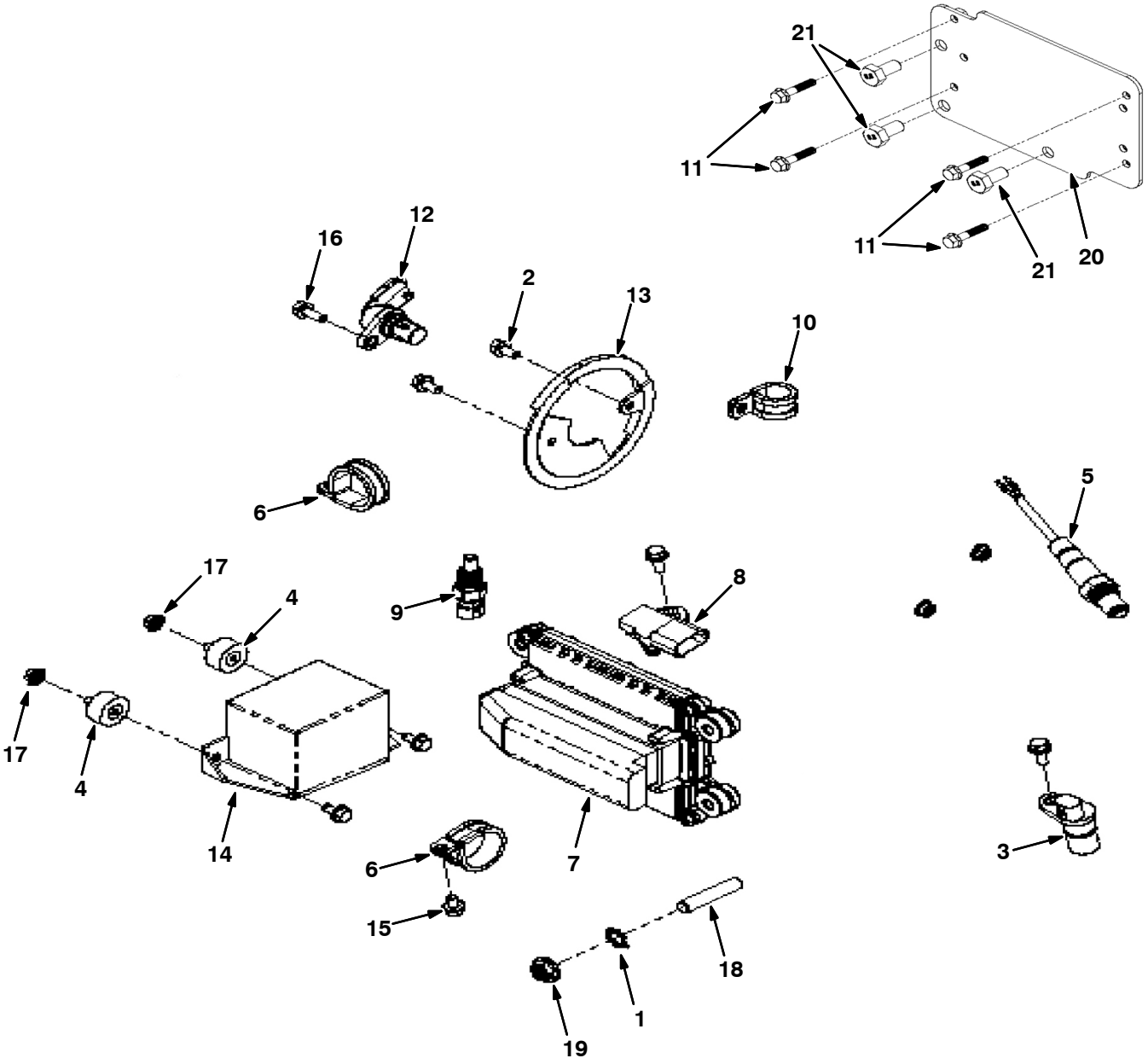

Fig. 19 – Electrical Group

Ref.	Part No.	Description	Qty.
1	9010255	Washer, Star, M10 [Mit]	1
2	9010256	Bolt, M6–1.0 X 12 Fl Hd Pl [Mit]	2
3	372492	Sensor, Spd, Timing Wheel [3.0l]	1
4	9008805	Isolator	2
5	1028558	Sensor, Oxygen, Tailpipe	1
6	9010257	Clamp, 1/4 Hole [Mit #20]	2
7	1071397	Module, Ecu, Gas [Mit 2.0l 2013]	1
7	1071398	Module, Ecu, Lpg [Mit 2.0l 2013]	1
8	372493	Sensor [Tmap]	1
9	372891	Sensor, Temp, Coolant	1
10	9010258	Clamp, 0.75d [Mit]	1
11	9010249	Bolt, M6–1.0 X 30 Fl Hd [Mit]	4
12	9010260	Sensor, Camshaft [Mit]	1
13	9010261	Cam, Sensor, Wheel [Mit 2.0/2.4l]	1
14	1071653	Harness, Wire, Eng, Gas [Mit, 2.0l]	1
14	1071654	Harness, Wire, Eng, Lpg [Mit, 2.Ol]	1
15	9010262	Bolt, M6–1.0 X 10 Fl Hd [Mit]	3
16	9010263	Bolt, M6–1.0 X 16 Fl Hd [Mit]	3
17	9010264	Nut, M6–1.0 Flange [Mit]	4
18	9010366	Stud, M10–1.25 X 50, Full Thrd [Mit]	1
19	9010367	Nut, M10–1.25, Hx Flg [Mit]	1
20	9010247	Plate, Mtg, Ecu [Mit 2.0/2.4l]	1
21	9010248	Bolt, M10–1.25 X 20 Hxhd [Mit]	3

Fig. 20 – Fuel Rail Group, Gasoline Engine

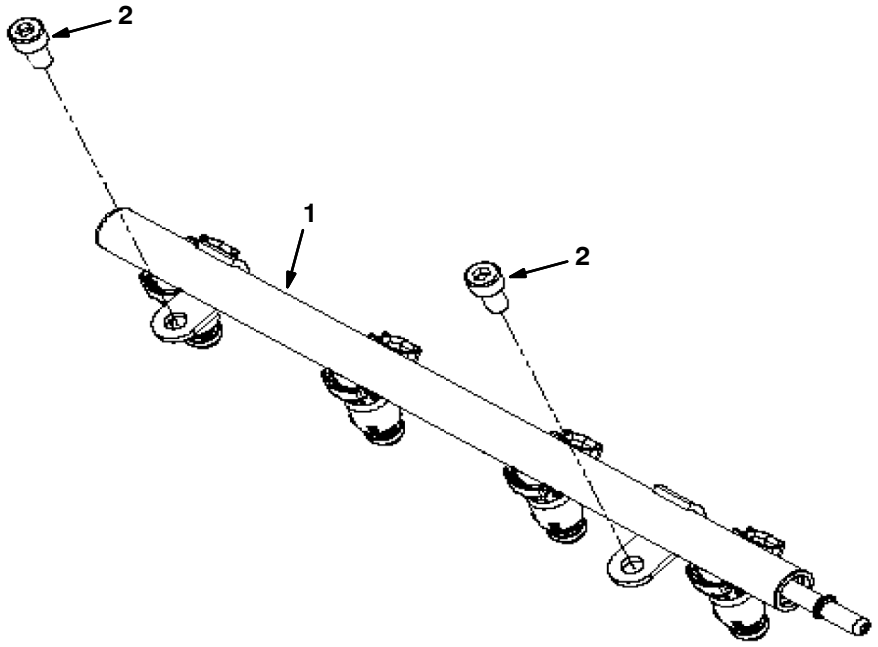

Ref.	Part No.	Description	Qty.
1	9015878	Manifold, Fuel [2.4l Mit]	1
2	9010327	Bolt, M8–1.25 X 16, Soc Hd [Mit]	2

Fig. 21 – Throttle Body Group, Gasoline Engine

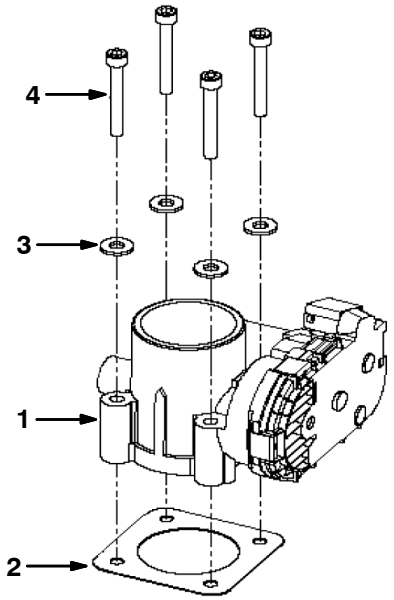

Ref.	Part No.	Description	Qty.
1	9010266	Throttle Body [Mit, Bosch]	1
2	9010268	Gasket, Throttle [Mit 40mm]	1
3	9010330	Washer, 1/4 Flat [Mit]	4
4	9010331	Bolt, M6–1.0 X 45, Skt Hd [Mit]	4

Fig. 22 – Throttle Body Group, LPG Engine

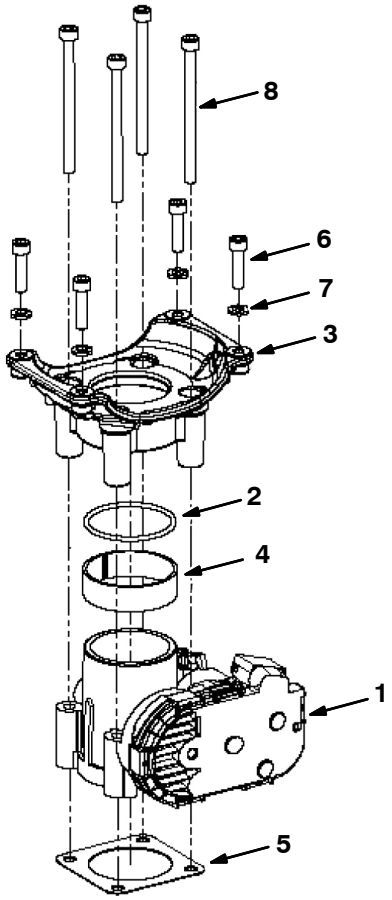

Ref.	Part No.	Description	Qty.
1	9010266	Throttle Body [Mit , Bosch]	1
2	1037311	Seal, Org, Lpg	1
3	9006619	Adapter	1
4	9010267	Spacer, Ring, Throttle [Mit 40mm]	1
5	9010268	Gasket, Throttle [Mit 40mm]	1
6	9010269	Bolt, M6–1.0 X 25 Soc Hd [Mit]	4
7	9010270	Washer, Lock, M6 [Mit]	4
8	9010271	Bolt, M6–1.0 X 85 Soc Hd [Mit]	4

Fig. 23 – Vaporizer Group, LPG Engine

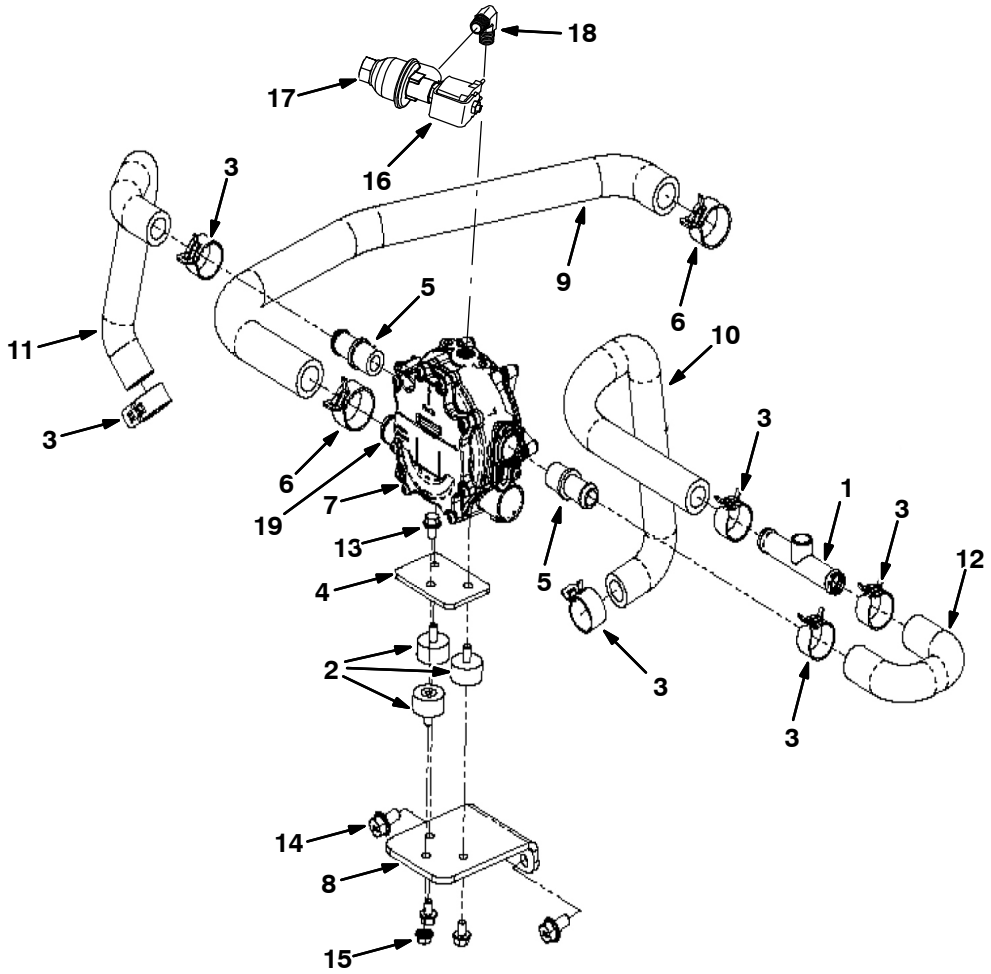

	Ref.	Part No.	Description	Qty.
	1	9010272	Hose Assy, Upper, Tap [Mit]	1
	2	9008805	Isolator	3
	3	384979	Clamp, Hose, Spring, 0.62d	6
	4	9008804	Plate, Mtg [Epr]	1
	5	9010273	Fitting, 1/2 X 5/8 Hose,Plastic[Mit]	2
	6	9010274	Clamp, Tension [Mit #29]	2
▽	7	9008193	Regulator	1
▲		9010626	Repair Kit, Vaporizer	1
	8	9010275	Bracket, Vaporizer [Mit 20/24m Tilt]	1
	9	9010276	Hose, Fuel, Molded [Mit 20/24m]	1
	10	9010277	Hose, Coolant, Molded [Mit 20/24m]	1
	11	9010278	Hose, Coolant, Molded [Mit 20/24m]	1
	12	9010279	Hose, Coolant, Molded [Mit 20/24m]	1
	13	9010262	Bolt, M6–1.0 X 10 Fl Hd [Mit]	3
	14	9010280	Bolt, M8–1.25 X 16 Fl Hd [Mit]	2
	15	9010264	Nut, M6–1.0 Flange [Mit]	1
▽	16	9006620	Lock–Off, 12v, Lpg [Mit]	1
▲	17	9007380	Filter Kit, Fuelock, Lpg	1
	18	9010317	Fitting, 1/4mpt X 1/4mpt, 90deg[Mit]	1
	19	9021786	Fitting, Hose, Plastic	1

Fig. 24 – Electronic Pressure Regulator (EPR) Group, LPG Engine

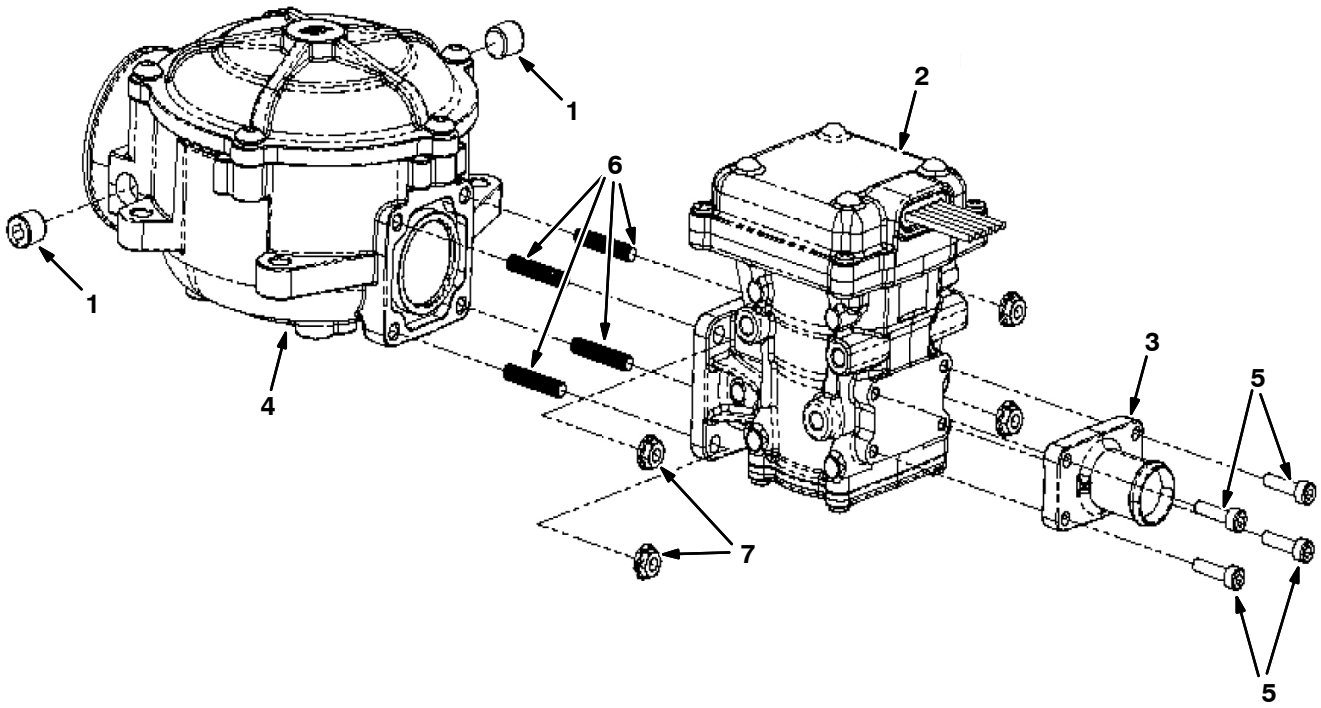

	Ref.	Part No.	Description	Qty.
	1	9010314	Plug, 1/8npt, Brs [Mit]	2
	2	9008806	Regulator, Press, Electronic [Epr]	1
	3	9008807	Fitting, Barb, 3/4” [Epr]	1
▽	4	9006618	Mixer , Lpg	1
▲		9010634	Repair Kit, Mixer	1
	5	9008808	Screw, Soc, M4 X 0.70 X 16	4
	6	9007424	Stud, M05–0.8	4
	7	9007423	Nut, Flng, M05–0.8	4