# 1610 READY SPACE®

*Dual Technology Carpet Cleaner*

**Setup**

*See Backside*

**Before Use**

**1**

**2**

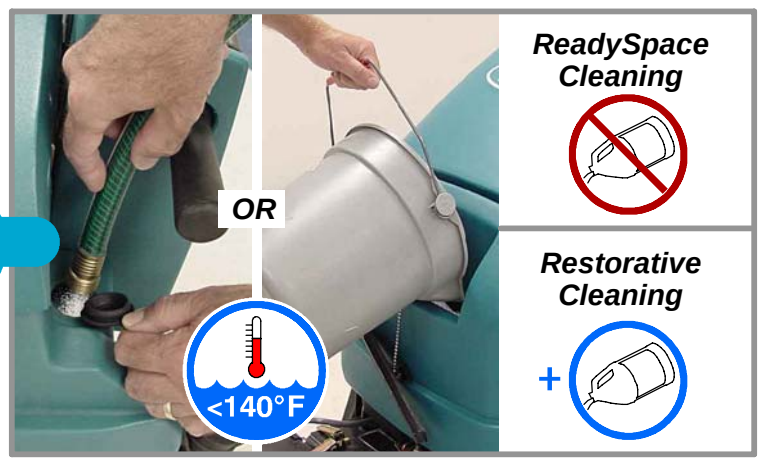


**Operate**

**3**

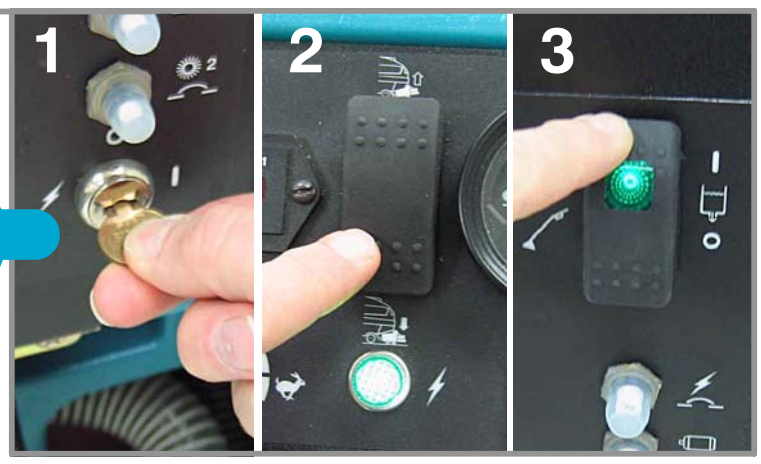


**4**

**5**

**After Use**

**6**

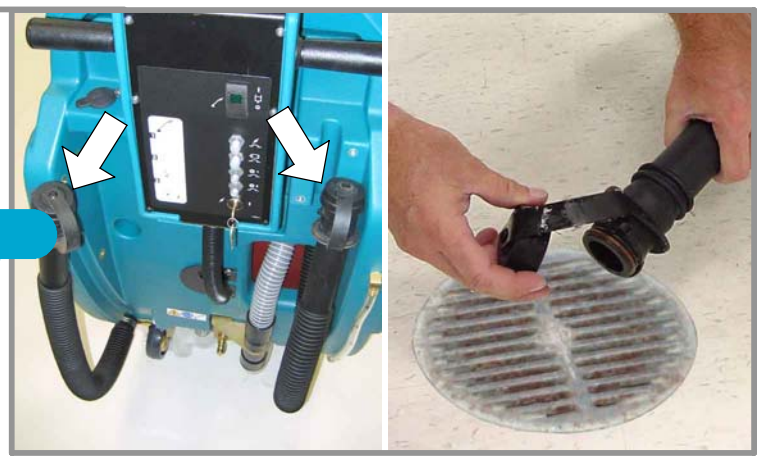

**7**

**8**

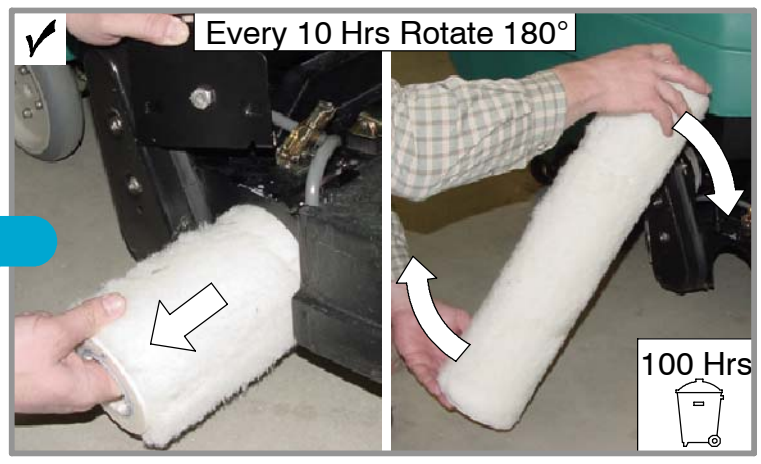


**9**

Clean Front & Rear Vacuum Shoe

**10**

# Setup *ReadySpace* Cleaning

**Equipment Needed:**

1) Two *ReadySpace* Rollers
2) Rear *ReadySpace* Vacuum Shoe
3) 6 mm Hex Head Tool (supplied with machine)

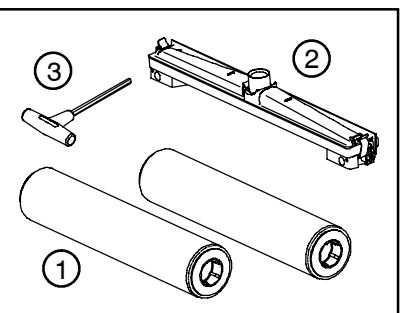


**FOR SAFETY: Remove key from machine before performing setup procedure.**

1. Install the two *ReadySpace* Rollers.
2. Install rear *ReadySpace* Vacuum Shoe.
3. Connect the two Solution Flush Lines to Vacuum Shoe.
4. Connect Vacuum Tube to Vacuum Shoe.
5. Connect Vacuum Hose to Vacuum Tube.

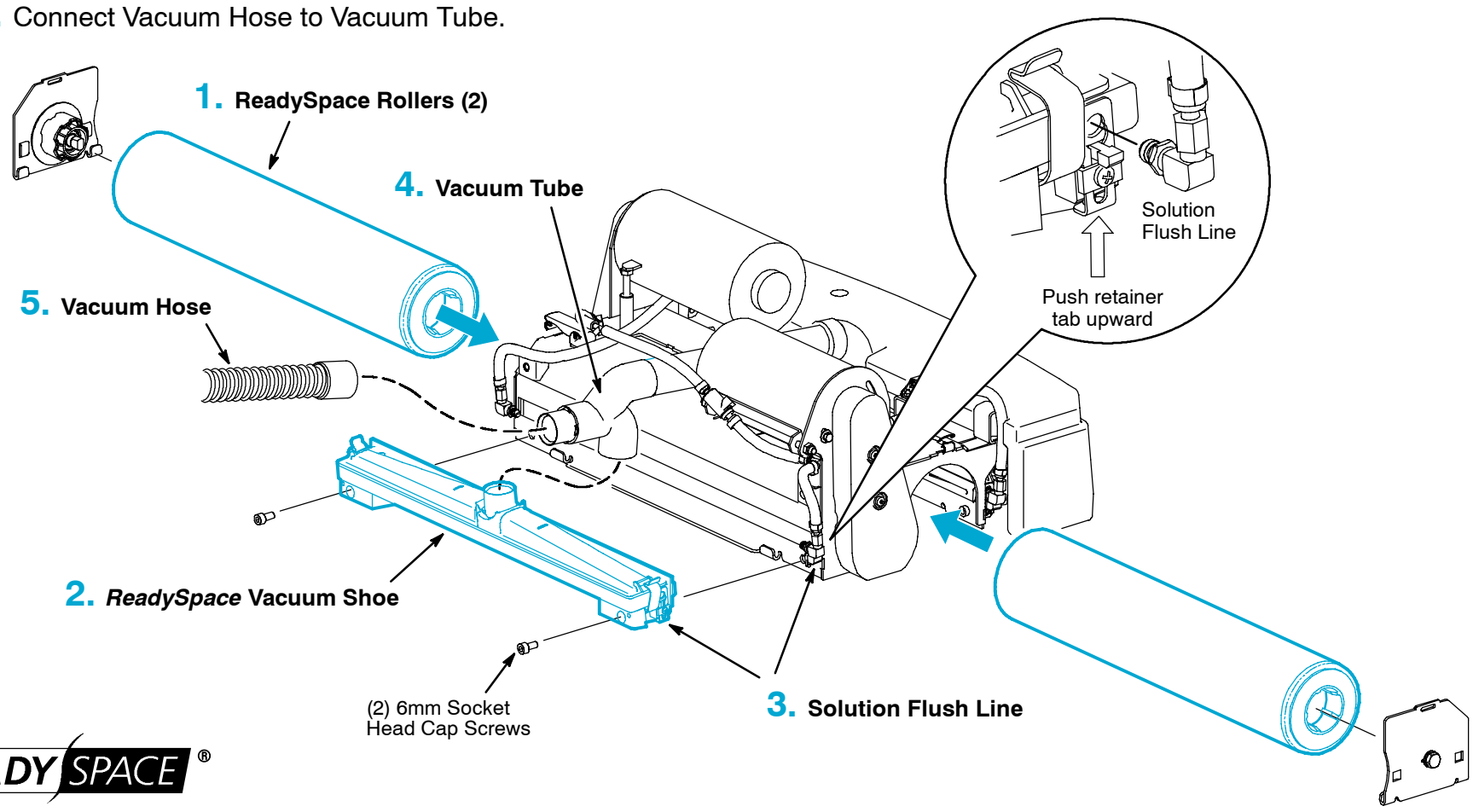


READY SPACE®

# Setup Restorative Cleaning

**Equipment Needed:**

1) Two Restorative Brushes
2) Restorative Vacuum Shoe
3) 6 mm Hex Head Tool (supplied with machine)

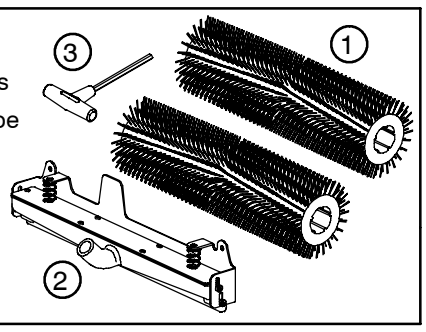


**FOR SAFETY: Remove key from machine before performing setup procedure.**

1. Install the two Restorative Brushes.
2. Install Restorative Vacuum Shoe.
3. Connect Vacuum Hose to Vacuum Shoe.
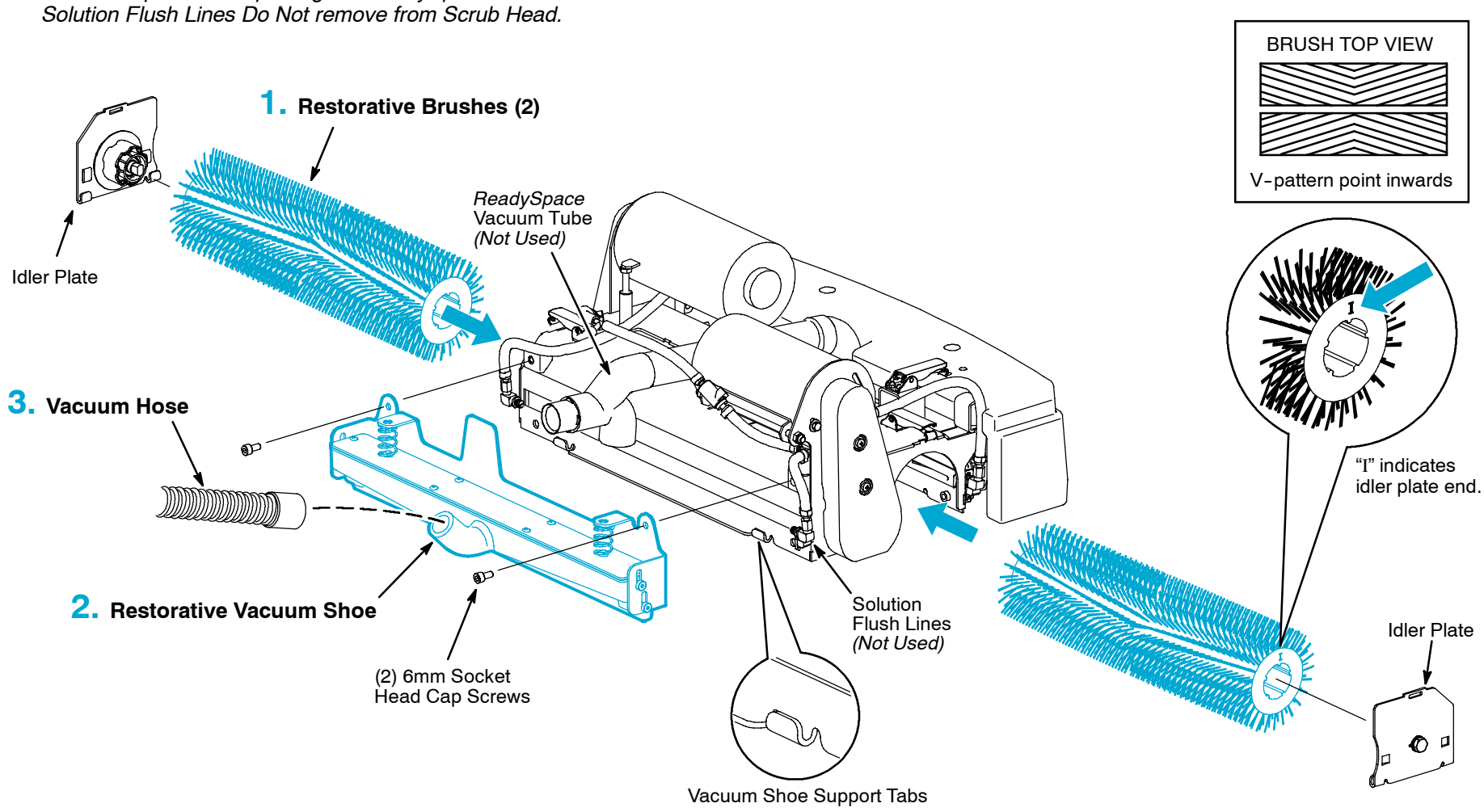
***NOTE:*** *To prevent misplacing the ReadySpace Vacuum Tube and Solution Flush Lines Do Not remove from Scrub Head.*