SC6000

Service Manual

Advance Model Numbers:

56116000	SC6000 36C
56116001	SC6000 40D
56116002	SC6000 34D

Nilfisk Model Numbers:

56116003	SC6000 910C
56116004	SC6000 1050D
56116005	SC6000 860D

Nilfisk trusted since 1906 | Advance

Language

June/2016 Form No. 56043174

Contents

03 - General Information . . . 7
General Machine Description . . . 7
Service Manual Purpose and Application . . . 7
Other Reference Manuals and Information Sources . . . 7
Parts And Service . . . 7
Diagnostic and Service Tools . . . 7
Conventions . . . 8
Modifications . . . 8
Nameplate . . . 8
Safety . . . 9
Symbols . . . 9
General Safety Instructions . . . 9
Lifting or Transporting the Machine . . . 11
Technical Specifications . . . 12
Fastener Torque Specifications . . . 13
Maintenance Schedule . . . 13
Lubricating the Machine . . . 14
Know Your Machine . . . 15

04 - Control System . . . 16
Functional Description . . . 16
Functional Block Diagram . . . 16
Wheel Drive Controller . . . 17
Power Module . . . 18
Main Machine Controller . . . 19
Main Controller Operational Modes . . . 20
Operational Mode Prerequisites . . . 20
Control Panel . . . 23
CAN Bus Communication . . . 24
Component Locations . . . 25
Main Machine Controller Programming . . . 26
Service Mode Access . . . 26
Menu Navigation . . . 26
Programming Menu Outline . . . 27
Hours Menu . . . 28
Faults Menu . . . 28
Keys Menu . . . 28
Authorizing User Keys . . . 28
Deauthorizing User Keys . . . 28
Service Menu . . . 29
E2 Main Controller . . . 29
E3 Power Module . . . 30
E4 Drive Controller . . . 31
Output Test . . . 32
Solution Solenoid . . . 32
Horn . . . 32
Backup Alarm (Optional) . . . 32
Detergent Pump 1 and 2 (Optional) . . . 32
Right and Left Brush . . . 33
Vacuum 1 and 2 . . . 33
Squeegee Lift . . . 33
Deck Lift . . . 33
Panel Test . . . 34
Options Menu . . . 34

Configuration Menu . . . 35
System Menu . . . 36
Impact Log . . . 36
Troubleshooting Guide . . . 36
Main Controller (E2) Error Codes . . . 36
Power Module (E3) Error Codes . . . 38
Specifications . . . 40
Sample Shop Voltage Measurements . . . 40
Main Control Board J1 Connector (Black) . . . 40
Main Control Board J2 Connector (Gray) . . . 41
Power Module J3 connector . . . 42
Power Module Heavy Current Lugs . . . 43
Motor Amp Draw measurements . . . 43
Removal and Installation . . . 44
Main Control Board . . . 44
KSI Relay . . . 45

14 - Wheel System, Non-Traction . . . 46
Functional Description . . . 46
Removal and Installation . . . 47
Rear Wheel Bearings and Seal . . . 47

20 - Wheel System, Traction . . . 48
Functional Description . . . 48
Drive Motor . . . 48
Drive Pedal Potentiometer . . . 48
Drive Controller . . . 49
Operational Mode Prerequisites . . . 50
Troubleshooting . . . 50
Drive Controller (E4) Error Codes . . . 50
Maintenance and Adjustments . . . 53
Drive Pedal Neutral Adjustment . . . 53
Removal and Installation . . . 54
Drive Controller . . . 54
Drive Wheel Assembly . . . 55
Electromechanical Brake . . . 58
Drive Tire . . . 59
Specifications . . . 62
Drive Controller J4 Connector . . . 62
Motor U, V and W Terminal Pair Voltages . . . 63
Motor U, V and W Terminal Pair Frequency . . . 63

22 - Steering System . . . 64
Functional Description . . . 64
Removal and Installation . . . 64
Steering Wheel . . . 64

24 - Electrical System . . . 65
Functional Description . . . 65
Low Voltage Cutout . . . 66
Troubleshooting . . . 67
Onboard Charger Interlock . . . 67
Battery Testing . . . 67
Maintenance and Adjustment . . . 68

Setting Onboard Charger Battery Profile . . . 68
Removal and Installation . . . 69
Batteries . . . 69
Paddle Switches . . . 70
Floor Panel . . . 71
Steering Column Cover . . . 71
Specifications . . . 72
Connector Pinouts . . . 72
Main Control Board J1 Connector . . . 72
Main Control Board J2 Connector . . . 73
Power Module J3 Connector . . . 73
Drive Controller J4 Connector . . . 74
TrackClean X163 Connector . . . 75
Level Sensor X79 Connector . . . 75
Steering Column Paddle X98 Connector . . . 75
Vacuum X157 Connector . . . 75
2 pin connectors . . . 76
Working with Schematics and Diagrams . . . 77
Navigation . . . 77
Common Schematic Symbols . . . 78
Wiring Diagram . . . 79
Wiring Harness Diagram . . . 82

30 - Solution System . . . 84
Functional Description . . . 84
Shutoff Valve . . . 84
Solution Solenoid . . . 84
Solution Level Sensors . . . 84
Wash Hose Option . . . 84
Dust Guard Option . . . 85
EcoFlex Option . . . 85
Operational Mode Prerequisites . . . 86
Troubleshooting . . . 87
Level Sensors . . . 87
Resetting a Float Position . . . 87
Detergent Pumps . . . 88
Removal and Installation . . . 88
Solution Solenoid . . . 88
Detergent Pumps . . . 89
Specifications . . . 90

34 - Scrub System, Disc. . . . 91
Functional Description . . . 91
Deck Lift Actuator . . . 91
Scrub Control . . . 92
Operational Mode Prerequisites . . . 92
Circuit Overview . . . 93
Maintenance and Adjustment . . . 94
Lift Actuator Limit Adjustment . . . 94
Removal and Installation . . . 96
Scrub Deck Doors . . . 96
Side Squeegees . . . 96
Scrub Deck . . . 97

Deck Lift Actuator . . . 98
Getting Neutral Weight on the Deck . . . 98
Brush Motor . . . 99
Brush Motor Brushes . . . 100
Specifications . . . 102
Special Tools . . . 102
Actuator Test Kit . . . 102

34 - Scrub System, Cylindrical . . . 103
Functional Description . . . 103
Deck Lift Actuator . . . 103
Scrub Control . . . 104
Operational Mode Prerequisites . . . 105
Circuit Overview . . . 105
Maintenance and Adjustment . . . 106
Lift Actuator Limit Adjustment . . . 106
Removal and Installation . . . 108
Scrub Deck Doors . . . 108
Side Squeegees . . . 108
Scrub Deck . . . 109
Deck Lift Actuator . . . 110
Getting Neutral Weight on the Deck . . . 110
Brush Drive Belt . . . 112
Brush Motor . . . 113
Brush Motor Brushes . . . 114
Specifications . . . 116
Special Tools . . . 116
Actuator Test Kit . . . 116

38 - Squeegee System . . . 117
Functional Description . . . 117
Squeegee Lift Actuator . . . 117
Squeegee . . . 118
Maintenance and Adjustment . . . 118
Squeegee Blade Cleaning and Inspection . . . 118
Squeegee Height and Tilt Adjustment . . . 119
Actuator Limit Adjustment . . . 120
Removal and Installation . . . 122
Rear (main) Squeegee Blade Reversal or Replacement . . . 122
Front Squeegee Blade Reversal or Replacement . . . 123
Squeegee Lift Actuator . . . 124
Specifications . . . 125
Special Tools . . . 125
Actuator Test Kit . . . 125

40 - Recovery System . . . 126
Functional Description . . . 126
Vacuum Motor and Recovery Tank . . . 126
Operational Mode Prerequisites . . . 126
Vacuum Motor Control Circuit Overview . . . 127
Troubleshooting . . . 128
Vacuum Suction Test . . . 129
Removal and Installation . . . 130
Vacuum Motor . . . 130
Vacuum Motor Brushes . . . 132
Specifications . . . 133
Special Tools . . . 133

90 - Options and Accessories 134
Dual Vacuum 134
EcoFlex 134
Side Sweep 134
Dust Guard 135
Beacon 135
Weight Kit 135
Foot Guard 135
Mop Holder 135
Wash Hose 136
Deluxe Seat 136
Overhead Guard 136
Heavy Duty Front Bumper 136
Onboard Charger 136
Battery Watering 136
Solution Autofill 137
Squeegee Guard 137
Headlights 137
Backup Alarm 137
Vac Wand 137
USB Power Port 137
TrackClean 138
Troubleshooting 138

03 - General Information

General Machine Description

The SC6000 machine is a battery-powered, ride-on, self-propelled commercial floor scrubbing machine with either a disc or cylindrical scrub system, and suitable for use in commercial applications. The machine is available with one of three deck types. The 34D/860D has a 34" (860mm) dual disc brush deck. The 40D/1050D has a 40" (1050mm) dual disc brush deck. The 36C/910C has a 36" (910mm) dual cylindrical brush deck.

The machine is powered by six, 6-volt batteries connected in series, to provide 36 VDC to the motors and controls.

Service Manual Purpose and Application

This Service Manual is a resource for professional service technicians. It provides information for understanding how the machine operates, where components are located, basic troubleshooting, maintenance and mechanical service operations.

The cover page of this manual lists each machine part number that the manual applies to. Compare the part number of the machine you are working on to the model numbers listed on the cover page to be sure you are using the correct manual.

Other Reference Manuals and Information Sources

Document Name	Document Number	Document Type
SC6000 Instructions for Use, Nilfisk	56091168	Operator’s Manual
SC6000 Instructions for Use, Advance	56091161	Operator’s Manual
SC6000 Parts List	56042640	Parts List

Parts And Service

Repairs should be performed by an Authorized Nilfisk/Advance Service Center that employs factory-trained service personnel and maintains an inventory of Nilfisk/Advance original replacement parts and accessories.

Diagnostic and Service Tools

In addition to a full set of metric and standard tools, the following items are required in order to successfully and quickly perform troubleshooting and repair of Advance commercial floor cleaning equipment.

- Digital voltmeter (DVM) with DC current clamp
- Hydrometer
- Battery load tester for checking batteries
- Set of torque wrenches

These tools are also available from Nilfisk-Advance, Inc.:

- Vacuum water lift gauge, p/n 56205281.

Conventions

All references to right, left, front and rear in this manual are as seen from the Operator's position.

Modifications

Modifications and additions to the cleaning machine which affect capacity and safe operation shall not be performed by the owner or user without prior written approval from Nilfisk Inc. Unapproved modifications will void the machine warranty and make the owner/user liable for any consequential damages.

Nameplate

The nameplate contains important identification information which will be needed when ordering parts: The Model Number (Part No.) and Serial Number of the machine are shown on the Nameplate located on the rear of the frame above the squeegee.

Safety

Symbols

It is important for you to read and understand this manual. The information it contains relates to protecting your safety and preventing problems. The symbols below are used to help you recognize this information.

DANGER: ***Indicates a potentially hazardous situation which, if not avoided, will result in death or serious injury.***

WARNING: ***Indicates a potentially hazardous situation which, if not avoided, could result in death or serious injury.***

CAUTION: ***Indicates a potentially hazardous situation which, if not avoided, could result in minor or moderate injury.***

Note: *Indicates an important informational message.*

General Safety Instructions

These safety instructions are included to warn you of potential bodily injury or property damage.

CAUTION: ***Read and understand all safety warnings and instructions. Failure to follow the warnings and instructions may result in electric shock, fire, and/or serious injury.***

- ***To avoid personal injury, this machine should be used only by properly trained and authorized persons.***
- ***Do not operate the machine near toxic, dangerous, flammable and/or explosive materials. This machine is not suitable for collecting dangerous or hazardous materials.***
- ***In case of fire, use a powder fire extinguisher, not a water-based extinguisher.***
- ***Do not use on surfaces having a gradient exceeding that marked on the machine. While on ramps or inclines, avoid sudden stops when loaded. Avoid abrupt sharp turns.***
- ***Disconnect the power source and/or batteries before servicing electrical components***
- ***Never work under a machine without safety blocks or stands to support the machine.***
- ***Do not dispense flammable cleaning agents, operate the machine on or near these agents, or operate in areas where flammable liquids exist.***
- ***When using floor cleaning detergents, follow all safety and handling instructions of the respective manufacturer.***
- ***Battery charging may produce highly explosive hydrogen gas. Charge the batteries only in well-ventilated areas and away from ignition sources or open flames.***
- ***Safe operation of this machine requires the operator to ensure others within close proximity are not endangered or the machine is not left operational and unattended allowing unauthorized use.***
- ***Take precautions to prevent hair, jewelry, or loose clothing from becoming caught in moving parts.***

Property Damage Messages

- ***Storage and operation temperature must be above 0°C and a humidity between 30% and 95%, non-condensing.***
- ***Before use, all doors and hoods should be properly latched.***
- ***This machine is not approved for use on public paths or roads.***
- ***This machine is only approved for hard surface use.***
- ***Use brushes and pads supplied with the machine or those specified in the User Manual. Using other brushes or pads could reduce safety.***
- ***Do not wash the machine with direct or pressurised water jets, or with corrosive substances.***
- ***Do not allow the brush/pad to operate while the machine is stationary to avoid damaging the floor.***
- ***Use only factory authorized parts and accessories.***
- ***This machine must be properly disposed of in accordance with local laws and regulations.***

Lifting or Transporting the Machine

CAUTION: Never work under a machine without safety stands or blocks to support the machine.

- ***Drain the recovery and solution tanks to prevent sloshing water from unbalancing the machine.***
- ***Lift only from the subframe of the machine, as shown below.***
- ***Secure the machine to the transport using the tie down points shown below.***

The actual procedure for transporting the machine will vary depending on the mode of transport. Follow these general guidelines as applicable to the situation.

- If the machine is not operational, you must manually release the brake. To release the brake, move the release handle outward and insert an object, such as a screw driver, behind the lever to keep it deactivated.
- Remove the squeegee from the machine. This is required to access the rear hold down points and also protects the squeegee during loading, unloading, and transport.
- If the loading, unloading, or transport operations pose a risk for damage to the scrub deck, then remove the scrub deck (page 97 or page 109).
- If transport will occur below freezing temperatures, place a small amount of environmentally friendly antifreeze in the recovery tank, solution tank, and solution lines.
- Make sure all doors, panels, and covers are secure.

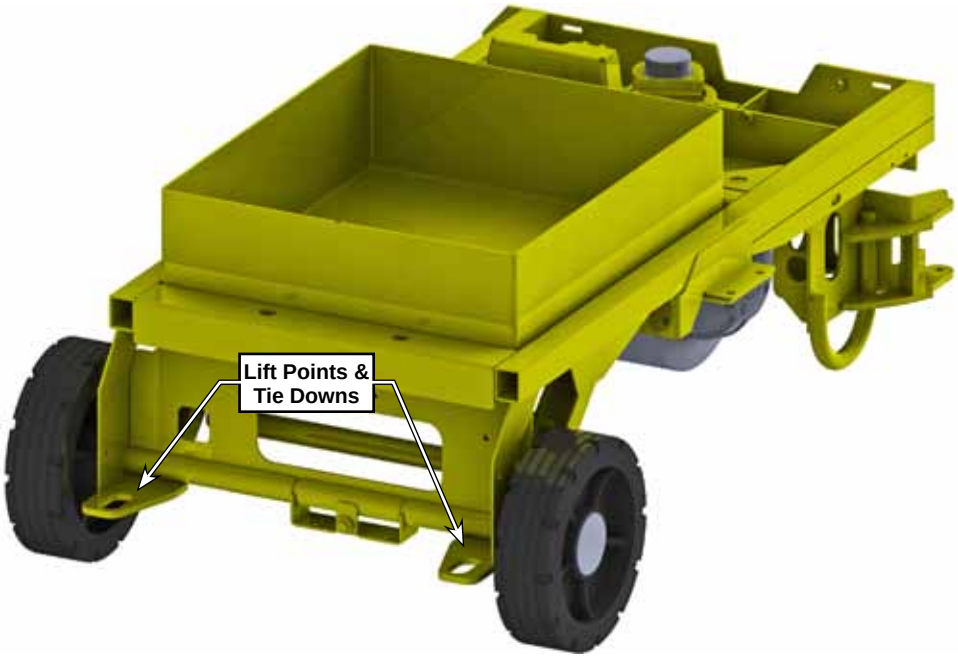

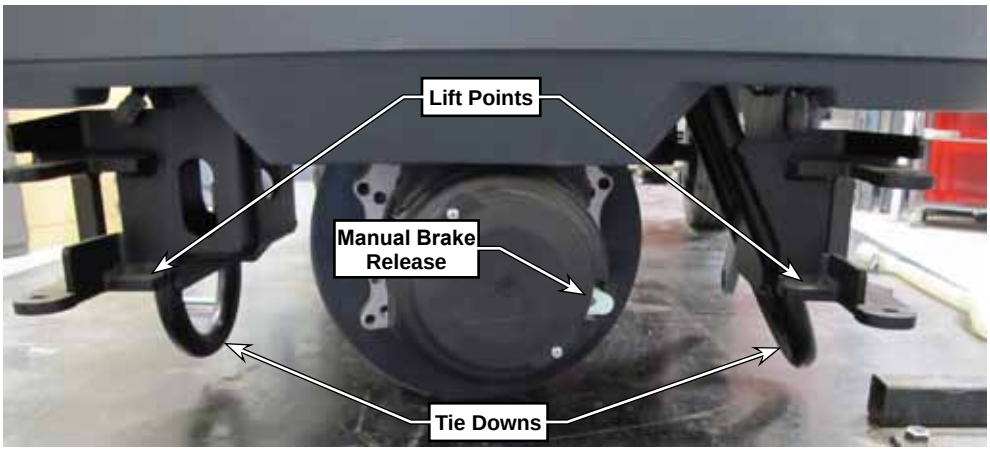

Technical Specifications

Model	36C/910C	34D/860D	40D/1050D
Model No.	56116000 / 56116003	56116002 / 56116005	56116001 / 56116004
Voltage, Batteries V	36V		
Battery Capacity (max) Ah	420		
Protection Grade, Operating	Class 3		
Protection Grade, Charging	Class 1		
Sound Pressure Level IEC 60335-2-72: 2002 Amend. 1:2005, ISO 11201 dB(A)/20µPa	69		
Sound Pressure level - KpA (IEC 60335-2-72, ISO 11201) Uncertainty dB(A)	3.0		
Gross Vehicle Weight* lbs / kg	2359 / 1070	2359 / 1070	2359 / 1070
Transportation Weight** lbs / kg	1784 / 810	1784 / 810	1784 / 810
Maximum Wheel Floor Loading (center front) psi / kg/cm^2	120 / 8.43	104 / 7.31	120 / 8.43
Maximum Wheel Floor Loading (right rear) psi / kg/cm^2	128 / 8.99	121 / 8.50	128 / 8.99
Maximum Wheel Floor Loading (left rear) psi / kg/cm^2	110 / 7.73	109 / 7.66	110 / 7.73
Vibrations at the Hand Controls (ISO5349-1)m/s^2	<2.5	<2.5	<2.5
Vibrations at the Seat (EN 1032) m/s^2	<0.04	<0.02	<0.02
Gradeability: Transport, with weight kit	Nilfisk only, 20.9% (11.8°)		
Gradeability: Transport, without weight kit	18.5% (10.5°)		
Gradeability: Cleaning, with weight kit	Nilfisk only, 16.9% (9.6°)		
Gradeability: Cleaning, without weight kit	12.2% (7°)		
Machine Length inch / cm	70 / 178		
Machine Height inch / cm	62.3 / 158		
Machine Height (w/ overhead guard) inch / cm	82 / 208		
Machine Height (w/ short overhead guard) inch / cm	Nilfisk Only, 78.75 / 200		
Machine Width inch / cm	46 / 117	39 / 99	46 / 117
Machine Width with Squeegee inch / cm	48.5 / 123	43 / 109	48.5 / 123
Minimum Aisle Turn Width inch / cm	79.5 / 202		
Solution Tank Capacity Gallon / L	50 / 190		
Recovery Tank Capacity Gallon / L	47 / 178		
Transport Speed (Fwd. Maximum) mph / kph	5.6 / 9.0		
Transport Speed (Rev. Maximum) mph / kph	2.6 / 4.2		
Battery Compartment Size (approximate)	Height (maximum) 17.25 inch / 43.8 cm Width (maximum) 22 inch / 55.9 cm Length (maximum) 24 inch / 61 cm		
Scrub brush size (2 per machine)	7.1 x 35.58 inch 18 x 90.4 cm	Ø 17 inch Ø 43 cm	Ø 20 inch Ø 51 cm
Scrub Brush Speed	760 RPM	250 RPM	250 RPM
Hopper Capacity - Cylindrical	744 in^3/ 12.2 L	----	----
Cleaning Path Width inch / cm	36 / 91.4	34 / 86.3	40 / 101.6
Sweeping Path with optional side broom -inch / cm	40 / 101.6	----	----

Fastener Torque Specifications

	Size	Plated Steel	Stainless Steel
Standard Torque Specifications (unless otherwise specified)	#10	42 in.-lb.	28 in.-lb.
	1/4“	100 in.-lb.	67 in.-lb.
	5/16”	17 ft.-lb.	11 ft.-lb.
	3/8”	31 ft.-lb.	20 ft.-lb.
	1/2”	75 ft.-lb.	50 ft.-lb.
	3/4”	270 ft.-lb.	180 ft.-lb.
	M5	61 in.-lb.	36 in.-lb.
	M6	9 ft.-lb.	62 in.-lb.
	M8	22 ft.-lb.	13 ft.-lb.
	M10	44 ft.-lb.	25 ft.-lb.
	M12	70 ft.-lb.	40 ft.-lb.

Maintenance Schedule

Maintenance intervals given are for average operating conditions. Machines used in severe operational environments may require service more often.

Maintenance Item	Interval			
	Daily	Weekly	Monthly	Yearly
Charge Batteries	•			
Check/Clean Tanks & Hoses	•			
Check/Clean/Rotate the Brushes/Pads	•			
Check/Clean the Squeegee	•			
Empty/Clean Debris Catch Tray in Recovery Tank	•			
Check/Clean the vacuum motor foam filter	•			
Clean Hopper on Cylindrical System	•			
Check Battery Cell Water Level (does not apply to gel cell batteries)		•		
Inspect Scrub Housing Skirts		•		
Inspect and clean Solution Filter		•		
Clean Solution Trough on Cylindrical System		•		
Purge Detergent System (if present)		•		
Lubricate the Machine			•	
Check Vacuum Motor Carbon Brushes (replace motor at 2000 hrs)				1200 Hrs
Check Brush Motor Carbon Brushes				•

Note: *See the individual machine system sections for maintenance information.*

Lubricating the Machine

- Once a month, apply light machine oil to lubricate the components marked by **(B)** below:
- Once per quarter Grease the components marked by **(A)** below.

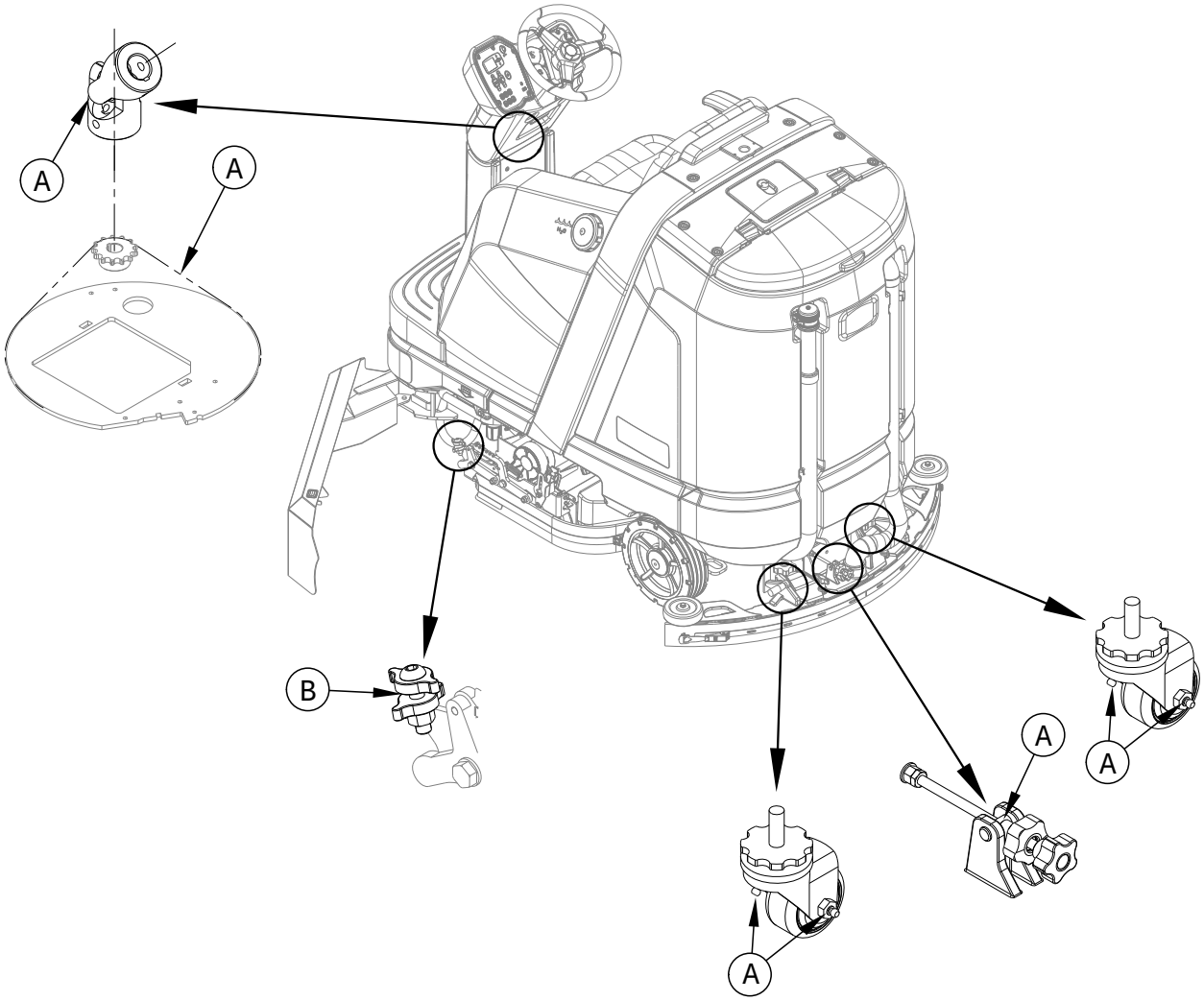

Know Your Machine

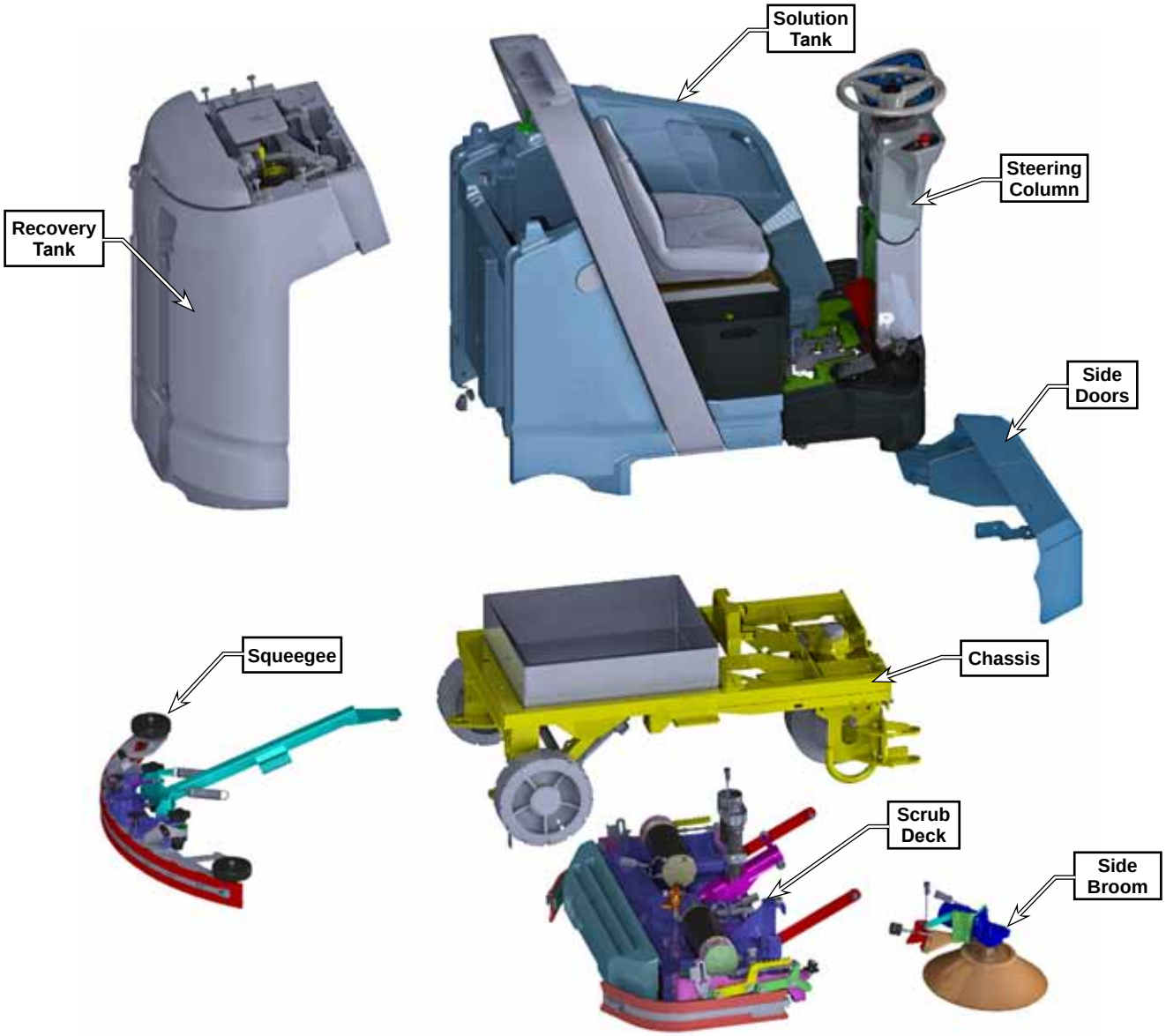

04 - Control System

Functional Description

Within the SC6000 system there are three primary controllers: the Main Machine Controller **(E2)**, the Power Module **(E3)**, and the Wheel Drive controller **(E4)**. The three modules communicate with one another via a CAN Bus (Controller Area Network).This permits each of the modules to perform their separate functions, while still functioning as a complete system. (There is also a second, separate CAN Bus between the Main Machine Controller and the optional TrackClean Module.)

Functional Block Diagram

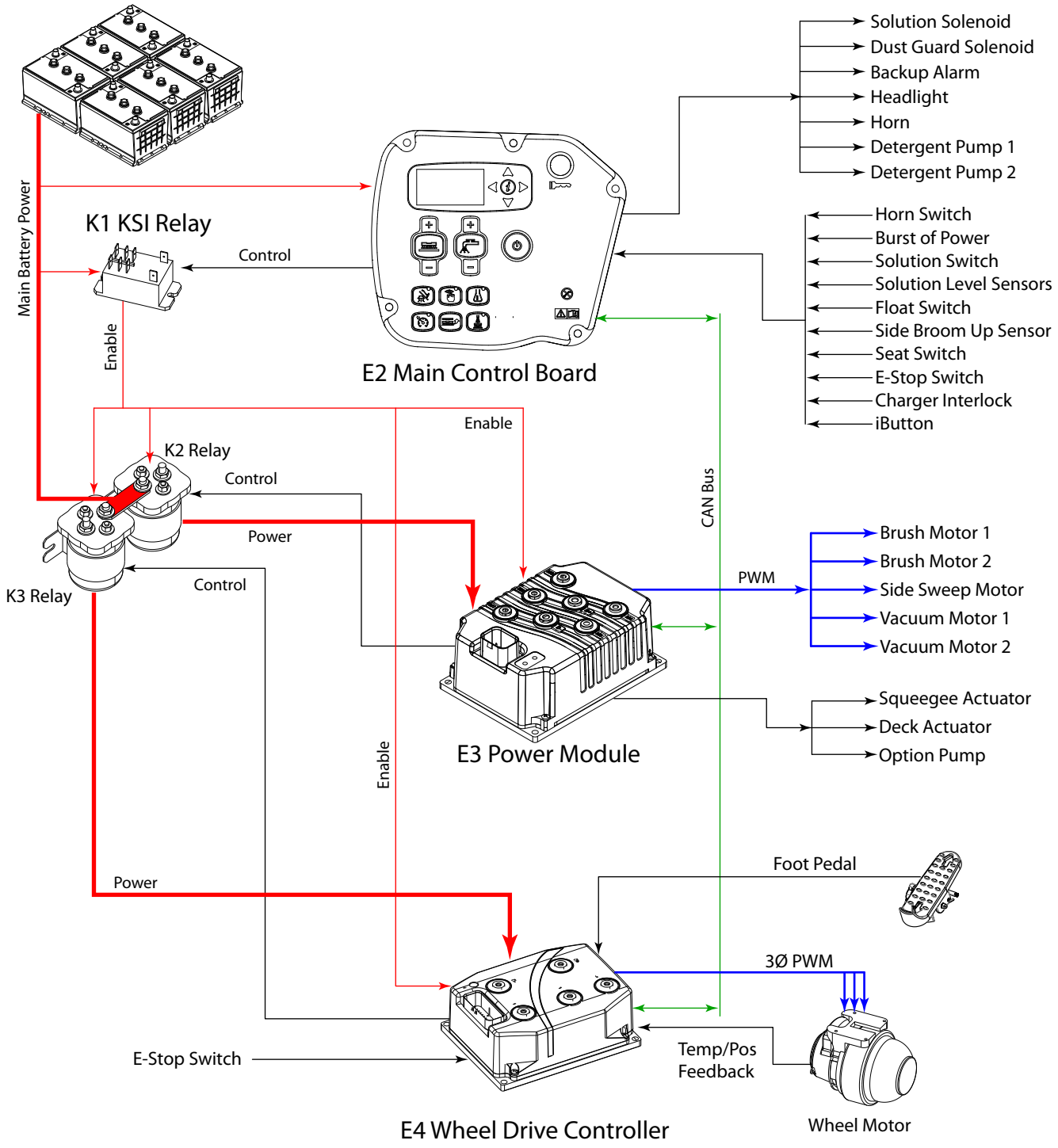

Wheel Drive Controller

The wheel drive controller operates and monitors the wheel motor. It generates a 3-phase Pulse Width Modulated (PWM) power control to the wheel motor. Even though it is actually DC power, it resembles a 3-phase system because the polarity reversals and zero-crossings resemble a 3-phase AC system. This pseudo 3-phase power permits the wheel motor to achieve full torque at near zero rpm, and very precise position control.

In order to generate this pseudo 3-phase signal, the drive controller needs to know the exact rotational position of the rotor inside the wheel motor. This is referred to as Remotely Commutated (i.e. brushless motor). The motor tells the controller what its rotational position is, and which of its 3 primary windings should be energized in order to rotate in the desired direction. This is accomplished with a pair of encoders inside the motor that send pulsed timing signals back to the controller to identify its exact position.

The controller also monitors the internal temperature of the motor to protect it from damage due to overheating.

The drive controller receives its logic power from the KSI relay, but it controls its own high-power input through the K3 relay. When the main machine controller has not energized the KSI relay, the drive controller is off. The drive controller also has 2 enabling inputs directly from the operator's seat switch, and the E-stop button. If either one of these switches is open, the drive is disabled, but has power.

The drive controller receives its direction and speed control directly from the operator's foot pedal. The drive pedal is a variable resistor that the drive controller sees as a varying voltage input from 0 to 5 volts. The midpoint voltage is considered neutral, and voltages above that are forward, and voltages below that are reverse. The main machine controller can also reduce the maximum speed (from 100%) through commands on the CAN Bus.

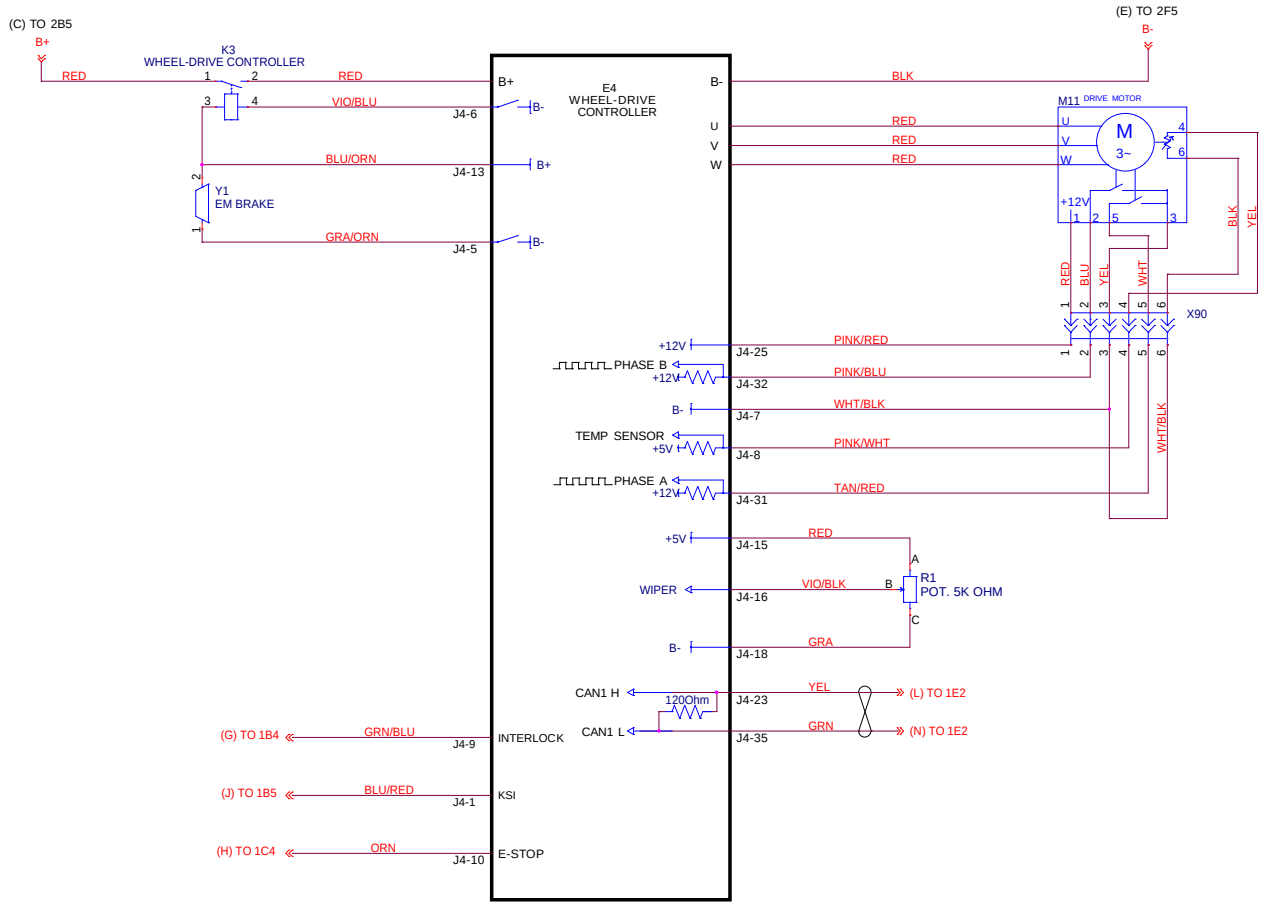

Power Module

As the name suggests, the power module handles the high-power output functions for the machine. It receives its commands from the main machine controller via the CAN Bus network. The power module provides basic motor control and protection, but the main machine controller controls the actual operation commands for the motors.

The power module receives its logic power from the KSI relay, which is controlled by the main machine controller. The power module has control of its own high-power input from the K2 relay. Unlike the drive module, the power module has no direct inhibit input signals (i.e. seat switch or E-stop), except by commands on the CAN Bus.

The power module has 2 types of outputs. The higher power outputs are non-reversing PWM control. The lower power outputs are reversing PWM control. The power module is capable of monitoring the output amperage from each of the outputs, and reporting this information to the main machine controller via the CAN Bus.

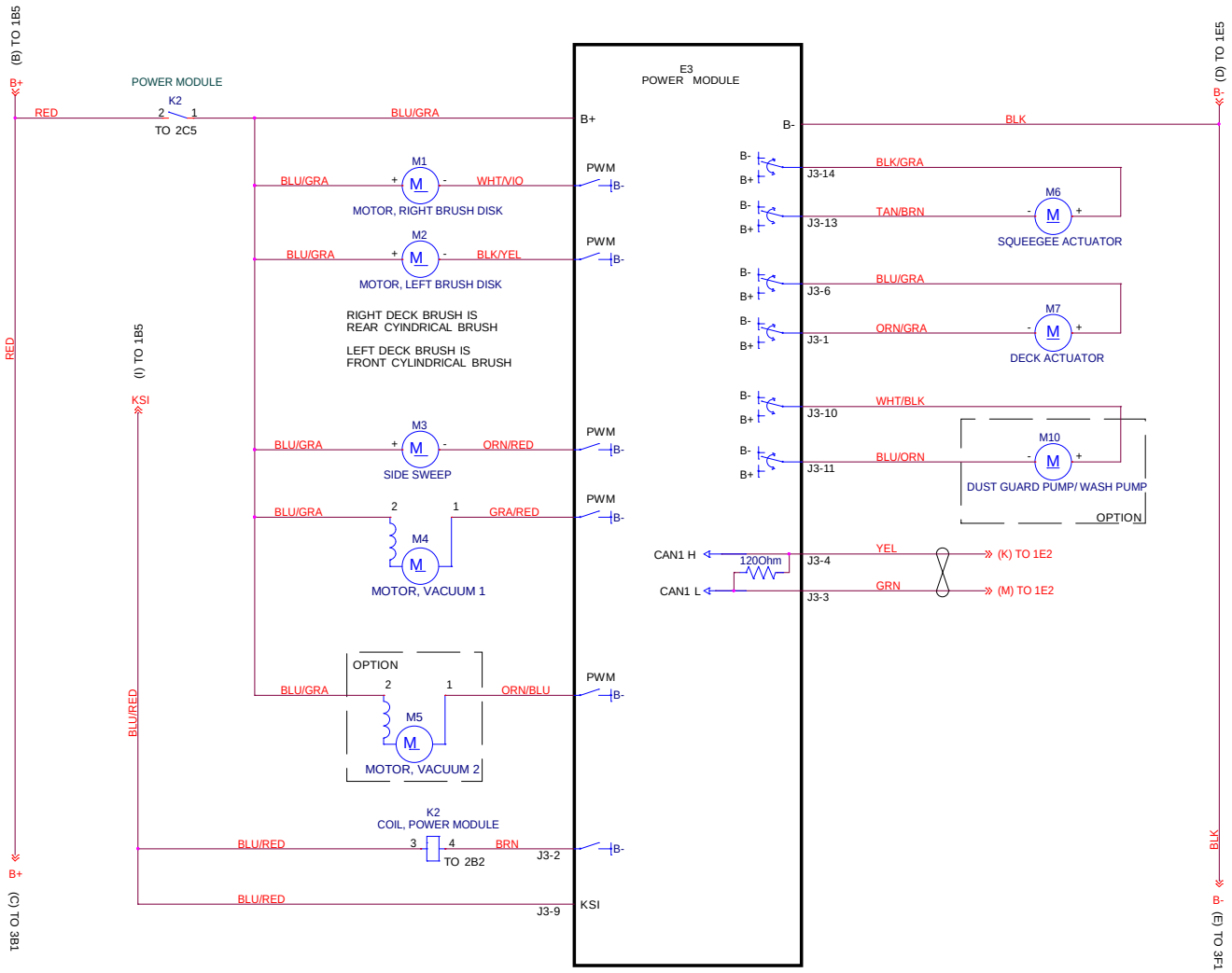

Main Machine Controller

As the name implies, the Main Machine Controller (MMC) is the primary controller for the system. The MMC functions as the primary interface for the operator, and directly or indirectly controls the functions of the machine. Because the MMC controls the on/off function of the whole machine, it is always receiving logic power through the 10 amp circuit breaker, but controls the status of the KSI relay to itself and the other controllers.

The MMC communicates with the Power and Wheel Drive controllers through the CAN Bus. It also uses a second CAN Bus to communicate with the optional telemetry module.

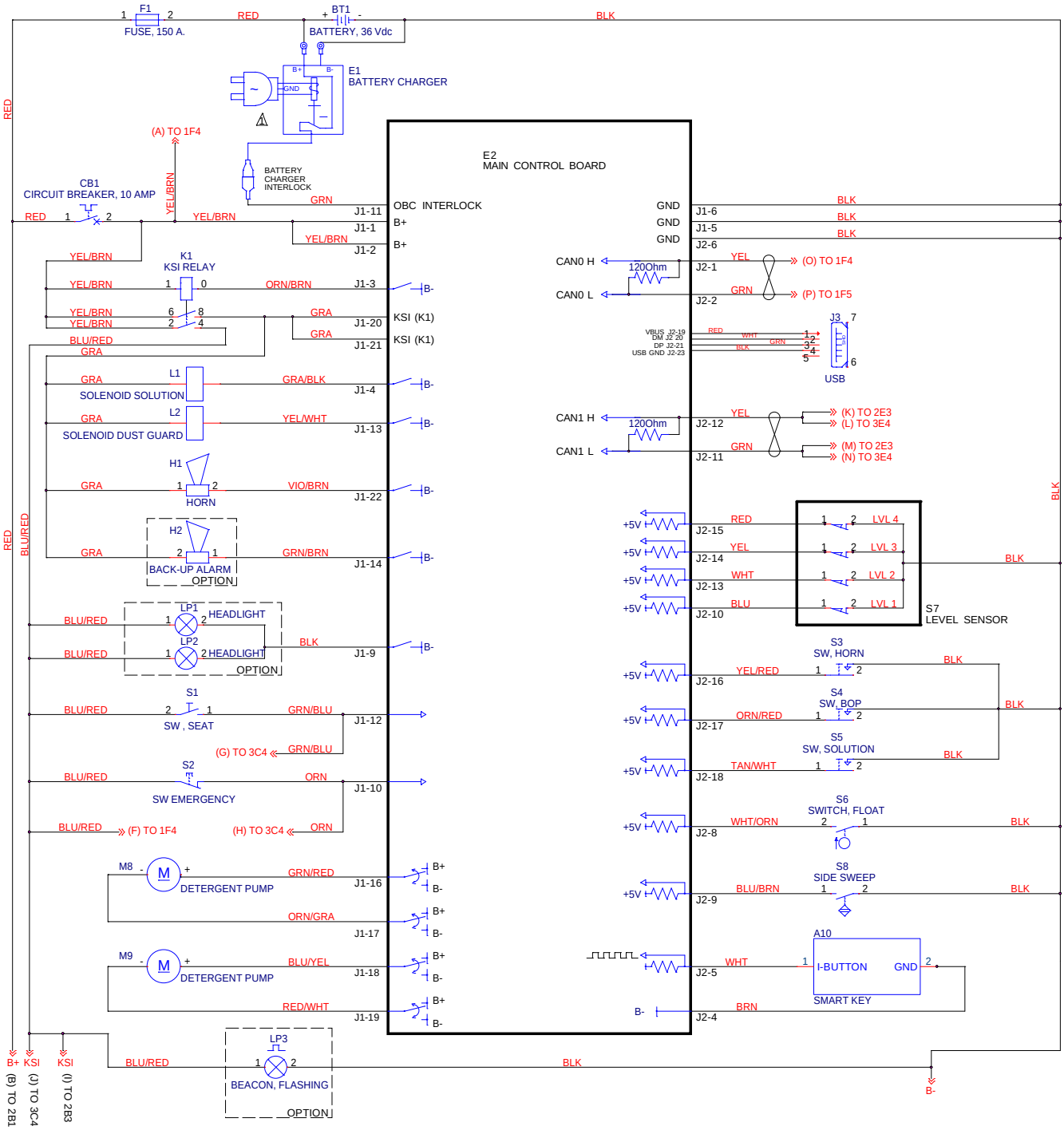

Main Controller Operational Modes

The main controller is firmware driven using a micro controller to set operational modes based on machine input and function. These modes of operation are described below.

- Normal Modes
  - Active Scrub
  - Recovery only (Wand or regular recovery)
  - Disc brush install
  - Detergent purge
- Inhibit modes
  - Estop – shuts down all systems including drive. Reset with Estop switch. Has icon displayed.
  - Impact lock-out – shuts down scrub, solution and recovery system. Has padlock icon displayed. Reset by power on with supervisor key.
  - Low voltage cut-out – has icon displayed
    - First stage – shuts off scrub
    - Second stage – shuts off recovery too
  - Recovery Tank Full (RTF) – Shuts off scrub solution and vacuum. Has icon displayed.
  - Critical Fault – shuts down scrub solution and recovery. Has exclamation triangle icon displayed

Operational Mode Prerequisites

Before the main controller can activate any of the operational modes, it must first check that the appropriate prerequisites are met.

- **Scrub System Outputs**
  - Brush Motors M1 and M2 or Deck Actuator M7 (seat switch must be closed to enter scrub mode)
    - No scrub system fault (brush motors and actuator motor)
    - No recovery system fault (vac motors and squeegee)
    - Throttle command not equal to zero
    - No Estop inhibit
    - No impact lockout inhibit
    - No low voltage cut out inhibit (first or second stage)
    - No RTF inhibit
- **Recovery System Outputs**
  - Vac motors M4 and M5 – Recovery mode (Seat switch closed upon entry) or Squeegee Actuator M6
    - No recovery system fault (vac motors and squeegee)
    - Throttle command not equal to zero (and not timed out)
    - No Estop inhibit
    - No impact lockout inhibit
    - No low voltage cut out inhibit (second stage)
    - No RTF inhibit
    - Note M5 also requires Vacuum option set to dual in configuration menu

  - Vac motors M4 and M5 – Wand mode (seat switch open upon entry) or Squeegee Actuator M6
    - No recovery system fault (vac motors and squeegee)
    - No Estop inhibit
    - No impact lockout inhibit
    - No low voltage cut out inhibit (second stage)
    - No RTF inhibit
    - Note M5 also requires Vacuum option set to dual in the configuration menu
- **Solution System Outputs**
  - Solution Solenoid L1 –
    - Scrub system active
    - No solution solenoid fault
    - No recovery system fault (vac motors and squeegee)
    - Throttle command not equal to zero
    - No Estop inhibit
    - No impact lockout inhibit
    - No low voltage cut out inhibit (first or second stage)
    - No RTF inhibit
    - Not turned off with the membrane switch
    - Not momentarily turned off by the solution timed off paddle switch input
  - Spray wash pump M10
    - No spray wash pump M10 fault
    - Solution tank is not empty
    - Option (Opt) pump in configuration menu set to “Spray Wash”
- **Detergent System outputs**
  - Detergent Pumps M8 and M9
    - Solution system is active
    - EcoFlex is enabled in the configuration menu
    - Not turned off with the control panel detergent switch
- **Side Sweep System Outputs**
  - Side Sweep Motor M3
    - No sweep motor M3 fault
    - Scrub brushes active
    - Side Sweep set to “yes” in the configuration menu
    - Side Sweep switch open
  - Dust Guard Pump M10
    - No dust guard solenoid L2 fault
    - No option pump M10 fault
    - Side sweep motor active
    - Solution tank is not empty
    - Option (Opt) pump in configuration menu set to “Dust Guard”
    - No Estop inhibit

- **Other Main Controller outputs**
  - Dust Guard Solenoid L2 – See above (same as dust guard pump)
  - Horn H1
    - Always active. Follows S3 horn switch input.
  - Back up alarm H2
    - Must be enabled in configuration menu
    - Throttle command <0%
  - Headlights LP1 and LP2
    - Headlight option set to “Yes” in configuration menu
    - Always active
    - Follows headlight membrane switch input
      - Will start out “on” if Headlights set to “on” In the options menus
- **Drive Controller outputs**
  - Drive wheel motor
    - No “interlock” message from the main controller on the CAN bus (only active during auto disc brush install mode)

Control Panel

The control panel (display) is an integral component with the Main Machine Controller circuit board. The control panel contains an LCD display, SmartKey reader for the keyswitch, and a series of membrane switches for operator control.

SmartKey Reader (A): The key reader provides a serial connection between the SmartKey and the main machine controller. The controller checks the serial number of the key to determine if it is authorized to enable the machine's operation.

Different keys (operator-blue versus supervisor-yellow) have different levels of access to the control system. Operator keys can be authorized/de-authorized for the machine, so that each operator may have his or her own uniquely identified key.

Power Switch (B): When a key is in the key reader, pressing the power button will boot up the controller and turn the machine on. Pressing and holding the button for at least 1/2 second will turn the machine off.

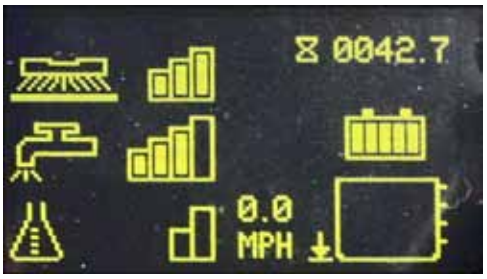

Display (C): The LCD display provides feedback to the operator with various text messages and graphic icons. The main screen shows scrub pressure, solution flow, detergent flow, speed, machine hours, battery charge level, solution tank level, and any fault codes. The display will change as necessary to convey the appropriate information.

Information (D) and Menu Navigation (E): Pressing the information switch enters or exits the system menus. The navigation switches provide navigation and entry for the menus, and will be discussed in greater detail in "Programming Menu Outline" on page 27.

One-Touch Scrub (F): When the One-Touch Scrub is selected, the brushes and squeegee are lowered to the floor, and the solution solenoid is briefly activated to pre-wet the brushes. The scrub, solution, vacuum and detergent (EcoFlex models) systems are all enabled and will start when the Drive Pedal is activated.

Solution Switch (G): The solution switch enables or disables the solution solenoid. However, the solution solenoid isn't energized unless the scrub system is engaged and the machine is in motion.

Vacuum Switch (H): The vacuum switch turns the vacuum on and off, and automatically lowers or raises the squeegee. Because a hand operated vacuum wand is available as an option, the vacuum will operate even when the operator is not in the seat and the seat switch is closed.

Speed Limit Switch (I): The speed limit switch sets the maximum speed of the machine to whatever the current speed is in scrub mode to reduce driver fatigue. Allows full pedal deflection at the set speed.

Detergent Switch (J): The detergent switch enables or disables the optional detergent pumps. However, the detergent pumps aren't energized unless the solution system is also active, and the machine is in motion.

Headlight Switch (K): The headlight switch controls the optional headlights on the front of the machine.

Brush Install Switch (L): The brush install switch lowers the deck and spins the brush motors briefly to aid in the installation of the brushes.

Dust Guard Switch (M): The side sweep switch controls the optional side sweep broom and optional dust control pump and solenoid. However, the side sweep system won't be active unless the broom is lowered (proximity sensor closed) and the scrub system is active.

CAN Bus Communication

CAN Bus communication was originally created for the automotive industry to allow distributed modules (Nodes) throughout the vehicle to communicate with each other over a single serial channel without any single Node being the Master of the communication channel. This means that each module broadcasts what it has to say, and all other modules on the CAN Bus see the message, but pay attention only to those messages they need to know about.

The CAN bus is a twisted-pair of wires running between all of the modules, with one wire being low and the other wire high, voltage-wise. To send a data bit, the module pulls the high and low wires apart, voltage-wise. All of the other modules monitor this to detect a communication message, which is a string of low and high binary pulses. However, the binary logic states are reverse of typical, in that a logic-1 is recessive, and the difference between CAN_H and CAN_L is low (near zero). A logic-0 is the dominant bit, and the difference between CAN_H and CAN_L is high (approximately 2.5 volts).

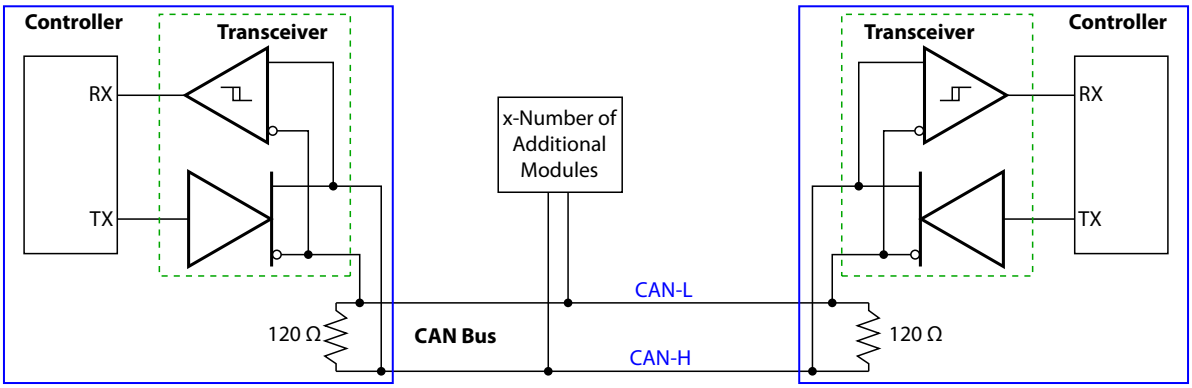

Because none of the modules represent the Master of the bus system, any of the modules can initiate a bus transmission any time there is not already traffic on the bus. When the module detects inactivity on the bus, it transmits a dominate bit, and begins sending the message priority level bits. But at the same time, it is also monitoring the bus itself to detect if a higher priority message was being initiated at the same time. The message with the higher priority level will have the bus high for the longest period, and therefore, that module knows that it is sending the highest priority message. The other module ceases its transmission and waits until the bus is available again.

Most CAN Bus messages originate from the Main Controller, or in response to a request from the Main Controller. However, each module can send any emergency messages at any time. Below are typical message sequences for the SC6000 machine.

- Every 250ms, the Main Controller broadcasts the PWM Requested values for the Right Brush, Squeegee Actuator, Deck Actuator, and Option Pump.
  - In response, the Power Module broadcasts the actual current flow for each of the above motors.
- Every 250ms, the Main Controller broadcasts the PWM Requested values for the Left Brush, Side Sweep, Vacuum 1, and Vacuum 2.
  - In response, the Power Module broadcasts the actual current flow for each of the above motors.
- Every 500ms, the Main Controller requests the actual (output) PWM for each of the motors listed above.
  - In response, the Power Module broadcasts the actual PWM for each of the above motors.
- Every 100ms, the Main Controller broadcasts drive enable and speed limit messages, and a request for drive status.
  - In response, the Drive Module broadcasts the vehicle speed, motor temperature, motor RPM, throttle command, throttle pot voltage, and motor current.
- Every 200ms, the Main Controller requests various Drive Controller parameters.
  - In response, the Drive Module broadcasts interlock, E-stop, phase A and B encoder position, drive controller temperature, and temperature cutback %.

Component Locations

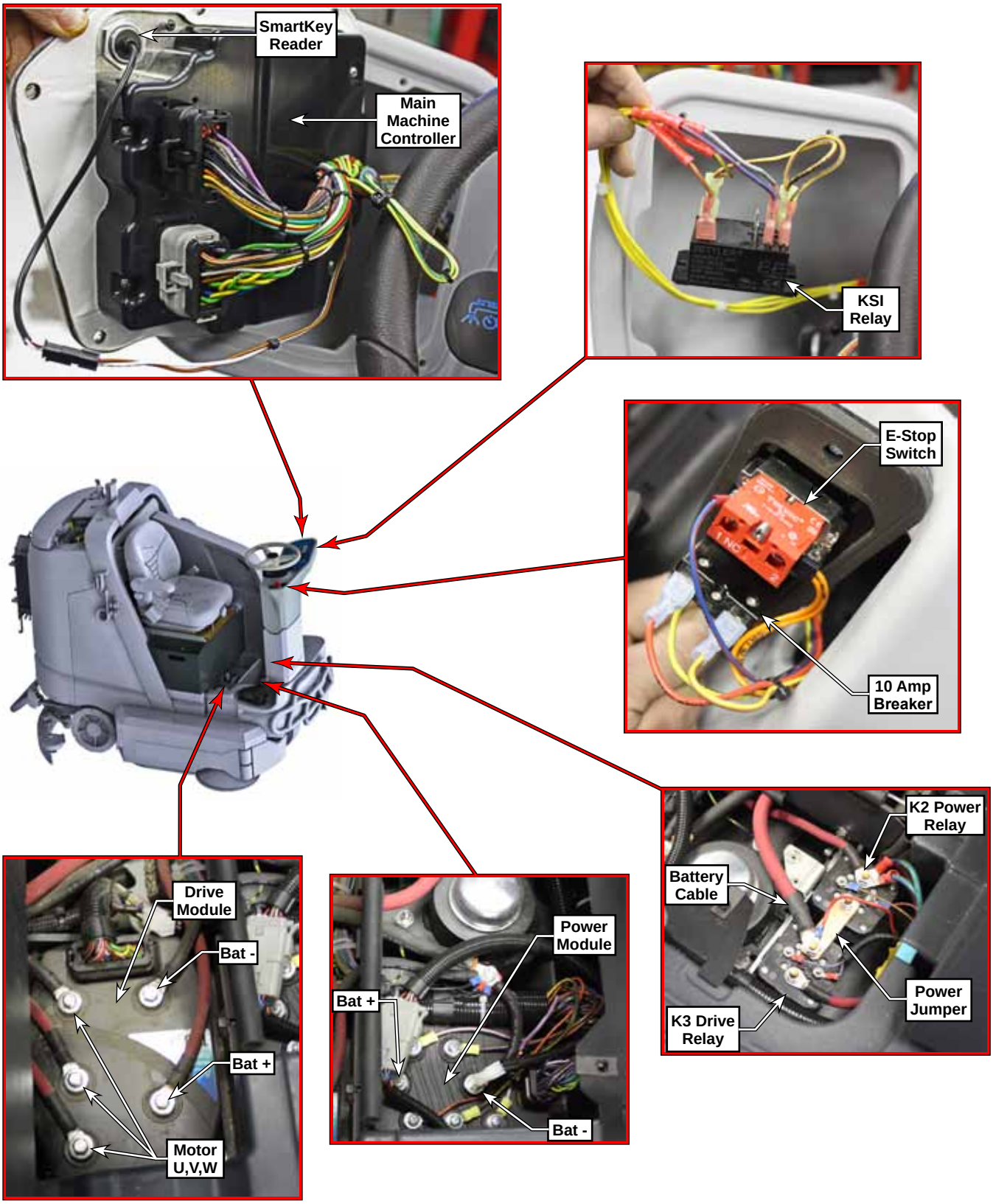

Main Machine Controller Programming

The Main Machine Controller is programmable for machine specific functions and configurations through a text menu system. Various parts of the menu system are hidden, depending on the user level access: User, Supervisor, Technician. The User-level access is limited to just reading operational parameters. The Supervisor-level access is permitted to program keys and access the Options menus. The Technician-level (Service Mode) permits access to the whole menu system.

Service Mode Access

Placing the machine into Service Mode is required to gain full access to the configuration system. Depending on the machine type, there are a couple of variations for access. Start with the machine powered off.

- If you have a TrackClean technician key, this will provide Service Mode access on any SC6000 machine by simply holding the key on the key reader and pressing the power button. This key is non-magnetic, so you need to hold it in place until the machine starts up, and then can remove the key.
- For a Nilfisk branded machine, place a user or supervisor SmartKey in the key reader, and then simultaneously press the Scrub, Vacuum, and Power switches to turn the machine on in service mode.
- For an Advance branded machine, a SmartKey is not required. Simultaneously press the Scrub, Vacuum, and Power switches to turn the machine on in service mode.

Menu Navigation

The menu system is accessed by pressing the Information switch **(A)**. The LCD display will show the text-based menu system. Pressing the Information switch again, exits the menu system. Refer to "Programming Menu Outline" on page 27.

- The Up and Down arrows **(B)** scroll through the menu listings. Within a configuration setting, the Up and Down arrows also scroll through the list of configuration choices.
- The Cursor arrow **(E)** signifies the current cursor position.
- The right arrow **(C)** will enter the currently identified submenu. Within a configuration setting, pressing the right arrow accepts that selection and exits back to the previous menu.
- The left arrow **(D)** backs out of any submenu to the previous menu. Within a configuration setting, pressing the left arrow cancels the selection, and exits without saving.

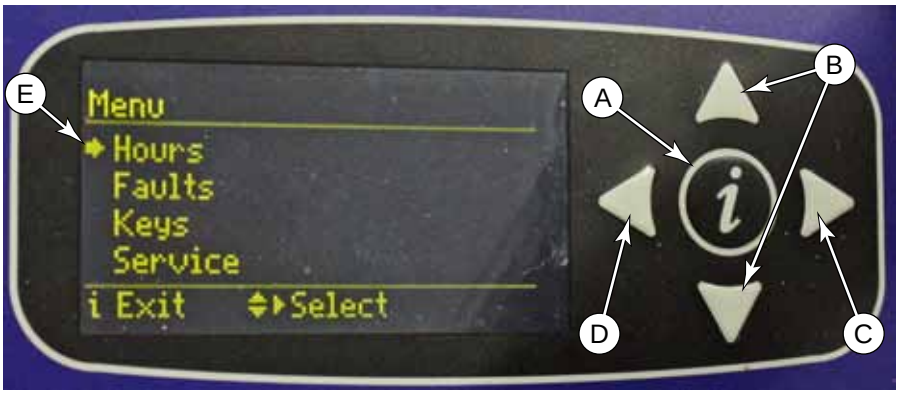

Programming Menu Outline

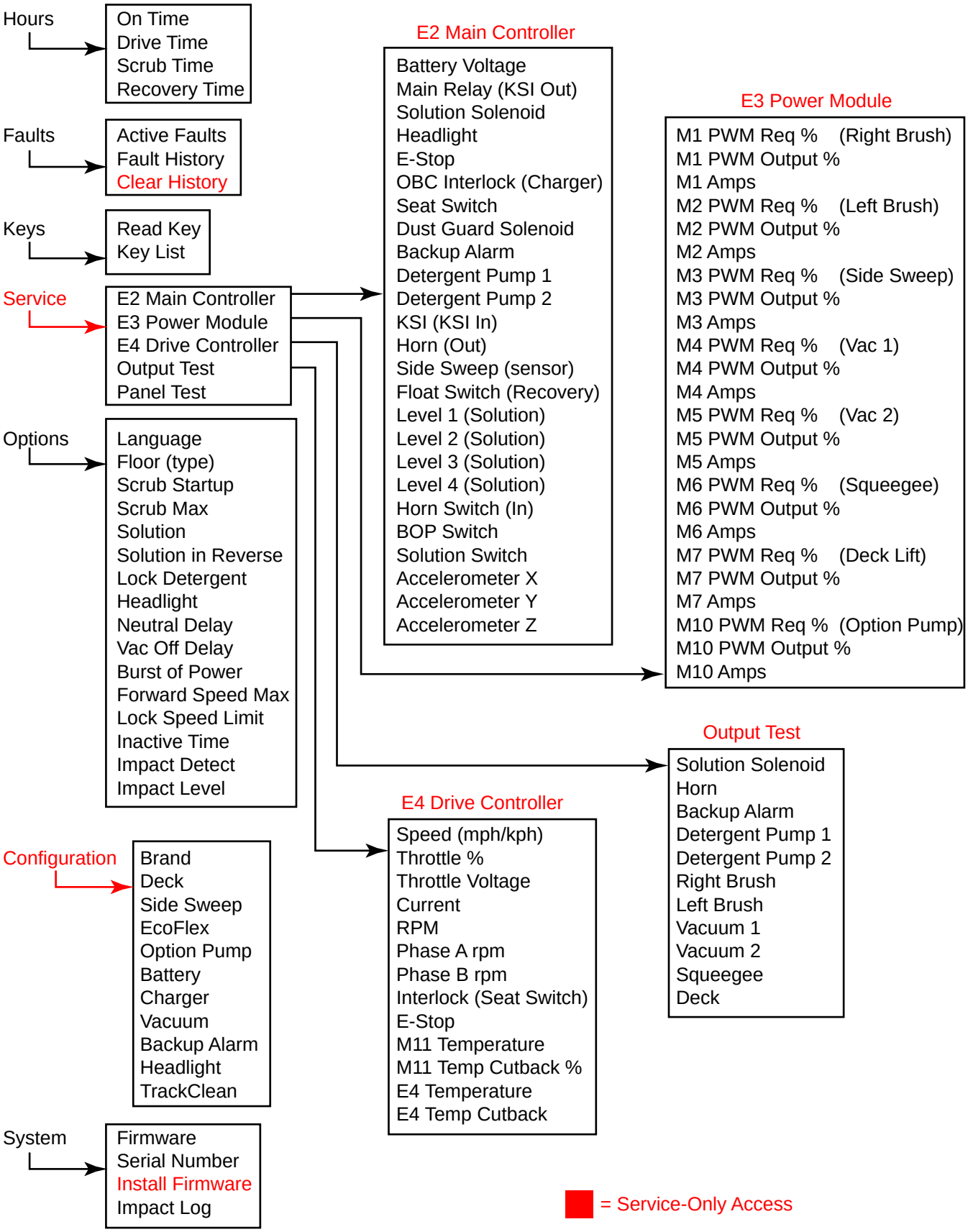

Hours Menu

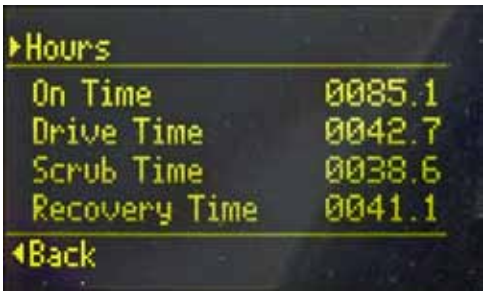

The hours menu displays the amount of time the machine has been active in each of the listed categories. The On Time represents the total time that the machine has been powered up, regardless whether it was active or sitting neutral. The remaining times indicate how long the machine was active and performing the specific functions. This information can be helpful when determining which preventive maintenance tasks are due to be performed.

Faults Menu

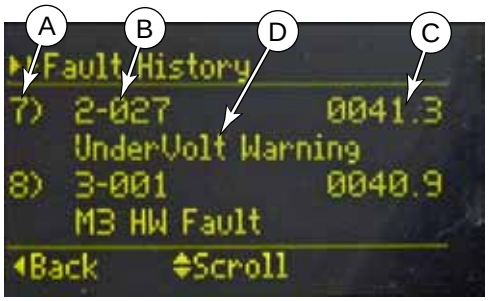

The faults menu lists the active or past machine faults. This can be helpful for troubleshooting, or for predicting a pending component failure. For example, if a motor has a history of increasingly frequent over-current errors, it may be a sign of a pending motor failure.

The information displayed is: **(A)** Fault occurrence number, **(B)** Error Code, **(C)** Drive-Time Hour Meter when the fault occurred, and **(D)** Error Description.

The fault history can also be cleared (available only to the technician in Service Mode). This should be done only if all past faults are accounted for or diagnosed.

Keys Menu

The Keys menu displays information about the current key, and also permits the addition or deletion of authorized user keys. User level keys (blue keys) can be authorized or de-authorized to operate the machine. However, if no keys have been authorized, then all user keys will be accepted.

Every key has a Hard-coded ID number (HID). This is the serial number for the key, and is also imprinted on the back of the key. Supervisor level keys also contain a Soft-coded ID number (SID), which determines the key type.

Authorizing User Keys

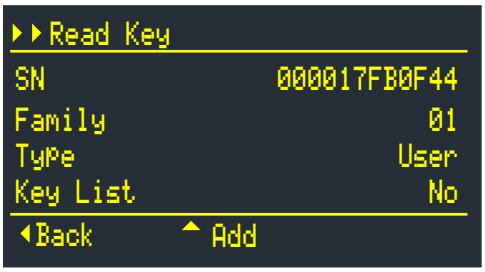

1. Start the machine with a supervisor key or in service mode.
2. Go to the Keys/Read Key menu function.
3. Replace the key with a user-level key to be programmed.
4. Press the Up arrow switch to add the key, and then the Right arrow switch to save.

Deauthorizing User Keys

1. Start the machine with a supervisor key or in service mode.
2. Go to the Keys/List Keys menu function.
3. Scroll to the key to be deleted in the list, and press the Right arrow switch to select it.
4. Press the Up arrow switch to delete the key, and then the Right arrow switch to save.
   - If all user keys are removed from the list, then any user key will be authorized to start the machine.

Service Menu

The Service menu provides access to diagnostic tools for troubleshooting the machine. Except for the Panel Test, each of these entries brings up a submenu for the applicable system module or function. To aid in navigating this information, these submenus are hyperlinked below:

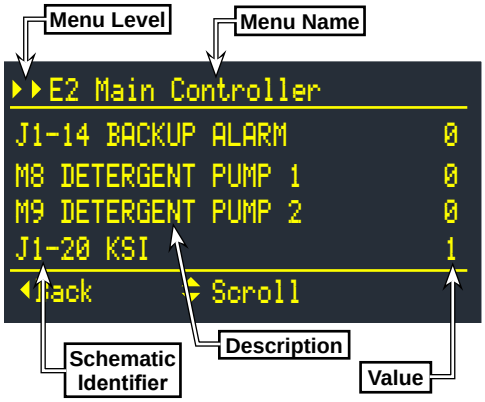

- "E2 Main Controller" on page 29
- "E3 Power Module" on page 30
- "E4 Drive Controller" on page 31
- "Output Test" on page 32
- "Panel Test" on page 34

E2 Main Controller

In addition to communicating with the other machine controllers, the main controller includes some direct input and output functions for sensors and low-power devices. This menu displays the status of the various input and output signals.

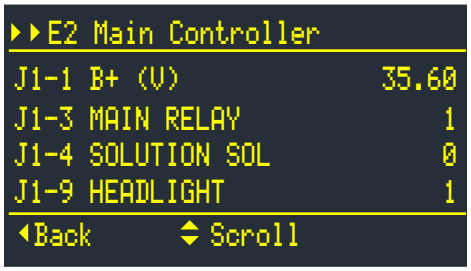

Battery Voltage: This shows the actual battery voltage as seen by the Main Controller. This voltage should be slightly less than the actual battery voltage as measured at the batteries due to minor voltage drop in the wiring to the control panel.

Main Relay (KSI Out): This is an output indicator for the KSI relay, which is controlled by the Main Controller. This signifies that the controller is commanding the KSI relay to close.

Solution Solenoid: This is the output indicator for the solution solenoid. It signifies that the controller is commanding the solenoid to be active.

Headlight: This is an output indicator to signify when the headlight output is active.

Emergency SW (E-Stop): This is the input signal from the E-stop switch. The E-stop switch is active-open (i.e. normally closed), so this input should normally be a "1" unless the E-stop button is depressed.

OBC Interlock (Charger): This is the input from the Onboard charger, if present. When the charger is not installed, this input is always zero, and ignored by the controller. However, when the charger is installed, a zero indicates the charger is plugged in, and the system should be disabled.

Seat Switch: This is the input from the operator's seat switch to verify the operator is in position to operate the machine. The switch is closed when the operator is seated.

Dust Guard Solenoid: This is the output to the optional Dust Guard misting solenoid.

Backup Alarm: This is the output to the optional backup alarm.

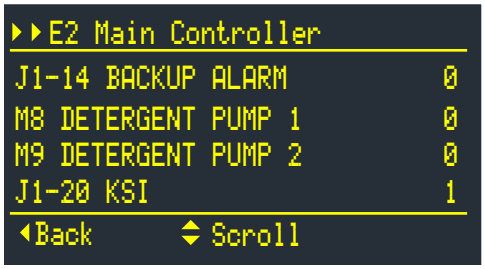

Detergent Pump 1 and 2: These two entries are the outputs to the two optional detergent pumps.

KSI (KSI In): This is a confirmation input from the KSI relay, so that the controller knows that the relay is active when commanded. This input also provides additional battery power for the higher power outputs from the controller.

Horn (Out): This is the output to the horn.

Float Switch (Recovery): This is the float switch in the recovery tank that closes when the tank is full.

Side Sweep (sensor): This is the input from the proximity sensor for the optional side broom. When the side broom is in the up-position, the sensor is active.

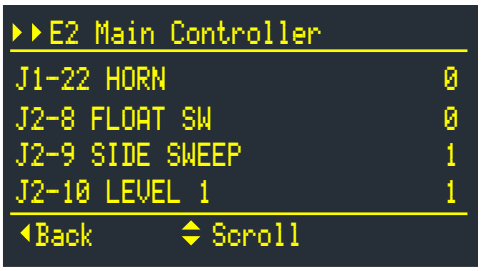

Solution Level Sensors 1, 2, 3, 4: These are the 4 inputs from the solution tank level sensors. The sensors are normally closed, so they open as the solution level rises.

Horn Switch (In): This is the input from the horn switch on the operator's steering column.

BOP Switch: This is the input from the Burst of Power switch on the operator's steering column.

Solution Switch: This is the input from the solution switch on the operator's steering column.

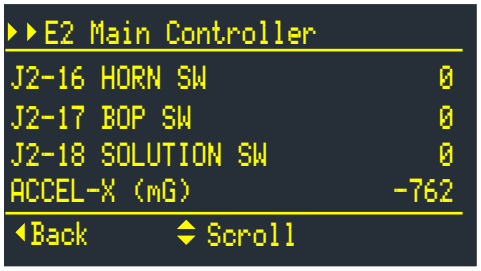

Accelerometer X, Y, Z: These 3 inputs are from the machine's accelerometers for X, Y, and Z directions. These are used to sense machine movement and also register machine impacts. The units are 1/1000 G-force.

E3 Power Module

The Power Module menu provides information regarding all of the motors which are driven by the power module. The list of information for each motor is as follows:

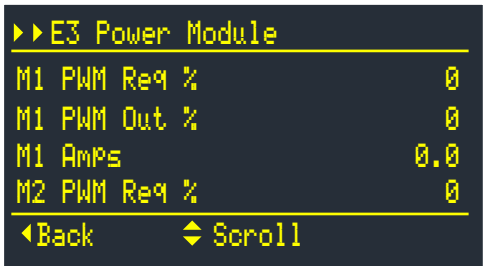

- **Requested PWM %:** This is the value (by percent) that the power module has been instructed to apply to the particular motor.
- **Output PWM %:** This is the actual output PWM value (in percent) that the power module is sending to the motor. When a motor is first started, its PWM out will be less than the requested PWM, as the motor speed is gradually increased.
- **Output Amps:** This is the actual amperage the power module is recording for the particular motor.

The motors are referenced by number. The actual motors are listed below:

M1 = Right Brush

M2 = Left Brush

M3 = Side Sweep

M4 = Vacuum 1

M5 = Vacuum 2

M6 = Squeegee Lift Actuator

M7 = Deck Lift Actuator

M10 = Option Pump

E4 Drive Controller

The Drive Controller menu provides status information about the drive motor and the drive controller itself. A brief summary of each listing is described below.

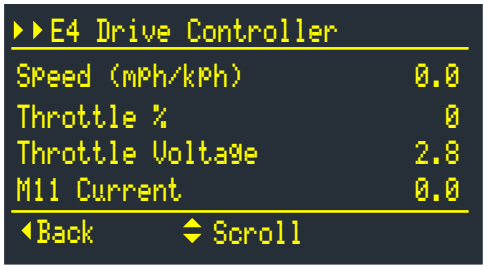

Speed (mph/kph): This displays the actual speed of the machine.

Throttle %: This displays the throttle position as percent of maximum position.

Throttle Voltage: This displays the wiper voltage from the throttle potentiometer.

Current: This displays the net amperage to the drive motor.

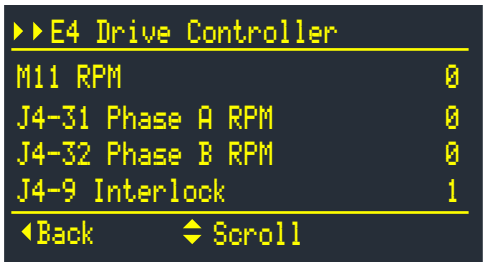

RPM: This displays the output rpm of the wheel motor.

Phase A and B rpm: These are the effective rpm's of the A and B phase encoders within the wheel motor. They represent the frequency of the PWM signal.

Interlock (Seat Switch): This represents the status of the seat switch. A value of "1" indicates the switch is closed and the operator is seated.

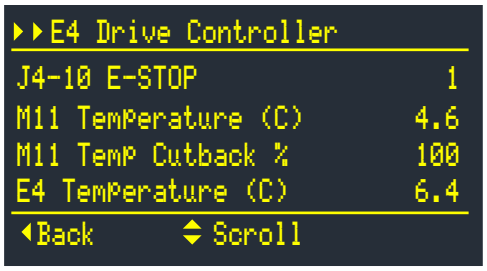

E-Stop: This represents the E-stop switch. A value of "1" indicates the E-stop switch is not pushed down.

M11 Temperature: This represents the internal temperature (˚C) of the wheel motor. The motor has an internal temperature sensor and reports this value to the Drive Controller.

M11 Temp Cutback %: This represents the percentage of power available to the motor when reduced due to an over-temperature condition within the motor, to protect the motor.

E4 Temperature: This represents the internal temperature (˚C) of the drive controller itself.

E4 Temp Cutback %: This represents the percentage of power available to the motor when reduced due to an over-temperature condition within the Drive Controller, to protect the controller.

Output Test

The Output Test menu provides manual control of various system functions for troubleshooting purposes. This permits devices to be operated even when prerequisite conditions are not met, such as permitting the solution solenoid to be active without the scrub system active. In addition to output control, each selection also provides status information for the particular device.

Solution Solenoid

The solution solenoid output test is a simple On/Off control for the solution solenoid. The solution solenoid is always connected to Bat+, and the Main Controller switches the Bat- connection to activate the solenoid. The second line of the screen provides a confirmation that the output is active.

```
▸▸Output Test
L1 SOLUTION SOL        On
J1-4 SOULUTION SOL      1

◂Back      ⬍ Set
```

Horn

The horn output test is a simple On/Off control for the horn. The horn is always connected to Bat+, and the Main Controller switches the Bat- connection to activate the horn. The second line of the screen provides a confirmation that the output is active.

```
▸▸Output Test
H1 HORN                On
J1-22 HORN              1

◂Back      ⬍ Set
```

Backup Alarm (Optional)

The backup alarm output test is a simple On/Off control for the optional backup alarm. If present, the backup alarm is always connected to Bat+, and the Main Controller switches the Bat- connection to activate the alarm. The second line of the screen provides a confirmation that the output is active.

```
▸▸Output Test
H2 BACKUP ALARM        On
J1-14 BACKUP ALARM      1

◂Back      ⬍ Set
```

Detergent Pump 1 and 2 (Optional)

These two screens allow bidirectional control of the two optional detergent pump solenoids (located under the operator's seat). Pressing the Up/Down arrow buttons select Off, A, or B. The status of the two output lines are shown below that, and will be either 12V or GND.

```
▸▸Output Test
M8 DETERGENT PUMP 1    Off
J1-16 PUMP 1A          12V
J1-17 PUMP 1B          12V

◂Back      ⬍ Set
```

Each detergent pump uses a DC solenoid to drive a diaphragm in and out. The A-polarity retracts the solenoid plunger, which is the intake stroke. The B-polarity extends the plunger, which is the pumping stroke. However, when the solenoid is off, the internal return spring also extends the plunger, just like "B". Therefore, slowly switching between Off and B will appear as though the solenoid is not physically doing anything. (Refer to the "EcoFlex Option" on page 85 for a further explanation of this.)

```
▸▸Output Test
M8 DETERGENT PUMP 1     B
J1-16 PUMP 1A          GND
J1-17 PUMP 1B          12V

◂Back      ⬍ Set
```

The outputs from the Main Controller can be either 12V or GND. So to turn the solenoid off, both outputs are set to 12V, which results in zero volts across the coil. To retract the solenoid, the controller positively biases the solenoid (A-direction). To actively extend the solenoid, the controller reverse biases the solenoid (B-direction).

Right and Left Brush

These two screens allow On/Off control of the brush motors. The additional 3 lines provide status on the motor. The Output Module provides soft-start control to the motor. The first screen capture to the right shows the motor status during the soft-start phase, and the second screen capture shows the steady-state status.

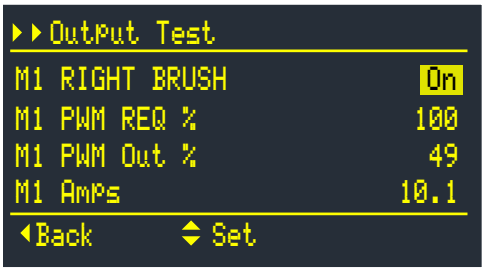

Note how the Main Controller's requested PWM is 100%, but during startup, the actual output PWM ramps upward until it reaches 100%. Also note that the startup current is very high while the motor is increasing its speed, and then tapers off to a lower level once the motor is at-speed. (The deck is raised in this example, so the motor is not under load.)

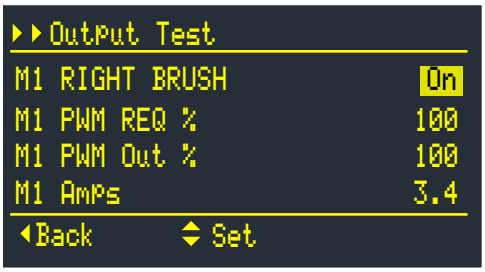

Vacuum 1 and 2

These two screens provide Off/On power control to the main vacuum and optional second vacuum motors. Pressing the Up/Down arrow buttons cycle through the power options.

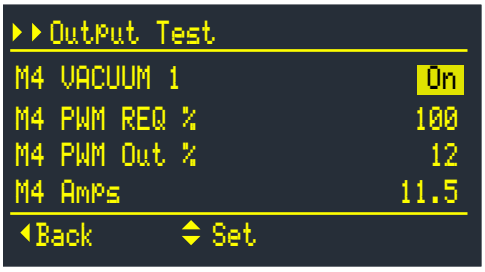

The soft-startup of the motors is similar to what was described above for the brush motors. The startup and operation of vacuum motors is slightly different from other motors. They start up with minimal resistance, but the load increases as the motor approaches operating speed. Because the squeegee was raised for this example, the vacuum motor will be operating at maximum load because the inlet air flow is unrestricted. Blocking the vacuum inlet actually reduces the load on the motor.

Squeegee Lift

The Squeegee Lift screen provides Up/Down/Off control for the squeegee lift actuator. However, the actuator still controls the upper and lower position limits mechanically, inside the actuator body. Therefore, if the squeegee is already raised and you issue the UP command, the actuator still will not move, because the mechanical limit is already reached. Another effect that you may notice is that the Output PWM will remain at 100%, but when the lift reaches its limit, the current drops to zero.

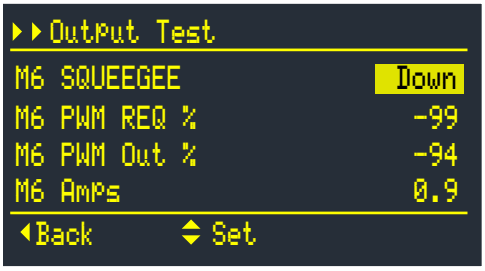

Deck Lift

The Deck Lift screen provides Up/Down/Off control for the deck lift actuator. However, the actuator still controls the upper and lower position limits mechanically, inside the actuator body. Therefore, if the deck is already raised and you issue the UP command, the actuator still will not move, because the mechanical limit is already reached. Another effect that you may notice is that the Output PWM will remain at 100%, but when the lift reaches its limit, the current drops to zero.

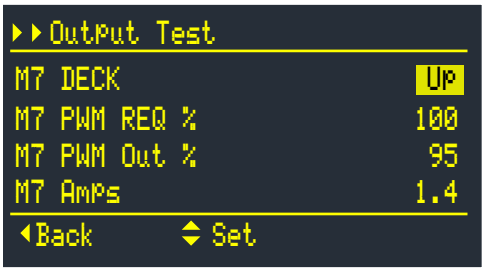

Panel Test

The Panel Test screen provides a means to verify the functionality of all of the control panel switches, LEDs, and display pixels.

The display shows a graphical representation of all of the control panel switches. When you depress a switch **(A)**, its representation on the screen highlights **(B)** to show the press was detected.

Pressing the Down Arrow **(C)** turns on all of the panel LEDs to verify that they are functional.

Pressing the Up Arrow **(D)** will turn on (scroll) through all pixels on the display screen to detect if any pixels are dropping out.

The Left Arrow **(E)** returns to the previous menu, and the Information button **(F)** exits the menu system.

Options Menu

The Options Menu provides for making machine settings specific for the uses and needs of the operator. This menu is also available to the Supervisor, but not to the operator.

Language: This sets the interface language For the machine. The available languages are: Español, Français, Deutsch, English, Italiano, and Português

Floor: This sets the floor type for either standard or smooth.

Scrub Startup: This sets the scrub mode default at startup. The choices are Light, Heavy, Extreme, and Last. (Last means that whichever mode was selected during the previous session will remain for the next session.)

Scrub Max: This sets the maximum permitted scrub level that the operator can select, and locks out any levels above that. The choices are Light, Heavy, and Extreme.

Solution: This sets the mode for solution rate. The choices are Proportional, Fixed, and UK.

Solution In Rev: This sets whether solution will flow when the machine is in reverse.

Lock Detergent: This sets whether the operator can adjust the detergent ratio.

Headlight: This sets whether the optional headlights are automatically turned on at startup.

Neutral Delay (s): This sets how long the brushes remain active (in seconds) when the machine is stationary. The minimum is 1/2 second, the maximum is 5 seconds, and the increment is every 1/2 second.

Vac Off Delay (s): This sets the length of time (in seconds) that the vacuum motor will continue to run after the squeegee is lifted (to clear the hose of remaining water). The minimum is 10 seconds, the maximum is 20 seconds, and the increment is every 1 second.

Burst Of Power (s): This sets the length of time (in seconds) Burst of Power remains active after pulling the BoP paddle. The minimum is 60 seconds, the maximum is 300 seconds (5 minutes), and the increment is every 60 seconds (1 minute).

Fwd Speed Max (%): This sets the maximum speed (percent of maximum) the operator can propel the machine forward. The minimum is 50%, the maximum is 100%, and the increment is every 10%.

Lock Speed Limit: This sets whether the operator can use the “set max speed” feature.

Inactivity Time (min): This sets the length of time (in minutes) before the machine powers down after inactivity. The minimum is 1 minute, the maximum is 30 minutes, and the increment is every minute.

Impact Detect: This sets how the machine handles impact detection. The choices are Off, record to log, and lockout the machine.

Impact Level: This sets the threshold for impact detection. The choices are high and low.

Configuration Menu

The configuration menu provides technician-only access to configure the machine based on which options are installed. If you install an option to a customer’s machine, you will need to configure the controller to specify that the option is installed, or the option may not function. Additional information is contained in the instruction sheets that accompany the option kits.

Brand: This sets the branding of the machine (Nilfisk or Advance). This should never be changed unless you are replacing the main controller.

Deck: This sets the deck type installed on the machine. The options are (Advance/Nilfisk) 34D/860D, 40D/1050D, and 36C/910C.

Side Broom: This sets whether the optional side broom is installed. This option is available only for 36C/910C machines. If the side broom kit also includes Dust Guard, you will also need to set the option pump type too.

Ecoflex: This sets whether the EcoFlex detergent pump system is installed.

Opt Pump: This sets whether the option pump is installed, and which of the two choices are used. The choices are None, Spray Wash, and Dust Guard. Note that the same machine cannot have both the spray hose and Dust Guard options installed.

Battery: This sets the battery type for the purpose of battery voltage monitoring. The choices are Wet and AGM. The battery types will have slightly different voltage levels during their discharge cycles.

Charger: This sets whether the onboard battery charger is installed. Note that if you set this to Yes, but no charger is installed, the machine will be disabled. Likewise, setting this to No when a charger is installed, can result in damage to the charger. Refer to the Troubleshooting section, “Onboard Charger Interlock” on page 67 for steps to

Vacuum: This sets whether there is 1 vacuum motor or 2 vacuum motors.

Backup Alarm: This sets whether the backup alarm is installed.

Headlight: This sets whether the headlights are installed.

TrackClean: This sets whether the TrackClean module is installed.

System Menu

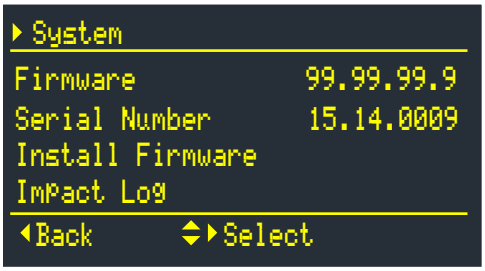

The system menu displays the firmware revision number and the serial number of the control board. It also provides access for updating the firmware, and checking the impact log.

Impact Log

If an impact event occurs and the machine has been set up for the "lock out" option, a pad lock symbol is shown to the operator and scrubbing functions are inhibited. The machine can still be driven., but the machine must be powered on using a supervisor key to "reset" the lock out and restore scrubbing functions.

The impact log will display a list of impact events with an impact value of acceleration in 1/1000 G's (Gravity). If an individual impact event is viewed, all three axis of acceleration are displayed.

Troubleshooting Guide

Any error codes initiated by any module will be sent to the main controller via the CAN Bus, and shown on the display and recorded to the log. Each of these codes for the main controller and power module are listed in the tables below, along with some basic troubleshooting steps to help isolate the cause. The Drive Controller (E4) Error Codes are listed in the Wheel System, Traction chapter on page 50.

Main Controller (E2) Error Codes

Code	Description	Comments
1-001	K1 Coil Open	The controller has detected an open circuit to the KSI relay coil. The most likely cause is a loose wire.
1-002	K1 Coil Short	The controller has detected a short circuit to the KSI relay coil. Inspect the wires between the controller and the relay (also located in the steering column) for shorts. Otherwise, replace the relay.
1-003	K1 Contact Weld	The controller has detected that the KSI relay output power is active after the controller has de-energized the relay coil. • Disconnect the relay output wires. If the condition persists, then it is known to be a short in the wires. • If the condition clears after disconnecting the output wires, then it is known that the contacts have fused and the relay must be replaced.
1-010	CAN Bus 0	Fault with the main controller's CAN-0 bus (TrackClean)
1-011	CAN Bus 1	Fault with the main controller's CAN-1 bus (power module and drive controller)
1-101	L1 Short	The controller has detected a short at the Solution Solenoid. • The most likely cause is a damaged solenoid with an internal short. • Check the coil resistance of the solenoid. If it is significantly below the normal coil resistance of 108 Ω, then replace the solenoid.
1-102	L2 Short	The controller has detected a short at the optional Dust Guard Solenoid. • The most likely cause is a damaged solenoid with an internal short. • Check the coil resistance of the solenoid. If it is significantly below the normal coil resistance of 126 Ω, then replace the solenoid.

<table>
<tr><th>Code</th><th>Description</th><th>Comments</th></tr>
<tr><td>1-103</td><td>H2 Short</td><td>The controller has detected a short at the optional backup alarm (located above the squeegee).
• The most likely cause is a damaged coil with an internal short.
• Check the coil resistance of the horn. If it is significantly below the normal coil resistance of 5.8 Ω, then replace the horn.</td></tr>
<tr><td>1-104</td><td>LP1,2 Short</td><td>The controller has detected a short at the optional headlights (LP1 or LP2).
• The most likely cause is a short in the wires leading to the headlight due to chaffing or melting.
• Disconnect both headlights. If the condition clears, at least one of the headlights is faulty.</td></tr>
<tr><td>1-105</td><td>H1 Short</td><td>The controller has detected a short at the horn.
• The most likely cause is a damaged coil with an internal short.
• Check the coil resistance of the horn. If it is significantly below the normal coil resistance of 5.8 Ω, then replace the horn.</td></tr>
<tr><td>1-106</td><td>M8 Short</td><td rowspan="2">The controller has detected a short at one of the optional detergent pumps under the operator’s seat.
• The most likely cause is a loose wire at the pump touching the other terminal.
• Swap the pump wires (pump 1 for 2) according to the color codes below.
– If the controller thinks the same pump is faulty, then you know the short is in the wires.
– If the controller thinks the other pump is faulty, then you know that one of them is faulty. (disconnect each one to find out which one is faulty).
<table><tr><th></th><th>Positive</th><th>Negative</th></tr><tr><td>Pump 1</td><td>Green/Red</td><td>Orange/Gray</td></tr><tr><td>Pump 2</td><td>Blue/Yellow</td><td>Red/White</td></tr></table></td></tr>
<tr><td>1-107</td><td>M9 Short</td></tr>
<tr><td>1-201</td><td>Level Sensor</td><td>The controller has detected an abnormal condition from the 4 level sensors in the solution tank, such as a middle sensor indicating differently than adjacent sensors.</td></tr>
<tr><td>1-560</td><td>EEPROM Configuration</td><td>unable to read eeprom values - using default values</td></tr>
<tr><td>1-561</td><td>EEPROM Options</td><td>unable to read eeprom values - using default values</td></tr>
<tr><td>1-562</td><td>EEPROM Sys Values</td><td>unable to read eeprom values - using default values</td></tr>
<tr><td>1-563</td><td>EEPROM Fault Log</td><td>unable to read eeprom values - log cleared</td></tr>
<tr><td>1-564</td><td>EEPROM User Key List</td><td>unable to read eeprom values - list is cleared</td></tr>
<tr><td>1-565</td><td>EEPROM Impact Log</td><td>unable to read eeprom values - log cleared</td></tr>
</table>

Power Module (E3) Error Codes

Power module error codes will be displayed on the main display. However, the error number is also flashed on the two-color status LED on the module itself. The status LED has 2 colors; red and yellow. The red LED will flash out which digit of the code is coming next, and the yellow LED will flash out the value of that digit.

For example, to flash out an M4 Overload error with a code of 034, the red LED will flash once, followed by the yellow LED flashing 3 times. Then the red LED will flash twice, followed by the yellow LED flashing 4 times.

Code	Description	Comments
2-001	E3 Timeout	The power module is not sending heartbeat messages.
2-011	Precharge Fail	The capacitor bank failed to charge to the KSI voltage. The K2 relay will not be allowed to close.
2-012	K2 Overload	The current flow from the K2 relay is higher than the permitted set point.
2-013	K2 Contact Weld	The power module has detected that the K2 relay output power is active after the module has de-energized the relay coil. • Disconnect the small relay coil wires, and then check the output voltage with a voltmeter.
2-014	K2 Contact Open	The power module has detected that the K2 relay output power is absent when the coil is supposed to be energized. • Check the voltage at the coil wires. If battery voltage is present, then the relay has likely failed.
2-017	OverVolt Cutoff	The power module has detected and over-voltage condition in the capacitor bank and has shut down.
2-018	UnderVolt Cutoff	The power module has detected and under-voltage condition and has shut down all output and the K2 relay.
2-021	M1 Open	The power module has detected an open circuit to the respective motor. This could be the result of a disconnected wire at the motor or module, or it could be that the motor's brushes have worn beyond service. M1=Right Brush, M2=Left Brush, M3=Side Sweep, M4=Vac1, M5=Vac2
2-022	M2 Open	
2-023	M3 Open	
2-024	M4 Open	
2-025	M5 Open	
2-026	M6 Open	The power module has detected an open circuit to the squeegee (M6) or Deck (M7) lift actuators. • If no broken connection is located, this could also be caused from the limit cams inside the actuator to be misadjusted, which could prevent the actuator from being neither raised nor lowered.
2-027	M7 Open	
2-028	M10 Open	The power module has detected an open circuit to the option pump. This could be the result of a disconnected wire at the motor or module, or it could be that the motor's brushes have worn beyond service.
2-031	M1 Overload	The power module has detected the motor is operating above its established parameters. The most common cause for such an error is when the motor is experiencing an obstruction, binding, or under excessive load.
2-032	M2 Overload	
2-033	M3 Overload	
2-034	M4 Overload	
2-035	M5 Overload	
2-036	M6 Overload	
2-037	M7 Overload	
2-038	M10 Overload	

Code	Description	Comments
2-041	M1 Overcurrent	The power module has detected that the amperage to the associated motor is beyond the limits of the power module. Possible causes for this could be short circuit or locked motor rotor.
2-042	M2 Overcurrent	
2-043	M3 Overcurrent	
2-044	M4 Overcurrent	
2-045	M5 Overcurrent	
2-046	M6 Overcurrent	
2-047	M7 Overcurrent	
2-048	M10 Overcurrent	
2-051	M1 Mosfet Short	The power module has detected that the output switching transistor for the respective motor is not switching off when expected. If the condition persists, the likely cause is that the power module has failed and needs replacement.
2-052	M2 Mosfet Short	
2-053	M3 Mosfet Short	
2-054	M4 Mosfet Short	
2-055	M5 Mosfet Short	
2-056	M6 Mosfet Short	
2-057	M7 Mosfet Short	
2-058	M10 Mosfet Short	
2-061	M1 Current Sensor	The power module has detected unexpected results for the applicable output current sensor. If the motor appears to be operating correctly, the power module may be damaged.
2-062	M2 Current Sensor	
2-063	M3 Current Sensor	
2-064	M4 Current Sensor	
2-065	M5 Current Sensor	
2-066	OverTemp Cutoff	Internal temperature exceeds Cutoff Temperature
2-067	UnderTemp Cutoff	Internal temperature below -40°
2-071	M1 Overload Trip	An existing overload condition has continued for a preset time period and the power module has shut down the load.
2-072	M2 Overload Trip	
2-073	M3 Overload Trip	
2-074	M4 Overload Trip	
2-075	M5 Overload Trip	
2-076	M6 Stall	The motor current has exceeded the stall value. The motor will not be operated in the stalled direction until it is first operated in the opposite direction.
2-077	M7 Stall	
2-078	M10 Stall	
2-081	EEPROM Fault	EEPROM checksum error
2-082	PDO Timeout	Time between PDO messages exceeded PDO timeout.
2-083	CAN Bus	Internal CAN Bus counter exceeded 128
2-084	Actuator Timeout	Internal master does not receive the slave message in the timeout period.
2-086	OverTemp Cutback	Internal temperature exceeded the cutback temperature. The output current limits will be reduced.
2-087	UnderTemp Cutback	The internal temperature is below -25°C. Output power will be reduced to 50%.
2-088	K2 Coil Open	The module has detected an open circuit at the K2 relay coil.

Code	Description	Comments
2-091	M1 HW Fault	The power module's output is not working properly and all outputs are disabled and the K2 relay is opened.
2-092	M2 HW Fault	
2-093	M3 HW Fault	
2-094	M4 HW Fault	
2-095	M5 HW Fault	
2-096	Parameter Change	The module's output mode was improperly changed.
2-097	M6 Current Sensor	The current sensor has an invalid reading
2-098	M7 Current Sensor	
2-101	M10 Current Sensor	
2-102	Thermal Sensor	The thermal sensor has an invalid reading
2-103	K2 Coil Short	The module has detected a short to the K2 relay coil

Specifications

Sample Shop Voltage Measurements

The following tables contain some "real world" shop voltage measurements to help you recognize what "normal" looks like. All voltage values were measured with the black (Negative) voltmeter lead connected to the main battery negative unless otherwise specified. Most outputs were turned on using the Service/Output test function. Machine battery voltage at time of testing was 37.25V.

Main Control Board J1 Connector (Black)				
Pin	**Wire**	**Color**	**Circuit Description**	**Value/Condition**
1	Wl59	YEL-BRN	B+ power supply	37.23V Powered on
2	WIGO	YEL-BRN	B+ power supply	37.23V Powered on
3	WI 62	ORN-BRN	K1 KSI relay control	37.2V off 0.62V on
4	W163	GRY-BLK	L1 Solution solenoid control	37.16V off 0.08V on
5	W147	BLK	B- power supply	0.001V powered on
6	W146	BLK	B- power supply	0.001V powered on
7				
8				
9	W142	BLK	LP1 and LP2 Headlight control	37.16V off 0.08V on
10	W178	ORN	S2 Emergency switch input	37.1V on position 0.006V Emergency shut off position
11	W245	GRN	E1 Battery charger interlock power supply	37.16V charger NOT plugged into power 0.006V charger plugged into power
12	W175	GRN-BLU	S1 Seat switch input	37.18V operator on seat 0.175V operator off seat
13	W164	YEL-WHT	L2 DustGuard solenoid control	37.18V off 0.07V on

Main Control Board J1 Connector (Black)				
Pin	**Wire**	**Color**	**Circuit Description**	**Value/Condition**
14	W165	GRN-BRN	H2 Back-up alarm control	32.87V off 0.014V on
15				
16	W171	GRN-RED	M8 Detergent pump control + or -	12.4V off 11.5V A 0.38V B
17	W172	ORN-GRY	M8 Detergent pump control + or -	12.4V off 0.37V A 11.5V B
18	W173	BLU-YEL	M9 Detergent pump control + or -	12.4V off 11.5V A 0.38V B
19	W174	RED-WHT	M9 Detergent pump control + or -	12.4V off 0.38V A 11.5V B
20	W167	GRY	K1 KSI relay power supply	37.04V Relay energized 0.06V Relay off
21	W168	GRY	K1 KSI relay power supply	37.04V Relay energized 0.06V Relay off
22	W166	VIO-BRN	H1 Horn control	37.04V off 0.073V on
23				

Main Control Board J2 Connector (Gray)				
Pin	**Wire**	**Color**	**Circuit Description**	**Value/Condition**
1	W232	YEL	CAN 0 High	2.51V
2	W233	GRN	CAN 0 Low	2.51V
3				
4	W185	BRN	B- supply for A10 smart key reader	0.001V Powered on
5	W220	WHT	A10 Smart key reader input	3.4V Powered off or on with or without key present
6	W148	BLK	B- power supply	0.006V Powered on
7				
8	W191	WHT-ORN	S6 Recovery tank float switch input	4.83V Float down 0.001 Float up
9	W186	BLU-BRN	S8 Side sweep proximity switch input	4.81V Broom Down 0.001V Broom Up
10	W187	BLU	S7 Solution level sensor Lvl 1 input	4.83V Float down 0.001 Float up
11	W195	GRN	CAN 1 Low	2.446V
12	W192	YEL	CAN 1 High	2.578V
13	W188	WHT	S7 Solution level sensor Lvl 2 input	4.83V Float down 0.001 Float up

Main Control Board J2 Connector (Gray)				
Pin	**Wire**	**Color**	**Circuit Description**	**Value/Condition**
14	W189	YEL	S7 Solution level sensor Lvl 3 input	4.83V Float down 0.001 Float up
15	W190	RED	S7 Solution level sensor Lvl 4 input	4.83V Float down 0.001 Float up
16	W199	YEL-RED	S3 Horn switch input	4.8V at paddle at rest 0.001V paddle pulled back
17	W198	ORN-RED	S4 Burst of power switch input	4.8V at paddle at rest 0.001V paddle pulled back
18	W200	TAN-WHT	S5 Timed solution off switch input	4.8V at paddle at rest 0.001V paddle pulled back
19	W204	RED	USB VBus	5.00V
20	W203	WHT	USB DM	0.005V
21	W202	GRN	USB DP	0.005V
22				
23	W221	BLK	USB GND	0,001V

Power Module J3 connector				
Pin	**Wire**	**Color**	**Circuit Description**	**Value/Condition**
1	W013	ORN-GRY	M7 Deck actuator + or -	35.5V - up, 3.0V down
2	W019	BRN	K2 Power module relay coil control	36V momentarily at power up, then 11.4V
3	W196	GRN	CAN 1 Low	2.44V
4	W193	YEL	CAN 1 High	2.57V
5		BLU-PINK	+15V power output for Curtis programmer connector	
6	W014	BLU-GRA	M7 Deck actuator + or -	37.6V down, 0.07V up
7		GRN-VIO	Serial RX for Curtis programmer connector	
8		BLU-GRN	Serial TX for Curtis programmer connector	
9	W247	BLU-RED	Key Switch Input power supply (from K1 KSI relay)	37.66V when K1 is energized
10	W225	WHT-BLK	M10 Optional Pump + or -	35.6V on, 1.11V off
11	W170	BLU-ORN	M10 Optional Pump + or -	0.004V on, 1.11V off
12	W122	BLK	B- Power supply	1.1V no load or with vacuum on
13	W011	TAN-BLU	M6 Squeegee actuator + or _	34.5V up, 3.0V down
14	W010	BLK-GRA	M6 Squeegee actuator + or _	37.6V down, 0.05V up

Power Module Heavy Current Lugs	
Measured	**Value/Condition**
B+ lug to B- lug	36.5V (with Vacuum motor on 100%)
B+ lug to Battery Positive	0.031V (with Vacuum motor on 100%)
B- lug to Battery Negative	0.017V (with Vacuum motor on 100%)
M1 to Battery Negative	36.9V off 0.019 on at 100%
M2 to Battery Negative	36.9V off 0.018 on at 100%
M3 to Battery Negative	36.9V off 9.5V on at 76%
M4 to Battery Negative	36.7V off 0.081 on at 100%
M5 to Battery Negative	Not present, assume same as M4

Motor Amp Draw measurements

All motor amp draw measurements were done with no load (free running) using the Service/Output Test function and reading the amperage reported on the control panel display.

Motor	Amperage (On Display)
M1 Brush Motor (Cylindrical)	4.0A at 100%
M1 Brush Motor (Disc)	2.6-3.0A at 100%
M2 Brush Motor (Cylindrical)	4.0A at 100%
M2 Brush Motor (Disc)	2.6-3.0A at 100%
M3 Side Broom Motor	1.6A at 76%
M4 Vacuum Motor	18.1A at 100%
M5 Vacuum Motor (Optional)	Not measured
M6 Squeegee Actuator Motor	Up: 4.1A initial, then 2.6A Down: 0.9-1.2A
M7 Deck Actuator Motor	Up: 4.1A initial, then 2.6A Down: 0.9-1.2A
M10 Dust Guard Pump Motor	0.4-0.7A

Removal and Installation

Main Control Board

The main control board and the operator's display are integral components to one another and cannot be separated.

CAUTION: The control board is always receiving power, even when the machine is off. Make sure to disconnect the main battery connector before working on the control board.

1. If this procedure is being performed to replace a defective control board, and if that control board is functional enough to do so, go to the Options Menu and Configuration Menu and write down the existing parameters.
2. Turn the machine off and disconnect the main battery connector under the operator's seat.
3. Remove the 5 screws **(A)** that secure the control board to the steering column.
4. Lift the control board away from the steering column, taking care not to stress the wiring harness.

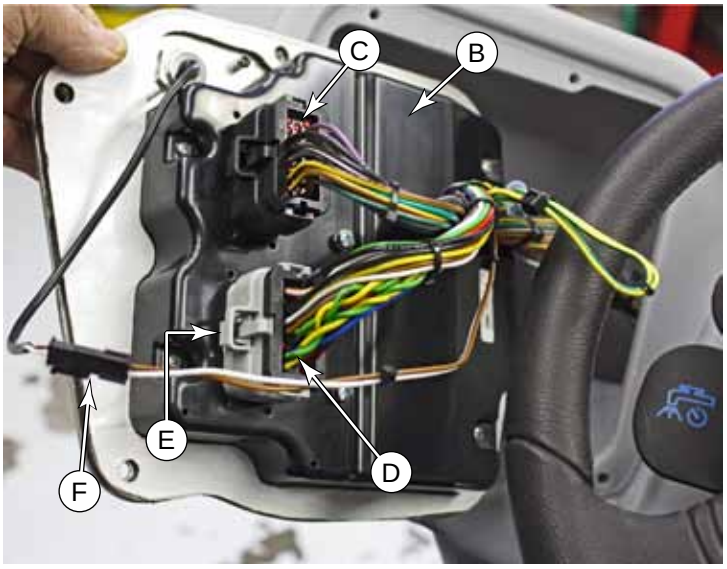

5. Remove the two main cable harness connectors **(C&D)** by gently pulling out on the release latch **(E)**.
6. You may optionally remove the KSI Relay described on page 45 from the control board, or disconnect the wire terminals from the relay, depending on the purpose of the procedure.
7. Disconnect the SmartKey reader connector **(F)**.
8. Remove the control board **(B)** from the machine.
9. After replacing the control board with a new one, restore the original machine settings in the Options Menu and Configuration Menu .
10. If available, re-authorize user level keys as described on page 28.

KSI Relay

The KSI relay is located on the back of the main control board. If the KSI relay fails, nearly all machine functionality will be disabled.

CAUTION: The control board is always receiving power, even when the machine is off. Make sure to disconnect the main battery connector before working on the control board.

1. Shut down the machine and disconnect the main battery connector under the operator's seat.
2. Remove the Main Control Board described on page 44, but it may not be necessary to disconnect the harness connectors if space permits.
3. Remove the two screws that secure the relay to the back of the controller, and free up the relay from the control board.
4. Before removing any wires, make note of which wires are connected to which terminal on the relay.
   - The two terminals separate from the others are for the relay coil. One terminal should have a Battery+ connection **(B)**, and the other should be connected to the main control board **(C)**.
   - The six grouped terminals are for the double-pole, double-throw contacts. The farthest terminals are connected to Battery+. The middle terminals are the main KSI output power wires.

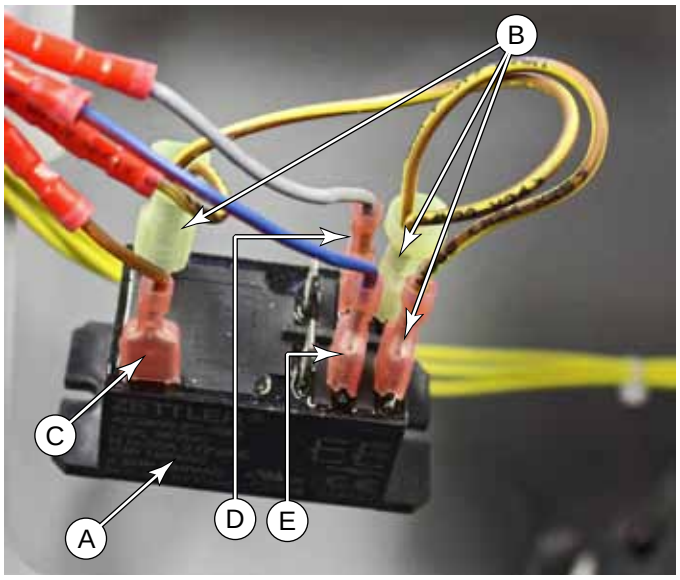

14 - Wheel System, Non-Traction

Functional Description

The non-traction wheels are intended to carry the majority of the machine's weight. The wheels are strategically located below the battery compartment and between the recovery and solution tanks. The non-traction wheels are mounted directly to the machine's subframe.

Removal and Installation

Rear Wheel Bearings and Seal

The rear wheel bearings are sealed and do not require lubrication. Severely worn bearings may be detected by wheel wobble or grinding sounds. A less obvious symptom of bearing failure is when the wheel easily freewheels when spun by hand with the machine elevated off the ground. A good sealed bearing should have a slight but smooth resistance to freewheel.

The wheel bearings are pressed into the wheel hub. To complete this procedure, you will need a bearing puller and a press. There are many different types of bearing pullers that will operate on the internal bore of a bearing (35mm in this case). As one example, a pilot bearing puller is shown to the right.

WARNING: Never work under a machine without safety stands or blocking to support the machine.

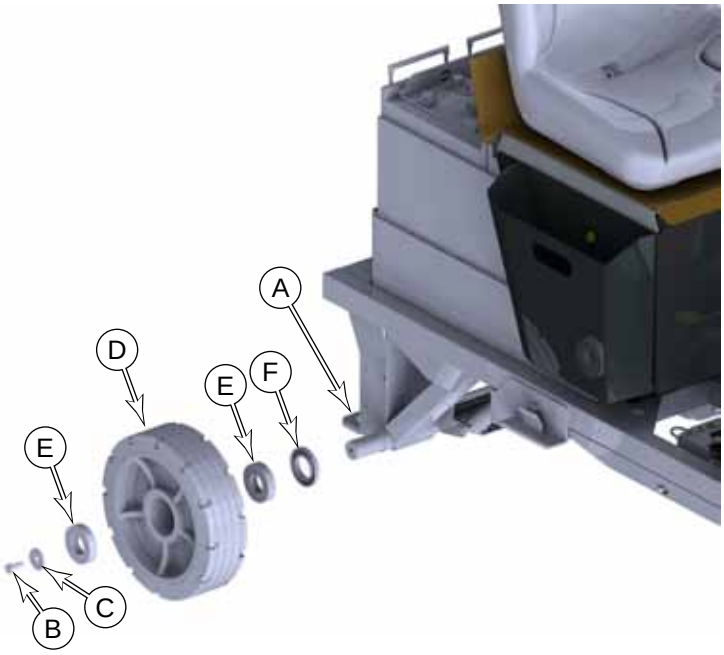

1. To reduce the weight of the machine, drain both the recovery and solution tanks.
2. Carefully pry off the wheel hub cover (not shown).
3. Jack the rear of the machine and block both sides of the machine at the rear lifting points **(A)** near the wheels to keep the machine stable and prevent it from rolling.
4. Remove the bolt **(B)** and washer **(C)** that secure the wheel to the axle, and remove the wheel.
5. Using a seal puller or similar means, pull the inboard seal **(F)** from the wheel hub.
   - The act of removing the seal will destroy the seal. You must replace the seal with a new one.
6. Using a suitable bearing puller, remove both the inboard and outboard bearings **(E)**.
7. Press new bearings into the hub. Make sure to press along the outer race (72mm Ø) to avoid damaging the bearing.
8. Press a new inboard seal into the hub, and apply a light film of grease to the seal lip.
9. Reinstall the wheel.

20 - Wheel System, Traction

Functional Description

The drive system of the SC6000 machine consists of a single drive wheel with an integral motor. The drive wheel connects to the subframe with a rotational bearing and flange to provide steering rotation.

Steering control is made through the steering column that passes through a universal joint to translate the rotation from the angled steering wheel to the vertical shaft and pinion sprocket. The pinion sprocket drives a chain that wraps around the steering sprocket. The steering sprocket has no chain teeth, but the chain is fixed to the sprocket at the ends of the chain using standard master links.

Drive Motor

The drive motor is a 3-phase, remotely commutated, AC induction motor; which is commonly referred to as a brushless DC motor. Even though it is an AC motor, it is powered from a controlled DC power source that simulates AC power. Each of the 3 motor windings is sequentially energized with either zero-volts, positive battery voltage, or inverted battery voltage. This creates a rotating magnetic field in the windings just like a normal 3-phase AC motor.

Unlike a normal AC motor that just receives blind AC power at a given frequency, the drive motor functions as a servo-motor, in that the motor provides positional feedback back to the motor driver for the actual rotor position. This is referred to as remotely commutated. Two encoders inside the motor report the actual rotational position of the rotor back to the controller. This permits the driver to know which of the 3 windings needs to be energized to rotate the motor in the desired direction, and even position. This type of motor can literally be rotated a fraction of a turn and stopped, if desired.

The motor also reports its operational temperature back to the motor driver. This is a protection feature to prevent motor damage due to excessive heat. The drive controller can either reduce power to the motor, or if severe enough, shut down the motor.

Drive Pedal Potentiometer

The drive pedal potentiometer (R1 pot) is a variable resistor connected to the Pin J4-16 input of the drive controller, with pins J4-15 and J4-18 as reference voltages. As the resistance changes, the drive controller increases or decreases drive motor speed.

The drive pedal is set up in what's called a wig-wag configuration, where drive direction is controlled by a single potentiometer. When the throttle potentiometer is in the center position, the wiper voltage is approximately 2.8 volts. The speed controller interprets any voltage between 2.3V and 3.3V as neutral and the output to the motor will be zero. Forward or Reverse movement of the drive pedal rotates the potentiometer shaft and the wiper voltage is increased for forward travel, or decreased for reverse travel. The magnitude of the voltage difference away from the neutral point also determines the speed that the motor will be driven.

To allow for minor variation in the pedal returning to the neutral position, the drive controller establishes a deadband around the 2.8-volt center. This results in a plus/minus range of voltages where the controller assumes the pedal is still in the neutral position. The deadband for this drive controller (2.3 to 3.3 V) is set in the machine's firmware, and is not adjustable.

Drive Controller

The KSI relay provides logic power to the drive controller. When the main machine controller is not energizing the KSI relay, the drive controller has no power. However, the drive controller has control of its own power relay **(K3)**. This provides separate high-current power output for the motor control. The drive controller also monitors the E-stop switch and seat switch, so that either one can disable the drive output. Output is disabled if either the seat switch or E-stop is open. The drive controller also receives many of its operating parameters from the main machine controller.

The motor contains an electromechanical brake, that releases only when power is present. The drive controller releases the brake when the wheel motor is commanded to turn.

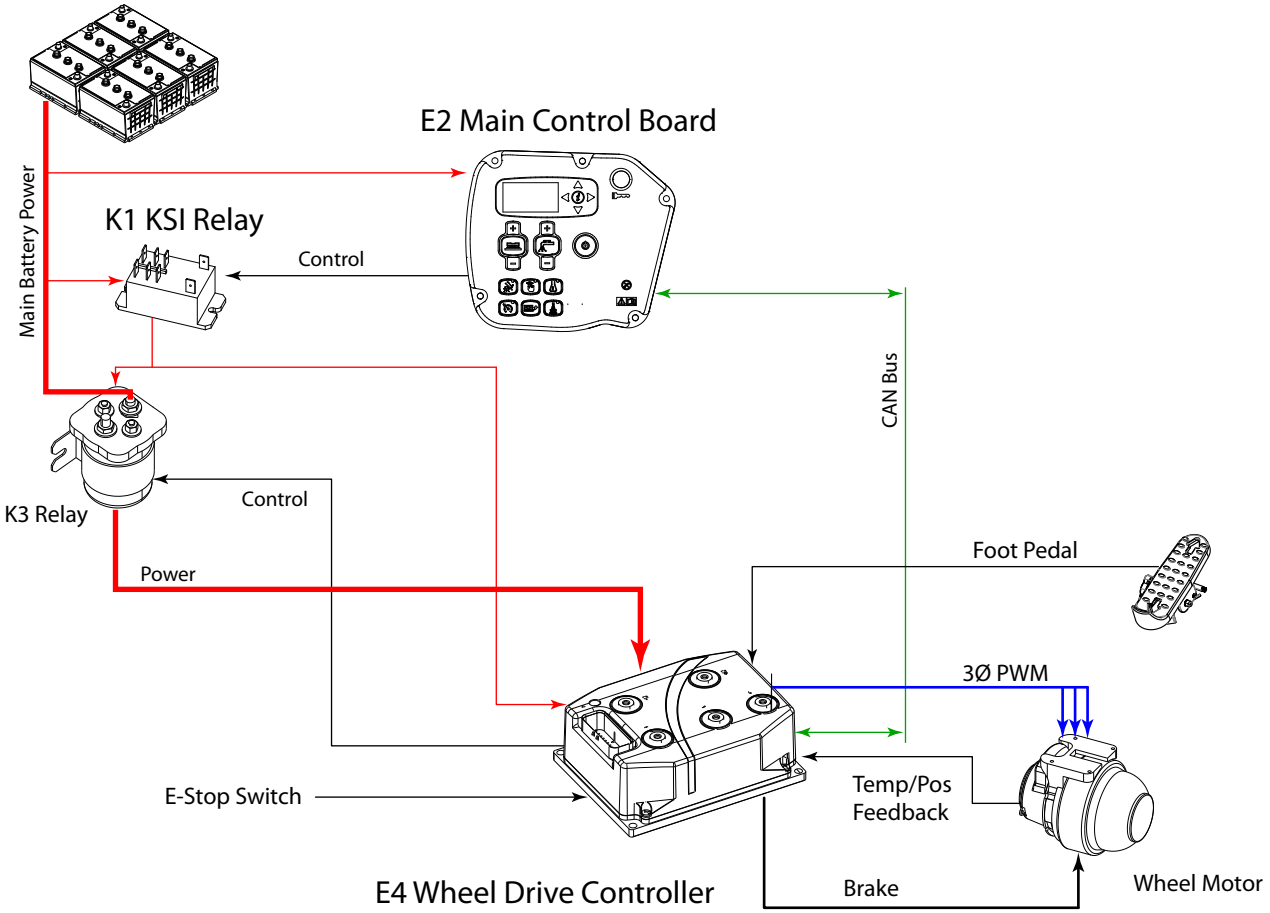

The drive motor is controlled from a Curtis 1232E drive controller, which is an AC induction motor controller for battery operated equipment. The controller generates a square wave, 3-phase, pulse-width-modulated output to the motor. The speed controller is designed specifically for DC motors with remote commutation. Pulse-width-modulation (PWM) is a form of motor speed control that alters the power to a motor by rapidly turning the power on and off. The ratio (also called “duty cycle”) between the On and Off states determines how much power the motor receives. The shorter the “off-time” the closer to full power the motor will receive. This switching occurs so fast (15kHz for this controller) that the motor simply sees it as a reduction in power (voltage) instead of the rapid on/off. PWM is a standard motor control technique because it is easier to turn power all the way on and all the way off, than it is to vary the magnitude of the power. Varying the magnitude would create a lot of heat that would need to be dissipated.

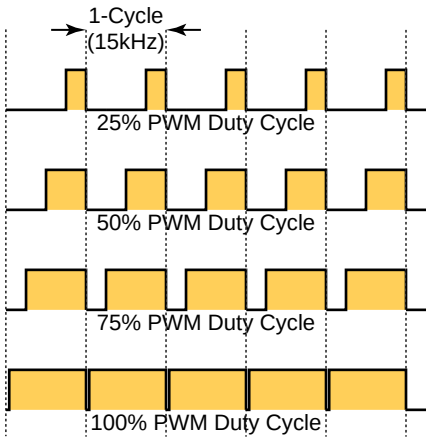

Operational Mode Prerequisites

Before the main controller can activate any of the operational modes, it must first check that the appropriate prerequisites are met.

- **Drive Controller outputs**
  - Drive wheel motor
    - No “interlock” message from the main controller on the CAN bus (only active during auto disc brush install mode)

Troubleshooting

Drive Controller (E4) Error Codes

The drive controller error codes will be displayed on the main display. However, the error number is also flashed on the two-color status LED on the module itself. The status LED has 2 colors; red and yellow. The red LED will flash out which digit of the code is coming next, and the yellow LED will flash out the value of that digit.

For example, to flash out an M4 Overload error with a code of 034, the red LED will flash once, followed by the yellow LED flashing 3 times. Then the red LED will flash twice, followed by the yellow LED flashing 4 times.

Code	Description	Comments
3-001	E4 Timeout	This error is generated by the main machine controller when the drive controller fails to communicate when expected.
3-012	Control Overcurrent	The output phase current exceeded permissible limits. Check the phase connections to the motor for shorts.
3-013	Current Sensor	The internal current sensors have an invalid reading. Troubleshoot the motor for shorts in the windings or power leads.
3-014	Precharge Fail	The capacitor bank failed to charge to KSI voltage. The K3 relay will not be permitted to close. • Check the KSI relay for loose connections or voltage drop.
3-015	Severe UnderTemp	The controller’s internal temp is below -40°C. The controller will be disabled.
3-016	Severe OverTemp	The controller’s internal temp is above 95°C. The controller will be disabled.
3-017	Severe UnderVolt	The capacitor bank voltage dropped below the preset limit. The drive will reduce power to the motor.
3-018	Severe OverVolt	The capacitor bank voltage exceeded the preset limit. The drive will be disabled.
3-022	OverTemp Cutback	The internal temperature exceeded 85°C. The output power will be reduced.
3-023	UnderVolt Cutback	The capacitor bank voltage dropped below the under voltage limit. The output power will be reduced. This may happen if the batteries are depleted.
3-024	OverVolt Cutback	The capacitor bank voltage exceeded limits during regenerative braking.
3-025	+5V Fault	The 5 volt supply is out of range. Likely due to excessive load.
3-028	Motor Hot Cutback	The wheel motor temperature is above the setpoint. The output will be reduced.
3-029	Motor Temp Sensor	The motor temperature thermistor is showing either 0 or 10 volts. Temperature not available, drive torque reduced.
3-031	K3 Coil Fault	The K3 relay coil is either opened or shorted.

Code	Description	Comments
3-032	EM Brake Fault	The brake coil is either opened or shorted.
3-036	Encoder Fault	Unexpected result from the motor encoder. Output disabled. Check to make sure either motor power or encoder wires are not reversed or disconnected.
3-037	Motor Open	One of the phases to the motor is open.
3-038	K3 Weld	The K3 contacts are detected closed when not commanded. May also occur if a motor phase is disconnected.
3-039	K3 Contact Open	The K3 is not providing power when commanded.
3-041	Pedal Open	The throttle pot wiper voltage is too high.
3-042	Pedal Short	The throttle pot wiper voltage is too low
3-045	Pot Low Overcurrent	The pot low current exceeds 10 mA.
3-046	EEPROM Fault	The controller operating system tried to write to EEPROM memory and failed.
3-047	HPD Fault	KSI, interlock, direction, and throttle inputs applied in incorrect sequence.
3-049	Parameter Change	The main controller commanded a parameter change. The drive is disabled until KSI is cycled.
3-051	Pedal Disable	The throttle was detected active on power-up. Throttle will be disabled.
3-052	Throttle active while off seat	(Won’t be displayed on screen) The throttle was not at neutral when the operator left the seat longer than the seat switch debounce time.
3-053	Push Too Fast Fault	(Won’t be displayed on screen) The wheel speed while in push mode is detected too high. The drive controller will activate to reduce wheel speed.
3-054	Throttle active with CAN interlock off	(Won’t be displayed on screen) The throttle was not in neutral when the interlock signal on the CAN Bus was not enabled.
3-055	E-Stop	(Won’t be displayed on screen) The E-stop was pressed while in motion. The controller will decelerate the machine and set the EM brake.
3-056	Low BDI	Low Battery Discharge Indicator. Drive power is reduced.
3-057	EM Brake Type	The EM brake type is incorrectly set in programming
3-058	Throttle Active with E-Stop	(Won’t be displayed on screen) The E-stop was pressed while the throttle was active. The machine will be slowed and stopped by the controller.
3-059	Throttle Forward Max Calibration	(Won’t be displayed on screen) The throttle maximum position during calibration is less than the deadband.
3-061	Throttle Reverse Max Calibration	
3-062	Throttle Neutral Deadband Calibration	(Won’t be displayed on screen) Unexpected results for neutral deadband calibration
3-063	Throttle Calibration Incomplete	(Won’t be displayed on screen) the throttle calibration was started but not completed.
3-064	Throttle Calibration with Active Pot Fault	(Won’t be displayed on screen) The throttle calibration was attempted while the 3-041 or 3-042 error conditions were set.
3-065	Multiple Throttle Calibrations Active	(Won’t be displayed on screen) This is a programming error that should not be encountered.
3-068	VCL Fault	Vehicle Control Language fault. Internal software error.
3-069	Supply Fault	The internal 5 or 12 volt power supplies are out of range.
3-071	OS General	Internal controller fault
3-072	PDO Timeout	The time between CAN PDO messages received exceeded the timeout period.
3-073	Stall	No motor encoder movement detected.

Code	Description	Comments
3-077	Supervisor Fault	Internal controller fault.
3-078	Supervisor Incompatible	Internal firmware fault
3-087	Motor Characterization	Motor setup parameters inconsistent
3-088	Encoder Pulse Fault	The encoder parameters do not match the encoder inputs
3-089	Motor Type	Motor type parameter set to an illegal value.
3-091	VCL/OS Mismatch	Internal error . The VCL software does not match the operating system.
3-092	EM Brake Not Set	Vehicle movement detected after the EM brake has been set.
3-093	Encoder LOS	Encoder Limited Operating Strategy in effect. An encoder error was triggered. Limited operation applied to bring the machine to a halt.

Maintenance and Adjustments

Drive Pedal Neutral Adjustment

Because the drive pedal potentiometer is set up in a wig-wag configuration, it is necessary to adjust the mid-point of the potentiometer to coincide with the relaxed position of the physical pedal. The Drive Controller places 5 volts on the potentiometer, and the mid-point neutral position should have 2.5 volts from the potentiometer wiper.

CAUTION: To reduce the risk of inadvertently activating the drive system, make sure all safety measures are in place. Always be prepared for the machine to move unexpectedly.

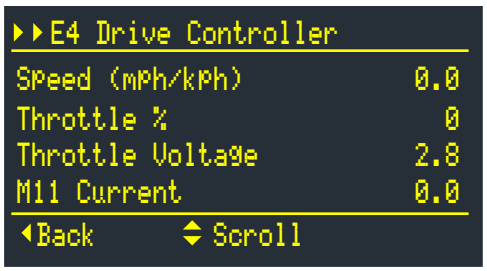

1. Power-on the machine with technician user level. If the machine errors due to a throttle position error, you may ignore it for now.
2. For safety, press the E-Stop button and make sure nothing is on the operator's seat that could close the seat switch.
3. Navigate to the E4 Drive Controller menu and scroll down to the "Throttle Voltage" status.
4. Make sure the drive pedal is in the center, relaxed position.
5. Check the Throttle Voltage listing on the display. If it is not 2.8 ± 0.2 volts, adjust the potentiometer position.

   a. Loosen the two screws that secure the potentiometer to the pedal housing.

   b. If the voltage is below 2.8V, rotate the potentiometer body clockwise slightly.

   c. If the voltage is above 2.8V, rotate the potentiometer body counterclockwise slightly.

   d. Without moving the potentiometer, retighten the mounting screws.

   - Note that the tolerance for the potentiometer of ± 0.2 volts is narrower than the tolerance that the drive controller considers the neutral position (± 0.5 volts). This provides a margin of error for the actual operation of the pedal during use.

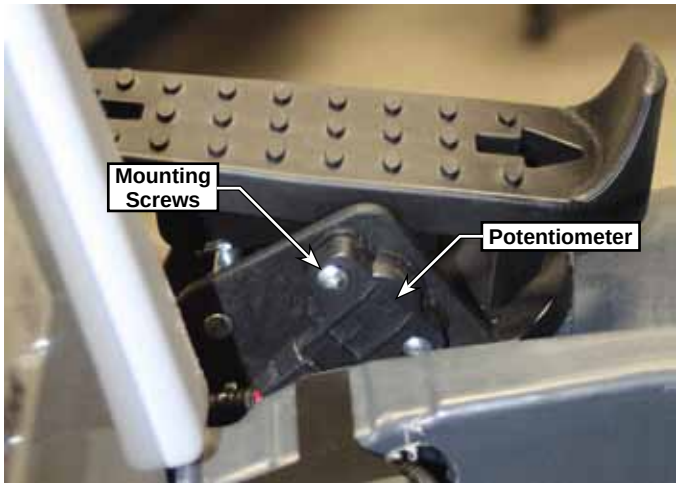

Removal and Installation

Drive Controller

WARNING: Components below the floor cover contain high energy battery power. Disconnect the battery connector before servicing machine.

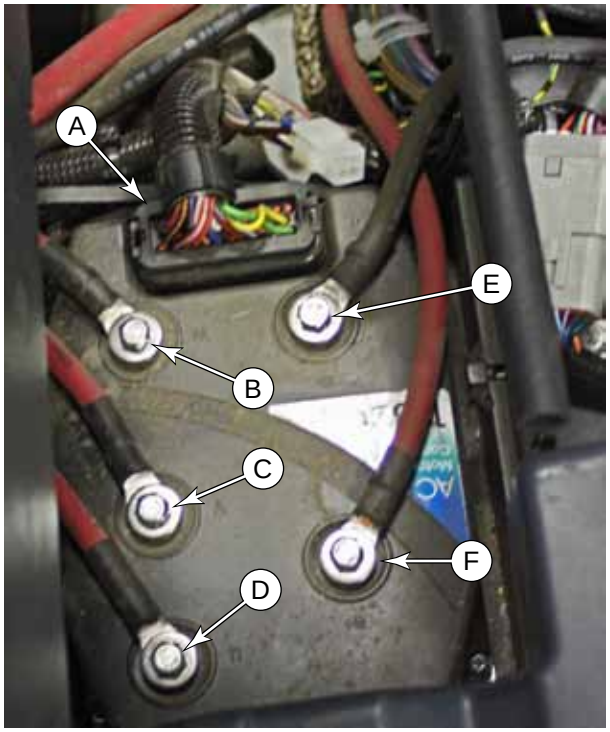

1. Turn off the machine and disconnect the main battery connector.
2. Remove the Floor Panel described on page 71.
3. Disconnect the logic cable connector **(A)** from the drive controller.
4. Remove the M6 screw that secures the K3 relay battery power wire **(F)**, and remove the wire, flat washer, and lock washer.
5. Remove the battery negative power wire **(E)**.
6. Label the 3 motor phase wires **(B,C,D)** with U, V, W, and then remove them from the controller (with flat washer and lock washer).

Note: *If any of the wires are reversed during replacement, the drive motor will rotate backward and operate loudly as the motor windings conflict with one another. The drive controller will also likely issue an encoder fault because the encoder will provide unexpected results.*

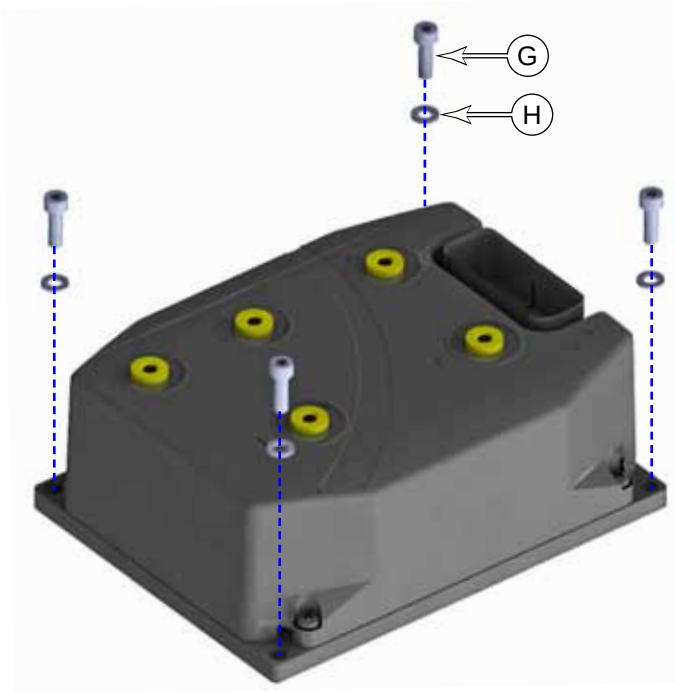

7. Remove the 4 screws **(G)** and washers **(H)** from the outer corners of the module (not the 4 inner screws) that secure the module to the machine frame, and remove the module.

Replacement Notes

- When replacing the wire lugs, torque the screws to 90 lb•in (10 N•m). Don't forget the flat and lock washers.
- It may not be necessary to complete the drive pedal calibration, but it is a good idea to at least check the voltage of the neutral position as described on page 53.
- After replacement, test the machine drive functions in an open area to ensure proper operation.

Drive Wheel Assembly

WARNING: Never work under machine without safety stands or blocking to support the machine. Disconnect the battery connector before servicing machine.

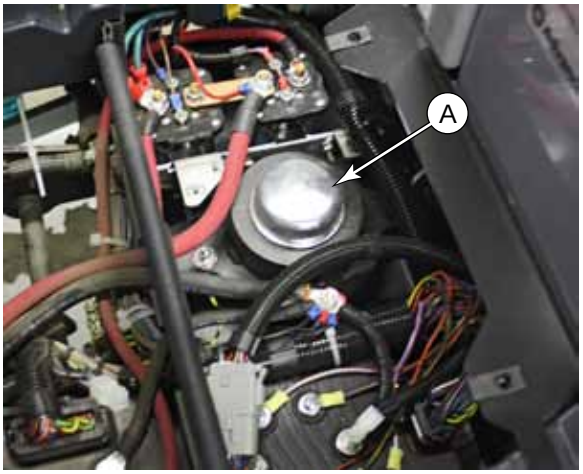

1. Turn off the machine and disconnect the batteries.
2. To reduce the weight of the machine, drain both the recovery and solution tanks, but do not jack the machine yet.
3. Remove the Floor Panel described on page 71.
4. Taking care to not damage or deform it, carefully pry up the dust cap **(A)** from the top of the spindle.

5. Label the 3 motor phase wires **(B,C,D)** with U, V, W, and then remove them from the controller (with flat washer and lock washer).

Note: *If any of the wires are reversed during replacement, the drive motor will rotate backward and operate loudly as the motor windings conflict with one another. The drive controller will also likely issue an encoder fault because the encoder will provide unexpected results.*

6. Disconnect the 8-pin harness connector between the drive controller and the wheel motor. The connector is located on the same bundle as the phase wires near the drive controller.
7. Free up the phase wires and make sure they are unrestrained all the way back to the motor.

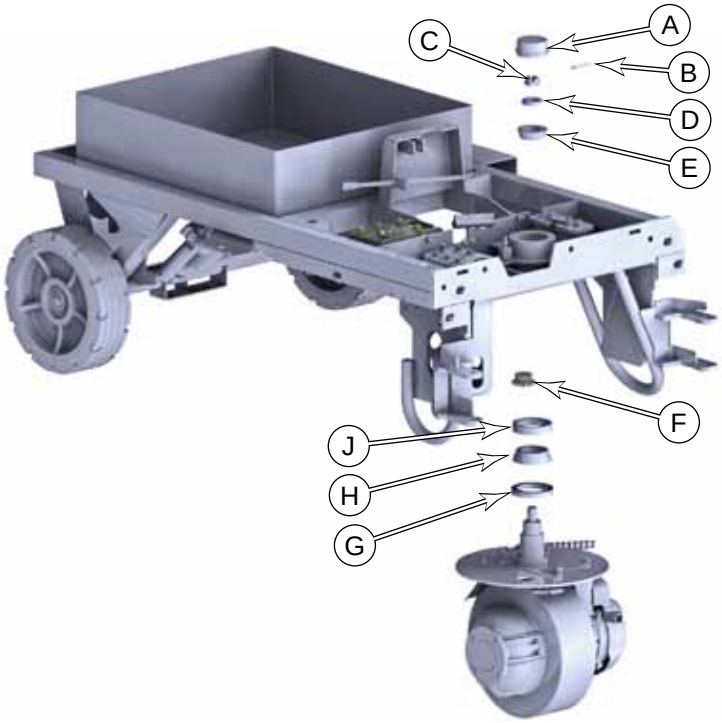

8. Remove the cotter pin **(B)** from the castle nut **(C)**, and remove the castle nut (30mm socket).

9. Remove the spacer **(D)** and the inner bearing cone **(E)**.

The steering chain needs to be freed from the steering shaft sprocket. This can be completed in one of two methods depending on which affords the easier access. You can either remove the masterlink from the chain (step 10), or remove the steering sprocket from the shaft (step 11). Regardless which method you use, you will probably find that reassembly is best using the masterlink.

10. If accessible, remove one of the two masterlinks **(K)** holding the steering chain to the steering disk, and free the chain from the smaller steering sprocket.

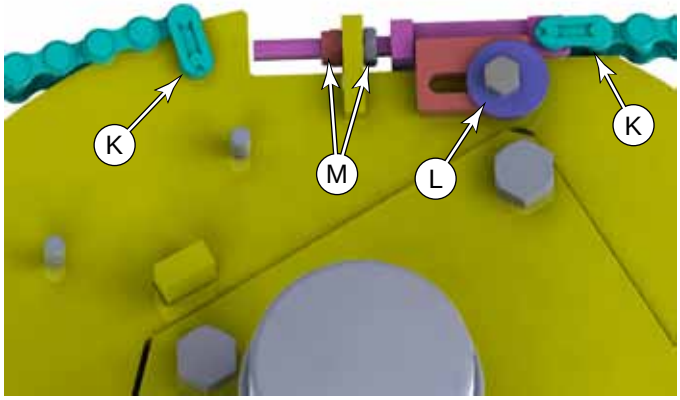

11. Alternatively, from under the machine just behind the front bumper, loosen the two setscrews from the smaller steering sprocket **(F)**.
    a. Slightly raise the machine just enough to take the weight off the front wheel and allow the lower cone bearing to misalign with its outer race (move slightly side to side).
    b. With slack on the steering chain, you should be able to remove the small steering sprocket from the steering shaft. Take care to not lose the woodruff key in the steering shaft.

12. While supporting the drive wheel, raise the machine until the steering spindle is free from the hub, and remove the wheel motor from the machine.

13. If you remove the phase wires from the motor, make sure to label them for correct replacement.

14. Using a seal puller, remove the lower seal **(G)** and discard the seal.

15. Remove the lower cone bearing **(H)**.

16. Clean the old grease out of the steering hub, and inspect the two bearing cups **(J)** that are pressed into the hub. If the cups need to be replaced, remove them with a bearing puller.

Replacement

1. Clean and repack the bearing cones with axle grease.
2. Place the lower bearing back into the hub, and carefully install a new seal to hold the bearing in place. While pressing the seal, take care to press it in straight.
3. If it wasn't previously done, remove one of the masterlinks that holds the steering chain to the steering disk. If necessary, tie the chain to the disk so it doesn't get kinked as you are moving the motor.
4. Reinstall the steering sprocket **(F)** to the steering shaft. Make sure the woodruff key is in position.

CAUTION: Keep your hands and fingers clear of the machine while lowering it onto the drive wheel. The weight of the machine could crush or sever your hands.

5. Align the steering spindle with the steering hub, and slowly lower the machine, making sure the spindle is not getting hung up in the spindle.
6. Replace the upper bearing cone **(E)**, spacer **(D)**, and castle nut **(C)**.
   a. Torque the castle nut to 40±4 lb•in (4.5±.5 N•m).
   b. Loosen the castle nut a minimum of 20 degrees and a maximum of 80 degrees, to align the first available cotter pin slot with the hole in the spindle.
   c. Install a new cotter pin in the castle nut.
7. Press the dust cover **(A)** back on to the top of the hub.
8. Rotate the drive wheel so it is pointing directly forward, and rotate the steering wheel so that one of the spokes is vertical.
9. Wrap the steering chain around the steering sprocket **(F)** and back to the steering disk.
10. Reinstall the masterlink to secure the chain to the disk. Note that the masterlink can be installed facing up or facing down, which ever is easier to install.
11. As necessary, adjust the chain tension. The chain should be snug enough to deflect 1/4" (5mm) in the gap, but not taught.
    a. Loosen the clamping screw **(L)**.
    b. Turn the adjustment and jam nuts **(M)** to adjust the tension.
    c. Retighten the clamping screw.

Electromechanical Brake

Removing the drive motor requires the drive wheel assembly to be removed from the machine so it can be stood on-end, to prevent the gear oil from leaking out of the gear box.

Replacing the electromechanical brake requires removing the motor because the wire passes through the motor housing flange. However, the brake disks can be inspected without removing the drive assembly from the machine.

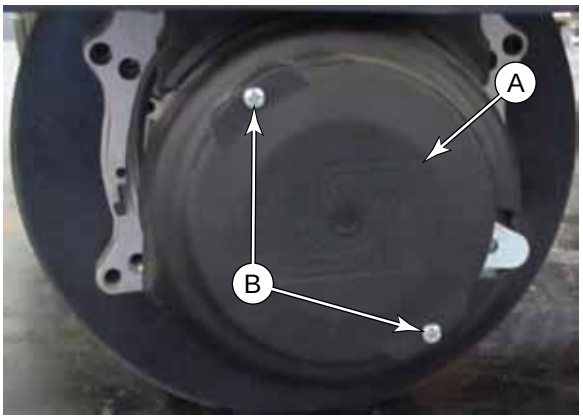

1. Remove the Drive Wheel Assembly described on page 55.
2. Remove the two screws **(B)** that secure the motor cover **(A)**, and remove the cover.

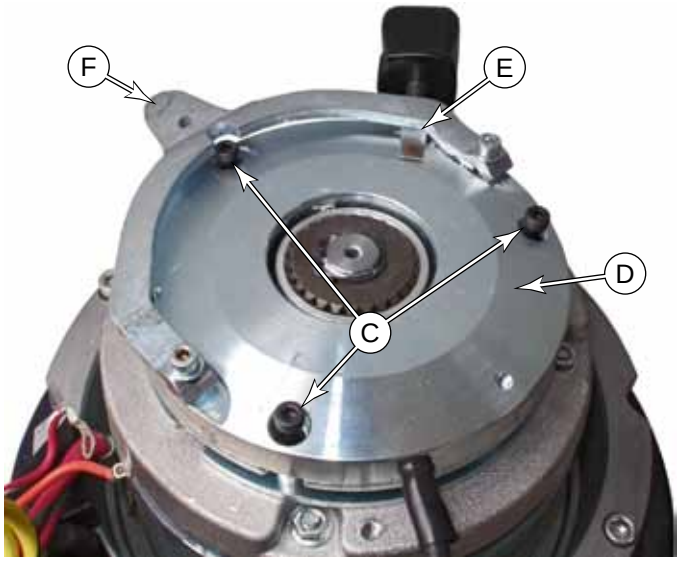

3. Remove the three screws **(C)** that secure the brake module **(D)** to the motor.
4. Free up the brake wire from the motor housing, and remove the brake.
5. During replacement, use a screw driver **(E)** to hold the brake release lever **(F)** raised. This will allow the spline gear to float while you realign the mounting screws.

Drive Tire

The drive tire consists of the urethane tire and the metal rim that it is attached to. The drive tire may be replaced without removing the wheel motor assembly from the machine. Pressing the rim off the wheel motor requires the tire pulling kit (56422174).

WARNING: This procedure requires working on an elevated machine. Make sure all safety precautions are in place before beginning this procedure. Use appropriate lifting points, jack stands, and wheel chocks. Make sure to disconnect the main battery connector under the operator's seat.

1. To reduce the weight of the machine, drain both the recovery and solution tanks.

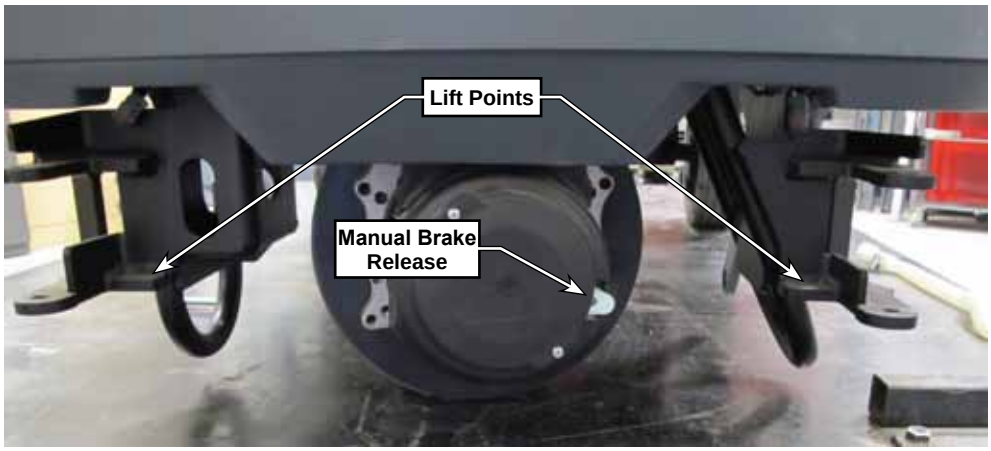

2. Chock both rear wheels to prevent the machine from moving. Once the front wheel is off the ground, there will be no machine brake.
3. Disconnect the main battery connector under the operator's seat.
4. To better expose the forward lifting points, you may choose to remove one or both Scrub Deck Doors described on page 96.
5. Lift the machine until the drive wheel is slightly off the ground, and then place jack stands under the lifting points for safety.

Note: *The drive hub screws may contain thread locking compound. The best method for releasing locking compound is to apply mild heat to the screws. The compound begins to loosen up at just over 150°F (65°C). If you need to apply heat, make sure to remove the plastic cover.*

6. If you need to apply heat, remove the hub cover by gently prying out on the 3 release tabs and pulling the cover away from the hub.
7. As necessary, apply a mild heat to the 4 screws that secure the hub **(A)** to the drive disk **(F)**. It doesn't take a lot of heat nor high temperature. The goal is just to warm the threads to around 150°F (65°C) to soften the thread locking compound.

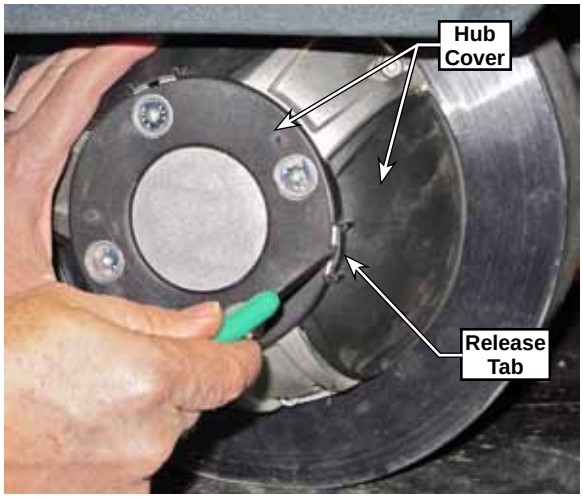

8. While each screw is still warm from heating, use a 5mm hex key to loosen the 4 screws **(B)**. A low-power impact driver may be helpful, but use caution to not sheer the screws or cam out the heads.

9. Using a 5mm hex key, remove the six screws **(C)** that secure the drive hub to the rim. (The hub is lightly pressed to the drive disk **(F)**, and will come loose later.)

10. Turn the steering wheel so the other side of the motor is facing outward.

11. Insert the four wheel puller bolts **(D)** into the threaded holes of the drive housing, and hand tighten them until they equally touch the metal rim of the tire.

12. Using a 5mm hex key, gradually tighten each bolt at about 1/2 to 1 turn at a time. Work in a crisscross pattern so each bolt pushes the wheel off the main bearing **(E)** equally. (The wheel hub will come free after just a few turns.)

For reference, the wheel/tire presses over the main bearing **(E)**. The drive hub is lightly pressed onto the tapered drive disk **(F)** of the gearbox.

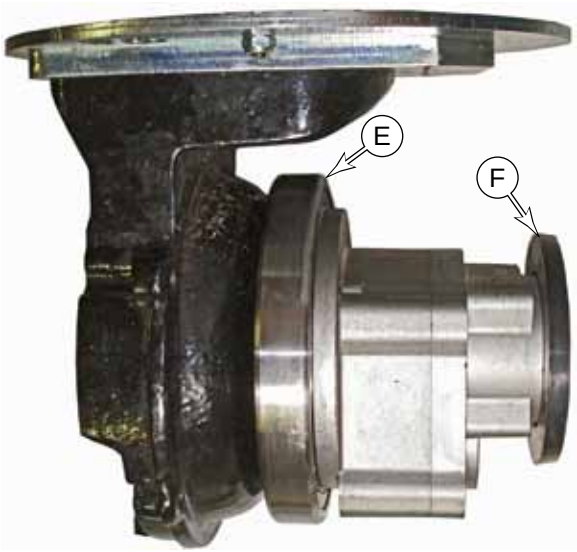

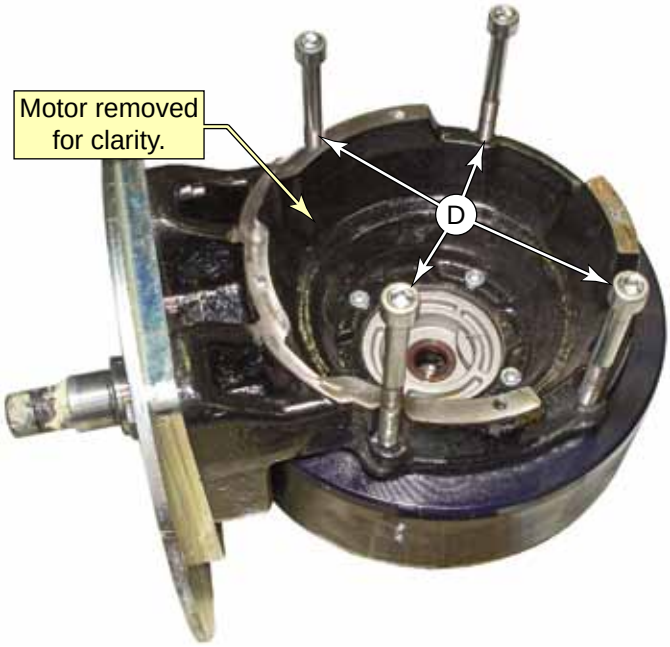

Replacement Notes

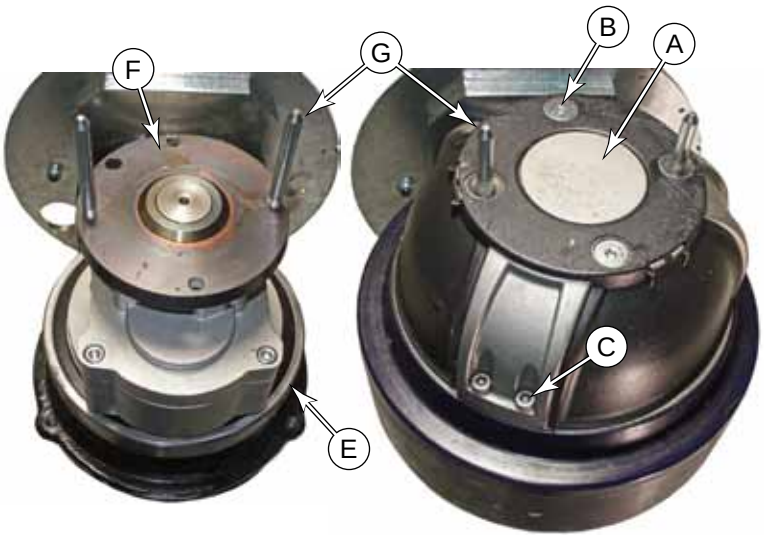

1. Install the drive hub **(A)** to the new wheel/tire using the six socket head cap screws **(C)**.
2. Remove the tire pulling bolts **(D)** from the drive housing.
3. Loosely install the two alignment pins **(G)** into two of the threaded holes of the drive disk **(F)**.
4. Slide the drive hub (with the new wheel/tire) over the alignment pins.
5. Gently tap on the upper portion of the drive hub **(A)** to get the wheel started over the main bearing **(E)** until the mounting screws **(B)** can be started in their threads.
6. Remove the alignment pins **(G)**, and replace them with the two remaining mounting screws **(B)**.
7. In small increments, simultaneously tighten all four mounting screws to pull the drive hub tight to the drive disk **(F)**.
8. Finish reassembling the machine by reversing the disassembly steps.

Specifications

Parameter	Range
Brake Coil Resistance	• 54 Ω
Wheel Motor Amperage	• No Load = 6 A, Typical
Throttle Potentiometer Resistance	• Total = 5.2 KΩ
K3 Coil Resistance	• 189 Ω

Drive Controller J4 Connector				
Pin	**Conductor**	**Wire Color**	**Circuit**	**Voltage (DC Volts to GND)**
1	W119	BLU-RED	KSI Relay	37.26V
2				
3				
4				
5	W061	GRY-ORN	Y1 EM Brake Control	37.2V off (brake applied) 1.3V energized (brake released)
6	W042	VIO-BLU	K3 Relay control	37.15V off 8.6V energized
7	W052	WHT-BLK	Internal sensor B- connection	0.004V
8	W054	PNK-WHT	Drive motor temperature sensor input	1.24V at room temp ~68 deg. F.
9	W176	GRN-BLU	Interlock (seat switch) input	37.2V closed (weight on seat)
10	W130	ORN	E-Stop input	37.2V Emergency switch closed
11				
12				
13	W059	BLU-ORN	Power out to K3 and Y1	37.19V
14				
15	W089	RED	+5V out to potentiometer	5.3V
16	W090	VIO-BLK	Throttle wiper input	Full forward - 5.1V Center (Neutral) - 2.85 Full reverse - 0.43V
17				
18	W091	GRY	Potentiometer low - internal B-	0.22V
19				
20				
21				
22				
23	W194	YEL	CAN 1 High	2.56V
24				
25	W057	PNK-RED	+12V supply for drive motor encoder	12.75V
26				
27				
28				

Drive Controller J4 Connector				
Pin	**Conductor**	**Wire Color**	**Circuit**	**Voltage (DC Volts to GND)**
29				
30				
31	W053	TAN-RED	Encoder Phase A input	11.4v when open 0.12V when closed 4.3V when wheel is rotating
32	W056	PNK-BLU	Encoder Phase B input	11.4v when open 0.12V when closed 4.3V when wheel is rotating
33				
34				
35	W197	GRN	CAN 1 Low	2.43V

Motor U, V and W Terminal Pair Voltages

- U to V - 42 mVAC with stationary motor. Up to 14 VAC with wheel off ground and full forward speed.
- V to W - 42 mVAC with stationary motor. Up to 14 VAC with wheel off ground and full forward speed.
- W to U - 42 mVAC with stationary motor. Up to 14 VAC with wheel off ground and full forward speed.

Motor U, V and W Terminal Pair Frequency

- U to V -24 KHZ with stationary motor. Up to 148 HZ with wheel off ground and full forward speed.
- V to W -24 KHZ with stationary motor. Up to 148 HZ with wheel off ground and full forward speed.
- W to U -24 KHZ with stationary motor. Up to 148 HZ with wheel off ground and full forward speed.

System Current Draw - Driving only with no cleaning functions

Measured with amp clamp around battery positive feed to drive controller. 6 Amps full speed forward with wheel off the ground.

22 - Steering System

Functional Description

The drive system on the SC6000 machine consists of a single, steerable drive wheel at the front of the machine. Steering control is made through the steering column that passes through a universal joint to translate the rotation from the angled steering wheel to the vertical shaft and pinion sprocket. The pinion sprocket drives a chain that wraps around the steering disk. The steering disk has no chain teeth, but the chain is fixed to the sprocket at the ends of the chain using standard master links.

Removal and Installation

Steering Wheel

Removing the steering wheel is a prerequisite procedure for completing other procedures, such as replacing the paddle switches below the steering wheel. To complete the procedure, you will need a bolt-type wheel puller with M6 bolts, such as shown to the right.

1. Carefully pry up the steering wheel hub cover **(A)**.
2. Remove the steering wheel retaining nut **(B)** and washer **(C)**. If you have difficulty loosening the nut, you may need to use a low-power impact driver.
3. Position the wheel puller over the steering wheel hub and thread the two bolts into the pulling holes in the hub. Make sure to thread the bolts in as far as you can, or at least .375 inches (10mm).
4. Align the wheel puller's center bolt on the steering shaft and hand tighten the center bolt until the puller stays in position.
5. Continue tightening the center bolt until the steering wheel comes loose from the tapered steering shaft. If the wheel does not come loose easily, you can use a low-power impact driver.
6. As you slide the steering wheel off the shaft, watch for the woodruff key **(E)** so it does not get lost. Unless the woodruff key is firmly stuck in the steering shaft, it is best to remove it and set it aside.

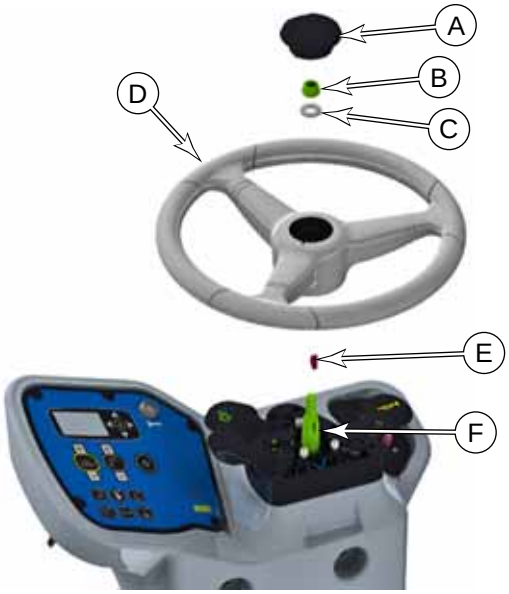

Replacement Notes

1. During replacement, make sure the woodruff key is in the steering shaft keyway, and align the steering wheel's keyway with the woodruff key.
2. Torque the steering nut **(B)** to 38-42 lb•ft (51-57 N•m). Do not use an impact driver to reinstall the nut.

24 - Electrical System

Functional Description

The SC6000 machine is powered using six, 6-volt batteries connected in series, for a total system nominal voltage of 36 volts. To protect the batteries from over discharge, the system is protected with a 150 amp fuse **(F1)** located on the battery positive main terminal. All connections are downstream from this main fuse.

There is also a 10 amp resettable circuit breaker protecting the main control board and all loads downstream from the KSI relay.

Adjacent to the circuit breaker is an Emergency Stop (E-Stop) switch. This is a normally closed switch that opens when active (button depressed). The E-stop switch is connected to both the main control board and the drive controller. The switch doesn't directly lock out any electrical circuit, but indicates to the particular module that all applicable functions should be inhibited.

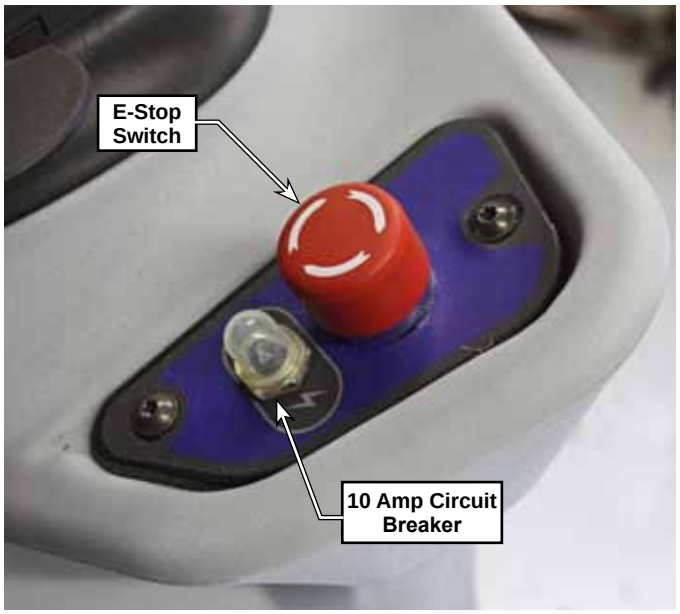

When the E-stop is activated, the machine ceases all output functions without reset. For example, the vacuum motor and brush motors will immediately be stopped, but the squeegee and deck lift actuators will remain in the down position. However, if the machine is turned off in this E-stop condition, the squeegee and deck will first be raised before the machine fully powers down.

Another protective device is the operator's seat switch. This is a normally open switch that detects the operator's weight in the seat and closes. The output of the seat switch is connected to both the main controller and the drive controller. When the switch is open, all drive functions are disabled. Unlike the E-stop switch, though, the seat switch does not disable most other machine functions. For example, the optional vac wand and wash hose features are intended to be operated when the operator is not seated.

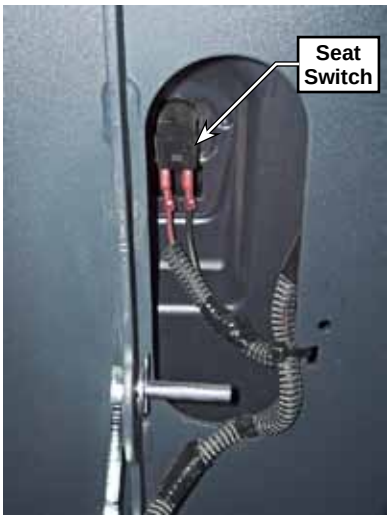

The machine may be equipped with an optional onboard charger for charging the batteries. The charger is generally autonomous and is connected directly to the batteries. However, it also contains an interlock feature to notify the Main Machine Controller that the charger is plugged in to facility power. When the charger is active, the Main Machine Controller disables all functions of the machine to prevent damage to either the machine or the charger.

Located below the left side of the floor panel are two power relays (K2 & K3). These are connected directly to the battery and supply high-energy power to the power module and the drive controller. These relays are controlled by the module for which they provide power, but are wired slightly different.

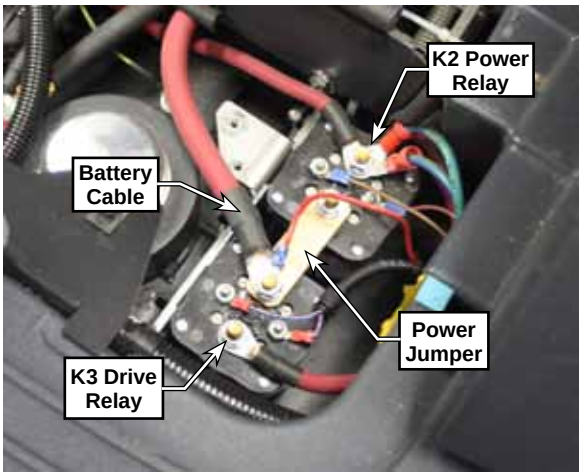

One side of the K2 power relay coil is connected to battery power, and the Power Module activates the relay by pulling the other connection to ground.

Both sides of the K3 drive relay are connected to the drive controller. The positive side is kind of like an enable circuit that enables both the K3 relay and the brake release. However, the negative side of the two are controlled separately.

Low Voltage Cutout

The main machine controller is equipped with a low-voltage cutout feature to prevent over-discharging of the batteries. When the battery voltage falls below a defined threshold, some machine functions are disabled. These threshold values are dependant on the type of battery specified in the main controller. In the first stage of cutout, the scrub system is disabled, but the recovery system will remain active. At the second stage, even the recovery system will be disabled, but the drive system remains active.

The drive controller has its own cutback feature, separate from the main controller. When the drive controller senses battery voltage too low, it will reduce power output to the drive motor to protect the battery.

Cutout Level	Threshold-Wet	Threshold-AGM	Affected Systems
Stage 1	30.8	32.6	All scrub functions disabled
Stage 2	30.6	32.4	Both scrub and recovery disabled

Troubleshooting

Onboard Charger Interlock

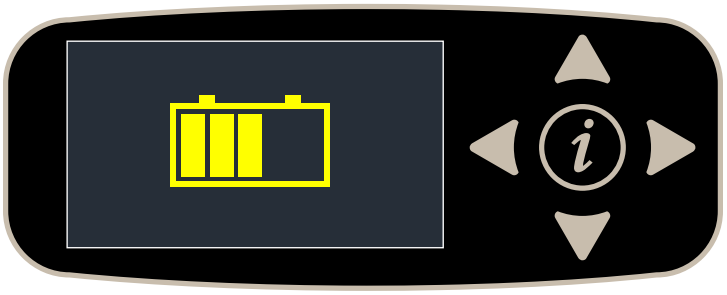

If the Main Machine Controller believes that the onboard battery charger is active, it will disable all machine function, including access to the menu system. In the event that the charger fails or was removed, you will be locked out of the system menus to change the configuration back to no charger. (If removing the charger, make sure to change the configuration first.)

If for whatever reason, the machine believes it is being charged when it is not, you will need to temporarily jumper the green interlock wire to battery-positive. The green interlock wire is located in the upper-left-rear corner of the battery bay behind the operator's seat.

With the interlock wire temporarily jumpered to B+, go into the Configuration menu and set Charger to No. When complete, remove the temporary jumper.

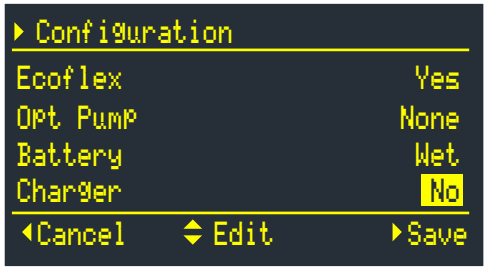

Battery Testing

A battery problem is usually recognized by the machine operator as a decrease in the machine's running time. This condition is usually caused by one or more "dead cells" in the battery system. There are 2 ways to find a dead cell:

- Use a hydrometer to check the specific gravity (or "state of charge") of the fluid in each cell. A dead cell is one that reads 50 points (or more) lower than the other cells.
- Use a volt meter to check the voltage of each battery. Look for a battery with a voltage that is 1 or 2 volts less than the other batteries. Check under the following conditions:
  - With the batteries fully charged,
  - With the scrub and drive motors running,
  - With the batteries discharged, but still above the voltage cutoff threshold.

If the batteries in the machine are more than 1 year old, it's usually best to replace the whole set, rather than replacing one or two batteries. Mixing old and new batteries can result in over-charging problems.

The Main Machine Controller also monitors the battery voltage, and progressively disables functionality when the batteries are reaching a full depleted voltage. These voltage thresholds will vary depending on the type of battery installed (configured in the controller). For example, wet batteries are permitted to drain to a lower voltage than AGM batteries.

Maintenance and Adjustment

Setting Onboard Charger Battery Profile

The machine may be equipped with the optional onboard battery charger. If the charger is just being installed, or the batteries have been replaced with a different type, it will be necessary to program the charger to properly charge the batteries according to their type.

Batteries operate on chemical reactions that produce an electrical charge. Charging a battery reverses these chemical reactions so they can produce power again. Because these chemical reactions are complex, their reversal is also complex, at least from the standpoint of maintaining good health of the battery. This process is referred to as a charging algorithm. During the charging algorithm, various stages of the charging process are handled differently, depending on the chemical makeup of the battery.

Battery charging occurs in various phases, such as an initial charge, to a bulk charge, to an equalization or gassing phase. During each of these phases, the method and rate of charge is varied to optimize the reverse chemical reaction. Some may be constant-current, some constant-voltage, and some may be other methods. The Delta-Q charger is an intelligent charger that incorporates these various charging algorithms for multiple battery types.

Charging Profiles

The Delta-Q charger contains many charging profiles, which are identified by number. The table to the right lists those profiles that are applicable to SC6000 battery system options.

Nilfisk Part No.	Manufacturer	Model	Charge Profile	Voltage	Amp Hour
56112546	Discover	EV305A-A	**43**	6	312
56112546	Fullriver	DC335-6	**141**	6	335
56388582	Discover	EVL16A-A	**43**	6	390
56388582	US Battery	L16HC	**73**	6	415
56391391	Trojan	J-305G	**7**	6	285
56391391	US Battery	US-305	**72**	6	305
80564000	Exide	DF 06V-180A	**51**	6	180
80564100	Exide	DF 06 240 V	**12**	6	240
80565000	Exide	FF 06 255	**21**	6	255

The Delta-Q instruction manual explains how to set these profiles. There are two options for programming this information into the charger.

One option uses a laptop, QuiQ software, and a special USB interface connector kit. This method is the easiest, but it does require obtaining the QuiQ Program Kit (Pn 56315732). The QuiQ Program kit will contain instructions for use.

The second option, although more complex, doesn't require any special tools. It communicates to the charger by disconnecting the battery terminal and "tapping" the terminal back to the battery to signify which numerical algorithm code to use. These instructions are included with the charger.

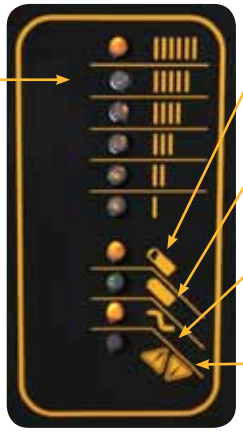

Ammeter
- If solid: Displays scale of output during bulk phase.
- If flashing: Output has been reduced due to high internal charger temperature. Displays charge profiles 1-6 for 11 seconds if no battery is connected.

Bulk Charge Indicator
- If solid: Bulk charge phase complete (80% charged); in absorption phase.
- If flashing: Displays charge profile number if no battery is connected. Displays charge profiles 7 and above.

Charge Completion Indicator (Green Light)
- If solid: Charging complete and maintenance mode is active.
- If flashing: Absorption phase complete, in finishing phase.

AC Indicator
- If solid: AC power is present.
- If flashing: Low AC voltage. Check electrical source and cord length.

Fault Indicator (Red Light)
- Charger error.

Removal and Installation

Batteries

CAUTION: *Use extreme caution when working with batteries. Sulfuric acid in batteries can cause severe injury if allowed to contact the skin or eyes.*

- *Explosive hydrogen gas is vented from the batteries through openings in the battery caps. Do not smoke while servicing the batteries.*
- *Remove all jewelry. Wear safety glasses, rubber gloves and a rubber apron*
- *Do not allow tools to touch more than one battery terminal at a time*
- *Electrical components in this machine can be severely damaged if the batteries are not installed and connected properly.*
- *The batteries are extremely heavy and may require a lifting device or assistance to remove and replace into the machine.*

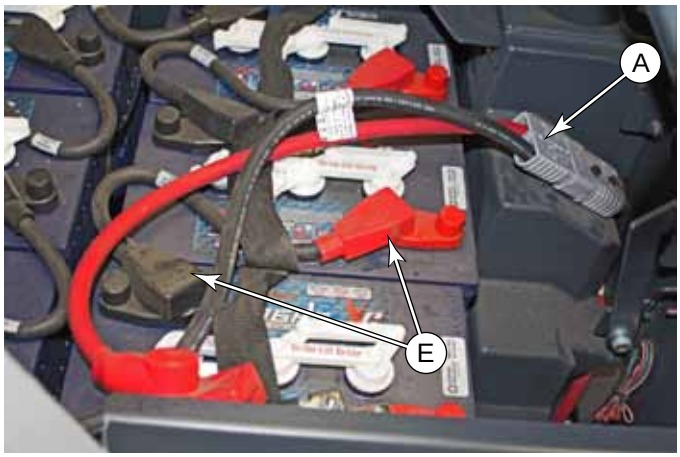

1. Turn the off the machine and disconnect the main battery connector **(A)**.
2. Pull back the insulating boot **(B)** and disconnect the main battery connector's positive terminal at **(C)**. Do not disconnect at lug **(D)** because that secures the 150 amp fuse.
3. In a similar manner, remove the main battery connector's negative terminal. However, there is no fuse at the negative terminal.
4. Taking care to not short across the battery terminals, remove each of the interconnecting cables **(E)** from the batteries.
5. Make sure the battery straps are not damaged or cut, and then lift out each of the batteries from the battery bay.

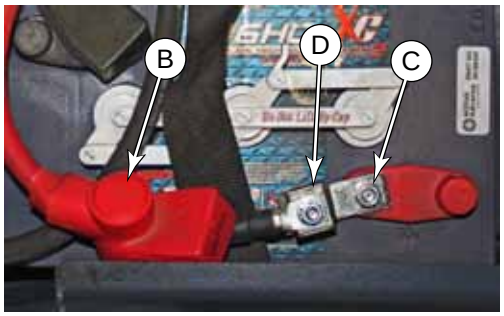

6. Install the new batteries into the compartment. Note the orientation of the batteries shown to the right.
7. Reconnect the battery cables.
   - All cables are connected positive-to-negative for a series connection between all 6 batteries.
   - Position the cables so the battery caps can be easily removed for battery service.
   - Take care to not over torque the cable connector, as this may damage the battery post.
8. Coat the terminals with spray-on battery terminal coating (available at most auto parts stores).

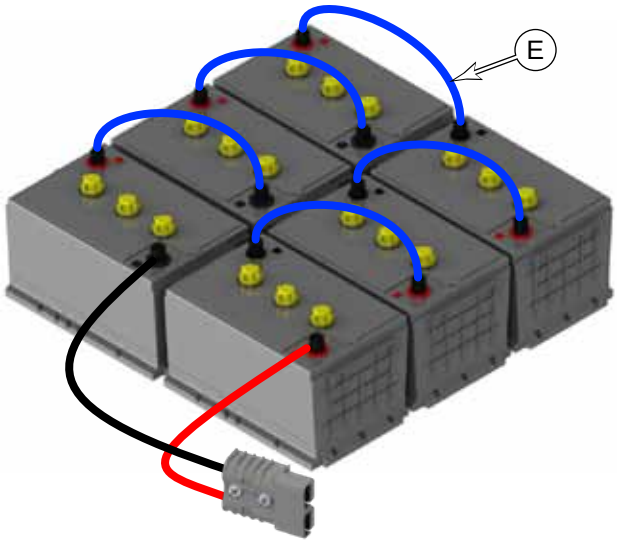

Paddle Switches

The paddle switches are located below the steering wheel and are connected together as a single harness assembly.

1. Turn off the machine and disconnect the main battery connector.
2. Remove the Steering Wheel described on page 64.
3. Remove the 3 screws and washers **(B)** that secure the paddle housing to the steering column.
4. Lift the paddle housing up and disconnect the electrical connector **(D)** below the housing.
5. Remove the 2 screws **(A)** that secure the housing cover **(C)** to the housing, and remove the cover.

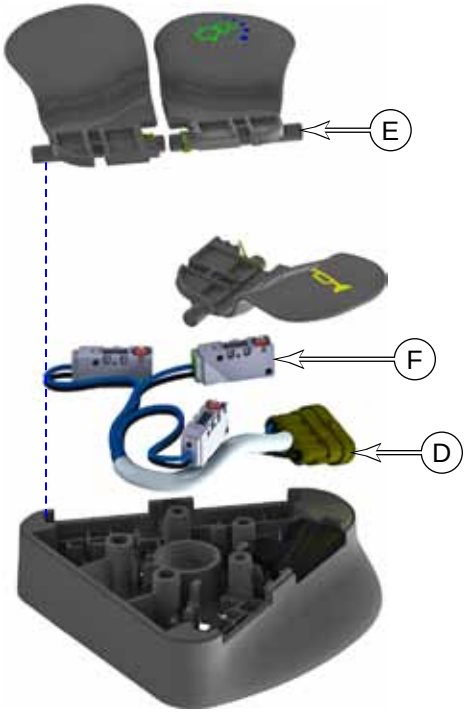

6. Taking care not to lose the springs, lift out each of the 3 paddles **(E)** from the housing. Make note of the spring orientation for later replacement.
7. Lift the 3 switches out of the housing, and free up the wiring harness to remove them.
8. During replacement, make sure to get the switches into the correct locations. If necessary, trace the wires back to the harness connector as described below: (The switches should also be identified on the wiring harness.)
   - 1 = Burst of Power Switch
   - 2 = Horn Switch
   - 3 = Solution Switch
   - 4 = GND to all switches

Floor Panel
Steering Column Cover

The floor cover provides access to many of the power control systems, such as the main power relays (K2/K3), power module, and drive controller. The steering column cover provides access to the main wiring harness, and also some steering linkage components. Removal of the two is interrelated, and is presented here as a single procedure. This is a prerequisite procedure for completing other procedures that require access to these two panels.

CAUTION: This procedure exposes some high-energy components of the machine. It is important to disconnect the main battery connector to protect against short circuits and arcing of exposed components.

1. Turn off the machine and disconnect the main battery connector.
2. Remove the two screws **(B)** that secure the front of the floor panel, and lift the floor panel **(A)** out by tilting it up from the front, and sliding it away from the retaining tabs **(A1)**.
   - If you are only removing the floor cover, stop here.
3. At your discretion, you can remove the floor support **(C)** by removing the two screws and washers **(D&E)**. (The floor support can't be removed until the steering column panel screws **(G)** are removed.)
4. Remove the four screws **(G)** securing the steering column panel to the steering column, And lift the panel out of the column.

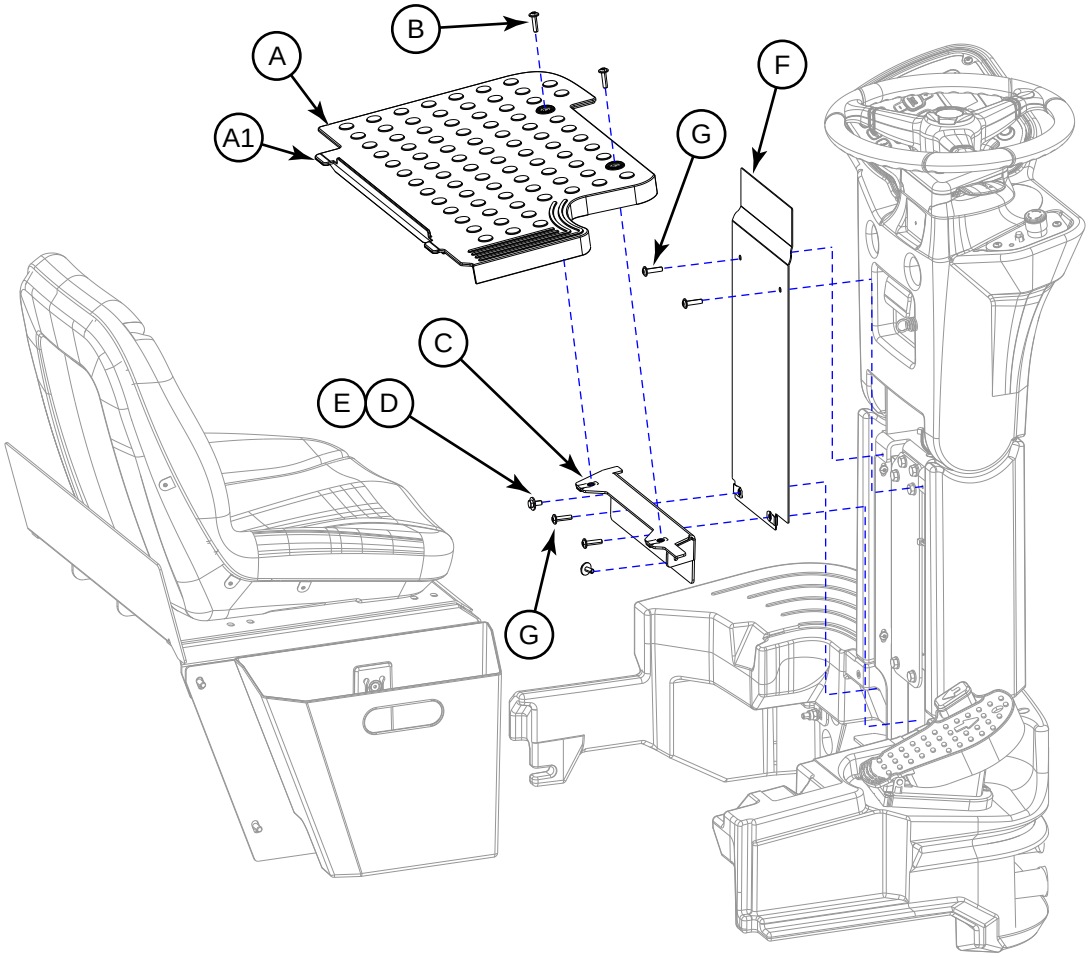

Specifications

Connector Pinouts

Main Control Board J1 Connector			
Pin #	**Name**	**Wire Color, ID**	
J1-1	Bat+	YEL-BRN,W159	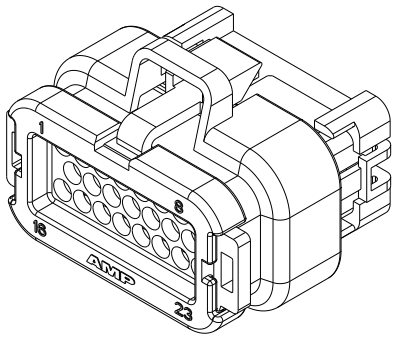 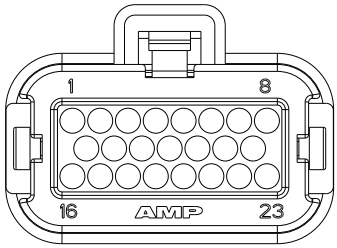
J1-2	Bat+	YEL-BRN,W160	
J1-3	KSI Coil Out	ORN-BRN,W162	
J1-4	Solution Solenoid	GRY-BLK,W163	
J1-5	Bat-	BLK, W147	
J1-6	Bat-	BLK, W146	
J1-7	---	---	
J1-8	---	---	
J1-9	Headlights	BLK, W142	
J1-10	E-Stop In	ORN,W178	
J1-11	Charger Interlock	GRN,W245	
J1-12	Seat Switch	GRN-BLU,W175	
J1-13	Dust Guard Sol.	YEL-WHT,W164	
J1-14	Backup Alarm	GRN-BRN,W165	
J1-15	---	---	
J1-16	Detergent Pump 1+	GRN-RED,W171	
J1-17	Detergent Pump 1-	ORN-GRY,W172	
J1-18	Detergent Pump 2+	BLU-YEL,W173	
J1-19	Detergent Pump 2-	RED-WHT,W174	
J1-20	KSI In	GRY,W167	
J1-21	KSI In	GRY,W168	
J1-22	Horn	VIO-BRN,18,W166	
J1-23	---	---	

Main Control Board J2 Connector			
Pin #	**Name**	**Wire Color, ID**	
J2-1	Telemetry CAN-H	YEL,W232 (twisted)	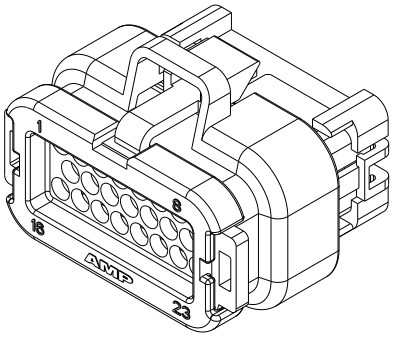 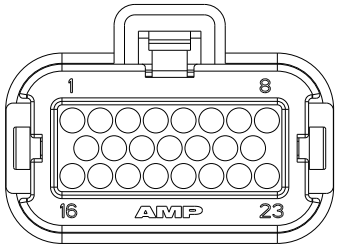
J2-2	Telemetry CAN-L	GRN,W233 (twisted)	
J2-3			
J2-4	SmartKey GND	BRN,W185	
J2-5	SmartKey Signal	WHT,W220	
J2-6	Bat-	BLK,W148	
J2-7			
J2-8	Float Switch Sensor	WHT-ORN,W191	
J2-9	Side Sweep Sensor	BLU-BRN,W186	
J2-10	Level 1 Sensor	BLU,W187	
J2-11	Main CAN-L	GRN,W195 (W196/W197)	
J2-12	Main CAN-H	YEL,W192 (W193/W194)	
J2-13	Level 2 Sensor	WHT,W188	
J2-14	Level 3 Sensor	YEL,W189	
J2-15	Level 4 Sensor	RED,W190	
J2-16	Horn Switch In	YEL-RED,W199	
J2-17	BoP Switch In	ORN-RED,W198	
J2-18	Solution Switch In	TAN-WHT,W200	
J2-19	USB VBUS	RED,W204	
J2-20	USB DM	WHT,W203	
J2-21	USB DP	GRN,W202	
J2-22			
J2-23	USB GND	BLK,W221	

Power Module J3 Connector			
Pin #	**Name**	**Wire Color, ID**	
J3-1	Deck Actuator -	ORN-GRA,W013	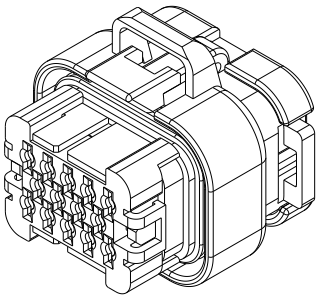 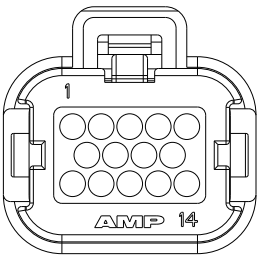
J3-2	K2 Coil Out	BRN,W019	
J3-3	CAN Bus-L	GRN,W196	
J3-4	CAN Bus-H	YEL,W193	
J3-5	Curtis Prog +15V	----	
J3-6	Deck Actuator +	BLU-GRA,W014	
J3-7	Curtis Prog RX	----	
J3-8	Curtis Prog TX	----	
J3-9	KSI In	BLU-RED,W247	
J3-10	Opt. Pump +	WHT-BLK,W225	
J3-11	Opt. Pump -	BLU-ORN,W170	
J3-12	Bat-	BLK,W122	
J3-13	Squeegee Act. +	TAN-BLU,W011	
J3-14	Squeegee Act. -	BLK-GRA,W010	

Drive Controller J4 Connector			
Pin #	**Name**	**Wire Color, ID**	
J4-1	KSI In	BLU-RED,W119	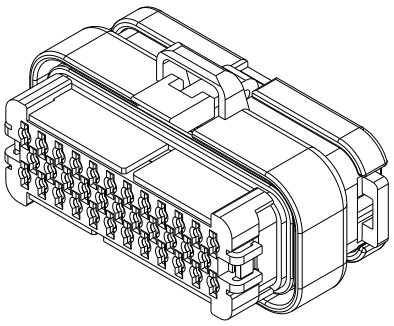 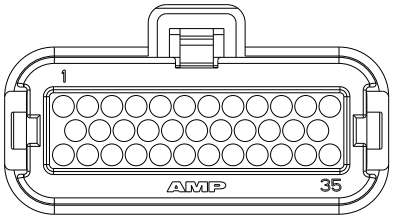
J4-2			
J4-3			
J4-4			
J4-5	Brake -	GRY-ORN,W061	
J4-6	K3 Relay Coil	VIO-BLU,W042	
J4-7	Common (GND) Out	WHT-BLK,W052	
J4-8	Temp Sensor	PNK-WHT,W054	
J4-9	Seat Switch In	GRN-BLU,W176	
J4-10	E-Stop In	ORN,W130	
J4-11			
J4-12			
J4-13	Brake/KSI Bat+	BLU-ORN,W059	
J4-14			
J4-15	Drive Pedal +5V	RED, W089	
J4-16	Drive Pedal Wiper	VIO-BLK,W090	
J4-17			
J4-18	Drive Pedal B-	GRY,W091	
J4-19			
J4-20			
J4-21			
J4-22			
J4-23	CAN Bus-H	YEL,W194 (twisted)	
J4-24			
J4-25	+12V Out	PNK-RED,W057	
J4-26			
J4-27			
J4-28	Curtis Prog. TX	-----	
J4-29	Curtis Prog. RX	-----	
J4-30			
J4-31	Phase A Encoder	TAN-RED,W053	
J4-32	Phase B Encoder	PNK-BLU,W056	
J4-33			
J4-34			
J4-35	CAN Bus-L	GRN,W197 (twisted)	

TrackClean X163 Connector			
Pin #	**Name**	**Wire Color, ID**	
1	TC CAN-H	YEL,W232	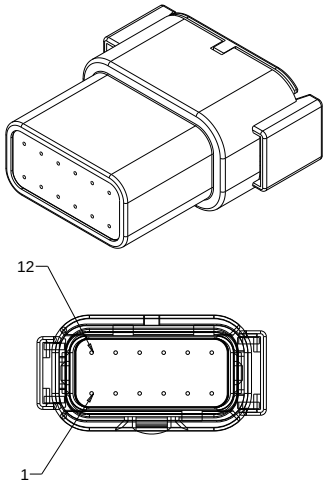
2	KSI In	BLU-RED,W205	
3	Bat+	YEL-BRN,W161	
4	GND	BLK,W131	
5			
6			
7			
8			
9			
10			
11			
12	TC CAN-L	GRN,W233	

Level Sensor X79 Connector			
Pin #	**Name**	**Wire Color, ID**	
1	Level 1	BLU,W187	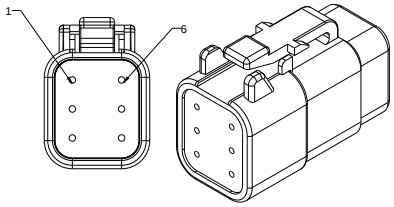
2	Level 2	WHT,W188	
3	Level 3	YEL,W189	
4	Level 4	RED,W190	
5	GND	BLK,W133	
6	---	---	

Steering Column Paddle X98 Connector			
Pin #	**Name**	**Wire Color, ID**	
1	BoP Switch	ORN-RED,W198	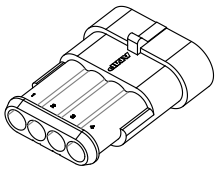
2	Horn Switch	YEL-RED,W199	
3	Solution Switch	TAN-WHT,W200	
4	GND	BLK,W129	

Vacuum X157 Connector			
Pin #	**Name**	**Wire Color, ID**	
1	Vac Motor +	GRA-RED,W084	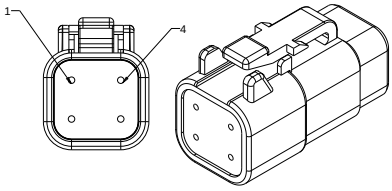
2	Vac Motor -	BLU-GRN,W079	
3	Float Switch	WHT-ORN,W191	
4	GND	BLK,W136	

2 pin connectors		
Con	**Name**	**Pin, Color, ID**
X72	Side Sweep Motor	1 = BLU-GRN,W078 2 = ORN-RED,W083
X75	Squeegee Actuator	1 = TAN-BLU,W011 2 = BLK-GRA,W010
X76	Option Pump	1 = WHT-BLK,W225 2 = BLU-ORN,W170
X78	Solution Solenoid	1 = GRY-BLK,W163 2 = GRY,W106
X83	Deck Actuator	1 = BLU-GRA,W014 2 = ORN-GRA,W013
X84	Left Brush Motor	1 = BLU-GRN,W077 2 = BLK-YEL,W082
X128	Right Brush Motor	1 = WHT-VIO,W128 2 = BLU-GRN,W127
X143	Backup Alarm	1 = GRN-BRN,W165 2 = GRY,W108
X145	Vac 2 Motor	1 = ORN-BLU,W085 2 = BLU-GRN,W080
X151	Beacon	1 = BLU-RED,W140 2 = BLK,W145
X168	Side Sweep Sensor	1 = BLK,W135 2 = BLU-BRN,W186

Working with Schematics and Diagrams

Wiring diagrams show how electrical components are connected together and to a large degree “how things work”. However, they do not specifically show where things are located. The most common diagram is the schematic. The schematic represents the connections and interactions between components, using abstract symbols to generically represent the components. There are different forms of schematics, which vary depending on their purpose and even type of system. Schematics can be used to represent electrical systems, hydraulic systems, pneumatic systems, or countless other interconnected systems.

Navigation

In some cases it is necessary to have references across different areas of a drawing. These references can point across the drawing sheet, or to different sheets in a multi-sheet schematic. The references are commonly referred to as “Tags”. At a minimum, tags typically have a name or designation, but they may also contain coordinate pointers to their counterpart.

In the sample diagram below, the output from the seat switch needs to connect to the main controller on sheet #1 and also to the drive controller on sheet #3. The identifying name could be an actual name, such as (Seat Switch), or in this case, just a letter designator (G). Both ends of a tag will have the same identifier.

In addition to the identifier, the tag also contains coordinate information to help you locate the mating tag faster. So the first tag contains the coordinates of the second tag, and the second tag contains the coordinates of the first tag. The format of these coordinates are Sheet, Column, and Row.

These coordinates are part of the default title blocks on engineering drawings, and run around the perimeter of the drawing sheet. The columns are represented by the letters across the top/bottom of the drawing, and the rows are represented by the numbers down the sides of the drawing.

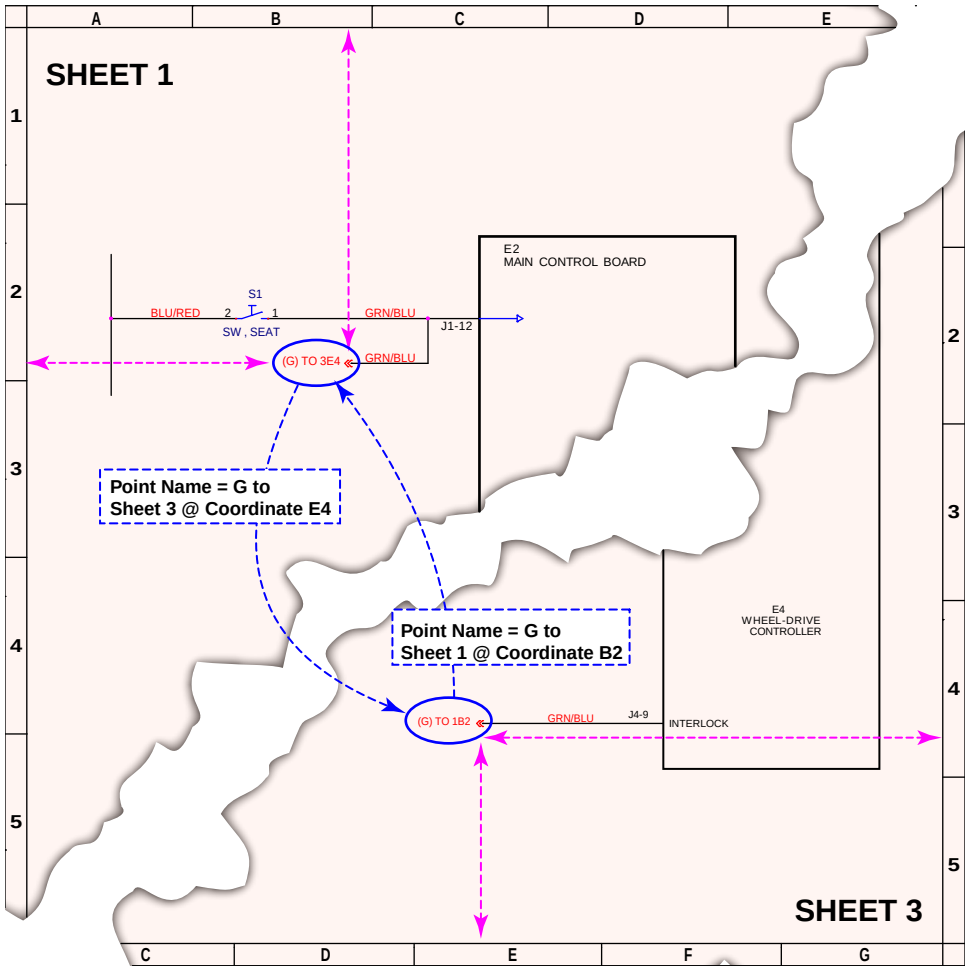

Common Schematic Symbols

Control Board Inputs and Outputs: Not all control board inputs or outputs are given special symbolic meaning, but to the left are a couple of commons symbols. The right-hand side shows an input with a pull-up resistor. The significance of this input is that when the input is an open circuit, the pull-up resistor forces the input positive. This type of input is active when the external device pulls the signal to ground.

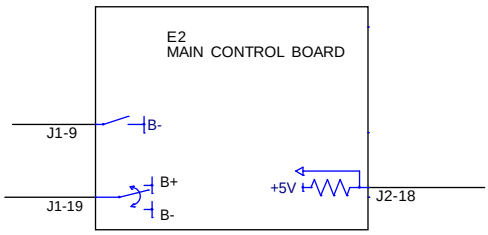

The two outputs on the left signify a PWM controlled output, with the upper symbol signifying a positive PWM, and the lower symbol signifying a reversing positive/negative PWM control.

Identification: Each component on the schematic contains a variety of identifying information that is useful for troubleshooting and tracing circuits. The component ID is used throughout the system to identify the device, including in the controller menu display. The component name helps identify the device as it relates to the machine itself. The wire color identifiers help for tracing wire connections to the device, and when applicable, the terminal numbers identify where those wires connect to the device.

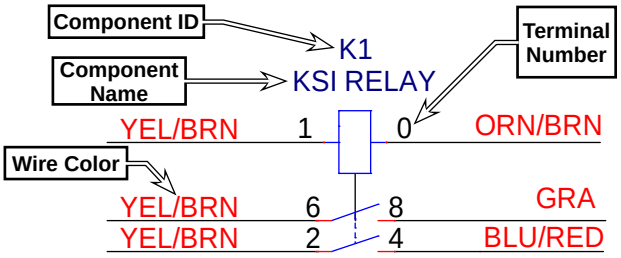

Switches: Switches come in several types, but the most significant aspect about a switch is whether its contacts are normally-open or normally-closed. Schematically, normally-open switches are drawn with the switch blade above the contact position, and normally-closed switches are drawn with the switch blade below the contact. Some switches are shown with additional pictographic elements to signify the type of action used to control the switch. For example, a float switch uses a symbol resembling a float ball.

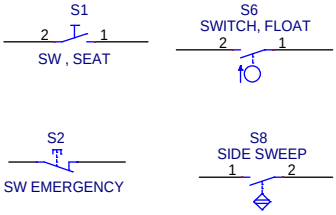

Relays: Relays are solenoid-controlled switches. Whenever possible, they are drawn with the relay coil and switch(s) stacked vertically, with a dotted line between them to signify the control. When the coil and contacts can't be kept together, they use similar reference tags to those described on page 77.

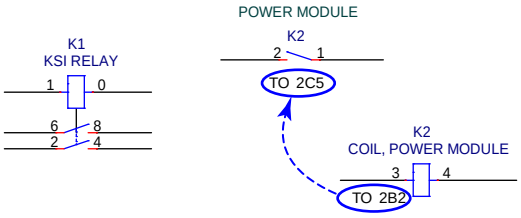

Wiring Diagram

Drawing: 56116048 Rev C, (Sheet 1 of 3, Main Controller)

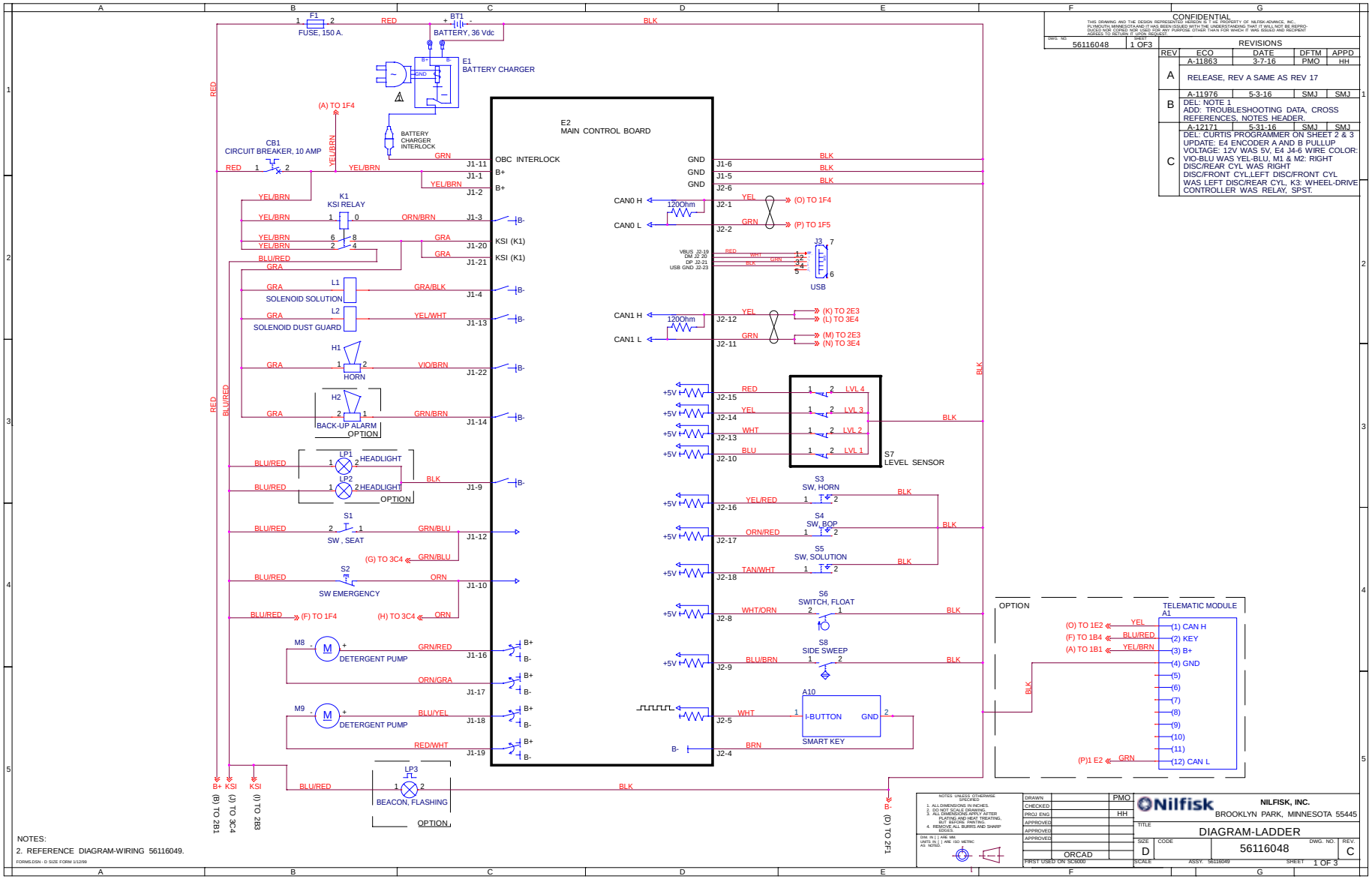

Wiring Diagram (continued)

Drawing: 56116048 Rev C, (Sheet 2 of 3, Power Module)

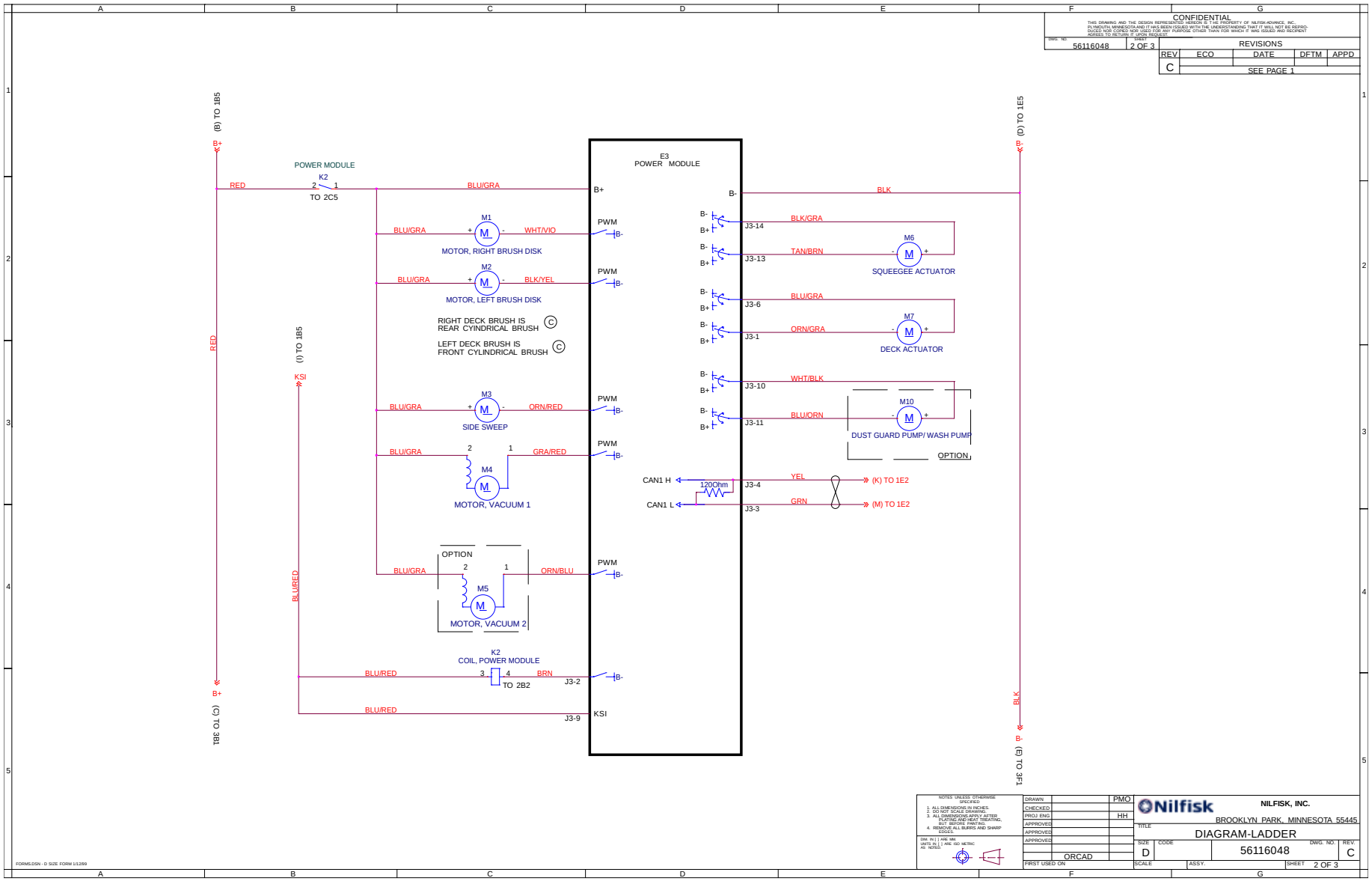

Wiring Diagram (continued)

Drawing: 56116048 Rev C, (Sheet 3 of 3, Drive Controller)

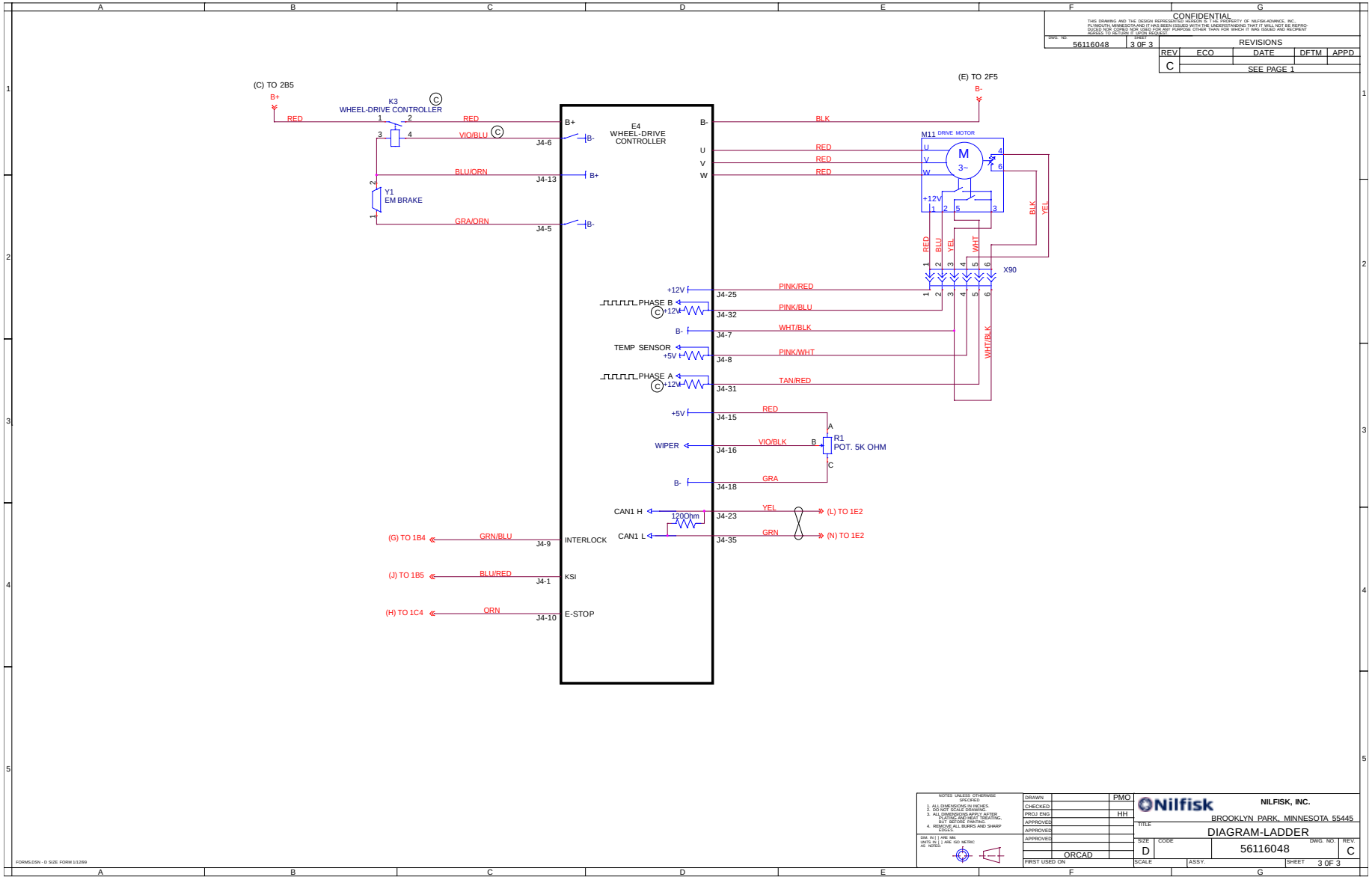

Wiring Harness Diagram

Drawing: 56116049 Rev A, (Sheet 1 of 2)

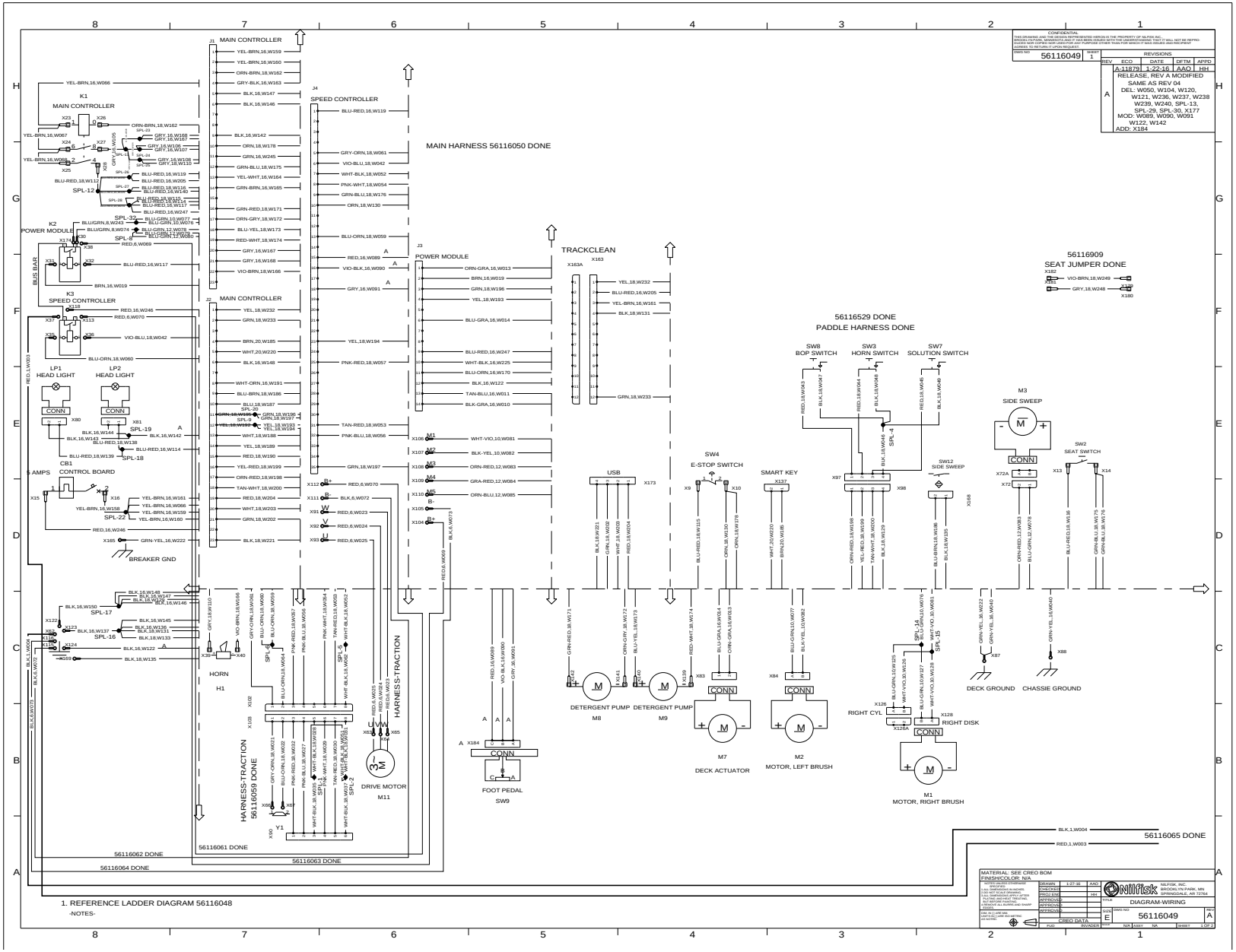

Wiring Harness Diagram (continued) Drawing: 56116049 Rev A, (Sheet 2 of 2)

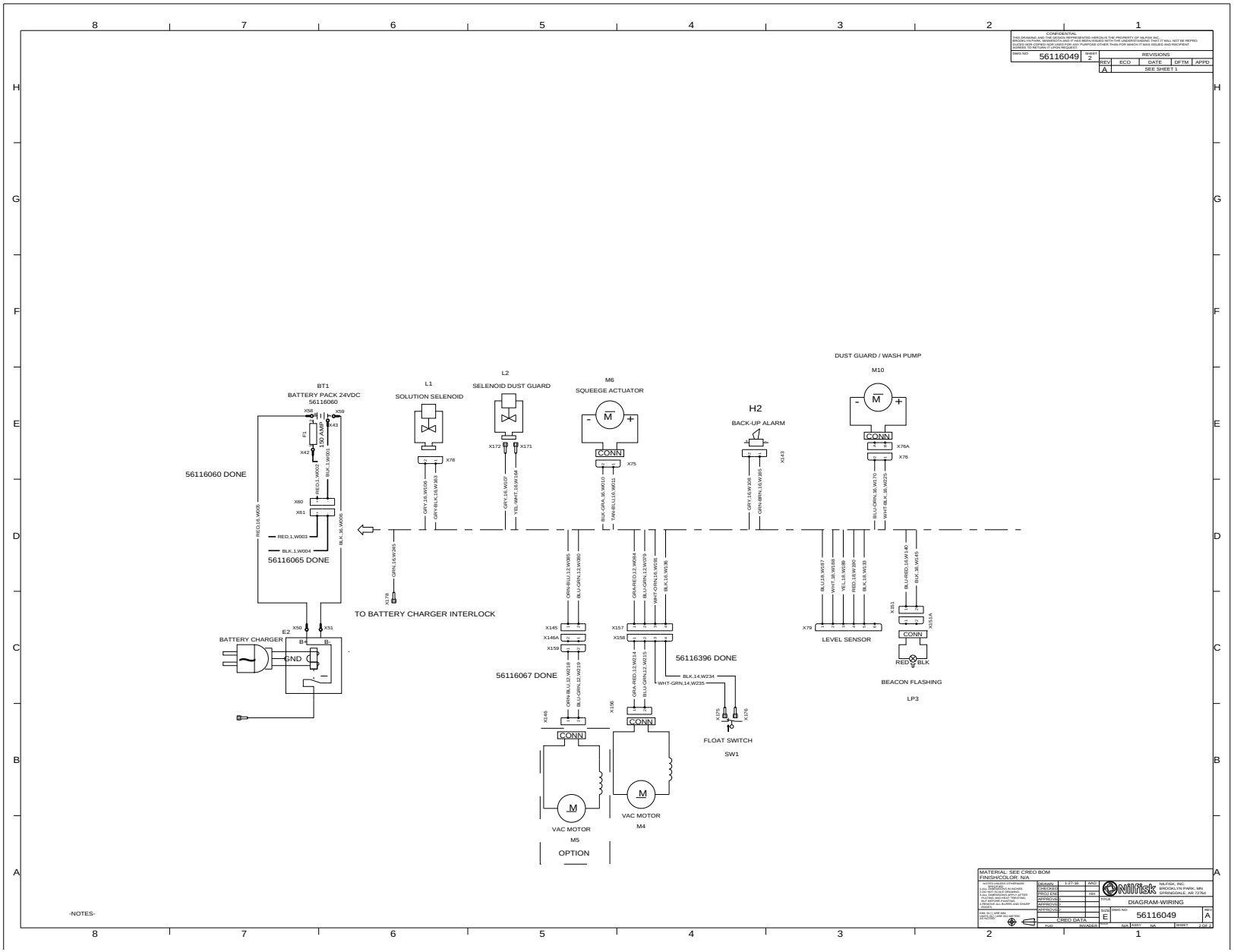

30 - Solution System

Functional Description

The SC6000 solution tank is incorporated directly into the main body of the machine. A series of 4 float switches serves as a level indicator for the amount of solution in the tank. The outlet of the tank has a manual shutoff valve so that components can be serviced without solution flowing out of the tank. Just downstream from the shutoff is a filter element to prevent debris from entering other components of the system.

The supply hose leads to the scrub deck, where the solution solenoid meters fluid delivery. The supply hose is a specially molded tube that also contains fittings for the optional EcoFlex detergent inlet and the option pump outlet for either wash hose or dust control pumps.

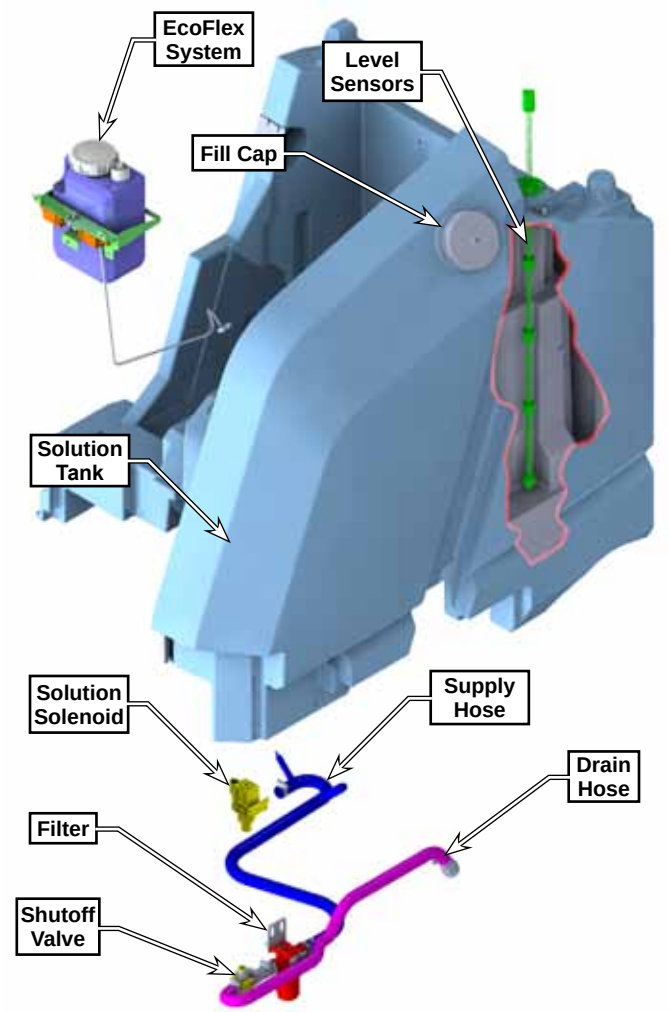

Shutoff Valve

A bidirectional shutoff valve permits the solution flow to be shutoff, directed toward the scrub deck, or directed toward the drain hose. The flow is off when the handle is perpendicular to the body. When the handle is parallel to the body, it could be pointed either way, so it is best to confirm the desired position.

Solution Solenoid

The solution solenoid is located downstream from the solution filter, and activates to allow solution to flow to the scrub deck. To prevent pooling of excess water on the floor when the machine is stationary, the solenoid output from the controller is disabled when the wheel drive is not active. The rate of solution flow is controlled by cycling the solution solenoid on and off at varying duty cycles.

Solution Level Sensors

Even though the solution level sensor is a single physical component, it is internally comprised of 4 independent reed switches and floats. Each float has a magnetic ring that activates the reed switch when it is in proximity to the switch. All 4 switches have a common ground, but they each have their own independent return wire back to the main controller.

As an assembly, the floats and reed switches operate in the Normally-Closed configuration (fluid-wise), but the reed switches themselves are configured as Normally-Open if the float was completely missing. If no fluid is present to raise the float, then the float's magnetic ring lines up with the reed switch, and the switch is active and closed.

Wash Hose Option

The wash hose option uses an on-demand fluid pump at the rear of the machine to drive pressurized water to the flexible wash hose. The pump itself monitors the output for fluid flow by pressure drop, and activates when the operator uses water. The inlet to this pump is in the solution hose, but upstream from the solution solenoid. The Dust Guard option cannot be added to a machine that has wash hose.

Dust Guard Option

The Dust Guard option is available only on cylindrical machines with side sweep. A water mist is sprayed in front of the side broom, and controlled by a solenoid just above the broom. The option pump at the rear of the machine pressurizes the water. The wash hose option cannot be added to a machine that has Dust Guard.

EcoFlex Option

Machines that have the EcoFlex option have on-board detergent mixing using a pump-driven detergent injection system. The detergent is stored in the removable detergent tank below the operator's seat, which has a suction hose from the detergent pumps. The detergent pumps draw the liquid from the detergent tank and inject it into the solution line before the solution solenoid. The flow rate of the detergent is controlled by the Main Machine Controller using PWM.

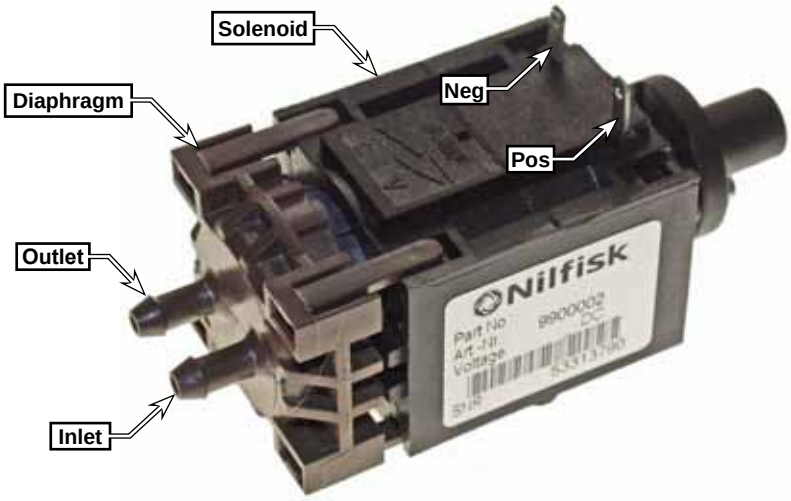

There are two detergent pumps that operate in parallel to deliver detergent to the scrub deck. Each pump uses a solenoid-driven diaphragm with one-way check valves. As the solenoid oscillates in and out, it drives a flexible diaphragm that draws fluid in during the retraction stroke, and drives fluid out during the compression stroke. The check valves allow fluid to enter only though the inlet port, and exit only through the outlet port.

Unlike an AC solenoid that moves its plunger the same direction regardless of the electrical polarity, a DC solenoid changes its direction of travel depending on the electrical polarity of the coil. Even though the EcoFlex pumps use DC solenoids, they still contain a mechanical return spring to return the plunger to its relaxed state when no power is present.

In many other machines, the solenoid is actively driven in only one direction (usually intake), but passively returned via the return spring (usually exhaust). For higher flow rates, the SC6000 machine uses AC-Driven, Active-Return solenoid pumps. So even though the return spring already wants to "Passively" drive the plunger outward, the Main Machine Controller "Actively" pushes the plunger back out. So in effect, the pumps are DC solenoids driven by an AC square-wave signal.

In the forward-bias direction, with positive-to-positive and negative-to-negative, as shown above; the solenoid plunger retracts away from the diaphragm. This results in a suction at the inlet port, and fluid is drawn into the cavity caused by the diaphragm.

If voltage is simply removed at this point, the return spring will passively push the plunger forward, and the spring pressure will push the fluid out of the outlet port. However, if the solenoid is reverse-biased with positive-to-negative and negative-to-positive, the plunger is actively pushed forward with a greater force than what the spring alone can impart. Because this is the compression stroke of the diaphragm, the pump can pump faster/harder against any resistance of the outlet tubing. This active-return also permits the pump to operate at a higher PWM frequency for higher flow rates.

One thing to note about troubleshooting any solenoid driven pump, is that if the solenoid is already in its relaxed (compression) stroke, energizing the coil in the reverse-bias direction will not give any outward appearance that the solenoid was activated, because it is already driven in that same direction. So if manually powering the coil, make sure to check both polarities before concluding whether the solenoid has failed or not.

Operational Mode Prerequisites

Before the main controller can activate any of the operational modes, it must first check that the appropriate prerequisites are met.

- **Solution System Outputs**
  - Solution Solenoid L1 –
    - Scrub system active
    - No solution solenoid fault
    - No recovery system fault (vac motors and squeegee)
    - Throttle command not equal to zero
    - No Estop inhibit
    - No impact lockout inhibit
    - No low voltage cut out inhibit (first or second stage)
    - No RTF inhibit
    - Not turned off with the membrane switch
    - Not momentarily turned off by the solution timed off paddle switch input
  - Spray wash pump M10
    - No spray wash pump M10 fault
    - Solution tank is not empty
    - Option (Opt) pump in configuration menu set to “Spray Wash”
- **Detergent System outputs**
  - Detergent Pumps M8 and M9
    - Solution system is active
    - EcoFlex is enabled in the configuration menu
    - Not turned off with the control panel detergent switch

Troubleshooting

Level Sensors

Use the Service Mode display (shown below) to observe the states of the 4 level sensors.

Symptom: All of the sensors show full even though the tank is empty.

- Because all 4 sensors are showing failure, the most likely cause is a broken ground wire.

Symptom: All of the sensors show empty even though the tank is full.

- Because all 4 sensors are showing failure, the most likely cause is the wire connector is disconnected.

Symptom: One sensor always shows empty, regardless whether the tank is empty or full.

- Check for a short to ground in that sensor wire.
- Check to make sure the sensor float is not stuck or fouled.

Symptom: One sensor always shows full, regardless whether the tank is empty or full.

- Check for an open circuit in that sensor wire.
- Check to make sure the sensor float is not stuck or fouled.
- Slowly drain the tank and watch for a sensor transition as the water level approaches that sensor float. If you see a full-empty-full sensor transition, then the lower C-clip has slipped and the sensor float is too low.

Symptom: One sensor shows empty when the tank is full, AND full when the tank is empty.

- Both C-clips for that float are too low.
- If this is the result of removing and replacing that float, you may have turned the float upsidedown, making the C-clips out of position. (The magnetic ring is toward the top of the float.)

Resetting a Float Position

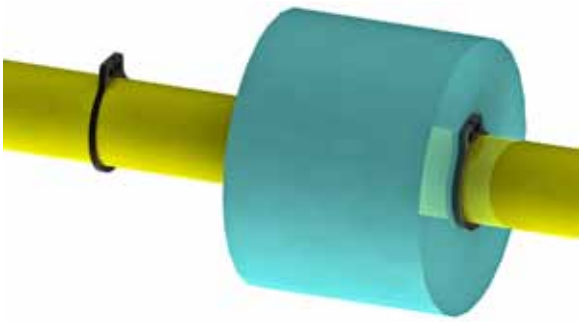

Each of the floats are limited in their position by a pair of C-clips. If these clips slip out of position, the sensor won't function properly. The position of the lower C-clip is the more critical of the two, and the upper C-clip just needs to permit ample travel.

1. With the sensor removed but still connected to the machine, use service mode to view the 4 level sensors.
2. As necessary, slide one or both C-clips away from the sensor position so you can move the float back and forth past the sensor position.
3. Starting from below, slide the float up until the sensor registers 1 on the display. Mark the main rod below the float at this position.
4. Starting from above, slide the float down until the sensor registers a 1 on the display. Mark the main rod below the float at this position.
5. Position the lower C-clip between your two marks.
6. Position the upper C-clip about 1½" (40mm) above the lower clip.

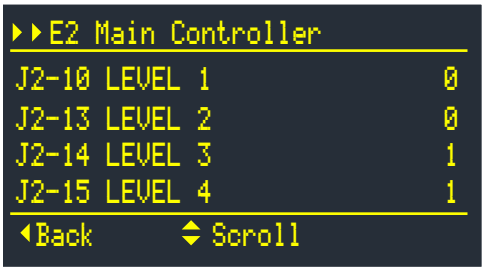

Detergent Pumps

- If the pumps appear to be operating (by touch or sound), but no fluid is flowing, it's likely the diaphragm is damaged and the pump needs replacement.
- If neither pump is working, make sure the machine is properly configured for the EcoFlex option in the controller.
- If only one pump is working, swap the pump wires (pump 1 for 2) according to the wire color codes shown on page 84.
  - If the same pump remains faulty, then you know the pump is faulty.
  - If the other pump becomes faulty, then you know that the fault lies in the wiring between the pump and the controller.

Removal and Installation

Solution Solenoid

The solution solenoid is located in the center of the scrub deck on the rearward side of the deck. If the purpose for servicing the solenoid is to clean the valve seat, you may choose to separate the top and bottom while still in the machine, as described in step 5.

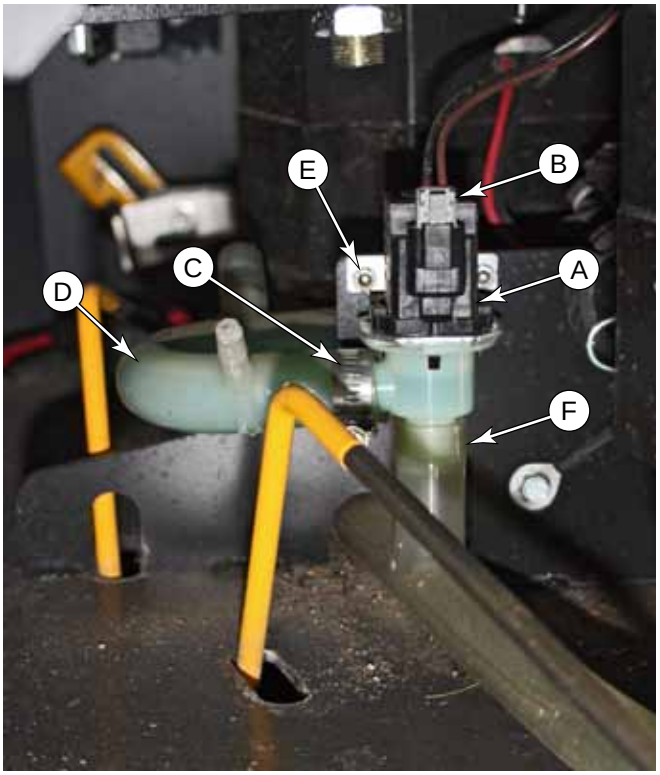

1. Close the manual shutoff valve located at the front-right side of the solution tank.
2. Disconnect the electrical connector **(B)** from the top of the solenoid.
3. Loosen the hose clamp **(C)** and remove the solution supply hose **(D)** from the solenoid inlet.
4. Remove the two screws **(E)** that secure the solenoid to the scrub deck frame, and lift the solenoid upward to remove it from the outlet hose **(F)**.
5. If necessary, separate the upper and lower halves of the solution solenoid by twisting the upper half counterclockwise. This permits cleaning of the valve seat.

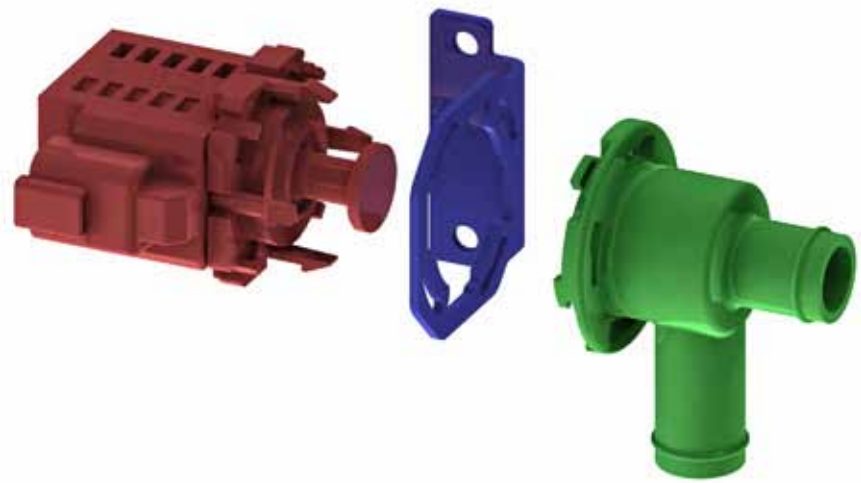

Detergent Pumps

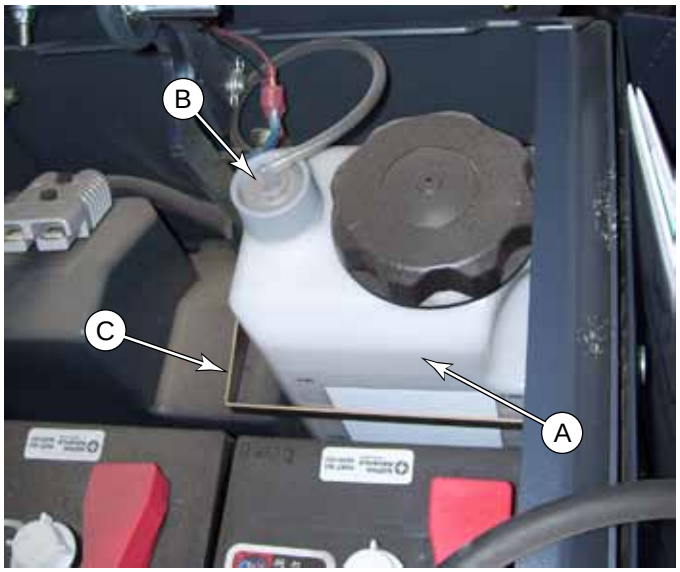

The detergent pumps are located below the operator's seat in front of the EcoFlex bottle. Because the pumps are located behind the bottle's support bracket, you will find it easier to remove the bracket to access the pumps.

1. Remove the feed tube **(B)** from the detergent bottle **(A)**, and remove the bottle from the bracket **(C)**.
2. The EcoFlex bracket is secured to the front of the battery compartment with 3 nuts on welded studs. Remove the nuts and washers, and slide the bracket off the studs.
3. Remove the outlet tube **(D)** that passes down to the scrub deck, from the Y-fitting **(E)** between the pumps. Leave the feed tube **(B)** in place, so you know which Y-fitting is the inlet and outlet.

Note: *Even if both pumps are being replaced, it is best to work on one pump at a time to avoid confusing the wires or crossing tubes.*

4. Disconnect the wires to the affected pump. Make note which wire was connected to which terminal for replacement. If you are unsure during replacement, use the color codes and polarity identification shown below:

	Positive	**Negative**
Pump 1	Green/Red	Orange/Gray
Pump 2	Blue/Yellow	Red/White

5. Remove the two screws and washers that secure the pump to the bracket, unplug the plastic tubes, and remove the pump.

During replacement, note the electrical and fluid polarity as shown below to the left, and the tube crossover, as shown to the right.

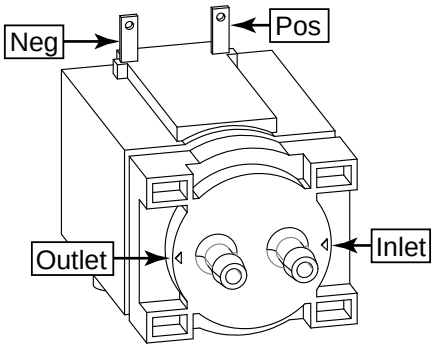

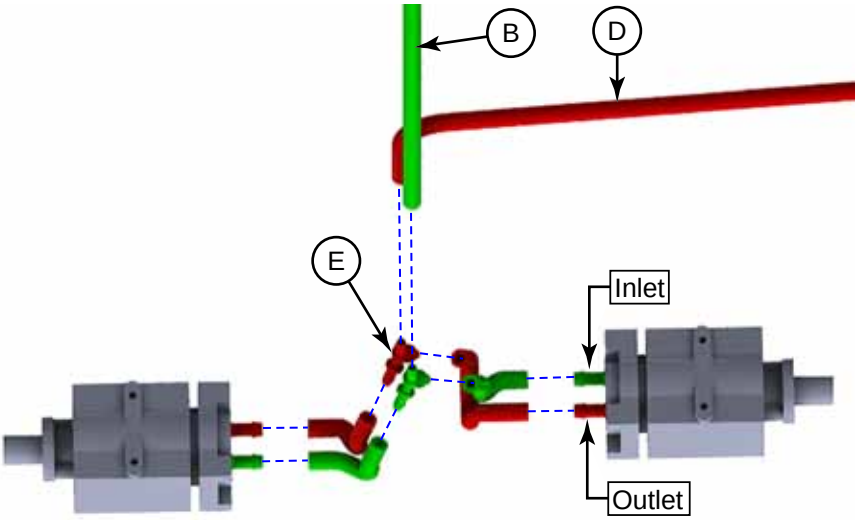

Specifications

Parameter	Range
Solution Solenoid Resistance	• 108 Ω
Maximum Solution Flow	• 6 L/Min, unrestricted

34 - Scrub System, Disc

Functional Description

The disc deck is available in a 36-inch and 40-inch size. The deck uses two, gear-reduced, drive motors to drive the two brush or pad holder discs. The scrub deck is raised and lowered using a leadscrew actuator.

The deck also includes two removable side squeegees that help keep the scrub water contained within the path of the scrub deck, and subsequently within the rear squeegee path.

Deck Lift Actuator

The deck lift actuator controls the raising and lowering of the deck, as well as the amount of pressure the scrub disks apply to the floor.

To extend or retract the actuator, the power module reverses polarity to the actuator. The actuator determines how long it should run to reach full extension or retraction. It accomplishes this with a pair of cams, limit switches, and diodes.

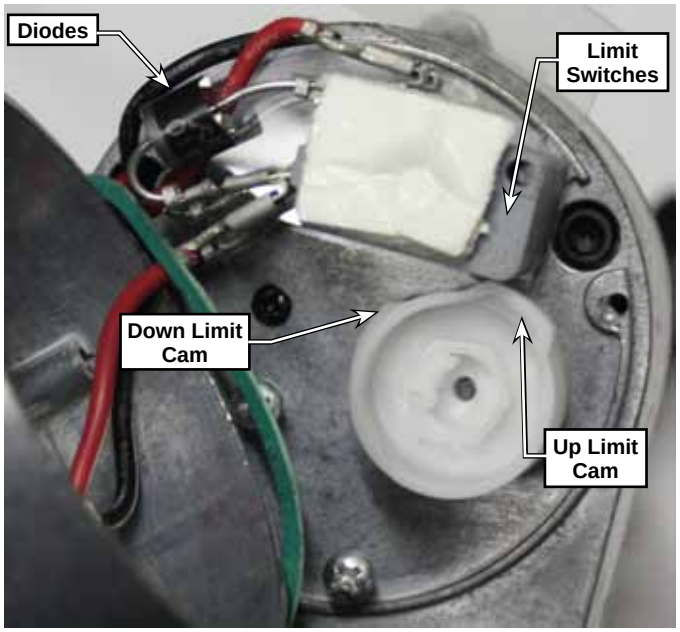

As each cam rotates, it opens the normally closed circuit and stops the motor's rotation. However each cam is functional only for its intended direction of rotation. This is accomplished with the diodes, which effectively short circuit the switch for one direction (polarity), but not the other.

In the diagram below, the clockwise cam/limit switch is effectively short circuited by its diode when the electrical polarity is driving the motor in the counterclockwise direction (and vice versa for the CCW). But the counterclockwise cam is not short circuited, so it will open the motor circuit when the cam lobe reaches the limit switch.

The down-limit cam isn't adjustable, but by adjusting the position of the up-limit cam, the actuator can control its length of travel for the leadnut along the leadscrew.

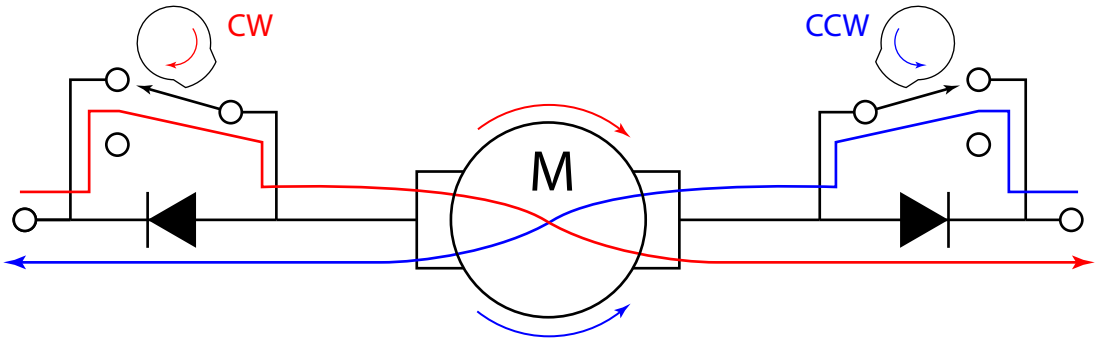

Scrub Control

Scrub pressure is controlled by monitoring the motor amperage from both brush motors. If the combined brush motor current is below its target amperage, the deck is lowered slightly to increase brush pressure. If the combined amperage is above the target amperage, the deck is raised slightly. Additionally, if either one of the motors is operating above its maximum allowed amperage, the deck is raised.

The motor amperage is sampled every 250ms, but adjustments are made only at 45 second intervals to filter out minor variations in the floor. The instantaneous amperage readings are averaged for the 45 second interval.

Deck Type	Floor Type	Scrub Level	Min Amps	Max Amps
34D 860D	Standard	Low	20	30
		High	30	40
		Extreme	40	50
	Smooth	Low	15	25
		High	25	35
		Extreme	35	45
	Individual Motor Max		25	
40D 1050D	Standard	Low	20	30
		High	30	40
		Extreme	40	50
	Smooth	Low	15	25
		High	25	35
		Extreme	35	45
	Individual Motor Max		25	
36C 910C	Standard	Low	20	30
		High	30	40
		Extreme	40	50
	Smooth	Low	15	25
		High	25	35
		Extreme	35	45
	Individual Motor Max		25	

Operational Mode Prerequisites

Before the main controller can activate any of the operational modes, it must first check that the appropriate prerequisites are met.

- **Scrub System Outputs**
  - Brush Motors M1 and M2 or Deck Actuator M7 (seat switch must be closed to enter scrub mode)
    - No scrub system fault (brush motors and actuator motor)
    - No recovery system fault (vac motors and squeegee)
    - Throttle command not equal to zero
    - No Estop inhibit
    - No impact lockout inhibit
    - No low voltage cut out inhibit (first or second stage)
    - No RTF inhibit

Circuit Overview

The brush motors are powered from the power module. The power module controls the K2 relay, which provides battery+ power to the motors. The power module then applies PWM control to the negative side of the motor, including soft-start at startup. The power module monitors the health and performance of the motors and reports this information back to the main controller. The optional side sweep motor is controlled in the same manner.

The deck lift actuator is powered from the power module, which needs to reverse the polarity to this motor in order to raise and lower the deck in very small amounts to maintain pressure. The signal from the controller is reversible Pulse-Width Modulated (PWM).

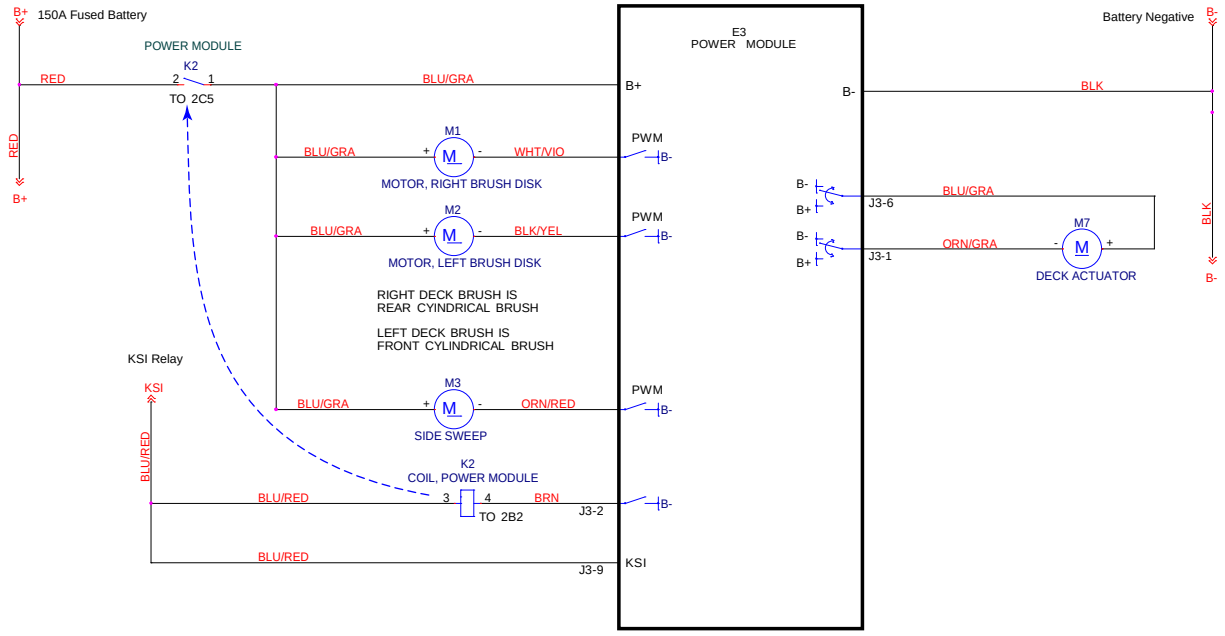

Maintenance and Adjustment

Lift Actuator Limit Adjustment

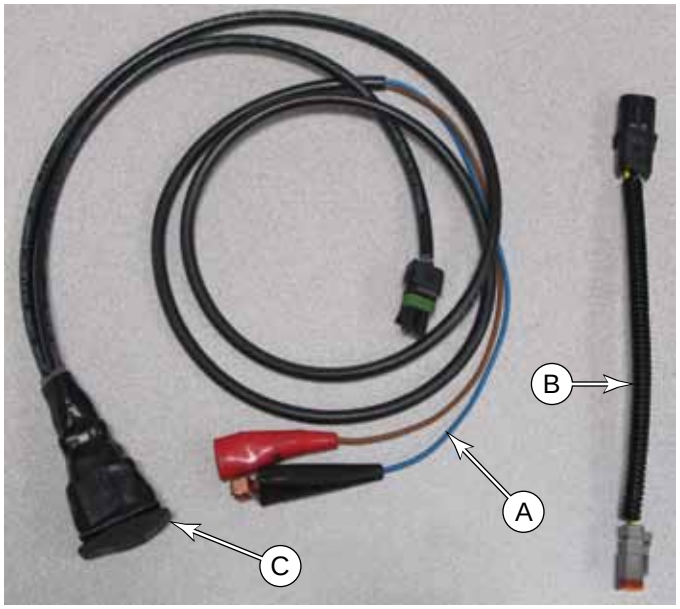

The power module commands the actuator to raise or lower, but the actuator itself determines when it should stop moving. This is accomplished by two cam lobes and two micro switches (limit switches). The lower cam is not adjustable, so the lower limit is adjusted by rotating the leadscrew nut. Then the upper limit is adjusted by turning the cam lobe until the actuator stops at the correct height.

To make the adjustment, you will need to manually power/control the actuator. If you don't have the Actuator Test Kit described on page 125, you can use the Deck Lift Output Test described on page 33. Just note that if you use the Output Test, you may periodically cause a controller fault, and have to reset the machine. For simplicity, this procedure is written for the test kit method.

This procedure is typically performed as part of replacing the actuator. If the actuator is not already removed from the machine, then remove it following the procedure on page 98.

1. Connect the tester **(A)** to the positive and negative terminals of the battery. (The full 36 volts must be used. Otherwise the motor speed will be too low and the results will be skewed.)
2. Using the adapter plug **(B)**, connect the tester to the actuator.
3. While preventing the actuator leadnut **(E)** from turning, use the switch **(C)** to extend the actuator until it stops.
4. Manually unscrew the leadnut **(E)** until there is at least 2.5" (60mm) distance between the leadnut and housing **(F&G)**.
   - The actual distance isn't import, so pick a number that is easy to work with.
   - Record this distance.

CAUTION: If while retracting the actuator with the "Output Test", it appears the leadnut is going to crash into the actuator housing, let go of the leadnut and let it spin.

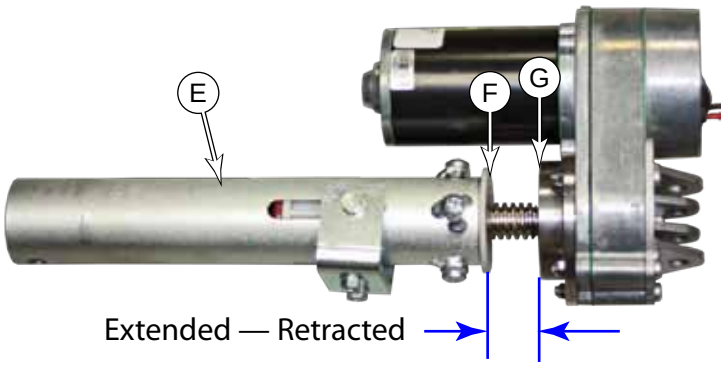

5. While preventing the actuator leadnut **(E)** from turning, use the switch **(C)** to retract the actuator until it stops.
6. Measure the distance between the actuator gearbox at **(G)** and the top of the leadnut at **(F)**, and subtract it from the previous distance. This is the travel.
   - **The target travel is: 2.22 ± 0.09" (56 ± 2 mm)**
   - If the target travel is off, adjust it as described below.

Adjusting Travel

If the leadscrew travel needs to be adjusted, complete the steps below. Otherwise, skip down to Setting the Leadnut Position.

7. Remove the dust cap from the top of the actuator covering the adjustment cam.
8. Using a 1/2” socket, turn the adjustment cam:
   - Turn the cam only a couple of clicks at a time before rechecking the result.
   - Each click of the cam represents about 2mm of leadnut travel.
   - Turn the cam clockwise to raise the leadnut and increase the travel distance.
   - Turn the cam counterclockwise to lower the leadnut and decrease the travel distance.
   - **The target travel is: 2.22 ± 0.09” (56 ± 2 mm)**
9. After adjusting the cam, cycle the actuator and recheck the travel distance.

Setting Leadnut Position

After the leadscrew travel has been set, it is necessary to adjust the final position of the leadnut. You will notice that the leadnut position is less than the leadscrew travel. In the retracted position, the leadnut should be bottomed out and the spring slightly compressed.

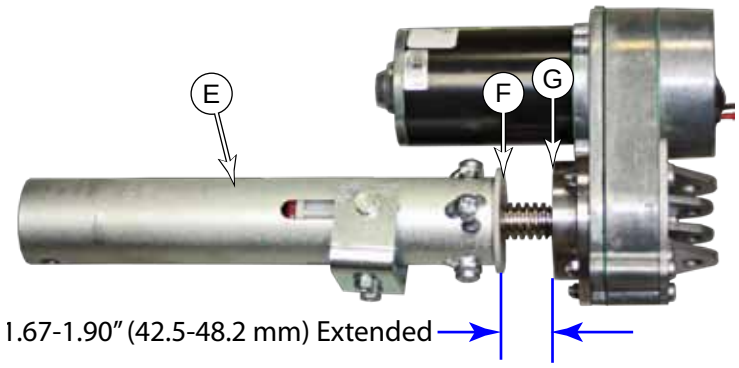

10. Extend the actuator until it stops.
11. Manually turn the leadnut until the leadnut distance is 1.67 to 1.90 inch (42.5 to 48.2 mm).
12. While holding the leadnut from turning, cycle the actuator to confirm its motion.
13. After the adjustment is complete, make sure the leadnut does not turn while you are reinstalling the actuator.

Troubleshooting Notes:

- If the actuator will neither raise nor lower, then both cams are activating their limit switches at the same time.
  - Rotate the cam clockwise several clicks.
  - **Do not hold the nut**, and raise and lower the actuator until it cycles normally again.
  - Go back and restart the adjustment with the extended limit adjustment.
- If you are using the “Output Test” method, and the main machine controller sees the actuator go active again after being stopped on a limit position, the controller will issue an error, and need to be reset. This may occur when you are turning the cam clockwise.

Removal and Installation

Scrub Deck Doors

The scrub deck doors are removable for easier access to any of the components under the machine. To prevent the doors from coming off while the machine is in use, the hinges can't be separated unless the doors are open at least half way.

To remove the door, open it about 45 degrees and lift it off the hinges.

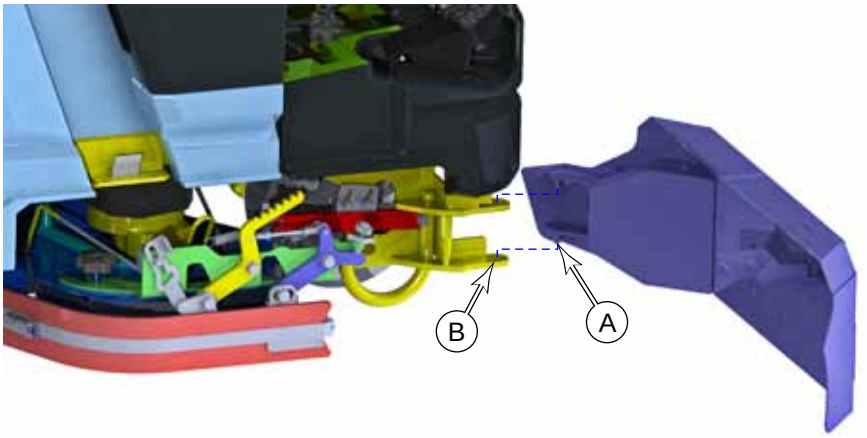

Side Squeegees

The side squeegees can be removed from the scrub deck for maintenance or easier access to the deck components.

1. Loosen the rear thumbscrew **(A)**.
2. Slide the squeegee forward, and then to the side to remove the assembly.

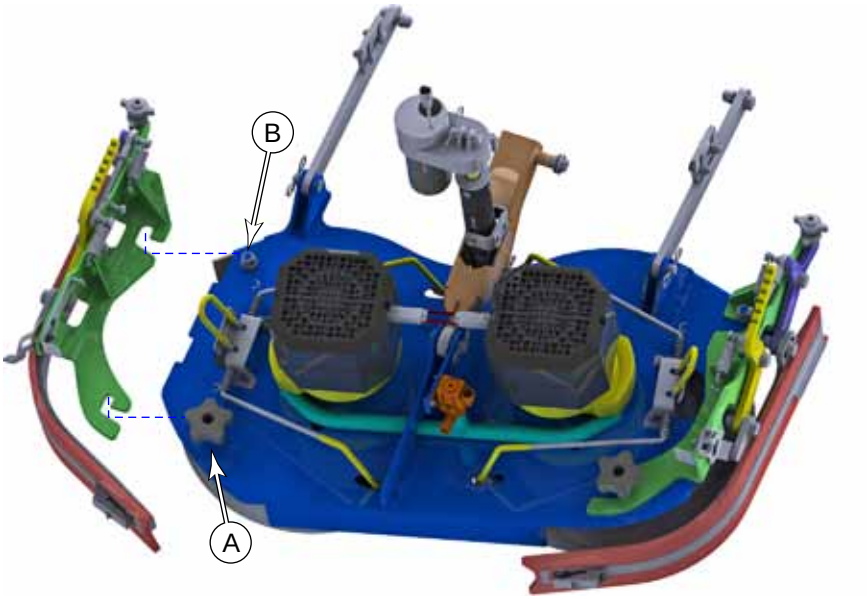

Scrub Deck

Removing the scrub deck is a prerequisite to completing other procedures, such as servicing the brush motors. The procedure is the same for all 3 scrub deck types.

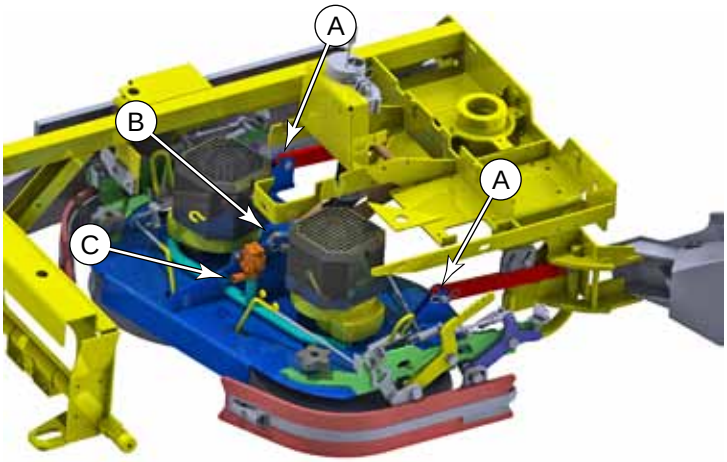

1. For easier access, you may choose to remove one or both Scrub Deck Doors described on page 96.
2. Remove both Side Squeegees described on page 96.
3. If available, position a furniture dolly, mechanic's creeper, or similar wheeled platform below the scrub deck to make it easier to roll the deck out from under the machine.
4. Lower the scrub deck to a neutral position. Refer to the Deck Lift Actuator described on page 98 for different options to complete this, including if the actuator cannot be powered.

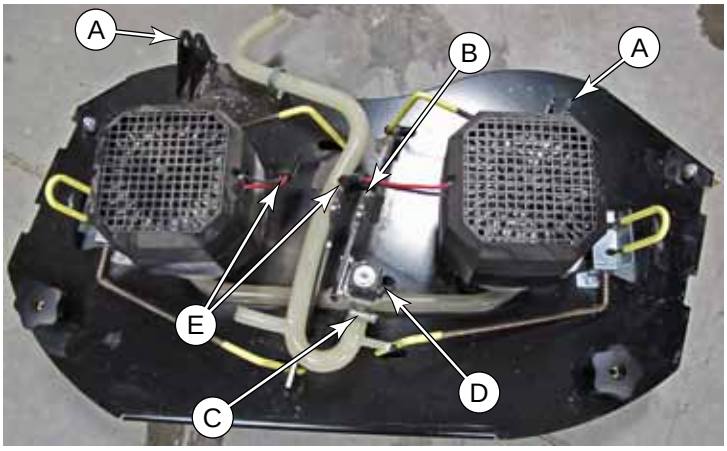

5. Loosen the hose clamp and remove the solution line from the solution solenoid **(C)**. (If the machine is not equipped with either EcoFlex or the wash hose option, you could remove the solution hose back at the solution filter, if preferred.
6. Disconnect the solution solenoid connector **(D)** from the solenoid.
7. Disconnect the scrub brush motor power connectors **(E)**
8. Remove the forward link arm retaining clips and pins **(A)** from the scrub deck. You may wish to tie up the link arms to prevent them from getting caught when you slide the deck out.
9. Remove the retaining clip and pin from the deck lift linkage **(B)**.
   - Access to the pin is easiest from either the left-front or right-rear of the scrub area.
   - After the pin is removed, you may wish to raise the lift actuator to keep it out of the way as you slide the deck in or out from the machine.
10. Slide the deck toward the rear of the machine so the deck lift linkage will clear the left brush motor, and then slide the deck out from the right side of the machine.

Note: *During replacement, note that there are two right brush motor connectors, depending on whether the machine uses a cylindrical or disk deck.*

Deck Lift Actuator

Getting Neutral Weight on the Deck

In order to remove the deck actuator pivot pins, you will need to take the weight off the deck.To do this, you either need to lower the deck to the floor, but stopping before the actuator applies normal scrub pressure; or support the deck in its raised position.

- The easiest way to do this is with the actuator test cable described on page 94. This permits the deck to be moved in small increments, as needed.
- If you don't have an actuator test cable, the next best method is to lower the deck normally, press the E-Stop button, disconnect the battery, and then slightly jack the front of the machine just enough to take the pressure off the deck.
- If the deck actuator cannot be powered, or cannot be operated for any reason, then the best solution is to support the deck as described below:
  a. Using a floor jack or similar method, raise the front of the machine slightly.
  b. Apply blocking, cribbing, or a wheeled dolly (if necessary) below the scrub deck.
  c. Slowly lower the front of the machine until the weight on the retaining pins **(E or F)** becomes neutral, and the pins are free to move.

Note: *For simplicity, the procedure is written for using the actuator test cable.*

CAUTION: Risk of arc flash. Make sure to disconnect the main battery connector when working below the floor panel.

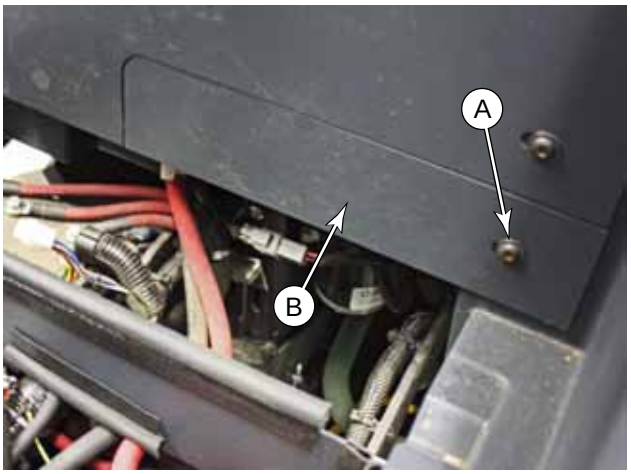

1. If you don't have an actuator test cable, take the weight off the deck as described above. Otherwise, do this at step 6 below
2. Disconnect the main battery cable below the operator's seat.
3. Remove the Floor Panel described on page 71.
4. Remove the screw **(A)** that secures the actuator access cover **(B)** to the side of the battery bay, and lift the cover out toward the right to remove it.

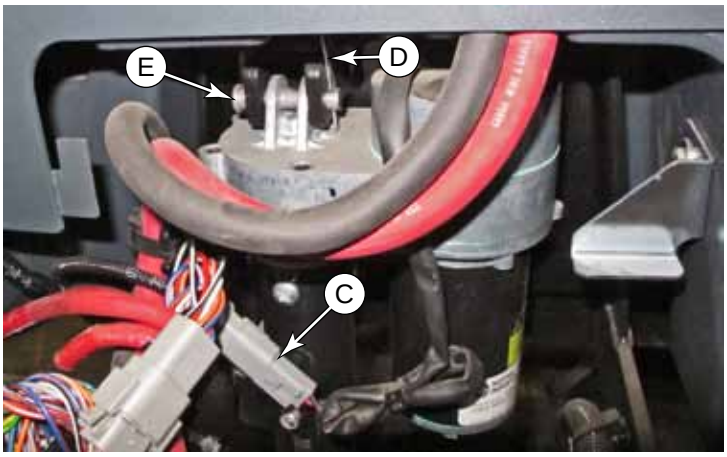

5. Disconnect the electrical connector **(C)** from the actuator.
6. Connect the actuator cable to the test cable as described on page 94, and lower the deck to a neutral weight position.
7. Remove the retaining clip **(D)** and pin **(E)** from the top of the actuator.

8. Remove the lower retaining clip and pin (F) from the actuator.

9. Taking care to not rotate the leadnut with respect to the actuator body, lift the actuator out from above. You may need to rotate the whole assembly clockwise slightly to clear the motor-side of the actuator from the battery bay panel.

10. As necessary, perform the Lift Actuator Limit Adjustment described on page 94.

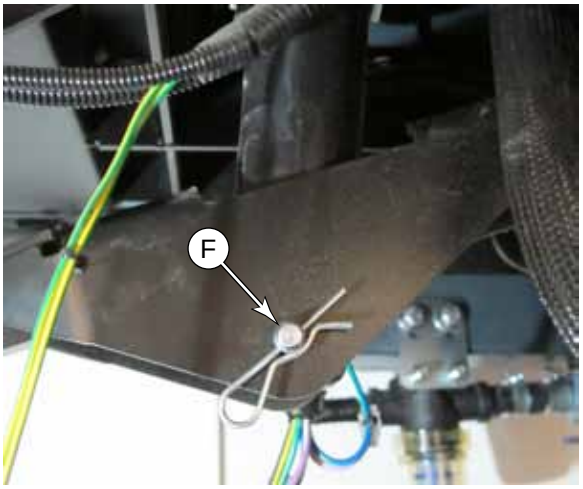

Brush Motor

1. Remove the Scrub Deck described on page 97.

2. Remove the brushes or pad holders from the drive hub.

3. Remove the bolt **(B)** that secures the drive hub to the motor shaft, and remove the hub **(A)**. Take care not to lose the key **(E)** that aligns the hub and shaft.

4. Remove the four bolts **(C)** that secure the motor to the deck, and remove the motor **(F)** and spacer **(D)**.

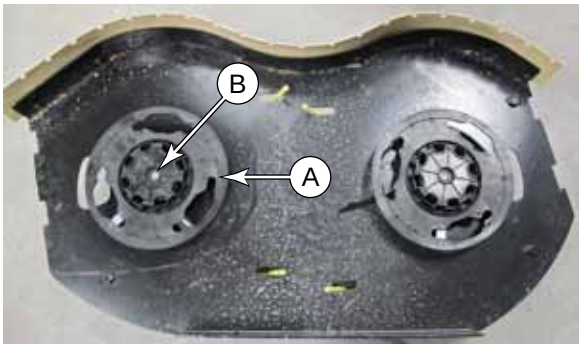

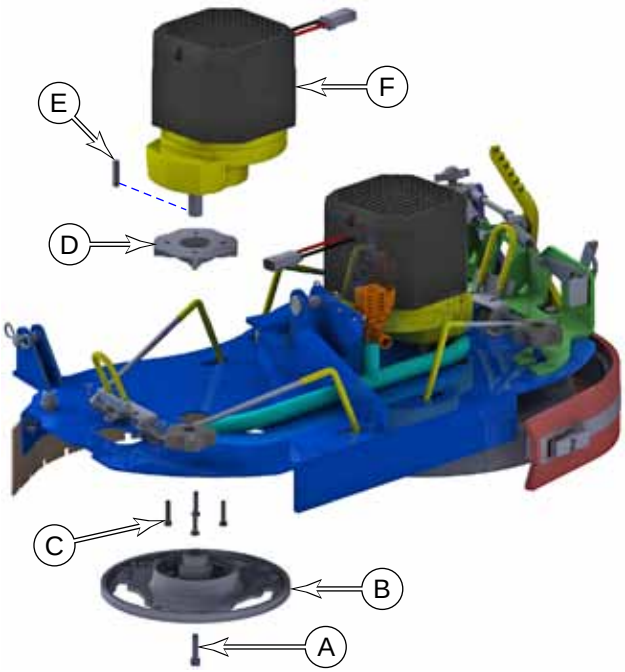

Brush Motor Brushes

There are 4 brushes per motor, and are located toward the top of the motor below the plastic splash cover. Depending on your preferences for level of disassembly, there are three methods for gaining access to the brushes. These options are outlined below. Choose the one that best suits your needs.

- The most straightforward method is to remove the Scrub Deck described on page 97.
- An alternate method is to remove the Brush Motor from the deck without removing the deck. To complete this, you remove the brush hub and motor bolts while the deck is raised, and then lower the deck to remove the motor. The main difficulty with this version is that you may have difficulty removing the brush hub from the motor if they are corroded.
- The last option is to replace the brushes in-place. This can be accomplished by removing the pad holders or brushes, and then lower the deck as far as it will go. The downside to this version is that it may be difficult to reach the 4th motor brush on the far side of the motor.

1. Remove the two phillips head screws that secure the plastic splash cover to the top of the motor.
2. Slowly lift the splash cover off the motor, but make sure to feed the power cable through the cover as you lift it up.
   - If the motor is still in the machine, you will have to flex the cover slightly to get it free from the top of the motor.
   - Once the cover is free from the motor, you can free the motor connector from the cover.
3. Open the draw latch that tightens the access band around the top of the motor.
   - Compress the latch tab toward the main body of the latch, and then rotate the latch away from the band.
   - Take care. When the latch releases, the band is likely to spring loose.

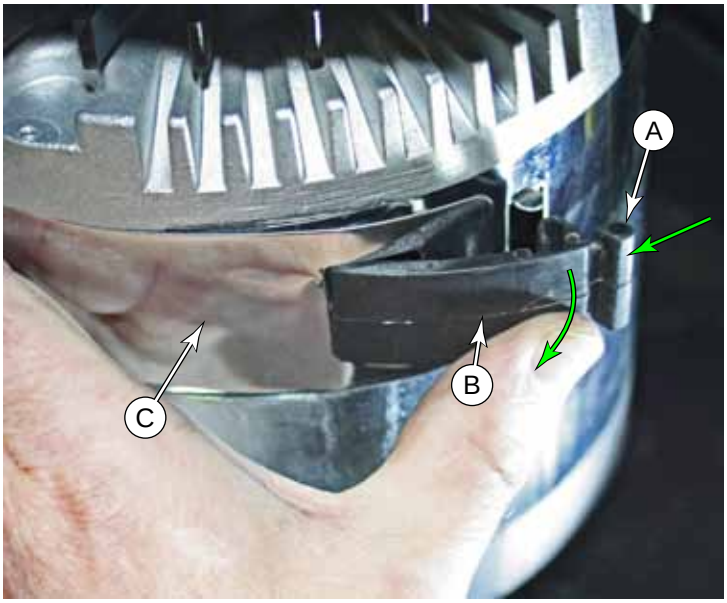

Note: *Gaps in the motor windings are large enough to make retrieval of a dropped screw problematic, especially because they are nonmagnetic stainless steel. To prevent screws from falling in to the motor, you may wish to place a sheet of paper below the brushes to catch any dropped objects.*

Note: *Take care to not bend the electrical contact when loosening the brush wire retaining screw **(E)**. Use a screwdriver **(D)** or some other means to hold the contact from twisting as you loosen the screw.*

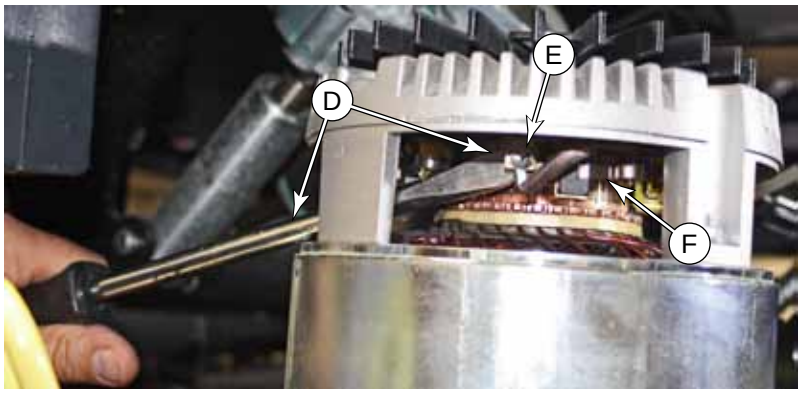

4. Remove the screw **(E)** that secures the brush wire.
5. Gently pull the brush out of the brush holder. Note the position of the return spring **(F)** for later replacement.

6. When replacing the brush with a new one, note the following:
   - The brush wire is toward the top of the motor.
   - You may find it easier to use the brush wire itself to help you hold the screw on the end of your screw driver as you get the screw started in the threads. But the downside is that it may be bore difficult getting the brush into the brush holder afterward.
   - When inserting the brush into the brush holder, use a small hook-type tool to pull the return spring away from the brush.
7. Repeat for the other 3 brushes.

Reassembly notes

1. Wrap the access band around the motor, within the recess between the housings.
2. Note that the larger opening **(G)** overlays the smaller opening **(H)**.
3. Insert the draw latch **(B)** through the larger hole **(G)** and then through the smaller hole **(H)**, as shown.
4. Make sure to position the draw latch **(B)** so it falls within the corner chamfer of the splash cover **(J)**.
5. Secure the draw latch.

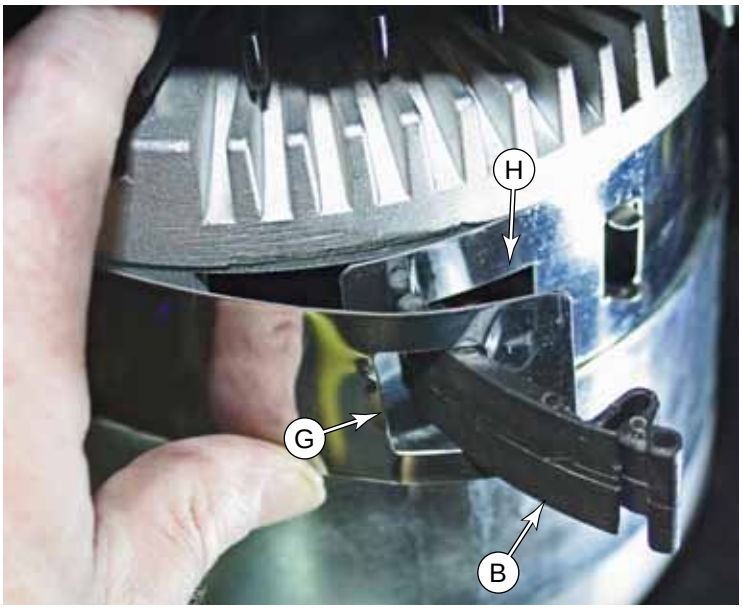

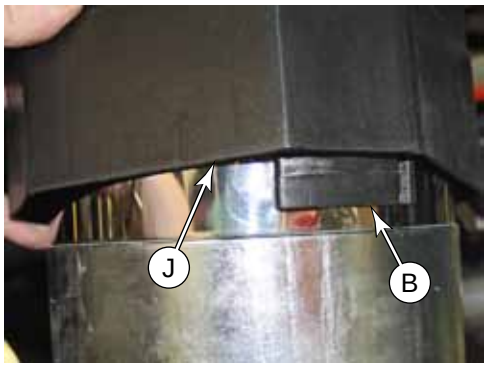

Specifications

Parameter	Range
Brush Contactor Coil Resistance	189 Ω
Brush Motor Amperage	4 amps per motor at 100%
Lift Actuator Amperage	Up: 4.1A initial, then 2.6A Down: 0.9-1.2A

Special Tools

Actuator Test Kit

The actuator test kit (Pn 56407502) is used to manually control an actuator removed from the machine, but powered from a 36-volt battery. It contains alligator clips to connect to the battery, a reversing power switch, and a cable connector. If your test kit is prior to Rev E, you will also need an adapter cable (Pn 56384816) to connect between the tester and the actuator. This adapter cable is included in Rev E and above.

34 - Scrub System, Cylindrical

Functional Description

The cylindrical deck is optimal in environments where floor debris is to be expected during the cleaning process. The cylindrical deck consists of two counter rotating cylindrical brushes for scrubbing the floor, as well as channeling debris up and into a hopper.

The deck also includes two removable side squeegees that help keep the scrub water contained within the path of the scrub deck, and subsequently within the rear squeegee path.

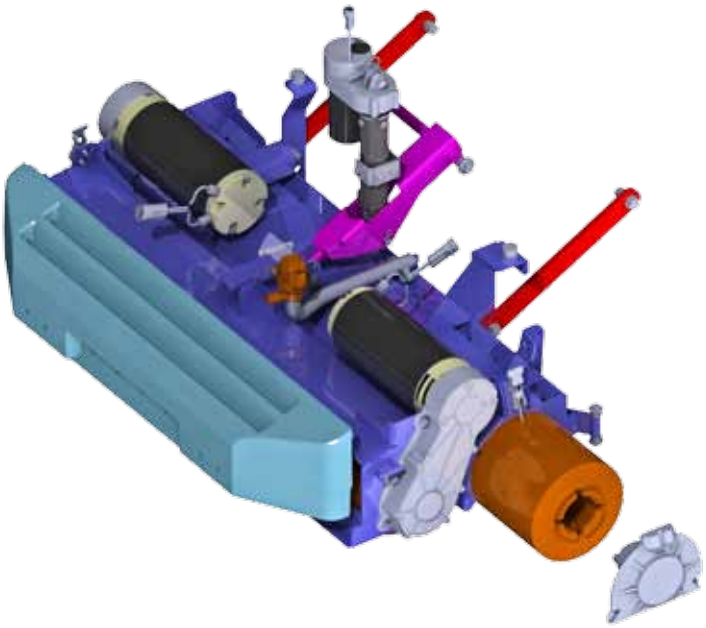

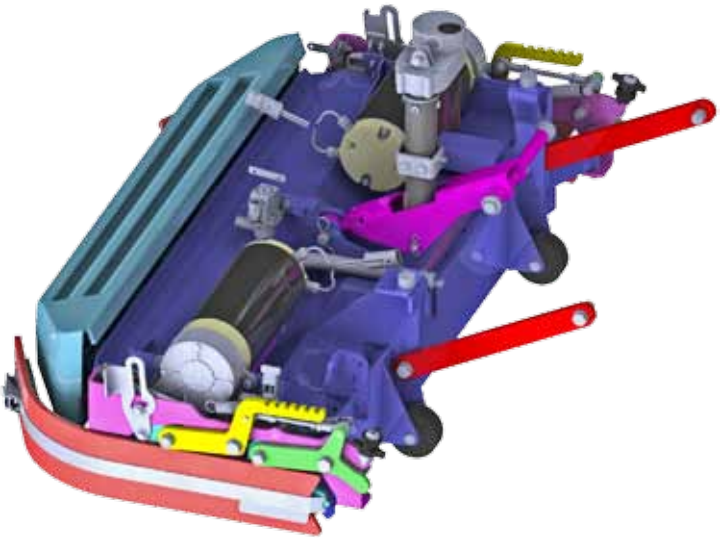

Deck Lift Actuator

The deck lift actuator controls the raising and lowering of the deck, as well as the amount of pressure the scrub disks apply to the floor.

To extend or retract the actuator, the power module reverses polarity to the actuator. The actuator determines how long it should run to reach full extension or retraction. It accomplishes this with a pair of cams, limit switches, and diodes.

As each cam rotates, it opens the normally closed circuit and stops the motor's rotation. However each cam is functional only for its intended direction of rotation. This is accomplished with the diodes, which effectively short circuit the switch for one direction (polarity), but not the other.

In the diagram below, the clockwise cam/limit switch is effectively short circuited by its diode when the electrical polarity is driving the motor in the counterclockwise direction (and vice versa for the CCW). But the counterclockwise cam is not short circuited, so it will open the motor circuit when the cam lobe reaches the limit switch.

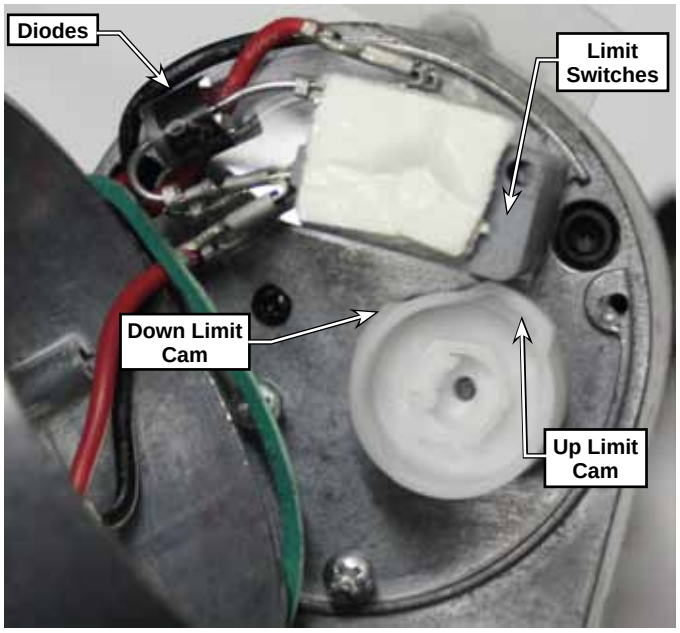

The down-limit cam isn't adjustable, but by adjusting the position of the up-limit cam, the actuator can control its length of travel for the leadnut along the leadscrew.

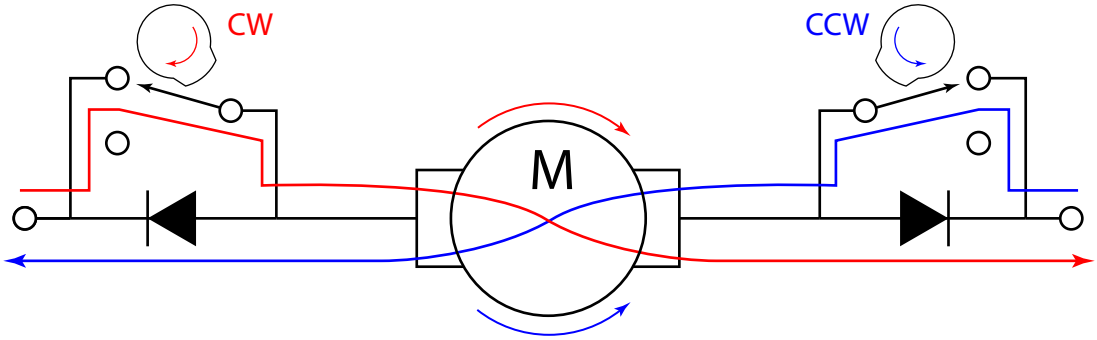

Scrub Control

Scrub pressure is controlled by monitoring the motor amperage from both brush motors. If the combined brush motor current is below its target amperage, the deck is lowered slightly to increase brush pressure. If the combined amperage is above the target amperage, the deck is raised slightly. Additionally, if either one of the motors is operating above its maximum allowed amperage, the deck is raised.

The motor amperage is sampled every 250ms, but adjustments are made only at 45 second intervals to filter out minor variations in the floor. The instantaneous amperage readings are averaged for the 45 second interval.

Deck Type	Floor Type	Scrub Level	Min Amps	Max Amps
34D 860D	Standard	Low	20	30
		High	30	40
		Extreme	40	50
	Smooth	Low	15	25
		High	25	35
		Extreme	35	45
	Individual Motor Max		25	
40D 1050D	Standard	Low	20	30
		High	30	40
		Extreme	40	50
	Smooth	Low	15	25
		High	25	35
		Extreme	35	45
	Individual Motor Max		25	
36C 910C	Standard	Low	20	30
		High	30	40
		Extreme	40	50
	Smooth	Low	15	25
		High	25	35
		Extreme	35	45
	Individual Motor Max		25	

Operational Mode Prerequisites

Before the main controller can activate any of the operational modes, it must first check that the appropriate prerequisites are met.

- **Scrub System Outputs**
  - Brush Motors M1 and M2 or Deck Actuator M7 (seat switch must be closed to enter scrub mode)
    - No scrub system fault (brush motors and actuator motor)
    - No recovery system fault (vac motors and squeegee)
    - Throttle command not equal to zero
    - No Estop inhibit
    - No impact lockout inhibit
    - No low voltage cut out inhibit (first or second stage)
    - No RTF inhibit

Circuit Overview

The brush motors are powered from the power module. The power module controls the K2 relay, which provide battery+ power to the motors. The power module then applies PWM control to the negative side of the motor, including soft-start at startup. The power module monitors the health and performance of the motors and reports this information back to the main controller. The optional side sweep motor is controlled in the same manner.

The deck lift actuator is powered from the power module, which needs to reverse the polarity to this motor in order to raise and lower the deck in very small amounts to maintain pressure. The signal from the controller is reversible Pulse-Width Modulated (PWM).

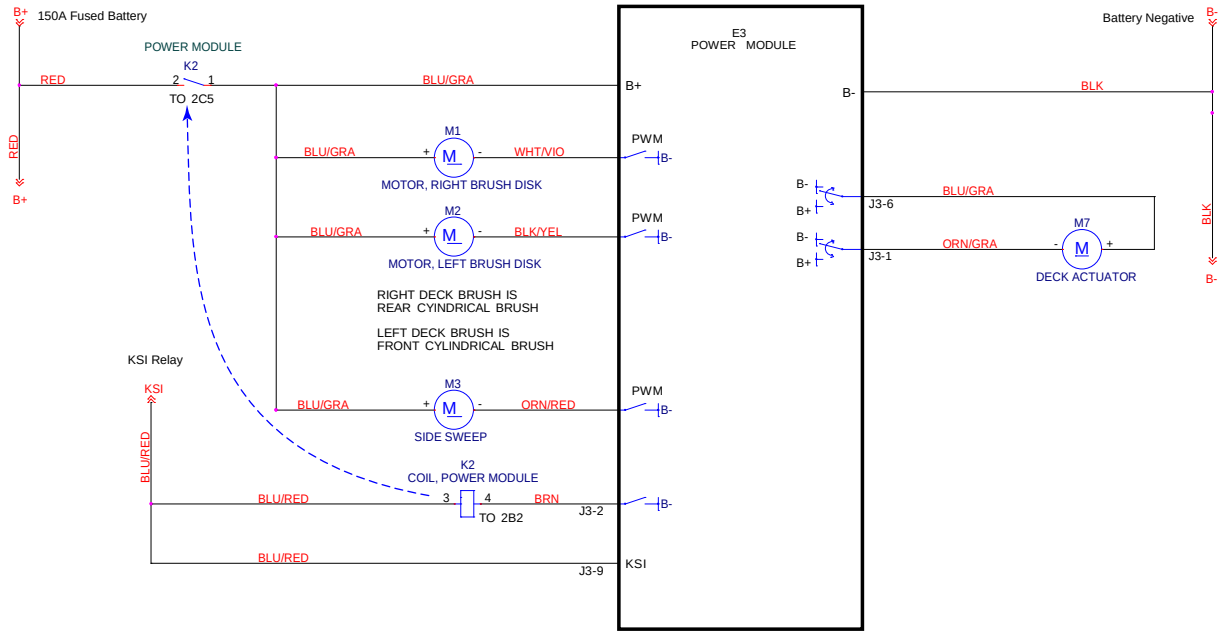

Maintenance and Adjustment

Lift Actuator Limit Adjustment

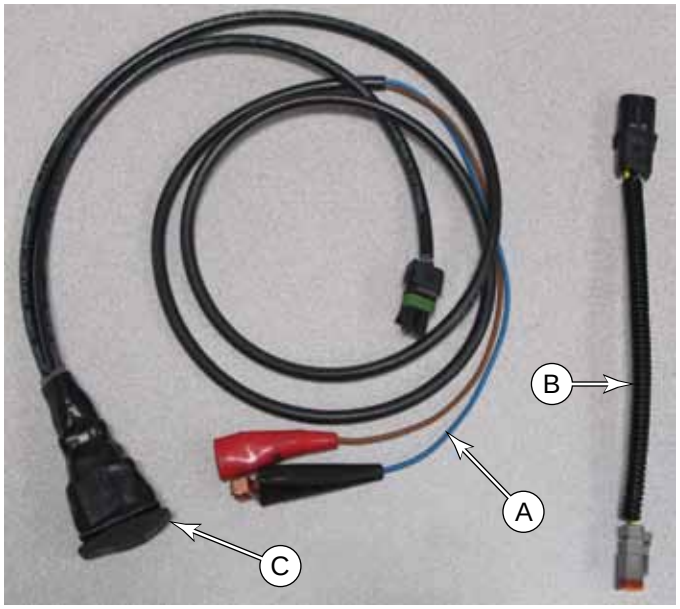

The power module commands the actuator to raise or lower, but the actuator itself determines when it should stop moving. This is accomplished by two cam lobes and two micro switches (limit switches). The lower cam is not adjustable, so the lower limit is adjusted by rotating the leadscrew nut. Then the upper limit is adjusted by turning the cam lobe until the actuator stops at the correct height.

To make the adjustment, you will need to manually power/control the actuator. If you don't have the Actuator Test Kit described on page 116, you can use the Deck Lift Output Test described on page 33. Just note that if you use the Output Test, you may periodically cause a controller fault, and have to reset the machine. For simplicity, this procedure is written for the test kit method.

This procedure is typically performed as part of replacing the actuator. If the actuator is not already removed from the machine, then remove it following the procedure on page 98.

1. Connect the tester **(A)** to the positive and negative terminals of the battery. (The full 36 volts must be used. Otherwise the motor speed will be too low and the results will be skewed.)
2. Using the adapter plug **(B)**, connect the tester to the actuator.
3. While preventing the actuator leadnut **(E)** from turning, use the switch **(C)** to extend the actuator until it stops.
4. Manually unscrew the leadnut **(E)** until there is at least 2.5" (60mm) distance between the leadnut and housing **(F&G)**.
   - The actual distance isn't import, so pick a number that is easy to work with.
   - Record this distance.

CAUTION: If while retracting the actuator with the "Output Test", it appears the leadnut is going to crash into the actuator housing, let go of the leadnut and let it spin.

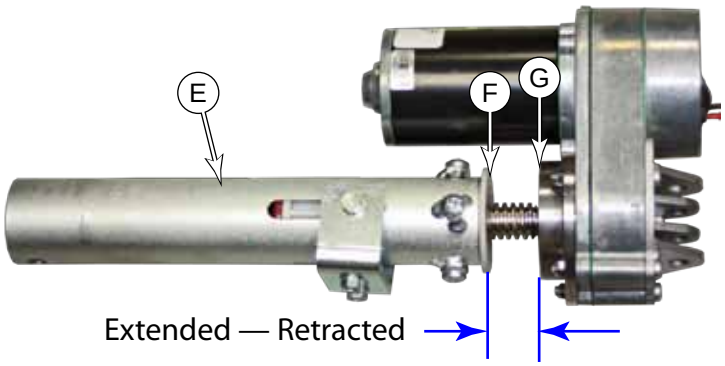

5. While preventing the actuator leadnut **(E)** from turning, use the switch **(C)** to retract the actuator until it stops.
6. Measure the distance between the actuator gearbox at **(G)** and the top of the leadnut at **(F)**, and subtract it from the previous distance. This is the travel.
   - **The target travel is: 2.22 ± 0.09" (56 ± 2 mm)**
   - If the target travel is off, adjust it as described below.

Adjusting Travel

If the leadscrew travel needs to be adjusted, complete the steps below. Otherwise, skip down to Setting the Leadnut Position.

7. Remove the dust cap from the top of the actuator covering the adjustment cam.
8. Using a 1/2” socket, turn the adjustment cam:
   - Turn the cam only a couple of clicks at a time before rechecking the result.
   - Each click of the cam represents about 2mm of leadnut travel.
   - Turn the cam clockwise to raise the leadnut and increase the travel distance.
   - Turn the cam counterclockwise to lower the leadnut and decrease the travel distance.
   - **The target travel is: 2.22 ± 0.09” (56 ± 2 mm)**
9. After adjusting the cam, cycle the actuator and recheck the travel distance.

Setting Leadnut Position

After the leadscrew travel has been set, it is necessary to adjust the final position of the leadnut. You will notice that the leadnut position is less than the leadscrew travel. In the retracted position, the leadnut should be bottomed out and the spring slightly compressed.

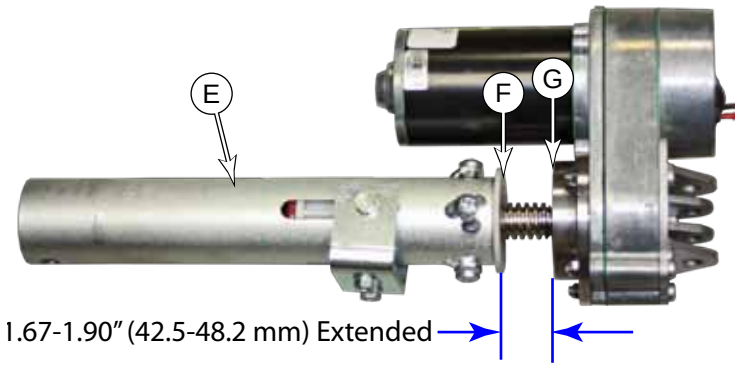

10. Extend the actuator until it stops.
11. Manually turn the leadnut until the leadnut distance is 1.67 to 1.90 inch (42.5 to 48.2 mm).
12. While holding the leadnut from turning, cycle the actuator to confirm its motion.
13. After the adjustment is complete, make sure the leadnut does not turn while you are reinstalling the actuator.

Troubleshooting Notes:

- If the actuator will neither raise nor lower, then both cams are activating their limit switches at the same time.
  - Rotate the cam clockwise several clicks.
  - **Do not hold the nut**, and raise and lower the actuator until it cycles normally again.
  - Go back and restart the adjustment with the extended limit adjustment.
- If you are using the “Output Test” method, and the main machine controller sees the actuator go active again after being stopped on a limit position, the controller will issue an error, and need to be reset. This may occur when you are turning the cam clockwise.

Removal and Installation

Scrub Deck Doors

The scrub deck doors are removable for easier access to any of the components under the machine. To prevent the doors from coming off while the machine is in use, the hinges can't be separated unless the doors are open at least half way.

To remove the door, open it about 45 degrees and lift it off the hinges **(A&B)**.

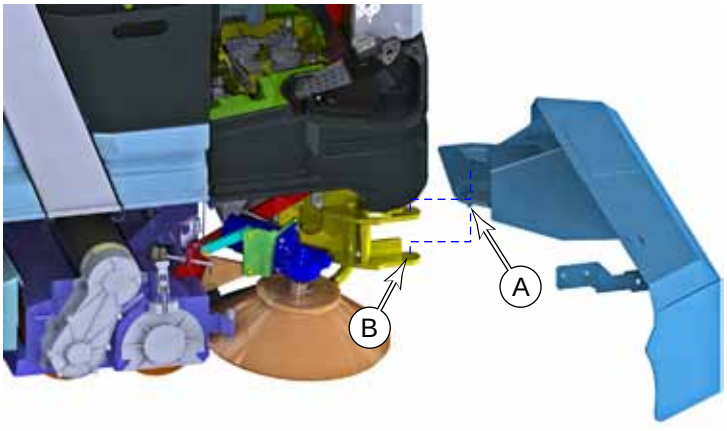

Side Squeegees

The side squeegees can be opened from the scrub deck for maintenance or easier access to the deck components, by pressing down on the release lever **(A)**. If you need to remove the side squeegee for maintenance, remove the top and bottom bolts **(B)** acting as a hinge pin.

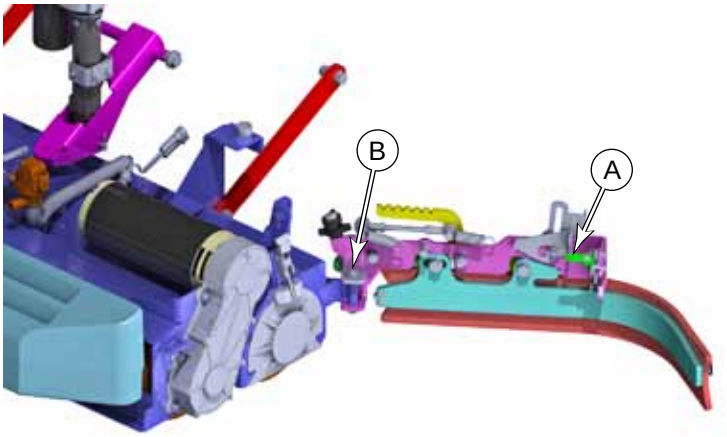

Scrub Deck

Removing the scrub deck is a prerequisite to completing other procedures, such as servicing the brush motors. The procedure is generally the same for all 3 scrub deck types.

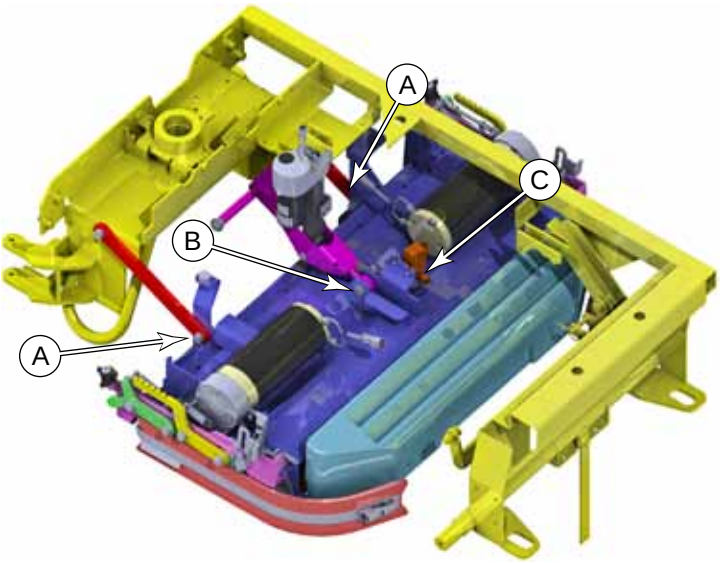

1. For easier access, you may choose to remove one or both Scrub Deck Doors described on page 108.
2. If available, position a furniture dolly, mechanic's creeper, or similar wheeled platform below the scrub deck to make it easier to roll the deck out from under the machine.
3. Lower the scrub deck to a neutral position. Refer to the Deck Lift Actuator described on page 110 for different options to complete this, including if the actuator cannot be powered.

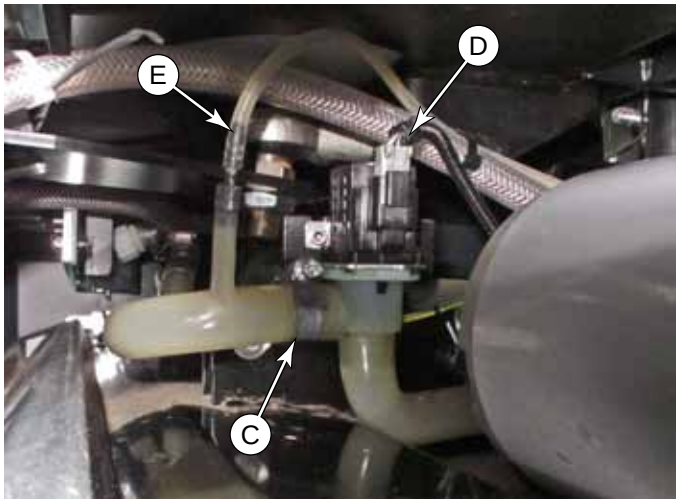

4. Loosen the hose clamp and remove the solution line from the solution solenoid **(C)**.
5. Disconnect the solution solenoid connector **(D)** from the solenoid.
6. Disconnect the two scrub brush motor power connectors
7. Remove the forward link arm retaining clips and pins **(A)** from the scrub deck. You may wish to tie up the link arms to prevent them from getting caught when you slide the deck out.
8. Remove the retaining clip and pin from the deck lift linkage **(B)**. After the pin is removed, you may wish to raise the lift actuator to keep it out of the way as you slide the deck in or out from the machine.
9. Slide the deck toward the rear of the machine so the deck lift linkage will clear the left brush motor, and then slide the deck out from the right side of the machine.

Note: *During replacement, note that there are two right brush motor connectors, depending on whether the machine uses a cylindrical or disk deck.*

Deck Lift Actuator

Getting Neutral Weight on the Deck

In order to remove the deck actuator pivot pins, you will need to take the weight off the deck.To do this, you either need to lower the deck to the floor, but stopping before the actuator applies normal scrub pressure; or support the deck in its raised position.

- The easiest way to do this is with the actuator test cable described on page 106. This permits the deck to be moved in small increments, as needed.
- If you don't have an actuator test cable, the next best method is to lower the deck normally, press the E-Stop button, disconnect the battery, and then slightly jack the front of the machine just enough to take the pressure off the deck.
- If the deck actuator cannot be powered, or cannot be operated for any reason, then the best solution is to support the deck as described below:
  a. Using a floor jack or similar method, raise the front of the machine slightly.
  b. Apply blocking, cribbing, or a wheeled dolly (if necessary) below the scrub deck.
  c. Slowly lower the front of the machine until the weight on the retaining pins **(E or F)** becomes neutral, and the pins are free to move.

Note: *For simplicity, the procedure is written for using the actuator test cable.*

CAUTION: Risk of arc flash. Make sure to disconnect the main battery connector when working below the floor panel.

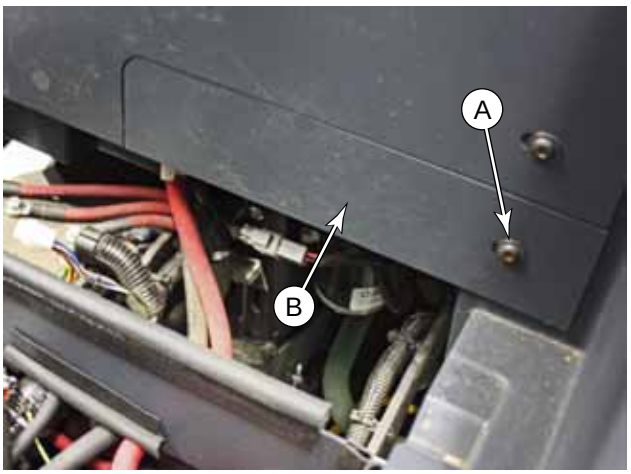

1. If you don't have an actuator test cable, take the weight off the deck as described above. Otherwise, do this at step 6 below
2. Disconnect the main battery cable below the operator's seat.
3. Remove the Floor Panel described on page 71.
4. Remove the screw **(A)** that secures the actuator access cover **(B)** to the side of the battery bay, and lift the cover out toward the right to remove it.

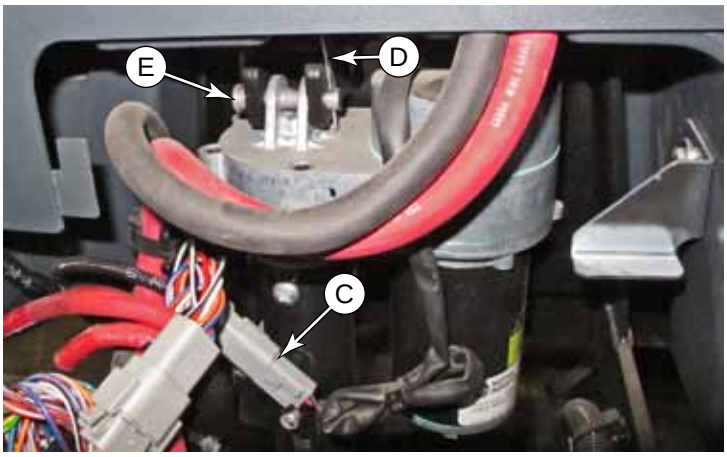

5. Disconnect the electrical connector **(C)** from the actuator.
6. Connect the actuator cable to the test cable as described on page 106, and lower the deck to a neutral weight position.
7. Remove the retaining clip **(D)** and pin **(E)** from the top of the actuator.

8. Remove the lower retaining clip and pin (F) from the actuator.

9. Taking care to not rotate the leadnut with respect to the actuator body, lift the actuator out from above. You may need to rotate the whole assembly clockwise slightly to clear the motor-side of the actuator from the battery bay panel.

10. As necessary, perform the Lift Actuator Limit Adjustment described on page 106.

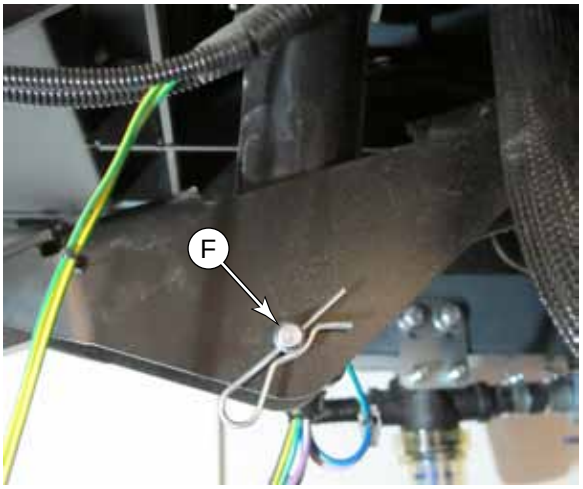

Brush Drive Belt

The brush drive belt is a stretchable belt, so there is no tension adjustment. The belt can be installed and removed under tension.

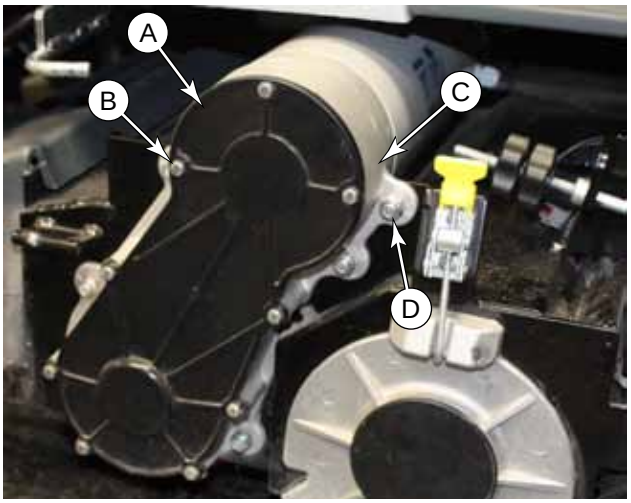

1. Open the side door and the side squeegee.
2. Remove the 9 screws **(B)** that secure the belt cover to the drive housing, and remove the cover **(A)** and gasket.
3. Walk the belt off the pulley. An effective method to easily remove the belt is to place a rag around the belt, and then pull the rag toward the pulley, and the belt will roll right off.

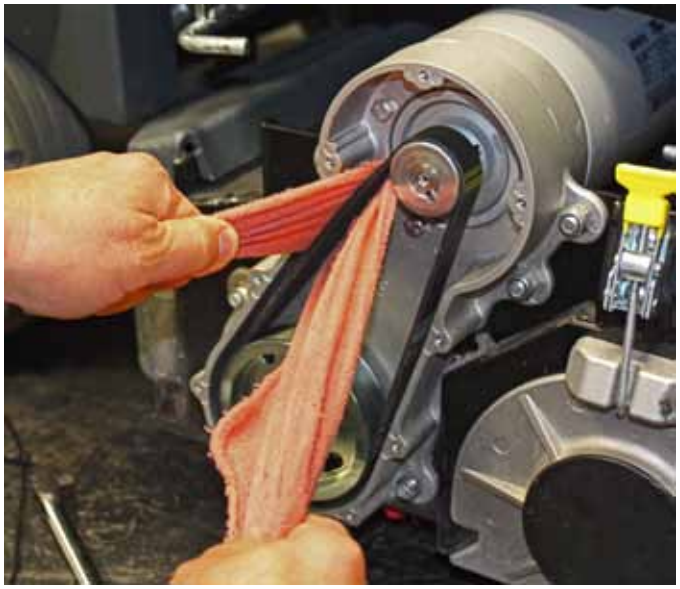

4. To replace the belt, position it around the smaller pulley, and then begin feeding it around the larger pulley. Using a 3/8" socket extension, rotate the pulley to finish walking the belt onto the pulley.
   - If you have difficulty keeping the belt on the pulley while you rotate the pulley, the smaller round hole in the pulley is designed to permit you to place a cable tie through the pulley and around the belt to hold it in place.

Brush Motor

1. Remove the brush from the drive hub.
2. Press the One Touch Scrub button to lower the scrub deck, and then press the E-stop to stop any running motors.
3. With the scrub deck still lowered, unplug the battery connector under the operator's seat.
4. Open the side door and the side squeegee.

Note: *If you are completing this procedure to replace the motor brushes, it is not necessary to remove the drive belt, and you can remove the entire motor and belt assembly as-one. Skip down to step 6.*

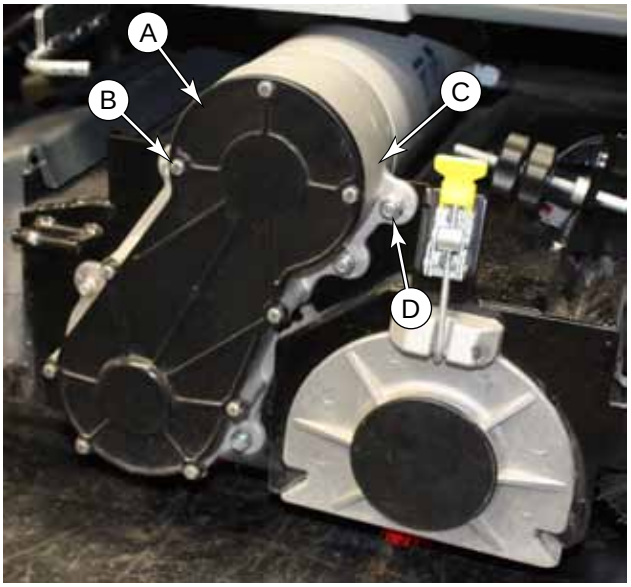

5. Remove the belt cover **(A)** and the Brush Drive Belt described on page 112.
6. Disconnect the motor electrical connector.
7. Remove the six nuts **(D)** that secure the belt housing **(C)**, and remove the motor and housing.
8. If you are replacing the motor brushes, stop here. Otherwise, remove the four bolts **(G)** that secure the motor to the drive housing, and remove the motor **(H)**.

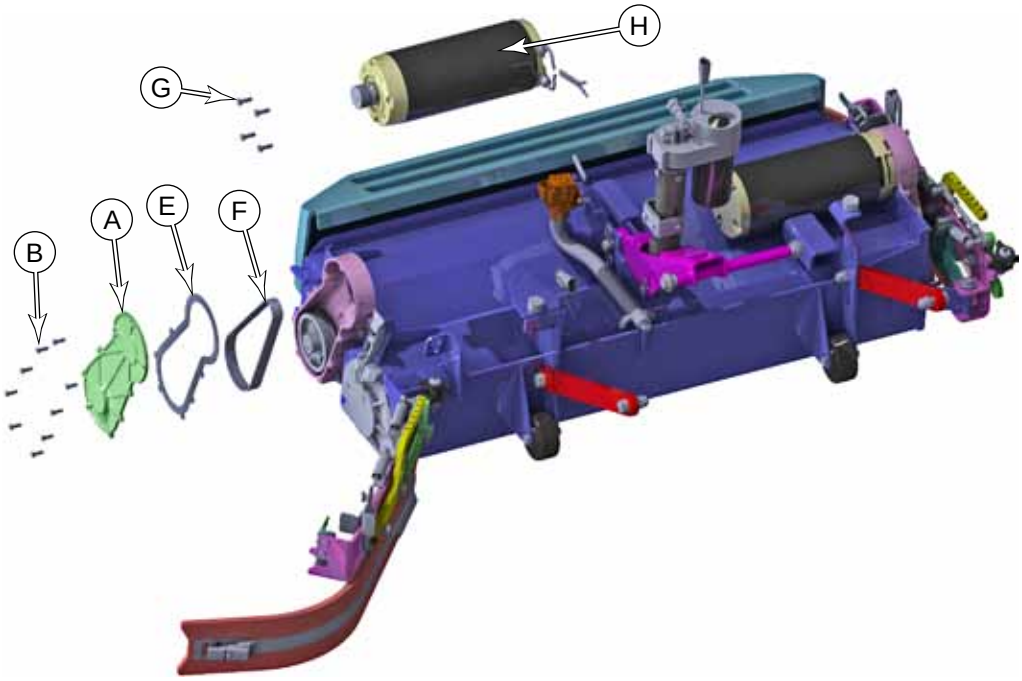

Brush Motor Brushes

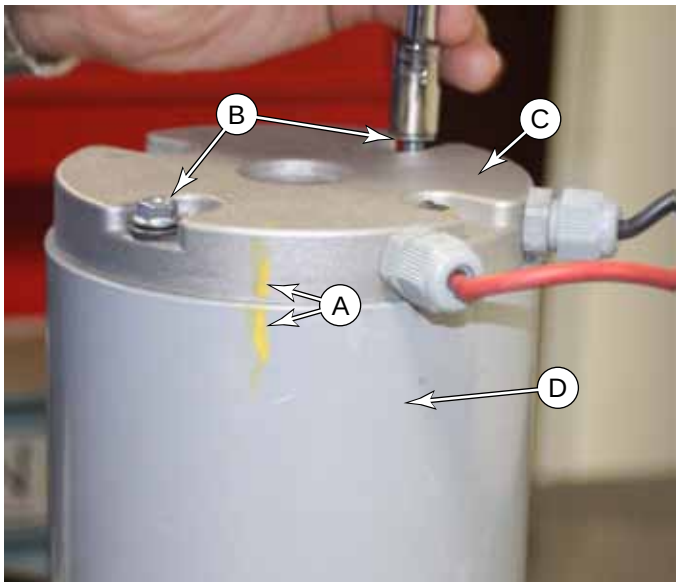

1. Remove the Brush Motor described on page 113. It is not necessary to remove the belt nor to separate the motor from the belt housing.
2. Stand the motor and belt housing up on a work bench.
3. Mark the orientation of the motor end cap **(C)** and motor housing **(D)** with a line **(A)** between them . It's also a good idea to mark the bottom end cap too, just in case the housing slips loose.
4. Remove the two nuts **(B)** that secure the top and bottom end caps to each other through the motor housing.
5. While taking care to not loosen the motor housing from the bottom end cap, remove the top end cap from the motor.
   - The motor's rear bearing is lightly pressed into the end cap. You may need to lightly tap on the end cap to get it started.
   - Carefully and evenly pry the end cap up, working all the way around, until it is free from the motor bearing.

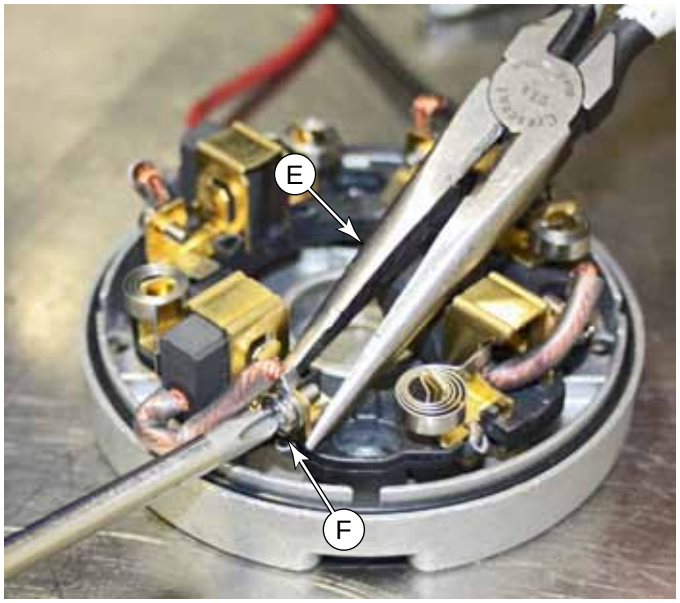

6. Hold the brass mounting bracket with a pliers **(E)** to keep it from twisting, and loosen the brush terminal screw **(F)**.
7. Slide the brush away from the center to remove it from the brush holder.
8. Remove the other three brushes.

9. Gently retract the brush spring **(G)**, and insert the new brush into the brush holder **(H)**. Note that the brush wire is closest to the end cap body.

10. Release the brush spring and allow it to push the brush all the way in toward the bearing pocket **(J)** to verify that the spring is properly positioned. (The brushes will later be retracted as shown in the image below.)

11. Reinstall the terminal screw **(F)**, and then repeat for the other 3 brushes.

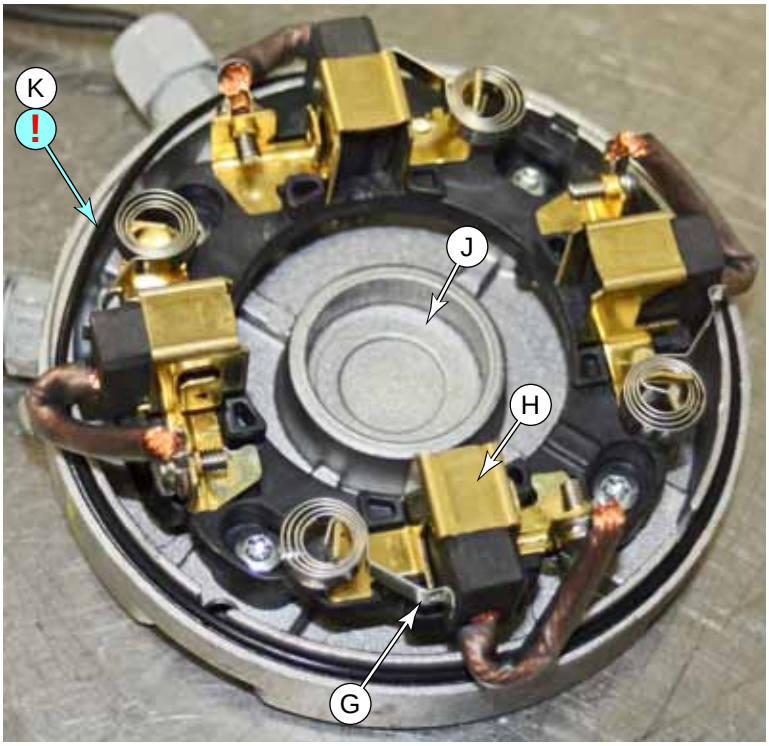

12. Inspect the end cap O-ring **(K)** to ensure it is properly positioned in the O-ring grove. Note how the O-ring is out of position in the image to the right.

13. Inspect the motor commutator bars for damage or missing bars. If any bars are damaged or missing, replace the motor.
    - If the commutator bars are carboned up, you can lightly polish them with fine emery cloth.

14. Retract each of the 4 brushes away from the center, and until the brush spring **(G)** presses against the side of the brush, as shown.
    - This will hold the brushes retracted for reassembly, but will easily snap forward when complete.
    - If any of the brushes slip forward before you insert the cap over the motor's commutator, stop and re-retract the brushes. If you don't, you will damage the brushes.

15. Taking care to not allow any brushes to slip or the O-ring to move out of its slot, position the end cap back over the end of the motor. Make sure to line up the original orientation marks **(A)**.

16. Lower the end cap down until the brush wires **(L)** are barely sticking out.

17. Gently push in on the brush wires, making sure you hear the brush snap forward and contact the commutator. Double check to make sure all 4 brushes are extended.

18. As necessary, gently tap on the top of the end cap until the motor bearing is seated in the bearing pocket **(J)**.

19. Reinstall the nuts **(B)**.

20. Reinstall the motor in the scrub deck.

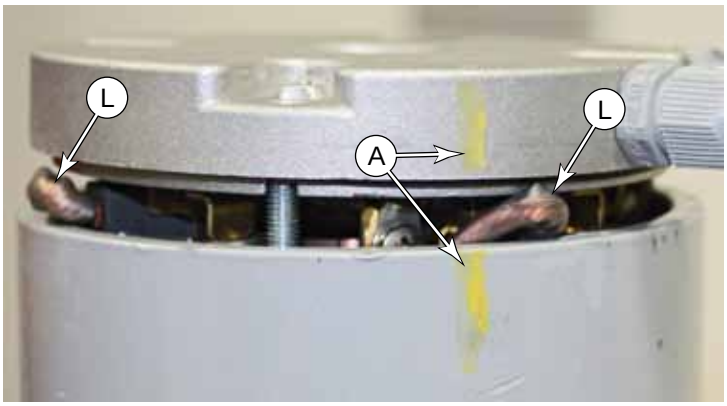

Specifications

Parameter	Range
Brush Contactor Coil Resistance	189 Ω
Brush Motor Amperage	4 amps per motor at 100%
Lift Actuator Amperage	Up: 4.1A initial, then 2.6A Down: 0.9-1.2A

Special Tools

Actuator Test Kit

The actuator test kit (Pn 56407502) is used to manually control an actuator removed from the machine, but powered from a 36-volt battery. It contains alligator clips to connect to the battery, a reversing power switch, and a cable connector. If your test kit is prior to Rev E, you will also need an adapter cable (Pn 56384816) to connect between the tester and the actuator. This adapter cable is included in Rev E and above.

38 - Squeegee System

Functional Description

The squeegee tool collects wastewater from the floor for the recovery system to lift the water into the recovery tank. The floor squeegee is wider than the path of the scrub deck to ensure collection of all wastewater from the perimeter of the scrubbing area. The squeegee also pivots to the side to permit operation near walls and to keep the squeegee within the scrubbing path while turning the machine.

Squeegee Lift Actuator

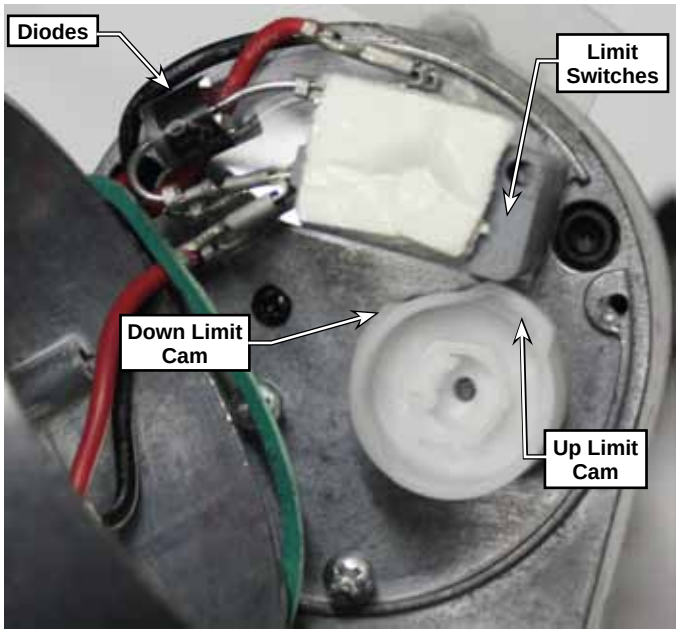

The squeegee lift actuator operates on an offset arm that raises the squeegee assembly. When the actuator retracts, the arm pivots out of the way and allows the squeegee to lower. When the actuator is extended, the arm pivots the other way and raises the squeegee.

To extend or retract the actuator, the power module reverses polarity to the actuator. The actuator determines how long it should run to reach full extension or retraction. It accomplishes this with a pair of cams, limit switches, and diodes.

As each cam rotates, it opens the normally closed circuit and stops the motor's rotation. However each cam is functional only for its intended direction of rotation. This is accomplished with the diodes, which effectively short circuit the switch for one direction (polarity), but not the other.

In the diagram below, the clockwise cam/limit switch is effectively short circuited by its diode when the electrical polarity is driving the motor in the counterclockwise direction (and vice versa for the CCW). But the counterclockwise cam is not short circuited, so it will open the motor circuit when the cam lobe reaches the limit switch.

The down-limit cam isn't adjustable, but by adjusting the position of the up-limit cam, the actuator can control its length of travel for the leadnut along the leadscrew.

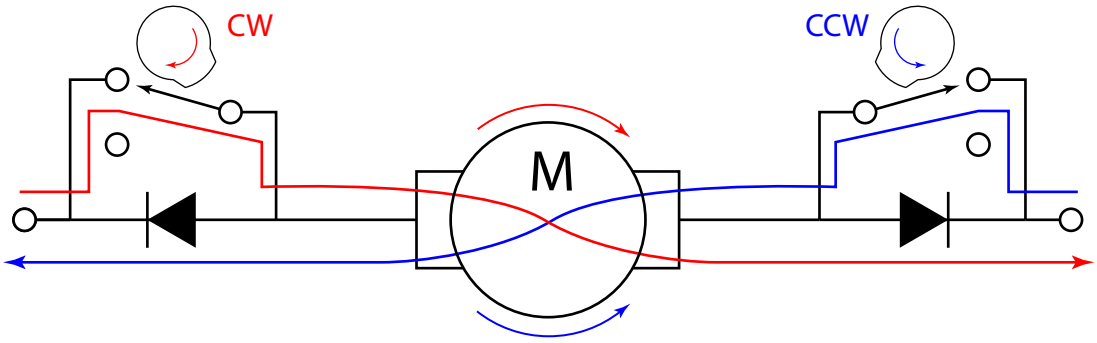

Squeegee

The squeegee has a front and rear squeegee blade, creating a vacuum area in between where water can be drawn up from the fast moving airflow. The front squeegee blade is intended to permit wastewater to enter the middle of the squeegee's vacuum area, yet still maintain enough of a seal to not completely lose vacuum. The rear squeegee blade is intended to create a tighter seal to the floor, and also act as a wiper to prevent wastewater from being left behind the machine.

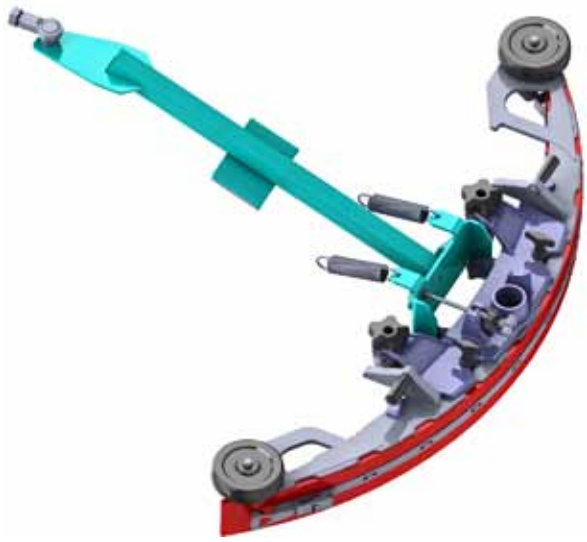

Maintenance and Adjustment

Squeegee Blade Cleaning and Inspection

Periodically clean and inspect the squeegee assembly and blades **(D)**.

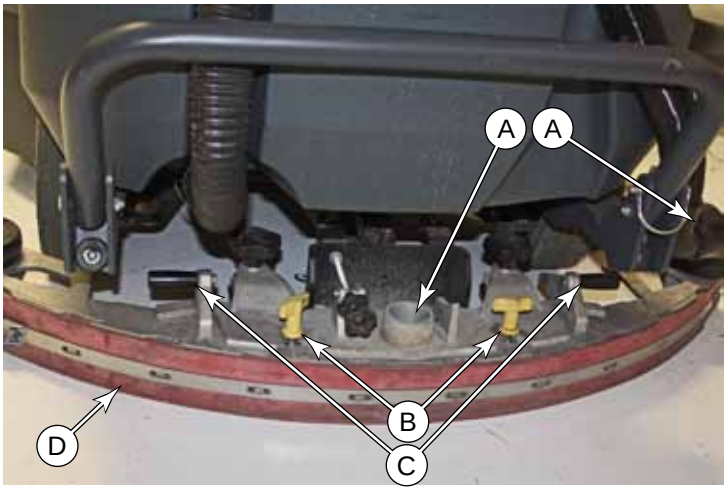

1. Remove the squeegee hose **(A)** and move it off to the side.
2. Loosen the two thumb nuts **(B)**.
3. Using the two carrying handles **(C)**, slide the squeegee assembly off the lift mechanism.
4. Clean the squeegee blades **(D)** and suction area between the blades with soap and water.
5. Inspect the squeegee blades for nicks, tears, and worn leading edges. If a squeegee blade is worn or damaged, it may be turned around with a fresh edge facing down/forward up to four times before complete blade replacement is required.

Squeegee Height and Tilt Adjustment

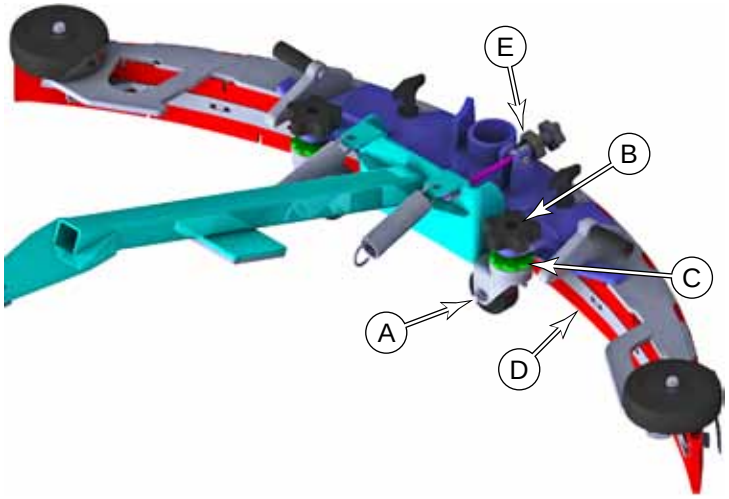

The squeegee height and tilt should be adjusted when the squeegee blades are replaced, or if the squeegee is not fully wiping the floor. Misadjustment symptoms include pooling in front of the squeegee or water streaks at the center or edges of the squeegee path.

1. Park the machine on a flat, even surface and lower the squeegee.
2. Without moving the machine (which will cause the rear squeegee blade to bend backward), inspect the interface between the edge of the rear squeegee blade and the floor. Inspect for gaps at either the center or the edges.

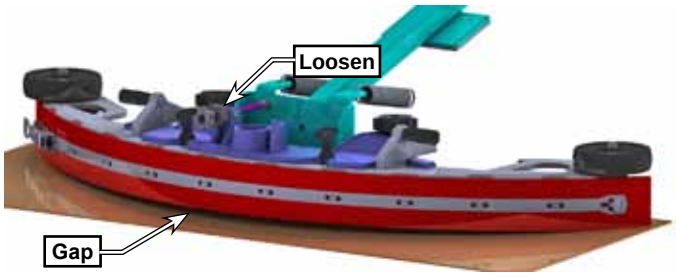

3. Tighten (clockwise) or loosen (counterclockwise) the squeegee tilt adjustment knob **(E)** to level the squeegee across its length.
   - If there is a gap in the center, loosen the adjustment knob.
   - If there are gaps at the outside, tighten the adjustment knob.

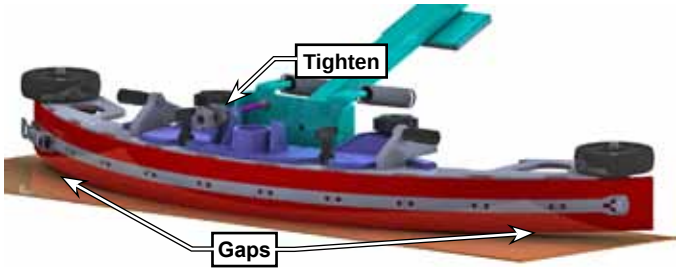

4. Move the machine forward slightly to cause the rear squeegee blade to bend back from friction with the floor.
   - Make sure the flare of the rear blade is even along the entire length of the blade.
5. Inspect the height of the front squeegee blade. When the casters **(A)** are touching the ground, the front squeegee blade **(D)** should barely be touching the floor. To adjust the height:
   a. Loosen the two clamping knobs **(B)**.
   b. Loosen the adjustment disk **(C)** to raise the squeegee, or tighten the adjustment disk to lower the squeegee.
   c. Make sure the height is the same across the width of the squeegee.
   d. Retighten the clamping knobs.
6. If the height was significantly changed, recheck the tilt adjustment in step 3.

Actuator Limit Adjustment

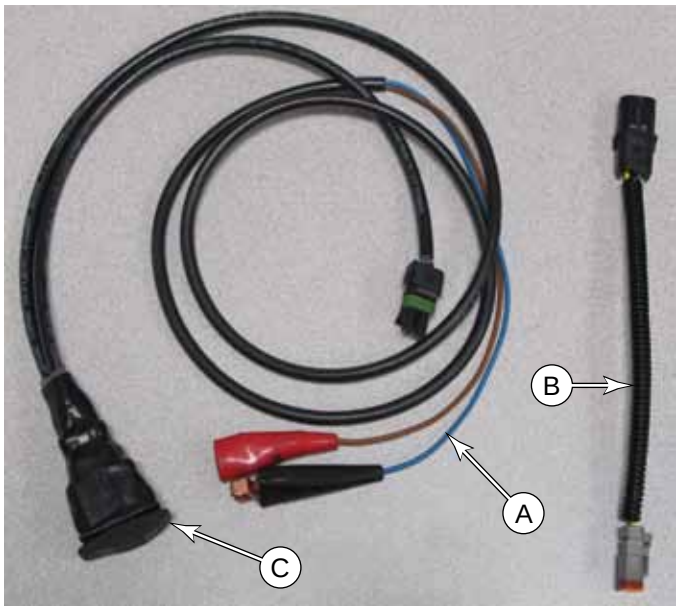

The power module commands the actuator to raise or lower, but the actuator itself determines when it should stop moving. This is accomplished by two cam lobes and two micro switches (limit switches). The lower cam is not adjustable, so the lower limit is adjusted by rotating the leadscrew nut. Then the upper limit is adjusted by turning the cam lobe until the actuator stops at the correct height.

To make the adjustment, you will need to manually power/control the actuator. If you don't have the Actuator Test Kit described on page 125, you can use the Squeegee Lift Output Test described on page 33. Just note that if you use the Output Test, you may periodically cause a controller fault, and have to reset the machine. For simplicity, this procedure is written for the test kit method.

This procedure is typically performed as part of replacing the actuator. If the actuator is not already removed from the machine, then remove it following the procedure on page 124.

1. Connect the tester **(A)** to the positive and negative terminals of the battery.
2. Using the adapter cable **(B)**, connect the tester to the actuator.
3. While preventing the actuator leadnut **(E)** from turning, use the switch **(C)**, extend the actuator until it stops.
4. Measure the distance between the actuator gearbox at **(G)** and the top of the leadnut at **(F)**.
5. Manually turn the leadnut until this distance is 68mm (2.7").

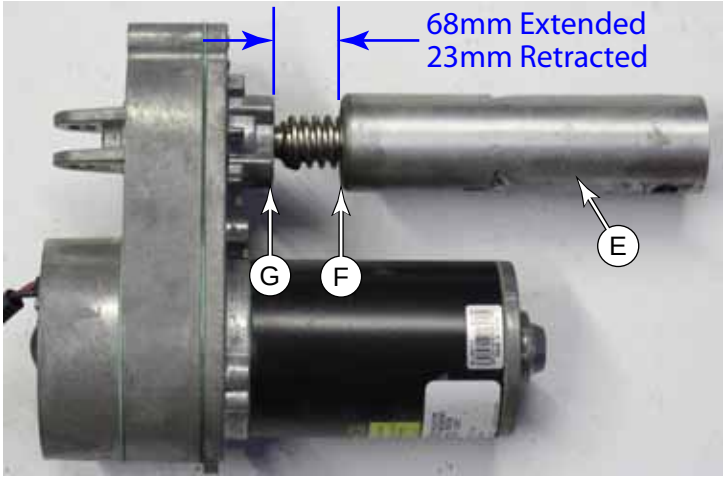

CAUTION: If while retracting the actuator with the "Output Test", it appears the leadnut is going to crash into the actuator housing, let go of the leadnut and let it spin.

6. While holding the leadnut from turning, retract the actuator until it stops.
7. Measure the retracted distance between **(G&F)**. The target is 23mm (.93").

8. Remove the dust cap from the top of the actuator covering the adjustment cam.
9. Using a 1/2" socket, turn the adjustment cam:
   - Turn the cam only a couple of clicks at a time before rechecking the result.
   - Each click of the cam represents about 2mm of leadnut travel.
   - Turn the cam clockwise to raise the leadnut and decrease the measured distance.
   - Turn the cam counterclockwise to lower the cam and increase the measured distance.
10. Before disconnecting the tester from the actuator, retract the actuator while holding the leadnut from turning. It is easiest to install the actuator when it is retracted.
11. After the adjustment is complete, make sure the leadnut does not turn while you are reinstalling the actuator.

Troubleshooting Notes:

- If the actuator will neither raise nor lower, then both cams are activating their limit switches at the same time.
  - Rotate the cam clockwise several clicks.
  - **Do not hold the nut**, and raise and lower the actuator until it cycles normally again.
  - Go back and restart the adjustment with the extended limit adjustment.
- If you are using the “Output Test” method, and the main machine controller sees the actuator go active again after being stopped on a limit position, the controller will issue an error, and need to be reset. This may occur when you are turning the cam clockwise.

Removal and Installation

Rear (main) Squeegee Blade Reversal or Replacement

1. Remove the suction hose from the squeegee body and move the hose off to the side **(A)**.
2. Loosen the two thumbscrews **(B)** that secure the squeegee assembly to the machine, and remove the squeegee assembly.

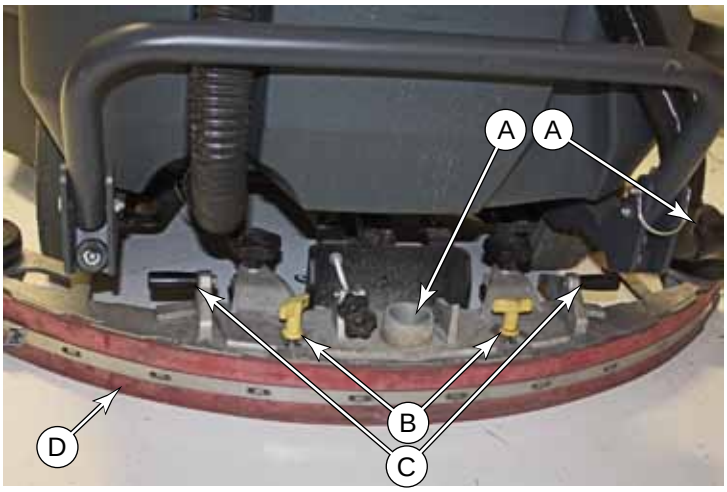

3. Press forward on the latch release **(B)** and lift up on the latch handle **(A)**, and remove the retaining strap **(D)**.
4. Lift the rear squeegee blade **(C)** off the squeegee body.

- The squeegee can be rotated and/or flipped 3 times to expose a new edge (4 edges total) to the lower-front. If all 4 edges are worn, replace the squeegee blade with a new one.

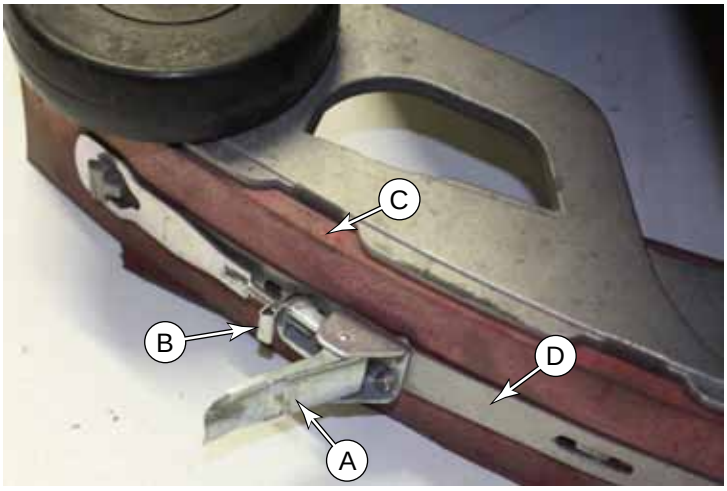

5. To replace the blade, align the slots in the blade with the tabs on the squeegee body.
6. Replace the retaining strap and close the latch.
7. Place the squeegee on a flat surface and examine the blade for gaps. Readjust the blade as necessary.

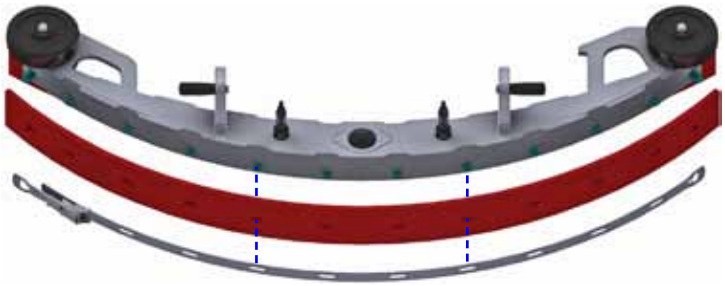

8. Reinstall the squeegee assembly and perform the Squeegee Height and Tilt Adjustment described on page 119.

Front Squeegee Blade Reversal or Replacement

1. Remove the suction hose from the squeegee body and move the hose off to the side **(A)**.
2. Loosen the two thumbscrews **(B)** that secure the squeegee assembly to the machine, and remove the squeegee assembly.

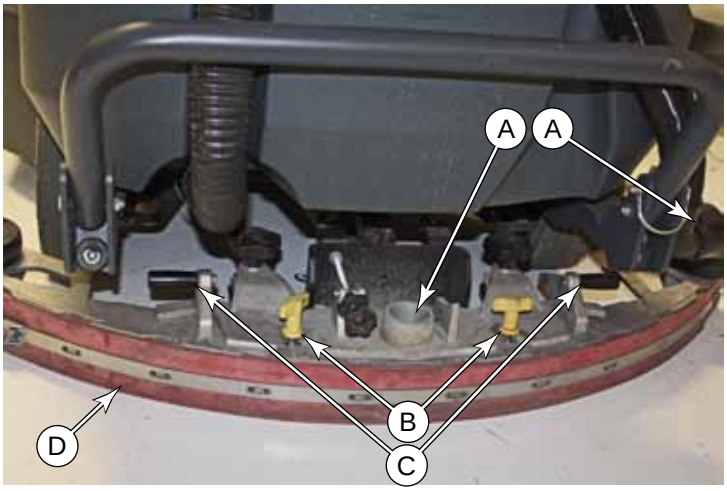

3. Loosen the clamping thumbscrew **(E)** that compresses the retaining strap **(F)** against the squeegee blade **(G)** and squeegee body.
4. Lift the center of the retaining strap **(F)** away from the tabs on the squeegee body, and slide it out from below.
5. Lift the front squeegee blade **(G)** off the squeegee body.

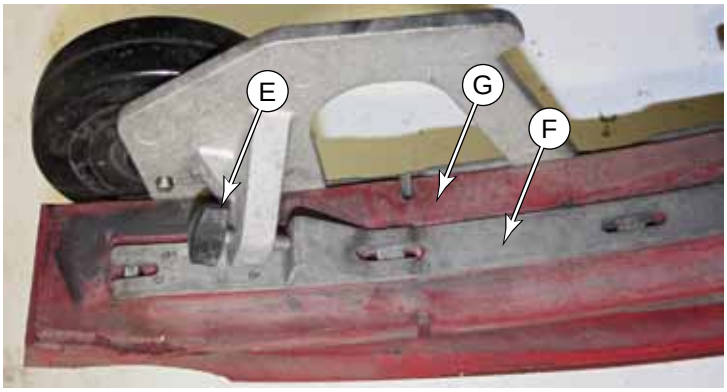

- The squeegee can be rotated and/or flipped 3 times to expose a new edge (4 edges total) to the lower-front. If all 4 edges are worn, replace the squeegee blade with a new one.

6. To replace the blade, align the slots in the blade with the tabs on the squeegee body.
7. Reinstall the retaining strap **(F)** in the reverse process from removing it.
8. Tighten the thumbscrews **(E)** to press the retainer against the squeegee blade.
9. Reinstall the squeegee assembly and perform the Squeegee Height and Tilt Adjustment described on page 119.

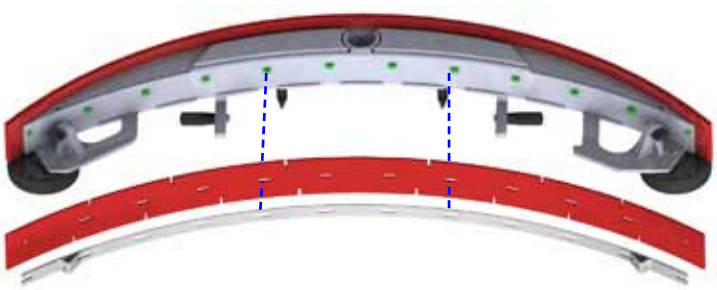

Squeegee Lift Actuator

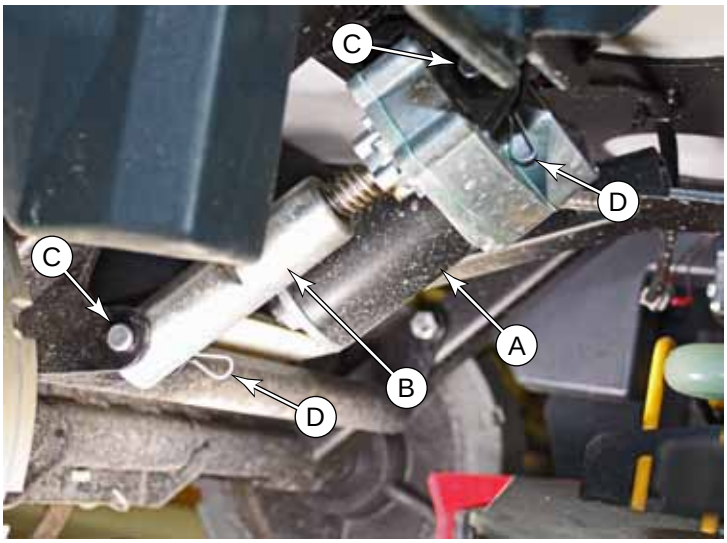

1. Before turning off the machine,press the vacuum switch to lower the squeegee to the floor, then press the E-stop button to shut down all motors.
2. With the E-stop active and without turning the machine off, disconnect the battery connector under the operator's seat. This will cause the squeegee to remain lowered.
3. Disconnect the actuator electrical connector.
4. Remove the two retaining clips **(D)** from the pivot pins **(C)**, and remove the pivot pins.

Note: *If the actuator is being removed for a reason other than replacement, do not allow the leadnut* **(B)** *to rotate with respect to the leadscrew. As long as the leadnut does not rotate, you can reinstall the actuator without performing the limit adjustment.*

5. For a new actuator or if the nut was repositioned with respect to the gear housing, perform the Actuator Limit Adjustment described on page 120.
6. Reinstall the actuator on the machine by reversing the procedure steps.

Specifications

Parameter	Range
M6 Squeegee Actuator Motor	Up: 4.1A initial, then 2.6A Down: 0.9-1.2A

Special Tools

Actuator Test Kit

The actuator test kit (Pn 56407502) is used to manually control an actuator removed from the machine, but powered from a 36-volt battery. It contains alligator clips to connect to the battery, a reversing power switch, and a cable connector. If your test kit is prior to Rev E, you will also need an adapter cable (Pn 56384816) to connect between the tester and the SC6000 actuator. This adapter cable is included in Rev E and above.

40 - Recovery System

Functional Description

The recovery system extracts wastewater from the floor collected by the squeegee, and deposits it into the on-board recovery tank.

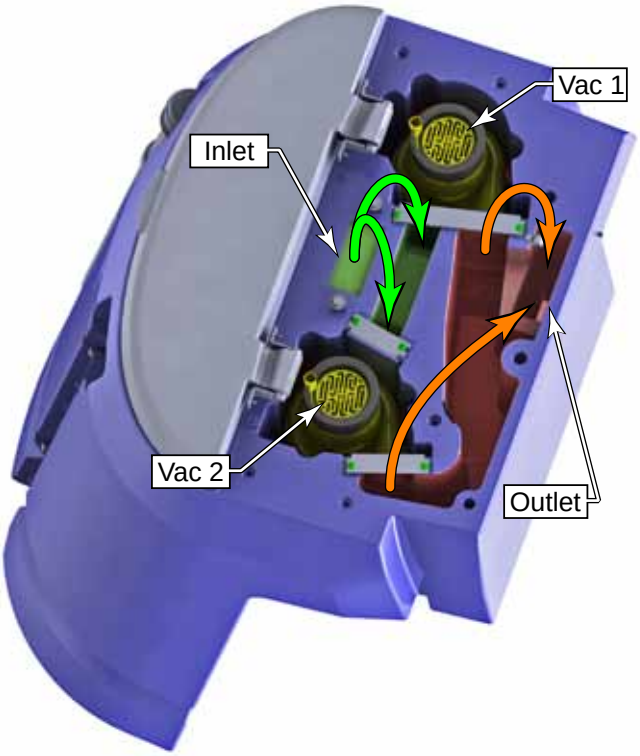

Vacuum Motor and Recovery Tank

The SC6000 machine has one standard vacuum motor, plus an optional second vacuum motor for higher vacuum draw. The vacuum motor generates airflow through the recovery tank and suction hose to the squeegee. The high velocity air at the squeegee pulls the wastewater off the floor and up through the suction hose. As the mixture of air and water enters the recovery tank, the airflow slows down due to the larger space, and the water drops out of the airflow and into the tank.

The airflow passes through an inlet screen to prevent debris from entering the impeller of the vacuum motor. The exhaust air is expelled through ducting in the machine toward the floor so it can be dispersed without blowing directly on the operator or the work environment.

Operational Mode Prerequisites

Before the main controller can activate any of the operational modes, it must first check that the appropriate prerequisites are met.

- **Recovery System Outputs**
  - Vac motors M4 and M5 – Recovery mode (Seat switch closed upon entry) or Squeegee Actuator M6
    - No recovery system fault (vac motors and squeegee)
    - Throttle command not equal to zero (and not timed out)
    - No Estop inhibit
    - No impact lockout inhibit
    - No low voltage cut out inhibit (second stage)
    - No RTF inhibit
    - Note M5 also requires Vacuum option set to dual in configuration menu
  - Vac motors M4 and M5 – Wand mode (seat switch open upon entry) or Squeegee Actuator M6
    - No recovery system fault (vac motors and squeegee)
    - No Estop inhibit
    - No impact lockout inhibit
    - No low voltage cut out inhibit (second stage)
    - No RTF inhibit
    - Note M5 also requires Vacuum option set to dual in the configuration menu

Vacuum Motor Control Circuit Overview

Power to the vacuum motor is controlled by the power module, which is commanded by the main controller. When the machine is enabled for operation, the power module activates the K2 power relay, that provides positive battery power to the vacuum motor, and other devices. To activate the vacuum motor, the power module uses PWM control to complete the battery circuit through the motor to ground.

The power module monitors the performance and health of the vacuum motor, and reports this information back to the main controller via the CAN Bus. The power module will detect open circuits, short circuits, and motor overloads.

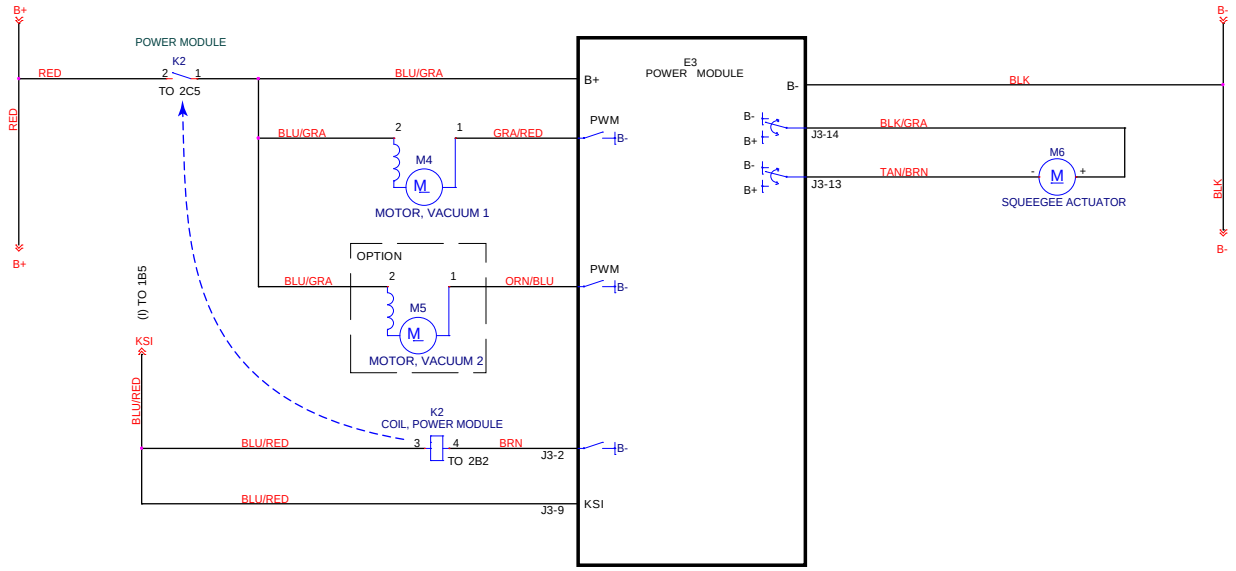

Troubleshooting

Whenever there is a vacuum problem, it's best to check over the entire system. Use the checklist below as a guide to thoroughly check the vacuum system.

- Inspect the vacuum motor inlet screen and clean any built-up debris from the screen.
- Clean built-up dirt from the inside of the squeegee assembly.
- Replace the squeegee blades if they are nicked or torn.
- Inspect the hose between the squeegee and the recovery tank and rinse any built-up dirt from the hose. Replace the hose if it is kinked or damaged.
- Inspect and make sure the gasket on the recovery tank cover is sealing and not damaged.
- Make sure that the recovery tank drain hose cap seals airtight.

Problem	Cause	Correction
No suction	Vacuum motor not running	• Check the vacuum motor power connector
Poor suction	Unknown: Leak versus Clog	To determine whether the problem is a leak versus a clog, remove the suction hose from the squeegee and completely block the hose with your hand and observe the suction. Then tilt your hand to allow free airflow, and observe the speed of the airflow past your hand. Alternatively, you may complete the Vacuum Suction Test described on page 129. • Strong suction when blocked and weak airflow when unblocked indicates a clog. • Weak suction when blocked, but strong airflow when unblocked indicates a leak. • Weak suction and weak airflow indicate either a massive leak, or a failing vacuum motor.
	Clogged vacuum	• Inspect and clean the vacuum motor inlet filter • Inspect the suction hose between the squeegee and the recovery tank • Inspect and clean the squeegee
	Vacuum leaks	• Inspect the gasket on the recovery tank cover • Inspect the suction hose between the squeegee tool and recovery tank for loose connection, holes, or damage • Inspect the squeegee blades for nicks, cuts, and damage • Inspect the recovery tank drain hose and cap for leaks • Inspect the vacuum motor mount for leaks

Vacuum Suction Test

Use this procedure to verify that the vacuum system is performing within factory specifications. This procedure can also be used to isolate the cause of a vacuum problem between a clog or leak. It is a two-part procedure that verifies both static pressure and flow rate. This procedure requires a vacuum gauge (PN 56205281), a piece of 2" PVC (or similar) tube, a 1" hole saw, and some duct tape (or similar, for a seal).

1. Remove the suction hose **(A)** from the squeegee and then turn on the vacuum.
2. Place the vacuum gauge **(B)** on the hose so the taper **(C)** seals against the end of the hose.
3. Record the vacuum pressure reading from the gauge. This is the static pressure.
4. Turn the vacuum off while constructing and fitting the PVC restricter tube **(D)**.

5. Cut a piece of 2" PVC approximately 6" long, and clean off the burs. The outer diameter of the tube should be close to, but not larger than 2½".
6. Drill a 1" hole **(E)** approximately in the middle of the PVC tube, and clean off the burs.
7. As necessary, wrap duct tape around the tube so it fits snugly in the end of the end of the suction hose with no leaks.
8. Turn the vacuum on and place the vacuum gauge on the restricter tube.
9. Record the vacuum pressure reading from the gauge. This is the restricted flow pressure.

Results Summary

The first part of this procedure determined the static pressure of the vacuum system, and the second part determined the flow rate (by calculation). The flow rate through a restriction is determined by the pressure differential across the restriction. These two parameters may be used to determine if the vacuum system is functioning properly, and may also be used to isolate a possible cause for a problem.

- If the static pressure is at least 57 inches H_2O, then the vacuum motor(s) are functioning properly and there are no significant leaks in the system.
- If the 1” restricted flow pressure is at least 20 inches H_2O, then there are no significant clogs in the system.
- If both parameters are below specifications, then one or both vacuum motors may be failing, or there may be a significant leak in the system.

Removal and Installation

Vacuum Motor

1. Using a 5mm hex key, remove the 2 screws **(A)** from the top of the crossbar **(B)**.
2. Slide the crossbar up to remove it from the machine. If the machine is equipped with the optional beacon or telematics module, make sure to disconnect the electrical connectors.

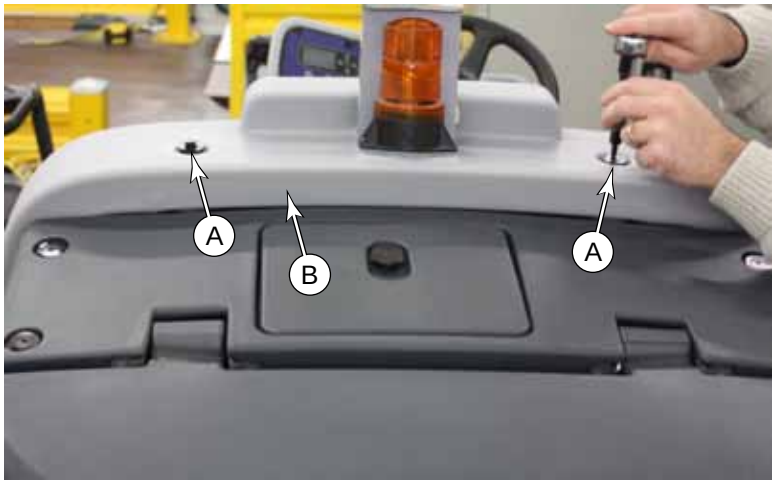

3. Remove the cable clamp **(G)** that secures the wire harness to the vacuum motor cover.
4. Open the vacuum filter access panel, lift out the foam filter **(E)** and wire mesh screen **(F)**, and then remove the two screws and washers **(D)** using a 1/2” socket.
5. Using a 5mm hex key, remove the seven screws and washers **(C)** that secure the vacuum motor cover to the recovery tank, and remove the cover (including the hinged recovery tank lid).

6. Disconnect the vacuum electrical connector **(H)**.

7. Lift the vacuum assembly **(J)** out of the recovery tank. Take care to not lose the three isolation mounts **(K)** nor the outlet foam seal **(L)**.

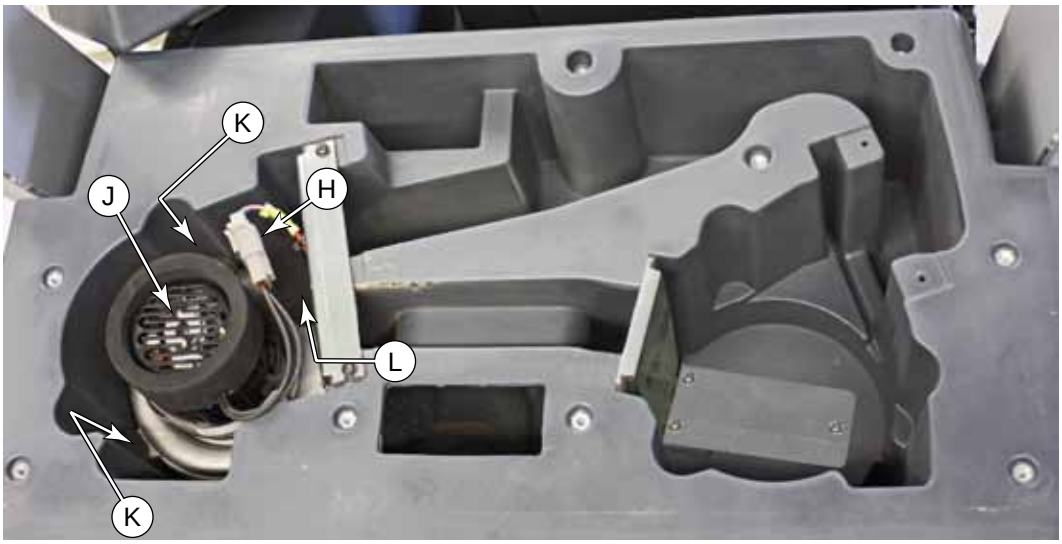

8. Inspect the main vacuum gasket **(M)** for damage and compressibility, and replace if necessary. Leaks in this gasket will reduce recovery system suction.

9. Inspect the motor ventilation gasket **(N)** for damage and compressibility. This gasket holds the vacuum motor assembly in position against the recovery tank.

10. Make service repairs to the vacuum motor as needed, and re-install by reversing the procedure steps.

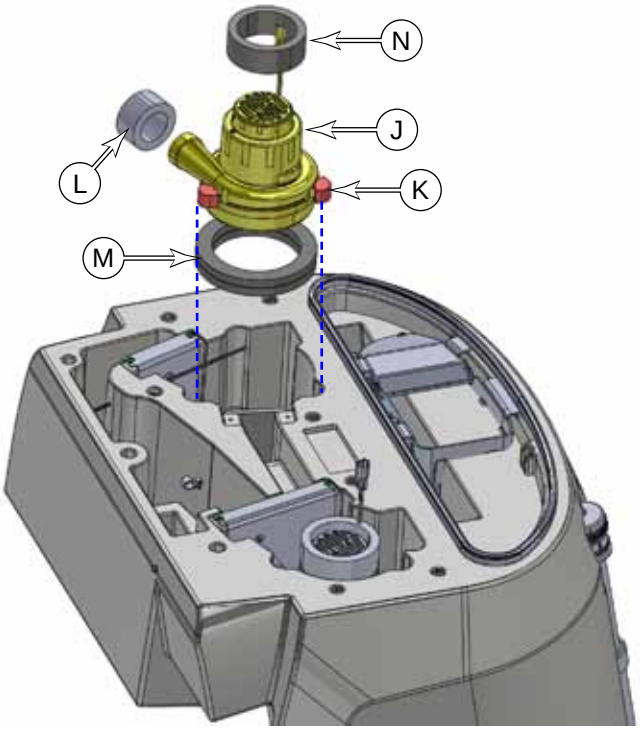

Vacuum Motor Brushes

1. Remove the Vacuum Motor described on page 130.
2. Remove the two screws **(A)** that secure the motor cover to the motor, and remove the cover.

3. Remove the two screws **(C)** that secure the contact strap **(D)**, and remove the strap. Take care to not bend the wire any more than necessary.
4. Lift the outer end of the brush **(E)** up, and slide the brush out of the motor housing.
5. Repeat for the second brush.

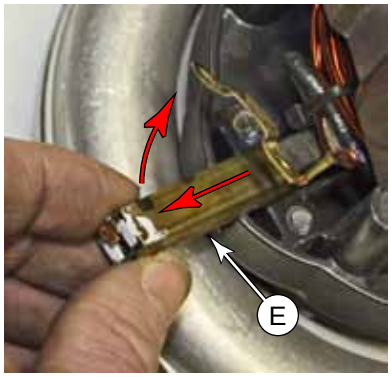

6. When installing a new brush, tilt the brush assembly downward at the front so the carbon bar contacts the commutator bars, and then compress the spring to fully insert the brush.

Specifications

Parameter	Range
Motor Amperage	18.1A at 100%

Special Tools

Vacuum Pressure Gauge
part number 56205281

1-inch open hole adapter
Fabricated from PVC

90 - Options and Accessories

The SC6000 machine may be equipped with optional accessories depending on the needs of the owner. Some of these accessories don't directly impact servicing the machine, but some may. So it is good to know what accessories you may encounter and how they impact the machine.

Dual Vacuum

Requires Main Controller configuration: Yes

Adds a second vacuum motor (Vac 2) to the recovery tank, as well as some changes to the baffles in the top of the recovery tank. A new wiring harness is added from the bottom of the recovery tank up to the new motor location. This motor will be available to the machine, including service mode, only after the main controller has been configured for dual vac.

Aside from the controller configuration, the service procedures for the main motor are the same for the second motor.

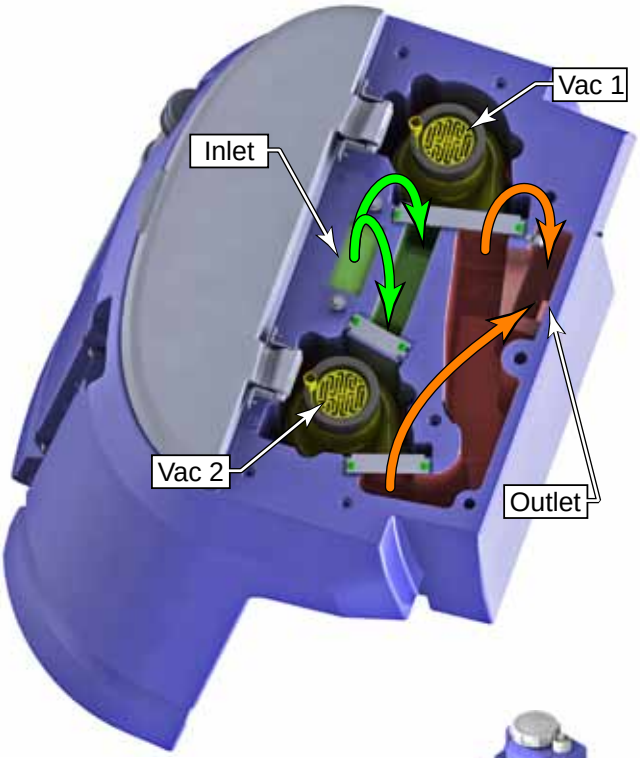

EcoFlex

Requires Main Controller configuration: Yes

Adds a pair of chemical pumps and a detergent bottle under the operator's seat. The outlet from the pumps passes down through the battery bay to the moulded solution tube at the scrub deck.

The EcoFlex system is covered in the "30 - Solution System" on page 84.

Side Sweep

Requires Main Controller configuration: Yes

Available only for cylindrical models. Adds a side broom to the right-front of the deck area. The option also includes a proximity sensor to detect when the operator has manually raised the side broom out of operating position.

The side broom is covered in the "34 - Scrub System, Cylindrical" on page 103.

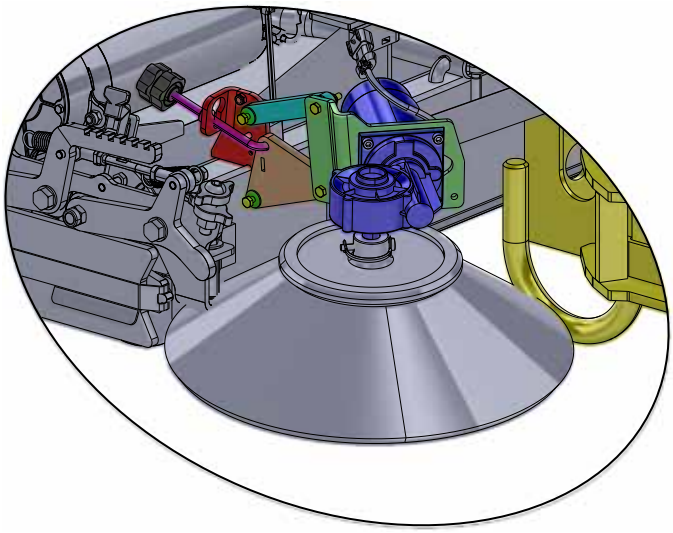

Dust Guard

Requires Main Controller configuration: Yes

Available only when also equipped with the Side Sweep option. This adds a misting nozzle in front of the side broom, a solenoid valve on the frame above the side broom, and a fluid pump at the rear of the machine. The inlet to the fluid pump connects to the moulded solution tube on the scrub deck. Only one option pump can be installed at a time, so this option is not compatible with the wash hose option.

Dust Guard is covered in the "34 - Scrub System, Cylindrical" on page 103.

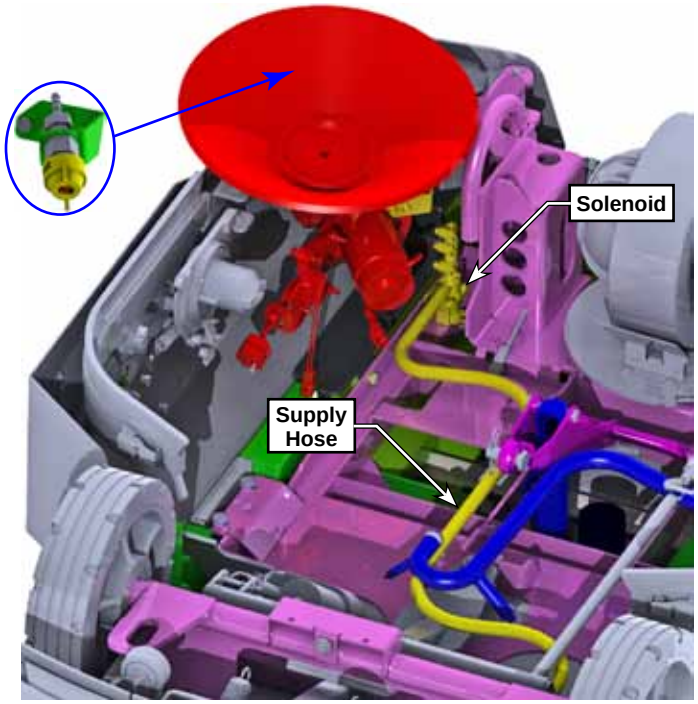

Beacon

Requires Main Controller configuration: No

The beacon is located on the crossbar behind the operator's seat. The beacon is active whenever the machine is powered on. The beacon itself is not covered in the manual, but accessing the wiring connector is shown in the removal procedure for the "Vacuum Motor" on page 130

Weight Kit

Requires Main Controller configuration: No

The weight kit mounts inside the lower steering column and provides additional weight over the drive wheel for improved ramp climbing capability. The weight kit is not covered in the service manual.

Foot Guard

Requires Main Controller configuration: No

The foot guard mounts under the foot pedal, and wraps around the pedal to protect the operator's foot from overhangin obstructions. The foot guard is not covered in the service manual.

Mop Holder

Requires Main Controller configuration: No

The mop holder is a bracket that mounts to the crossbar or overhead guard. The mop holder is not covered in the service manual.

Wash Hose

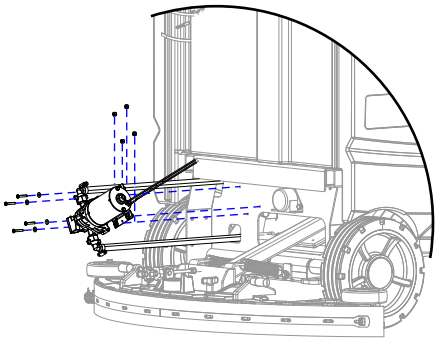

Requires Main Controller configuration: Yes

This adds a coiled water hose to the right of the operator's seat for off-machine washing. It also adds a fluid pump to the rear of the machine. Only one option pump can be installed at a time, so this option is not compatible with the Dust Guard option.

Deluxe Seat

Requires Main Controller configuration: No

This replaces the standard operator's seat with a deluxe (suspension) seat. It is not covered in the service manual.

Overhead Guard

Requires Main Controller configuration: No

The overhead guard replaces the standard crossbar. It is not covered in the service manual.

Heavy Duty Front Bumper

Requires Main Controller configuration: No

Replaces the flat bumper on the front of the machine. It is not covered in the service manual.

Onboard Charger

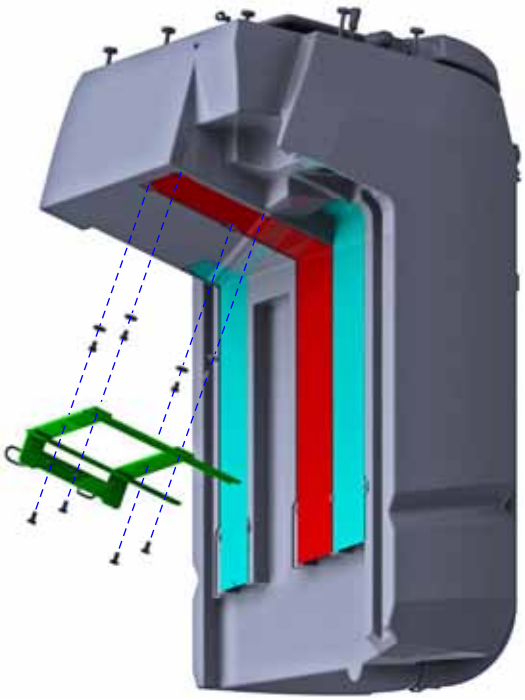

Requires Main Controller configuration: Yes

The onboard battery charger is located above the battery bay, and mounts on a removable slide that is attached to the recovery tank. The charger connects directly to the batteries. It also adds an interlock wire to the controller to prevent machine activation when the batteries are being charged. If the main controller is not properly configured for the charger, this interlock feature will not function.

Although not directly covered in the service manual, the charger is covered in the "Wiring Diagram" on page 79.

Battery Watering

Requires Main Controller configuration: No

Adds a watering manifold and fill valves to the battery fill caps. It also includes a removable hand pump. It is not covered by the service manual.

Solution Autofill

Requires Main Controller configuration: No

Adds a fill valve to the fill cap of the solution tank. It is not covered by the service manual.

Squeegee Guard

Requires Main Controller configuration: No

Adds a protective bumper behind the squeegee. The bumper can be raised as needed for working and clearance. The squeegee guard is not covered by the service manual.

Headlights

Requires Main Controller configuration: Yes

Adds LED headlights to the front of the machine, and controlled by the headlight switch on the control panel. The machine can also be configured for the lights to always be on. Although not directly covered, the headlight configuration is covered in the Options and Configuration menu sections of the Control chapter.

Backup Alarm

Requires Main Controller configuration: Yes

Adds a backup alarm to the rear of the machine above the squeegee.

Vac Wand

Requires Main Controller configuration: No

Adds a wand and hose holder to the rear of the recovery tank. This is not covered in the service manual.

USB Power Port

Requires Main Controller configuration: No

Adds a USB power port to the steering column below the steering wheel and includes a phone holder. This is power-only, and does not provide any communications delivery. The power port is not covered in the service manual.

TrackClean

Requires Main Controller configuration: Yes

Adds a telemetry module **(1A)** under the crossbar. This communicates with the main machine controller using a dedicated CAN Bus that only the TrackClean and Main Controller are connected to. The CAN Bus communication replaces the discrete wiring connections used with past TrackClean modules. The TrackClean module is not directly covered by the service manual.

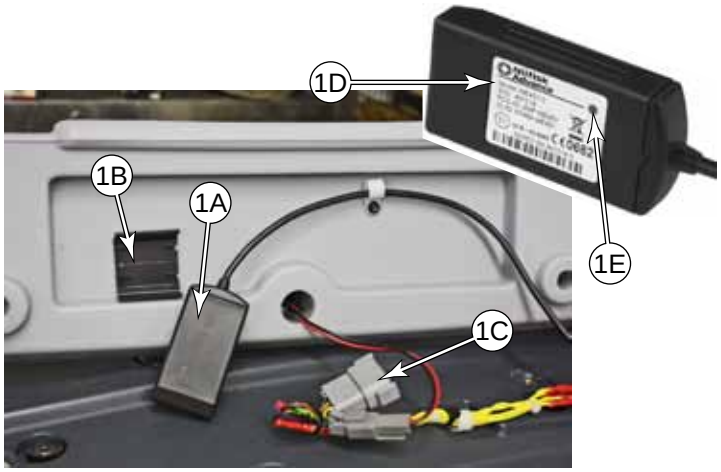

Although not directly covered, accessing the location and wiring of the module is shown in the procedure for the "Vacuum Motor" on page 130

Troubleshooting

Troubleshooting the TrackClean module requires accessing it via the Gateway Lite software program. The Gateway Lite program can be downloaded at: http://ts1.safetrack.dk/publish.htm. You will need to know the module's serial number **(1D & A)** printed on the back of the module.

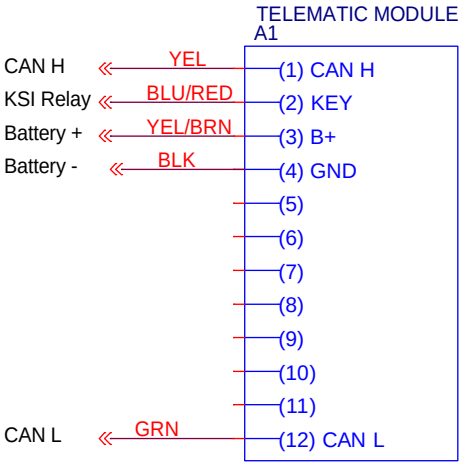

1. Verify that the TrackClean module is getting power and communicating with outside GPS and Cellular systems:
   a. With the machine powered up, observe the diagnostic 2-color LED **(1E)** on the module. If there is any difficulty in acquiring GSM or GPS signals, move the machine outdoors.
      - If the red LED is flashing and the green LED is steady, the unit is functioning properly and has both GSM and GPS signal.
      - If neither LED is lit, the unit has no power. Check the connector.
      - If the red LED is steady (not flashing), then there is no GSM (cellular) network connection.
      - If the green LED is not illuminated, there is no GPS signal.

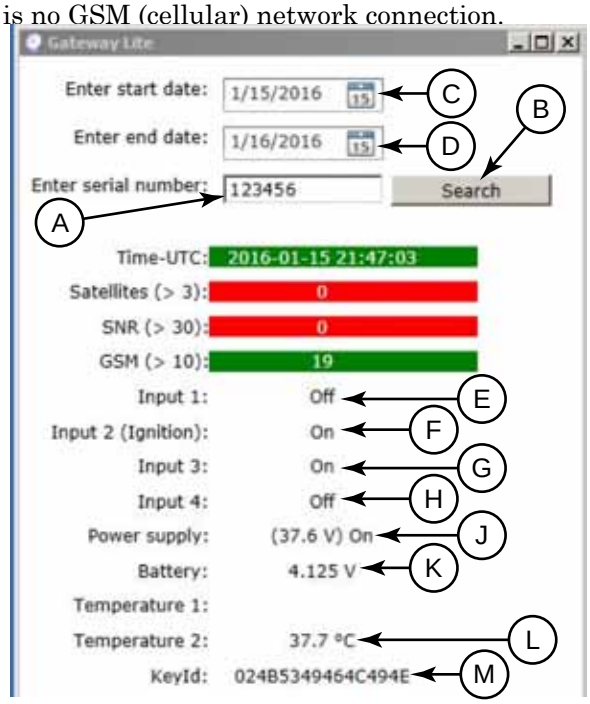

2. Use the Gateway Lite program to validate the reporting of the module:
   - With the main battery disconnected, verify the backup battery is providing power **(K)**.
   - With the main battery connected, verify machine battery voltage **(J)**. This is the main battery connection at Pin #3.
   - Turn the machine on. You should see Input 2 **(F)** go active. This is the KSI relay input.
   - If you see "Key ID" **(M)** or any other input change states, then you know that CAN Bus communication is functioning.
   - If some inputs are present but others missing, then you likely have a CAN Bus communication error or a main controller error.