T1581

Rider Floor Scrubber

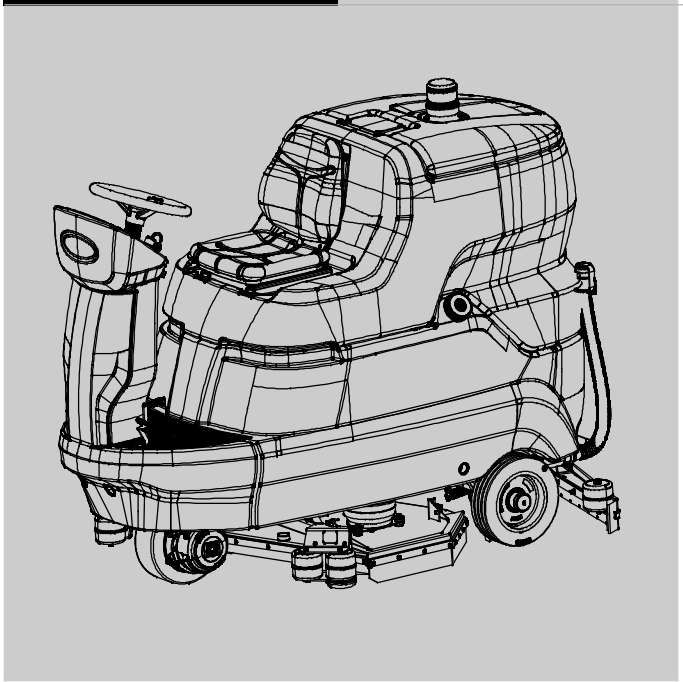

Parts Manual

Model Part No.:
LPTB03507 - SCRUBBER [T1581, 105CM DISK, W/O BATT, NA]
LPTB03508 - SCRUBBER [T1581, 100CM CYL, W/O BATT, NA]

Tennant*True*® Parts

North America

To view, print or download
the parts manual, visit:

www.tennantco.com/manuals

9022706
Rev. 01 (06-2024)

Only use TENNANT Company supplied or equivalent parts. Parts and supplies may be ordered online, by phone or from any Tennant Authorized Service Center or Distributor.

Before Ordering any parts or supplies, be sure to have the machine model number and serial number available.

Serial Number Label Location

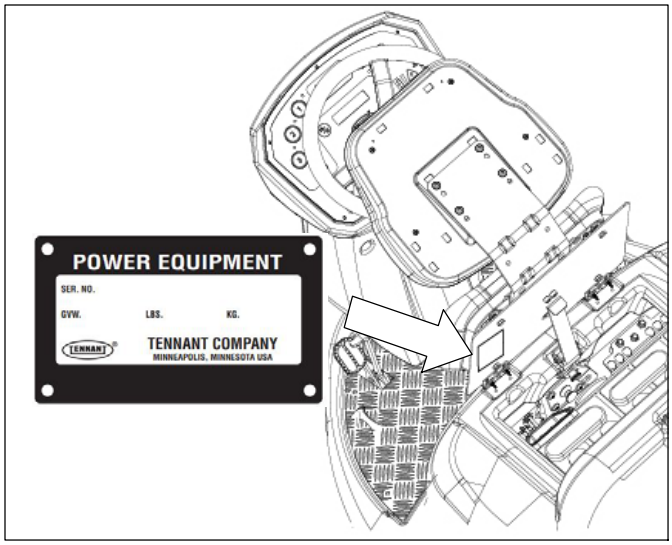

Tennant Company
10400 Clean Street
Eden Prairie, MN 55344-2650
USA
Phone: (800) 553-8033
www.tennantco.com

Specifications and parts are subject to change without notice.

Copyright © 2024 TENNANT Company

RECOMMENDED SPARE PARTS LIST 2
BRUSHES / PAD DRIVER AND PADS 5
RECOVERY TANK GROUP 6
SOLUTION TANK GROUP 8
SEAT GROUP 10
FRAME GROUP 12
DRIVE WHEEL GROUP 14
DRIVE WHEEL BREAKDOWN 16
REAR WHEEL GROUP 18
SCRUB HEAD LIFT AND BUMPER GROUP (90cm Disk Model) 20
SCRUB HEAD LIFT AND BUMPER GROUP (75cm Cylindrical Brush Model) 22
SIDE BRUSH GROUP (75cm Cylindrical Brush Model) 24
SQUEEGEE LIFT BRACKET GROUP 28
ACCELERATOR PEDAL GROUP 30
SCRUB HEAD GROUP (90cm Disk Model) 32
SCRUB HEAD GROUP (75cm Cylindrical Brush Model) 36
SQUEEGEE GROUP (90cm Disk Model) 40
SQUEEGEE GROUP (75cm Cylindrical Brush Model) 42
CONTROL PANEL GROUP 44
STEERING COLUMN GROUP (90CM Disk Model) 46
STEERING COLUMN GROUP (75CM Cylindrical Brush Model) 48
ELECTRICAL COMPONENT GROUP (90CM Disk Model) 50
ELECTRICAL COMPONENT GROUP (75CM Cylindrical Brush Model) 52
BATTERY COMPARTMENT GROUP (90CM Disk Model) 54
BATTERY COMPARTMENT GROUP (75CM Cylindrical Brush Model) 56
MANUAL BATTERY WATERING SYSTEM (OPTION) 58
ELECTRICAL DIAGRAM 60

GENERAL RECOMMENDED MAINTENANCE ITEMS

	Part No.	Mfr. Date	Description	Qty.
	KTRI06595	( )	Squeegee Assy, W/ Blade, Linatex	1
	MPVR06557	( )	Blade, Sqge, Linatex, Front	1
	MPVR05908	( )	Blade, Sqge, Front, Latex	1
	MPVR05934	( )	Blade, Sqge, Front, Pu	1
	MPVR06558	( )	Blade, Sqge, Linatex, Rear	1
	MPVR05909	( )	Blade, Sqge, Rear, Latex	1
	MPVR05935	( )	Blade, Sqge, Rear, Pu	1
	1043662	( )	Charger, 36vdc 21a 85- 265vac 1ph 45/65hz	1
	1017079	( )	Cord, Extn, 16ga /3, 10ft [Sjt]	1
	1070587	( )	Battery, Wet, 06vdc 0360ah, W/ Carton	1
	1262287	( )	Battery, Agm, 06vdc 350ah	1
	897357	( )	Cable, 390l, M8ring/M8ring	1
▽	MOCC00385	( )	Wheel Assy, Drive, Ele, 36vdc 37a 1100w	1
▲	MEVR34439	( )	Brush Kit, Motor	4
▲	RTRT00442	( )	Tire, 300x100	1
▲	CUVR00194	( )	Bearing, Ball, 130b, 180d, 24w	1
▽	MOCC00495	( )	Fan, Vacuum, 36vdc 650w	1
▲	MEVR02612	( )	Motor, Vacuum, Carbon Brush	1
	FTDP00880	( )	Filter, Panl, Dust, 2.3 X 04.5 X 06.4	1
	GUGO00509	( )	Gasket, Vacuum, Motor	1
	TBFX01361	( )	Hose, Recvy, 50id 1540l	1
	GUGO00722	( )	Seal, Recvy, Lid, 2140mm	1
▽	FTAC00038	( )	Filter Assy, Soltn	1
▲	FTAC00047	( )	Filter, Soltn	1
	9017737	( )	Sensor, Float, Shutoff	1
	KTRI02131	( )	Sensor	1
	TBBP00487	( )	Hose Assy, Drain, 50id 1210l	1
	KTRI05576	( )	Potentiometer, 100k	1
	MECB01227	( )	Potentiometer, 5k	1
	MECB01228	( )	Switch, Micro	1
	MEEV00043	( )	Valve, Solenoid	1
	RTRT00518	( )	Caster, Swivel, 77d 30w	2
	MPVR07212	( )	Muffler, Vacfan	1
	TBBP00391	( )	Hose, Soltn, Tank	1
	MOCC00394	( )	Actuator, 36vdc, 500n, 59mm	1
	MOCC00388	( )	Actuator, Brush, Head, 36v 1500n	1
	RTRT00795	( )	Wheel, 305d 25b 80w	2
	PPEL00025	( )	Pump, Ele, 36vdc, 12l/M, 0.1bar	1

GENERAL RECOMMENDED MAINTENANCE ITEMS

Part No.	Mfr. Date	Description	Qty.
MECE00526	( )	Controller, Power	1
KTRI06405*	( )		1
KTRI06415	( )	Kit, Display Board	1
KTRI06416*	( )		1
KTRI06417*	( )		1
METT00086	( )	Contactor, 100a	1
CUVR00187	( )	Bearing, Ball, 40b 68d 19w	2
GUGO00702	( )	Gasket, Panel, Control	1
METT00135	( )	Fuse, 2a	1
METT00138	( )	Fuse, 50a	2
METT00132	( )	Circuitbreaker, 30a	1
MEVR00146	( )	Housing, Fuse	1
MEVR01925	( )	Fuse, 150a	1
MEVR00145	( )	Fuse, 100 A, 6.3 68.6l	1

105CM DISK MODEL RECOMMENDED MAINTENANCE ITEMS

	Part No.	Mfr. Date	Description	Qty.
	SPPV01545	( )	Brush, Disk, Ppl, 53cm	2
	SPPV01546	( )	Brush Assy, Disk, Medium, 21d	2
	SPPV01547	( )	Brush, Abrv, 53cm (Tynex 120)	2
	SPPV01548	( )	Brush, Abrv, 53cm (Tynex 240)	2
	SPPV01549	( )	Brush, Abrv, 53cm (Tynex 320)	2
	SPPV01550	( )	Brush, Disk, Pes, Mix 5, 48cm	2
	SPPV01154	( )	Pad Holder, 53cm	2
	1266517	( )	Pad, Buff, 21.0d, Red (qty 5)	1
	1266518	( )	Pad, Polish, 21.0d, White (qty 5)	1
	1266519	( )	Pad, Scb, 21.0d, Blue (qty 5)	1
	1266520	( )	Pad, Strip, 21.0d, Brown (qty 5)	1
	1266521	( )	Pad, Strip, 21.0d, Black (qty 5)	1
	MPVR05037	( )	Skirt, Lh	1
	MPVR05038	( )	Skirt, Rh	1
	MPVR05035	( )	Skirt, Rear	1
∇	MOCC00195	( )	Motor, Brush, Ele, 36v 550w	2
▲	MEVR05203	( )	Brush Kit, Motor	2

100CM CYLINDRICAL MODEL RECOMMENDED MAINTENANCE ITEMS

	Part No.	Mfr. Date	Description	Qty.
	SPPV01330	( )	Brush, Scb, 180d 984l	2
	SPPV01331	( )	Brush, Cyl, Med, Ppl, 100cm	2
	SPPV00018	( )	Brush, Swp, Side, Pyp [838r- 858r]	2
	SPPV00019	( )	Brush, Swp, Side Pyp/Wir [838r- 858r]	2
	MPVR06263	( )	Skirt, Side, Lh	1
	MPVR06262	( )	Skirt, Side, Rh	1
	MPVR06304	( )	Coupling, Drive, Shaft	1
	MPVR06304	( )	Coupling, Drive, Shaft	1
	KTRI05006	( )	Kit, Driver Roll	2
	LAFN08087	( )	Plug, Idler, Brush	2
∇	MOCC00421	( )	Motor, Ele, 36vdc 2200rpm 1200w	1
▲	MOCC00344	( )	Motor, Carbon Brushes	1
	MTCG00137	( )	Belt, Synchronous	1
	CUVR46942	( )	Bearing, Brush, Main	2
	CUVR19846	( )	Bearing, Ball, 20b 42d 12w, 6004- 2rs1	8
	MOCC00367	( )	Motor, Ele, 36vdc 95rpm 60w, Lh	1
	MOCC00366	( )	Motor, Ele, 36vdc 95rpm 60w, Rh	1

BRUSHES / PAD DRIVER AND PADS

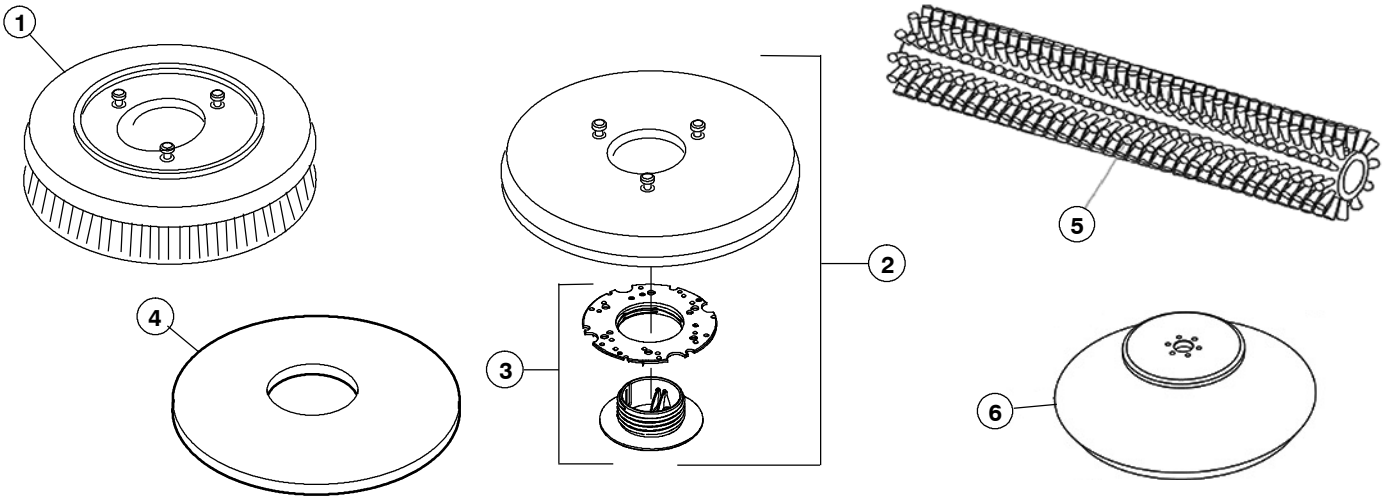

105cm Disk Model

	Ref.	Part No.	Mfr. Date	Description	Qty.
	1	SPPV01545	( )	Brush Assy, Disk, PPL, Soft, 53cm	2
	1	SPPV01546	( )	Brush Assy, Disk, PPL, Medium, 53cm	2
	1	SPPV01547	( )	Brush, Abrv, 53cm (Tynex 120)	2
	1	SPPV01548	( )	Brush, Abrv, 53cm (Tynex 240)	2
	1	SPPV01549	( )	Brush, Abrv, 53cm (Tynex 320)	2
	1	SPPV01550	( )	Brush, Disk, Pes, Mix 5, 48cm	2
∇	2	SPPV01154	( )	Pad Holder, 53cm	2
▲	3	MPVR04717	( )	Screw, Fixed, Disk	1
	4	1266517	( )	Pad, Buff, 21.0d, Red (qty 5)	1
	4	1266518	( )	Pad, Polish, 21.0d, White (qty 5)	1
	4	1266519	( )	Pad, Scb, 21.0d, Blue (qty 5)	1
	4	1266520	( )	Pad, Strip, 21.0d, Brown (qty 5)	1
	4	1266521	( )	Pad, Strip, 21.0d, Black (qty 5)	1

100cm Cylindrical Brush Model

Ref.	Part No.	Mfr. Date	Description	Qty.
5	SPPV01330	( )	Brush, Cyl, Soft, 100cm (qty 2)	2
5	SPPV01331	( )	Brush, Cyl, Med, 100cm (qty 2)	2
6	SPPV00018	( )	Brush, Swp, Side, Pyp [838r- 858r]	2
6	SPPV00019	( )	Brush, Swp, Side Pyp/Wir [838r- 858r]	2

∇ ASSEMBLY

▲ INCLUDED IN ASSEMBLY

RECOVERY TANK GROUP

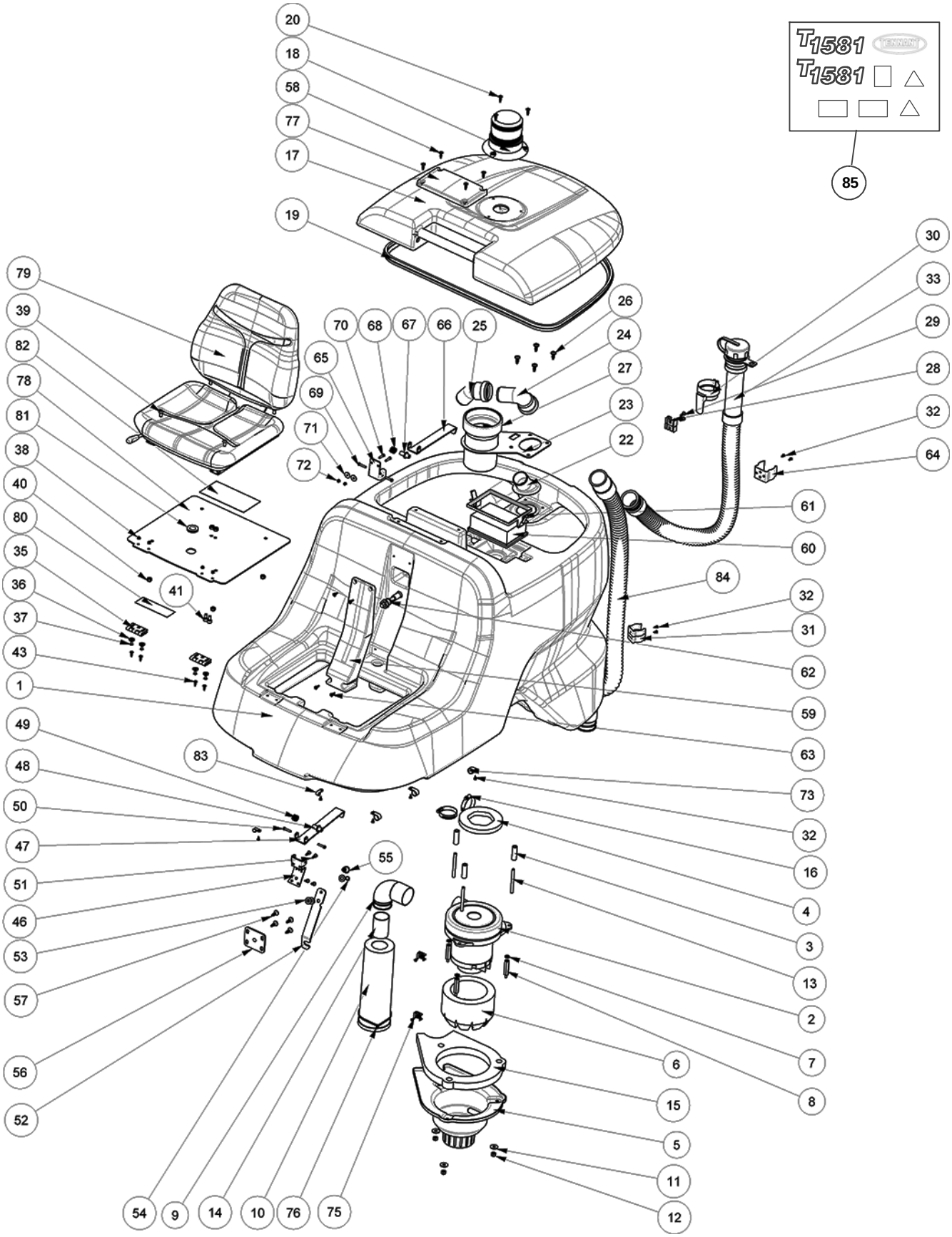

RECOVERY TANK GROUP

	Ref.	Part No.	Mfr. Date	Description	Qty.
	1	MPVR13428	( )	Tank, Recvy [T1581]	1
∇	2	MOCC00495	( )	Fan, Vacuum, 36vdc 650w	1
▲		MEVR02612	( )	Motor, Vacuum, Carbon Brush	1
	3	LAFN03760	( )	Spacer, 8.25b 15d 47.5l	3
	4	GUGO00509	( )	Gasket, Vacuum, Motor	1
	5	MPVR13460	( )	Cover, Vacfan	1
	6	ITSO00110	( )	Insulation, Acstc	1
	7	897216	( )	Washer, 8b, Ss, Uni1751	3
	8	LAFN11920	( )	Stand- Off, Hex, M6 Mal, M8 Fem, 52l	3
	9	MPVR13497	( )	Tube, Vacfan, E90	1
	10	MPVR07212	( )	Muffler, Vacfan	1
	11	897120	( )	Washer, Flat, 24d 8b, Ss, Uni6593	3
	12	VTDD01701	( )	Nut, Hex, M8, Ss	3
	13	VTVR01089	( )	Stud, Thrd, M8 X 90	3
	15	ITSO00111	( )	Insulation, Acstc	1
	16	897448	( )	Clamp, Hose, Wormdrive, 45 - 60d	2
	17	MPVR13429	( )	Cover, Recvy, Tank [T1581]	1
	18	MELF00053	( )	Light, Flsh	1
	19	GUGO00722	( )	Seal, Recvy, Lid, 2140mm	1
	20	VTVT01591	( )	Screw, Pan, Torx, 6x20, Fmg, Kn1038	3
	22	MPVR13448	( )	Fitting, Flng	1
	23	LAFN11884	( )	Bracket, Filter	1
	24	RCVR00764	( )	Fitting	1
	25	RCVR00765	( )	Fitting	1
	26	VTVT01430	( )	Screw, Pan, Torx, 8x22, Fmg, Kn1038	4
	27	FTAC00082	( )	Filter, Debris, Mesh	1
	28	MPVR11684	( )	Mount, Hose, Drain	1
	29	VTVT01073	( )	Screw, Pan, Torx, 6x16, Fmg, Kn1039	2
	30	MPVR13105	( )	Clip, Hose, 56d	1
	31	9017721	( )	Clip, Hose, Recvy	1
	32	VTVT48694	( )	Screw, M5x12, Uni9707	11
	33	TBBP00487	( )	Hose Assy, Drain, 50id 1210l	1
	35	CEVR00060	( )	Hinge, Seat	2
	36	897152	( )	Washer, 8d, Ss, Uni6592	4
	37	897658	( )	Screw, Flt, Soc, M5x12, Uni5933	4
	38	VTDD01693	( )	Nut, Hex, M5, Ss	4
	39	VTVT00779	( )	Screw, Btn, M8x16, Ss, Iso7380	4
	40	VTDD01701	( )	Nut, Hex, M8, Ss	6
	41	897347	( )	Screw, Soc, M8x16	2
	43	VTVT01072	( )	Screw, Pan, Torx, 5x16, Fmg, Kn1038	4
	46	LAFN11886	( )	Bracket	1
	47	LAFN11169	( )	Bracket, Tank, Cover	1
	48	LAFN11170	( )	Sleeve, M5b 12d 35l	1
	49	MLML00488	( )	Spring, Tors, 16d 2wir 7coil	1

∇ ASSEMBLY

▲ INCLUDED IN ASSEMBLY

RECOVERY TANK GROUP - Contd

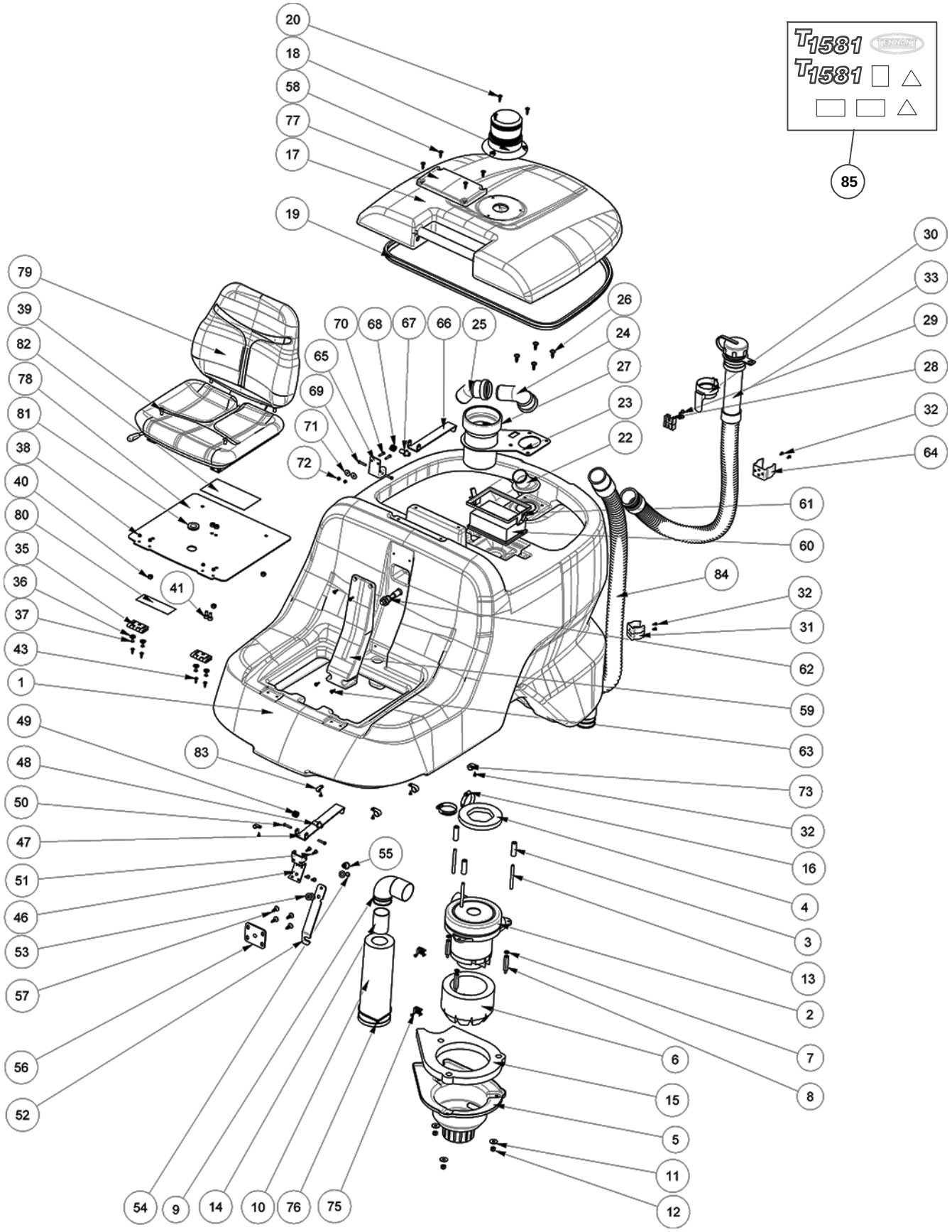

RECOVERY TANK GROUP - Contd

Ref.	Part No.	Mfr. Date	Description	Qty.
50	VTVT00766	( )	Screw, Hex, M5x25	2
51	VTVT01073	( )	Screw, Pan, Torx, 6x16, Fmg, Kn1039	4
52	LAFN11887	( )	Lever	1
53	897432	( )	Washer, 10b, 21d, Ss, Uni6592	3
54	VTAE87276	( )	Ring, Retaining, Ext, 10d, Din471	1
55	PIVR00025	( )	Piston	1
56	LAFN11888	( )	Plate Wldt	1
57	VTVT01430	( )	Screw, Pan, Torx, 8x22, Fmg, Kn1038	4
58	VTVT01591	( )	Screw, Pan, Torx, 6x20, Fmg, Kn1038	4
59	MPVR13450	( )	Cover, Recvy, Tank	1
60	1037821	( )	Filter, Panl, Dust, 2.3 X 04.5 X 06.4	1
61	MPVR13447	( )	Frame, Filter	1
62	9017737	( )	Sensor, Float, Shutoff	1
63	VTVT01072	( )	Screw, Pan, Torx, 5x16, Fmg, Kn1038	4
64	FSVR44166	( )	Clip, Hose, 54d	1
65	LAFN11889	( )	Bracket, Lever	1
66	LAFN11169	( )	Bracket, Tank, Cover	1
67	LAFN11170	( )	Sleeve, M5b 12d 35l	1
68	MLML00488	( )	Spring, Tors, 16d 2wir 7coil	1
69	VTVT00766	( )	Screw, Hex, M5x25	2
70	897170	( )	Screw, Hex, M5x20	2
71	VTVR00636	( )	Washer, Flat, 5b, 20d, Ss, Uni5693	2
72	VTDD01693	( )	Nut, Hex, M5, Ss	2
73	897137	( )	Clamp	3
75	FSVR00243	( )	Base, Mtg, Tie, Plstc	2
76	FSVR00247	( )	Clamp, 4.5x360	1
77	MPVR13449	( )	Cover, Recvy, Lid	1
78	LAFN12078	( )	Bracket	1
79	SESD45982	( )	Seat, Sensor	1
80	N/A	( )		1
81	MEVR00660	( )	Grommet	1
82	N/A	( )		1
83	897334	( )	Clamp, Cable, 9.5d	2
84	KTRI06685	( )	Hose Assy, Recvy [T1581]	1
85	KTRI06603	( )	Label, Kit [T1581]	1

SEAT GROUP

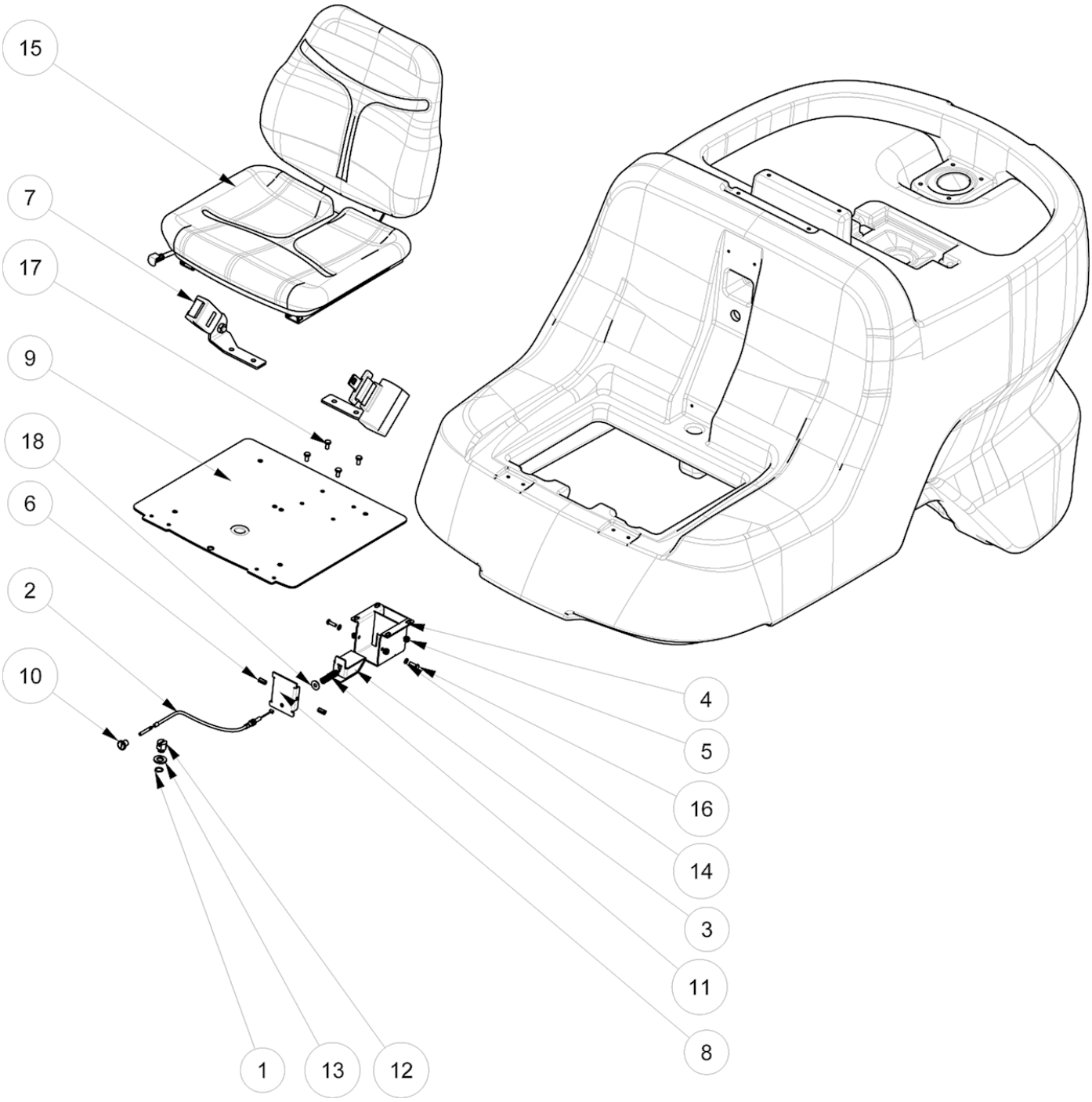

SEAT GROUP

Ref.	Part No.	Mfr. Date	Description	Qty.
1	VTAE00051	( )	Nut, Shaft D.12 U 7435	1
2	CMCV00491	( )	Cable	1
3	LAFN12080	( )	Bracket	1
4	LAFN12079	( )	Bracket	1
5	897105	( )	Nut, Hex, M6, Ss	4
6	VTVR00564	( )	Insert	2
7	KTRI06665	( )	Seatbelt Kit, Retractable	1
8	LAFN12081	( )	Bracket	1
9	LAFN12078	( )	Bracket	1
10	MPVR13689	( )	Knob	1
11	MLML00033	( )	Spring, Cmpr, 11d 1.2wir 44l	1
12	LAFN12082	( )	Bracket	1
13	897215	( )	Washer, 24d 12b, Ss, Uni6592	1
14	897166	( )	Washer, 5d, Ss	2
15	SESD45982	( )	Seat, Sensor	1
16	897145	( )	Screw, Hex, M5x16, Ss, Uni5739	2
17	897130	( )	Screw, Hex, M6x12, Uni5739	4
18	897112	( )	Washer, Flat, 18d 6b 1.6, Uni6593	1

SOLUTION TANK GROUP

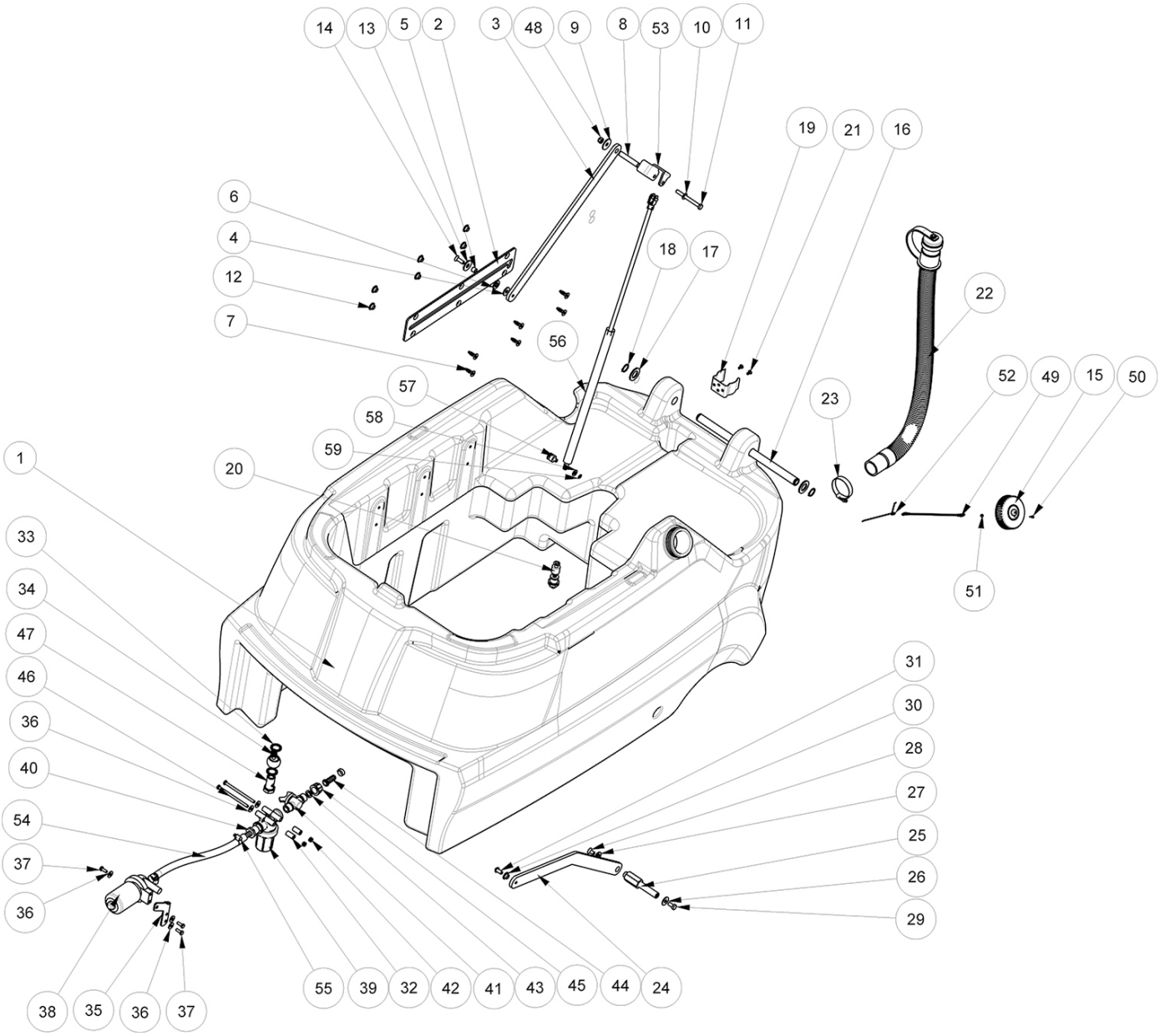

SOLUTION TANK GROUP

	Ref.	Part No.	Mfr. Date	Description	Qty.
	1	MPVR13427	( )	Tank, Soltn [T1581]	1
	2	LAFN11878	( )	Plate, Guide	1
	3	LAFN11879	( )	Plate, Link, Soltn, Tank	1
	4	897120	( )	Washer, Flat, 24d 8b, Ss, Uni6593	1
	5	LAFN09160	( )	Bushing, 8b 12d 10l	1
	6	897215	( )	Washer, 24d 12b, Ss, Uni6592	2
	7	VTVT01608	( )	Screw, 8x25, Kn6041	6
	8	LAFN09162	( )	Spacer	1
	9	897375	( )	Washer, 32d 8b, Ss, Uni6593	1
	10	897152	( )	Washer, 8d, Ss, Uni6592	1
	11	VTVT00734	( )	Screw, Hex, M8x80	1
	12	897218	( )	Bushing, Flng, 8.2b 12d 7.8l	6
	13	897391	( )	Washer 10d	1
	14	VTVT00781	( )	Screw, Flt, Soc, M8x25	1
	15	MPVR13483	( )	Cap, Soltn, Tank	1
	16	LAFN11881	( )	Pin, 20d 345l	1
	17	897288	( )	Washer, 20d, Ss, Uni6592	2
	18	VTAE00105	( )	Ring, Retaining, Ext, 20d, Ss, Uni7435	2
	19	FSVR44166	( )	Clip, Hose, 54d	1
	20	KTRI02131	( )	Sensor	1
	21	VTVT01432	( )	Screw, M5x10	2
	22	TBBP00391	( )	Hose, Soltn, Tank	1
	23	FSVR00095	( )	Clamp, Wormdrive, 30- 45d	1
	24	LAFN11882	( )	Plate, Linkage	1
	25	LAFN11883	( )	Pin, Hex, 15.5d 114l M8	1
	26	897120	( )	Washer, Flat, 24d 8b, Ss, Uni6593	1
	27	897215	( )	Washer, 24d 12b, Ss, Uni6592	1
	28	897394	( )	Screw, Flt, Soc, M8x16	1
	29	897184	( )	Screw, Hex, M8x16, Uni5739	1
	30	897218	( )	Bushing, Flng, 8.2b 12d 7.8l	1
	31	VTVT00779	( )	Screw, Btn, M8x16, Ss, Iso7380	1
	32	LAFN09490	( )	Spacer, 6.2b 12d 23l	2
	33	897458	( )	Washer	2
	34	RCDS34666	( )	Fitting, Banjo, 8.5id 16od	1
	35	LAFN09210	( )	Bracket, Pump	1
	36	897112	( )	Washer, Flat, 18d 6b 1.6, Uni6593	5
	37	897128	( )	Screw, Hex, M8x40, Uni5739	3
	38	PPEL00025	( )	Pump, Ele, 36vdc, 12l/M, 0.1bar	1
∇	39	FTAC00038	( )	Filter Assy, Soltn	1
▲		FTAC00047	( )	Filter, Soltn	1

∇ ASSEMBLY
▲ INCLUDED IN ASSEMBLY

SOLUTION TANK GROUP - Contd

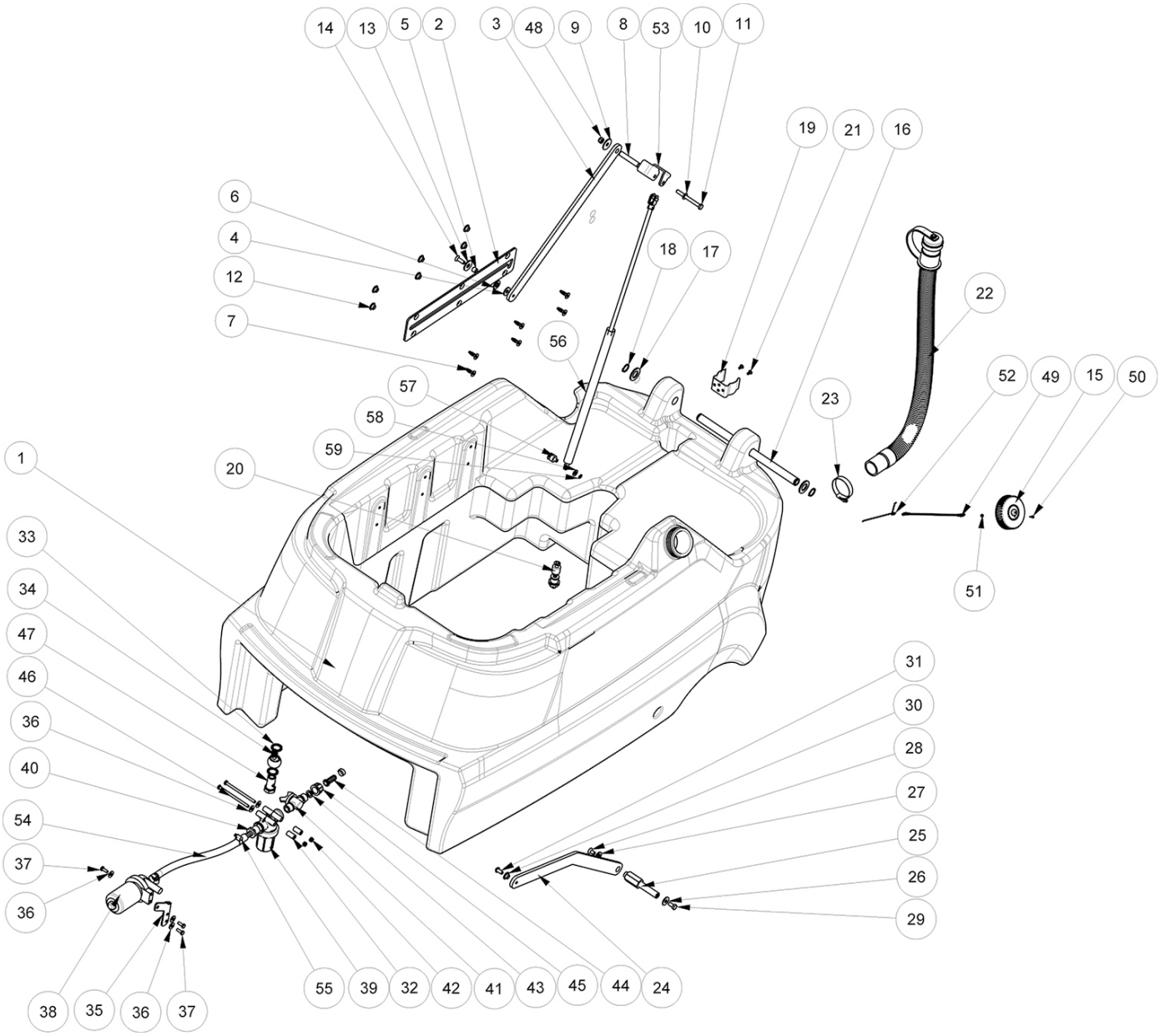

SOLUTION TANK GROUP - Contd

Ref.	Part No.	Mfr. Date	Description	Qty.
40	RCVR00547	( )	Fitting, Str	1
41	9018454	( )	Valve, Water, Soltn	1
42	897105	( )	Nut, Hex, M6, Ss	2
43	GUGO00427	( )	Gasket, Valve, Soltn	1
44	RCVR00744	( )	Fitting, Plstc, Str	1
45	MPVR05240	( )	Nut, Ring	1
46	VTVT01437	( )	Screw, Hex, M6x100	2
47	RCDS40286	( )	Bolt, Banjo	1
48	VTDD01701	( )	Nut, Hex, M8, Ss	1
49	LAFN12018	( )	Chain, 200l	1
50	897203	( )	Screw, M3, Ss	1
51	9018496	( )	Nut, Hex, Lock, M3, Nl Din985	1
52	LAFN12017	( )	Spring, Tors, 8.4id 1.6wir 1coil	1
53	LAFN12011	( )	Bracket, Spring, Gas	1
55	FSVR00096	( )	Clamp, Hose, Ss, 10- 16d	2
56	MLML00551	( )	Spring, Gas, 500n, 380mm Strk	1
57	LAFN12010	( )	Pin, 8d 26.3l	1
58	897152	( )	Washer, 8d, Ss, Uni6592	1
59	VTAE00059	( )	Ring	1

FRAME GROUP

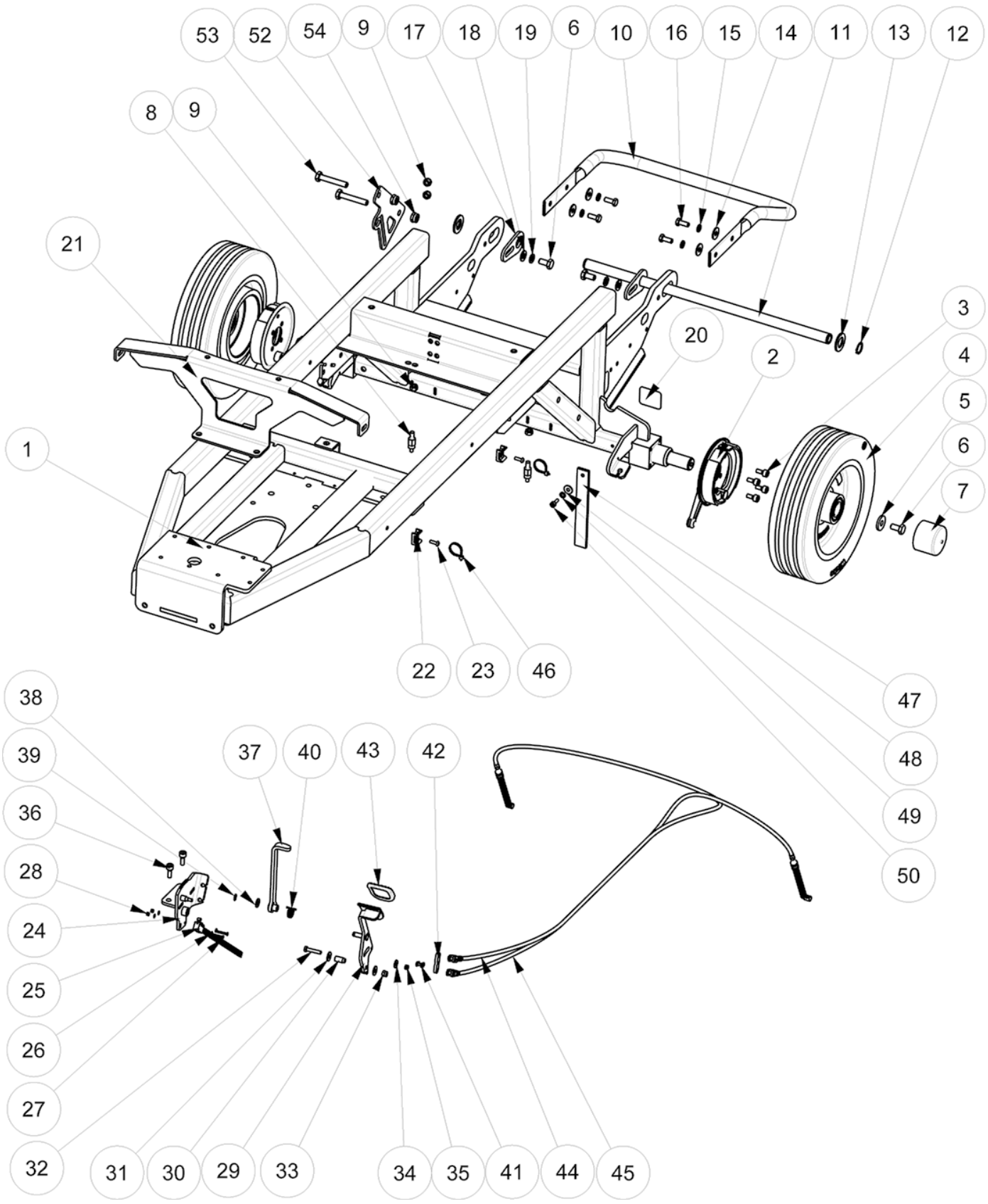
53
52
54
9
17
18
19
6
10
16
15
14
11
13
12
8
9
21
3
4
5
6
7
20
2
1
22
23
46
47
48
49
50
38
39
36
28
24
25
26
27
32
31
30
29
33
37
40
43
42
34
35
41
44
45

FRAME GROUP

Ref.	Part No.	Mfr. Date	Description	Qty.
1	LAFN11872	( )	Frame, Main	1
2	RTRT45090	( )	Brake, Drum	2
3	897347	( )	Screw, Soc, M8x16	8
4	RTRT00795	( )	Wheel, 305d 25b 80w	2
5	LAFN04144	( )	Washer, M10, Rear Wheel	2
6	VTVT13936	( )	Screw, Hex, M10x20	4
7	MPVR12162	( )	Cap, Hub, Wheel	2
8	LAFN11739	( )	Stand- Off, M6 M8, 45.5l	2
9	VTDD01701	( )	Nut, Hex, M8, Ss	4
10	LAFN11876	( )	Bumper	1
11	LAFN11877	( )	Shaft, Tank	1
12	VTAE00105	( )	Ring, Retaining, Ext, 20d, Ss, Uni7435	2
13	897288	( )	Washer, 20d, Ss, Uni6592	2
14	897120	( )	Washer, Flat, 24d 8b, Ss, Uni6593	4
15	897216	( )	Washer, 8b, Ss, Uni1751	4
16	897316	( )	Screw, Hex, M8x20, Ss, Uni5739	4
17	LAFN11875	( )	Plate, Pin, Rotation	2
18	897432	( )	Washer, 10b, 21d, Ss, Uni6592	2
19	897392	( )	Washer, 10d	2
20	N/A	( )		2
21	LAFN11873	( )	Bracket, Front	1
22	FSVR00243	( )	Base, Mtg, Tie, Plstc	2
23	897329	( )	Screw, M5x16, Ss	2
24	LAFN05766	( )	Bracket Wldt, Pedal	1
25	MECI44780	( )	Switch, Micro	1
26	VTRS00385	( )	Washer, 7d 3.2b 0.5, Ss, Uni6592	4
27	VTVT01350	( )	Screw, M3x20, Ss	2
28	9018496	( )	Nut, Hex, Lock, M3, Nl Din985	2
29	LAFN05767	( )	Pedal Wldt, Brake	1
30	LAFN04142	( )	Sleeve, 6.2b 10d 20l	1
31	897112	( )	Washer, Flat, 18d 6b 1.6, Uni6593	2
32	VTVT00433	( )	Screw, Hex, M6x30, Ss, Uni5739	1
33	08712	( )	Nut, Hex, Lock, M6 X 1.00, Nl, Ss	1
34	897384	( )	Washer, 5b, 14d, Ss	1
35	VTDD01693	( )	Nut, Hex, M5, Ss	1
36	897377	( )	Screw, Soc, M8x20, Ss, Uni5931	2
37	LAFN51019	( )	Pedal, Lock	1
38	897152	( )	Washer, 8d, Ss, Uni6592	1
39	VTAE14096	( )	Ring, Retaining, Ext, 8id, Din471	1

FRAME GROUP - Contd

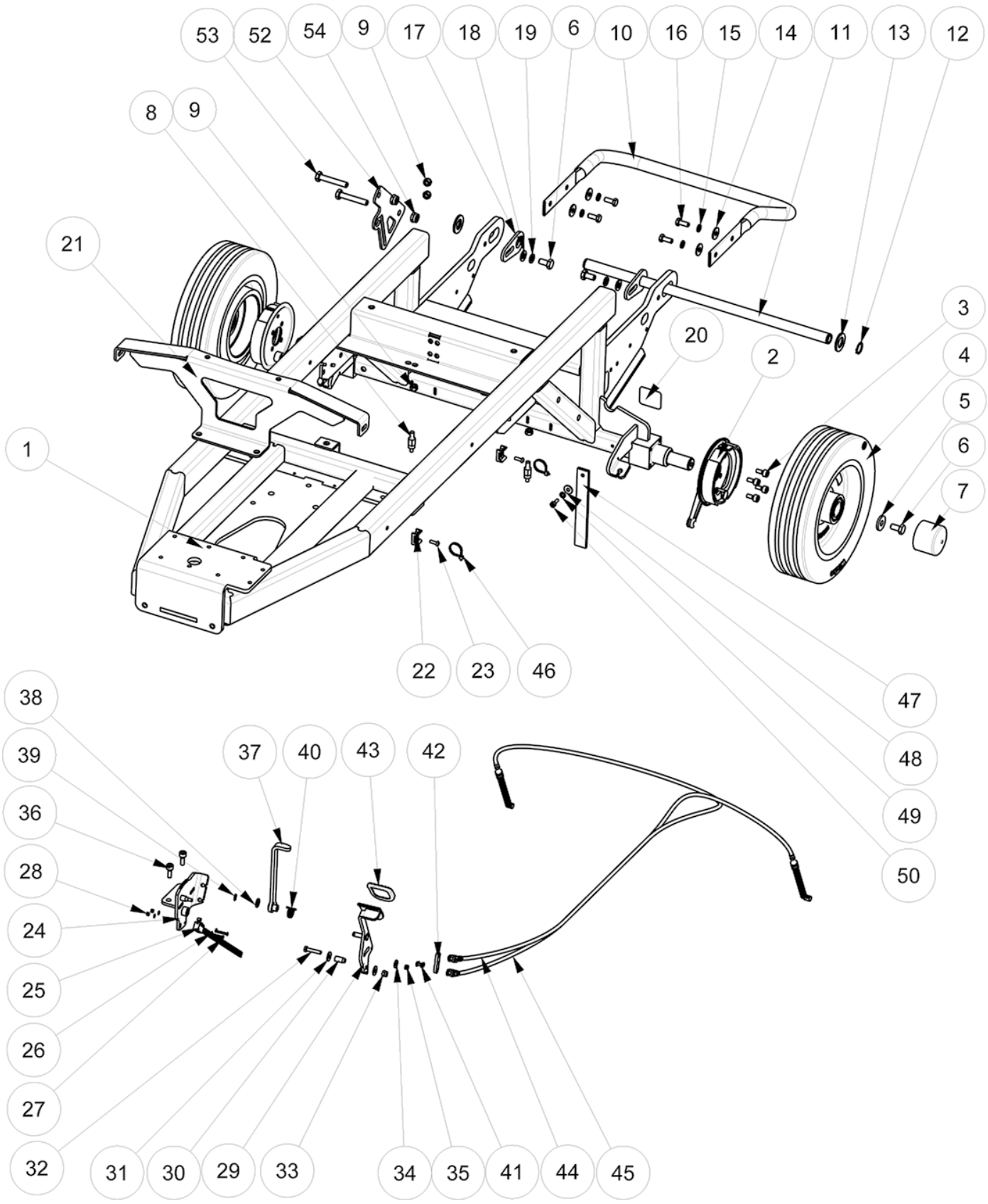

FRAME GROUP - Contd

Ref.	Part No.	Mfr. Date	Description	Qty.
40	MLML00237	( )	Spring, Tors, 15d 2wir 3coil	1
41	MTCR47037	( )	Link, Chain, Steering	1
42	LAFN05769	( )	Plate, Brake, Cable	1
43	MPVR45096	( )	Cover, Pedal, Lrg	1
44	CMCV00334	( )	Cable, Brake, 1915mm, Rh	1
45	CMCV00335	( )	Cable, Brake, 1425mm, Lh	1
46	FSVR00050	( )	Tie, Cable, 3.5 X 140	2
47	MPVR04693	( )	Strap, Static, 25 X 5, 180l	1
48	897112	( )	Washer, Flat, 18d 6b 1.6, Uni6593	1
49	897129	( )	Washer, M6, Ss, Uni1751	1
50	897352	( )	Screw, Soc, M6x16	1
52	LAFN12009	( )	Plate, Spring, Gas	1
53	VTVT00068	( )	Screw, Hex, M10x60, Uni5739	2
54	VTDD10310	( )	Nut, Hex, Lock, M10, Ss, Din985	2

DRIVE WHEEL / STEERING GROUP

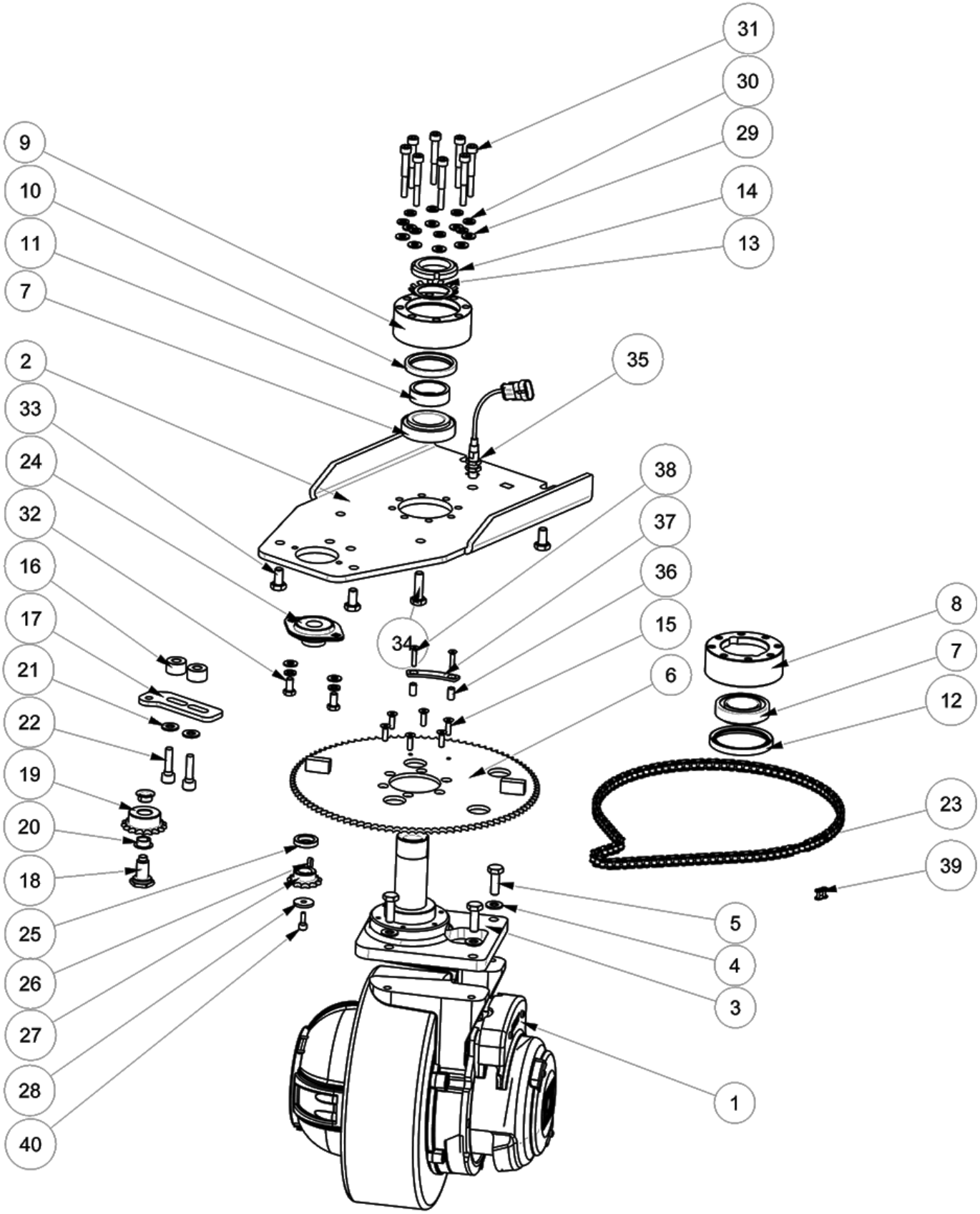

DRIVE WHEEL / STEERING GROUP

Ref.	Part No.	Mfr. Date	Description	Qty.
1	MOCC00385	( )	Wheel Assy, Drive, Ele, 36vdc 37a 1100w	1
2	LAFN11898	( )	Bracket, Steering	1
3	LAFN06994	( )	Shaft Wldt, Steering	1
4	897432	( )	Washer, 10b, 21d, Ss, Uni6592	4
5	VTVT01541	( )	Screw, Hex, M10x30, Ss, Uni5739	4
6	LAFN06995	( )	Sprocket, Steering	1
7	CUVR00187	( )	Bearing, Ball, 40b 68d 19w	2
8	LAFN08830	( )	Housing, Brg	1
9	LAFN08829	( )	Housing, Brg	1
10	PVVR00045	( )	Seal, Brg	1
11	LAFN08828	( )	Bushing, 40b 50d 15.5l	1
12	PVVR00044	( )	Seal, Brg	1
13	VTRS00572	( )	Washer	1
14	VTVR00563	( )	Nut, Ring	1
15	897277	( )	Screw, Flt, Soc, M6x20, Uni5933	6
16	LAFN11197	( )	Spacer, 10.5b 25d 15l	2
17	LAFN11195	( )	Plate, Tensioner, Chain	1
18	LAFN11196	( )	Bolt, Shld, 15d X 26l, M10	1
19	MTPL00238	( )	Sprocket, Steering, 17tooth	1
20	CUVR00192	( )	Bushing, Flng	2
21	897432	( )	Washer, 10b, 21d, Ss, Uni6592	2
22	VTVT00411	( )	Screw, Soc, Hex, M10x35, Uni5931	2
23	MTCR00085	( )	Chain, 3/8”, 1062.59mm	1
24	897283	( )	Bearing, Flng, 2 Hole	1
25	LAFN07029	( )	Spacer, 20.2b 30d 6.3l	1
26	VTVR00229	( )	Key, 5 X 5, 12l	1
27	MTCR00070	( )	Sprocket, Steering	1
28	LAFN04134	( )	Washer, M6, Pinion, Steering	1
29	897152	( )	Washer, 8d, Ss, Uni6592	10
30	897216	( )	Washer, 8b, Ss, Uni1751	10
31	VTVT01310	( )	Screw, Hex, Soc, M8x60, Ss, Uni5931	8
32	897184	( )	Screw, Hex, M8x16, Uni5739	2
33	VTVT13936	( )	Screw, Hex, M10x20	4
34	VTVT00458	( )	Screw, Hex, M10x35, Un5739	2
35	MECI00779	( )	Sensor, Steering, 24- 36v [T1581]	1
36	LAFN03742	( )	Spacer, 6.2b 8d 14l	2
37	LAFN08836	( )	Plate	1
38	VTVT15962	( )	Screw, Flt, Soc, M5x25, Uni5933	2
39	MTCR47037	( )	Link, Chain, Steering	1
40	897352	( )	Screw, Soc, M6x16	1

DRIVE WHEEL BREAKDOWN (MOCC00385)

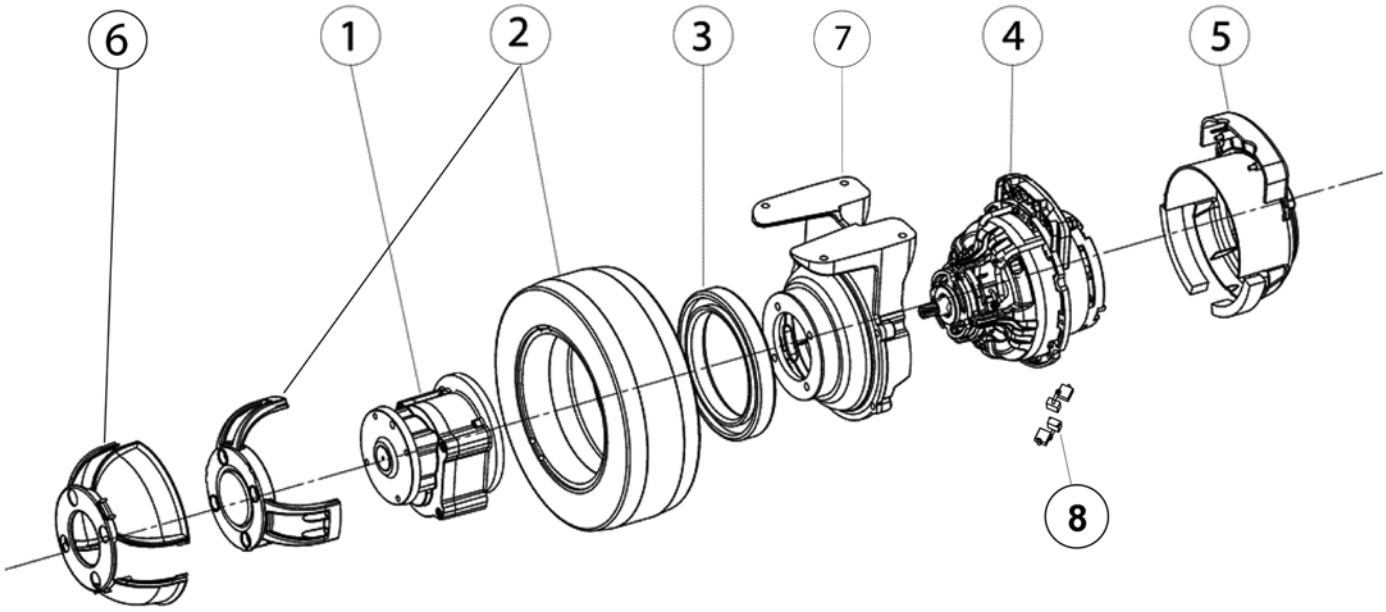

DRIVE WHEEL BREAKDOWN (MOCC00385)

	Ref.	Part No.	Mfr. Date	Description	Qty.
∇		MOCC00385	( )	Wheel Assy, Drive, Ele, 36vdc 37a 1100w	1
▲	1	RDGR00039	( )	Gearbox, Drive	1
▲	2	RTRT00442	( )	Tire, 300x100	1
▲	3	CUVR00194	( )	Bearing, Ball, 130b, 180d, 24w	1
▲	4	MOCC00407	( )	Motor, Ele, Drive	1
▲	5	MPVR04999	( )	Cover, Top, Drive	1
▲	6	MPVR08044	( )	Cover, Bottom, Drive	1
▲	7	MFVR00331	( )	Support, Motor	1
▲	8	MEVR34439	( )	Brush Kit, Motor	4

∇ ASSEMBLY

▲ INCLUDED IN ASSEMBLY

STEERING COLUMN GROUP (105CM Disk Model)

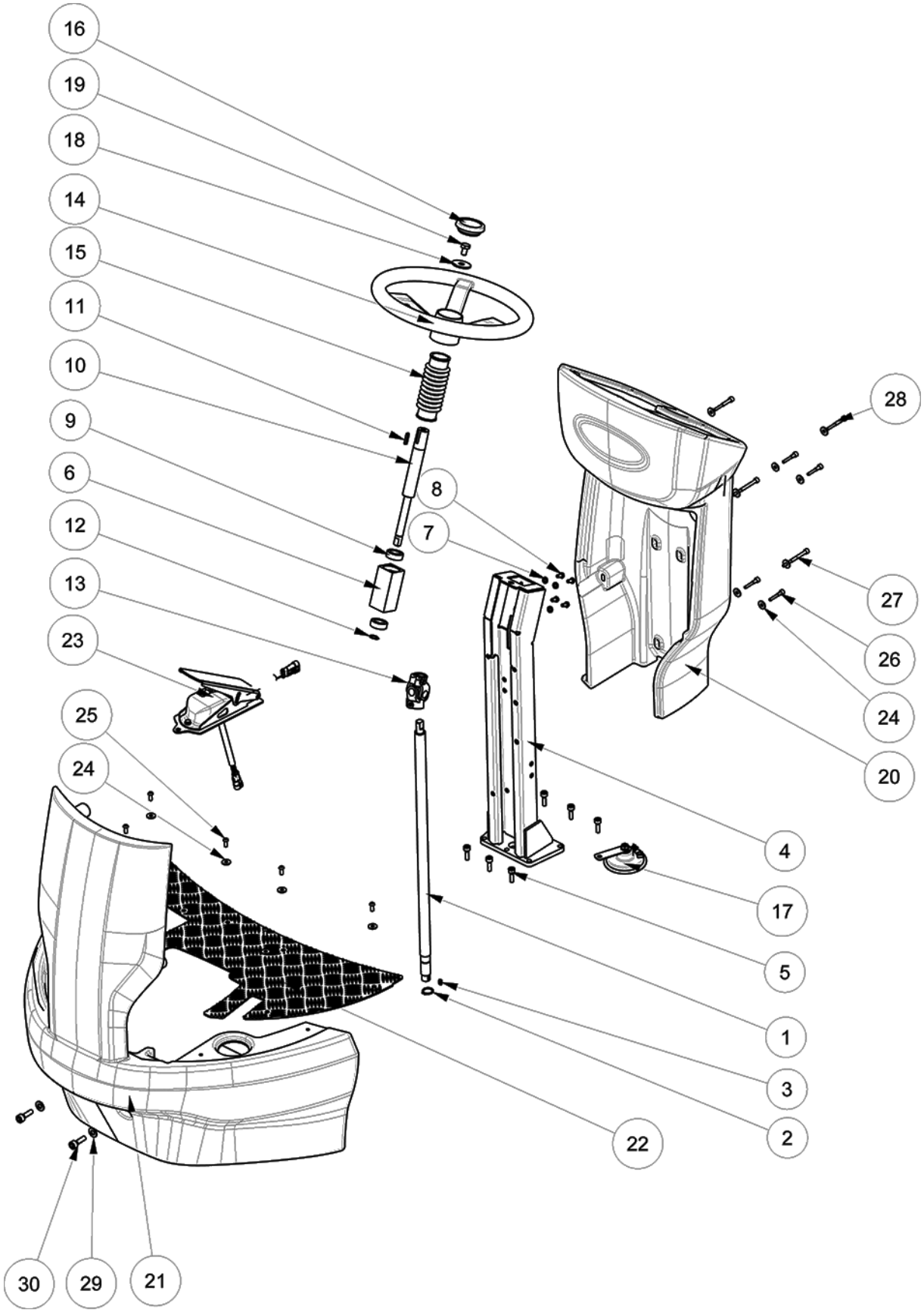

STEERING COLUMN GROUP (105CM Disk Model)

Ref.	Part No.	Mfr. Date	Description	Qty.
1	LAFN08820	( )	Shaft, Steering	1
2	897280	( )	Ring, Retaining, Ext, 20d, Uni7435	1
3	VTVR00229	( )	Key, 5 X 5, 12l	1
4	LAFN05787	( )	Channel Wldt, Steering	1
5	VTVT00639	( )	Screw, Soc, M8x25	6
6	LAFN04133	( )	Housing, Brg, Steering	1
7	897106	( )	Washer, Flat, 11d 6b 1.6, Ss, Uni6592	8
8	897130	( )	Screw, Hex, M6x12, Uni5739	4
9	CUVR17004	( )	Bearing, Ball, 15b, 35d, 11w, 6202- 2rs1	2
10	LAFN04076	( )	Shaft, Steering, Upper	1
11	VTVR33667	( )	Key, 5 X 5, 25l, Rnd, Uni6604a	1
12	VTAE17003	( )	Ring, Retaining, Ext, 15d, Din471	1
13	897397	( )	Joint, U	1
14	MPVR01517	( )	Wheel, Steering	1
15	897408	( )	Bellows, Shaft, Steering	1
16	MPVR47026	( )	Cap, Wheel, Steering	1
17	MEVR04383	( )	Horn, 36vdc	1
18	897401	( )	Washer, M10x40x2.5, Uni6593	1
19	VTVT47025	( )	Screw, Btn, M10x16, Iso7380	1
20	MPVR13191	( )	Shroud, Rear, Steering	1
21	MPVR13430	( )	Shroud, Front, Steering	1
22	LAFN11896	( )	Plate, Tread, Non- Skid	1
23	PMVR02056	( )	Pedal Assy, Accelerator	1
24	897112	( )	Washer, Flat, 18d 6b 1.6, Uni6593	15
25	897446	( )	Screw, M6x16	7
26	VTVT00729	( )	Screw, M6x35	4
27	VTVT00298	( )	Screw, M6x70, Uni5931	2
28	VTVT00261	( )	Screw, M6x50, Uni5931	2
29	897432	( )	Washer, 10b, 21d, Ss, Uni6592	2
30	897413	( )	Screw, Soc, M10x30	2

STEERING COLUMN GROUP (100CM Cylindrical Brush Model)

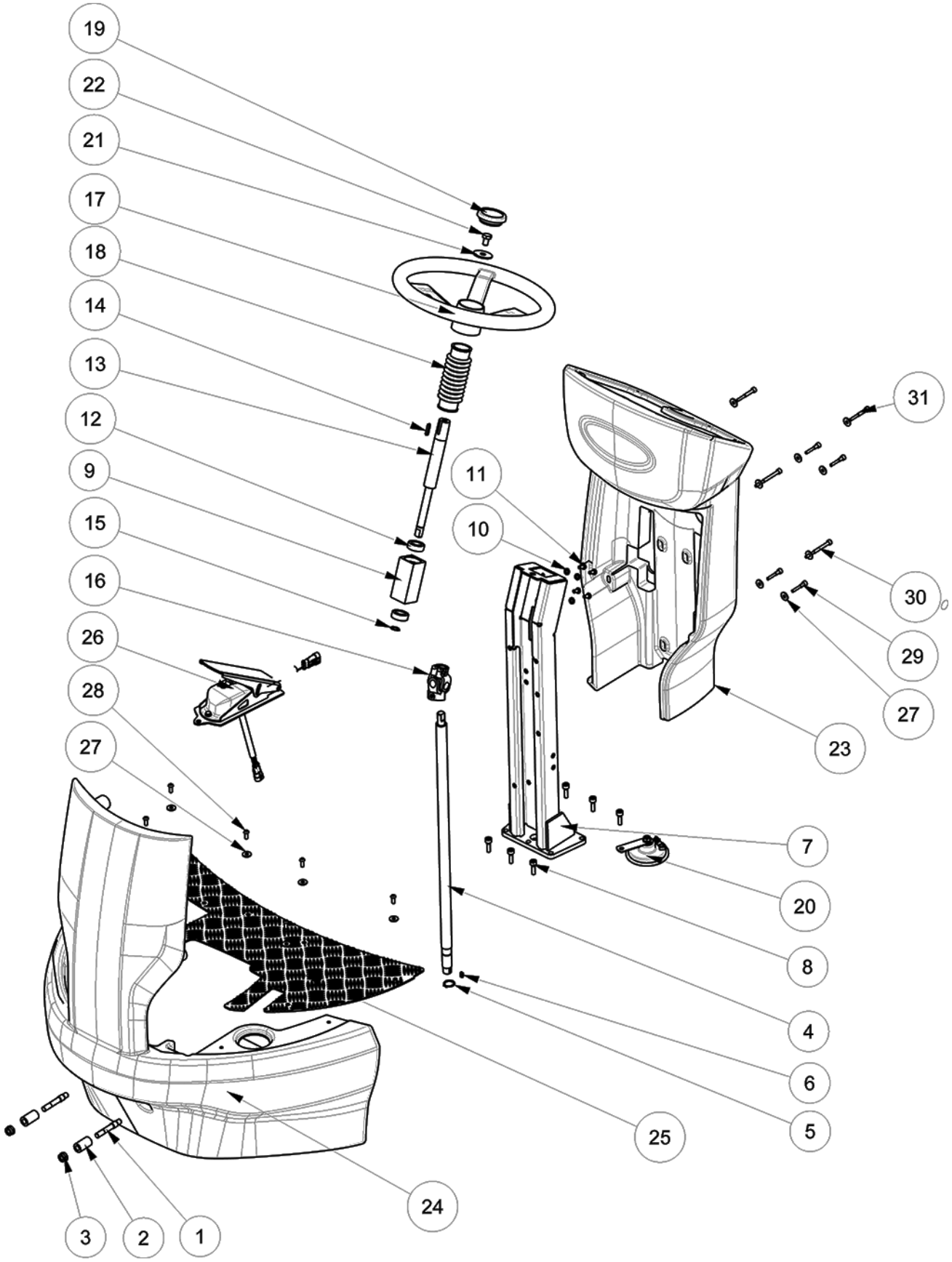

STEERING COLUMN GROUP (100CM Cylindrical Brush Model)

Ref.	Part No.	Mfr. Date	Description	Qty.
1	LAFN11919	( )	Pin, Thrd, M10 72l	2
2	MPVR05631	( )	Spacer, 10.5b 20d 35l, Pvc	2
3	897431	( )	Nut, Hex, Lock, M10, Ss, Din985	2
4	LAFN08820	( )	Shaft, Steering	1
5	897280	( )	Ring, Retaining, Ext, 20d, Uni7435	1
6	VTVR00229	( )	Key, 5 X 5, 12l	1
7	LAFN05787	( )	Channel Wldt, Steering	1
8	VTVT00639	( )	Screw, Soc, M8x25	6
9	LAFN04133	( )	Housing, Brg, Steering	1
10	897106	( )	Washer, Flat, 11d 6b 1.6, Ss, Uni6592	8
11	897130	( )	Screw, Hex, M6x12, Uni5739	4
12	CUVR17004	( )	Bearing, Ball, 15b, 35d, 11w, 6202- 2rs1	2
13	LAFN04076	( )	Shaft, Steering, Upper	1
14	VTVR33667	( )	Key, 5 X 5, 25l, Rnd, Uni6604a	1
15	VTAE17003	( )	Ring, Retaining, Ext, 15d, Din471	1
16	897397	( )	Joint, U	1
17	MPVR01517	( )	Wheel, Steering	1
18	897408	( )	Bellows, Shaft, Steering	1
19	MPVR47026	( )	Cap, Wheel, Steering	1
20	MEVR04383	( )	Horn, 36vdc	1
21	897401	( )	Washer, M10x40x2.5, Uni6593	1
22	VTVT47025	( )	Screw, Btn, M10x16, Iso7380	1
23	MPVR13220	( )	Shroud, Rear, Steering	1
24	MPVR13430	( )	Shroud, Front, Steering	1
25	LAFN11896	( )	Plate, Tread, Non- Skid	1
26	PMVR02056	( )	Pedal Assy, Accelerator	1
27	897112	( )	Washer, Flat, 18d 6b 1.6, Uni6593	15
28	897446	( )	Screw, M6x16	7
29	VTVT00729	( )	Screw, M6x35	4
30	VTVT00298	( )	Screw, M6x70, Uni5931	2
31	VTVT00261	( )	Screw, M6x50, Uni5931	2

ACCELERATOR PEDAL BREAKDOWN (MPVR02056)

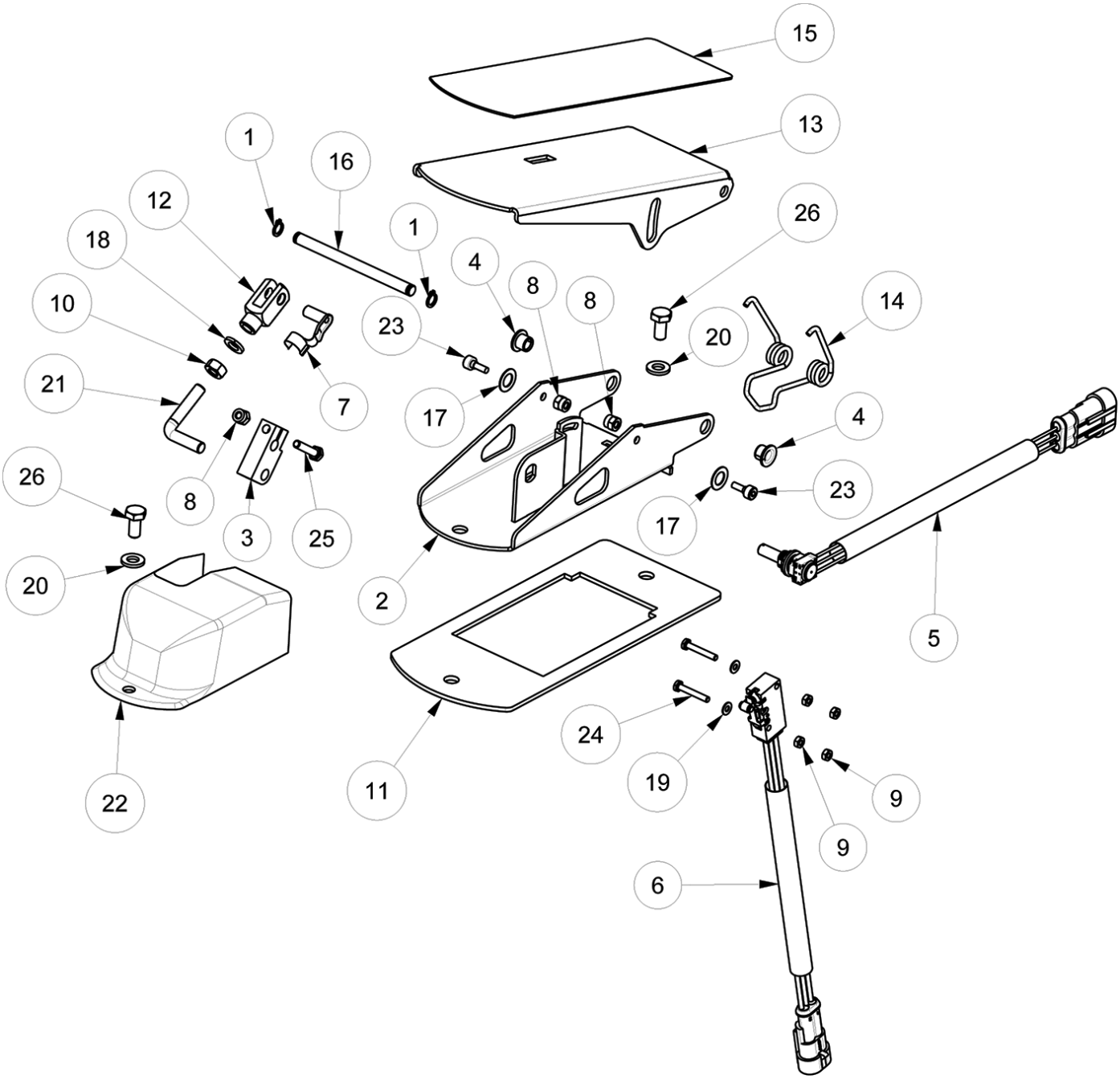

ACCELERATOR PEDAL BREAKDOWN (MPVR02056)

Ref.	Part No.	Mfr. Date	Description	Qty.
1	VTAE48552	( )	Ring, Retaining, Ext, 6d, Uni7435	2
2	LAFN07532	( )	Bracket Wldt, Pedal, Accelerator	1
3	LAFN01149	( )	Block, Pedal	1
4	CUVR00183	( )	Bushing	2
5	MECB01227	( )	Potentiometer, 5k	1
6	MECB01228	( )	Switch, Micro	1
7	CMCV75717	( )	Clip, M6, Uni1676	1
8	VTDD04369	( )	Nut, Hex, M4, Uni7473	3
9	897189	( )	Nut, M3, Ss	4
10	VTDD00482	( )	Nut, Hex, M6, Uni5588	1
11	LAFN05802	( )	Bracket, Pedal, Accelerator	1
12	CMCV76639	( )	Clevis, M6, Uni1676	1
13	LAFN06474	( )	Plate, Pedal, Accelerator	1
14	MLML00034	( )	Spring, Tors	1
15	MPVR00866	( )	Tread, Non- Skid, Pedal	1
16	LAFN00524	( )	Pin, 6d 82l	1
17	MPVR05528	( )	Washer	2
18	897129	( )	Washer, M6, Ss, Uni1751	1
19	VTRS00385	( )	Washer, 7d 3.2b 0.5, Ss, Uni6592	2
20	VTRS00503	( )	Washer, 6d, Uni6592	2
21	LAFN00909	( )	Rod, Thrd, M6	1
22	MPVR00302	( )	Cover, Pedal, Accelerator	1
23	VTVT00089	( )	Screw, Soc, M4x10, Uni5931	2
24	VTVT01350	( )	Screw, M3x20, Ss	2
25	VTVT00727	( )	Screw, Hex, M4x20	1
26	897130	( )	Screw, Hex, M6x12, Uni5739	2

CONTROL PANEL GROUP

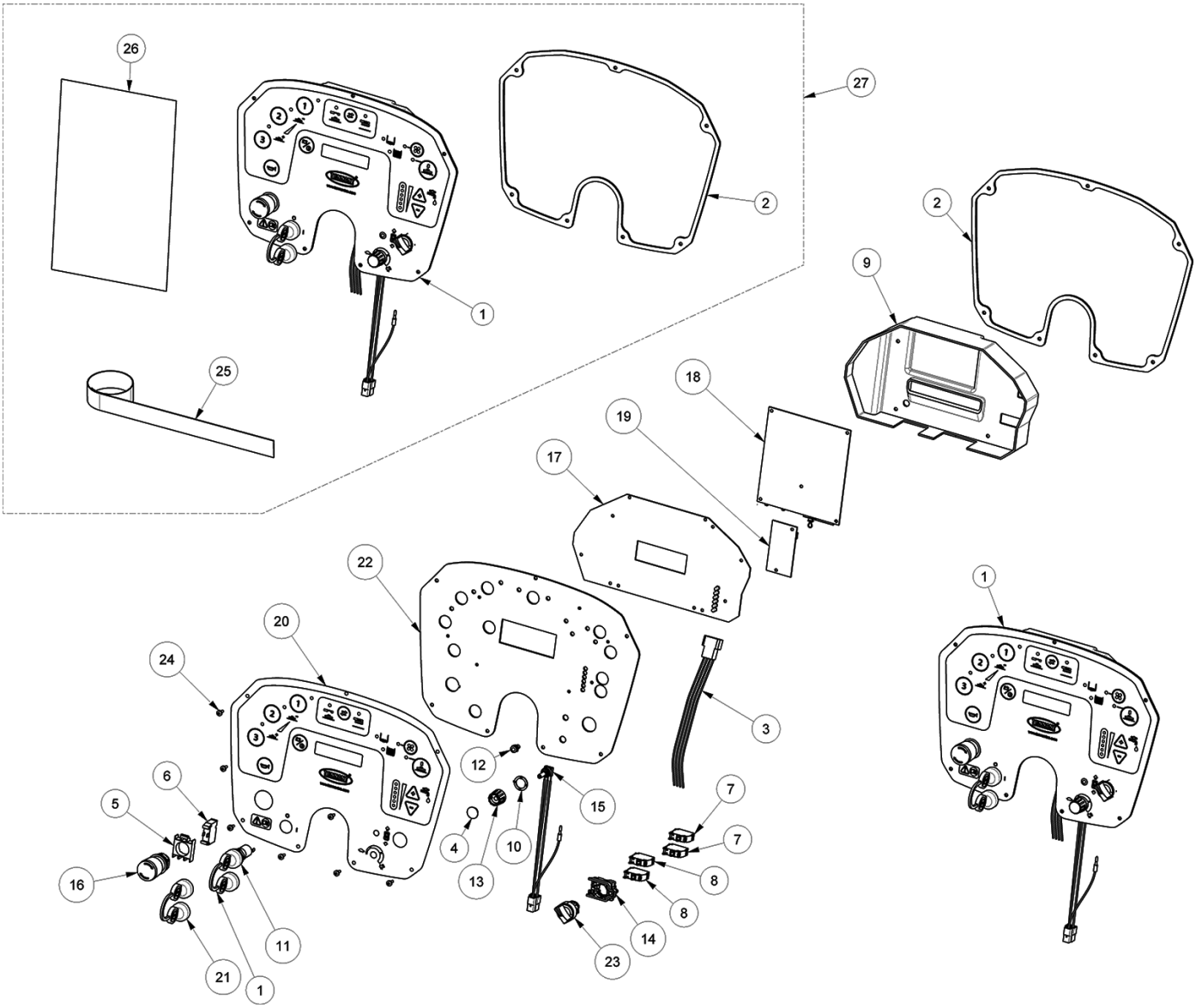

CONTROL PANEL GROUP

Ref.	Part No.	Mfr. Date	Description	Qty.
1	MECE00898	( )	Panel Assy, Membrane	1
2	GUGO00702	( )	Gasket, Panel, Control	1
3	MECB02035	( )	Harness, Panel, Control	1
4	MEVR01575	( )	Cap, Knob	1
5	MECI00583	( )	Mount, Switch	1
6	MECI00584	( )	Connector	1
7	MEVR02012	( )	Connector	2
8	MEVR02039	( )	Connector	2
9	MPVR05840	( )	Cover, Circuitboard, Display	1
10	MEVR01574	( )	Nut, Ring	1
11	MECI00723	( )	Switch, Key	1
12	MECB01250	( )	Light, Led	1
13	MEVR01573	( )	Knob	1
14	MEVR02038	( )	Mount, Switch	1
15	KTRI05576	( )	Potentiometer, 100k	1
16	MECI00582	( )	Switch, Safety, Shutoff	1
17	KTRI06415	( )	Kit, Display Board	1
18	KTRI06416*	( )	Kit, Board, Logic	1
19	KTRI06417*	( )	Kit, Board Interface	1
20	N/A	( )		1
21	MEVR02703	( )	Key, Ignition	1
22	LAFN11719	( )	Panel, Cntrl	1
23	MEVR02011	( )	Switch, Selector	1
24	897180	( )	Screw, M4x10, Ss	7
25	MEVR02709	( )	Strap, Ground	1
26	PLDC04564	( )	Manual, Instr	1
27	KTRI06405*	( )	Panel Kit, Cntrl	1

*** Requires Tennant *True* service or an authorized Tennant service provider.**

ELECTRICAL COMPONENT AND HARNESS GROUP

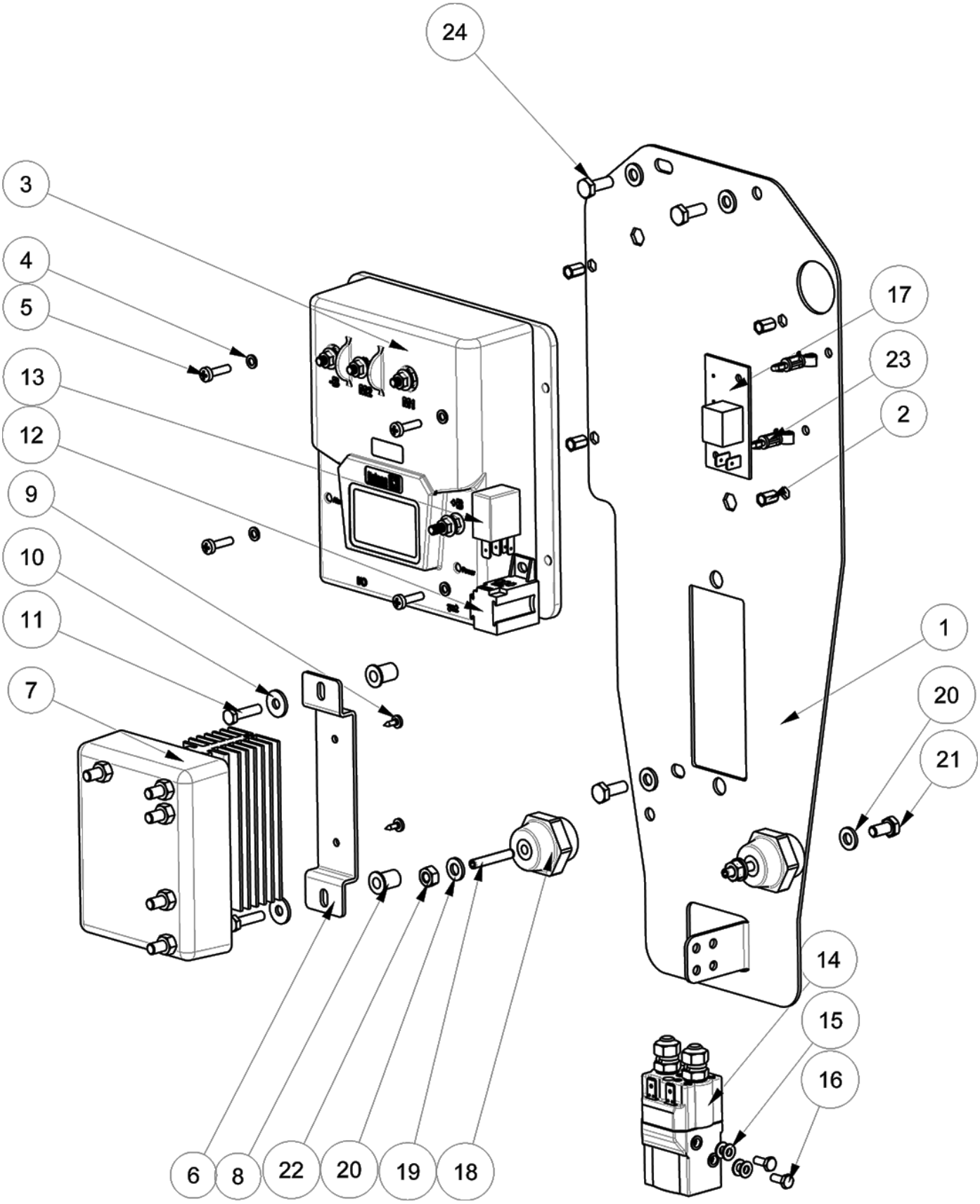

ELECTRICAL COMPONENT AND HARNESS GROUP

Ref.	Part No.	Mfr. Date	Description	Qty.
1	LAFN11890	( )	Plate, Mtg, Ele	1
2	VTVR00306	( )	Insert, M5	4
3	MECE00927	( )	Controller, 150a, 24- 36v	1
4	897204	( )	Washer, 4d, Uni1751	4
5	897359	( )	Screw, M4x16, Ss, Uni7687	4
6	LAFN11849	( )	Bracket, Controller	1
7	MECE00949	( )	Kit, Controller, 80A, 24V- 36V [T981]	1
8	MPVR13464	( )	Bushing, Flng	2
9	VTVT00040	( )	Screw	2
10	897384	( )	Washer, 5b, 14d, Ss	2
11	897170	( )	Screw, Hex, M5x20	2
12	MEVR02888	( )	Receptacle, Relay, Tev23333- Z1001- B045	1
13	MECE00456	( )	Relay	1
14	METT00086	( )	Contactor, 100a	1
15	897156	( )	Washer, 4d, Ss	4
16	897151	( )	Screw, Hex, M4x10, Ss	2
17	MECE00755	( )	Circuitboard, Horn	1
18	MEVR47082	( )	Isolator, M6	2
19	VTVT00900	( )	Screw, Set, Soc, M6x30	2
20	897106	( )	Washer, Flat, 11d 6b 1.6, Ss, Uni6592	7
21	897130	( )	Screw, Hex, M6x12, Uni5739	2
22	897405	( )	Nut, M6, Ss, Uni5588	2
23	MEVR01708	( )	Stand- Off	2
24	897128	( )	Screw, Hex, M8x40, Uni5739	3

SCRUB HEAD LIFT AND BUMPER GROUP (105cm Disk Model)

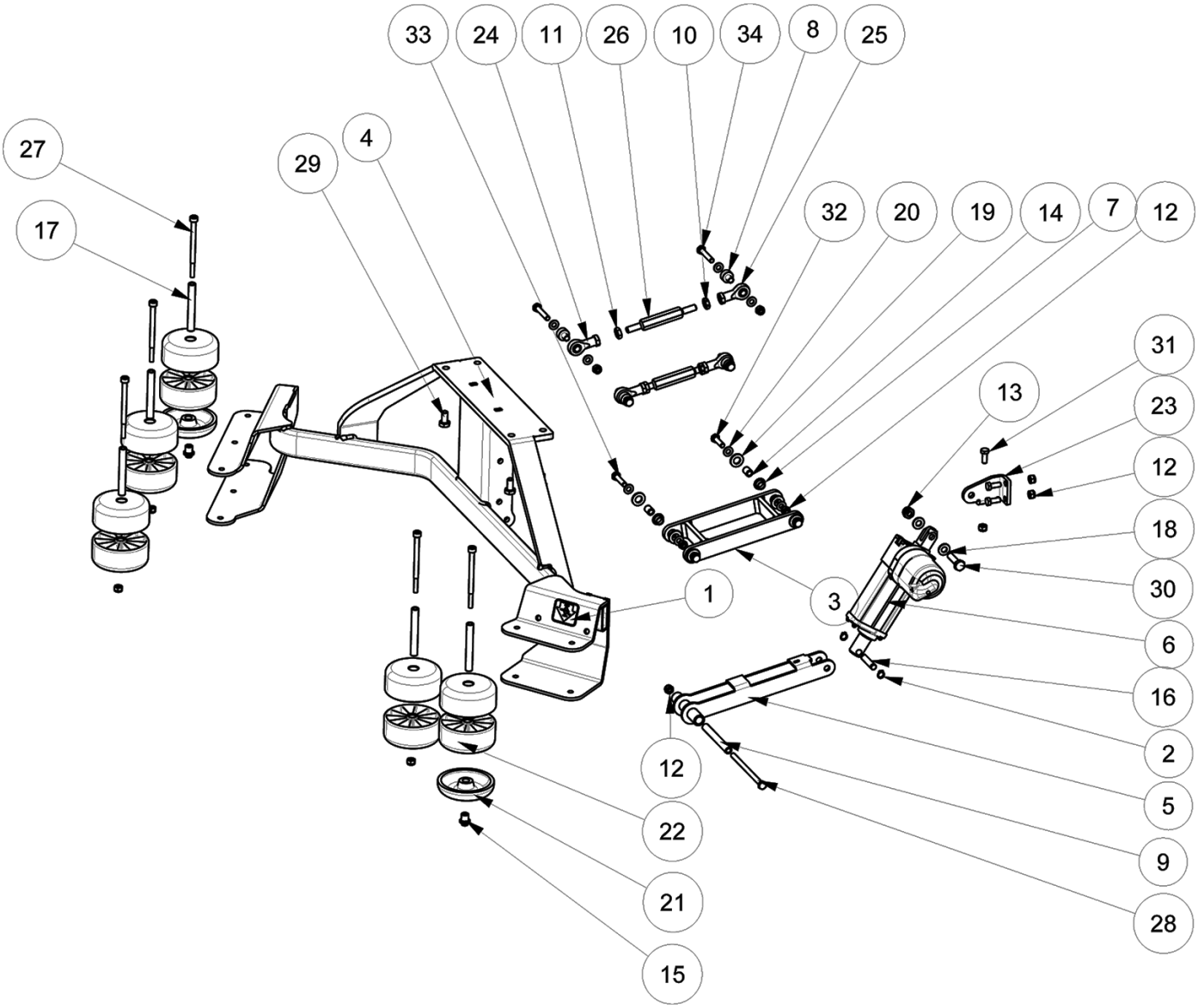

SCRUB HEAD LIFT AND BUMPER GROUP (105cm Disk Model)

Ref.	Part No.	Mfr. Date	Description	Qty.
1	N/A	( )	Label (Order Label Kit KTRI06603)	2
2	VTAE87276	( )	Seeger Ext. D10 Din471	2
3	LAFN07958	( )	Bracket, Actuator, Brush Head	1
4	LAFN11918	( )	Head	1
5	LAFN08802	( )	Arm	1
6	MOCC00388	( )	Actuator Brush Head 36v 1500n	1
7	CUVR00130	( )	Bearing, Crawling	4
8	LAFN09356	( )	Bushing	4
9	LAFN07878	( )	Bushing	1
10	VTDD00211	( )	Nut Uni 5589 M16 Thread Left	2
11	VTDD00151	( )	Nut M,10	2
12	VTDD01701	( )	Nut M8 Inox+Zin.	15
13	897431	( )	Nut Autobl.M10 Inox Din 985	1
14	897526	( )	Bushing, Sleeve, 8b 12d 15l	4
15	LAFN09007	( )	Pin	2
16	LAFN51065	( )	Pin, Brush, Actuator	1
17	LAFN04127	( )	Pin, Roller, Bumper	5
18	897432	( )	Washer, D. 10x21, Uni6592, Inox	2
19	897215	( )	Washer, D.12x24, Uni6592, Inox	8
20	897152	( )	Washer, D.8, Uni6592, Inox	16
21	897101	( )	Wheel, Bmpr, 98,5d X 21,5w	2
22	RTRT00510	( )	Wheel Bumper Ral7040	10
23	LAFN11874	( )	Bracket	1
24	VTVR00570	( )	Rod, Tie, End	2
25	VTVR00571	( )	Rod, Tie, End	2
26	LAFN09355	( )	Tie, Rod	2
27	VTVT67560	( )	Screw Tcei M8x110 Inox Aisi 304	5
28	VTVT01159	( )	Screw	1
29	VTVT13936	( )	Screw, M10x20	4
30	VTVT01549	( )	Screw Te M10- 40	1
31	897316	( )	Screw, Te, M8x20, Uni5739, Inox	3
32	897246	( )	Screw, Te, M8x30, Uni5739, Inox	2
33	897243	( )	Screw Te M8x35 Uni5739 Inox	2
34	897244	( )	Screw, Te, M8x45, Inox, A2	4

SCRUB HEAD LIFT AND BUMPER GROUP (100cm Cylindrical Brush Model)

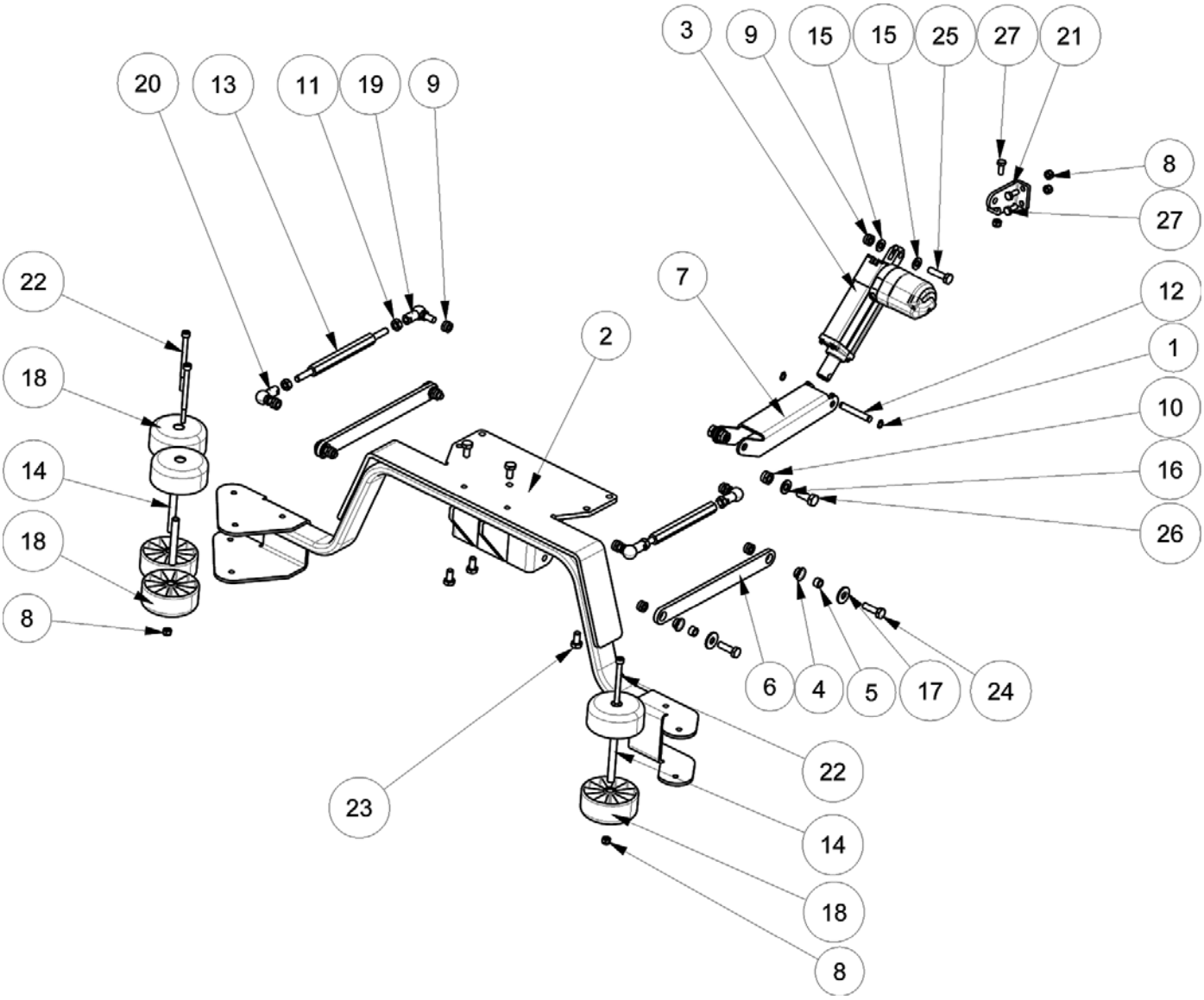

SCRUB HEAD LIFT AND BUMPER GROUP (100cm Cylindrical Brush Model)

Ref.	Part No.	Mfr. Date	Description	Qty.
1	VTAE87276	( )	Seeger Ext. D10 Din471	2
2	LAFN08096	( )	Bracket	1
3	MOCC00388	( )	Actuator Brush Head 36v 1500n	1
4	CUVR00192	( )	Brush Block Ring	4
5	LAFN09249	( )	Bushing	4
6	LAFN08102	( )	Arm	2
7	LAFN09208	( )	Bracket, Roller	1
8	VTDD01701	( )	Nut M8 Inox+Zin.	6
9	897431	( )	Nut Autobl.M10 Inox Din 985	9
10	897241	( )	Nut, M.12, Inox, A2	2
11	VTDD15522	( )	Nut M10 Inox Uni5588	4
12	LAFN08092	( )	Pin	1
13	LAFN09238	( )	Pin	2
14	LAFN04127	( )	Pin, Roller, Bumper	3
15	897432	( )	Washer, D. 10x21, Uni6592, Inox	2
16	897215	( )	Washer, D.12x24, Uni6592, Inox	2
17	897391	( )	Washer D.10	4
18	RTRT00510	( )	Wheel Bumper Ral7040	6
19	VTVR00133	( )	Joint, Right	2
20	VTVR00118	( )	Joint, Left	2
21	LAFN11939	( )	Bracket	1
22	VTVT67560	( )	Screw Tcei M8x110 Inox Aisi 304	3
23	VTVT13936	( )	Screw, M10x20	6
24	VTVT00715	( )	Screw Te M.10- 35	4
25	VTVT01549	( )	Screw Te M10- 40	1
26	VTVT00422	( )	Screw Te M 12x 30 Uni 5739	2
27	897316	( )	Screw, Te, M8x20, Uni5739, Inox	3

SCRUB HEAD GROUP (105cm Disk Model)

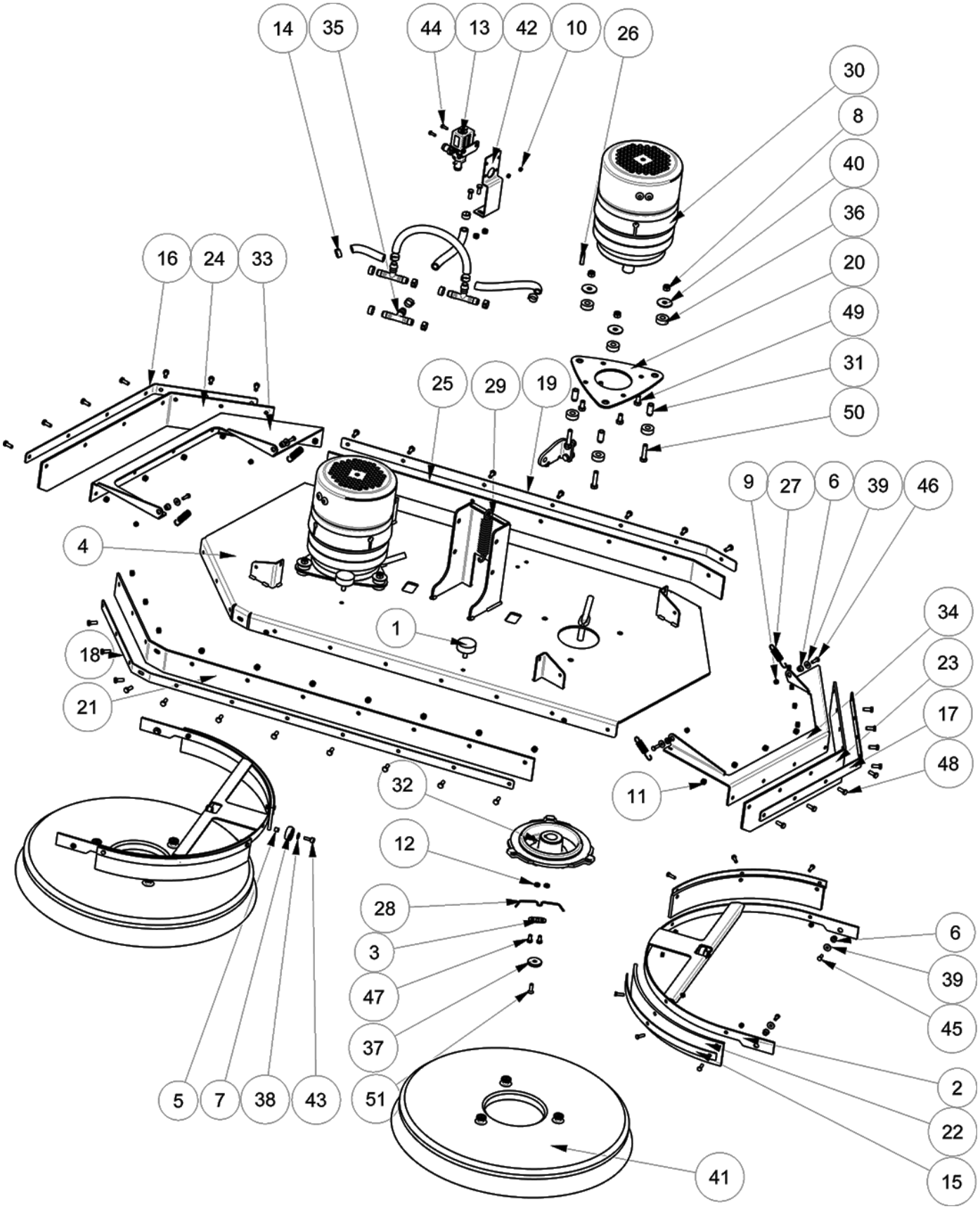

SCRUB HEAD GROUP (105cm Disk Model)

	Ref.	Part No.	Mfr. Date	Description	Qty.
	1	ABGO00026	( )	Vibration Damp	2
	2	LAFN06989	( )	Support	2
	3	LAFN05797	( )	Plate, Spring	2
	4	LAFN06988	( )	Support	1
	5	897231	( )	Bushing	2
	6	CUVR00140	( )	Bushing, Center Brush	8
	7	897524	( )	Bearing, Ball, 8b 30d 11w	2
	8	VTDD01701	( )	Nut M8 Inox+Zin.	9
	9	VTDD01693	( )	Nut M 5 Inx	16
	10	VTDD00147	( )	Nut M 4 Inx U.5588	2
	11	897105	( )	Nut, M6, Inox	35
	12	LAFN04140	( )	Spacer	4
	13	MEEV00043	( )	Valve, Solenoid	1
	14	FSVR00255	( )	Clamp, Head	12
	15	LAFN07002	( )	Bracket	4
	16	LAFN07006	( )	Bracket	1
	17	LAFN07005	( )	Bracket	1
	18	LAFN07004	( )	Bracket	1
	19	LAFN07003	( )	Bracket	1
	20	LAFN05785	( )	Flange Door Motor	2
	21	MPVR05036	( )	Flap	1
	22	MPVR05034	( )	Flap	4
	23	MPVR05037	( )	Flap (Left)	1
	24	MPVR05038	( )	Flap (Right)	1
	25	MPVR05035	( )	Flap (Rear)	1
	26	VTVR14052	( )	Key 8x 7x30 Uni 6604a	2
	27	MLML02801	( )	Spring Flap Later.	4
	28	MLML00240	( )	Spring, Retainer	2
	29	MLML00241	( )	Spring, Brush	1
∇	30	MOCC00195	( )	Motor	2
▲		MEVR05203	( )	Brush, Motor, Carbon	2
	31	LAFN04141	( )	Pin Plate Motor	6
	32	MFVR00139	( )	Disk, Drive, Aluminium	2
	33	LAFN07012	( )	Plane	1
	34	LAFN07013	( )	Plane	1
	35	897268	( )	Connector 3 Vie	3
	36	GUGO00264	( )	Washer	12
	37	LAFN04146	( )	Washer, Fixed, Dish	2
	38	897106	( )	Washer, Flat, 6,00x11,00x1,6, Ss	2
	39	897384	( )	Washer, M5x14, Inox	8

∇ ASSEMBLY
▲ INCLUDED IN ASSEMBLY

SCRUB HEAD GROUP (105cm Disk Model) - Contd

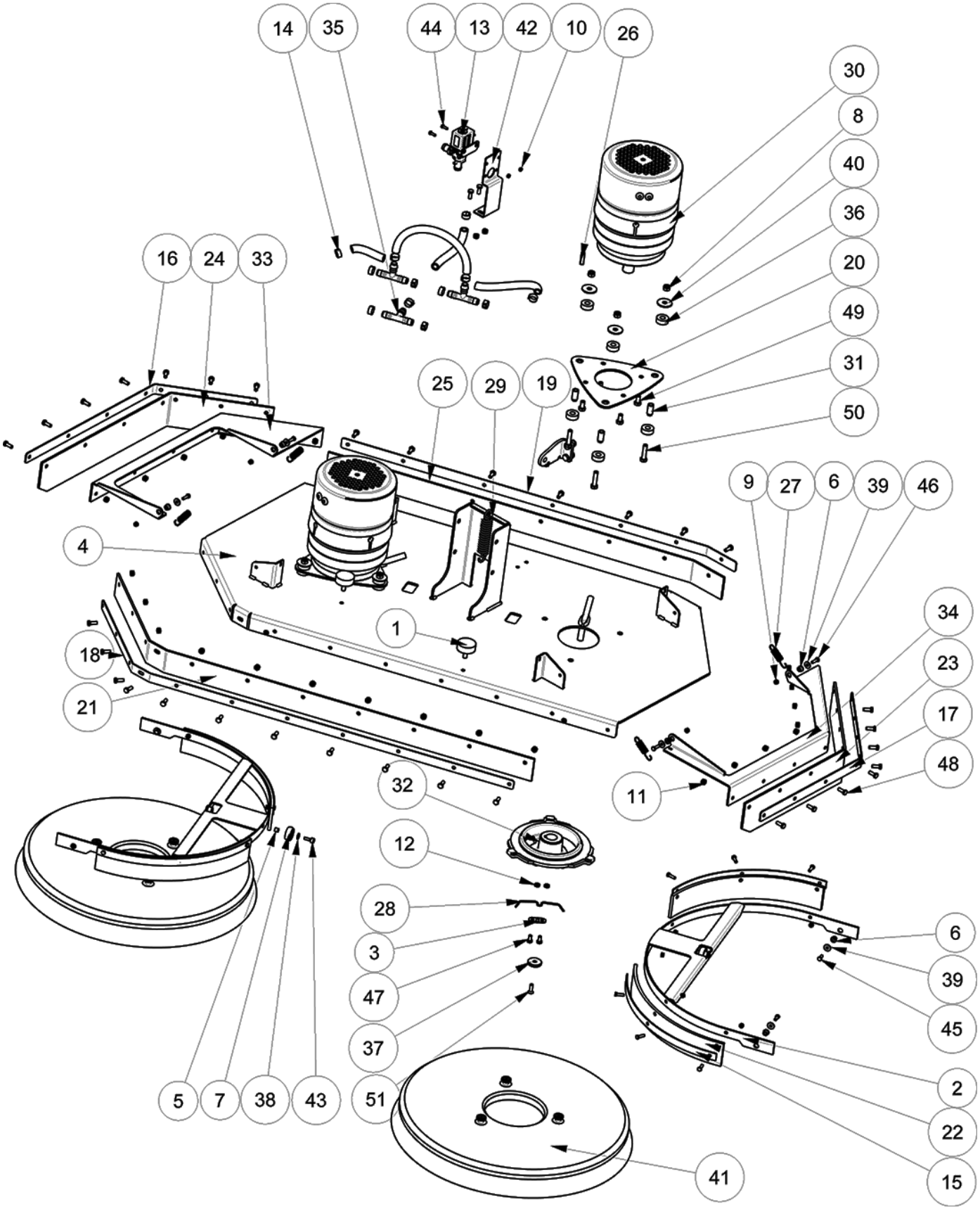

SCRUB HEAD GROUP (105cm Disk Model) - Contd

Ref.	Part No.	Mfr. Date	Description	Qty.
40	897375	( )	Washer, D. 8 X32, Uni6593, Inox	6
41	SPPV01546	( )	Brush, Ppl, Soft 53cm	2
42	LAFN05835	( )	Bracket, Solenoid Valve	1
43	897352	( )	Screw, Tcei, M.6x16	2
44	897453	( )	Screw, Te, M4x12, Uni5739, Inox	2
45	897459	( )	Screw, M5x12, Te, Inox	4
46	897145	( )	Screw, Te, M5x16, Uni5739, Inox	16
47	897130	( )	Screw, Te, M6x12, Uni5739, A2	4
48	897128	( )	Screw Te 6x16 Uni5739	35
49	897184	( )	Screw, Te, M8x16, Uni5739, A2	8
50	897243	( )	Screw Te M8x35 Uni5739 Inox	6
51	897277	( )	Screw, Tspei, M6x20, Uni5933	2

SCRUB HEAD GROUP (100cm Cylindrical Brush Model)

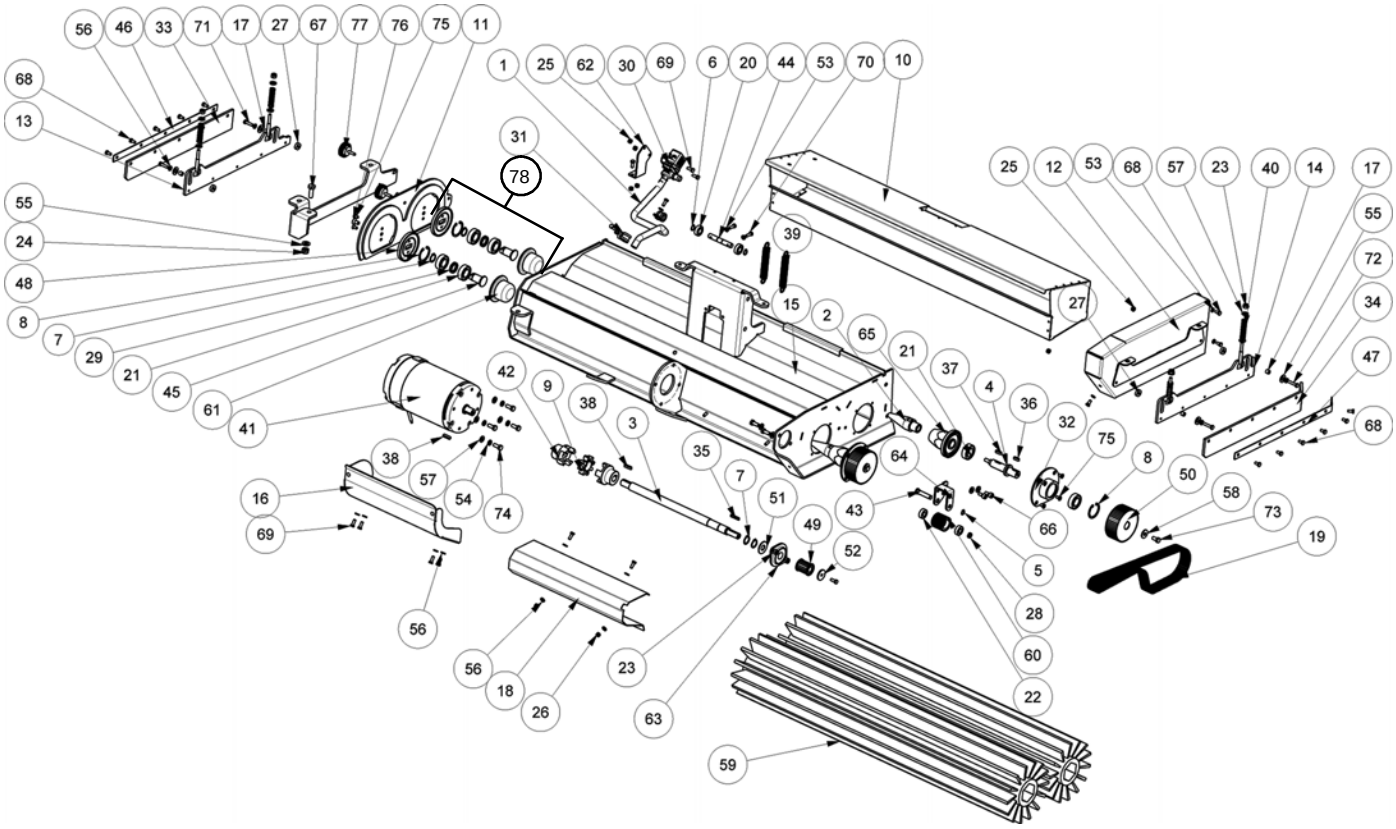

SCRUB HEAD GROUP (100cm Cylindrical Brush Model)

	Ref.	Part No.	Mfr. Date	Description	Qty.
	2	LAFN10125	( )	Shaft Brush Insertion	2
	3	ALTR00093	( )	Shaft	1
	4	ALTR00092	( )	Shaft	2
	5	VTAE87276	( )	Seeger Ext. D10 Din471	1
	6	VTAE14016	( )	Seeger External Din 471 D.12	2
	7	897280	( )	Circlip, D. 20, Uni7435	4
	8	VTAE14086	( )	Circlip D. 42 Uni 7437	4
	9	MPVR06304	( )	Ring	1
	10	LAFN08073	( )	Cover	1
	11	LAFN08097	( )	Plate, Head, Right	1
	12	LAFN08074	( )	Panel, Left	1
	13	LAFN08076	( )	Support, Right	1
	14	LAFN08075	( )	Support, Left	1
	15	LAFN08056	( )	Head	1
	16	LAFN08080	( )	Housing, Motor	1
	17	LAFN04184	( )	Bushing, Roll	4
	18	LAFN08081	( )	Cover, Drive Shaft	1
	19	MTCG00137	( )	Belt, Toothed, 950 Rpp5 M 32 Dd	1
	20	CUVR46942	( )	Bearing, Main Brush, Pulley	2
	21	CUVR19846	( )	Bearing 6004rs - Skf	8
	22	CUVR29964	( )	Bearing, Ball 6000- 2rs1	2
	23	VTDD01701	( )	Nut M8 Inox+Zin.	6
	24	897431	( )	Nut Autobl.M10 Inox Din 985	1
	25	897105	( )	Nut, M6, Inox	4
	26	897105	( )	Nut, M6, Inox	4
	27	LAFN06396	( )	Spacer, Flap, Left	4
	28	LAFN06846	( )	Spacer	1
	29	LAFN08088	( )	Spacer	2
	30	MEEV00043	( )	Valve, Solenoid	1
	31	897364	( )	Clamp, Stl, 16d, Insulated	2
	32	LAFN08057	( )	Flange	2
	33	MPVR06262	( )	Flap Dx Ct230 (Right)	1
	34	MPVR06263	( )	Flap Sx Ct230 (Left)	1
	35	VTVR13164	( )	Key Uni 6604 5x5x30	1
	36	VTVR00053	( )	Key Uni 6604 6x6x18	2
	37	VTVR28706	( )	Key 6x 6x20 Uni 6604a	2
	38	VTVR23472	( )	Key 6x6x25	2
	39	897235	( )	Spring D. 17.5 X110 N38	2
	40	MLML00302	( )	Spring, Recording Flap	4
∇	41	MOCC00421	( )	Motor, Brush	1
▲		MOCC00344	( )	Motor, Carbon Brushes	1
	42	ALTR00094	( )	Hub	2
	43	LAFN06847	( )	Pin, Belt Tensioner	1
	44	LAFN08082	( )	Pin	1
	45	LAFN08089	( )	Pin	2

∇ ASSEMBLY
▲ INCLUDED IN ASSEMBLY

SCRUB HEAD GROUP (100cm Cylindrical Brush Model) - Contd

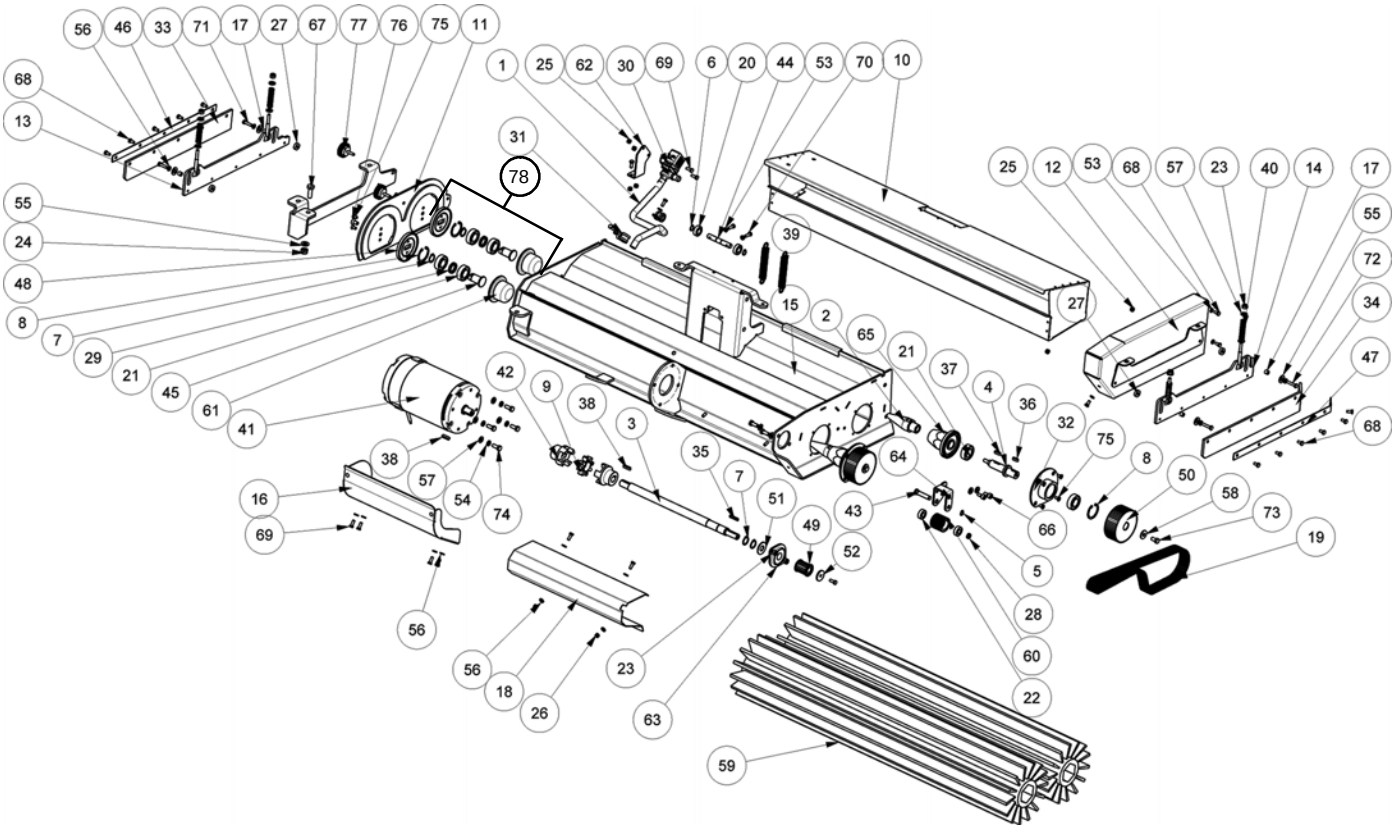

SCRUB HEAD GROUP (100cm Cylindrical Brush Model) - Contd

Ref.	Part No.	Mfr. Date	Description	Qty.
46	LAFN08077	( )	Support, Flap, Right	1
47	LAFN08079	( )	Bracket, Left	1
48	LAFN08086	( )	Cover	2
49	MTPL00154	( )	Pulley, Motor, Test	1
50	MTPL00210	( )	Pulley	2
51	LAFN36058	( )	Washer Inox Ä 15,3x35 Sp2	1
52	897576	( )	Washer, M30x6x3	1
53	897129	( )	Washer, D.6, Grw, Uni1751, Inox	5
54	897216	( )	Washer, D. 8, Grw, Uni1751, Inox	4
55	897432	( )	Washer, D. 10x21, Uni6592, Inox	5
56	897106	( )	Washer, Flat, 6,00x11,00x1,6, Ss	14
57	897152	( )	Washer, D.8, Uni6592, Inox	16
58	897120	( )	Washer, D.8x24, Uni6593, Inox	2
59	SPPV01330	( )	Brush, Soft, Ppl, 100cm [Std]	2
60	MTPL00193	( )	Roller	1
61	LAFN08087	( )	Roller - (Brush Drive)	2
62	LAFN08101	( )	Support, Ev	1
63	897283	( )	Support	1
64	LAFN06848	( )	Support, Belt Tensioner	1
65	LAFN08059	( )	Disk, Drive	2
66	897347	( )	Screw, Tcei, M.8x16	2
67	VTVT01541	( )	Screw Te, M10x30, Inox,Uni5739	1
68	897130	( )	Screw, Te, M6x12, Uni5739, A2	14
69	897128	( )	Screw Te 6x16 Uni5739	13
70	897287	( )	Screw, Te, M6x20, Uni5739, Inox	2
71	897532	( )	Screw, Te, M6x25, Uni5739, Inox	2
72	VTVT00433	( )	Screw, M6x30	2
73	897184	( )	Screw, Te, M8x16, Uni5739, A2	2
74	897316	( )	Screw, Te, M8x20, Uni5739, Inox	6
75	VTVT00678	( )	Screw	12
76	897394	( )	Screw, Tspei, M8x16	2
77	VTVT00125	( )	Handwheel D.40 M6x15	2
78	KTRI05006	( )	Kit, Driver Roll (Includes Items #4, 21, 32, 36, 37, 65 & 75)	2

SIDE BRUSH GROUP (100cm Cylindrical Brush Model)

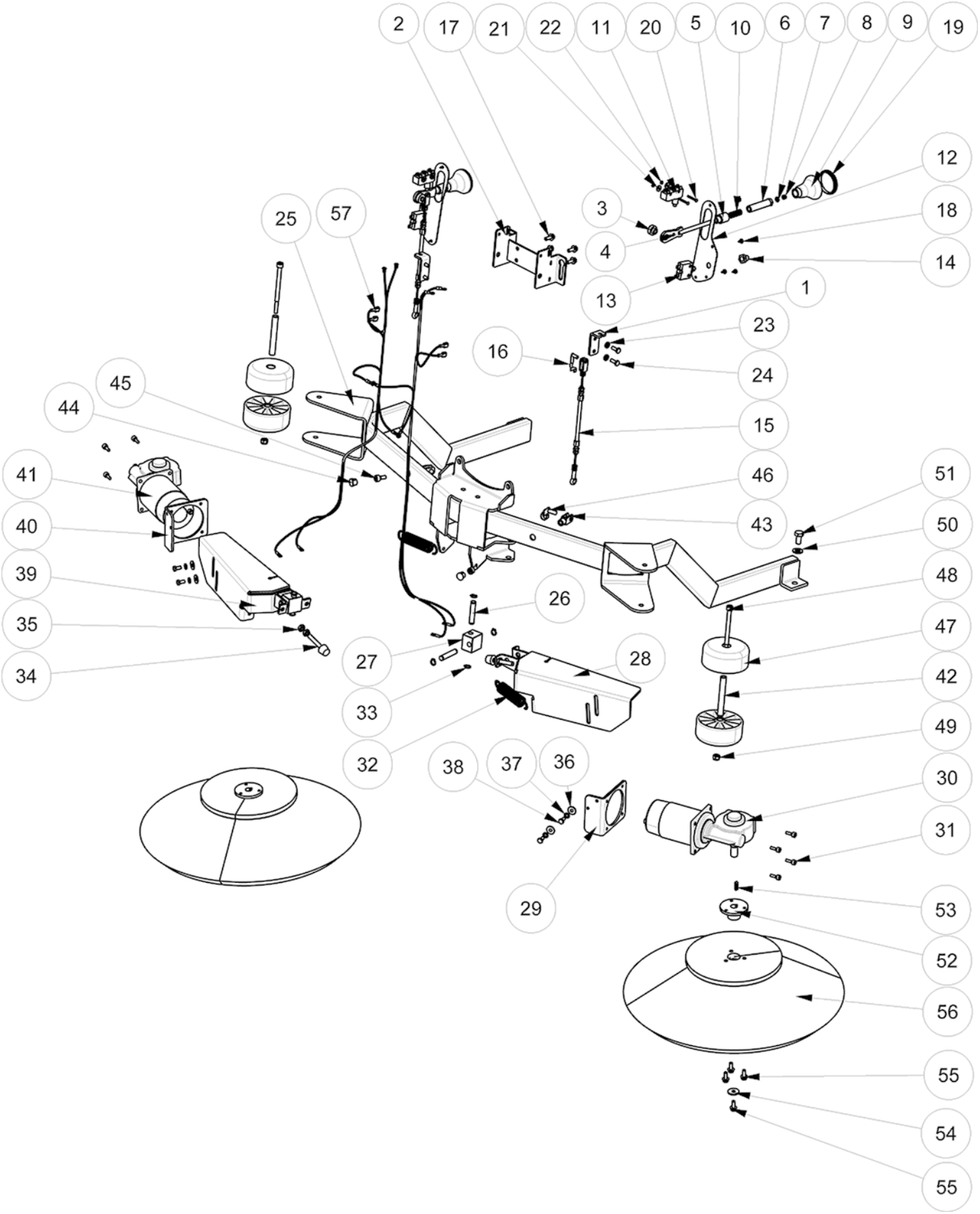

SIDE BRUSH GROUP (100cm Cylindrical Brush Model)

Ref.	Part No.	Mfr. Date	Description	Qty.
1	LAFN09211	( )	Bracket	2
2	LAFN07597	( )	Bracket	1
3	LAFN00153	( )	Bushing, Lever, Lift Brush	2
4	LAFN00803	( )	Arm, Brush, Lift	2
5	LAFN07612	( )	Bushing	2
6	LAFN00523	( )	Spring Holder Brush Lift	2
7	VTRS00502	( )	Washer D. 5 0.466 Uni 6592	2
8	VTDD08171	( )	Nut M 5 Tef	2
9	MPVR00868	( )	Knob, Lifting Brush	2
10	MLML00027	( )	Spring Brush Central Knob	2
11	MECI75801	( )	Microswitch	2
12	LAFN07599	( )	Cover	2
13	METT00040	( )	Fuse, Circuit Breaker, 5a	2
14	MEVR02900	( )	Cap Circuit Breaker	2
15	CMCV00458	( )	Cable	2
16	CMCV00009	( )	Clip Uni 1676	2
17	VTVT62920	( )	Screw Te F/Rond. M 6x 16 Zb	4
18	VTVT85145	( )	Screw Tcb T- Cross 4.2x9.5 Inox	8
19	MPVR00879	( )	Knob, Lifting Brush	2
20	VTVT00021	( )	Screw Te Uni 5739 3x25 Zb	4
21	VTRS15959	( )	Washer D. 4x12 Uni 6593	4
22	VTDD00001	( )	Nut, M3, Uni5588, Zb	4
23	897106	( )	Washer, Flat, 6,00x11,00x1,6, Ss	4
24	897128	( )	Screw Te 6x16 Uni5739	4
25	LAFN08098	( )	Bumper	1
26	LAFN01148	( )	Pin, Brush, Side	4
27	LAFN00154	( )	Arm, Block, Side Brush	2
28	LAFN08100	( )	Support, Motor	1
29	LAFN00809	( )	Plate, Side Brush	1
30	MOCC00367	( )	Motor (Left)	1
31	VTVT09913	( )	Screw Tcei 6x16 Uni5931	8
32	MLML45102	( )	Spring Tr	2
33	VTAE87276	( )	Seeger Ext. D10 Din471	8
34	ABGO00055	( )	Vibration, Damp	2
35	VTDD00057	( )	Nut Uni 5589 M8 Bass	4
36	897112	( )	Washer, Flat, 6,00x18,00x1,6	4
37	897129	( )	Washer, D.6, Grw, Uni1751, Inox	4
38	897130	( )	Screw, Te, M6x12, Uni5739, A2	4
39	LAFN08099	( )	Support, Motor	1
40	LAFN00808	( )	Plate, Side Brush	1

SIDE BRUSH GROUP (100cm Cylindrical Brush Model) - Contd

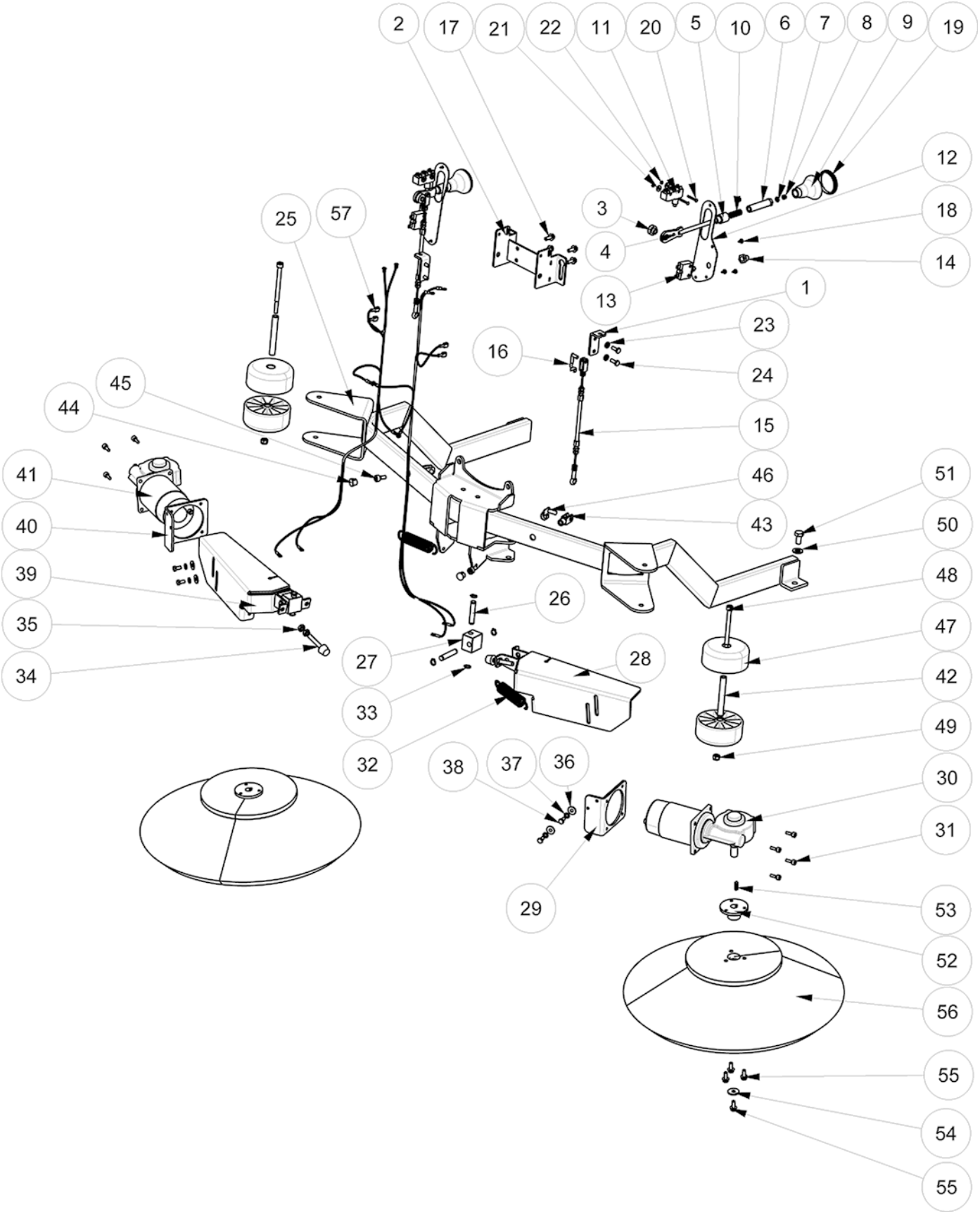

SIDE BRUSH GROUP (100cm Cylindrical Brush Model) - Contd

Ref.	Part No.	Mfr. Date	Description	Qty.
41	MOCC00366	( )	Motor (Right)	1
42	LAFN04127	( )	Pin, Roller, Bumper	2
43	CMCV00001	( )	Fork Uni 1676 M8x16	2
44	RCVR00165	( )	Cap, Plastic, 13mm	2
45	897347	( )	Screw, Tcei, M.8x16	2
46	CMCV75718	( )	Clip Uni 1676 M8	2
47	RTRT00510	( )	Wheel Bumper Ral7040	4
48	VTVT67560	( )	Screw Tcei M8x110 Inox Aisi 304	2
49	VTDD01701	( )	Nut M8 Inox+Zin.	2
50	897432	( )	Washer, D. 10x21, Uni6592, Inox	2
51	VTVT13936	( )	Screw, M10x20	2
52	LAFN45010	( )	Flange L.1400 Lt	2
53	VTVR13165	( )	Key Uni 6604 5x5x20	2
54	VTRS63242	( )	Washer D. 6 X24 Zc	2
55	VTVT62920	( )	Screw Te F/Rond. M 6x 16 Zb	8
56	SPPV00018	( )	Sibrush, Side, Ppl, Medium [Std]	2
57	MECB01268	( )	Brush, Side, Harness	1

SQUEEGEE LIFT BRACKET GROUP

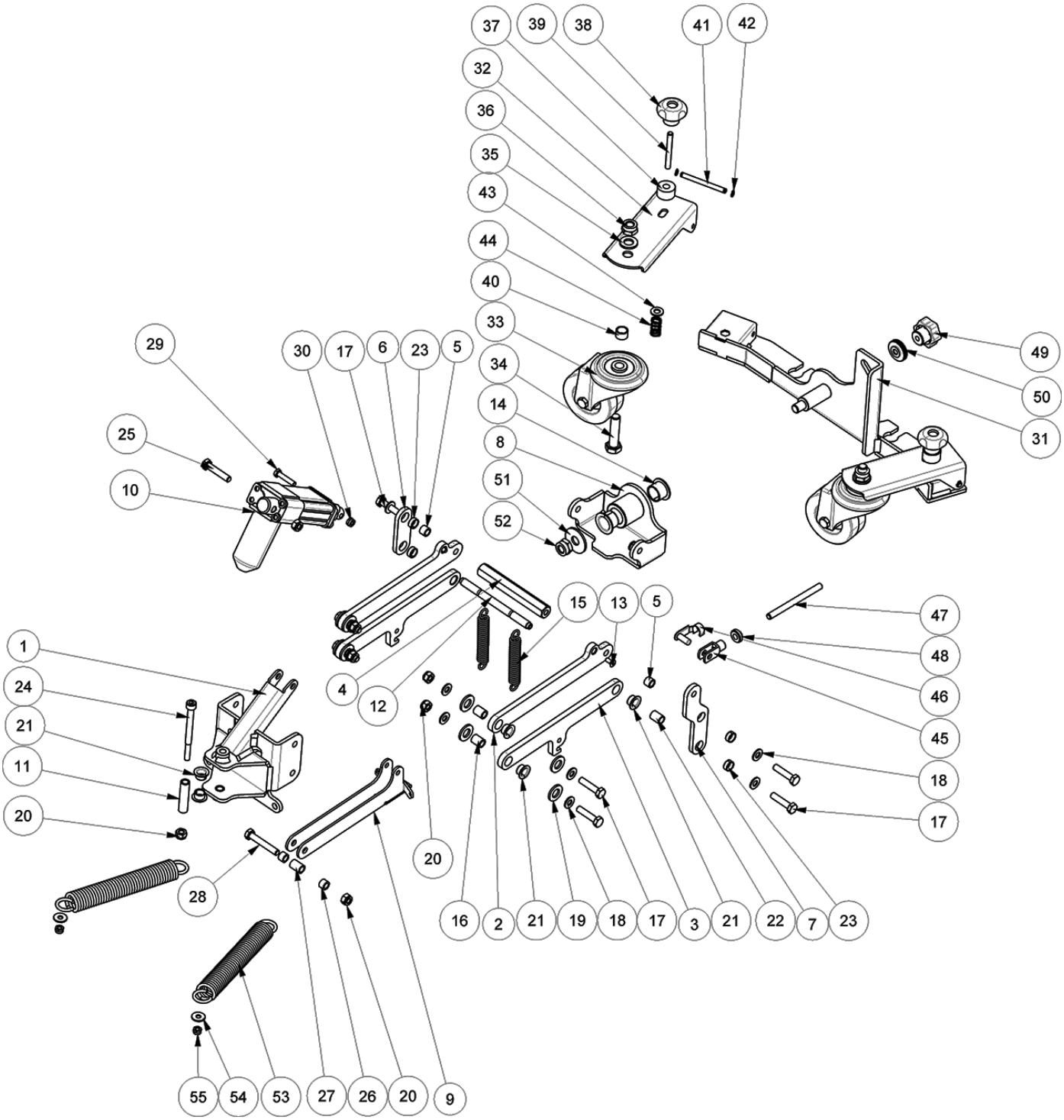

SQUEEGEE LIFT BRACKET GROUP

Ref.	Part No.	Mfr. Date	Description	Qty.
1	LAFN08809	( )	Lever	1
2	LAFN11223	( )	Arm	2
3	LAFN11737	( )	Arm, Squeegee	2
4	LAFN09239	( )	Spacer	1
5	897336	( )	Bushing D. 9x12x 8.3	2
6	LAFN11224	( )	Rod, Connecting	1
7	LAFN11225	( )	Rod, Connecting	1
8	LAFN08812	( )	Bracket	1
9	LAFN05777	( )	Lever, Lifting, Wiper	1
10	MOCC00394	( )	Actuator, Squeegee 36v	1
11	LAFN07879	( )	Bushing	1
12	LAFN08808	( )	Pin	1
13	897658	( )	Screw, M5x12, Tspei, Uni5933	2
14	CUVR44216	( )	Bushing Cb 85 2015 31t	2
15	MLML00022	( )	Spring Hook Harness	2
16	897526	( )	Bushing, Sleeve, 8b 12d 15l	4
17	897243	( )	Screw Te M8x35 Uni5739 Inox	8
18	897152	( )	Washer, D.8, Uni6592, Inox	14
19	897215	( )	Washer, D.12x24, Uni6592, Inox	8
20	VTDD01701	( )	Nut M8 Inox+Zin.	9
21	CUVR00130	( )	Bearing, Crawling	8
22	LAFN43369	( )	Spacer D. 9,12 L 16	2
23	LAFN11228	( )	Bushing	4
24	VTVT01701	( )	Bolt, Stud	1
25	897536	( )	Screw, Te, M.8x40	1
26	LAFN04157	( )	Bushing, Joint	2
27	LAFN04139	( )	Spacer, Joint, Wiper	1
28	897232	( )	Screw, Te, M8x50, Inox, A2	1
29	VTVT00433	( )	Screw, M6x30	1
30	897105	( )	Nut, M6, Inox	1
31	KTRI05322	( )	Kit CT230 HD	1
32	LAFN08993	( )	Arm, Holder, Wiper	2
33	RTRT00518	( )	Wheel Swivel	2
34	VTVT28885	( )	Screw Te M 12x 50 Uni 5739 Inox	2
35	897215	( )	Washer, D.12x24, Uni6592, Inox	2
36	897241	( )	Nut, M.12, Inox, A2	2
37	ABGO00042	( )	Dampener, Vibration	2
38	VTVR35378	( )	Knob F 8max20 D.40	2
39	VTVT01355	( )	Screw M8x60 Uni5923	2

SQUEEGEE LIFT BRACKET GROUP - Contd

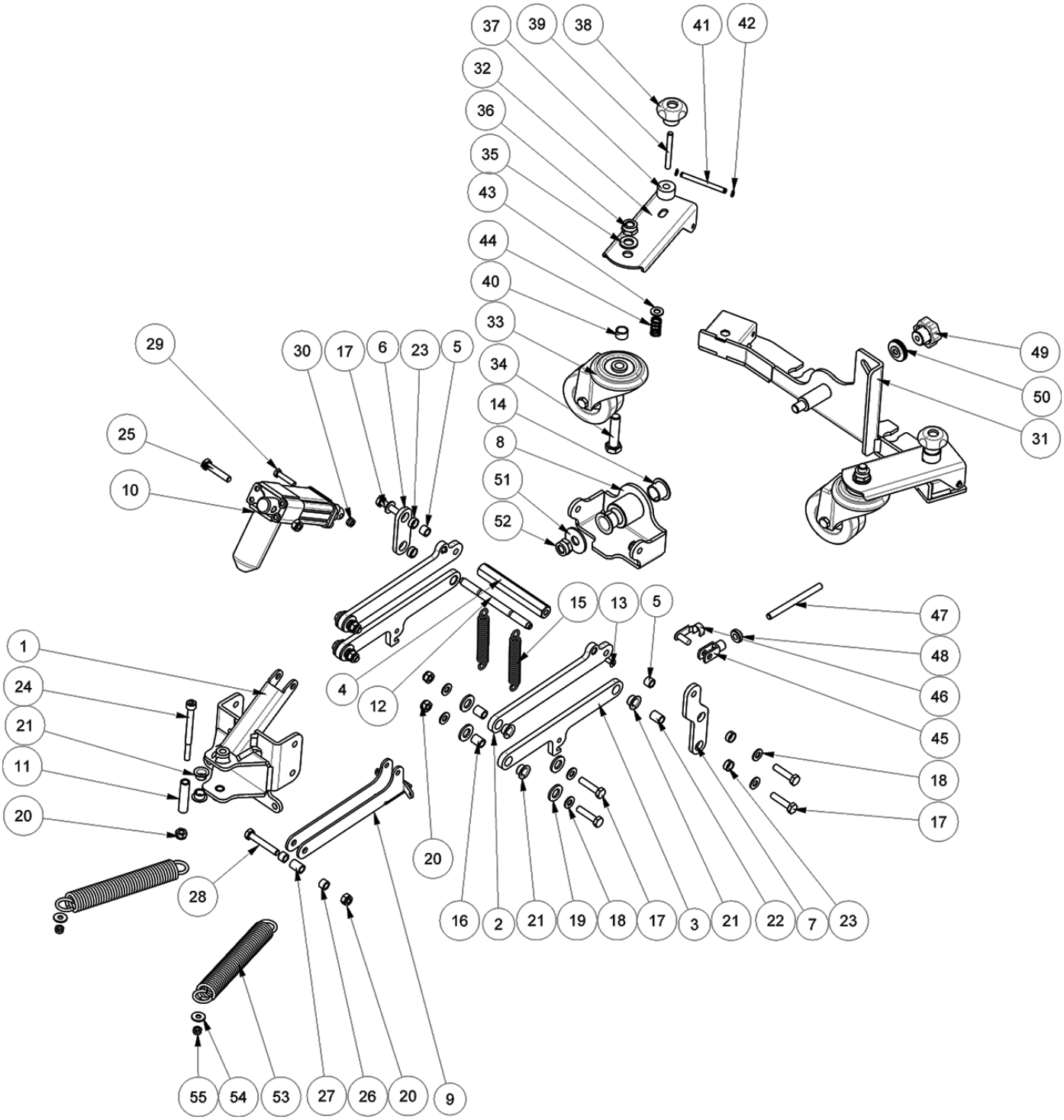

SQUEEGEE LIFT BRACKET GROUP - Contd

Ref.	Part No.	Mfr. Date	Description	Qty.
40	LAFN09002	( )	Ring	2
41	LAFN04150	( )	Pin, Wiper Wheel Arm	2
42	VTAE48552	( )	Clip External Din 471 D.6	4
43	897152	( )	Washer, D.8, Uni6592, Inox	2
44	MLML00239	( )	Spring For Wheel	2
45	CMCV00001	( )	Fork Uni 1676 M8x16	1
46	CMCV75718	( )	Clip Uni 1676 M8	1
47	CMCV00181	( )	Tie Rod M8x100	1
48	LAFN08811	( )	Bushing	1
49	VTVT00207	( )	Knob M8	1
50	MPVR05839	( )	Knob	1
51	897247	( )	Washer, D. 12x36x2.5, Uni6593	1
52	897241	( )	Nut, M.12, Inox, A2	1
53	MLML00540	( )	Spring, Squeegee	2
54	897112	( )	Washer, Flat, 6,00x18,00x1,6	2
55	897105	( )	Nut, M6, Inox	2

SQUEEGEE GROUP

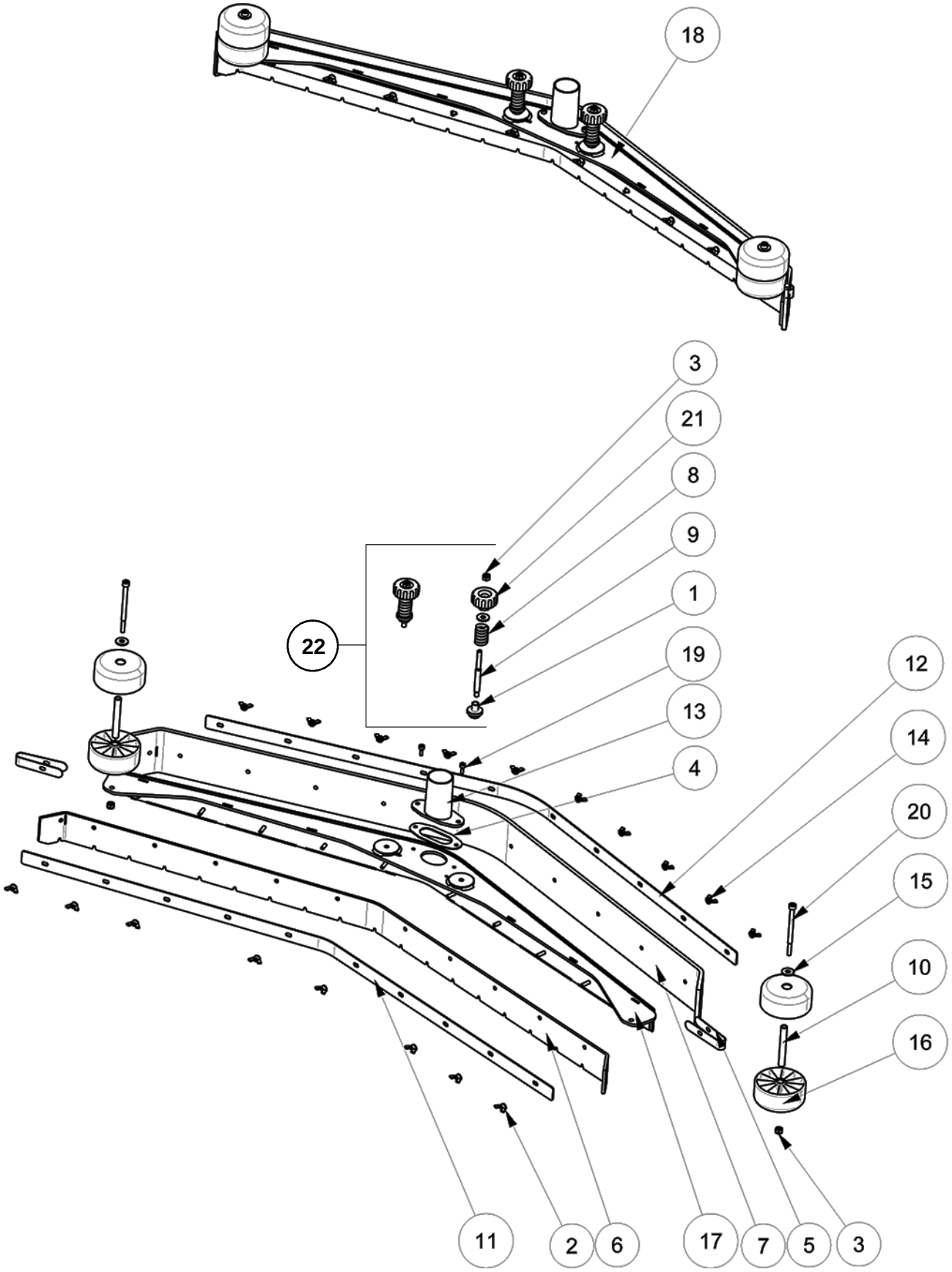

SQUEEGEE GROUP

Ref.	Part No.	Mfr. Date	Description	Qty.
1	LAFN11395	( )	Bushing Squeegee	2
2	VTDD00171	( )	Nut M6 Inox	18
3	VTDD01701	( )	Nut M8 Inox+Zin.	4
4	GUGO06700	( )	Gasket Squeegee	1
5	MPVR06002	( )	Duct, Lock Flap	2
6	MPVR06557	( )	Blade, Sqge, Front, Linatex [Std]	1
6	MPVR05908	( )	Blade, Sqge, Front, Latex	1
6	MPVR05934	( )	Blade, Sqge, Front, Pu	1
7	MPVR06558	( )	Blade, Sqge, Rear, Linatex [Std]	1
7	MPVR05909	( )	Blade, Sqge, Rear, Latex	1
7	MPVR05935	( )	Blade, Sqge, Rear, Pu	1
8	MLML00502	( )	Spring Squeegee	2
9	LAFN11394	( )	Pin Squeegee	2
10	LAFN04127	( )	Pin, Roller, Bumper	2
11	LAFN08930	( )	Fixed Blade Front Nozzle Ct 230 Bt105	1
12	LAFN08931	( )	Fixed Blade Rear Nozzle Ct 230 Bt105	1
13	LAFN08938	( )	Connector	1
14	897106	( )	Washer, Flat, 6,00x11,00x1,6, Ss	18
15	897120	( )	Washer, D.8x24, Uni6593, Inox	4
16	RTRT00510	( )	Wheel Bumper Ral7040	4
17	LAFN08929	( )	Plate, Wiper	1
18	KTRI06595	( )	Sqge Assy W/Linatex Blades, 100,105	1
19	897352	( )	Screw, Tcei, M.6x16	2
20	VTVT67560	( )	Screw Tcei M8x110 Inox Aisi 304	2
21	VTVR00047	( )	Knob D.50 M8	2
22	KTRI05628	( )	Kit, Knobs, Squeegee	1

BATTERY COMPARTMENT GROUP (105cm Disk Model)

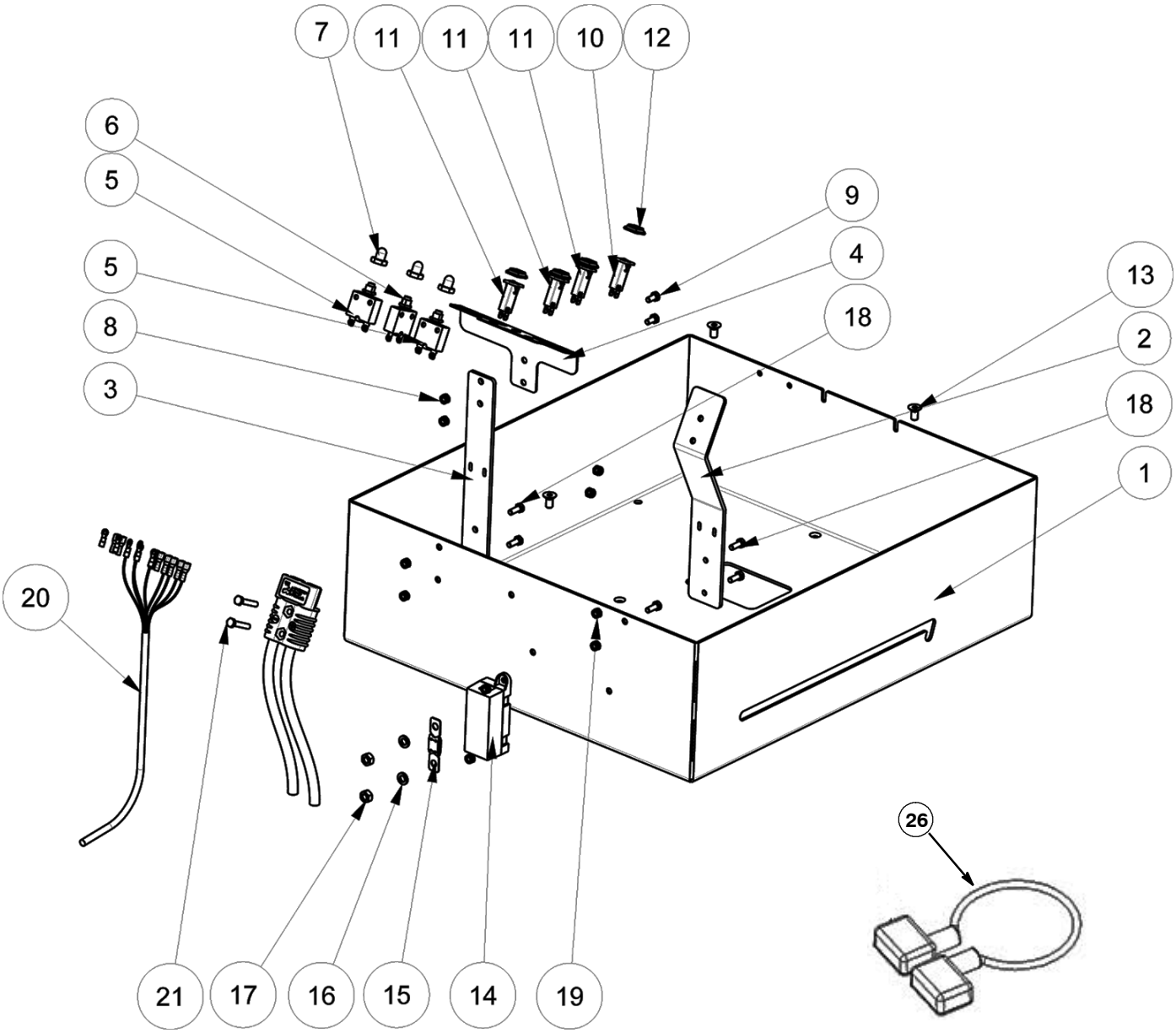

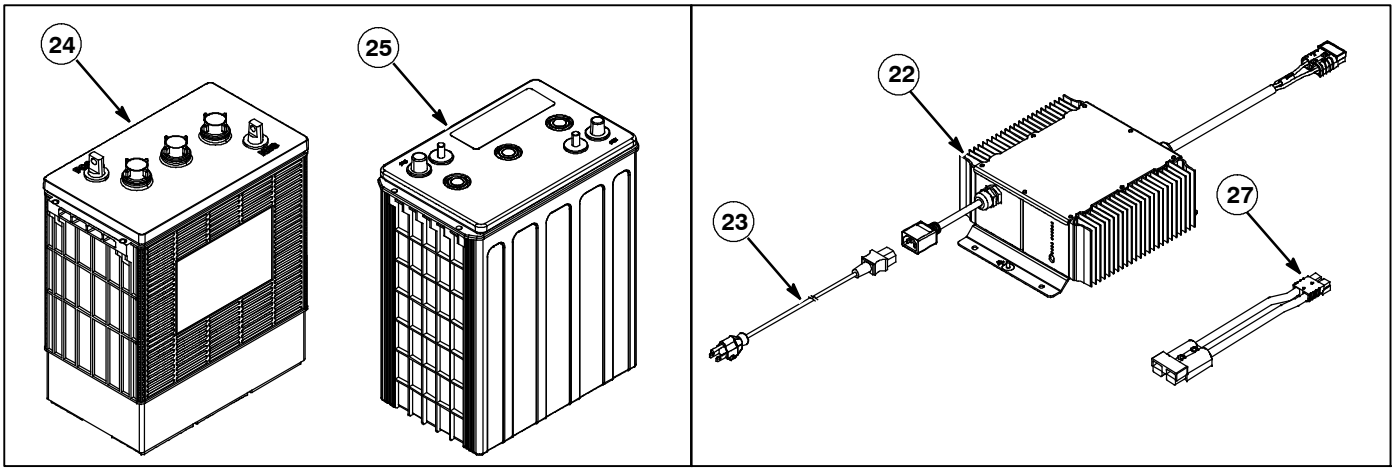

BATTERY COMPARTMENT GROUP (105cm Disk Model)

Ref.	Part No.	Mfr. Date	Description	Qty.
1	LAFN11891	( )	Housing	1
2	LAFN11892	( )	Bracket	1
3	LAFN11893	( )	Support	1
4	LAFN11894	( )	Bracket	1
5	METT00138	( )	Fuse 50a	2
6	METT00132	( )	Fuse 30a	1
7	MEVR02900	( )	Cap Circuit Breaker	3
8	897105	( )	Nut, M6, Inox	2
9	897130	( )	Screw, Te, M6x12, Uni5739, A2	2
10	METT00137	( )	Fuse 4a	1
11	METT00136	( )	Fuse 3a	3
12	MEVR02864	( )	Cap	4
13	897394	( )	Screw, Tspei, M8x16	3
14	MEVR00146	( )	Fuse Box	1
15	MEVR01925	( )	Fuse 150a	1
16	897216	( )	Washer, D. 8, Grw, Uni1751, Inox	2
17	897229	( )	Nut, M8, Uni5588, Inox, A2	2
18	897128	( )	Screw Te 6x16 Uni5739	6
19	897105	( )	Nut, M6, Inox	8
20	MECB02350	( )	Wiring (Main Harness)	1
21	897321	( )	Screw, M6x35, Uni5739, Inox	2
22	1043662	( )	Charger, 36vdc 21a 85- 265vac 1ph 45/65hz	1
23	1017079	( )	Cord, Extn, 16ga /3, 10ft [Sjt]	1
24	1070587	( )	Battery, Wet, 06vdc 0360ah, W/ Cart [Tr]	1
25	1262287	( )	Battery, Agm, 06vdc 350ah	1
26	897357	( )	Cable, Bridge, Battery M8, 70	1
27	223679	( )	Cable Assy, 06GA RED / BLK, 050A /175A	1

BATTERY COMPARTMENT GROUP (100cm Cylindrical Brush Model)

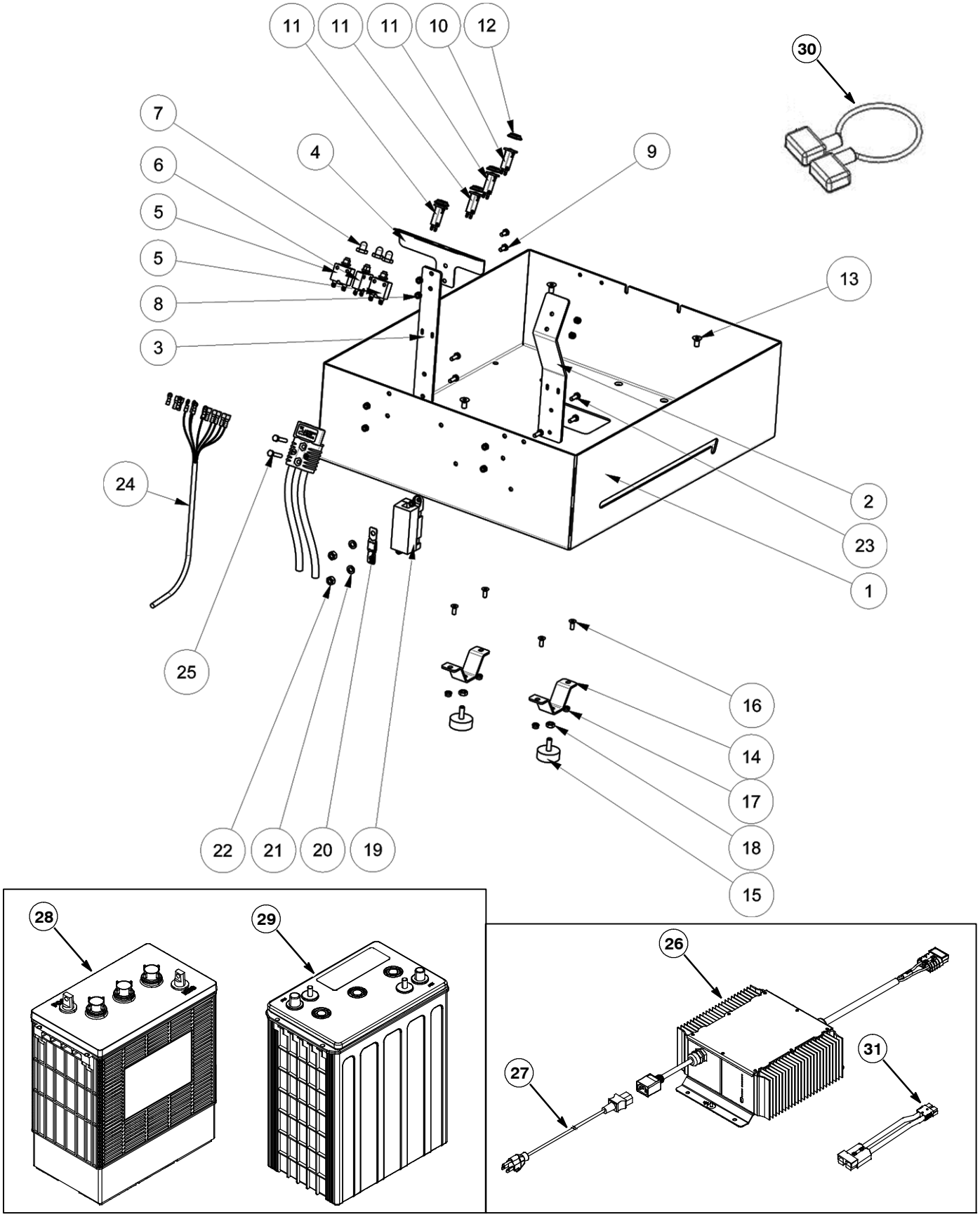

BATTERY COMPARTMENT GROUP (100cm Cylindrical Brush Model)

Ref.	Part No.	Mfr. Date	Description	Qty.
1	LAFN11891	( )	Housing	1
2	LAFN11892	( )	Bracket	1
3	LAFN11893	( )	Support	1
4	LAFN11894	( )	Bracket	1
5	METT00138	( )	Fuse 50a	2
6	METT00132	( )	Fuse 30a	1
7	MEVR02900	( )	Cap Circuit Breaker	3
8	897105	( )	Nut, M6, Inox	2
9	897130	( )	Screw, Te, M6x12, Uni5739, A2	2
10	METT00137	( )	Fuse 4a	1
11	METT00136	( )	Fuse 3a	3
12	MEVR02864	( )	Cap	4
13	897394	( )	Screw, Tspei, M8x16	3
14	LAFN11895	( )	Support	2
15	ABGO00026	( )	Vibration Damp	2
16	VTVT00832	( )	Screw Tspei M6x16 Inox	4
17	897105	( )	Nut, M6, Inox	12
18	VTDD00530	( )	Nut M8 Uni 5589	2
19	MEVR00146	( )	Fuse Box	1
20	MEVR01925	( )	Fuse 150a	1
21	897216	( )	Washer, D. 8, Grw, Uni1751, Inox	2
22	897229	( )	Nut, M8, Uni5588, Inox, A2	2
23	897128	( )	Screw Te 6x16 Uni5739	6
24	MECB02350	( )	Wiring (Main Harness)	1
25	897321	( )	Screw, M6x35, Uni5739, Inox	2
26	1043662	( )	Charger, 36vdc 21a 85- 265vac 1ph 45/65hz	1
27	1017079	( )	Cord, Extn, 16ga /3, 10ft [Sjt]	1
28	1070587	( )	Battery, Wet, 06vdc 0360ah, W/ Cart [Tr]	1
29	1262287	( )	Battery, Agm, 06vdc 350ah	1
30	897357	( )	Cable, Bridge, Battery M8, 70	1
31	223679	( )	Cable Assy, 06GA RED / BLK, 050A /175A	1

MANUAL BATTERY WATERING SYSTEM (OPTION)

355813

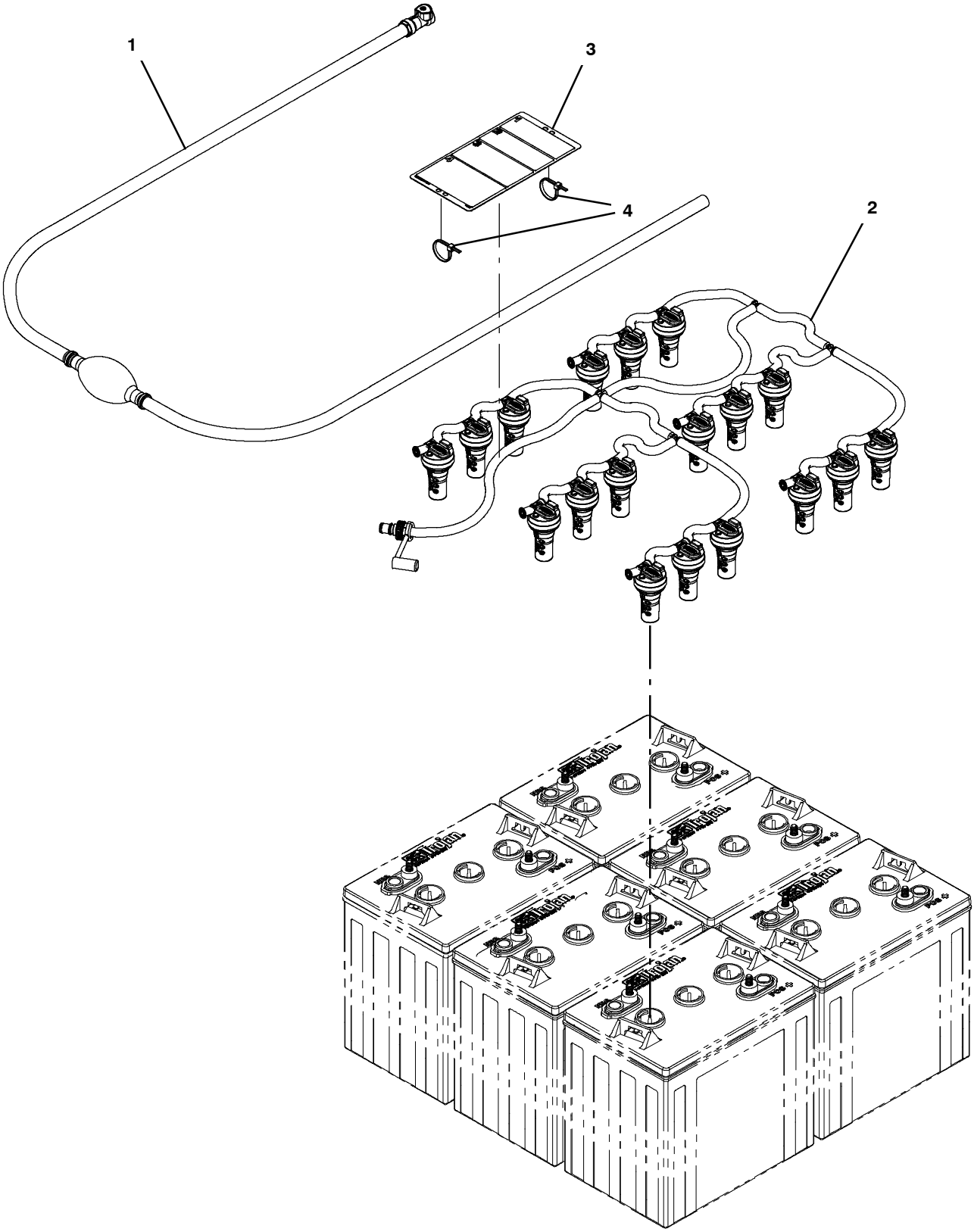

MANUAL BATTERY WATERING SYSTEM (OPTION)

	Ref.	Part No.	Mfr. Date	Description	Qty.
∇		9045074*	( )	Fill Kit, 6 Btry, Mnl, Ci [Trojan]	1
▲	1	1236295	( )	Pump, Hand, Battery	1
▲	2	1248178	( )	Manifold Assy, Water, 6 Btry [Trojan]	1
▲	3	1253250	( )	Label, Tag, Battery [Bwt Watering]	1
▲	4	130773	( )	Tie, Cable, Nyl, 11.0l, .14w, 3.0 Max. D	2

*THIS KIT IS INTENDED FOR USE WITH TROJAN® LEAD ACID BATTERIES ONLY.

∇ ASSEMBLY
▲ INCLUDED IN ASSEMBLY
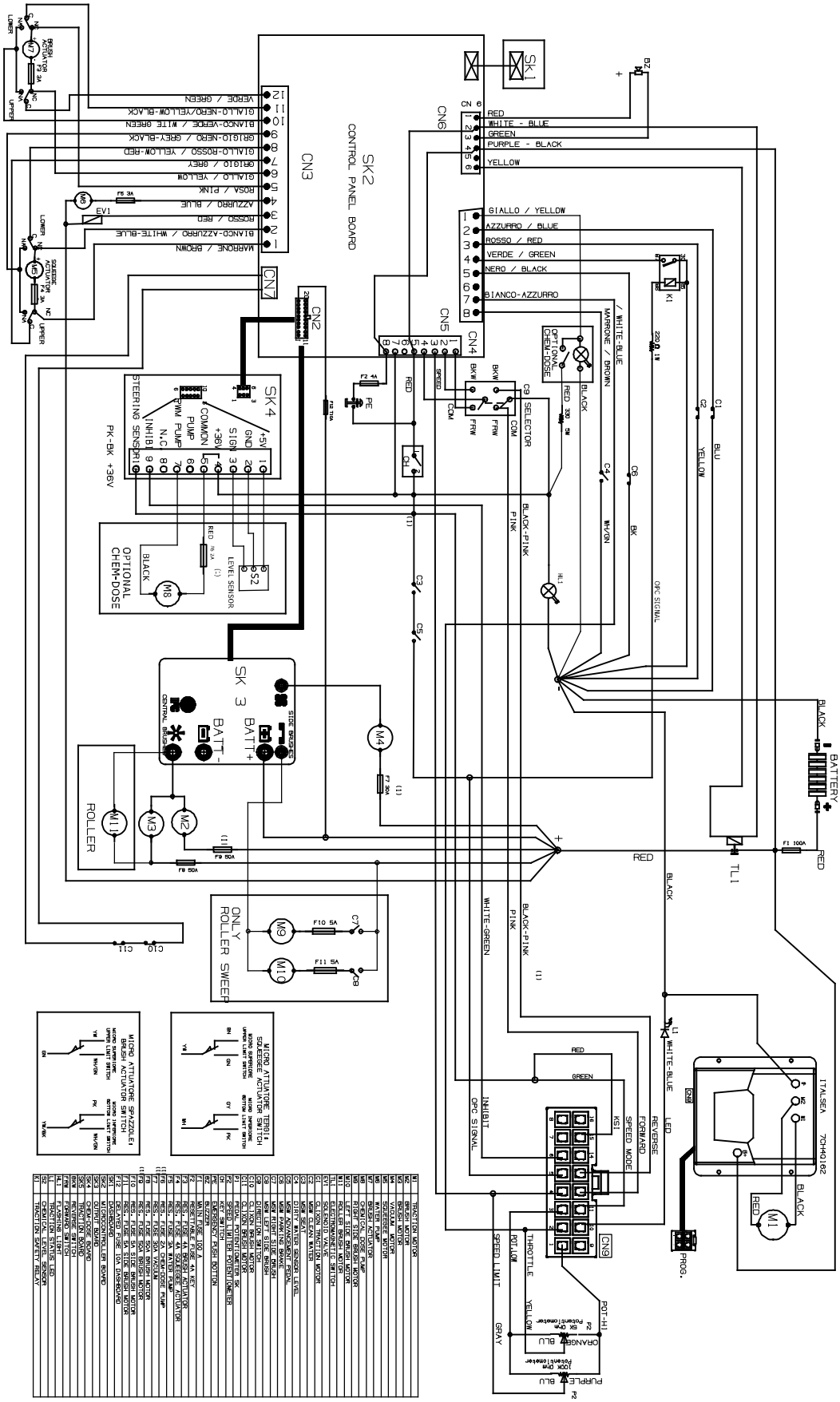
ELECTRICAL DIAGRAM