S30
(Diesel)

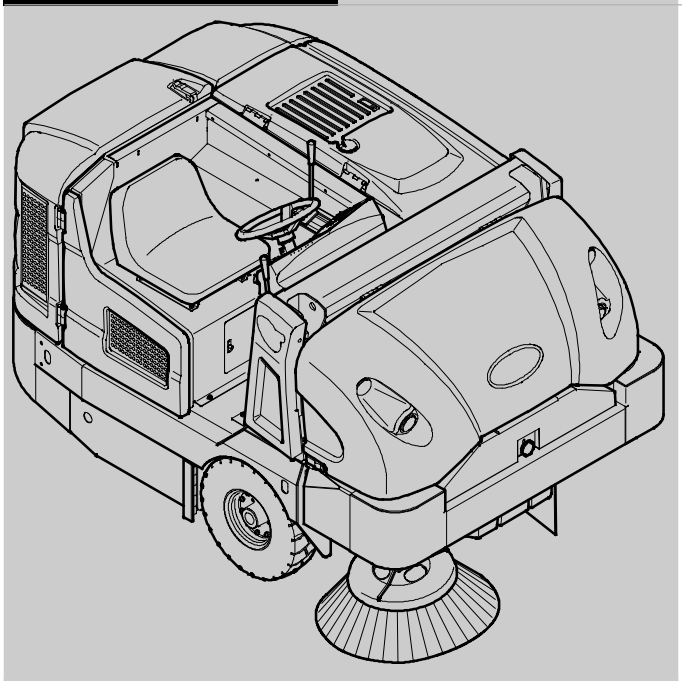

Sweeper Parts Manual

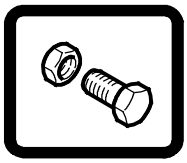

SweepSmart ™ System
Tennant*True*® *Parts*
IRIS® a Tennant Technology

CE

Global

For latest parts manual or other language operator manual, visit:

www.tennantco.com/manuals

9004091
Rev. 10 (8-2014)

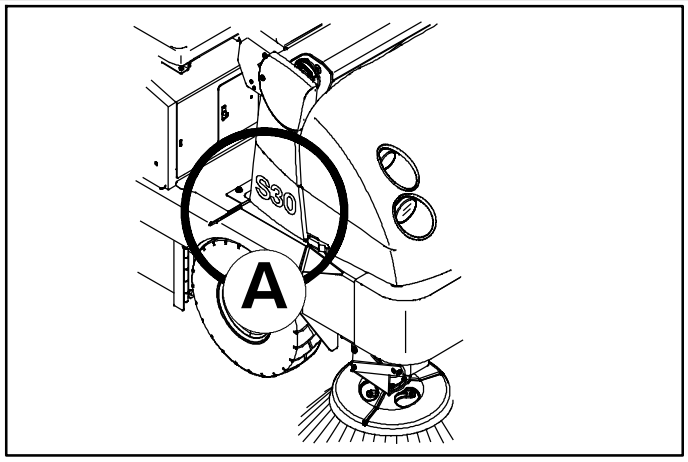

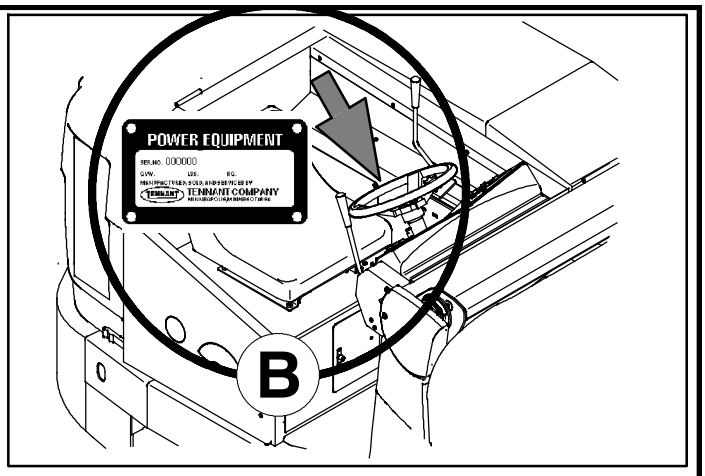

Ref	Part No.	Serial Number	Description	Qty.
1	82681	(000000–)	Bracket Wldt, Lpg Mount	1
▽ 2	63810	(000000–)	Latch Assy, Lpg Tank Mtg, W/Nut	4
▲ 3	51839	(000000–)	Nut Adjustable, Lpg Tank Mtg	2
4	49263	(000000–)	Tie, Cable	3
5	82556	(000000–001039)	Bracket, Vaporizer	1
6	54930	(000000–)	Vaporizer, LPG	1

D

C

EN

HOW TO ORDER PARTS - See diagram above

Only use TENNANT Company supplied or equivalent parts. Parts and supplies may be ordered online, by phone, by fax or by mail.

Follow the steps below to ensure prompt delivery.

1. **(A)** Identify the machine model.
2. **(B)** Identify the machine serial number from the data plate.
3. **(C)** Ensure the proper serial number is used from the parts list.
4. Identify the part number and quantity. Do not order by page or reference numbers.
5. Provide your name, company name, customer ID number, billing and shipping address, phone number and purchase order number.
6. Provide detail shipping instructions.

(D) ▽ - Identifies an assembly
▲ - Identifies parts included in assembly

Please fill out at time of installation for future reference.

Model No. - _____

Serial No. - _____

Machine Options - _____

Sales Rep. - _____

Sales Rep. phone no. - _____

Customer ID Number - _____

Installation Date - _____

Tennant Company
PO Box 1452
Minneapolis, MN 55440
Phone: (800) 553-8033 or (763) 513-2850
www.tennantco.com

Tennant N.V.
Industrielaan 6 5405 AB
P.O. Box 6 5400 AA Uden -
The Netherlands
europe@tennantco.com
www.tennantco.com

テナントカンパニー日本支店
〒210-0916神奈川県川崎市幸区南幸町2-9サンカビル5F
TEL:044-556-1201 FAX:044-556-1202
www.tennant.co.jp

Thermo-Sentry, 1-STEP, EasyOpen, MaxPro2, InstantAccess, II-Speed, Perma-Filter, Duramer, Lower Total Cost of Ownership, Touch-N-Go, and Cab Forward ErgoSpace are trademarks of Tennant Company.

Specifications and parts are subject to change without notice.

Copyright © 2008, 2009, 2010, 2011, 2012, 2013, 2014 TENNANT Company, Printed in U.S.A.

BG

КАК ДА ПОРЪЧВАМЕ ЧАСТИ - Вижте схемата по-горе

Използвайте само части, доставени от TENNANT или техни еквиваленти. Частите и доставките могат да се поръчат онлайн, по телефон, факс или по пощата.

Следвайте долупосочените стъпки, за да си осигурите бърза и точна доставка.

1. **(A)** Посочете модела на машината.
2. **(B)** Посочете серийния номер на машината от табелката с техническите данни.
3. **(C)** Уверете се, че сте използвали точния сериен номер от списъка с части.
4. Посочва номера на частта и количеството. Не поръчвайте части според страницата или референтните номера.
5. Посочете своето име, наименованието на фирмата, клиентския номер, адреса за получаване на сметката и доставката, тел.номер и номера на поръчката.
6. Посочете подробни инструкции за доставката.

(D) ▽ - посочва начин на монтаж
▲ - посочва частите, включени в монтажа

Моля, попълнете по време на монтажа за бъдеща справка.

Модел Э - _____
Сериен Э - _____
Опции на машината - _____
Търговски представител - _____
Тел. Э на търг. представител - _____
Клиентски Э - _____
Дата на монтаж - _____

CN

如何订购部件 – 参见下表

仅使用 TENNANT 公司提供的或同等部件。部件和供应可以在线订购，通过电话、传真或邮件订购。
请遵循下面的步骤确保及时交付。

1. (A) 确定机器型号。
2. (B) 从数据标签确定机器序列号。
3. (C) 确保使用部件列表中的正确序列号。
4. 确定部件号和数量。
   不要按页面或参考编号订购。
5. 提供您的姓名、公司名称、客户 ID 号、付帐和送货地址、电话号码和采购单编号。
6. 提供详细的送货说明。

(D) ▽ – 确定组件
▲ – 确定组件中包含的组件

请在安装时填写供未来参考。

型号 – _____
序列号 – _____
机器选项 – _____
销售代表– _____
销售代表电话号码 – _____
客户 ID 编号 – _____
安装日期 – _____

CZ

OBJEDNÁVÁNÍ DÍLŮ - Viz schéma výše.

Pou ívejte pouze díly dodané společností TENNANT Company nebo jim odpovídající. Díly a materiál lze objednat online, telefonem, faxem nebo poštou.

Aby bylo zajištěno rychlé dodání, postupujte podle kroků uvedených ní e.

1. **(A)** Zjistěte model stroje.
2. **(B)** Zjistěte sériové číslo stroje z výrobního štítku.
3. **(C)** Pou ijte správné sériové číslo ze seznamu dílů.
4. Určete číslo a mno ství dílů.
   Neobjednávejte podle stran nebo referenčních čísel.
5. Uveďte jméno, název společnosti, číslo ID zákazníka, fakturační a dodací adresu, telefonní číslo a číslo objednávky.
6. Uveďte podrobné pokyny pro dodání.

(D) ▽ - označuje sestavu
▲ - označuje díly v sestavě

Vyplňte během sestavování pro budoucí potřebu.

Číslo modelu - _____
Sériové číslo - _____
Doplňky zařízení - _____
Obchodní zástupce - _____
Tel. č. obchodního zástupce - _____
Číslo ID zákazníka - _____
Datum instalace - _____

DE

BESTELLEN VON ERSATZTEILEN - Siehe oben stehendes Diagramm.

Verwenden Sie nur von TENNANT gelieferte oder gleichwertige Ersatzteile. Ersatz- und Verschleißteile können online, telefonisch, per Fax oder per E-Mail bestellt werden.

Befolgen Sie für eine umgehende Lieferung die folgenden Schritte.

1. **(A)** Geben Sie das Modell der Maschine an.
2. **(B)** Geben Sie die Seriennummer der Maschine an (auf dem Datenaufkleber).
3. **(C)** Achten Sie darauf, dass die richtigen Seriennummer aus der Ersatzteilliste verwendet wird.
4. Geben Sie die Ersatzteilnummer und die Menge an.
   Bestellen Sie nicht nach Seitenzahl oder Referenznummern.
5. Geben Sie Ihren Namen, den Firmennamen, die Kundennummer, die Rechnungs- und Lieferadresse, die Telefonnummer und die Einkaufsauftragsnummer an.
6. Erteilen Sie genaue Versandanweisungen.

(D) ▽ - steht für eine Einheit
▲ - steht für Einzelteile einer Einheit

Bitte bei der Inbetriebnahme als Referenzangabe ausfüllen.

Modellnr. - _____
Seriennr. - _____
Maschinenoptionen - _____
Verkäufer - _____
Telefonnummer des Verkäufers - _____
Kundennummer - _____
Installationsdatum - _____

DK

BESTILLING AF RESERVEDELE - Se ovenstående tabel.

Brug kun reservedele, der er fremstillet af TENNANT, eller dele af tilsvarende kvalitet. Reservedele og tilbehør kan bestilles online, pr. telefon, pr. fax eller pr. brev.

Følg nedenstående trin for at sikre hurtig levering.

1. **(A)** Identificér maskinmodellen.
2. **(B)** Identificér maskinens serienummer på datamærkaten.
3. **(C)** Kontrollér, at det rigtige serienummer bruges i reservedelslisten.
4. Identificér reservedelsnummeret og antallet. Bestil ikke efter side- eller referencenumre.
5. Angiv dit navn, firmanavn, kunde- id- nummer, faktureringsadresse og leveringsadresse, telefonnummer og indkøbsordrenummer.
6. Angiv detaljerede instruktioner til forsendelse.

(D) ▽ - identificerer en enhed
▲ - identificerer reservedele i en enhed

Udfyld venligst på installationstidspunktet til fremtidig brug.

Modelnr. - _____
Serienr. - _____
Maskinekstraudstyr - _____
Salgskonsulent. - _____
Salgskonsulentens tlf. - _____
Kunde- id- nr. - _____
Installationsdato - _____

EE

KUIDAS VARUOSI TELLIDA – vaadake alltoodud joonist

Kasutage ainult TENNANT Company poolt tarnitud või samaväärseid varuosi. Varuosi ja tarvikuid saab tellida Interneti, telefoni, faksi või posti teel.

Kiire kohaletoimetamise tagamiseks järgige alltoodud juhiseid.

1. **(A)** Märkige masina mudel.
2. **(B)** Märkige andmesildil olev masina seerianumber.
3. **(C)** Veenduge, et olete valinud varuosade loendist õige seerianumbri.
4. Märkige varuosa number ja kogus. Ärge tellige lehekülje- või viitenumbri alusel.
5. Märkige oma nimi, ettevõtte nimi, kliendinumber, arveldus- ja saatmisaadress, telefoninumber ja ostutellimuse number.
6. Lisage täpsed saatmisjuhised.

(D) ▽ - tähistab komplekti
▲ - tähistab komplektis olevaid osii

Palun täitke paigaldamise ajal edaspidiseks viitamiseks.

Mudeli number - _____
Seerianumber - _____
Masina lisavarustus - _____
Müügiesindus - _____
Müügiesinduse telefoninumber - _____
Kliendinumber - _____
Paigaldamise kuupäev - _____

ES

CÓMO SOLICITAR PIEZAS - Consulte el diagrama anterior.

Utilice sólo las piezas suministradas por TENNANT Company o piezas equivalentes. Puede solicitar las piezas a través de internet, por teléfono, por fax o por correo.

Siga los siguientes pasos para que la entrega sea rápida.

1. **(A)** Indique el modelo de máquina.
2. **(B)** Indique el número de serie de la etiqueta de datos.
3. **(C)** Asegúrese de que indica el número de serie correcto de la lista de piezas.
4. Indique la cantidad y el número de la pieza. No realice el pedidoindicando el número de página o el de referencia.
5. Incluya su nombre, el nombre de la empresa, el ID de cliente, las direcciones de envío y facturación, el número de teléfono y el número del pedido de compra.
6. Facilite instrucciones de envío.

(D) ▽ - identifica un conjunto
▲ - identifica piezas de un conjunto

Rellene estos datos cuando realice la instalación para utilizarlos como referencia en el futuro.

Nº modelo - _____
Nº serie - _____
Opciones de la máquina - _____
Vendedor - _____
Nº teléfono vendedor - _____
Nº cliente - _____
Fecha de instalación - _____

FI

KUINKA VARAOSIA TILATAAN - katso kuvaa yllä.

Käytä ainoastaan TENNANTIN toimittamia tai niitä vastaavia varaosia. Voit tilata varaosia ja tarvikkeita internetistä, puhelimitse, faksilla tai sähköpostilla.

Noudata seuraavia ohjeita täsmällisen toimituksen varmistamiseksi.

1. **(A)** Katso koneen malli.
2. **(B)** IKatso koneen sarjanumero sen tunnustarrasta.
3. **(C)** Varmista, että osaluettelosta, että käytät oikeaa sarjanumeroa.
4. Katso osanumero ja kappalemäärä. Älä tilaa ilmoittamalla sivu- tai viitenumeroita.
5. Ilmoita nimesi, yrityksesi nimi, asiakasnumero, laskutus- ja toimitusosoite, puhelinnumero ja ostotilauksen numero.
6. Ilmoita yksityiskohtaiset toimitusosoitteet.

(D) ▽ - tarkoittaa kokoonpanoa
▲ - tarkoittaa kokoonpanoon sisältyviä osia

Ole hyvä ja täytä ottaessasi koneen käyttöön myöhempiä tarpeita varten.

Mallinumero - _____
Sarjanumero - _____
Koneen lisävarusteet - _____
Myyntiedustaja - _____
Myyntiedustajan puhelinnumero - _____
Asiakasnumero - _____
Asennuspäivä - _____

FR

COMMENT COMMANDER DES PIÈCES DÉTACHÉES - Voir le schéma ci- dessus.

Utilisez uniquement des pièces fournies par la société TENNANT ou équivalentes. Les pièces et fournitures peuvent être commandées en ligne, par téléphone, fax, ou par courrier.

Suivez les étapes ci- dessous pour assurer une livraison rapide.

1. **(A)** Identifiez le modèle de la machine.
2. **(B)** Identifiez le numéro de série de la machine, à partir de l'étiquette signalétique.
3. **(C)** Assurez- vous que le numéro de série correct est utilisé à partir de la liste de pièces détachées.
4. Identifiez le numéro de pièce et la quantité. Ne commandez pas par page ou numéros de référence.
5. Fournissez votre nom, le nom de votre société, votre numéro d'identification de client, l'adresse de facturation et d'expédition, le numéro de téléphone et le numéro du bon de commande.
6. Fournissez des instructions d'expédition détaillées.

(D) ▽ - identifie un assemblage
▲ - identifie les pièces composant l'assemblage

A remplir au moment de l'installation à titre de référence.

Nº du modèle - _____
Nº de série - _____
Options de la machine - _____
Agent commercial - _____
Nº tél. de l'agent commercial - _____
Numéro d'identification client - _____
Date d'installation - _____

GR

ΤΡΟΠΟΣ ΠΑΡΑΓΓΕΛΙΑΣ ΑΝΤΑΛΛΑΚΤΙΚΩΝ - Βλ. παραπάνω διάγραμμα.

Χρησιμοποιήστε μόνο ανταλλακτικά παρεχόμενα από την TENNANT Company ή ισοδύναμα. Τα ανταλλακτικά και αναλώσιμα μπορούν να παραγγελθούν online, τηλεφωνικά, με φαξ ή ταχυδρομικά.

Ακολουθήστε τα παρακάτω βήματα για να εξασφαλίσετε την έγκαιρη αποστολή τους.

1. **(A)** Βρείτε το μοντέλο μηχανήματος.
2. **(B)** Βρείτε τον αριθμό σειράς του μηχανήματος από την ετικέτα στοιχείων.
3. **(C)** Βεβαιωθείτε ότι χρησιμοποιείται ο σωστός αριθμός σειράς από τον κατάλογο ανταλλακτικών.
4. Βρείτε κωδικό ανταλλακτικού και ποσότητα. Μην παραγγέλνετε βάσει σελίδας ή αριθμών αναφοράς.
5. Δώστε το όνομα σας, όνομα εταιρείας, ID (κωδικό) πελάτη, διεύθυνση τιμολόγησης και αποστολής, αριθμό τηλεφώνου και αριθμό εντολής προμήθειας.
6. Δώστε λεπτομερείς πληροφορίες αποστολής.

(D) ▽ - υποδηλώνει υποσύστημα
▲ - υποδηλώνει τα μέρη που περιλαμβάνονται στο υποσύστημα

Παρακαλούμε συμπληρώστε κατά την ώρα της εγκατάστασης για μελλοντική αναφορά.

Αρ. Μοντέλου - _____
Αρ. σειράς - _____
Επιλογές Μηχανήματος - _____
Εκπ. πωλήσεων - _____
Τηλ. εκπροσώπου πωλήσεων - _____
Αριθμός πελάτη - _____
Ημερομηνία εγκατάστασης - _____

HU

HOGYAN RENDELJÜNK ALKATRÉSZEKET - Lásd: fenti diagramm.

Kizárólag TENNANT vagy azzal egyenértékű cserealkatrészeket használjon. Az alkatrészeket és anyagokat meg lehet rendelni az Interneten keresztül, vagy telefonon, faxon és e-mailben.

A pontos szállítás érdekében kövesse az alábbi lépéseket.

1. **(A)** Adja meg a gép típusát.
2. **(B)** Az adatcímke alapján adja meg a gép gyártási számát.
3. **(C)** Ügyeljen arra, hogy a megfelelő gyártási számot válassza ki az alkatrészlistáról.
4. Adja meg a rendelési számot és a mennyiséget. A rendeléshez ne az oldalszámot vagy a hivatkozási számot használja.
5. Adja meg a nevét, a cége nevét, az ügyfélazonosító számát, a számlázási és szállítási címét, a telefonszámát és a rendelési számot.
6. Adjon részletes szállítási utasításokat.

(D) ▽ - a jel csomagra utal
▲ - a jel a csomagban található alkatrészekre utal

A későbbi visszakeresések érdekében kérjük, hogy a rovatokat az első üzembehelyezéskor töltse ki.

Típusszám - _____
Gyártási szám. - _____
A gép felszereltsége - _____
Kereskedelmi képviselő - _____
Kereskedelmi képviselő telefonszáma - _____
Ügyfél azonosító száma - _____
Üzembehelyezés dátuma - _____

HR

NARUIVANJE DIJELOVA - Pogledajte dijagram iznad

Koristite isključivo dijelove tvrtke TENNANT ili jednakovrijedne dijelova. Dijelove i potrošni materijal možete naručiti preko interneta, telefonom, faksom ili poštom.

Slijedite sljedeće korake kako biste osigurali brzu isporuku.

1. **(A)** Ustanovite model stroja.
2. **(B)** Ustanovite serijski broj stroja s pločice s podacima.
3. **(C)** Provjerite da koristite odgovarajući serijski broj sa spiska dijelova.
4. Odredite broj dijela i količinu. Ne naručujte na osnovu brojeva stranice ili referentnih brojeva.
5. Navedite vaše ime, ime tvrtke, korisnički identifikacijski broj, adresu za naplatu i dostavu, broj telefona i broj kupovine.
6. Navedite detaljne upute za dostavu.

(D) ▽ - Odredite sklop
▲ - Odredite dijelove uključene u sklop

Molimo ispunite prilikom montaže za buduće potrebe.

Broj modela - _____
Serijski broj - _____
Mogućnosti stroja - _____
Prodajni predstavnik - _____
Br. telefona prod. predst. - _____
Korisnčiki identifikacijski broj - _____
Datum montaže - _____

IT

COME ORDINARE LE PARTI - Vedere schema precedente.

Utilizzare solo ricambi forniti da TENNANT o equivalenti. Ricambi e forniture possono essere ordinati online, per telefono, via fax o per posta elettronica.

Per ottenere una consegna rapida, seguire i passaggi indicati di seguito.

1. **(A)** Identificare il modello della macchina.
2. **(B)** Identificare il numero di serie della macchina dall'etichetta dei dati.
3. **(C)** Utilizzare il numero di serie corretto presente nell'elenco delle parti di ricambio.
4. Identificare numero di parte e quantità. Non ordinare per numero di pagina o di riferimento.
5. Fornire nome del contatto, nome della società, numero di ID cliente, indirizzo di fatturazione e di spedizione, numero di telefono e numero di ordine di acquisto.
6. Fornire istruzioni dettagliate per la spedizione.

(D) ▽ - identifica un gruppo
▲ - identifica parti comprese in un gruppo

Compilare il modulo al momento dell'installazione per poterlo consultare in futuro in caso di necessità.

N. Modello - _____
N. Serie - _____
Opzioni della macchina - _____
Venditore - _____
Tel. venditore - _____
Numero ID cliente - _____
Data di installazione - _____

JP

パーツの発注方法 ?上記の図を参照してください

TENNANT社製のパーツまたは同等品のみをお使いください。
パーツやサプライ品のご注文は、オンライン、電話、FAX、または手紙でお願いいたします。
確実にお届けできるように、以下の情報お知らせください。

1. **(A)** 製品のモデル名をお知らせください。
2. **(B)** 製品のデータラベルに印刷されているシリアル番号をお知らせください。
3. **(C)** パーツリストを参照して、シリアル番号が正しいかご確認ください。
4. パーツ番号と数量をお知らせください。マニュアル/カタログのページ番号や参照番号でのご注文はご遠慮ください。
5. お客様のお名前、会社名、顧客ID番号、請求/発送先住所、電話番号、注文書番号をお知らせください。
6. 発送に関するご希望があれば、明記してください。

(D) ▽ – アセンブリを示します
▲ – アセンブリに含まれるパーツを示します

後日確認できるように、設置時に記入してください。

モデルNo. – _____
シリアルNo. – _____
製品のオプション– _____
販売代理店 – _____
販売代理店の電話番号 – _____
顧客ID番号 – _____
設置日 – _____

LT

KAIP UŽSISAKYTI DALIS - žr. diagramà viršuje

Naudokite tik "Tennant" kompanijos tiekiamas arba lygiavertes joms dalis. Dalis galite užsisakyti internetu, telefonu, faksu bei elektroniniu paštu.

Kad užsakymas būtų greitai įvykdytas, laikykitės išvardytų taisyklių.

1. **(A)** Nurodykite mašinos modelį.
2. **(B)** Norodykite mašinos serijos numerį, kurį rasite ant duomenų žymės.
3. **(C)** Įsitikinkite, kad nurodomas tikslus serijos numeris iš dalių sàrašo.
4. Nurodykite dalies numerį ir reikiamà kiekį. Neužsakinėkite pagal puslapius ar nuorodos numerius.
5. Nurodykite savo vardà, kompanijos pavadinimà, kliento ID numerį, sàskaitos išrašymo ir vežimo adresà, telefono numerį ir pirkimo užsakymo numerį.
6. Nurodykite išsamias gabenimo instrukcijas.

(D) ∇ - žymi sistemà
▲ - nurodo sistemos dalis

Prašome užpildyti montavimo metu, siekiant gauti informacijà ateityje.

Modelio nr. - _____
Serijos nr. - _____
Mašinos parinktys - _____
Prekybos atstovas - _____
Komivojažieriaus tel. nr. - _____
Pirkėjo ID numeris - _____
Sumontavimo data - _____

LV

KĀ PASŪTĪT REZERVES DETAĻAS - Skat. diagrammu iepriekš

izmantojiet tikai TENNANT Company piegādātās vai tām līdzvērtīgas rezerves detaļas. Daļas un piegādi var pasūtīt internetā, pa tālruni, pa faksu vai pastu.

Lai nodrošinātu savlaicīgu piegādi, sekojiet zemāk aprakstītajiem soļiem.

1. **(A)** Nosakiet mašīnas modeli.
2. **(B)** Nosakiet mašīnas sērijas numuru uz tehnisko datu uzlīmes.
3. **(C)** Pārliecinieties, ka tiek uzrakstīts attiecīgais sērijas numurs no detaļu saraksta.
4. Nosakiet detaļas numuru un skaitu. Veicot pasūtījumus neatsaucieties uz lappušu vai norādes numuriem.
5. Uzrakstiet savu vārdu, uzņēmuma nosaukumi, klienta identitātes numuru, adresi rēķina piesūtīšanai un piegādei un pirkuma pasūtījuma numuru.
6. Sniedziet detalizētu informāciju par piegādi.

(D) ∇ - nosaka ierīci i
▲ - nosaka detaļas, kas ir komplektā ar ierīci

Veicot uzstādīšanu, lūdzam pierakstīst attiecīgo informāciju izmantošanai turpmāk.

Modeļa Nr. - _____
Sērijas Nr. - _____
Iekārtas papildaprīkojums- _____
Pārdošanas pārst. - _____
Pārdošanas pārst. tālr. Nr. - _____
Klienta identitātes numuru- _____
Uzstādīšanas datums- _____

NL

HOE ONDERDELEN TE BESTELLEN - Zie schema hierboven.

Gebruik alleen onderdelen die door TENNANT Company zijn geleverd of soortgelijke onderdelen. Onderdelen en voorraden kunnen online, per telefoon, fax of schriftelijk besteld worden.

Volg de stappen hieronder om een juiste levering te garanderen.

1. **(A)** Bepaal het machinemodel.
2. **(B)** Lees het serienummer van de machine af van het gegevenslabel.
3. **(C)** Zorg dat het juiste serienummer wordt gebruikt uit de onderdelenlijst.
4. Bepaal het artikelnummer en het aantal. Bestel niet aan de hand van pagina's of referentienummers
5. Geef uw naam, bedrijfsnaam, klantnummer, factuur- en leveringsadres, telefoonnummer en bestelnummer op.
6. Geef gedetailleerde leveringsinstructies op.

(D) ▽ - geeft een eenheid aan
▲ - geeft de onderdelen van de eenheid aan

Vul tijdens installatie de onderstaande gegevens in voor eventueel toekomstig gebruik.

Modelnr. - _____
Serienr. - _____
Machine- opties - _____
Verkoopvert. - _____
Telnr. verkoopvert. - _____
Klantnummer - _____
Installatiedatum - _____

NO

HVORDAN BESTILLE DELER - Se diagram over.

Bruk kun deler levert av TENNANT Company eller ekvivalente deler. Deler og forsyninger kan bestilles online, per telefon, per faks eller per post.

Følg trinnene under for å sikre rask levering.

1. **(A)** Angi maskinmodellen.
2. **(B)** Angi maskinens serienummer fra typeskiltet.
3. **(C)** Forsikre deg om at korrekt serienummer brukes fra delelisten.
4. Angi delenummer og antall. Bestill ikke ut fra side- eller referansenumre.
5. Angi ditt navn, firmanavn, kunde- ID- nummer, fakturerings- og forsendelsesadresse, telefonnummer og innkjøpsordrenummer.
6. Angi detaljerte forsendelsesinstruksjoner.

(D) ▽ - angir en delegruppe
▲ - angir deler inkludert i en delegruppe

Fyll ut ved installasjonstidspunkt for fremtidig bruk.

Modellnr. - _____
Serienr.. - _____
Maskinens tillegg - _____
Salgsrep. - _____
Salgsrep. telefonnr. - _____
Kunde- ID- nummer - _____
Installasjonsdato - _____

PL

JAK ZAMAWIAĆ CZĘŚCI - patrz schemat powyżej.

Należy używać wyłącznie części dostarczanych przez firmę TENNANT Company lub równoważnych. Części i dostawy mogą być zamawiane online, przez telefon, faksem lub pocztą.

Aby zapewnić szybką dostawę, należy przestrzegać następujących wskazówek.

1. **(A)** Określić model maszyny.
2. **(B)** Określić numer seryjny maszyny znajdujący się na tabliczce znamionowej.
3. **(C)** Odszukać ten numer seryjny w wykazie części.
4. Określić numer części i ilość. Nie zamawiać na podstawie numeru strony lub liczby porządkowej wykazu.
5. Podać swoje nazwisko, nazwę firmy, numer identyfikacyjny klienta, adres dostawy i dostarczenia rachunku, numer telefonu i numer zamówienia zakupu.
6. Podać dokładne instrukcje dotyczące dostawy.

(D) ▽ - oznacza zespół
▲ - oznacza część w zespole

Prosimy wpisać datę instalacji do późniejszego wykorzystania.

Nr modelu- _____
Nr seryjny - _____
Opcje maszyny - _____
Przedst. sprzedaży - _____
Nr tel. przedst. sprzed. - _____
Nr ident. klienta - _____
Data instalacji - _____

PTG

COMO ENCOMENDAR PEÇAS - Consulte o diagrama acima.

Utilize apenas peças fornecidas pela TENNANT Company ou equivalentes. As peças e consumíveis podem ser encomendados online, por telefone, fax ou correio.

Siga os passos abaixo para garantir uma entrega rápida.

1. **(A)** Identifique o modelo da máquina.
2. **(B)** Identifique o número de série da máquina que se encontra na etiqueta de dados.
3. **(C)** Certifique- se de que usa o número de série correcto da lista de peças.
4. Identifique o número de produto e a quantidade. Não encomende através de números de página ou de referência.
5. Forneça o seu nome, o nome da empresa, o número de ID do cliente, os endereços de facturação e entrega, o número de telefone e o número da nota de encomenda.
6. Forneça instruções de entrega detalhadas.

(D) ▽ - identifica uma unidade
▲ - identifica peças incluídas numa unidade

Preencha na altura da instalação para futura referência.

Modelo nº - _____
Nº de série - _____
Opções da máquina - _____
Vendedor - _____
Telefone do vendedor - _____
Número de ID do cliente - _____
Data de instalação - _____

RU

КАК ЗАКАЗАТЬ ЗАПЧАСТИ - См. схему ниже.

Используйте только запчасти, поставляемые компанией TENNANT или их аналоги. Запасные части и расходные материалы можно заказать в режиме онлайн, телефоном, факсом или электронной почтой.

Для своевременной доставки следуйте описанным ниже инструкциям.

1. **(A)** Укажите модель машины.
2. **(B)** Укажите серийный номер машины, обозначенный на табличке технических данных.
3. **(C)** Удостоверьтесь, что надлежащий серийный номер перечислен в списке запчастей.
4. Укажите номер детали и нужное количество. Не используйте номера страниц или ссылок.
5. Укажите свое имя, название компании, идентификационный номер покупателя, расчетный адрес и адрес доставки, телефонный номер и номер заказа на покупку.
6. Укажите подробные сведения о доставке.

(D) ▽ - означает узел
▲ - обозначает деталь узла

Во время установки заполните, пожалуйста, эти сведения для того, чтобы ссылаться в дальнейшем.

Модель Э - _____
Серийный Э - _____
Опции машины - _____
Торговый представитель - _____
Телефон торгового представителя - _____
Идент. номер покупателя - _____
Дата установки - _____

SE

BESTÄLLNING AV RESERVDELAR - Se ovanstående schema.

Använd endast delar från Tennant Company eller likvärdiga. Delar och material kan beställas online, telefoniskt, per fax eller post.

Följ nedanstående steg för en snabb leverans.

1. **(A)** Identifiera maskinens modell.
2. **(B)** Identifiera maskinens serienummer på typskylten.
3. **(C)** Kontrollera att rätt serienummer används från dellistan.
4. Identifiera artikelnumret och mängden. Beställ inte med hjälp av sido- eller referensnummer.
5. Uppge ditt namn, företagets namn, kundens ID- nummer, faktura- och leveransadress, telefonnummer och ordernumret vid inköp.
6. Ge detaljerade transportanvisningar.

(D) ▽ - identifierar en modul
▲ - identifierar delar som ingår i en modul

Fyll i vid installation och spar för framtida bruk.

Modellnr. - _____
Serienr. - _____
Tilvalsutrustning - _____
Försäljare - _____
Försäljarens tel.nr. - _____
Kundnummer - _____
Installationsdatum - _____

SK

POSTUP PRI OBJEDNÁVANÍ ČASTÍ - Pozri vyššie uvedený diagram.

Vyu ívajte výhradne dielce dodané spoločnos ou TENNANT, alebo ich ekvivalenty. Dielce a polo ky je mo né objedna online, telefonicky, faxom, alebo poštou.

Na zabezpečenie promptného doručenia sa riaďte nasledovnými krokmi.

1. **(A)** Identifikujte model stroja.
2. **(B)** Z etikety s údajmi identifikujte sériové číslo stroja.
3. **(C)** Ubezpečte sa, e ste zadali správne sériové číslo zo zoznamu dielcov.
4. Identifikujte číslo dielu a mno stvo. Neobjednávajte pomocou čísel strán, alebo referenčných čísel.
5. Zadajte Vaše meno, meno spoločnosti, ID číslo zákazníka, fakturačnú a prepravnú adresu, telefónne číslo a objednávacie číslo dielu.
6. Uveďte podrobné prepravné pokyny.

(D) ▽ - identifikuje sadu
▲ - identifikuje časti sady

Vyplňte prosím pri inštalácii pre prípad potreby v budúcnosti.

č. modelu - _____
Sériové č. - _____
Zvláštne príslušenstvo stroja - _____
Obchodné zastúpenie - _____
Obch. zastúpenie tel. č. - _____
ID č. zákazníka - _____
Dátum inštalácie - _____

SL

NAROČANJE NADOMESTNIH DELOV - glejte zgornjo sliko.

Uporabljajte samo originalne nadomestne dele Tennant ali enakovredne dele. Dele in potrošni material lahko naročite prek spleta, po telefonu, faksu ali pošti.

Za zagotovitev čimbolj hitre dostave sledite spodnjim navodilom.

1. **(A)** Ugotovite model stroja.
2. **(B)** Na ploščici s podatki poiščite serijsko številko stroja.
3. **(C)** Poskrbite, da na seznamu nadomestnih delov poiščete pravilno serijsko številko.
4. Poiščite številko dela in potrebno količino. Pri naročilih ne navajajte strani ali referenčne številke.
5. Navedite svoje ime, ime podjetja, ID številko stranke, naslova za dostavo in izdajo računa, telefonsko številkoin številko naročila.
6. Navedite podrobna navodila za dostavo.

(D) ▽ - označuje sklop
▲ - označuje dele sklopa

Prosimo, da ob vgradnji izpolnite te podatke, da vam bodo v prihodnje na voljo.

Št. modela - _____
Serijska številka - _____
Dodatna oprema stroja - _____
Prodajni predstavnik - _____
Telefonska št. prodajnega predstavnika - _____
Številka stranke - _____
Datum vgradnje - _____

TR

PARÇALARIN S PAR ED LMES - Yukar daki emaya bak n.

Yaln zca TENNANT Company'den sa lanan veya e de erde parçalar kullan n. Parça veya sarf malzemeleri çevrimiçi olarak, telefonla, faksla veya postayla sipari edilebilir.

Zaman nda teslimat sa lamak için a a daki ad mlar izleyin.

1. **(A)** Makine modelini belirtin.
2. **(B)** Veri etiketinden makine seri numaras n belirtin.
3. **(C)** Parça listesinden uygun seri numaras n n kullan ld ndan emin olun.
4. Parça numaras n ve miktar n belirtin. Sayfa veya referans numaralar n kullanarak sipari vermeyin.
5. Ad n z , irketinizin ad n , mü teri kimlik numaran z , faturalama ve sevk yat adreslerini, telefon numaras n ve sat n alma sipari i numaras n belirtin.
6. Ayr nt l sevk yat talimatlar n belirtin.

(D) ▽ - bir tertibat belirtir
▲ - tertibattaki parçalar belirtir

leri tarihlerde ba vurmak için lütfen kurulum s ras nda doldurun.

Model No. - _____

Seri No. - _____

Makine Seçenekleri - _____

Sat Temsilcisi - _____

Sat Temsilcisi telefon no. - _____

Mü teri Kimlik Numaras - _____

Kurulum Tarihi - _____

Fig. 1 - General Recommended Maintenance Items

	Ref.	Part No.	Serial Number	Description	Qty.
▽		9004644	(000000-)	Maint Kit, 400Hr, Diesel [S30]	1
▲		369746	(000000-)	Element, Fltr, Air [Dn]	1
▲		55849	(000000-)	Element, Fltr, Oil, Spin-on [Ku]	1
▲		1017126	(000000-)	Element, Fltr, Fuel [Dn]	1
▲		25643	(000000-)	Belt, V, 42.5l [3v]	1
▲		31613	(000000-)	Strainer, Hyd, 025gpm 100mesh 03psi	1
▲		1021579	(000000-)	Filter Assy, Hyd, 10mic	1
▲		39827	(000000-)	Element, Fltr, Air, Safety	1
▽		9004077	(000000-)	Skirt Kit, Hppr Maint [S30]	1
▲		1035684	(000000-)	Bolt, Carriage, M8 X 1.25 X 30	16
▲		32491	(000000-)	Washer, Flat, 0.31, Std	10
▲		08713	(000000-)	Nut, Hex, Lock, M8 X 1.25, Nl, Ss	16
▲		1034168	(000000-)	Bracket, Sppt, Hppr Seal	1
▲		1045357	(000000-)	Skirt, Lip	1
▲		1045359	(000000-)	Skirt, Lip, Hppr	1
▲		1026798	(000000-)	Strap, Main, Lip	1
▲		1038037	(000000-)	Skirt, Hppr	1
▲		1038353	(000000-)	Skirt, Neo, .12, 06.65w 18.50l, 03/ Sl	1
▲		41178	(000000-)	Washer, Flat, 0.25, Fendr	5
▲		11635	(000000-)	Screw, Hex, M6 X 1.00 X 12, Nl, Ss	5
▽		9004078	(000000-)	Skirt Kit, Door, Hppr, Maint [S30]	1
▲		1044420	(000000-)	Seal, Door, Dump	1
▲		1030218	(000000-)	Cord, Sponge	1
▲		1044419	(000000-)	Plate, Retainer, Door, Dump	1
▲		1037345	(000000-)	Screw, Hex, M6 X 1.00 X 30, 9.8, Sems	24
▲		32490	(000000-)	Washer, Flat, 0.25, Std	24
▲		08712	(000000-)	Nut, Hex, Lock, M6 X 1.00, Nl, Ss	24
▲		1048891	(000000-)	Plate, Seal, Retainer	2
▲		1044950	(000000-)	Strap, Door, Dump, Side	2
▲		1026879	(000000-)	Seal, Wiper, Door	1
		1042101	(000000-)	Filter, Cyl, 11.09d, 13.31l, 6.6 Id	1
		9004545	(000000-)	Key, Ignition	1
		25643	(000000-)	Belt, V, 42.5l [3v]	1
		1058133	(000000-)	Belt, V, 37.3l [Ax]	1
		9004940	(000000-001312)	Skirt Kit, Side / Rear [S30]	1
		1045366	(001313-)	Skirt, Door, Brush	1
		1045354	(001313-)	Skirt, Door, Brush	1
		54190	(000000-)	Skirt, Neo, .37, 06.00w 44.65l, 04/ Sl Recirculation	1
		383160	(000000-001312)	Skirt, Neo, .18, 06.74w 49.00l, 04/ Sl Rear Skirt	1
		1045348	(001313-)	Skirt, Neo, .18, 06.74w 50.00l, 04/ Sl	1
		1032012	(000000-)	Skirt, Deflector Wheel Pocket Skirt	2
		1061961	(000000-)	Tire Assy, Solid, 20.8 X 5.0, W/ Brg	2
		53817	(000000-)	Tire Assy, Solid, 18.0x4.3 4.5bc/5bolt Solid Rear Tire	1
		1032515	(000000-)	Tire Assy, Pneu, 600x9 4.5bc/5bolt, Ce Pneumatic Front	1
		1005229	(000000-)	Tire Assy, Pneu, 5.00 4.5bc/5blt[R8ic70] Pneumatic Rear	1
		16411	(000000-)	Paint, Airdry, Off-White, 12oz (NOT EUROPE)	1
		16412	(000000-)	Paint, Airdry, Teal, 12oz, Solid (NOT EUROPE)	1
		377540	(000000-)	Paint, Airdry, Blk, 12oz (NOT EUROPE)	1
		377538	(000000-)	Paint, Airdry, Gray, 12oz (NOT EUROPE)	1
		377537	(000000-)	Paint, Airdry, Iron Gray, 12oz (NOT EUROPE)	1

Fig. 1 - General Recommended Maintenance Items

Ref.	Part No.	Serial Number	Description	Qty.
	1057710	(000000-)	Oil, Hyd [El, Iso 100, 01gal]	1
	1057711	(000000-)	Oil, Hyd [El, Iso 100, 05gal]	1
	1069019	(000000-)	Oil, Hyd [El, Iso 68, 01gal]	1
	1069020	(000000-)	Oil, Hyd [El, Iso 68, 05gal]	1
	1057707	(000000-)	Oil, Hyd [El, Iso 32, 01gal]	1
	1057708	(000000-)	Oil, Hyd [El, Iso 32, 05gal]	1
	99321	(000000-)	Oil, Hydraulic 68 [20l] (CE ONLY)	1

SECTION 2

Contents **Page**

Fig. 1 – Brushes, Replacement 2-4
Fig. 2 – Main Frame Group 2-6
Fig. 3 – Brush Door Group, Right 2-8
Fig. 4 – Brush Door Group, Left 2-10
Fig. 5 – Operator Station Group (000000-002099) 2-12
Fig. 6 – Operator Station Group (002100-) 2-14
Fig. 7 – Seat and Shroud Group, Diesel . . . 2-16
Fig. 8 – Engine Cover Group, Rear (000000-002099) 2-18
Fig. 9 – Engine Cover Group, Rear (002100-) 2-20
Fig. 10 – Engine Cover Group, Top (000000-002099) 2-22
Fig. 11 – Engine Cover Group, Top (002100-) 2-24
Fig. 12 – Engine Cover Group, Side (000000-002099) 2-26
Fig. 13 – Engine Cover Group, Side (002100-) 2-28
Fig. 14 – Instrument Panel Group, S30 2-30
Fig. 15 – Instrument Panel Group, S30 XP and X4 2-32
Fig. 16 – Steering Group (000000-002099) 2-34
Fig. 17 – Steering Group (002100-) . 2-36
Fig. 18 – Engine and Mount Group, Diesel . 2-38
Fig. 19 – Engine Governor and Electrical Group, Diesel 2-42
Fig. 20 – Engine Fuel Tank Group, Diesel . . 2-44
Fig. 21 – Engine Air Cleaner Group, Diesel 2-44
Fig. 22 – Engine Alternator and Battery Group, Diesel 2-48
Fig. 23 – Engine Muffler Group, Diesel S30 and XP 2-50
Fig. 24 – Engine Muffler Group, Diesel S30 X4 2-52
Fig. 25 – Engine Radiator Hoses Group, Diesel 2-54
Fig. 26 – Engine Radiator Mount and Fan Group (000000-002099) 2-56
Fig. 27 – Engine Radiator Mount and Fan Group (002100-) 2-58
Fig. 28 – Wheel Group, Rear Drive S30 and XP 2-60
Fig. 29 – Wheel Group, Rear Drive, S30 X4 2-62
Fig. 30 – Wheel Suspension Group, Rear Drive, S30 X4 2-64
Fig. 31 – Wheel Assembly, Rear, S30 and XP 2-66
Fig. 32 – Wheel Assembly, Rear, S30 X4 2-67
Fig. 33 – Wheel and Brakes Group, Front Solid (Standard) 2-68

Contents **Page**

Fig. 34 – Wheel and Brakes Group, Front Pneumatic (Option) 2-70
Fig. 35 – Brake Pedal and Parking Brake Group 2-72
Fig. 36 – Directional Pedal Group 2-74
Fig. 37 – Hydraulic Pump Linkage Group, S30 and XP 2-76
Fig. 38 – Hydraulic Pump Linkage Group, S30 X4 2-78
Fig. 39 – Hopper Group, Plastic 2-80
Fig. 40 – Hopper Group, Steel 2-82
Fig. 41 – Hopper Cylinder and Dump Door Group, Plastic 2-84
Fig. 42 – Hopper Cylinder and Dump Door Group, Steel 2-86
Fig. 43 – Hopper Cover Group (000000-002099) 2-88
Fig. 44 – Hopper Cover Group (002100-) 2-90
Fig. 45 – Hopper Lift Arms and Bumper Group, Plastic 2-92
Fig. 46 – Hopper Lift Arms and Bumper Group, Steel 2-94
Fig. 47 – Hopper Counter Weight Group, Steel 2-96
Fig. 48 – Hopper Pre-Filter Group 2-98
Fig. 49 – Hopper Vacuum Fan Group 2-100
Fig. 50 – Hopper Filter Shaker Group 2-102
Fig. 51 – Side Brush Lift Group, S30 2-104
Fig. 52 – Side Brush Motor and Pivot Group, S30 2-106
Fig. 53 – Side Brush Motor Group, S30 XP and X4 2-108
Fig. 54 – Side Brush Lift and Pivot Group, S30 XP and X4 2-110
Fig. 55 – Main Brush Lift Group, S30 2-112
Fig. 56 – Main Brush Lift Group, S30 XP and X4 2-114
Fig. 57 – Main Brush Drive Group 2-116
Fig. 58 – Hydraulic Schematic, S30 and XP 2-118
Fig. 59 – Hydraulic Schematic, S30 X4 . . . 2-120
Fig. 60 – Hydraulic Hose Group, S30 (000000-002999) 2-122
Fig. 61 – Hydraulic Hose Group, S30 (003000-) 2-124
Fig. 62 – Hydraulic Hose Group, S30 XP (000000-002999) 2-126
Fig. 63 – Hydraulic Hose Group, S30 XP (003000-) 2-128
Fig. 64 – Hydraulic Hose Group, S30 X4 (0000000-002999) 2-130
Fig. 65 – Hydraulic Hose Group, S30 X4 (003000-) 2-132
Fig. 66 – Hydraulic Reservoir Group 2-134

Contents **Page**

Fig. 67 – Hydraulic Cooler and Tubes Group (000000–002099) 2–136
Fig. 68 – Hydraulic Cooler and Tubes Group (002100–) 2–138
Fig. 69 – Hydraulic Pumps Group, S30 and XP 2–140
Fig. 70 – Hydraulic Pumps Group, S30 X4 2–142
Fig. 71 – Hydraulic Valve Group, S30 2–144
Fig. 72 – Hydraulic Valve Group, S30 XP and X4 2–146
Fig. 73 – Hydraulic Priority and Flow Divider Valve Group, S30 X4 . . 2–148
Fig. 74 – Electrical Schematic, S30 (000000–005699) (1 of 4) 2–150
Fig. 75 – Electrical Schematic, S30 (005700–) (1 of 4) 2–154
Fig. 76 – Electrical Schematic, S30 XP and X4 (000000–005699) (1 of 4) 2–158
Fig. 77 – Electrical Schematic, S30 XP and X4 (005700–) (1 of 4) 2–162
Fig. 78 – Electrical Schematic, Diesel Engine Harness 2–166
Fig. 79 – Electrical Wire Harnesses Group 2–168
Fig. 80 – Label Group 2–174

Fig. 1 - Brushes, Replacement

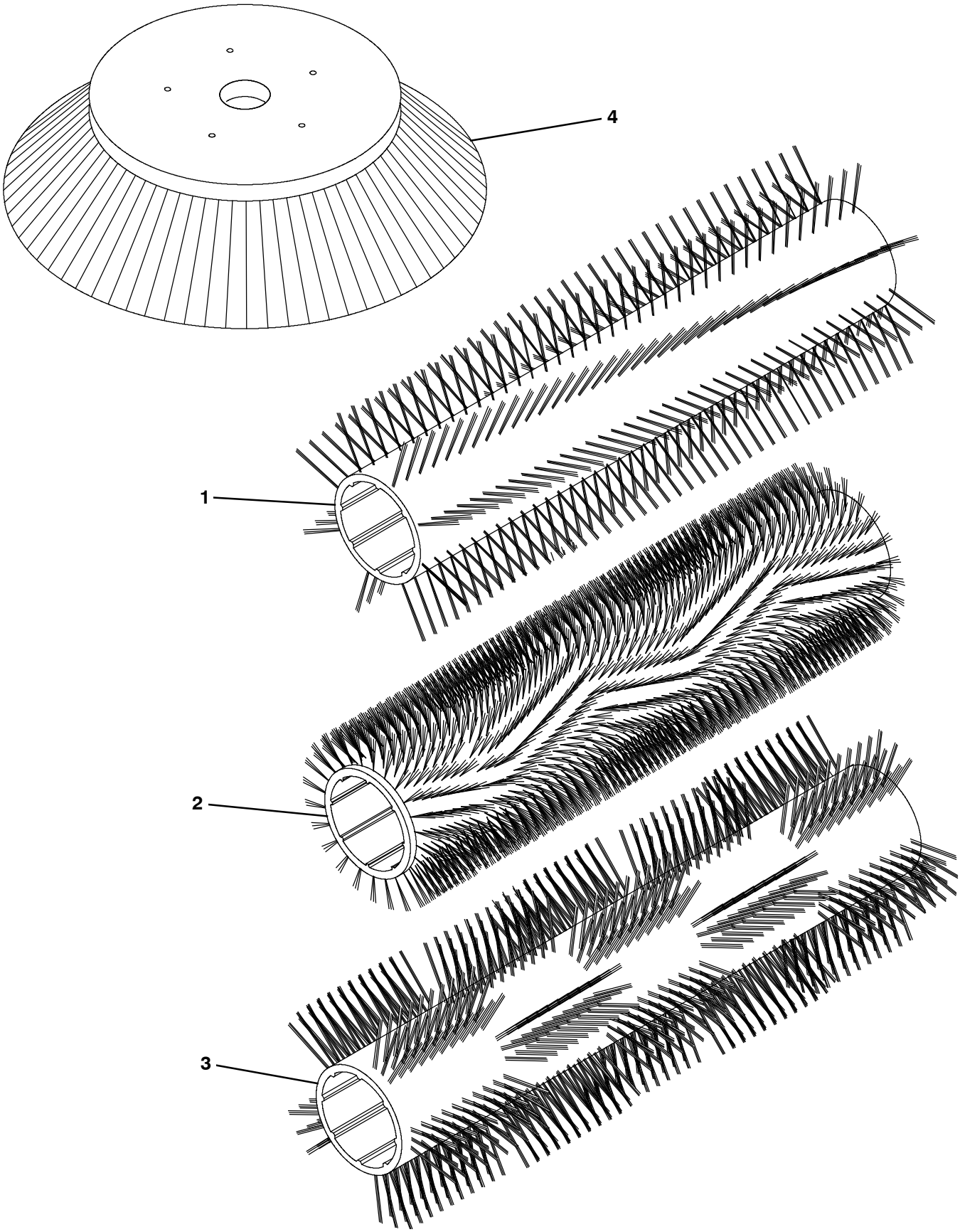

354763

Fig. 1 - Brushes, Replacement

Ref.	Part No.	Serial Number	Description	Qty.
1	54927	(000000–)	Brush, Swp, 45L, 24 Single Row, Natural Fiber & Wire	1
1	54922	(000000–)	Brush, Swp, 45L, 24 Single Row, Nylon	1
1	54923	(000000–)	Brush, Swp, 45L, 8 Double Row, Nylon	1
1	54925	(000000–)	Brush, Swp, 45L, 8 Double Row, Polypropylene & Wire	1
1	59440	(000000–)	Brush, Swp, 45L, 8 Double Row, Wire	1
1	66019	(000000–)	Brush, Swp, 45L, 8 Double Row, Polypropylene	1
1	66018	(000000–)	Brush, Swp, 45L, 5 Double Row Patrol, Nylon	1
2	370008	(000000–)	Brush, Swp, 45L, Sand Wedge, Polypropylene	1
3	370009	(000000–)	Brush, Swp, 45L, Window , Polypropylene	1
4	1027380	(000000–)	Brush, Disk, Swp, 26.0 D, Polypropylene	1
4	1041102	(000000–)	Brush, Disk, Swp, 26.0 D, Nylon	1
4	1042097	(000000–)	Brush, Disk, Swp, 25.4 D, Flat Wire	1

Fig. 2 - Main Frame Group

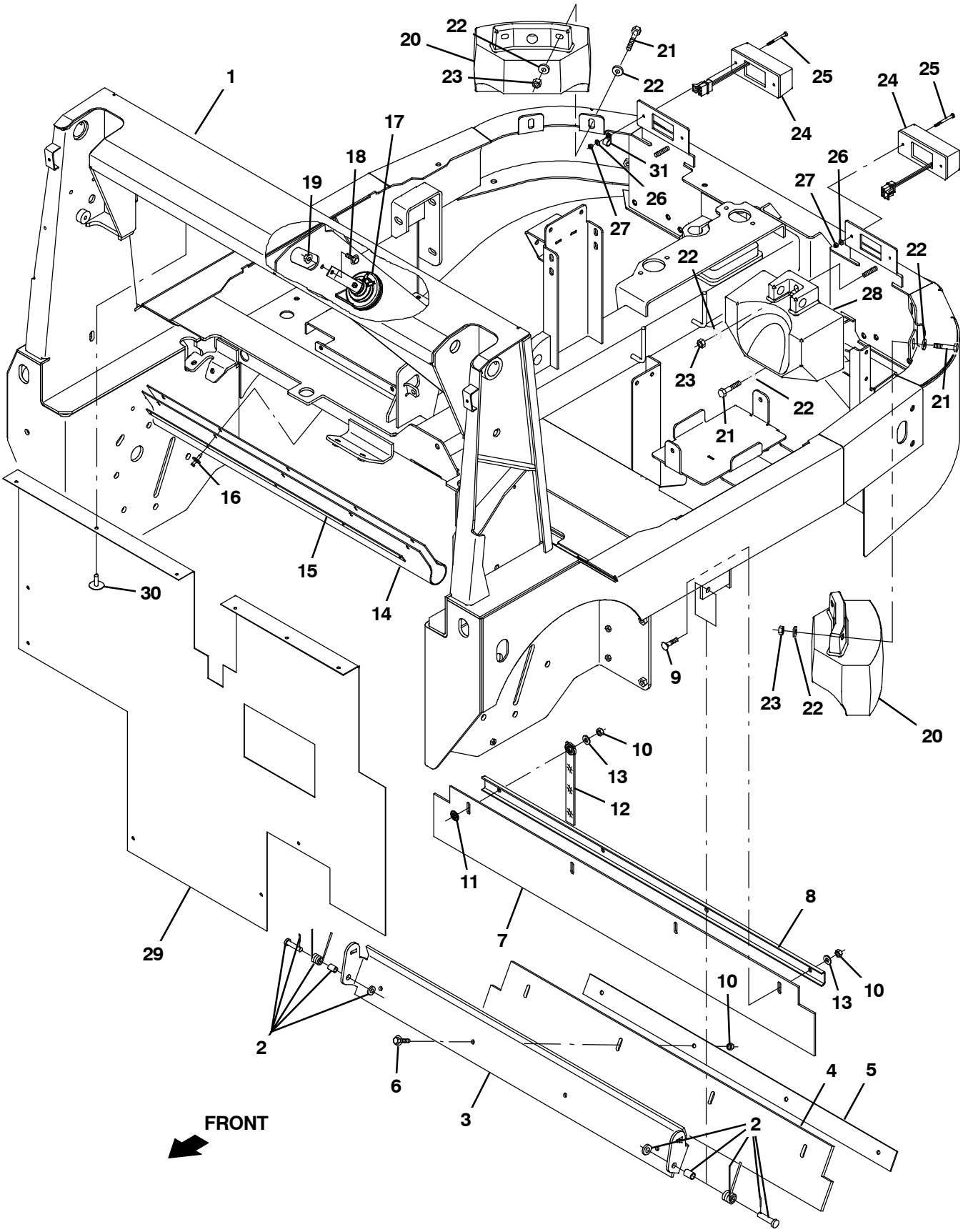

354675

Fig. 2 - Main Frame Group

	Ref.	Part No.	Serial Number	Description	Qty.
	1	1028252	(000000-)	Frame Wldt, Main [S30]	1
	2	69904	(000000-)	Spring Assy Kit	3
	3	54182	(000000-)	Bracket, Flap, Recirculation	1
	4	54190	(000000-)	Skirt, Neo, .37, 06.00w 44.65l, 04/ Sl	1
	5	54184	(000000-)	Retainer, Blade, Deflector	1
	6	1037355	(000000-)	Screw, Hex, M8 X 1.25 X 35, 9.8, Sems	4
	7	9004940	(000000-001312)	Skirt Kit, Side / Rear [S30]	1
	7	1045348	(001313-)	Skirt, Neo, .18, 06.74w 50.00l, 04/ Sl	1
	8	383161	(000000-)	Channel, .12, 1.5w 0.5 44.6l, 3/0.4h	1
	9	69915	(000000-)	Bolt, Carriage, M8 X 1.25 X 40	4
	10	08709	(000000-)	Nut, Hex, Lock, M8 X 1.25, Nl	8
	11	41142	(000000-)	Washer, Lock, Int-Ext, 0.38	1
	12	71579	(000000-)	Strap, Static, W/Grommet, .19 1.1w 25.0l	1
	13	32491	(000000-)	Washer, Flat, 0.31, Std	4
	14	1036913	(000000-)	Skirt, Rbr, .12, 10.66w 43.00l, 10/ Sl	1
	15	1040146	(000000-)	Strip, Backing, Hppr	1
	16	21246	(000000-)	Rivet, Plstc, .325d X 0.79	5
	17	369704	(000000-)	Horn, 12vdc, Dba [Wolo]	1
	18	1037346	(000000-)	Screw, Hex, M8 X 1.25 X 25, 9.8, Sems	1
	19	07791	(000000-)	Nut, Hex, Flng, M8 X 1.25	2
	20	1036819	(000000-)	Weight, Counter, Casting, 79.9 Lb	2
	21	16930	(000000-)	Screw, Hex, M10 X 1.50 X 50, 8.8	5
	22	32493	(000000-)	Washer, Flat, 0.50, Std	10
	23	41430	(000000-)	Nut, Hex, Lock, M10 X 1.5, Nl	5
▽	24	1033578	(000000-)	Taillight, 12vdc, 6.3 X 2.5	2
▲		45780	(000000-)	Lamp, 12vdc, 0.5a, 04cp [#1157]	1
	25	377165	(000000-)	Screw, Pan, Phl, M4 X 0.70 X 60, 4.8	4
	26	19065	(000000-)	Washer, Flat, 08	4
	27	02850	(000000-)	Nut, Hex, Lock, M4 X 0.70, Nl	4
	28	1031503	(000000-)	Weight, Counter, Casting, 72.8lb (S30 and S30XP Only)	1
	29	1045224	(000000-)	Skirt, Rbr	1
	30	72968	(000000-)	Rivet, Plstc, .250d X 0.90	12
	31	26395-2	(000000-)	Clamp, Cable, Stl, 0.38d X 0.38w, 1hole	1

Fig. 3 - Brush Door Group, Right

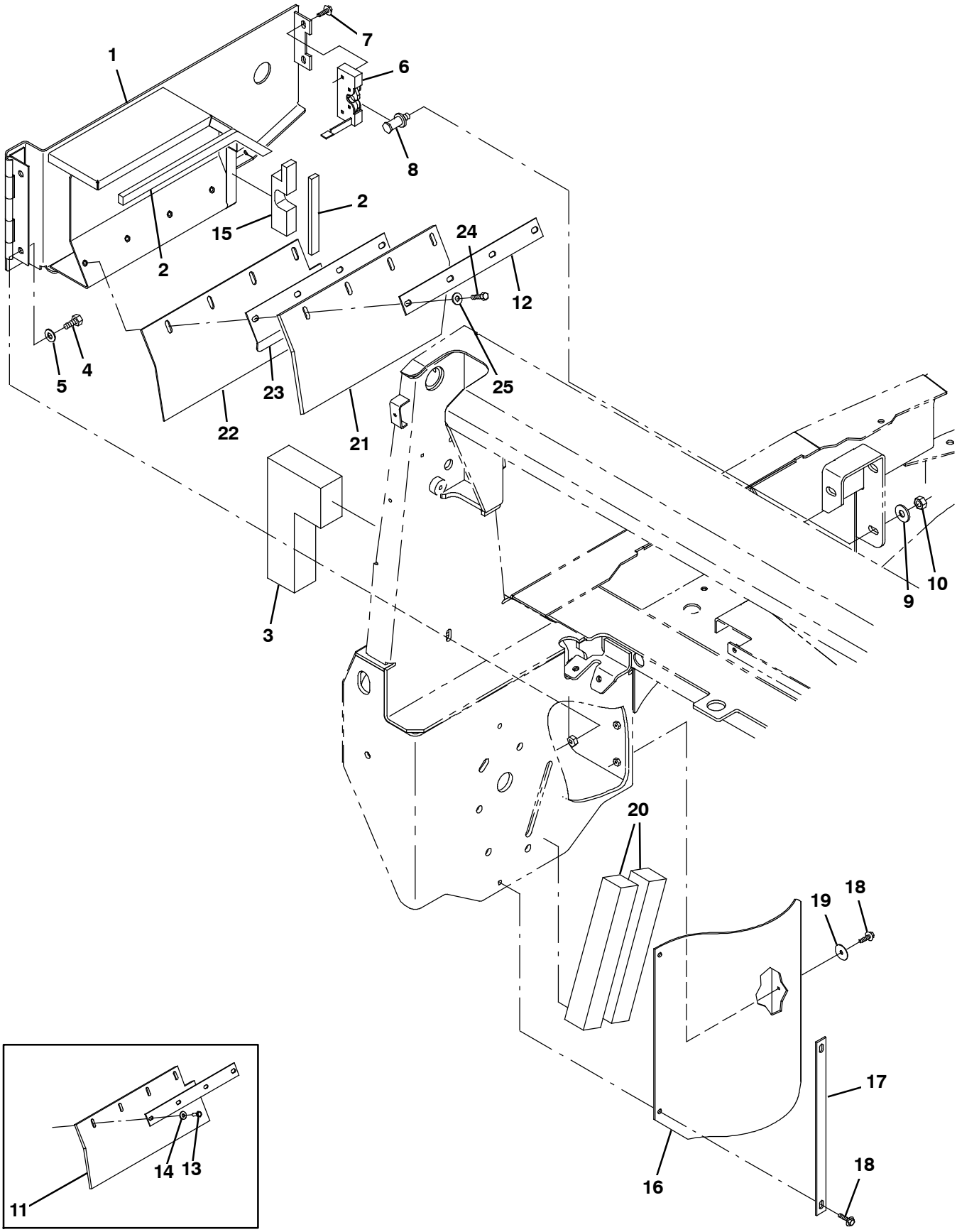

354677

Fig. 3 - Brush Door Group, Right

Ref.	Part No.	Serial Number	Description	Qty.
1	1029580	(000000-)	Door Wldt, Brush, Rh	1
2	1046428	(000000-)	Seal, Afmkt, Rbr, Clsd, Adh, 02ft	2
3	1042812	(000000-)	Seal, Rbr, Clsd, 2.00w 09.8l Rh	1
4	370181	(000000-)	Screw, Hex, M10 X 1.50 X 25, 10.9	2
5	32492	(000000-)	Washer, Flat, 0.38, Std	2
6	59195	(000000-)	Latch, Hook	1
7	1036892	(000000-)	Screw, Hex, M6 X 1.00 X 25, 9.8 Sems	2
8	59192	(000000-)	Latch, Bolt	1
9	41619	(000000-)	Washer, Flat, 0.56b 1.38d .11, Ss	1
10	07788	(000000-)	Nut, Hex, Std, M12 X 1.75, Ss	1
11	9004940	(000000-001312)	Skirt Kit, Side / Rear [S30]	1
12	1039320	(000000-)	Retainer, Skirt, .12, 1.5w X 14.4l, Blk	1
13	09010	(000000-001312)	Screw, Hex, M8 X 1.25 X 25, Ss	4
14	01685	(000000-001312)	Washer, Flat, 0.38b 0.88d .08, Ss	4
15	59537	(000000-)	Seal, Rbr, Clsd, 1.00, Door, Brush, Rh	1
16	1032012	(000000-)	Skirt, Deflector	2
17	1033343	(000000-)	Bracket, Retainer, Seal	2
18	1037345	(000000-)	Screw, Hex, M6 X 1.00 X 30, 9.8, Sems	8
19	41187	(000000-)	Washer, Flat, Belleville, .38	4
20	1042791	(000000-)	Insulation, Acstc, 2.0, 02.0 X 12.0	2
21	1045366	(001313-)	Skirt, Door, Brush	1
22	1045354	(001313-)	Skirt, Door, Brush	1
23	1045352	(001313-)	Bracket, Skirt	1
24	76570	(001313-)	Screw, Hex, M8 X 1.25 X 30, 8.8	4
25	32491	(001313-)	Washer, Flat, 0.31, Std	4

Fig. 4 - Brush Door Group, Left

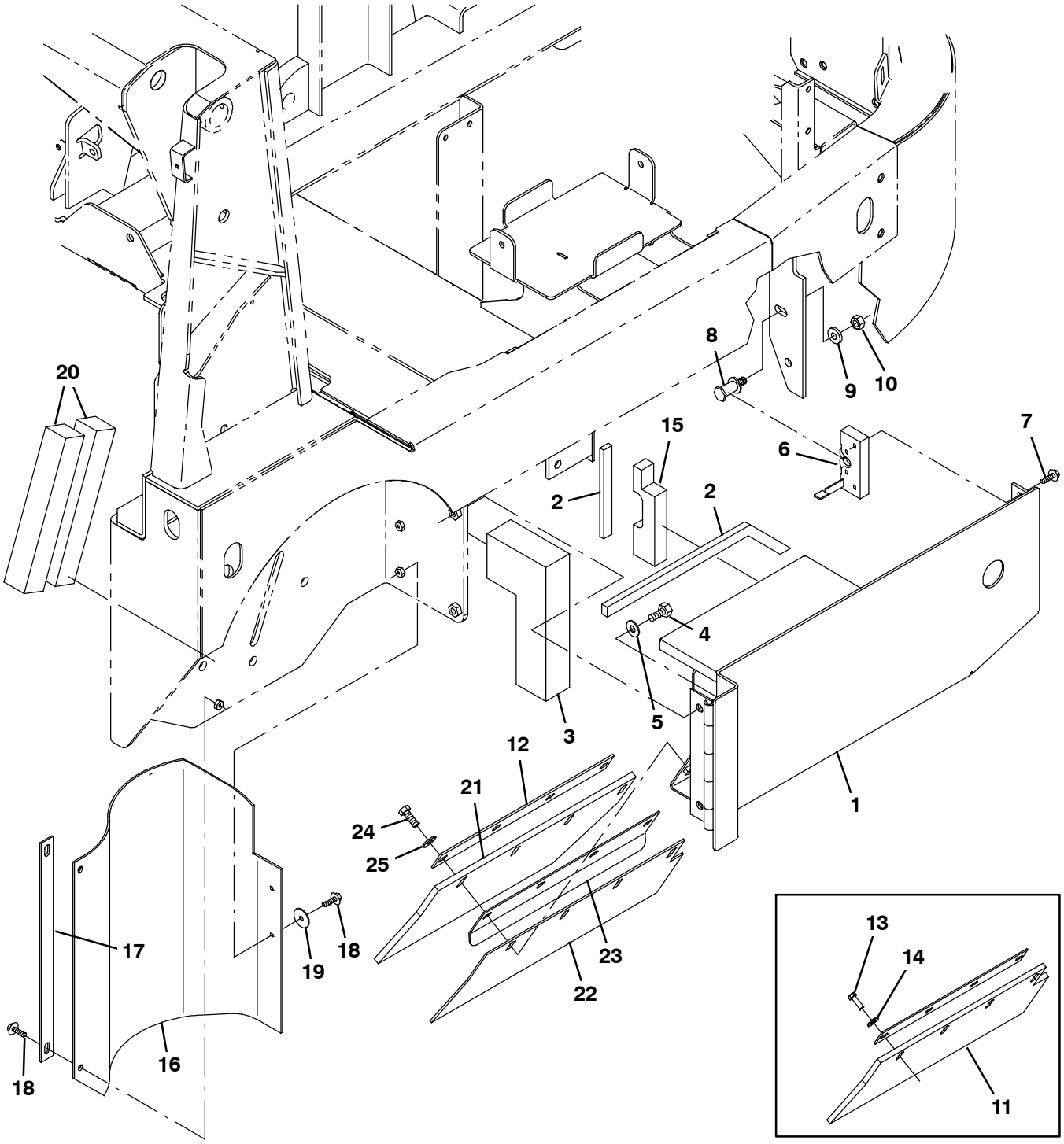

354678

Fig. 4 - Brush Door Group, Left

Ref.	Part No.	Serial Number	Description	Qty.
1	1029801	(000000-)	Door Wldt, Brush, Lh	1
2	1046428	(000000-)	Seal, Afmkt, Rbr, Clsd, Adh, 02ft	2
3	1042829	(000000-)	Seal, Rbr, Clsd, 2.00w 09.8l Lh	1
4	370181	(000000-)	Screw, Hex, M10 X 1.50 X 25, 10.9	2
5	32492	(000000-)	Washer, Flat, 0.38, Std	2
6	59194	(000000-)	Latch, Hook	1
7	1036892	(000000-)	Screw, Hex, M6 X 1.00 X 25, 9.8 Sems	2
8	59192	(000000-)	Latch, Bolt	1
9	41619	(000000-)	Washer, Flat, 0.56b 1.38d .11, Ss	1
10	07788	(000000-)	Nut, Hex, Std, M12 X 1.75, Ss	1
11	9004940	(000000-001312)	Skirt Kit, Side / Rear [S30]	1
12	1039320	(000000-)	Retainer, Skirt, .12, 1.5w X 14.4l, Blk	1
13	09010	(000000-001312)	Screw, Hex, M8 X 1.25 X 25, Ss	4
14	01685	(000000-001312)	Washer, Flat, 0.38b 0.88d .08, Ss	4
15	59538	(000000-)	Seal, Rbr, Clsd, 1.00, Door, Brush, Lh	1
16	1032012	(000000-)	Skirt, Deflector	2
17	1033343	(000000-)	Bracket, Retainer, Seal	2
18	1037345	(000000-)	Screw, Hex, M6 X 1.00 X 30, 9.8, Sems	8
19	41187	(000000-)	Washer, Flat, Belleville, .38	4
20	1042791	(000000-)	Insulation, Acstc, 2.0, 02.0 X 12.0	2
21	1045366	(001313-)	Skirt, Door, Brush	1
22	1045354	(001313-)	Skirt, Door, Brush	1
23	1045352	(001313-)	Bracket, Skirt	1
24	76570	(001313-)	Screw, Hex, M8 X 1.25 X 30, 8.8	4
25	32491	(001313-)	Washer, Flat, 0.31, Std	4

Fig. 5 - Operator Station Group (000000-002099)

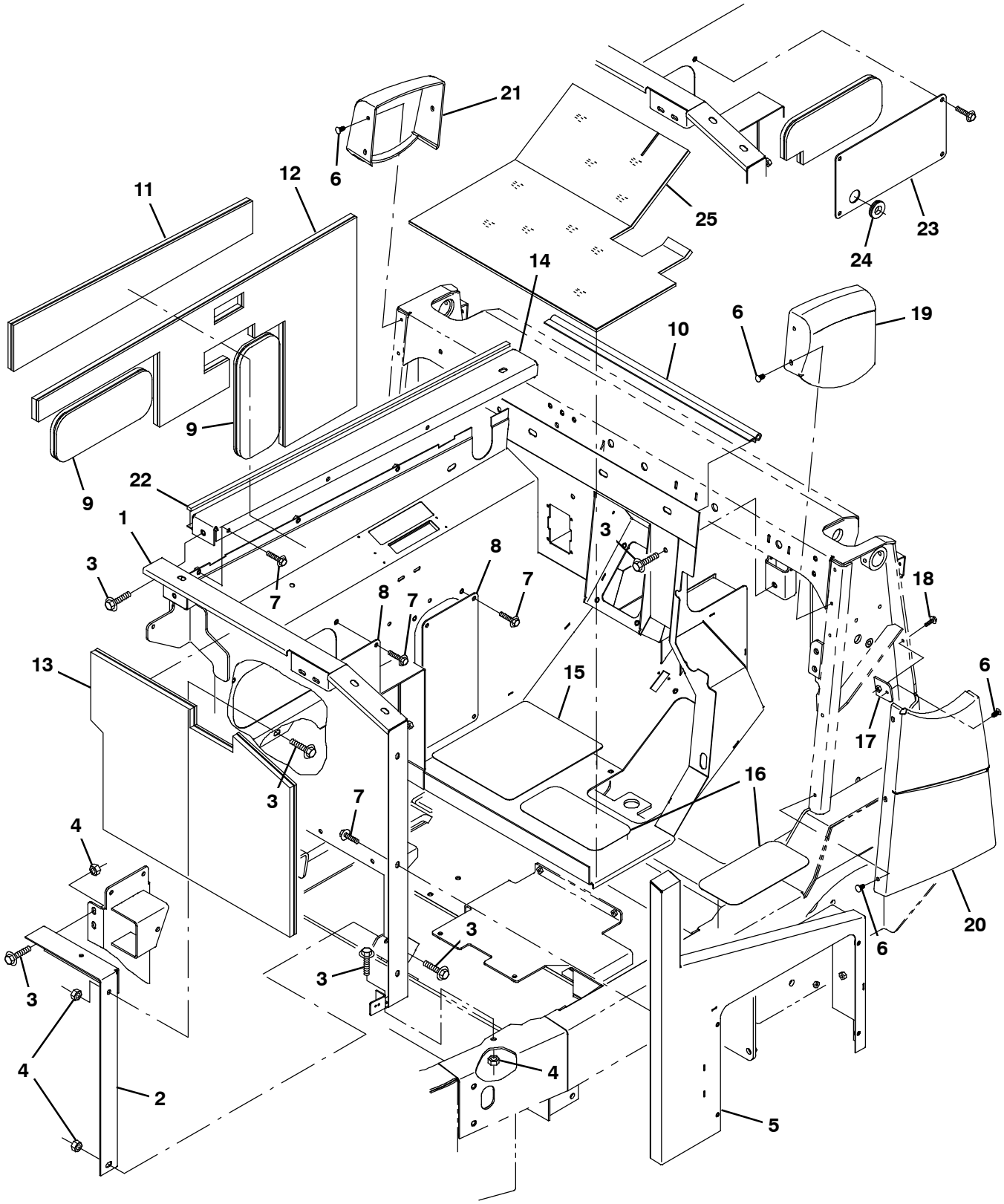

354679

Fig. 5 - Operator Station Group (000000-002099)

Ref.	Part No.	Serial Number	Description	Qty.
1	1033201	(000000-002099)	Shroud Wldt, Station, Oprtr	1
2	1032315	(000000-002099)	Channel	1
3	1037358	(000000-002099)	Screw, Hex, M10 X 1.50 X 35, 9.8, Sems	9
4	07792	(000000-002099)	Nut, Hex, Flng, M10 X 1.50	5
5	1036608	(000000-002099)	Panel Wldt, Side	1
6	21168	(000000-002099)	Clip, .250h, Plstc [Pine-Tree]	10
7	1037346	(000000-002099)	Screw, Hex, M8 X 1.25 X 25, 9.8, Sems	14
8	1028201	(000000-002099)	Panel, Side, Access	2
9	1038806	(000000-002099)	Insulation, Flame-Retardant, 0.75-0.88	2
10	1038959	(000000-002099)	Seal, Trim, Bulb, 90 Degree	1
11	1033288	(000000-002099)	Insulation, Flame-Retardant, 0.75-0.88	1
12	1033287	(000000-002099)	Insulation, Flame-Retardant, 0.75-0.88	1
13	1033286	(000000-002099)	Insulation, Flame-Retardant, 0.75-0.88	1
14	1030587	(000000-002099)	Lip, Station, Oprtr [li]	1
15	86799	(000000-002099)	Tread, Non-Skid, 10.0w 12.0l	1
16	223350	(000000-002099)	Tread, Non-Skid, 04.5w 10.0l	2
17	1034854	(000000-002099)	Plate, Attmnt, Cover	1
18	1036892	(000000-002099)	Screw, Hex, M6 X 1.00 X 25, 9.8 Sems	1
19	1039425	(000000-002099)	Cover, Lntl, Rh	1
20	1030553	(000000-002099)	Cover, Side, Rh	1
21	1030646	(000000-002099)	Cover, Lntl, Lh	1
22	1046426	(000000-002099)	Seal, Afmkt, Rbr, Clsd, Adh, 08ft	1
23	1044691	(000000-002099)	Panel, Side, Access, Ce (CE Only)	1
24	10632-8	(000000-002099)	Grommet, Rbr, 0.75id, F/1.3h, .12 Matl (CE Only)	1
25	1038738	(000000-002099)	Mat, Floor (S30XP Only)	1

Fig. 6 - Operator Station Group (002100-)

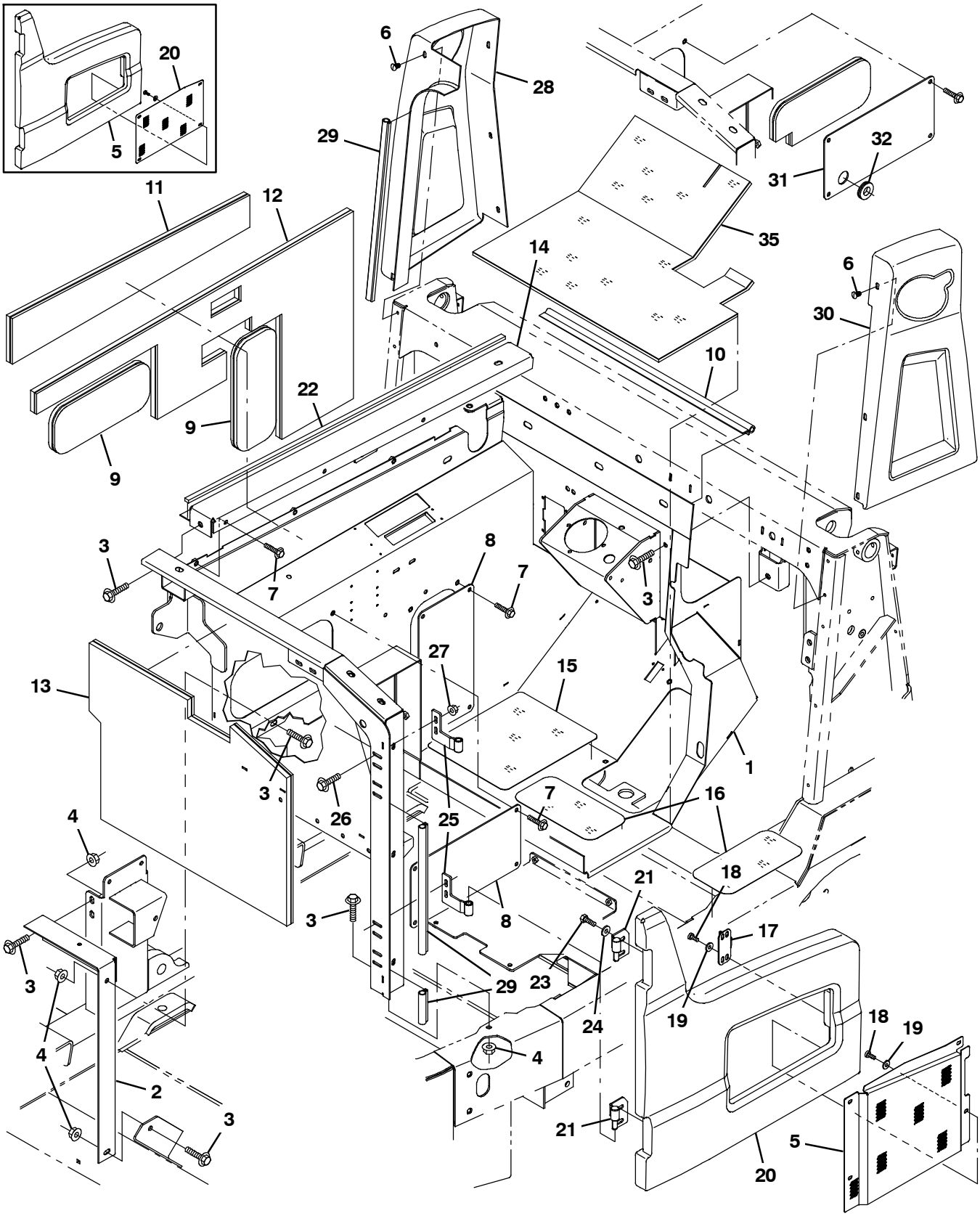

354679

Fig. 6 - Operator Station Group (002100-)

Ref.	Part No.	Serial Number	Description	Qty.
1	1058273	(002100-)	Shroud Wldt, Station, Oprtr	1
2	1032315	(002100-)	Channel	1
3	1037358	(002100-)	Screw, Hex, M10 X 1.50 X 35, 9.8, Sems	9
4	07792	(002100-)	Nut, Hex, Flng, M10 X 1.50	5
5	9007979	(002100-003725)	Cover, Seat, Rotomold, Afmkt [S30]	1
6	21168	(002100-)	Clip, .250h, Plstc [Pine-Tree]	12
7	1037346	(002100-)	Screw, Hex, M8 X 1.25 X 25, 9.8, Sems	14
8	1028201	(002100-)	Panel, Side, Access	2
9	1038806	(002100-)	Insulation, Flame-Retardant, 0.75-0.88	2
10	1038959	(002100-)	Seal, Trim, Bulb, 90 Degree	1
11	1033288	(002100-)	Insulation, Flame-Retardant, 0.75-0.88	1
12	1033287	(002100-)	Insulation, Flame-Retardant, 0.75-0.88	1
13	1033286	(002100-)	Insulation, Flame-Retardant, 0.75-0.88	1
14	1059307	(002100-)	Lip Wldt, Station, Oprtr	1
15	86799	(002100-)	Tread, Non-Skid, 10.0w 12.0l	1
16	223350	(002100-)	Tread, Non-Skid, 04.5w 10.0l	2
17	1026825	(002100-)	Bracket, Latch, Shrd, Seat	1
18	09200	(002100-)	Screw, Pan, Phl, M5 X 0.80 X 12, Ss	6
19	19066	(002100-)	Washer, Flat, 10	6
20	1058108	(002100-003725)	Panel, Shrd, Seat	1
21	1057880	(002100-)	Hinge Wldt, Shrd, Rh	2
22	1046426	(002100-)	Seal, Afmkt, Rbr, Clsd, Adh, 08ft	1
23	16735	(002100-)	Screw, Hex, M8 X 1.25 X 16, 8.8	4
24	32491	(002100-)	Washer, Flat, 0.31, Std	4
25	1057875	(002100-)	Hinge Wldt, Shrd, Rh	2
26	1036892	(002100-)	Screw, Hex, M6 X 1.00 X 25, 9.8, Sems	4
27	07790	(002100-)	Nut, Hex, Flng, M6 X 1.00	4
28	9007977	(002100-)	Cover, Lntl, Lh, Rotomold, Afmkt [S30]	1
29	1030588	(002100-)	Seal, Afmkt, Bulb, 90, 0.75d F/11ga 02ft	2
30	9007978	(002100-)	Cover, Lntl, Rh, Rotomold, Afmkt [S30]	1
31	1044691	(002100-)	Panel, Side, Access, Ce (CE Only)	1
33	1056828	(003726-)	Cover, Seat, Trimmed	1
34	1064528	(003726-)	Panel, Shrd, Seat	1
35	1038738	(002100-)	Mat, Floor (S30XP Only)	1

Fig. 7 - Seat and Shroud Group, Diesel

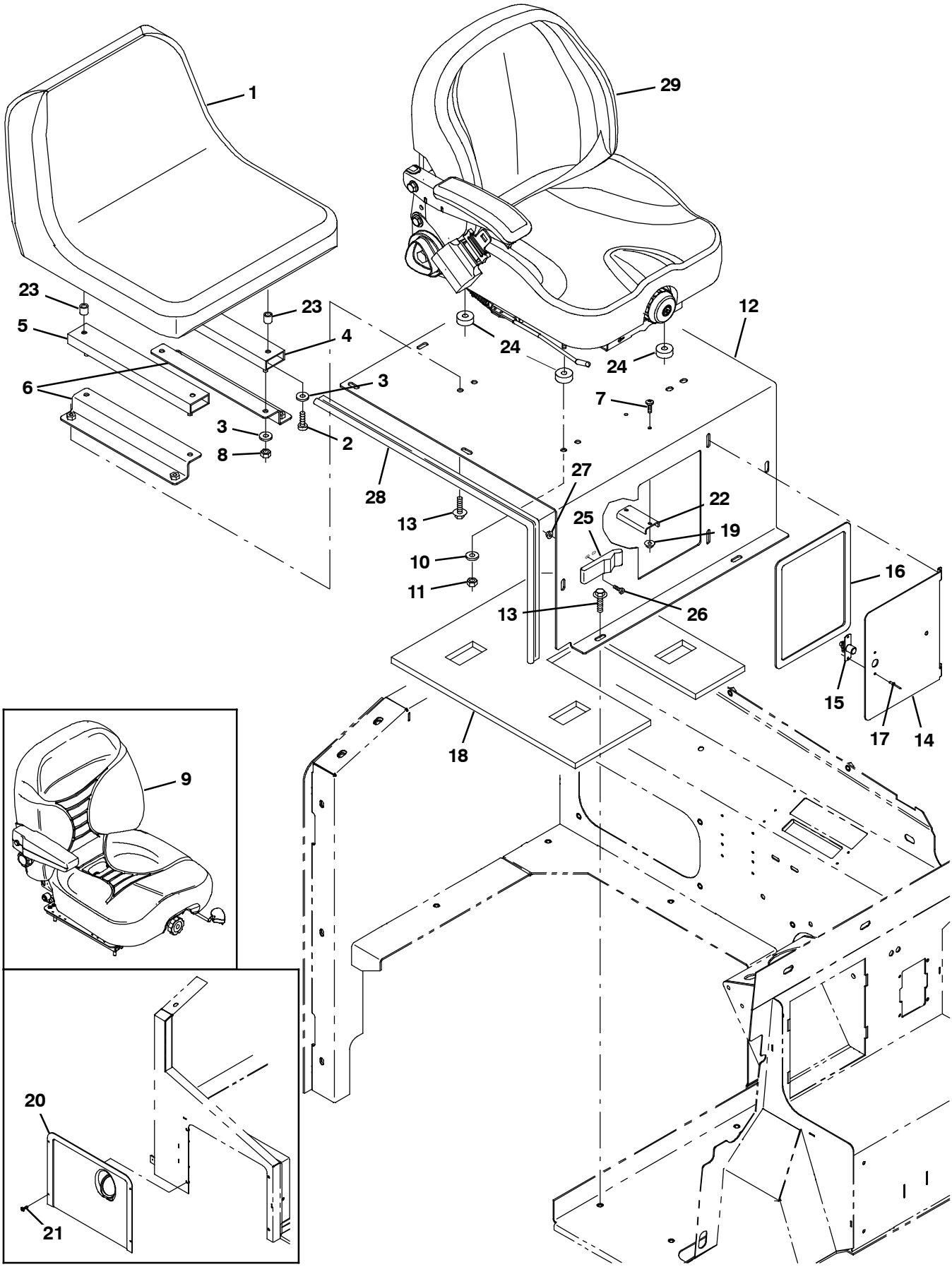

354771

Fig. 7 - Seat and Shroud Group, Diesel

	Ref.	Part No.	Serial Number	Description	Qty.
	1	9005082	(000000-001415)	Seat Kit, Std, Replmt (S30 Only)	1
	1	1048932	(001416-005876)	Seat, Std [Michigan, Model V-2505] (S30 Only)	1
	1	1201894	(005877-)	Seat, Std [Milsco] (S30 Only)	1
	2	25537	(000000-001415)	Screw, Pan, Phl, .31-18 X 0.75, G2	4
	2	49177	(001416-)	Screw, Pan, Phl, .31-18 X 1.00, G2	4
	3	69461	(000000-)	Washer, Flat, 0.38b 0.88d .12, Stl, Pl	12
	4	360369	(000000-)	Track, Slide, Seat Adj, 12.5l	1
	5	360370	(000000-)	Track, Slide, Seat Adj, 12.5l, W/Latch	1
	6	1040363	(000000-)	Bracket, Angle, Mtg, Seat	2
	7	06933	(000000-)	Screw, Pan, Phl, M5 X 0.80 X 16, 4.8	2
	8	32983	(000000-)	Nut, Hex, Lock, .31-18, Nl	4
▽	9	1022105	(000000-006197)	Seat, Suspension, W/1 Arm & Seatbelt (S30XP Only)	1
▲		1066893	(000000-006197)	Seatbelt, Retractable [Deluxe Seat]	1
▲		1072815	(000000-006197)	Armrest, Rh	1
▲		1048955	(000000-006197)	Switch, Seat, No [Delta 6440-04]	1
	10	32491	(000000-)	Washer, Flat, 0.31, Std (S30XP Only)	4
	11	32983	(000000-)	Nut, Hex, Lock, .31-18, Nl (S30XP Only)	4
	12	1036502	(000000-)	Panel, Seat	1
	13	1037346	(000000-)	Screw, Hex, M8 X 1.25 X 25, 9.8, Sems	13
	14	1036489	(000000-)	Door, Access	1
	15	140962	(000000-)	Latch, Cmpr, Spring, Knurled Knob, Pl	1
	16	1036500	(000000-)	Gasket, Rbr, .13, 07.87w 09.84l, Adh	1
	17	87316	(000000-)	Rivet, Blind, .125d X 0.32 X .25d, Alm	2
	18	1033291	(000000-)	Insulation, Flame-Retardant, 1.00	1
	19	07789	(000000-)	Nut, Hex, Flng, M5 X 0.80	2
	20	9004526	(000000-002099)	Cover, Dsl, W/ Label, Replmt	1
	21	1045525	(000000-002099)	Screw, Pan, Phl, M6 X 1.00 X 12, Blk	4
	22	63378	(000000-)	Magnet, Drive Brush	1
	23	1051052	(001416-)	Spacer, Rnd, .38b .88d .38l	4
	24	1048261	(000000-)	Spacer, 0.32d, 1.00d, 0.38l, Pl (CE Only)	4
	25	49800	(002100-)	Latch	1
	26	06928	(002100-)	Screw, Pan, Phl, M4 X 0.70 X 20, 4.8	2
	27	02850	(002100-)	Nut, Hex, Lock, M4 X 0.70, Nl	2
	28	1031625	(002100-)	Seal, Afmkt, Bulb, Str, .50d F/11ga 03ft	1
	29	1073641	(006198-)	Seat, Deluxe [S30] (S30XP Only) (See Breakdowns)	1

Fig. 8 - Engine Cover Group, Rear (000000-002099)

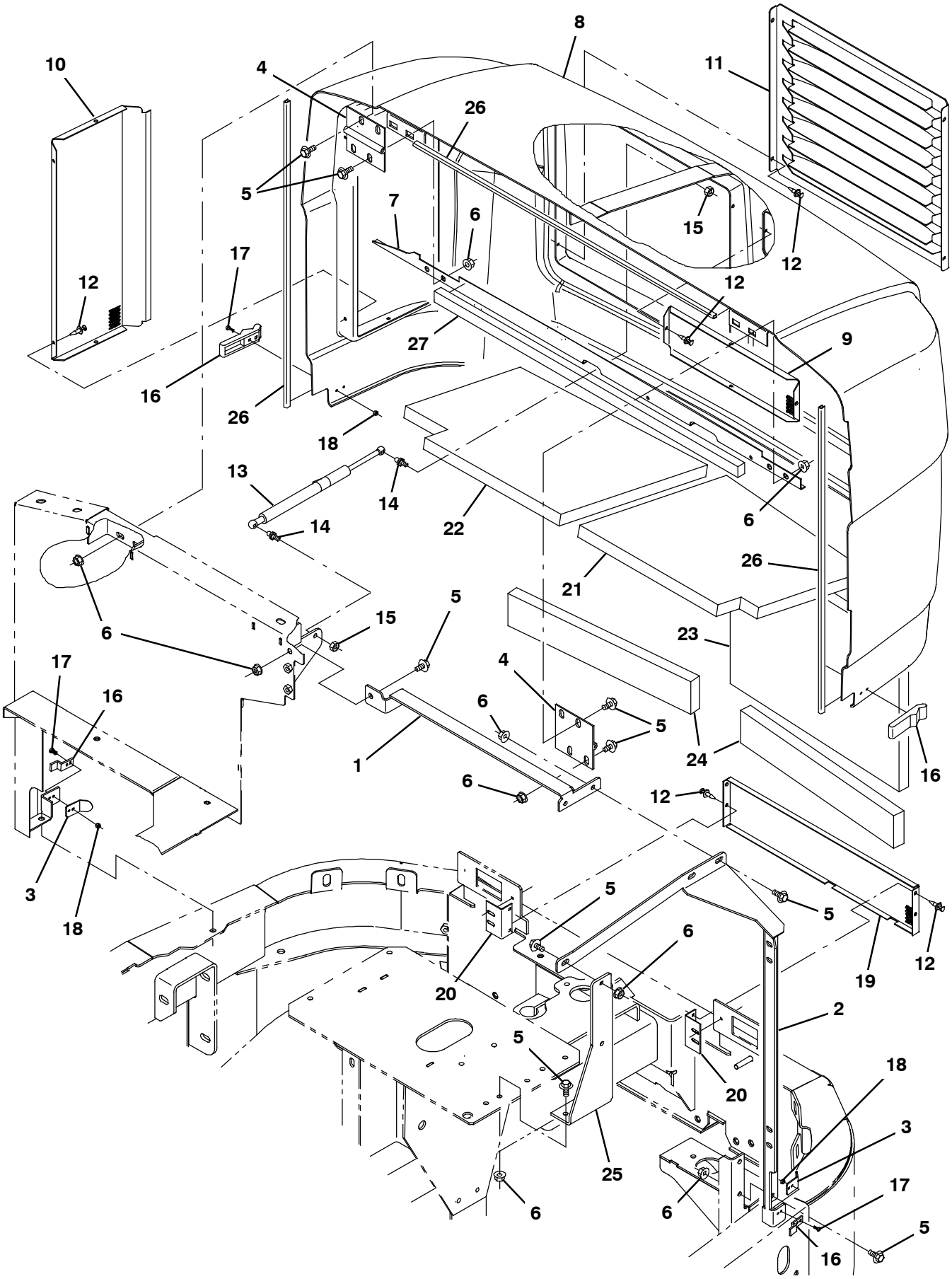

354681

Fig. 8 - Engine Cover Group, Rear (000000-002099)

Ref.	Part No.	Serial Number	Description	Qty.
1	1043760	(000000-002099)	Angle, Sppt Wldt, Hinge	1
2	1043762	(000000-002003)	Brace Wldt	1
2	1054842	(002004-002099)	Brace Wldt, Sppt [Gm 2010]	1
3	1034864	(000000-002099)	Angle, Guide	2
4	1032147	(000000-002099)	Hinge, .25pin .12 4.0w 04.0l, 4/.44sl	2
5	1037346	(000000-002099)	Screw, Hex, M8 X 1.25 X 25, 9.8, Sems	14
6	07791	(000000-002099)	Nut, Hex, Flng, M8 X 1.25	14
7	1034358	(000000-002099)	Strip, Seal	1
8	1033607	(000000-002099)	Cover Assy, Rear	1
9	1034254	(000000-002099)	Grill, Eng	1
10	1032894	(000000-002099)	Grill, Cooler, Oil	1
11	1043996	(000000-002099)	Grill, Rear	1
12	1040816	(000000-002099)	Rivet, Plstc, .250d X 0.90	16
13	1036513	(000000-002099)	Gasspring, 072lb, 06.2strk	1
14	58494	(000000-002099)	Stud, Ball, .39d .31-16, Gasspring	2
15	01760	(000000-002099)	Nut, Hex, Lock, .31-18, Nl, Thin	2
16	49800	(000000-002099)	Latch	2
17	06927	(000000-002099)	Screw, Pan, Phl, M4 X 0.70 X 16, 4.8	8
18	02850	(000000-002099)	Nut, Hex, Lock, M4 X 0.70, Nl	8
19	1032962	(000000-002099)	Grill	1
20	1034378	(000000-002099)	Bracket, Grill	2
21	1035807	(000000-002099)	Insulation, Flame-Retardant, 1.00	1
22	1035808	(000000-002099)	Insulation, Flame-Retardant, 1.00	1
23	1035809	(000000-002099)	Insulation, Flame-Retardant, 1.00	1
24	1035810	(000000-002099)	Insulation, Flame-Retardant, 1.00	2
25	1043751	(000000-002099)	Bracket, Mtg, Air-Clnr	1
26	1046406	(000000-002099)	Molding, Afmkt, Trim, Pvc, .18 .31, 08ft	3
27	1046413	(000000-002099)	Seal, Afmkt, Rbr, Open, Adh, 03ft	1

Fig. 9 - Engine Cover Group, Rear (002100-)

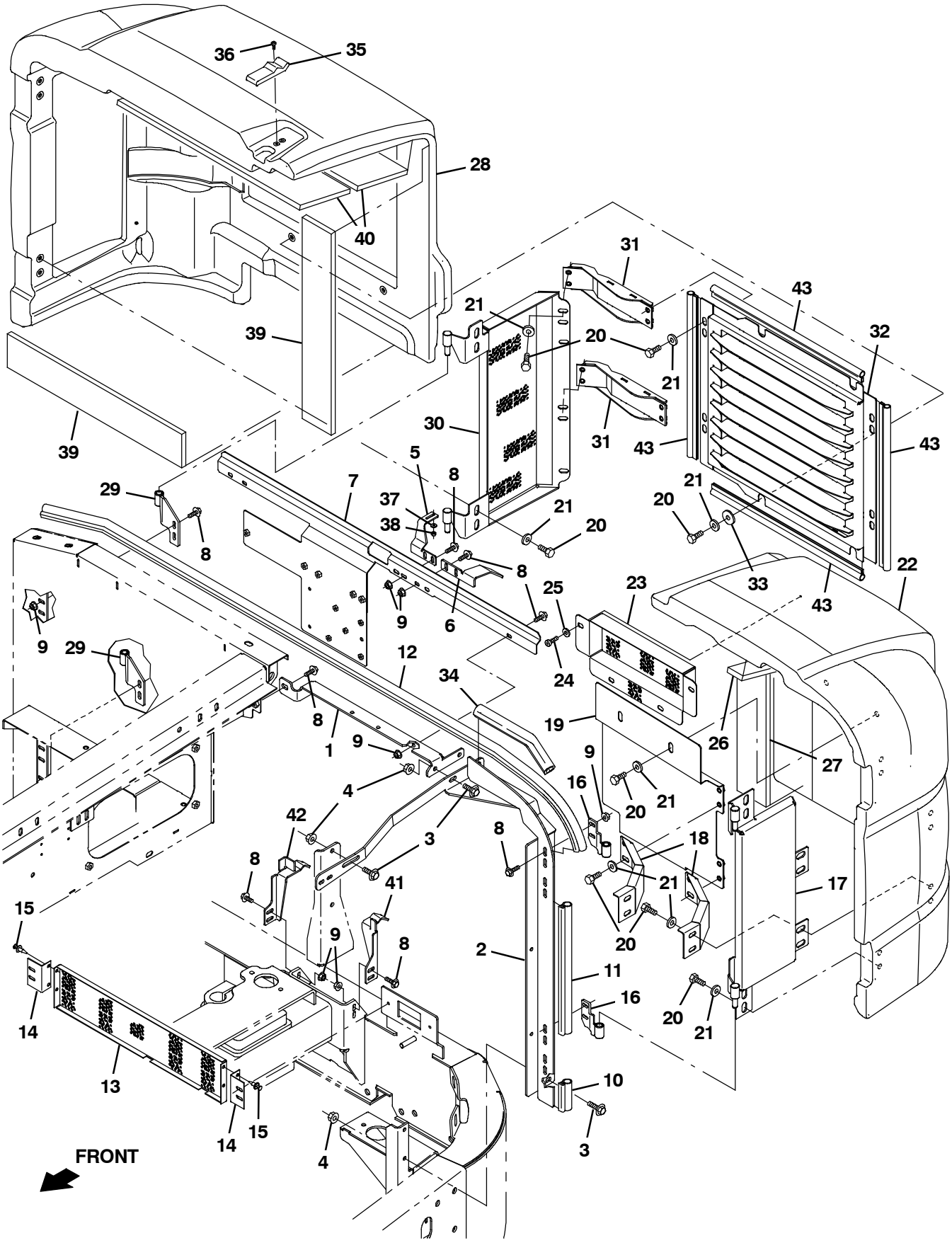

354681

Fig. 9 - Engine Cover Group, Rear (002100-)

Ref.	Part No.	Serial Number	Description	Qty.
1	1057778	(002100-)	Bracket, Sppt, Cover, Rear, Lh	1
2	1057776	(002100-)	Brace Wldt, Sppt	1
3	1037346	(002100-)	Screw, Hex, M8 X 1.25 X 25, 9.8, Sems	5
4	07791	(002100-)	Nut, Hex, Flng, M8 X 1.25	5
5	1060449	(002100-)	Bracket, Latch, Shrd	1
6	1059479	(002100-)	Bracket, Sppt, Shrd, Rear, Upper, Lh	1
7	1057786	(002100-)	Bracket, Sppt, Rear, Shrd	1
8	1036892	(002100-)	Screw, Hex, M6 X 1.00 X 25, 9.8, Sems	20
9	07790	(002100-)	Nut, Hex, Flng, M6 X 1.00	9
10	1030585	(002100-)	Seal, Afmkt, Bulb, 90, 0.75d F/11ga 01ft	1
11	1030588	(002100-)	Seal, Afmkt, Bulb, 90, 0.75d F/11ga 02ft	1
12	1030593	(002100-)	Seal, Afmkt, Bulb, 90, 0.75d F/11ga 08ft	1
13	1032962	(002100-)	Grill	1
14	1034378	(002100-)	Bracket, Grill	2
15	1040816	(002100-)	Rivet, Plstc, .250d X 0.90	4
16	1059874	(002100-)	Hinge Wldt, Shrd, Lh	2
17	1059996	(002100-)	Panel Wldt, Heat, Shield, Lh	1
18	1059211	(002100-)	Bracket, Sppt, Cover, Rear, Lh	2
19	1061000	(002100-)	Panel, Heat, Shield, Rear, Lh	1
20	16735	(002100-)	Screw, Hex, M8 X 1.25 X 16, 8.8	31
21	32491	(002100-)	Washer, Flat, 0.31, Std	21
22	9007974	(002100-)	Cover, Rear, Lh, Rotomold, Afmkt [S30]	1
23	1059440	(002100-)	Panel, Shrd, Eng	1
24	360973	(002100-)	Screw, Pan, 12-16 X 0.50, F/ Plstc	4
25	19066	(002100-)	Washer, Flat, 10	4
26	1061147	(002100-)	Insulation, Acstc, 0.5, 11.5 X 14.5 Adh	1
27	1061145	(002100-)	Insulation, Acstc, 0.5, 03.0 X 23.0 Adh	1
28	9007975	(002100-)	Cover, Rear, Rh, Rotomold, Afmkt [S30]	1
29	1060639	(002100-)	Hinge Wldt, Shrd, Rh	2
30	1059520	(002100-)	Grill Wldt, Screen, Rear, Rh	1
31	1059516	(002100-)	Bracket Wldt, Sppt, Cover, Rear, Rh	2
32	1059481	(002100-)	Grill Wldt, Rear, Rh	1
33	30013	(002100-)	Washer, Flat, 0.31, Fendr	4
34	1015274	(002100-)	Seal, Afmkt, Bulb, Str, 0.76, 0.93w 01ft	1
35	49800	(002100-)	Latch	1
36	06927	(002100-)	Screw, Pan, Phl, M4 X 0.70 X 16, 4.8	4
37	19064	(002100-)	Washer, Flat, 0.16b 0.38d .05, Pl, 06	2
38	02850	(002100-)	Nut, Hex, Lock, M4 X 0.70, Nl	2
39	1061145	(002100-)	Insulation, Acstc, 0.5, 03.0 X 23.0 Adh	2
40	1061146	(002100-)	Insulation, Acstc, 0.5, 05.5 X 23.0 Adh	2
41	1059477	(002100-)	Bracket, Sppt, Shrd, Rear, Lower, Lh	1
42	1059478	(002100-)	Bracket, Sppt, Shrd, Rear, Lower, Rh	1
43	1031623	(002100-)	Seal, Afmkt, Bulb, Str, .50d F/11ga 02ft	4

Fig. 10 - Engine Cover Group, Top (000000-002099)

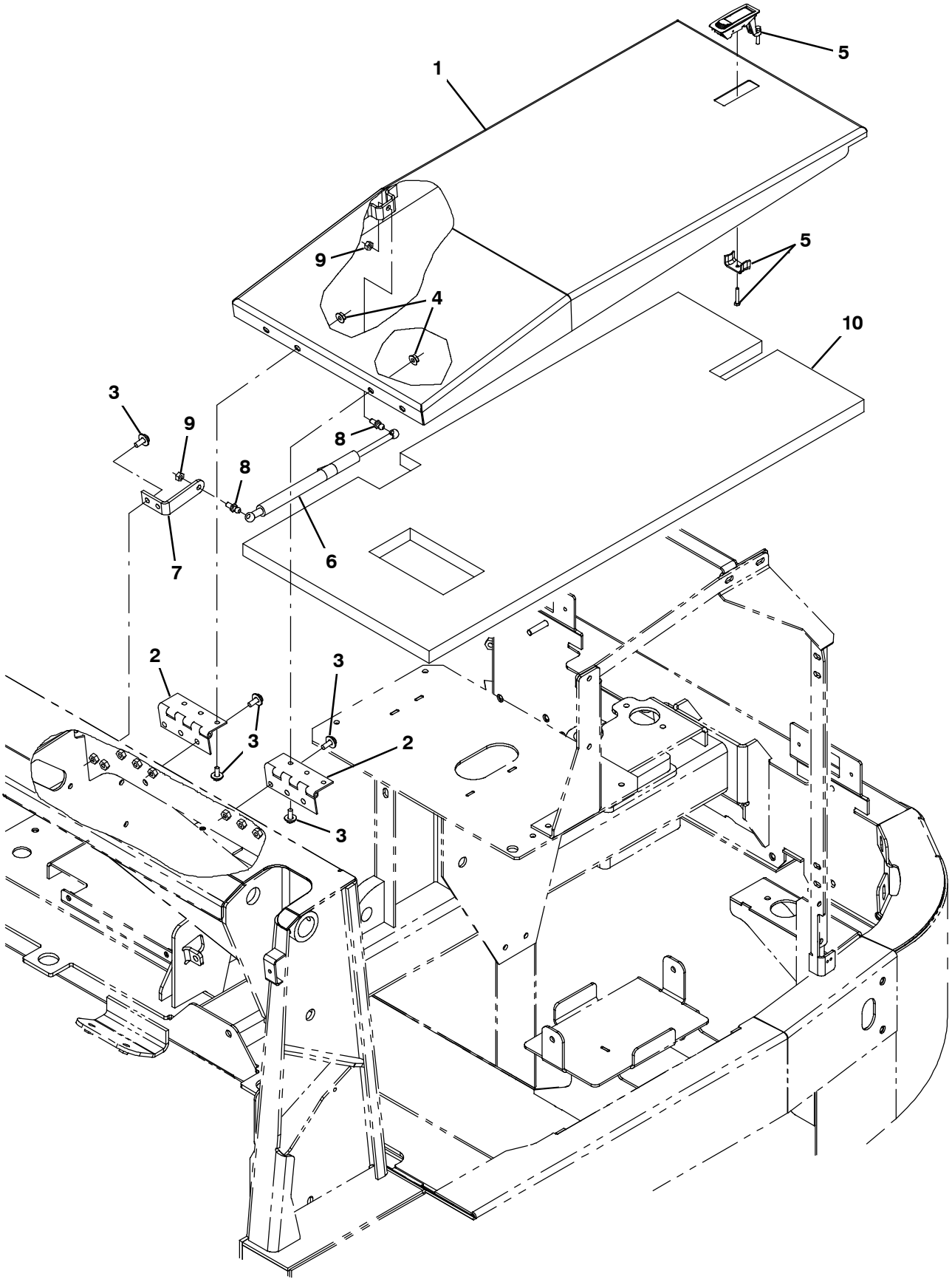

354682

Fig. 10 - Engine Cover Group, Top (000000-002099)

Ref.	Part No.	Serial Number	Description	Qty.
1	1032416	(000000-002099)	Cover Wldt, Top	1
2	74040	(000000-002099)	Hinge	2
3	1037346	(000000-002099)	Screw, Hex, M8 X 1.25 X 25, 9.8, Sems	10
4	07791	(000000-002099)	Nut, Hex, Flng, M8 X 1.25	4
5	398806	(000000-002099)	Latch	1
6	1036513	(000000-002099)	Gasspring, 072lb, 06.2strk	1
7	1032193	(000000-002099)	Angle, Mtg, Stl, .19 2.3 3.7 01.0l 3hole	1
8	58494	(000000-002099)	Stud, Ball, .39d .31-16, Gasspring	2
9	01760	(000000-002099)	Nut, Hex, Lock, .31-18, Nl, Thin	2
10	1035811	(000000-002099)	Insulation, Flame-Retardant, 1.0	1

Fig. 11 - Engine Cover Group, Top (002100-)

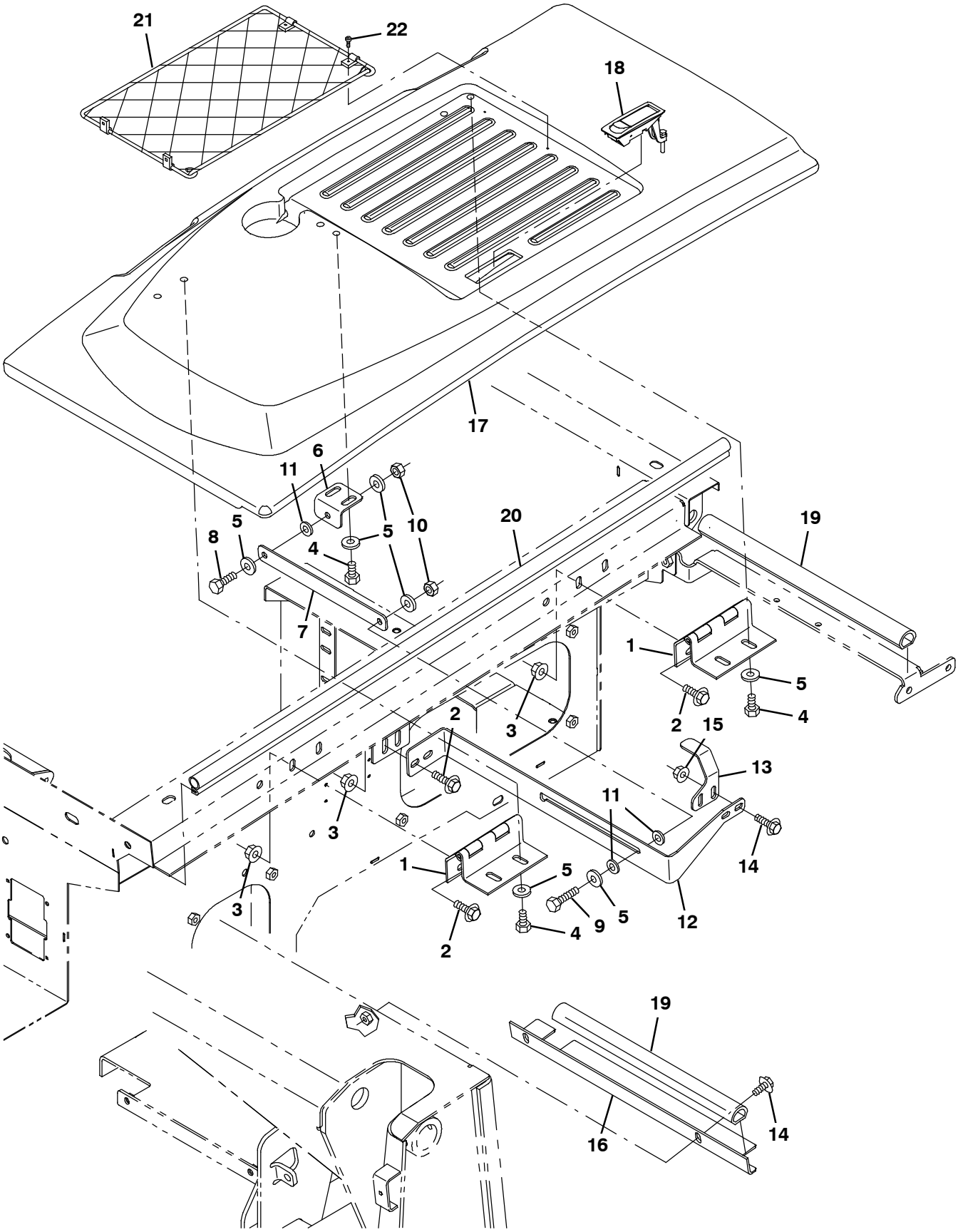

354682

Fig. 11 - Engine Cover Group, Top (002100-)

Ref.	Part No.	Serial Number	Description	Qty.
1	1057961	(002100-)	Hinge, .25pin .12, Cover, Top	2
2	1037346	(002100-)	Screw, Hex, M8 X 1.25 X 25, 9.8, Sems	6
3	07791	(002100-)	Nut, Hex, Flng, M8 X 1.25	6
4	16735	(002100-)	Screw, Hex, M8 X 1.25 X 16, 8.8	6
5	32491	(002100-)	Washer, Flat, 0.31, Std	10
6	1059285	(002100-)	Bracket, Prop, Rod, Cover	1
7	1059286	(002100-)	Plate, Prop, Rod	1
8	39277	(002100-)	Screw, Hex, M8 X 1.25 X 25, 8.8	1
9	06955	(002100-)	Screw, Hex, M8 X 1.25 X 35, 8.8	1
10	08709	(002100-)	Nut, Hex, Lock, M8 X 1.25, Nl	2
11	43611	(002100-)	Washer, Flat, 0.39b 0.75d .06, Nyl	3
12	1059276	(002100-)	Bracket, Sppt, Prop, Rod	1
13	1059291	(002100-)	Bracket, Latch, Cover, Top	1
14	1036892	(002100-)	Screw, Hex, M6 X 1.00 X 25, 9.8, Sems	4
15	07790	(002100-)	Nut, Hex, Flng, M6 X 1.00	2
16	1059269	(002100-)	Bracket, Angle, Lintel	1
17	9007976	(002100-)	Cover, Top, Rotomold, Afmkt [S30]	1
18	398806	(002100-)	Latch	1
19	1015273	(002100-)	Seal, Afmkt, Bulb, Str, 0.76, 0.93w 02ft	2
20	1030593	(002100-)	Seal, Afmkt, Bulb, 90, 0.75d F/11ga 08ft	1
21	CD001	(002100-)	Glovenet-525 Document Rack/Net 60200104-	1
22	1053318	(002100-)	Screw, Pan, Phl, 08-16 X 1.00, F/ Plstc	4

Fig. 12 - Engine Cover Group, Side (000000-002099)

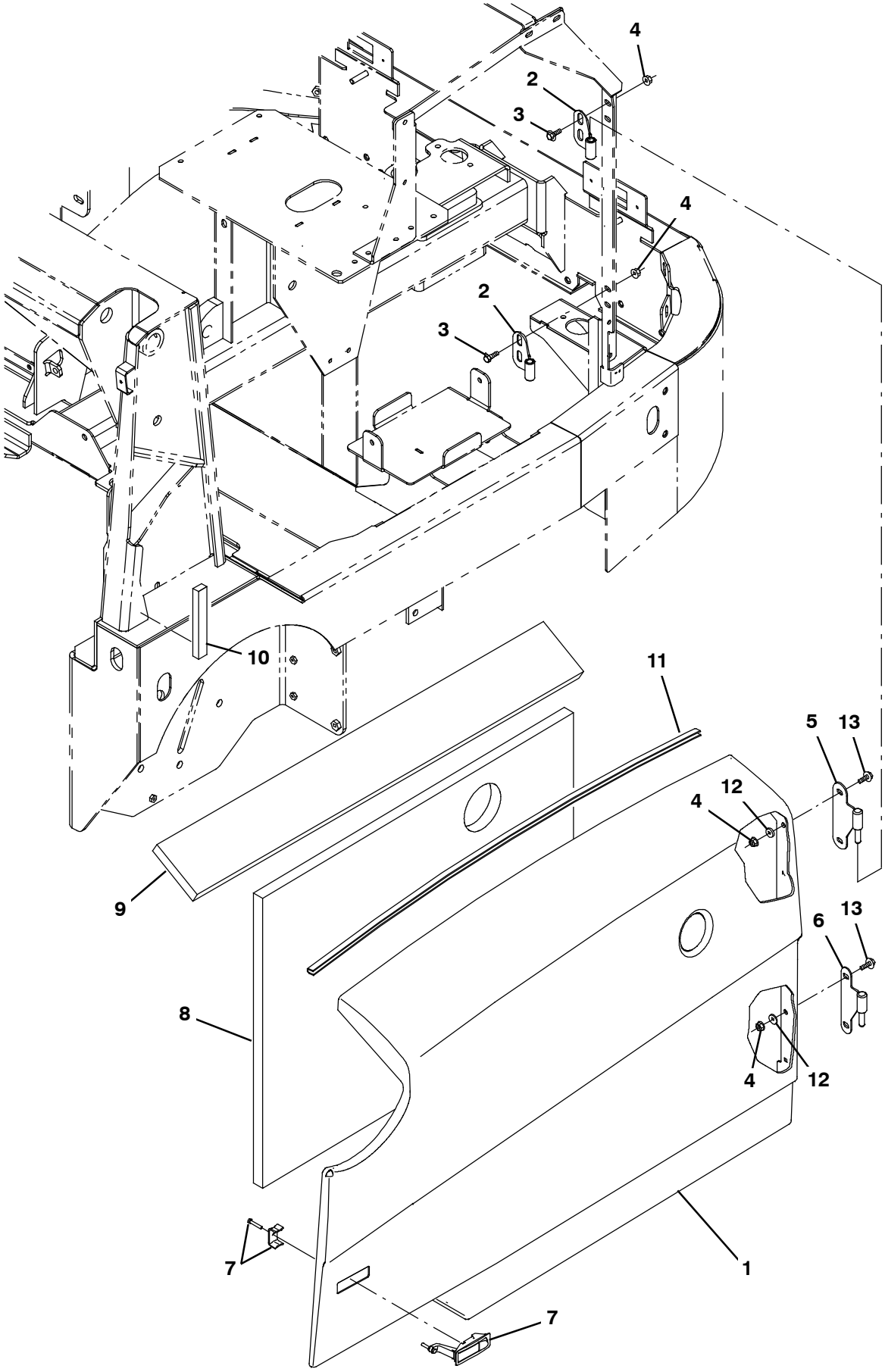

354683

Fig. 12 - Engine Cover Group, Side (000000-002099)

Ref.	Part No.	Serial Number	Description	Qty.
1	1029183	(000000-002099)	Cover, Side, Lh	1
2	1025196	(000000-002099)	Hinge Wldt, Shrd, Lh	2
3	1037346	(000000-002099)	Screw, Hex, M8 X 1.25 X 25, 9.8, Sems	4
4	07791	(000000-002099)	Nut, Hex, Flng, M8 X 1.25	8
5	1031641	(000000-002099)	Hinge Wldt, Shrd, Lh	1
6	1040707	(000000-002099)	Hinge Wldt, Shrd, Lower Lh	1
7	398806	(000000-002099)	Latch	1
8	1035812	(000000-002099)	Insulation, Flame-Retardant, 1.00	1
9	1035815	(000000-002099)	Insulation, Flame-Retardant, 1.00	1
10	1046418	(000000-002099)	Seal, Afmkt, Rbr, Open, Adh, 01ft	1
11	1046406	(000000-002099)	Molding, Afmkt, Trim, Pvc, .18 .31, 08ft	1
12	32491	(000000-002099)	Washer, Flat, 0.31, Std	4
13	1037354	(000000-002099)	Screw, Hex, M8 X 1.25 X 30, 9.8, Sems	4

Fig. 13 - Engine Cover Group, Side (002100-)

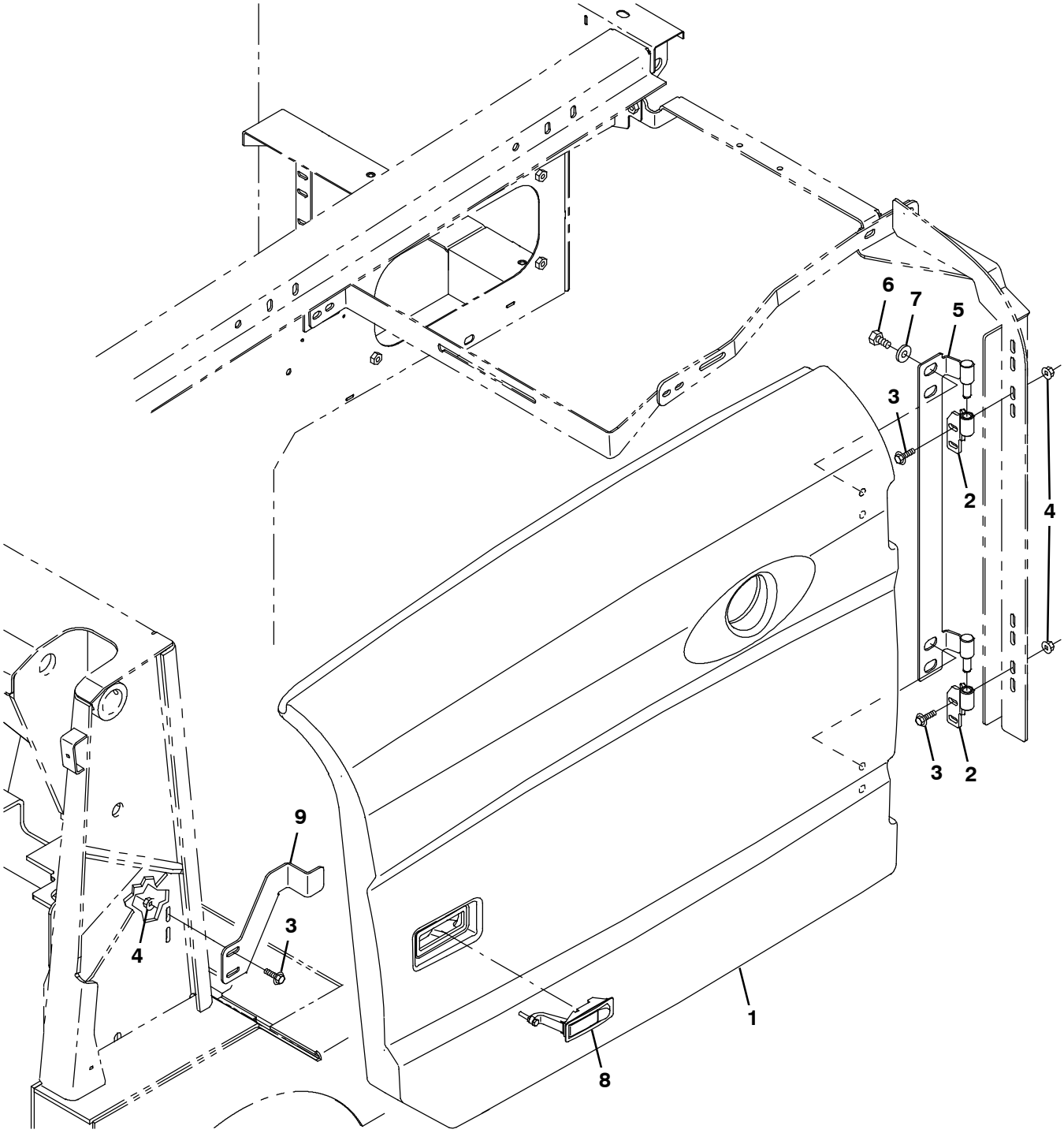

354683

Fig. 13 - Engine Cover Group, Side (002100-)

Ref.	Part No.	Serial Number	Description	Qty.
1	9007973	(002100-)	Cover, Side, Rotomold, Afmkt [S30]	1
2	1059874	(002100-)	Hinge Wldt, Shrd, Lh	2
3	1036892	(002100-)	Screw, Hex, M6 X 1.00 X 25, 9.8, Sems	6
4	07790	(002100-)	Nut, Hex, Flng, M6 X 1.00	6
5	1059868	(002100-)	Hinge Wldt, Shrd, Side, Lh	1
6	16735	(002100-)	Screw, Hex, M8 X 1.25 X 16, 8.8	4
7	1017218	(002100-)	Washer, Flat, 0.32b 1.00d .12, Ss	4
8	398806	(002100-)	Latch	1
9	1059221	(002100-)	Bracket, Latch, Side, Door	1

Fig. 14 - Instrument Panel Group, S30

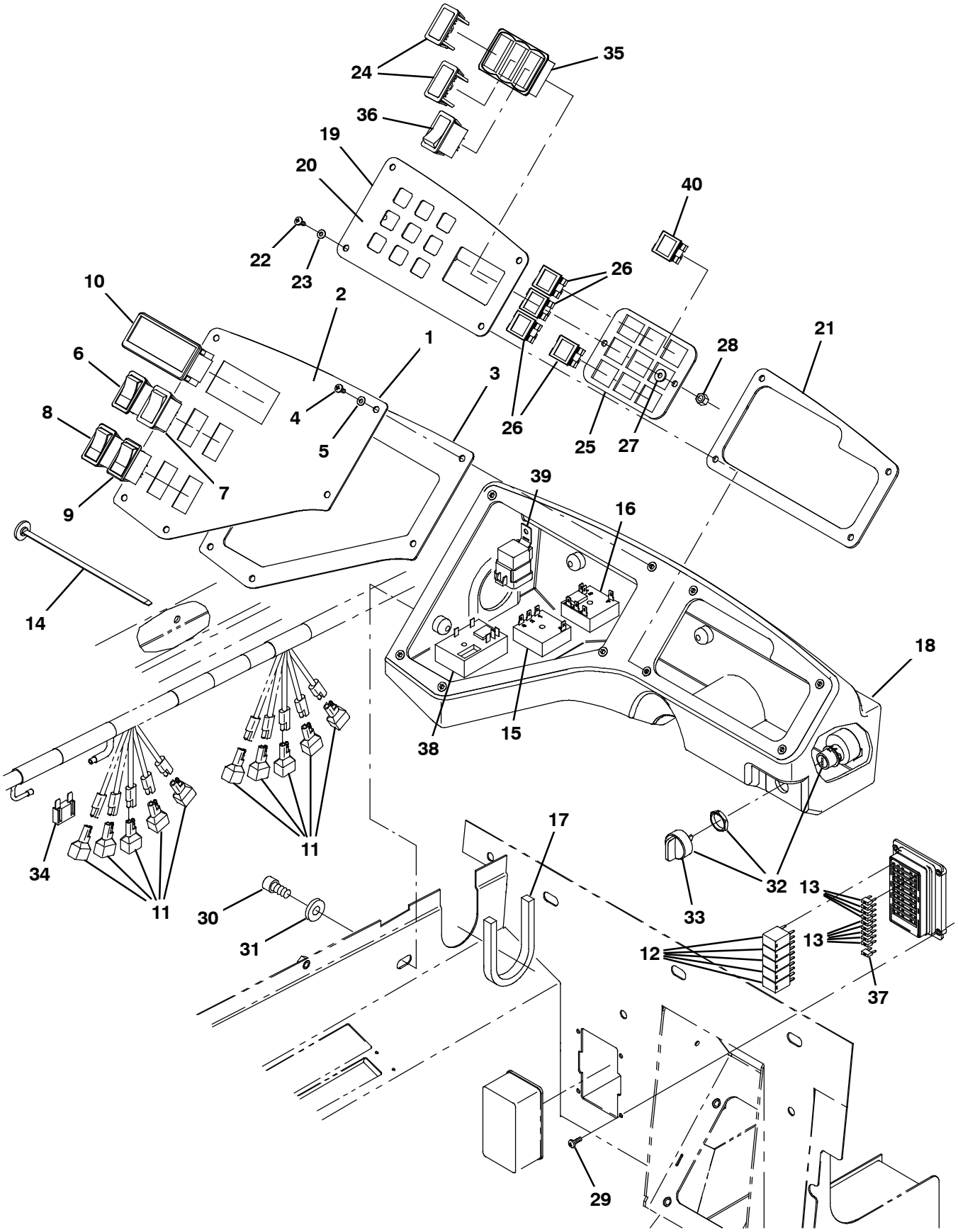

354743

Fig. 14 - Instrument Panel Group, S30

	Ref.	Part No.	Serial Number	Description	Qty.
▽		9004529	(000000-)	Panel Assy, Instmt, Basic, Replmt	1
▲	1	1031683	(000000-)	Panel, Instrument, Basic	1
▲	2	1033884	(000000-)	Label, Panl, Instmt, Basic	1
▲	3	1031211	(000000-)	Gasket, Panel, Instmt	1
▲	4	1045487	(000000-)	Screw, Pan, Phl, M5 X 0.80 X 16, Blk	5
▲	5	1012615	(000000-)	Washer, Flat, 0.19b 0.44d .03, Nyl, Blk	5
	6	377084	(000000-)	Switch, Rocker, Prgrsv	1
	7	398528	(000000-)	Switch, Rocker, Dpdt, On / Off / Mom	1
	8	398508	(000000-)	Switch, Rocker, Dpdt, Mom / Off / Mom	1
	9	397889	(000000-)	Switch, Rocker, Dpst, On / None / On	1
	10	1028750	(000000-)	Indicator, Ele, [Multi-Display]	1
	11	222290	(000000-)	Diode, Ele, Plug	10
	12	1028832	(000000-)	Relay, 12vdc, 35a, Spdt [Micro 280]	5
	13	1030985	(000000-)	Fuse, Blade, 15a, 32v [Mini]	9
	14	1041873	(000000-)	Fastener, Wire, Tie [Button Head]	2
	15	34816	(000000-)	Timer, 12vdc, 30sec On	1
	16	1030813	(000000-)	Timer, 12vdc, 6sec Spcl [Tosr116]	1
	17	1035153	(000000-)	Gasket,Harness	1
	18	1035507	(000000-)	Box, Instrument, Ii, Trimmed	1
▽		9004528	(000000-)	Panel Assy, Switch, Replmt	1
▲	19	1033771	(000000-)	Panel, Switch Ii	1
▲	20	1033883	(000000-)	Label, Panl, Instmt, Rh	1
▲	21	1031664	(000000-)	Gasket, Panel, Switch	1
▲	22	1045487	(000000-)	Screw, Pan, Phl, M5 X 0.80 X 16, Blk	4
▲	23	1012615	(000000-)	Washer, Flat, 0.19b 0.44d .03, Nyl, Blk	4
	24	398501	(000000-)	Plug, Hole, Rt, Rocker Switch, .87 X 1.7	2
	25	1033760	(000000-)	Panel, Light	1
	26	361075	(000000-)	Light, Panl, 14vdc, 1.1 X 1.0	4
	27	19066	(000000-)	Washer, Flat, 10	2
	28	08708	(000000-)	Nut, Hex, Lock, M6 X 1.00, Nl	2
	29	39239	(000000-)	Screw, Pan, Phl, 10-32 X 0.50, G2, Blk	4
	30	1056769	(000000-)	Screw, Soc, M10 X 1.50 X 16, 12.9	4
	31	32485	(000000-)	Washer, Flat, 0.38, Sae	4
▽	32	1028790	(000000-)	Switch, Key, 4 Pos [Honeywell]	1
▲	33	9004545	(000000-)	Key, Ignition [Replmt W/O Dust Boot]	1
	34	394922	(000000-)	Fuse, Blade, 060a [Maxi]	1
	35	1029951	(000000-)	Bezel, Switch [3 Gang]	1
	36	377084	(000000-)	Switch, Rocker, Prgrsv (Operating Lights)	1
	37	1036014	(000000-)	Fuse, Blade, 25a, 32vdc [Mini]	1
	38	1046893	(000000-)	Timer, 12vdc, 10a [Ce Seat Switch] (CE Only)	1
	39	56186	(000000-)	Relay, 12vdc, 040a, Spdt No (CE Only)	1
	40	361075	(000000-)	Light, Panl, 14vdc, 1.1 X 1.0 (CE Only)	1

Fig. 15 - Instrument Panel Group, S30 XP and X4

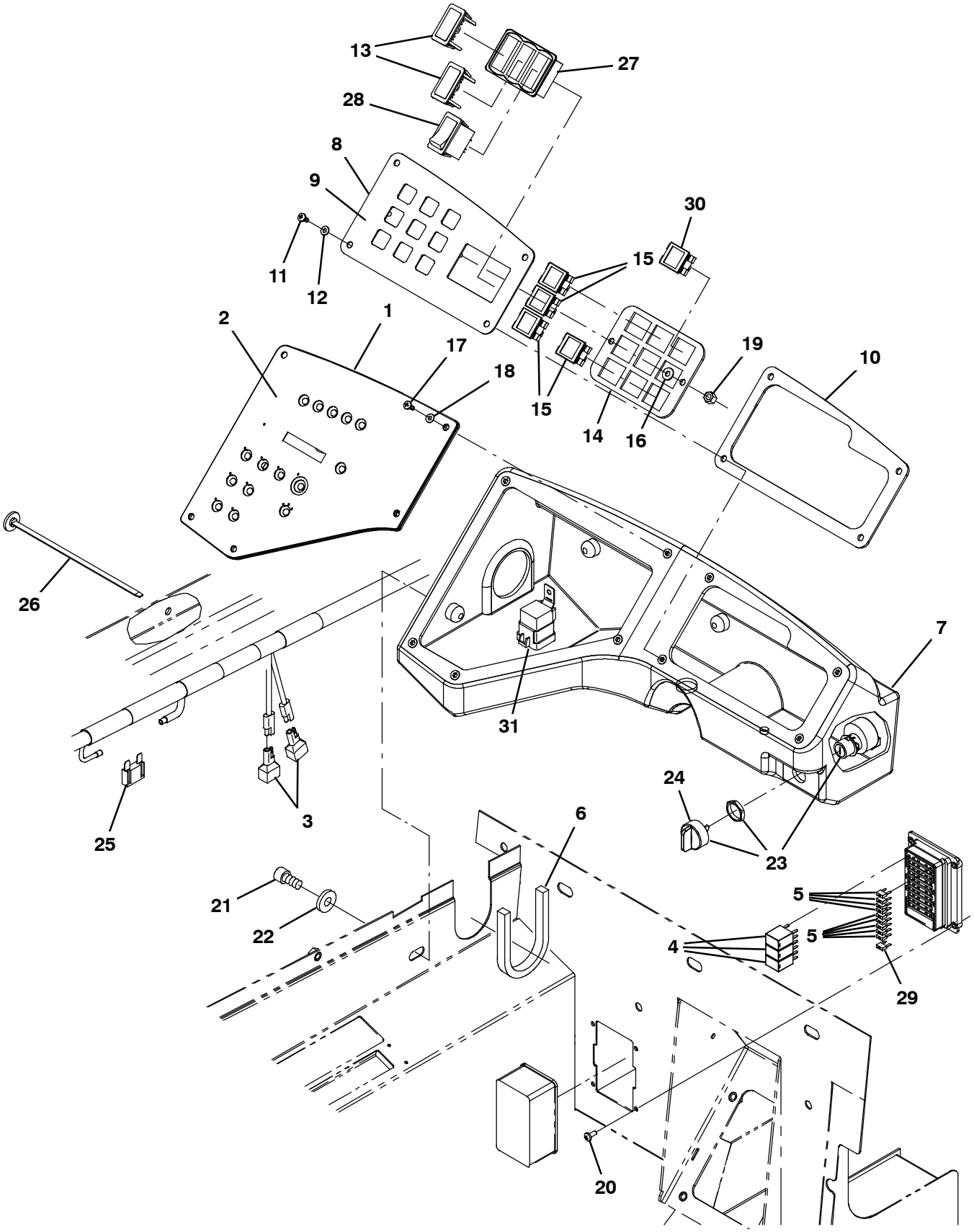

354745

Fig. 15 - Instrument Panel Group, S30 XP and X4

	Ref.	Part No.	Serial Number	Description	Qty.
	1	9004513	(000000-)	Panel Kit, Replmt [S30]	1
	2	9004325	(000000-)	Panel Kit, Label, Replmt [S30]	1
	3	222290	(000000-)	Diode, Ele, Plug	2
	4	1028832	(000000-)	Relay, 12vdc, 35a, Spdt [Micro 280]	3
	5	1030985	(000000-)	Fuse, Blade, 15a, 32v [Mini]	9
	6	1035153	(000000-)	Gasket,Harness	1
	7	1035507	(000000-)	Box, Instrument, Ii, Trimmed	1
▽		9004528	(000000-)	Panel Assy, Switch, Replmt	1
▲	8	1033771	(000000-)	Panel, Switch Ii	1
▲	9	1033883	(000000-)	Label, Panl, Instmt, Rh	1
▲	10	1031664	(000000-)	Gasket, Panel, Switch	1
▲	11	1045487	(000000-)	Screw, Pan, Phl, M5 X 0.80 X 16, Blk	4
▲	12	1012615	(000000-)	Washer, Flat, 0.19b 0.44d .03, Nyl, Blk	4
	13	398501	(000000-)	Plug, Hole, Rt, Rocker Switch, .87 X 1.7	2
	14	1033760	(000000-)	Panel, Light	1
	15	361075	(000000-)	Light, Panl, 14vdc, 1.1 X 1.0	4
	16	19066	(000000-)	Washer, Flat, 10	2
	17	1045487	(000000-)	Screw, Pan, Phl, M5 X 0.80 X 16, Blk	5
	18	1012615	(000000-)	Washer, Flat, 0.19b 0.44d .03, Nyl, Blk	5
	19	08708	(000000-)	Nut, Hex, Lock, M6 X 1.00, Nl	2
	20	39239	(000000-)	Screw, Pan, Phl, 10-32 X 0.50, G2, Blk	4
	21	1056769	(000000-)	Screw, Soc, M10 X 1.50 X 16, 12.9	4
	22	32485	(000000-)	Washer, Flat, 0.38, Sae	4
▽	23	1028790	(000000-)	Switch, Key, 4 Pos [Honeywell]	1
▲	24	9004545	(000000-)	Key, Ignition [Replmt W/O Dust Boot]	1
	25	394922	(000000-)	Fuse, Blade, 060a [Maxi]	1
	26	1041873	(000000-)	Fastener, Wire, Tie [Button Head]	2
	27	1029951	(000000-)	Bezel, Switch [3 Gang]	1
	28	377084	(000000-)	Switch, Rocker, Prgrsv (Operating Lights)	1
	29	1036014	(000000-)	Fuse, Blade, 25a, 32vdc [Mini]	1
	30	361075	(000000-)	Light, Panl, 14vdc, 1.1 X 1.0 (CE Only)	1
	31	56186	(000000-)	Relay, 12vdc, 040a, Spdt No (CE Only)	1

Fig. 16 - Steering Group (000000-002099)

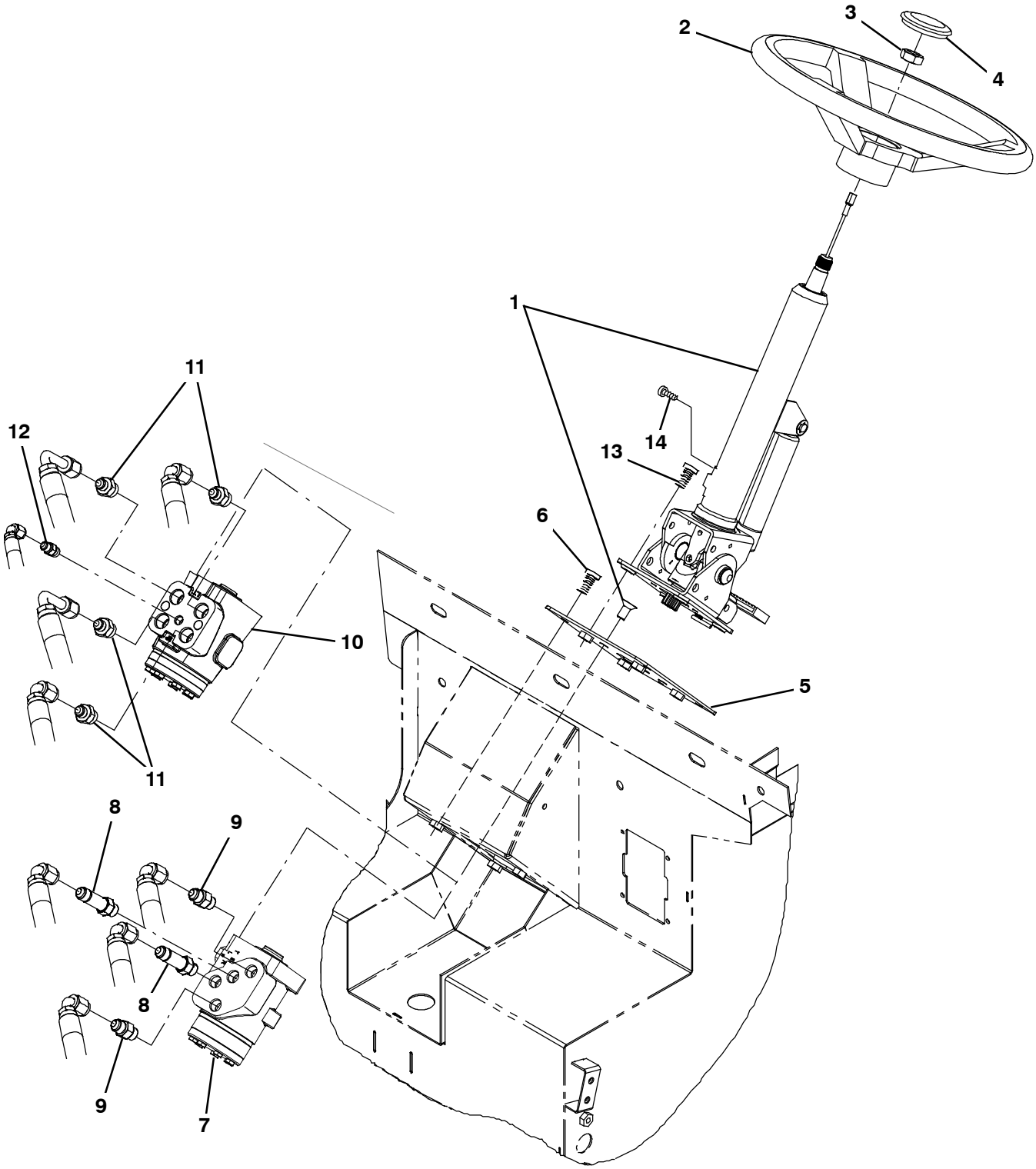

354777 - D

Fig. 16 - Steering Group (000000-002099)

	Ref.	Part No.	Serial Number	Description	Qty.
▽	1	1031621	(000000-002099)	Column, Steering, Tilt	1
▲		1040962	(000000-002099)	Bolt Kit, M10 X 1.50 X 16, Thin	1
	2	1058996	(000000-002099)	Wheel, Steering, 14.0d 0.81b 36tooth	1
	3	56185	(000000-002099)	Nut, Hex, Jam, M20 X 1.5	1
	4	1024478	(000000-002099)	Button, Cntrl, Horn	1
	5	1034803	(000000-002099)	Plate, Mtg, Steer-Control	1
	6	49609	(000000-002099)	Screw, Soc, M8 X 1.25 X 16, 12.9	4
	7	1024260	(000000-002099)	Steer-Control, Hyd05, 06.1 2030 (See Breakdowns) (S30 and S30 XP Only)	1
	8	59577	(000000-002099)	Fitting, Hyd, Str, Jm06/Om06, Long (S30 and S30 XP Only)	2
	9	56690	(000000-002099)	Fitting, Hyd, Str, Jm06/Om06 (S30 and S30 XP Only)	2
▽	10	1033969	(000000-002099)	Steer-Control, Hyd#10 04.5 4000 (S30 X4 Only)	1
▲		373704	(000000-002099)	Steer-control, Info, Repair	1
▲		373619	(000000-002099)	Seal Kit, Scu	1
	11	52402	(000000-002099)	Fitting, Hyd, Str, Jm06/Om08 (S30 X4 Only)	4
	12	55586	(000000-002099)	Fitting, Hyd, Str, Jm04/Om04 (S30 X4 Only)	1
	13	39309	(000000-002099)	Screw, Soc, M10 X 1.50 X 25, 12.9	4
	14	06926	(000000-002099)	Screw, Pan, Phl, M4 X 0.70 X 10, 4.8	1

Fig. 17 - Steering Group (002100-)

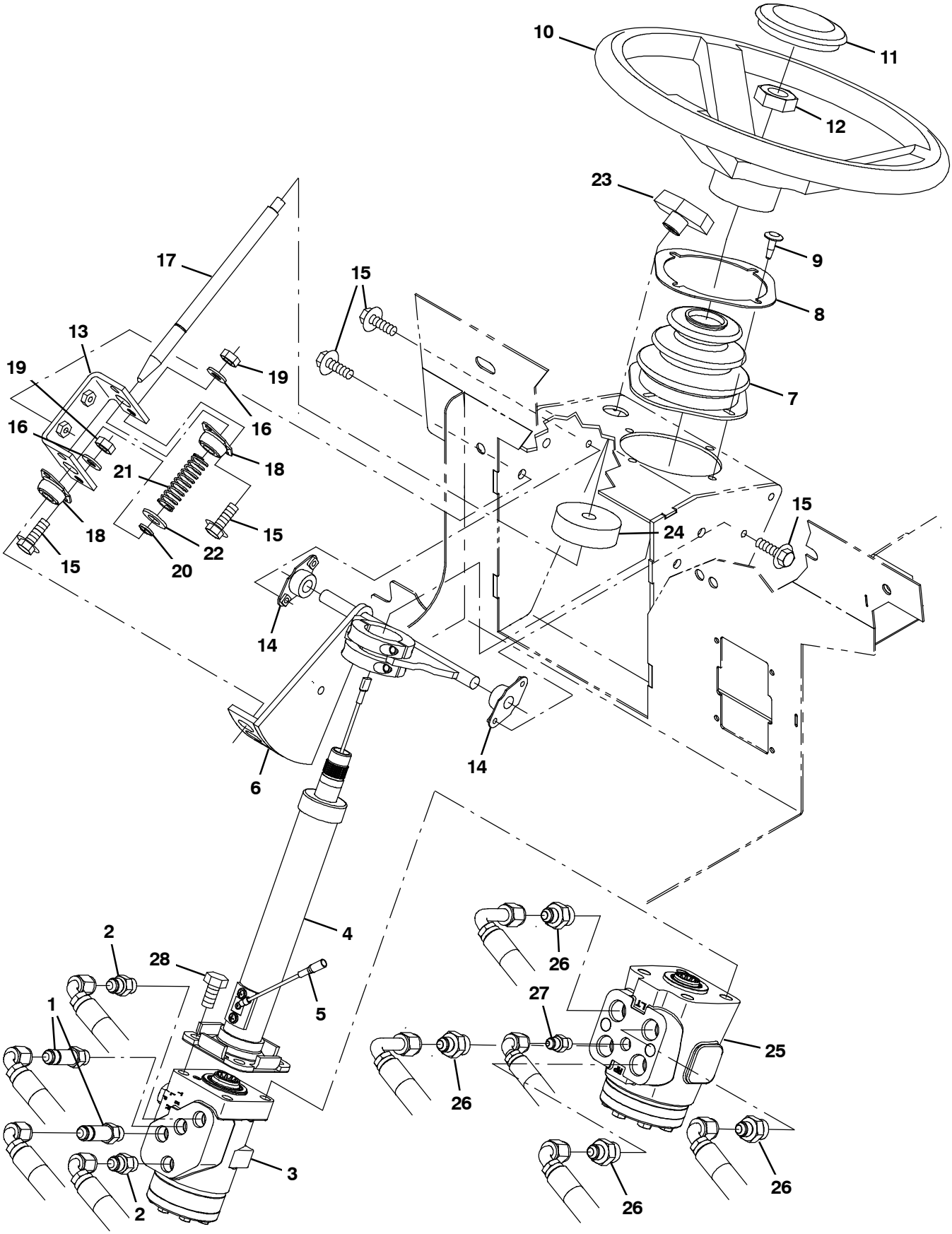

354777 - D

Fig. 17 - Steering Group (002100-)

	Ref.	Part No.	Serial Number	Description	Qty.
	1	59577	(002100-002999)	Fitting, Hyd, Str, Jm06/Om06, Long	1
	1	771090	(003000-)	Fitting, Hyd, Str, Fm06/Om06, Long	1
	2	56690	(002100-002999)	Fitting, Hyd, Str, Jm06/Om06	1
	2	762433	(003000-)	Fitting, Hyd, Str, Fm06/Om06	1
	3	1024260	(002100-)	Steer-Control, Hyd05, 06.1 2030	1
▽	4	1021265	(002100-)	Column, Steering, 09.9l 0.86d 36tooth	1
▲	5	388153	(002100-)	Contact Kit, W/ Brush [En]	1
	6	1058784	(002100-)	Bracket Wldt, Steering, Tilt	1
	7	70622	(002100-)	Boot, Bellows, 3.1l 4.4w 2.8h 1hole, Neo	1
	8	70623	(002100-)	Retainer, Boot, Steering Column	1
	9	72970	(002100-)	Rivet, Plstc, .250d X 0.90	4
	10	1058996	(002100-)	Wheel, Steering, 14.0d 0.81b 36tooth	1
	11	1024478	(002100-)	Button, Cntrl, Horn	1
	12	56185	(002100-)	Nut, Hex, Jam, M20 X 1.5	1
	13	1058807	(002100-)	Flange, Brg, Mount	1
	14	70709	(002100-)	Bearing, Flng, 2hole, 0.50b	2
	15	1040467	(002100-)	Screw, Hex, M6 X 1.00 X 20, 9.8, Sems	8
	16	32483	(002100-)	Washer, Flat, 0.25, Sae	4
	17	1058785	(002100-)	Pin, Locking, Steering, Tilt [S30]	1
	18	47585	(002100-)	Bearing, Flng, 2hole, 0.50b [Nyl]	2
	19	08708	(002100-)	Nut, Hex, Lock, M6 X 1.00, Nl	4
	20	70717	(002100-)	Ring, Retaining, Ext, 0.50d, Hd	1
	21	22290	(002100-)	Spring, Cmpr, 0.72od .06wir 02.3l	1
	22	32486	(002100-)	Washer Flat,0.50,Sae	1
	23	04706	(002100-)	Knob, Tee, 0.38-16, 2.5 X 1.0 1.1l,Plstc	1
	24	75968	(002100-)	Insulation, Acstc, Rnd, 0.8, 02.5d 0.5h	1
▽	25	1033969	(002100-)	Steer-Control, Hyd#10 04.5 4000 (S30 X4 Only)	1
▲		373704	(002100-)	Steer-control, Info, Repair	1
▲		373619	(002100-)	Seal Kit, Scu	1
	26	52402	(002100-002999)	Fitting, Hyd, Str, Jm06/Om08 (S30 X4 Only)	4
	26	762438	(003000-)	Fitting, Hyd, Str, Fm06/Om08 (S30 X4 Only)	4
	27	55586	(002100-002999)	Fitting, Hyd, Str, Jm04/Om04 (S30 X4 Only)	1
	27	762428	(003000-)	Fitting, Hyd, Str, Fm04/Om04 (S30 X4 Only)	1
	28	06961	(002100-)	Screw, Hex, M10 X 1.50 X 20, 8.8	4

Fig. 18 - Engine and Mount Group, Diesel

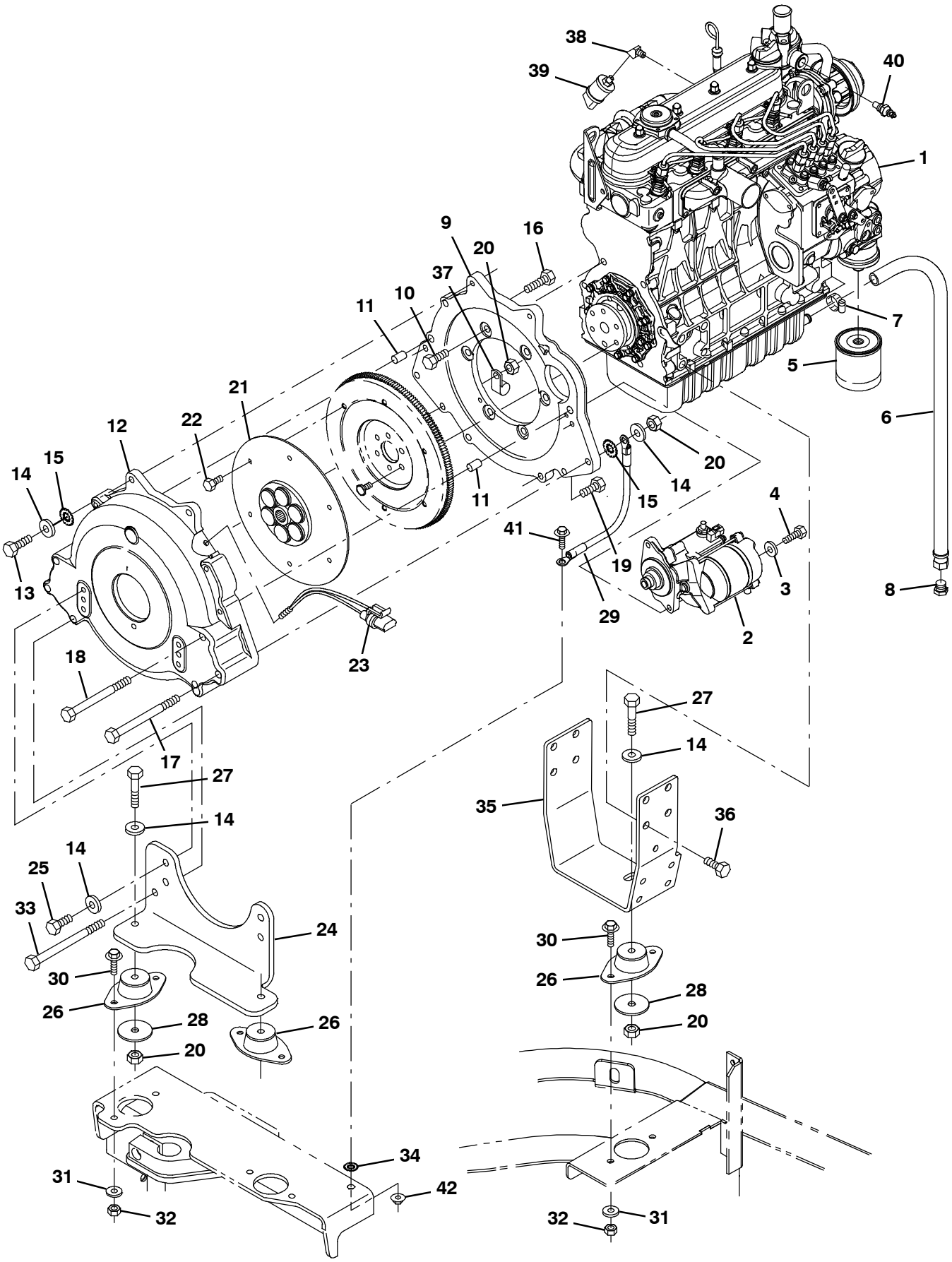

354764

Fig. 18 - Engine and Mount Group, Diesel

	Ref.	Part No.	Serial Number	Description	Qty.
▽	1	1027188	(000000-001067)	Engine Assy, Dsl, 37Hp, (See Engine Breakdown)	1
▲	2	74405	(000000-001067)	Starter, 12vdc [Kubota]	1
▲	3	39349	(000000-001067)	Washer, Flat, 0.31, Sae	2
▲	4	76570	(000000-001067)	Screw, Hex, M8 X 1.25 X 30, 8.8	2
▲	5	55849	(000000-001067)	Element, Fltr, Oil, Eng, Spin-On[Ku]	1
▽	1	1040096	(001068-006022)	Engine Assy, Dsl, 37Hp, (See Engine Breakdown)	1
▲	2	74405	(001068-006022)	Starter, 12vdc [Kubota]	1
▲	3	39349	(001068-006022)	Washer, Flat, 0.31, Sae	2
▲	4	76570	(001068-006022)	Screw, Hex, M8 X 1.25 X 30, 8.8	2
▲	5	55849	(001068-006022)	Element, Fltr, Oil, Eng, Spin-On[Ku]	1
▽	1	1072224	(006023-)	Engine Assy, Dsl, 25hp [Ku V1505 Tier4f] (See Engine Breakdown)	1
▲	2	74405	(006023-)	Motor, Starter, 12vdc [Kubota] (See Engine Breakdown)	1
▲	3	39349	(006023-)	Washer, Flat, 0.31, Sae	2
▲	4	76570	(006023-)	Screw, Hex, M8 X 1.25 X 30, 8.8	2
▲	5	55849	(006023-)	Element, Fltr, Oil, Eng, Spin-On[Ku]	1
	6	1027273	(000000-)	Hose, 0300, 08, Jf08str / None, 19.0	1
	7	63810	(000000-)	Clamp, Hose, Wormdrive, 0.56-1.06d, .56w	1
	8	16376	(000000-)	Fitting, Hyd, Plug, Jm08	1
	9	55837	(000000-)	Adapter, Hsng, Flywheel [1505, Kubo]	1
	10	07299	(000000-)	Screw, Hex, M10 X 1.25 X 25, 8.8	6
	11	54911-16	(000000-)	Pin, Dowel, Cyl Block [1pk=4]	2
	12	1035999	(000000-)	Housing, Flywheel, Mach, Dsl, 3 Wheel (S30 Only)	1
	12	1032919	(000000-)	Housing, Flywheel, Mach, Dsl, 4 Wheel (S30 X4 Only)	1
	13	39284	(000000-)	Screw, Hex, M10 X 1.50 X 35, 8.8	3
	14	32492	(000000-)	Washer, Flat, 0.38, Std	13
	15	41142	(000000-)	Washer, Lock, Int-Ext, 0.38	3
	16	39285	(000000-)	Screw, Hex, M10 X 1.50 X 40, 8.8	1
	17	06966	(000000-)	Screw, Hex, M10 X 1.50 X 110, 8.8	4
	18	34877	(000000-)	Screw, Hex, M10 X 1.50 X 100, 8.8	1
	19	03192	(000000-)	Screw, Hex, M10 X 1.50 X 30, 8.8	2
	20	41430	(000000-)	Nut, Hex, Lock, M10 X 1.5, Nl	9
	21	19252	(000000-)	Coupling, Drive, Flex, 09.5d /13tooth (S30 Only)	1
	21	77214	(000000-)	Coupling, Drive, Flex, 09.5d /15tooth (S30 X4 Only)	1
	22	16735	(000000-)	Screw, Hex, M8 X 1.25 X 16, 8.8	1
	23	380521	(000000-)	Magnet, Pickup	1
	24	1032108	(000000-)	Bracket, Mtg, Eng, Rear [Kubota]	1
	25	39283	(000000-)	Screw, Hex, M10 X 1.50 X 25, 8.8	4
	26	1029018	(000000-)	Isolator, Vib, Flng, 1.3h .4b 2/.34h	3
	27	06963	(000000-)	Screw, Hex, M10 X 1.50 X 60, 8.8	3
	28	58228	(000000-)	Washer, Flat, 0.44b 2.00d .12, Stl, Pl	1
	29	57773	(000000-)	Cable, 06ga 13.0l Blk	1
	30	1037354	(000000-)	Screw, Hex, M8 X 1.25 X 30, 9.8, Sems	6
	31	32491	(000000-)	Washer, Flat, 0.31, Std	6
	32	08709	(000000-)	Nut, Hex, Lock, M8 X 1.25, Nl	6
	33	06537	(000000-)	Screw, Hex, M10 X 1.50 X 120, 8.8, Fl	1
	34	41140	(000000-)	Washer, Lock, Int-ext, 0.25	1
	35	1032184	(000000-)	Bracket, Mtg, Eng [Kubota]	1
	36	58286	(000000-)	Screw, Hex, M10 X 1.25 X 20, 8.8	8
	37	30407	(000000-)	Clip, Keeper, Open	1
	38	24976	(000000-)	Fitting, Brs, E45, Pf02/Pm02	1

Fig. 18 - Engine and Mount Group, Diesel

Ref.	Part No.	Serial Number	Description	Qty.
39	79399	(000000-)	Switch, Press, 0006psi Dpdt	1
40	9005789	(000000-001476)	Switch Kit, Replmt, Thermostat, Eng	1
40	1050757	(001477-)	Switch, Thermostat, Water	1
41	1036892	(000000-)	Screw, Hex, M6 X 1.00 X 25, 9.8 Sems	1
42	07790	(000000-)	Nut, Hex, Flng, M6 X 1.00	1

Fig. 19 - Engine Governor and Electrical Group, Diesel

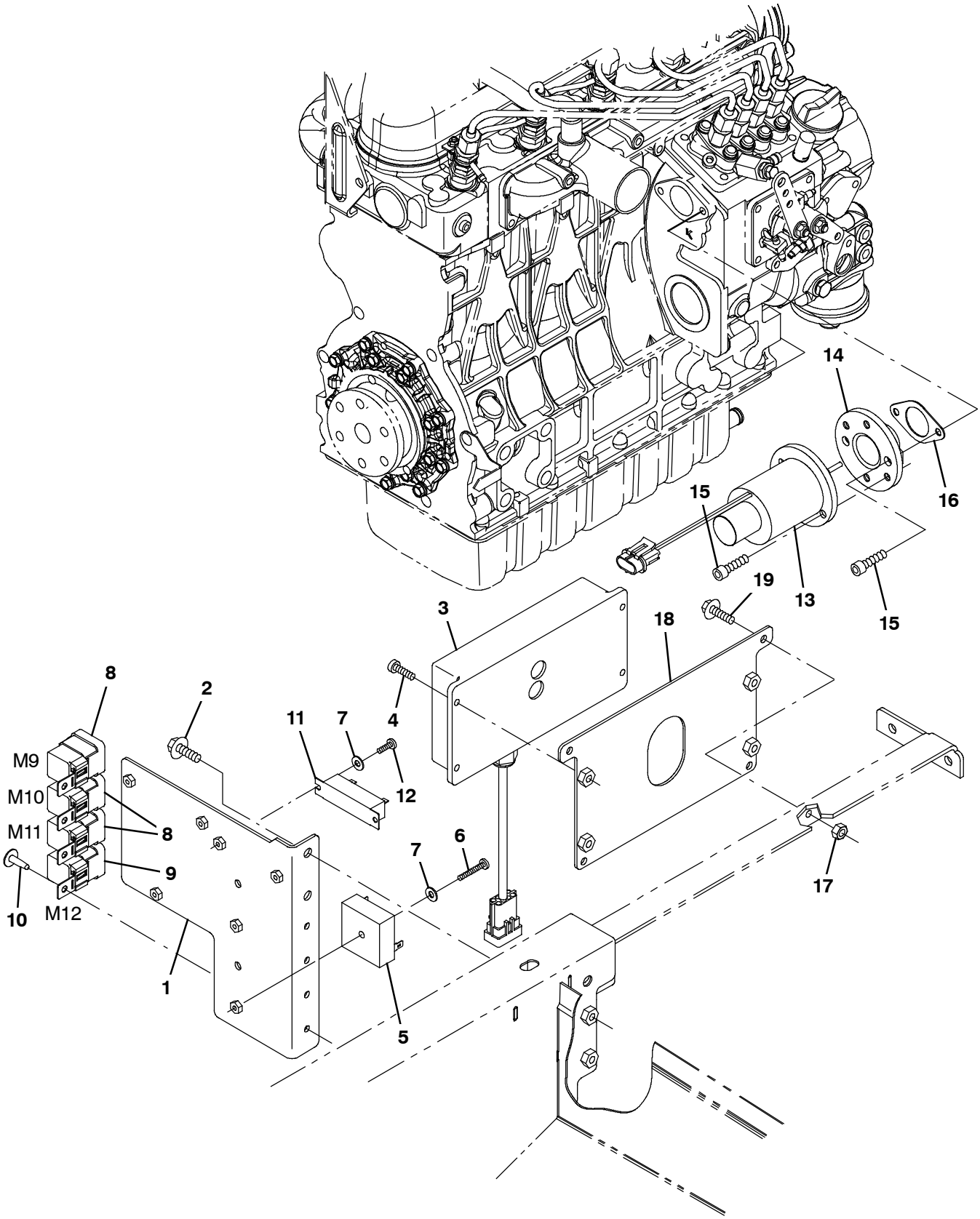

354775

Fig. 19 - Engine Governor and Electrical Group, Diesel

Ref.	Part No.	Serial Number	Description	Qty.
1	1045865	(000000-)	Plate, Mtg, Cntrl, Eng	1
2	1037346	(000000-)	Screw, Hex, M8 X 1.25 X 25, 9.8, Sems	2
3	1040835	(000000-)	Control, Govnr [All Purpose]	1
4	06934	(000000-)	Screw, Pan, Phl, M5 X 0.80 X 20, 4.8	4
5	379656	(000000-)	Timer, 12vdc, 1a [10s Sgl Shot]	1
6	06938	(000000-)	Screw, Pan, Phl, M5 X 0.80 X 40, 4.8	1
7	19066	(000000-)	Washer, Flat, 10	3
8	56186	(000000-)	Relay, 12vdc, 040a, Spdt No	3
9	380559	(000000-)	Relay, 12vdc, 070a, Spst No [Potter]	1
10	72970	(000000-)	Rivet, Plstc, .250d X 0.90	4
11	71539	(000000-)	Resistor, 022.00ohm, 0040watt	1
12	06933	(000000-)	Screw, Pan, Phl, M5 X 0.80 X 16, 4.8	2
13	71385	(000000-)	Actuator, Govnr, Dsl	1
14	393401	(000000-)	Adapter, Actuator, Govnr, Eng, Dsl	1
15	71388	(000000-)	Screw, Soc, M6 X 1.00 X 16, 12.9	4
16	70165	(000000-)	Gasket, Solenoid, Throttle [Ku]	1
17	08708	(000000-)	Nut, Hex, Lock, M6 X 1.00, Nl	2
18	1045999	(000000-)	Bracket, Mtg, Cntrl, Eng	1
19	1040467	(000000-)	Screw, Hex, M6 X 1.00 X 20, 9.8, Sems	2

Fig. 20 - Engine Fuel Tank Group, Diesel

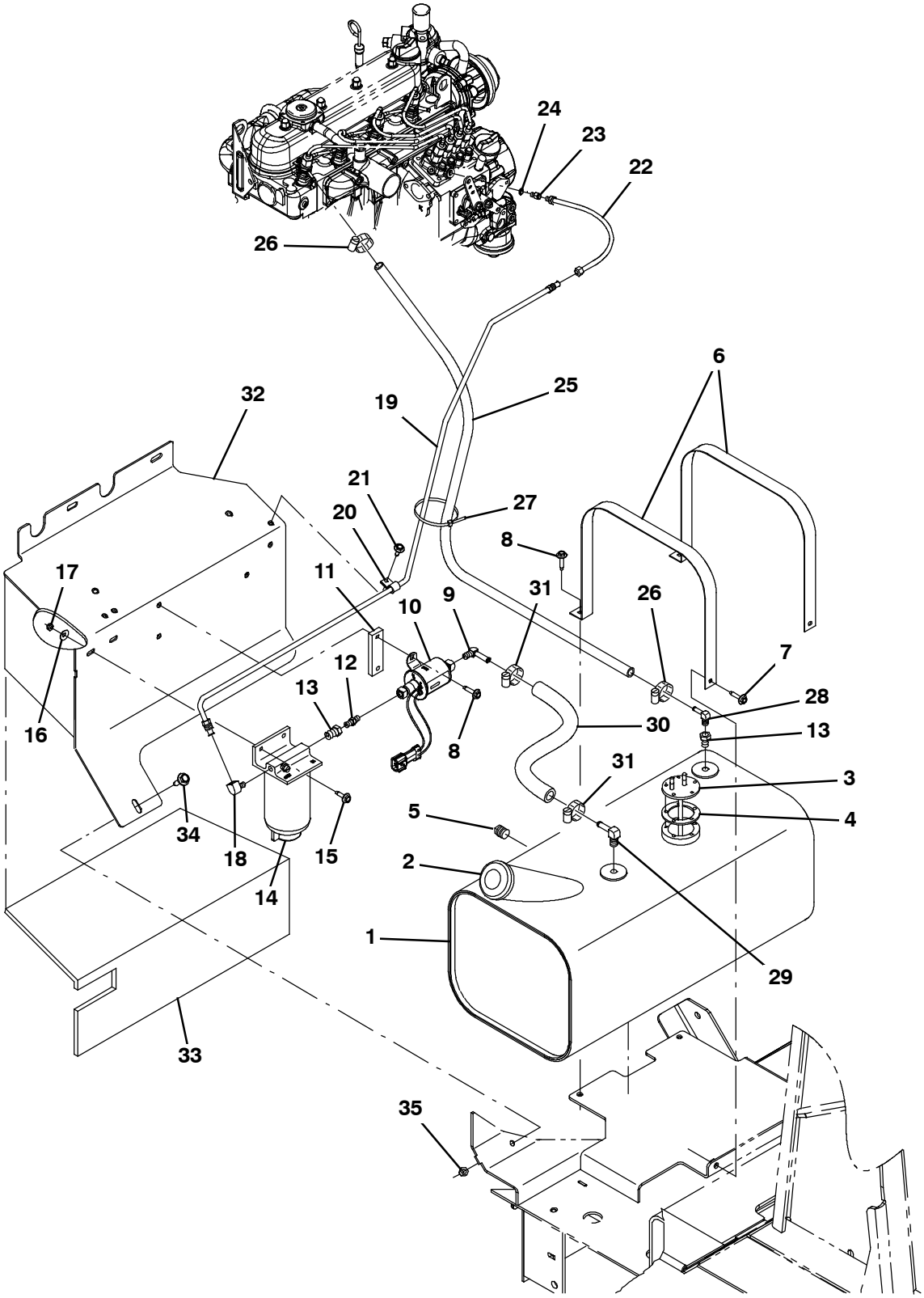

354765

Fig. 20 - Engine Fuel Tank Group, Diesel

	Ref.	Part No.	Serial Number	Description	Qty.
▽	1	1033575	(000000-)	Tank, Fuel	1
▲	2	1032812	(000000-)	Cap, Fuel, Tank	1
▲	3	1046613	(000000-)	Send-Unit, Fuel	1
▲	4	1033897	(000000-)	Gasket, Sender, Fuel	1
▲	5	02351	(000000-)	Fitting, Pipe, Plug, Pm04, Sq Head	1
	6	1033630	(000000-)	Strap, Tank, Fuel	2
	7	1040467	(000000-)	Screw, Hex, M6 X 1.0 X 20, 9.8, Sems	2
	8	1037345	(000000-)	Screw, Hex, M6 X 1.00 X 30, 9.8, Sems	4
	9	53029	(000000-)	Fitting, Brs, E90, Em05/Pm02	1
	10	59015	(000000-)	Pump, Fuel	1
	11	364779	(000000-)	Bar, Flat, Stl 0.38, 01.00 X 03.3l	1
	12	47566	(000000-)	Fitting, Hyd, Str, Pm02/Pm02	1
	13	17414	(000000-)	Fitting, Hyd, Str, Pf02/Pm04	2
▽	14	1016827	(000000-)	Filter Assy, Fuel, Dsl	1
▲		1017126	(000000-)	Element, Fltr, Fuel [Dn]	1
	15	1036892	(000000-)	Screw, Hex, M6 X 1.00 X 25, 9.8 Sems	2
	16	32490	(000000-)	Washer, Flat, 0.25, Std	2
	17	08708	(000000-)	Nut, Hex, Lock, M6 X 1.00, Nl	2
	18	15555-2	(000000-)	Fitting, Brs, E90, If05/Pm04	1
	19	1037786	(000000-)	Fuelline, .31d 05if/05if, Stl	1
	20	40678	(000000-)	Clamp, Cable, Stl, 0.44d X 0.62w, 1hole	1
	21	1040467	(000000-)	Screw, Hex, M6 X 1.0 X 20, 9.8, Sems	1
	22	70173	(000000-)	Hose, 0050, 04, If05str / Im05str, 10.0	1
	23	365066	(000000-)	Fitting, Hyd, Str, Metric, Om10/If05	1
	24	77002	(000000-)	Seal, Org, .064 X 00.30id #03	1
	25	72489	(000000-)	Hose, Fuel, 0.18id, 54.0l	1
	26	43844	(000000-)	Clamp, Hose, Wormdrive, 0.25-0.62d, .31w	2
	27	49266	(000000-)	Tie, Cable, Nyl, 07.3l .19w 1.8 Max D	3
	28	32183	(000000-)	Fitting, Brs, E90, Bm03/Pm02	1
	29	9000355	(000000-)	Fitting, Brs, E90, Em05/Pm04	1
	30	1033746	(000000-)	Hose, Fuel, 0.31id [Evap Emission 07]	1
	31	54333	(000000-)	Clamp, Hose, Wormdrive, 0.31-0.88d, .31w	2
	32	1044992	(000000-)	Panel Wldt, Deflector, Heat	1
	33	1035813	(000000-)	Insulation, Flame-Retardant, 0.5	1
	34	1037346	(000000-)	Screw, Hex, M8 X 1.25 X 25, 9.8, Sems	3
	35	07791	(000000-)	Nut, Hex, Flng, M8 X 1.25	3

Fig. 21 - Engine Air Cleaner Group, Diesel

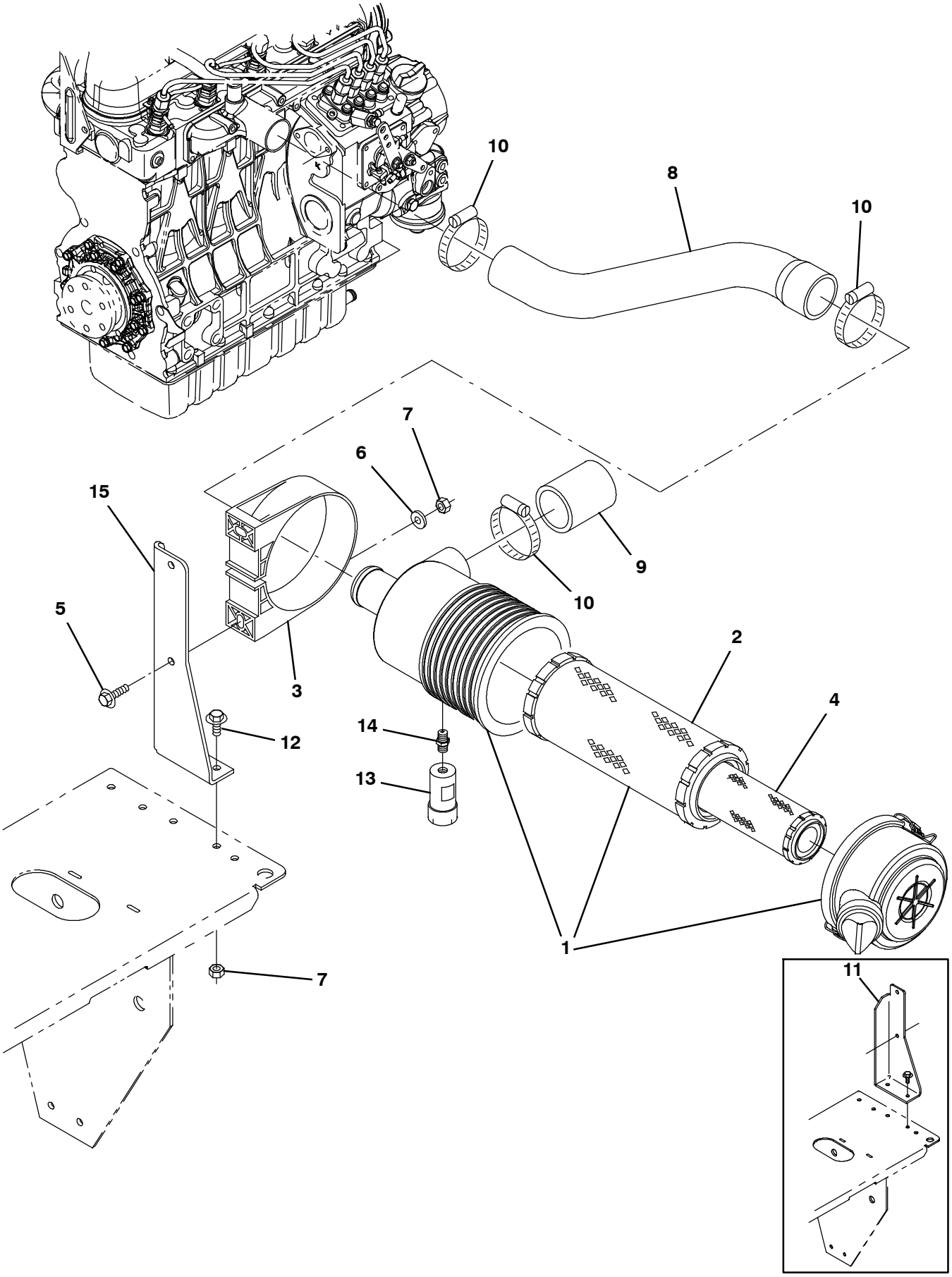

354766

Fig. 21 -Engine Air Cleaner Group, Diesel

	Ref.	Part No.	Serial Number	Description	Qty.
▽	1	1032119	(000000-)	Filter, Air, 2.0 Inlet, Str	1
▲	2	369746	(000000-)	Element, Fltr, Air [Dn]	1
	3	369747	(000000-)	Clamp, Mtg, Fltr, Air	1
	4	398279	(000000-)	Element, Fltr, Air, Safety	1
	5	1037355	(000000-)	Screw, Hex, M8 X 1.25 X 35, 9.8, Sems	2
	6	32491	(000000-)	Washer, Flat, 0.31, Std	2
	7	08709	(000000-)	Nut, Hex, Lock, M8 X 1.25, Nl	4
	8	1036377	(000000-)	Hose, Intake, Mold, 1.75id 2.00id [Epdm]	1
	9	1038209	(000000-)	Hose, Rbr, 2.00id 2.50od 02.5l	1
	10	14432	(000000-)	Clamp, Hose, Wormdrive, 1.81-2.75d, .50w	3
	11	1043751	(000000-002099)	Bracket, Mtg, Air-Clnr	1
	12	1037354	(000000-)	Screw, Hex, M8 X 1.25 X 30, 9.8, Sems	2
	13	03026	(000000-)	Indicator, Service, Fltr, Air [20h20 Dn]	1
	14	51560-5	(000000-)	Fitting, Brs, Str, Pm02, Service	1
	15	1057890	(002100-)	Bracket, Mtg, Air-Clnr	1

Fig. 22 - Engine Alternator and Battery Group, Diesel

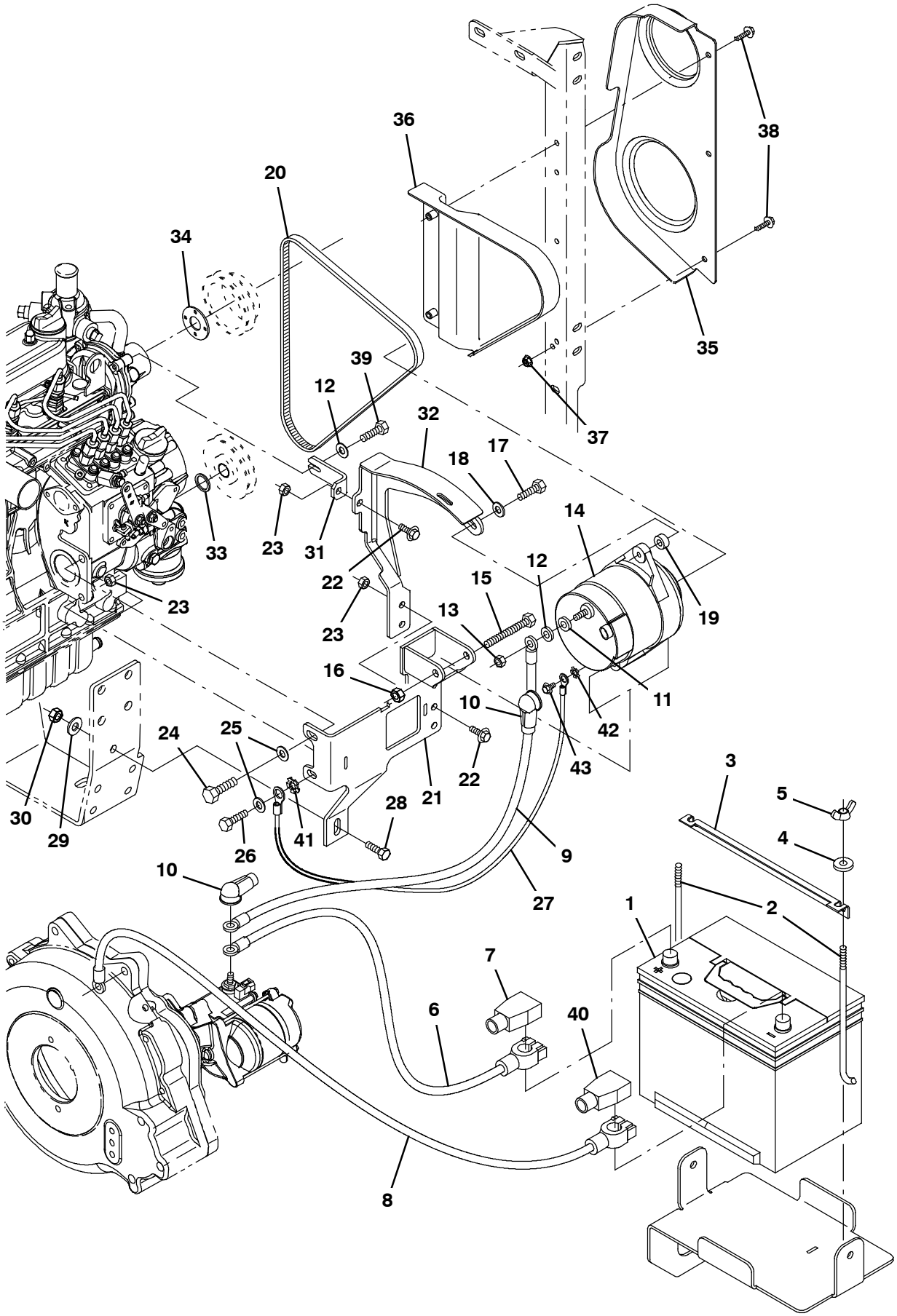

354767

Fig. 22 - Engine Alternator and Battery Group, Diesel

Ref.	Part No.	Serial Number	Description	Qty.
1	10143	(000000-)	Battery, Wet, 12vdc 0600cca	1
2	13015	(000000-)	Bolt, Hold-Down, Battery 08.5l	2
3	72977	(000000-)	Bracket, Angle, Hold-Down, Battery	1
4	01685	(000000-)	Washer, Flat, 0.38b 0.88d .08, Ss	2
5	39272	(000000-)	Nut, Wing, .31-18	2
6	34823	(000000-)	Cable, Battery, 02ga 33.0l Red .38ring	1
7	1016314	(000000-)	Boot, 90deg .50id 1.00id 2.50l, Red	1
8	34821	(000000-)	Cable, Battery, 02ga 36.0l Blk .38ring	1
9	1029689	(000000-)	Cable, 06ga 16.0l Red .38ring /.38ring	1
10	1016314	(000000-)	Boot, 90deg .50id 1.00id 2.50l, Red	2
11	32984	(000000-)	Washer, Lock, Int, 0.31	1
12	39349	(000000-)	Washer, Flat, 0.31, Sae	1
13	41361	(000000-)	Nut, Hex, Std, M8 X 1.25, Brs	1
14	392611	(000000-)	Alternator, 12vdc, 075a [Valeo]	1
15	35707	(000000-)	Screw, Hex, .38-16 X 3.00, G5	1
16	36643	(000000-)	Nut, Hex, Lock, .38-16, Nl, Thin	1
17	76956	(000000-)	Screw, Hex, .31-18 X 1.25, G5	1
18	41186	(000000-)	Washer, Flat, Belleville, .31	1
19	73737	(000000-)	Tube, 0.38id 0.75od 00.3l, Ss	1
20	393244	(000000-)	Belt, V, 42.0l [Hc41]	1
21	1036844	(000000-)	Bracket Wldt, Mtg, Alternator, Dsl	1
22	1037346	(000000-)	Screw, Hex, M8 X 1.25 X 25, 9.8, Sems	3
23	08709	(000000-)	Nut, Hex, Lock, M8 X 1.25, Nl	4
24	58286	(000000-)	Screw, Hex, M10 X 1.25 X 20, 8.8	1
25	39349	(000000-)	Washer, Flat, 0.31, Sae	2
26	41342	(000000-)	Screw, Hex, M8 X 1.25 X 40, 8.8	1
27	31525	(000000-)	Wire, 10ga 16.0l Blk .25ring /.38ring	1
28	39283	(000000-)	Screw, Hex, M10 X 1.50 X 25, 8.8	1
29	32492	(000000-)	Washer, Flat, 0.38, Std	1
30	41430	(000000-)	Nut, Hex, Lock, M10 X 1.5, Nl	1
31	1036859	(000000-)	Bracket, Sppt, Alternator, Dsl	1
32	1036847	(000000-)	Arm Wldt, Alternator, Dsl	1
33	1039208	(000000-)	Washer, Flat, 1.10b 1.50d .12, Stl, Pl	1
34	1039212	(000000-)	Spacer, Fan	1
35	9004523	(000000-)	Guard, Belt, Dsl, W/ Label, Replmt	1
36	9004522	(000000-)	Guard, Belt, Dsl, W/ Label, Replmt	1
37	07790	(000000-)	Nut, Hex, Flng, M6 X 1.00	1
38	1036892	(000000-)	Screw, Hex, M6 X 1.00 X 25, 9.8 Sems	3
39	39277	(000000-)	Screw, Hex, M8 X 1.25 X 25, 8.8	1
40	68872	(000000-)	Boot, Terminal, Battery, 02-01ga, Blk	1
41	41141	(000000-)	Washer, Lock, Int-ext, 0.31	1
42	41139	(000000-	Washer, Lock, Int-ext, 10	1
43	42011	(000000-	Screw, Hex, 10-24 X 0.50, Ss	1

Fig. 23 - Engine Muffler Group, Diesel S30 and XP

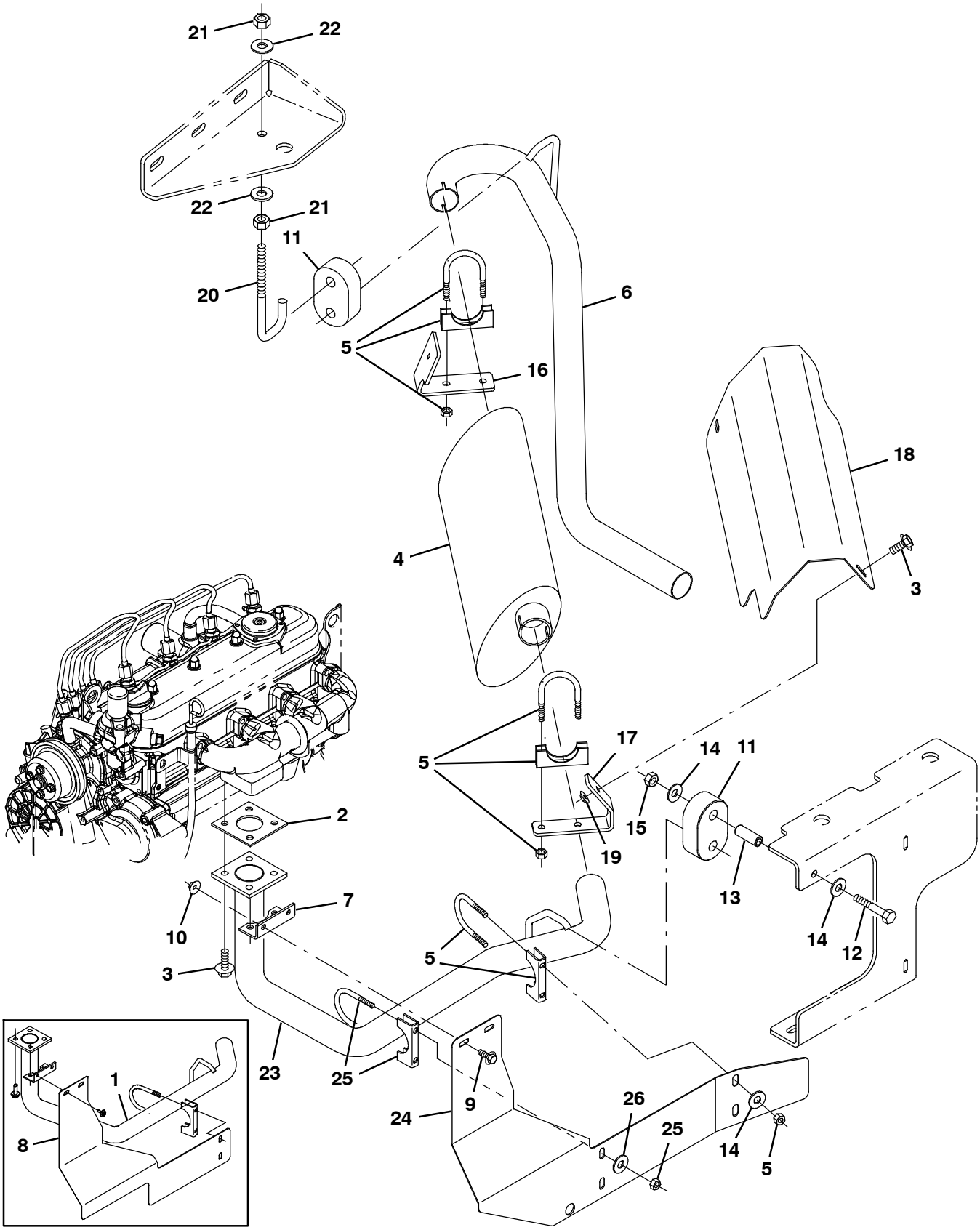

354768

Fig. 23 - Engine Muffler Group, Diesel S30 and XP

Ref.	Part No.	Serial Number	Description	Qty.
1	9008230	(000000-002099)	Tube Kit, Exhaust, Repair, Dsl [S30]	1
2	51332	(000000-)	Gasket [Ku]	1
3	1037346	(000000-)	Screw, Hex, M8 X 1.25 X 25, 9.8, Sems	6
4	364805	(000000-)	Muffler, Exhaust	1
5	24012	(000000-)	Clamp, Muffler, 1.62d	3
6	1035857	(000000-)	Tube, Exhaust, Tailpipe, 3 Wheel	1
7	1036103	(000000-)	Bracket, Mtg, Heat Shield	1
8	9004517	(000000-002099)	Shield, Heat, W/ Label, DSL, Replmt	1
9	1040467	(000000-)	Screw, Hex, M6 X 1.0 X 20, 9.8, Sems	2
10	07790	(000000-)	Nut, Hex, Flng, M6 X 1.00	2
11	1013031	(000000-)	Isolator, Rbr	2
12	39278	(000000-)	Screw, Hex, M8 X 1.25 X 50, 8.8	1
13	222497	(000000-)	Sleeve, P/M, 0.31b 0.50d 1.3l [430ss]	1
14	32491	(000000-)	Washer, Flat, 0.31, Std	4
15	08709	(000000-)	Nut, Hex, Lock, M8 X 1.25, Nl	1
16	1043613	(000000-)	Bracket, Mtg, Heat Shield	1
17	1043610	(000000-)	Bracket, Mtg, Heat Shield	1
18	1027148	(000000-)	Channel, Shield, Muffler	1
19	07791	(000000-)	Nut, Hex, Flng, M8 X 1.25	2
20	1013117	(000000-)	Rod, Hanger, Isolator	1
21	25014	(000000-)	Nut, Hex, Std, .38-16	2
22	32492	(000000-)	Washer, Flat, 0.38, Std	2
23	1059532	(002100-)	Tube Wldt, Exhaust, Dsl [Roto Cover]	1
24	9008228	(002100-)	Shield, Heat, W/Label, Dsl, Replmt	1
25	24012	(002100-)	Clamp, Muffler, 1.62d	1
26	32491	(002100-)	Washer, Flat, 0.31, Std	2

Fig. 24 - Engine Muffler Group, Diesel S30 X4

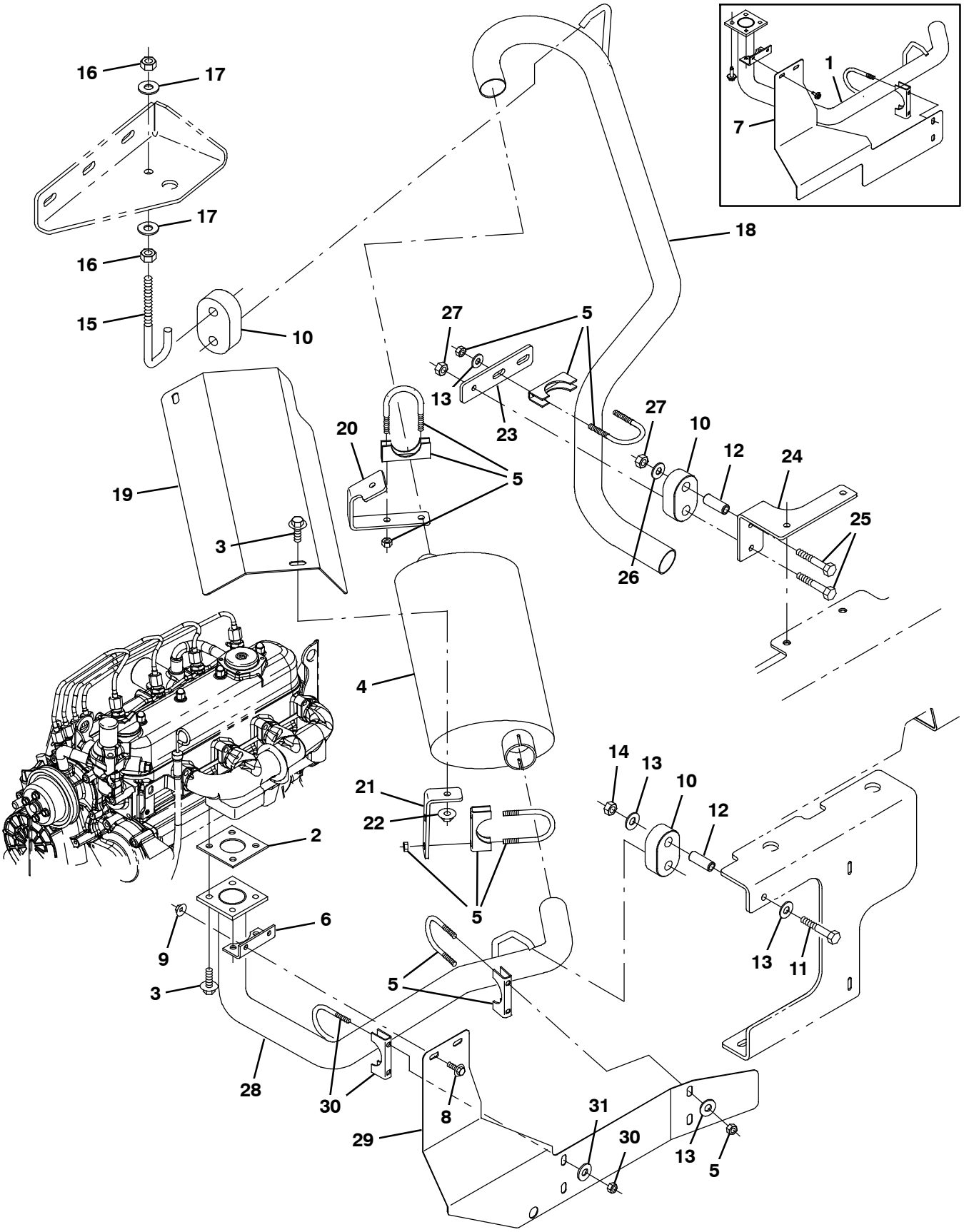

354769

Fig. 24 - Engine Muffler Group, Diesel S30 X4

Ref.	Part No.	Serial Number	Description	Qty.
1	9008230	(000000-002099)	Tube Kit, Exhaust, Repair, Dsl [S30]	1
2	51332	(000000-)	Gasket [Ku]	1
3	1037346	(000000-)	Screw, Hex, M8 X 1.25 X 25, 9.8, Sems	6
4	364805	(000000-)	Muffler, Exhaust	1
5	24012	(000000-)	Clamp, Muffler, 1.62d	4
6	1036103	(000000-)	Bracket, Mtg, Heat Shield	1
7	9004517	(000000-002099)	Shield, Heat, W/ Label, DSL, Replmt	1
8	1040467	(000000-)	Screw, Hex, M6 X 1.0 X 20, 9.8, Sems	2
9	07790	(000000-)	Nut, Hex, Flng, M6 X 1.00	2
10	1013031	(000000-)	Isolator, Rbr	3
11	39278	(000000-)	Screw, Hex, M8 X 1.25 X 50, 8.8	1
12	222497	(000000-)	Sleeve, P/M, 0.31b 0.50d 1.3l [430ss]	2
13	32491	(000000-)	Washer, Flat, 0.31, Std	5
14	08709	(000000-)	Nut, Hex, Lock, M8 X 1.25, Nl	1
15	1013117	(000000-)	Rod, Hanger, Isolator	1
16	25014	(000000-)	Nut, Hex, Std, .38-16	2
17	32492	(000000-)	Washer, Flat, 0.38, Std	2
18	1039290	(000000-)	Tube, Exhaust, Tailpipe, 4 Wheel	1
19	1039295	(000000-)	Channel, Shield, Muffler	1
20	1044752	(000000-)	Bracket, Mtg, Heat Shield	1
21	1044754	(000000-)	Bracket, Mtg, Heat Shield	1
22	07791	(000000-)	Nut, Hex, Flng, M8 X 1.25	2
23	1039388	(000000-)	Bracket, Mtg, Isolator	1
24	1039389	(000000-)	Bracket, Mtg, Isolator	1
25	16930	(000000-)	Screw, Hex, M10 X 1.50 X 50, 8.8	2
26	32493	(000000-)	Washer, Flat, 0.50, Std	1
27	41430	(000000-)	Nut, Hex, Lock, M10 X 1.5, Nl	2
28	1059532	(002100-)	Tube Wldt, Exhaust, Dsl [Roto Cover]	1
29	9008228	(002100-)	Shield, Heat, W/Label, Dsl, Replmt	1
30	24012	(002100-)	Clamp, Muffler, 1.62d	1
31	32491	(002100-)	Washer, Flat, 0.31, Std	2

Fig. 25 - Engine Radiator Hoses Group, Diesel

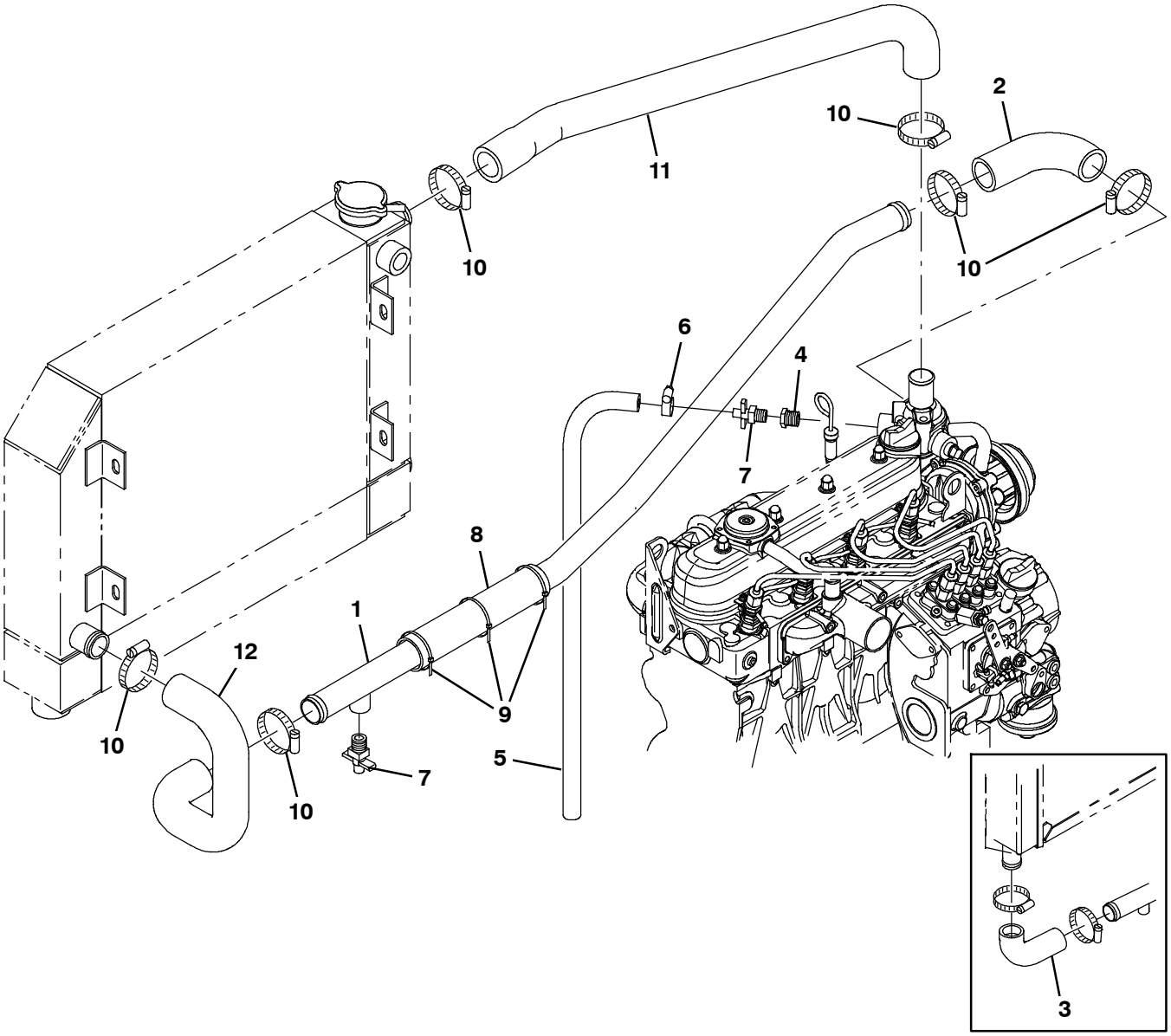

354770

Fig. 25 - Engine Radiator Hoses Group, Diesel

Ref.	Part No.	Serial Number	Description	Qty.
1	1031892	(000000-002099)	Tube, Coolant, Lower, Dsl	1
1	1059468	(002100-)	Tube, Coolant, Lower, Dsl [Roto-mold]	1
3	1038570	(000000-002099)	Hose, Rbr, E90, 1.25id 1.25id 04.2 02.6	1
2	1038570	(000000-)	Hose, Rbr, E90, 1.25id 1.25id 04.2 02.6	1
4	1016383	(000000-)	Fitting, Brs, Str, Pf04/Pm06	1
5	73471	(000000-)	Hose, Pvc, Clr, 0.38id 0.56od 022.0l	1
6	43844	(000000-)	Clamp, Hose, Wormdrive, 0.25-0.62d, .31w	1
7	54911-32	(000000-)	Fitting, Draincock, .25npt	2
8	762180	(000000-)	Guard, Hose, Rbr, 8.0l	1
9	44961	(000000-)	Tie, Cable, Nyl, 14.5l .30w 4.0 Max D	3
10	79381	(000000-)	Clamp, Hose, Wormdrive, 1.25-2.00d, .50w	6
11	1031820	(000000-)	Hose, Coolant, Upper, Dsl	1
12	1055029	(002100-)	Hose, Rbr, 1.25id 1.25id	1

Fig. 26 - Engine Radiator Mount and Fan Group (000000-002099)

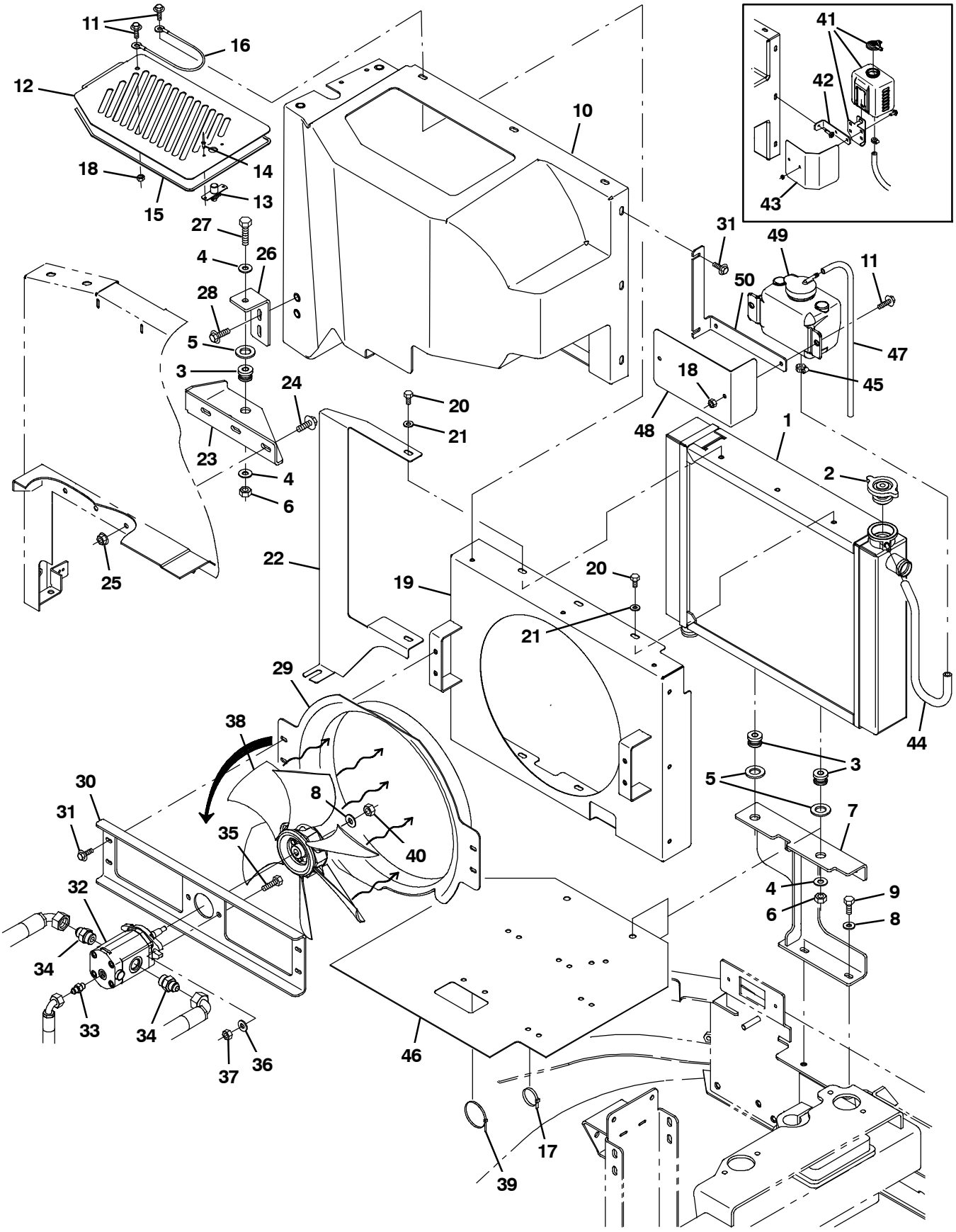

354669 - D

Fig. 26 - Engine Radiator Mount and Fan Group (000000-002099)

Ref.	Part No.	Serial Number	Description	Qty.
1	1041839	(000000-002099)	Radiator [Cross-Flow]	1
2	1045764	(000000-002099)	Cap, Radiator, 14psi [Stant Ao-2516]	1
3	54274	(000000-002099)	Isolator, Vib, Bshg, 1.1d 0.6l .4b 0.78h	3
4	32492	(000000-002099)	Washer, Flat, 0.38, Std	4
5	39350	(000000-002099)	Washer, Flat, 0.75, Sae	3
6	41430	(000000-002099)	Nut, Hex, Lock, M10 X 1.5, Nl	3
7	1027589	(000000-002099)	Bracket Wldt, Mtg, Radiator	1
8	32491	(000000-002099)	Washer, Flat, 0.31, Std	3
9	39277	(000000-002099)	Screw, Hex, M8 X 1.25 X 25, 8.8	2
10	1030572	(000000-002099)	Shroud, Cooling	1
11	1040467	(000000-002099)	Screw, Hex, M6 X 1.0 X 20, 9.8, Sems	12
12	1057999	(000000-002099)	Door, Access	1
13	140962	(000000-002099)	Latch, Cmpr, Spring, Knurled Knob, Pl	1
14	34738	(000000-002099)	Rivet, Blind, .125d X 0.32 X .25d, Stl	2
15	1044391	(000000-002099)	Seal, Rbr, Open, 0.12, 0.25w 27.4l Adh	1
16	19676	(000000-002099)	Cable, Glv .09d 013.0l .38eye /.38eye	1
17	49266	(000000-002099)	Tie, Cable, Nyl, 07.3l .19w 1.8 Max D	5
18	08708	(000000-002099)	Nut, Hex, Lock, M6 X 1.00, Nl	3
19	1030475	(000000-002099)	Shroud Wldt, Radiator	1
20	06941	(000000-002099)	Screw, Hex, M6 X 1.00 X 10, 8.8	6
21	32490	(000000-002099)	Washer, Flat, 0.25, Std	6
22	1030626	(000000-002099)	Plate, Filler	1
23	1034547	(000000-002099)	Bracket, Mtg, Fan Shrd	1
24	1037346	(000000-002099)	Screw, Hex, M8 X 1.25 X 25, 9.8, Sems	2
25	07791	(000000-002099)	Nut, Hex, Flng, M8 X 1.25	2
26	1043759	(000000-002099)	Bracket, Mtg, Cooling Shrd	1
27	06962	(000000-002099)	Screw, Hex, M10 X 1.50 X 45, 8.8	1
28	1037354	(000000-002099)	Screw, Hex, M8 X 1.25 X 30, 9.8, Sems	2
29	9006886	(000000-001891)	Shroud Kit, Fan, Afmkt	1
29	1054428	(001892-002099)	Shroud, Fan	1
30	1030306	(000000-002099)	Channel, Mtg, Fan Motor	1
31	1036892	(000000-002099)	Screw, Hex, M6 X 1.00 X 25, 9.8 Sems	5
32	1031026	(000000-002099)	Motor, Hyd, Gear, Ext 0.67 Rh 2500	1
33	55586	(000000-002099)	Fitting, Hyd, Str, Jm04/Om04	1
34	56692	(000000-002099)	Fitting, Hyd, Str, Jm08/Om10	2
35	76570	(000000-002099)	Screw, Hex, M8 X 1.25 X 30, 8.8	2
36	39349	(000000-002099)	Washer, Flat, 0.31, Sae	2
37	08709	(000000-002099)	Nut, Hex, Lock, M8 X 1.25, Nl	2
38	1031566	(000000-002099)	Fan, Cooling, 14.1d, 6 Blade, 0.5b Taper	1
39	49263	(000000-002099)	Tie, Cable, Nyl, 11.4l .19w 3.0 Max D	1
40	32960	(000000-002099)	Nut, Hex, Lock, .31-24, Nl	1
41	1023853	(000000-002003)	Tank, Coolant, 03.30w 4.7hi 04.7l,1liter	1
42	1031027	(000000-002003)	Bracket, Mtg, Tank	1
43	1043896	(000000-002003)	Shield, Heat	1
44	381391	(000000-002099)	Hose, Drain, Overflow, Radiator	1
45	43844	(000000-002099)	Clamp, Hose, Wormdrive, 0.25-0.62d, .31w	1
46	1044229	(000000-002099)	Skirt, Neo, .06, 20.00w 20.00l (S30 and XP only)	1
46	1045024	(000000-002099)	Skirt, Neo, .06, 20.00w 20.00l (S30 X4 only)	1
47	87738	(000000-002099)	Hose, Fuel, 0.18id, 29.0l	1
48	1056406	(002004-002099)	Shield, Heat, Tank [Gm 2010]	1
49	1054382	(002004-002099)	Tank, Coolant, 03.6w 04.1hi 05.5l,1liter	1
50	1056407	(002004-002099)	Bracket, Mtg, Tank [Gm 2010]	1

Fig. 27 - Engine Radiator Mount and Fan Group (002100-)

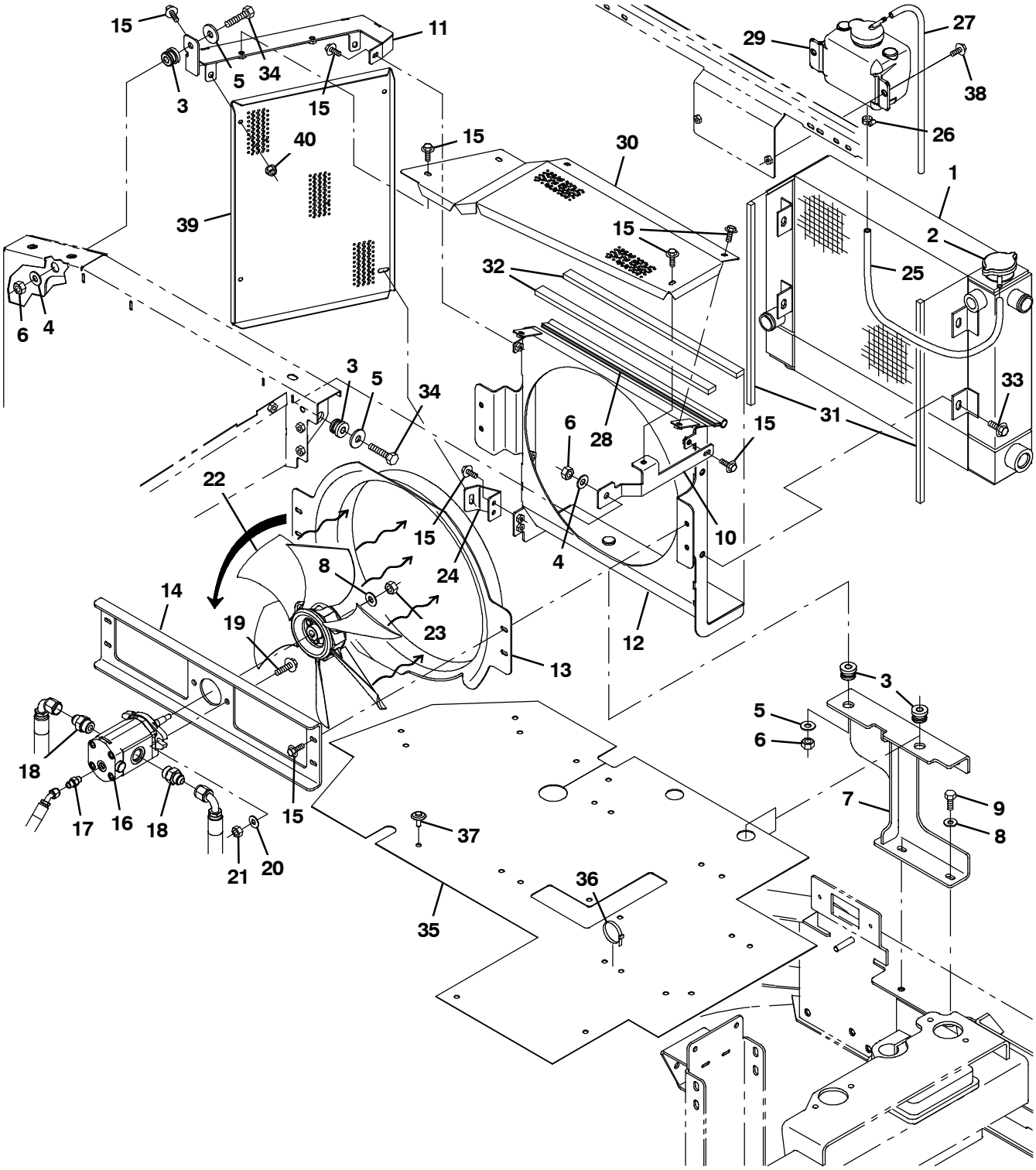

356056 - D

Fig. 27 - Engine Radiator Mount and Fan Group (002100-)

Ref.	Part No.	Serial Number	Description	Qty.
1	1051863	(002100-)	Radiator, W/ Hyd Cooler [Side X Side]	1
2	1045764	(002100-)	Cap, Radiator, 14psi [Stant Ao-2516]	1
3	54274	(002100-)	Isolator, Vib, Bshg, 1.1d 0.6l .4b 0.78h	4
4	32492	(002100-)	Washer, Flat, 0.38, Std	2
5	1014563	(002100-)	Washer, Flat, 0.40b 1.12d .12, Ss	3
6	41430	(002100-)	Nut, Hex, Lock, M10 X 1.5, Nl	4
7	1027589	(002100-)	Bracket Wldt, Mtg, Radiator	1
8	32491	(002100-)	Washer, Flat, 0.31, Std	3
9	39277	(002100-)	Screw, Hex, M8 X 1.25 X 25, 8.8	2
10	1058670	(002100-)	Bracket, Sppt, Radiator	1
11	1058404	(002100-)	Bracket Wldt, Sppt, Radiator, Rh	1
12	1055564	(002100-)	Bracket Wldt, Radiator (S30 and XP only)	1
12	1052552	(002100-)	Bracket Wldt, Radiator (S30 X4 only)	1
13	1054428	(002100-)	Shroud, Fan	1
14	1060343	(002100-)	Bracket Wldt, Mtg, Motor (S30 and XP only)	1
14	1030306	(002100-)	Channel, Mtg, Fan Motor (S30 X4 only)	1
15	1036892	(002100-)	Screw, Hex, M6 X 1.00 X 25, 9.8 Sems	15
16	1031026	(002100-)	Motor, Hyd, Gear, Ext 0.67 Rh 2500	1
17	55586	(002100-002999)	Fitting, Hyd, Str, Jm04/Om04	1
17	762428	(003000-)	Fitting, Hyd, Str, Fm04/Om04	1
18	56692	(002100-002999)	Fitting, Hyd, Str, Jm08/Om10	2
18	762456	(003000-)	Fitting, Hyd, Str, Fm08/Om10	2
19	1037355	(002100-)	Screw, Hex, M8 X 1.25 X 35, 9.8, Sems	2
20	39349	(002100-)	Washer, Flat, 0.31, Sae	2
21	08709	(002100-)	Nut, Hex, Lock, M8 X 1.25, Nl	2
22	1031566	(002100-)	Fan, Cooling, 14.1d, 6 Blade, 0.5b Taper	1
23	32960	(002100-)	Nut, Hex, Lock, .31-24, Nl	1
24	1055002	(002100-)	Bracket, Mtg, Condenser	1
25	381391	(002100-)	Hose, Drain, Overflow, Radiator	1
26	43844	(002100-)	Clamp, Hose, Wormdrive, 0.25-0.62d, .31w	1
27	87738	(002100-)	Hose, Fuel, 0.18id, 29.0l	1
28	1031623	(002100-)	Seal, Afmkt, Bulb, Str, .50d F/11ga 02ft	1
29	1054382	(002100-)	Tank, Coolant, 03.6w 04.1hi 05.5l,1liter	1
30	1059052	(002100-)	Guard, Fan	1
31	1015205	(002100-)	Seal, Afmkt, Ure, Adh, 0.38, 0.38w 02ft	2
32	1015314	(002100-)	Seal, Afmkt, Bulb, Adh 0.38, 0.75w 02ft	2
33	1037346	(002100-)	Screw, Hex, M8 X 1.25 X 25, 9.8, Sems	4
34	06962	(002100-)	Screw, Hex, M10 X 1.50 X 45, 8.8	1
35	1061498	(002100-)	Skirt, Neo, .06, 30.00w 41.00l [3 Wheel] (S30 and XP only)	1
35	1061503	(002100-)	Skirt, Neo, .06, 30.00w 41.00l [4 Wheel] (S30 X4 only)	1
36	49266	(002100-)	Tie, Cable, Nyl, 07.3l .19w 1.8 Max D	8
37	72968	(002100-)	Rivet, Plstc, .250d X 0.90	3
38	1040467	(002100-)	Screw, Hex, M6 X 1.00 X 20, 9.8, Sems	2
39	1060009	(002100-)	Guard, Fan	1
40	07790	(002100-)	Nut, Hex, Flng, M6 X 1.00	3

Fig. 28 - Wheel Group, Rear Drive S30 and XP

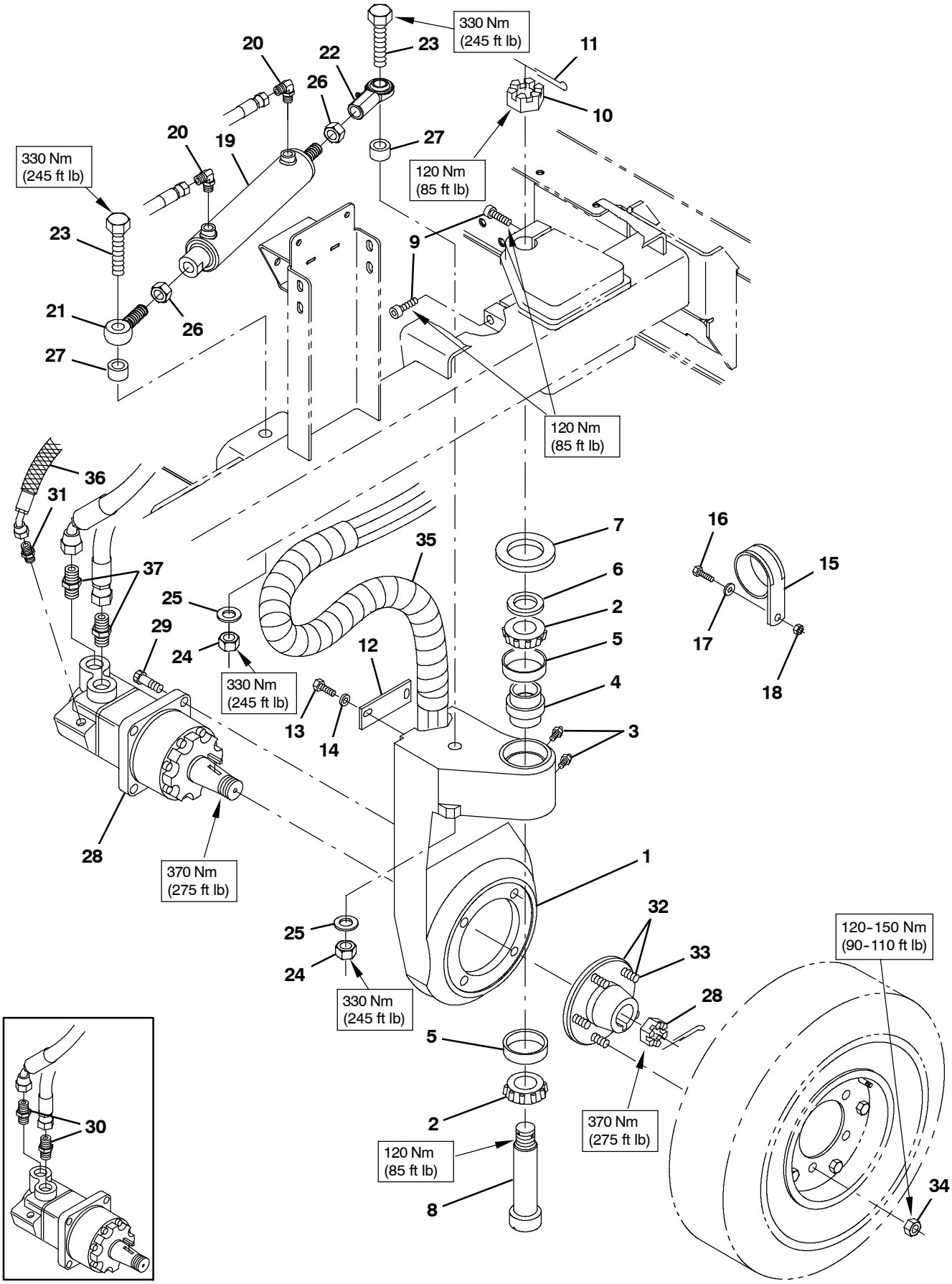

354685

Fig. 28 - Wheel Group, Rear Drive S30 and XP

	Ref.	Part No.	Serial Number	Description	Qty.
	1	1071053	(000000-)	Housing, Sppt, Drive	1
	2	51339	(000000-)	Bearing, Cone, 1.38b 0.71w	2
	3	47801	(000000-)	Fitting, Grease, Str Pm04 .63l	2
	4	374560	(000000-)	Seal, Drive, Rear, Grease Cav	1
	5	51338	(000000-)	Bearing, Cup, 2.56d 0.55w	2
	6	54051	(000000-)	Washer, Flat, 1.39b 2.12d .13, Stl	1
	7	374563	(000000-)	Washer, Flat, 2.16b 3.50d .16, Felt	1
	8	73281	(000000-)	Bolt, Shld, 1.37d X 5.13l,1.1-18 Drilled	1
	9	72926	(000000-)	Screw, Soc, M16 X 2.00 X 50, 12.9	2
	10	54052	(000000-)	Nut, Hex, Sltd, 1.12-18	1
	11	08329	(000000-)	Pin, Cotter, .125 X 2.50	1
	12	58842	(000000-)	Bar, Flat, Stl 0.19, 01.50 X 04.1l	1
	13	09011	(000000-)	Screw, Hex, M8 X 1.25 X 30, Ss	2
	14	32491	(000000-)	Washer, Flat, 0.31, Std	2
	15	70157	(000000-)	Clamp, Cable, Ss, 2.50d X 1.00w, 1hole	1
	16	09740	(000000-)	Screw, Hex, M8 X 1.25 X 20, Ss	1
	17	39349	(000000-)	Washer, Flat, 0.31, Sae	1
	18	07791	(000000-)	Nut, Hex, Flng, M8 X 1.25	1
▽	19	1028492	(000000-)	Cylinder, Hyd, 2.0b 15.0l 08.00strk 1500	1
▲		373698	(000000-)	Seal Kit	1
	20	56820	(000000-002999)	Fitting, Hyd, E90, Jm06/Om06	2
	20	762432	(003000-)	Fitting, Hyd, E90, Fm06/Om06	2
	21	64886	(000000-)	Rod-End, 0.75-16rh Mal 0.75b [Teflon]	1
	22	1042515	(000000-)	Rod-End, 0.75-16rh Fem 0.75b Zerk	1
	23	77345	(000000-)	Screw, Hex, .75-10 X 3.25, G5	2
	24	32987	(000000-)	Nut, Hex, Std, .75-10	2
	25	39350	(000000-)	Washer, Flat, 0.75, Sae	2
	26	32987	(000000-)	Nut, Hex, Lock, .75-10, Nl	2
	27	1034806	(000000-)	Tube, 0.77id 1.75od 00.7l, Stl, Pntd	2
	28	1027756	(000000-001802)	Motor, Hyd, Gear, Int 15.0 Bi-Dir 3000 (See Breakdowns)	1
	28	1054901	(001803-)	Motor, Hyd, Gear, Int 17.1 Bi-Dir 3000 (See Breakdowns)	1
	29	19583	(000000-)	Screw, Soc, .50-13 X 1.50, Al	4
	30	9008697	(000000-002687)	Hose Kit, Rear Drive, Replmt	1
	31	55685	(000000-002999)	Fitting, Hyd, Str, Jm04/Om06	1
	31	762426	(003000-)	Fitting, Hyd, Str, Fm04/Om06	1
▽	32	54087	(000000-)	Hub Assy, Wheel, 5 Bolt 4.50bc Taper B	1
▲	33	32126	(000000-)	Stud, Wheel, .50-20 X 1.50l, 0.370th	5
	34	24339	(000000-)	Nut, Wheel, .50-20 X 60 Angle	5
	35	1041393	(000000-)	Guard, Hose, Wrap, Plstc, 37.0	1
	36	57315	(000000-)	Sleeve, Nyl, 2.38id 05.0l	1
	37	762468	(002688-)	Fitting, Hyd, Str, Fm10/Om12	2

Fig. 29 - Wheel Group, Rear Drive, S30 X4

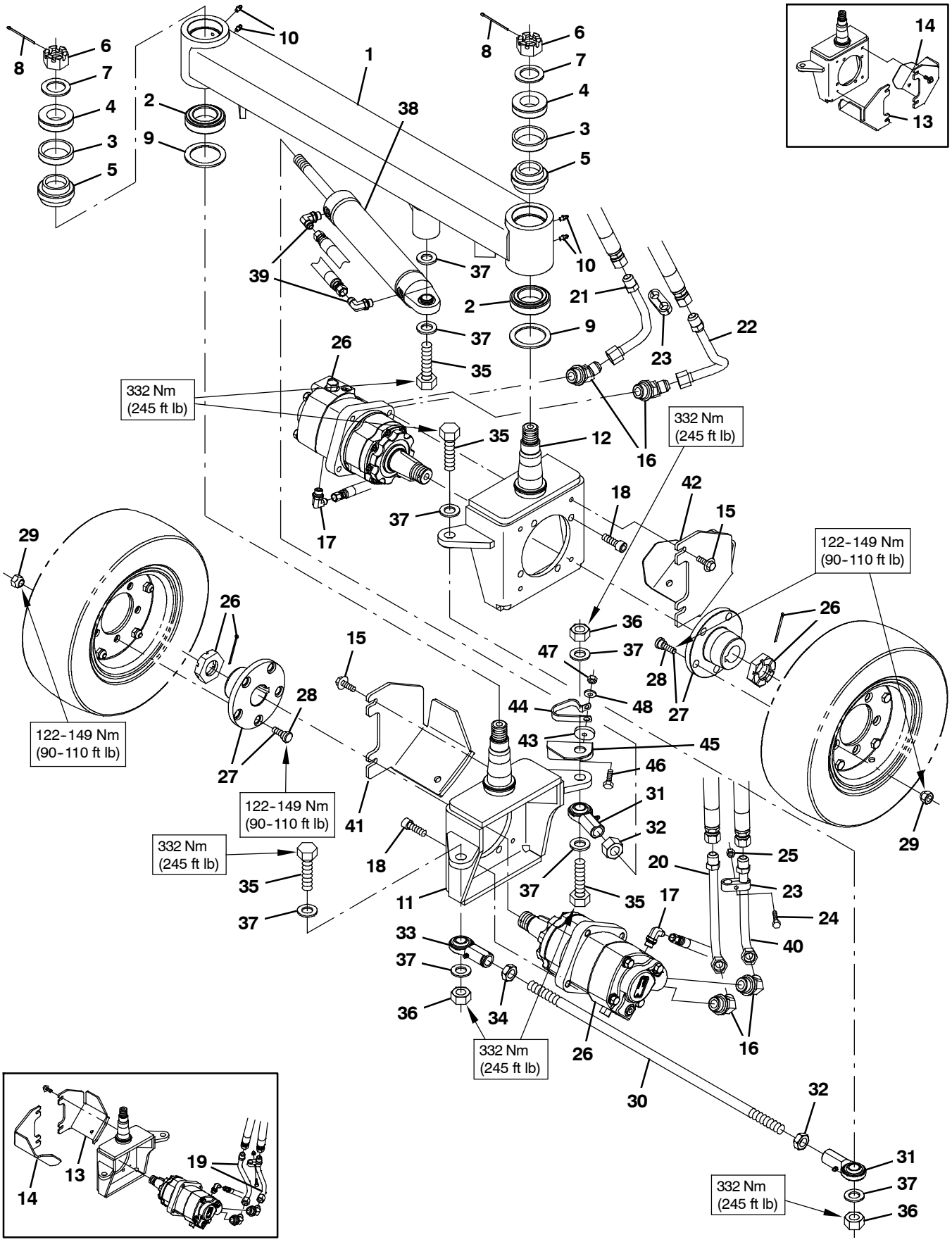

354756

Fig. 29 - Wheel Group, Rear Drive, S30 X4

	Ref.	Part No.	Serial Number	Description	Qty.
	1	1022569	(000000-)	Axle Wldt, Rear, 4 Wheel	1
	2	1035922	(000000-)	Bearing Assy, Cup / Cone, 45mmb	2
	3	51338	(000000-)	Bearing, Cup, 2.56d 0.55w	2
	4	51339	(000000-)	Bearing, Cone, 1.38b 0.71w	2
	5	1041558	(000000-)	Seal, Cavity, Grease, 4 Wheel	2
	6	54052	(000000-)	Nut, Hex, Sltd, 1.12-18	2
	7	54051	(000000-)	Washer, Flat, 1.39b 2.12d .13, Stl	2
	8	08329	(000000-)	Pin, Cotter, .125 X 2.50	2
	9	1034943	(000000-)	Washer, Flat, 2.24b 3.03d .12, Ni	2
	10	47801	(000000-)	Fitting, Grease, Str Pm04 .63l	4
	11	1023862	(000000-)	Housing Wldt, Sppt, Drive, Rh	1
	12	1032393	(000000-)	Housing Wldt, Sppt, Drive, Lh	1
	13	1037082	(000000-001628)	Guard, Rear, Rh [4-Wheel]	2
	14	1037098	(000000-001628)	Guard, Rear, Lh [4-Wheel]	2
	15	1037358	(000000-)	Screw, Hex, M10 X 1.50 X 35, 9.8, Sems	8
	16	1024249	(000000-)	Fitting, Hyd, E45, Jm10/Om12	4
	17	47638	(000000-002999)	Fitting, Hyd, E90, Jm04/Om06	2
	17	762427	(003000-)	Fitting, Hyd, E90, Fm04/Om06	2
	18	19583	(000000-)	Screw, Soc, .50-13 X 1.50, Al	8
	19	9006789	(000000-001628)	Wheel Kit, Rh, Replmt [4x]	1
	20	1047806	(001629-)	Tube, Hyd, Right Outside	1
	21	1032993	(000000-)	Tube Assy, Hyd, Motor [Lh-Inner]	1
	22	1032995	(000000-)	Tube Assy, Hyd, Motor [Lh-Outer]	1
	23	1033034	(000000-)	Clamp, Tube, 0.63d 0.63d, 2 Hole	2
	24	06945	(000000-)	Screw, Hex, M6 X 1.00 X 30, 8.8	2
	25	08708	(000000-)	Nut, Hex, Lock, M6 X 1.00, Nl	2
	26	1044109	(000000-)	Motor, Hyd, Gear, Int 07.9 Bi-Dir 3000	2
▽	27	54087	(000000-)	Hub Assy, Wheel, 5 Bolt 4.50bc Taper B	2
▲	28	54086	(000000-)	Stud, Wheel, .50-20 X 1.50l, 0.297th	5
	29	24339	(000000-)	Nut, Wheel, .50-20 X 60 Angle	10
	30	1027079	(000000-)	Rod, Tie, 4 Wheel	1
	31	1042515	(000000-)	Rod-End, 0.75-16rh Fem 0.75b Zerk	2
	32	35886	(000000-)	Nut, Hex, Jam, .75-16	2
	33	1028094	(000000-)	Rod-End, 0.75-16lh Fem 0.75b Zerk	1
	34	1028190	(000000-)	Nut, Hex, Jam, .75-16, Lh	1
	35	58056	(000000-)	Screw, Hex, .75-10 X 3.00, G5	4
	36	32987	(000000-)	Nut, Hex, Lock, .75-10, Nl	3
	37	39350	(000000-)	Washer, Flat, 0.75, Sae	8
	38	1032456	(000000-)	Cylinder, Hyd, 2.0b 16.8l 09.50strk 3000	1
	39	56820	(000000-002999)	Fitting, Hyd, E90, Jm06/Om06	2
	39	762432	(003000-)	Fitting, Hyd, E90, Fm06/Om06	2
	40	1047720	(001629-)	Tube, Hyd, Right Inside	1
	41	1047929	(001629-)	Guard, Rear, Rh [4-Wheel]	1
	42	1048072	(001629-)	Guard, Rear, Lh [4-Wheel]	1
	43	1048084	(001629-)	Spacer, 0.35b, 1.50d, 0.25l, Pl	1
	44	09570	(001629-)	Clamp, Cable, Stl, 0.9x1.8x0.62w, 1hole	1
	45	1048061	(001629-)	Bracket, Support, Tube	1
	46	39277	(001629-)	Screw, Hex, M8 X 1.25 X 25, 8.8	1
	47	07791	(001629-)	Nut, Hex, Flng, M8 X 1.25	1
	48	32491	(001629-)	Washer, Flat, 0.31, Std	1

Fig. 30 - Wheel Suspension Group, Rear Drive, S30 X4

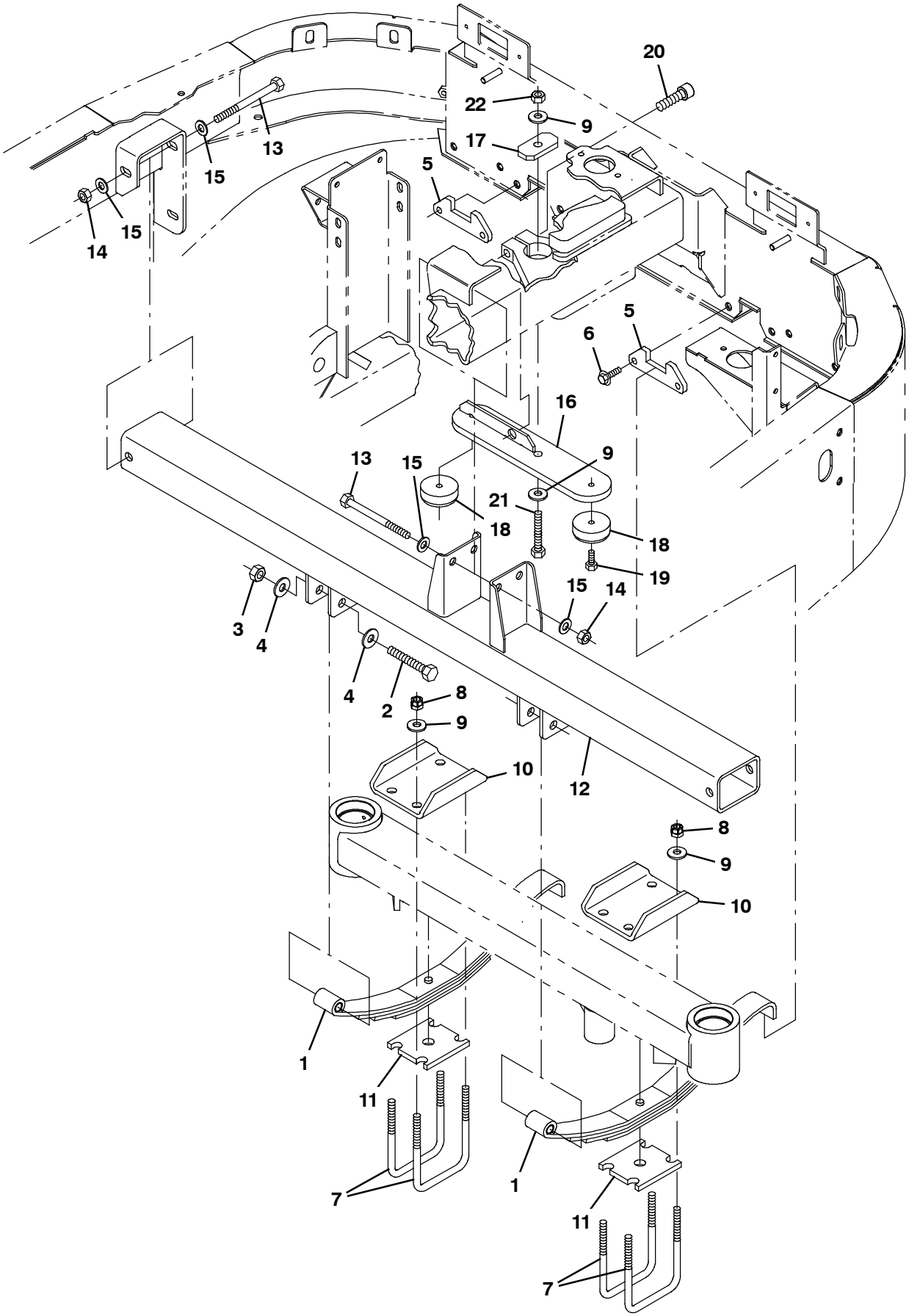

354762

Fig. 30 - Wheel Suspension Group, Rear Drive, S30 X4

Ref.	Part No.	Serial Number	Description	Qty.
1	1026833	(000000-)	Spring, Leaf, 21.5inch [Slipper]	2
2	1035488	(000000-)	Screw, Hex, M14 X 2.00 X 90, 8.8	2
3	41517	(000000-)	Nut, Hex, Lock, M14 X 2.00, Nl	2
4	41619	(000000-)	Washer, Flat, 0.56b 1.38d .11, Ss	4
5	1035138	(000000-)	Plate, Retainer, Leaf Spring	2
6	1037358	(000000-)	Screw, Hex, M10 X 1.50 X 35, 9.8, Sems	4
7	1027317	(000000-)	Bolt, U, .50-20 X 6.00, 4.13id	4
8	31701	(000000-)	Nut, Hex, Flexlock, .50-20	8
9	36328	(000000-)	Washer, Flat, Belleville, .50	10
10	1027293	(000000-)	Plate, Spring, U Bolt, Upper	2
11	1027332	(000000-)	Plate, Spring, U Bolt, Lower	2
12	1026019	(000000-)	Frame Wldt, Crossmember, 4 Wheel	1
13	383255	(000000-)	Screw, Hex, M12 X 1.75 X 140, 8.8	4
14	08711	(000000-)	Nut, Hex, Lock, M12 X 1.75, Nl	4
15	32486	(000000-)	Washer, Flat, 0.50, Sae	8
16	1039286	(000000-)	Stop Wldt, Suspension, 4 Wheel	1
17	1039327	(000000-)	Bar, Flt, Stl 0.38, 01.50 X 03.0l, 1/.6h	1
18	369481	(000000-)	Bumper, Rbr, 2.5d X 1.00	2
19	39283	(000000-)	Screw, Hex, M10 X 1.50 X 25, 8.8	2
20	72926	(000000-)	Screw, Soc, M16 X 2.00 X 50, 12.9	1
21	06974	(000000-)	Screw, Hex, M12 X 1.75 X 80, 8.8	1
22	39313	(000000-)	Nut, Hex, Std, M12 X 1.75	1

Fig. 31 - Wheel Assembly, Rear, S30 and XP

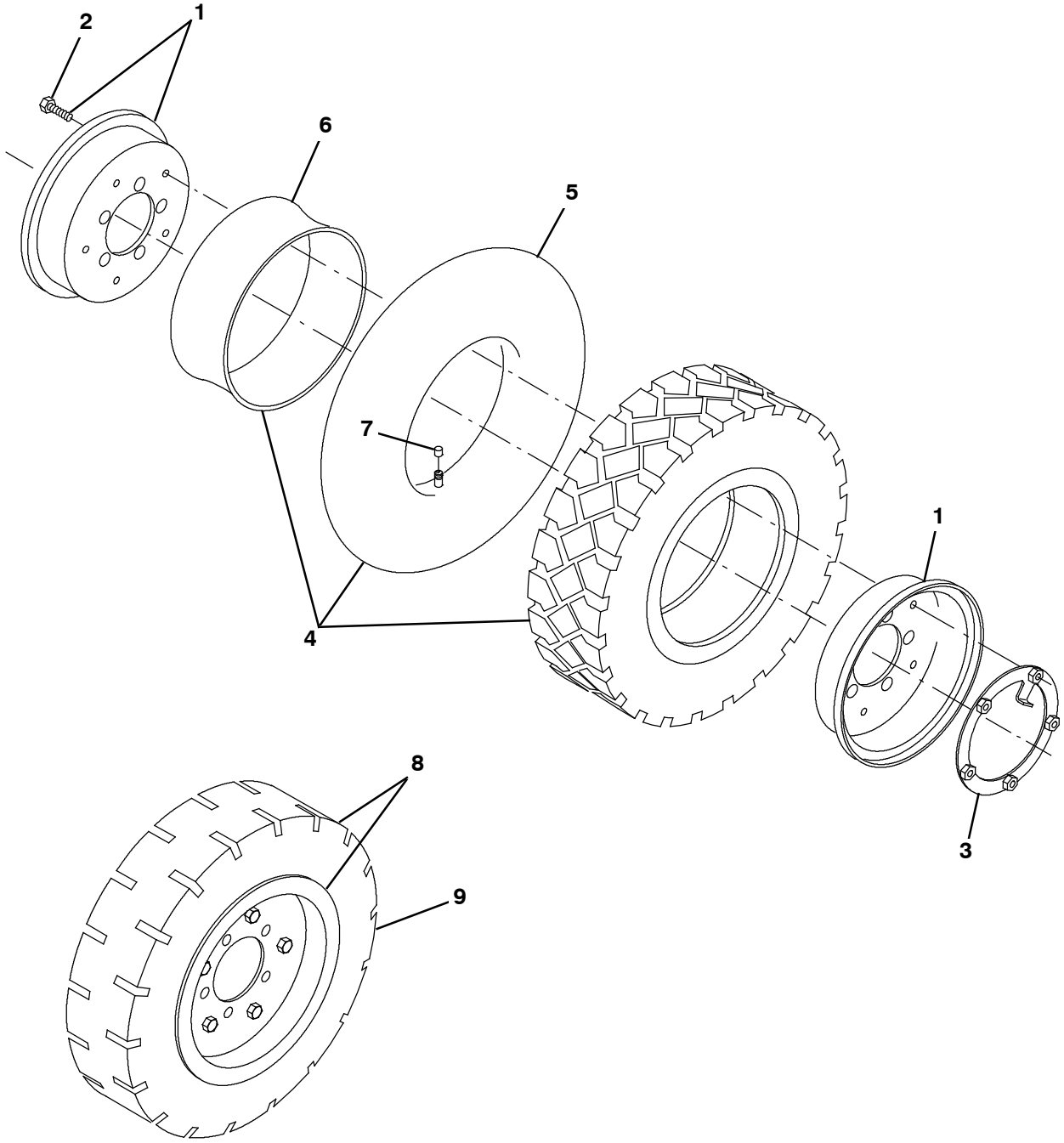

354702

	Ref.	Part No.	Serial Number	Description	Qty.
▽		1005229	(000000-)	Tire Assy, Pneu, 570/500-08 4.5bc 5bolt (Standard)	1
▲▽	1	53818	(000000-)	Rim Assy, 08.0 X 3.8, 4.5bc /5bolt	1
▲▲	2	370181	(000000-)	Screw, Hex, M10 X 1.50 X 25, 10.9	5
▲	3	99997	(000000-)	Plate, Lock Plate	1
▲▽	4	53819	(000000-)	Tire, W/ Tube, W/ Flap	1
▲▲	5	70280	(000000-)	Innertube, Valve [5.00r-8, Js2, 500-8]	1
▲▲	6	53819-2	(000000-)	Flap, Tire/Tube, 570/500-8	1
▲▲	7	45786	(000000-)	Cap, Valve, Tire, Tubeless [Schrader]	1
▽	8	53817	(000000-)	Tire Assy, Solid, 18.0 X 4.3 4.5bc 5bolt (Option)	1
▲	9	53816	(000000-)	Tire, Solid, 18.0 X 7.0 X 8.0[4.33 Sc15]	1

Fig. 32 - Wheel Assembly, Rear, S30 X4

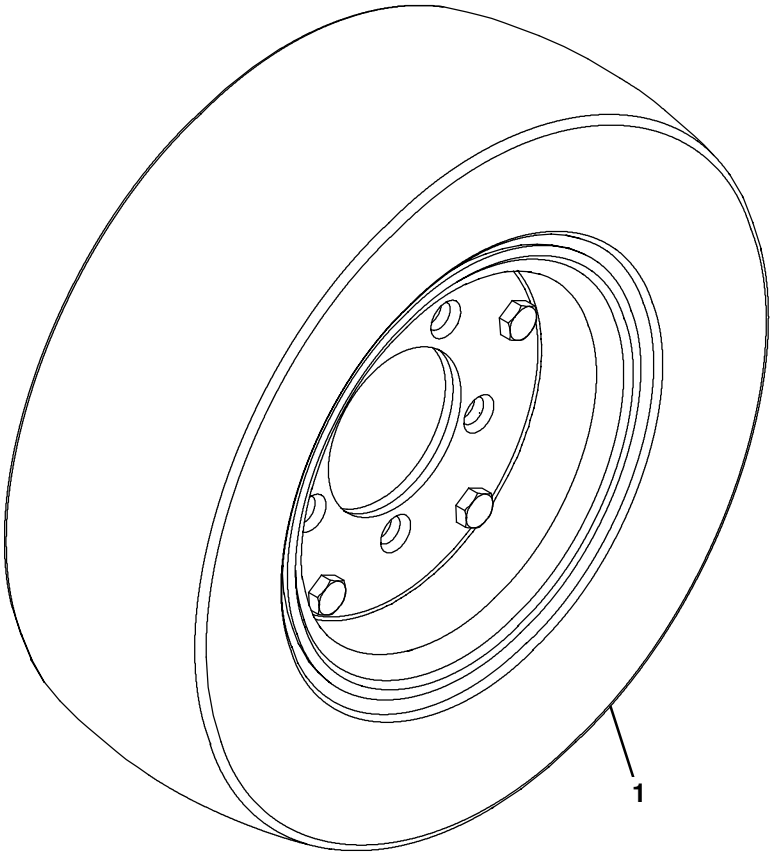

354805

Ref.	Part No.	Serial Number	Description	Qty.
1	1053523	(000000-)	Tire Assy, Foam-filled, 125/75-08 5bolt (Standard)	1

Fig. 33 - Wheel and Brakes Group, Front Solid (Standard)

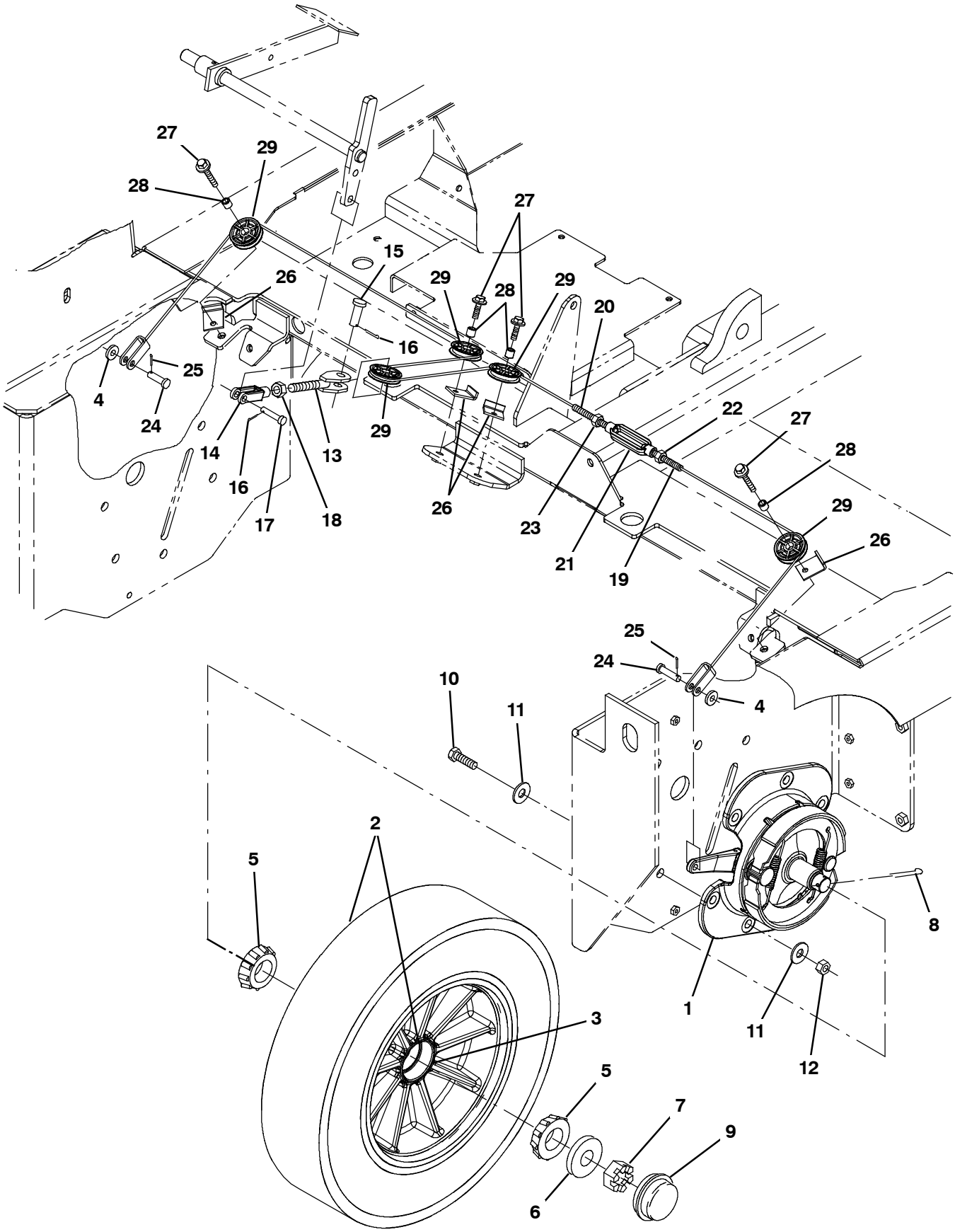

354686

Fig. 33 - Wheel and Brakes Group, Front Solid (Standard)

	Ref.	Part No.	Serial Number	Description	Qty.
▽	1	54577	(000000-)	Brake Assy, Drum, Mech, 07.9d [6600]]	2
▲		66211	(000000-)	Shoe Set, Brake [1 Set=1pkg=2 Shoes]	2
▲▽		66213	(000000-)	Brake Kit, Repair	1
▲▲		70161	(000000-)	Shaft	1
▲		70158	(000000-)	Spring	2
▽	2	1061961	(000000-)	Tire Assy, Solid, 20.8 X 5.0, W/ Brg	2
▲	3	51338	(000000-)	Bearing, Cup, 2.56d 0.55w	2
	4	32485	(000000-)	Washer, Flat, 0.38, Sae	2
	5	51339	(000000-)	Bearing, Cone, 1.38b 0.71w	4
	6	32598	(000000-)	Washer, Flat, 1.02b 1.75d .12, Stl	2
	7	14242	(000000-)	Nut, Hex, Sltd, 1.00-20	2
	8	08202	(000000-)	Pin, Cotter, .125 X 1.75	2
	9	54390	(000000-)	Cap, Hub, Dust, 2.57d 0.77l	2
	10	06969	(000000-)	Screw, Hex, M12 X 1.75 X 40, 8.8	12
	11	32486	(000000-)	Washer, Flat, 0.50, Sae	24
	12	08711	(000000-)	Nut, Hex, Lock, M12 X 1.75, Nl	12
	13	71373	(000000-)	Clevis Wldt, Adj, .50pin 0.50-20, Pl	1
	14	374710	(000000-)	Clevis, Adj, 0.38pin, 0.50-20thd	1
	15	58078	(000000-)	Pin, Clevis, 0.50d X 1.25l	1
	16	08182	(000000-)	Pin, Cotter, .125 X 1.00	2
	17	86240	(000000-)	Pin, Clevis, 0.38d X 1.13l	1
	18	48985	(000000-)	Nut, Hex, Jam, .50-20	1
	19	1034462	(000000-)	Cable, Brake	1
	20	1034455	(000000-)	Cable, Brake	1
	21	40352	(000000-)	Turnbuckle, Body, .38thread, 03.9l	1
	22	32522	(000000-)	Nut, Hex, Jam, .38-16	1
	23	39562	(000000-)	Nut, Hex, Jam, .38-16, Lh	1
	24	09088	(000000-)	Pin, Clevis, 0.37d X 1.00l	2
	25	39005	(000000-)	Pin, Cotter, .094 X 0.75	2
	26	54400	(000000-)	Bracket, Angle, Keeper, Cable	4
	27	1037355	(000000-)	Screw, Hex, M8 X 1.25 X 35, 9.8, Sems	4
	28	222460	(000000-)	Sleeve, P/M, 0.31b 0.50d 0.5l [430ss]	4
	29	369781	(000000-)	Pulley, Cable, 1.5d Nyl	5

Fig. 34 - Wheel and Brakes Group, Front Pneumatic (Option)

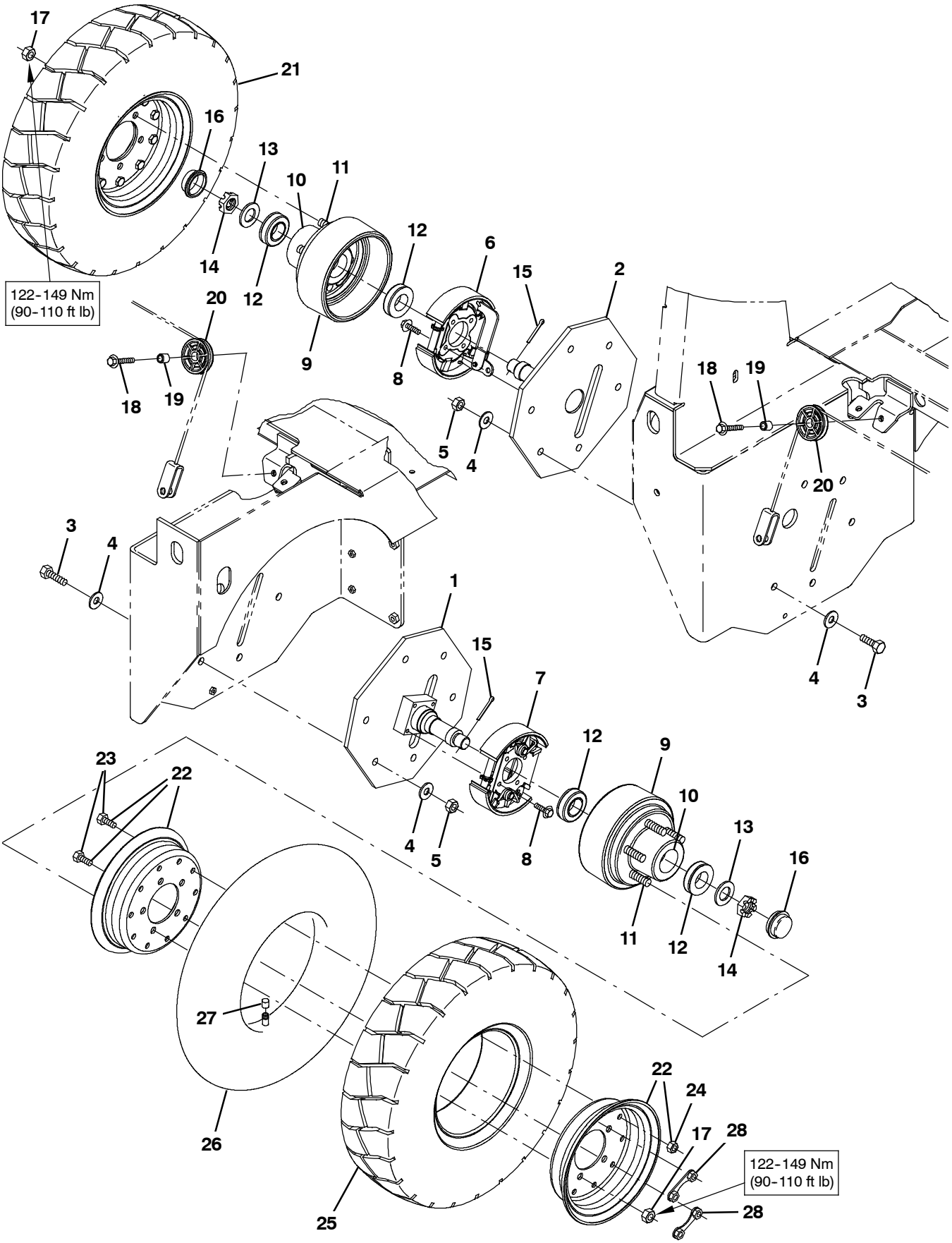

354687

Fig. 34 - Wheel and Brakes Group, Front Pneumatic (Option)

	Ref.	Part No.	Serial Number	Description	Qty.
	1	1028159	(000000-)	Spindle Wldt, Wheel, Front, Lh	1
	2	1028146	(000000-)	Spindle Wldt, Wheel, Front, Rh	1
	3	06969	(000000-)	Screw, Hex, M12 X 1.75 X 40, 8.8	12
	4	32486	(000000-)	Washer, Flat, 0.50, Sae	24
	5	08711	(000000-)	Nut, Hex, Lock, M12 X 1.75, Nl	12
▽	6	1026856	(000000-)	Brake, Knot, Rh, 7.0d	1
▲		9004865	(000000-)	Shoe Assy, Brake, 177.8 X 45	2
▲		9004867	(000000-)	Lever Assy, 177.8 X 45	1
▲		9004868	(000000-)	Spring, Tens, Brake	1
▲		9004870	(000000-)	Spring, Tors, 0.61id .18wir 02.0coil	1
▲		9004871	(000000-)	Adjuster Kit, Manual, W/ Pivot	1
▲		9004869	(000000-)	Spring, Tors, 0.61id .18wir 02.0coil	1
▲		9004873	(000000-)	Clip, Spring	2
▽	7	1026841	(000000-)	Brake, Knot, Lh, 7.0d	1
▲		9004865	(000000-)	Shoe Assy, Brake, 177.8 X 45	2
▲		9004867	(000000-)	Lever Assy, 177.8 X 45	1
▲		9004868	(000000-)	Spring, Tens, Brake	1
▲		9004870	(000000-)	Spring, Tors, 0.61id .18wir 02.0coil	1
▲		9004871	(000000-)	Adjuster Kit, Manual, W/ Pivot	1
▲		9004869	(000000-)	Spring, Tors, 0.61id .18wir 02.0coil	1
▲		9004873	(000000-)	Clip, Spring	2
	8	1037354	(000000-)	Screw, Hex, M8 X 1.25 X 30, 9.8, Sems	8
▽	9	1036027	(000000-)	Drum Assy, Brake	2
▲	10	51338	(000000-)	Bearing, Cup, 2.56d 0.55w	2
▲	11	67665	(000000-)	Stud, Wheel, .50-20 X 1.88l, 0.560th	5
	12	51339	(000000-)	Bearing, Cone, 1.38b 0.71w	4
	13	32598	(000000-)	Washer, Flat, 1.02b 1.75d .12, Stl	2
	14	14242	(000000-)	Nut, Hex, Sltd, 1.00-20	2
	15	08202	(000000-)	Pin, Cotter, .125 X 1.75	2
	16	54390	(000000-)	Cap, Hub, Dust, 2.57d 0.77l	2
	17	24339	(000000-)	Nut, Wheel, .50-20 X 60 Angle	10
	18	1037355	(000000-)	Screw, Hex, M8 X 1.25 X 35, 9.8, Sems	2
	19	222460	(000000-)	Sleeve, P/M, 0.31b 0.50d 0.5l [430ss]	2
	20	369781	(000000-)	Pulley, Cable, 1.5d Nyl	2
▽	21	1032515	(000000-)	Tire Assy, Pneu, 21 X 6.0-12 4.5bc, Ce	2
▲▽	22	1039523	(000000-)	Rim Assy, 09.0 X 4.0, 4.5bc /5bolt	1
▲▲	23	370181	(000000-)	Screw, Hex, M10 X 1.50 X 25, 10.9	10
▲▲	24	41430	(000000-)	Nut, Hex, Lock, M10 X 1.5, Nl	6
▲	25	1039520	(000000-)	Tire, Pneu, 21 X 6.0 X 9.0 12 Ply [Ic40]	1
▲	26	1039517	(000000-)	Innertube, 6.00 X 9.00 [Js-2]	1
▲	27	45786	(000000-)	Cap, Valve, Tire, Tubeless [Schrader]	1
▲	28	1032488	(000000-)	Plate, Wheel, Ce	2

Fig. 35 - Brake Pedal and Parking Brake Group

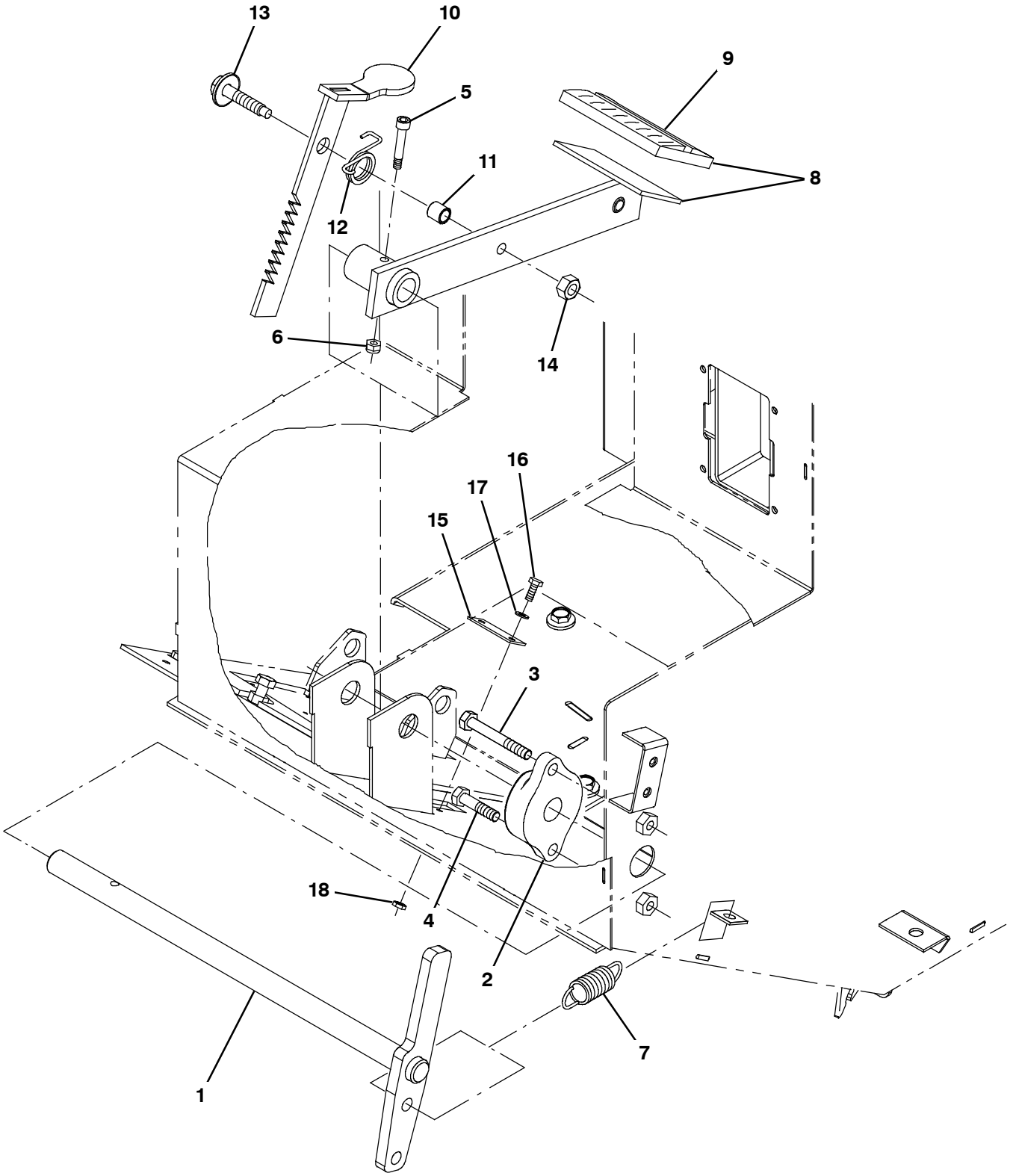

354688

Fig. 35 - Brake Pedal and Parking Brake Group

	Ref.	Part No.	Serial Number	Description	Qty.
	1	1026605	(000000-)	Rod Wldt, Brake	1
	2	26663	(000000-)	Bearing, Flng, 2hole, 0.75b	1
	3	363976	(000000-)	Screw, Hex, M8 X 1.25 X 60, 8.8, Fl	1
	4	39277	(000000-)	Screw, Hex, M8 X 1.25 X 25, 8.8	1
	5	31249	(000000-)	Bolt, Shld, .25d X 1.25, #10-24	1
	6	45181	(000000-)	Nut, Hex, Lock, #10-24, Nl	1
	7	87816	(000000-)	Spring, Extn, 0.75od 0.09wir 02.5l	1
▽	8	1026610	(000000-)	Pedal Wldt, Brake	1
▲	9	51109	(000000-)	Pad, Pedal, Brake, 3.96l 2.36w 0.75	1
	10	1042021	(000000-)	Brake Wldt, Parking	1
	11	46563	(000000-)	Bushing, Sleeve, 0.37b 0.50d 0.50l, Oib	1
	12	59009	(000000-)	Spring, Tors, 0.75id .06wir 02.8coil	1
	13	06955	(000000-)	Screw, Hex, M8 X 1.25 X 35, 8.8	1
	14	08709	(000000-)	Nut, Hex, Lock, M8 X 1.25, Nl	1
	15	1042024	(000000-)	Plate, Stop, Parking	1
	16	33928	(000000-)	Screw, Hex, M4 X 0.70 X 20, Ss	2
	17	19065	(000000-)	Washer, Flat, 08	2
	18	33932	(000000-)	Nut, Hex, Lock, M4 X 0.70, Nl, Ss	2

Fig. 36 - Directional Pedal Group

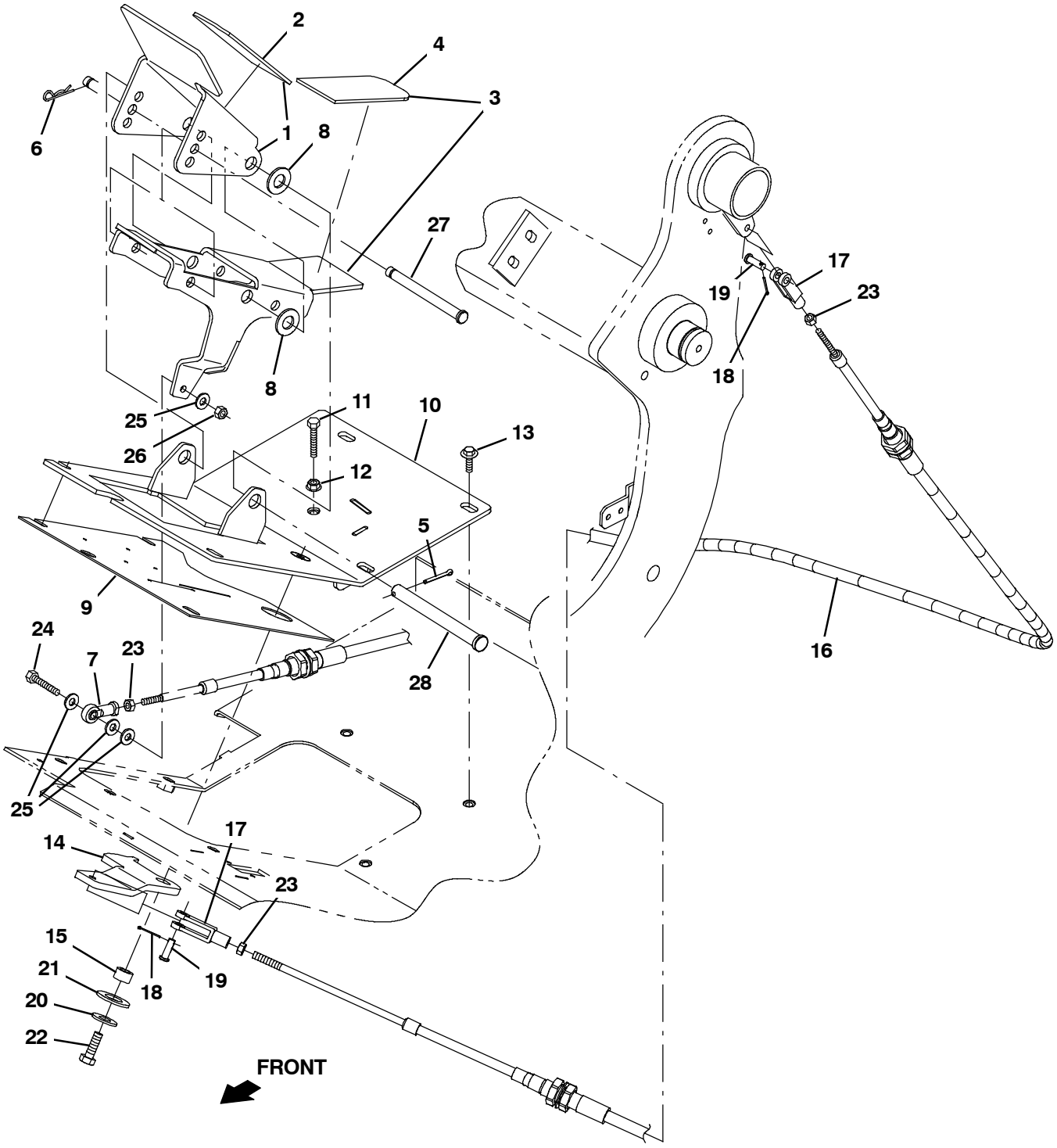

354718

Fig. 36 - Directional Pedal Group

	Ref.	Part No.	Serial Number	Description	Qty.
▽	1	9004575	(000000-)	Pedal, Propel, Upper, W/Tread	1
▲	2	82839	(000000-)	Tread, Non-Skid, 02.2w 11.5l	1
▽	3	9004574	(000000-)	Pedal, Propel, Lower, W/Tread	1
▲	4	82839	(000000-)	Tread, Non-Skid, 02.2w 11.5l	1
	5	08182	(000000-)	Pin, Cotter, .125 X 1.00	1
	6	86866	(000000-)	Pin, Cotter, Hair, 0.38d .072 Wir	1
	7	1033995	(000000-)	Rod-End, M6 X 1.0rh Fem 6mmb [Nylon]	2
	8	32486	(000000-)	Washer, Flat, 0.50, Sae	2
	9	1038360	(000000-)	Gasket, Rbr, Pedal, Propel	1
	10	1026688	(000000-)	Panel Wldt, Access	1
	11	76570	(000000-)	Screw, Hex, M8 X 1.25 X 30, 8.8	1
	12	07791	(000000-)	Nut, Hex, Flng, M8 X 1.25	1
	13	1037346	(000000-)	Screw, Hex, M8 X 1.25 X 25, 9.8, Sems	6
	14	1034910	(000000-)	Link, Crank, Limiter	1
	15	1040761	(000000-)	Bushing, Sleeve, 0.31b 0.55d 0.38l, Oib	1
	16	1035620	(000000-)	Cable, Push / Pull, 070.4l M6x1.0/M6x1.0	1
	17	1035826	(000000-)	Clevis, Adj, M6 Pin, M6 X 1.0 Rh, Pl	2
	18	08178	(000000-)	Pin, Cotter, .062 X 0.75	2
	19	14605	(000000-)	Pin, Clevis, 0.25d X 0.75l	2
	20	32492	(000000-)	Washer, Flat, 0.38, Std	1
	21	15331	(000000-)	Washer, Flat, 0.62, Sae	1
	22	09010	(000000-)	Screw, Hex, M8 X 1.25 X 25, Ss	1
	23	41359	(000000-)	Nut, Hex, Std, M6 X 1.00, 8	3
	24	09007	(000000-)	Screw, Hex, M6 X 1.00 X 25, Ss	1
	25	01684	(000000-)	Washer, Flat, 0.27b 0.69d .05, Ss	4
	26	08712	(000000-)	Nut, Hex, Lock, M6 X 1.00, Nl, Ss	1
	27	1040162	(000000-)	Pin, Clevis, 0.37d X 4.33l	1
	28	51538	(000000-)	Pin, Clevis, 0.50d X 5.00l	1

Fig. 37 - Hydraulic Pump Linkage Group, S30 and XP

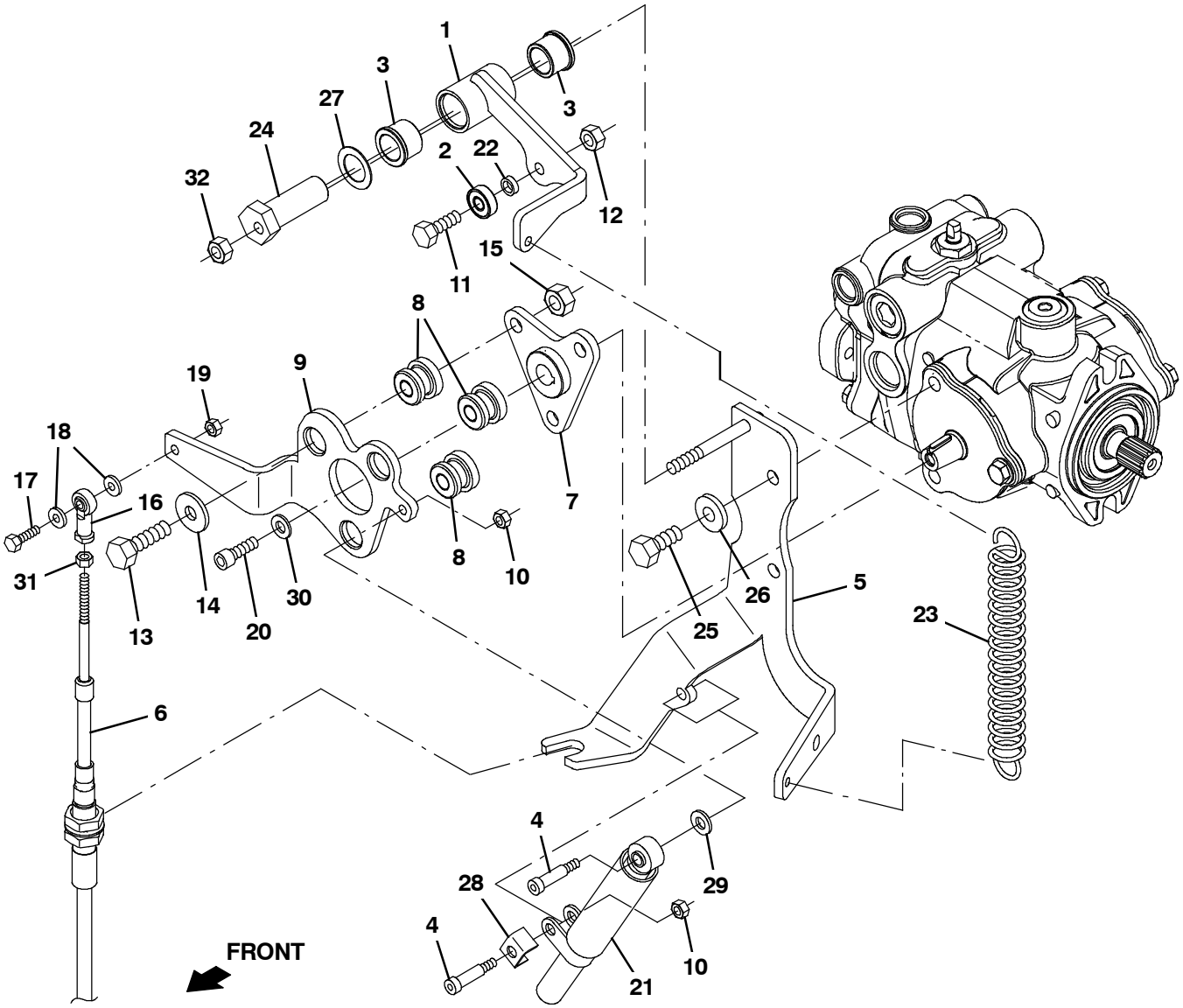

354713

Fig. 37 - Hydraulic Pump Linkage Group, S30 and XP

Ref.	Part No.	Serial Number	Description	Qty.
1	1031921	(000000-)	Arm Wldt, Neutral	1
2	1027651	(000000-)	Bearing, Ball, 8mmb X 22mmd X 7mmw	1
3	1028246	(000000-)	Bearing, Flng, 0.75b 1.00d 0.75l, Bnz	2
4	16213	(000000-)	Bolt, Shld, .31d X 1.00, .25-20	2
5	1034133	(000000-005699)	Bracket Wldt, Linkage, Propel	1
5	1072476	(005700-)	Bracket Wldt, Linkage, Propel [Mits]	1
6	1035619	(000000-)	Cable, Push / Pull, 062.5l M6x1.0/M6x1.0	1
7	1031939	(000000-)	Hub Wldt	1
8	59649	(000000-)	Isolator, Vib, Bshg, 1.1d 0.6l .4b 0.78h	3
9	1034244	(000000-)	Lever, Pump	1
10	75934	(000000-)	Nut, Hex, Lock, .25-20, Nl	2
11	76570	(000000-)	Screw, Hex, M8 X 1.25 X 30, 8.8	1
12	08709	(000000-)	Nut, Hex, Lock, M8 X 1.25, Nl	1
13	39284	(000000-)	Screw, Hex, M10 X 1.50 X 35, 8.8	3
14	13248	(000000-)	Washer, Flat, 0.40b 1.12d .12, Stl, Pl	3
15	41430	(000000-)	Nut, Hex, Lock, M10 X 1.5, Nl	3
16	1033995	(000000-)	Rod-End, M6 X 1.0rh Fem 6mmb [Nylon]	1
17	06945	(000000-)	Screw, Hex, M6 X 1.00 X 30, 8.8	1
18	32483	(000000-)	Washer, Flat, 0.25, Sae	2
19	08708	(000000-)	Nut, Hex, Lock, M6 X 1.00, Nl	1
20	1033237	(000000-)	Screw, Soc, .31-24 X 1.00, Al	1
21	73411	(000000-)	Shock Absorber, 2.3 Strk	1
22	1027531	(000000-)	Spacer, 0.33b 0.50d 0.15l, Pl	1
23	222236	(000000-)	Spring, Extn, 1.00od 0.12wir 05.0l	1
24	1027533	(000000-)	Pin, Pivot, 0.75d 02.1l, Int 0.33b	1
25	21198	(000000-)	Screw, Hex, .38-16 X 1.25, G5	2
26	32491	(000000-)	Washer, Flat, 0.31, Std	2
27	64489	(000000-)	Washer, Flat, 0.81b 1.24d .03, Stl, Pl	1
28	84170	(000000-)	Bracket, Retainer, Safety	1
29	39349	(000000-)	Washer, Flat, 0.31, Sae	1
30	41186	(000000-)	Washer, Flat, Belleville, .31	1
31	41359	(000000-)	Nut, Hex, Std, M6 X 1.00, 8	1
32	08709	(000000-)	Nut, Hex, Lock, M8 X 1.25, Nl	1

Fig. 38 - Hydraulic Pump Linkage Group, S30 X4

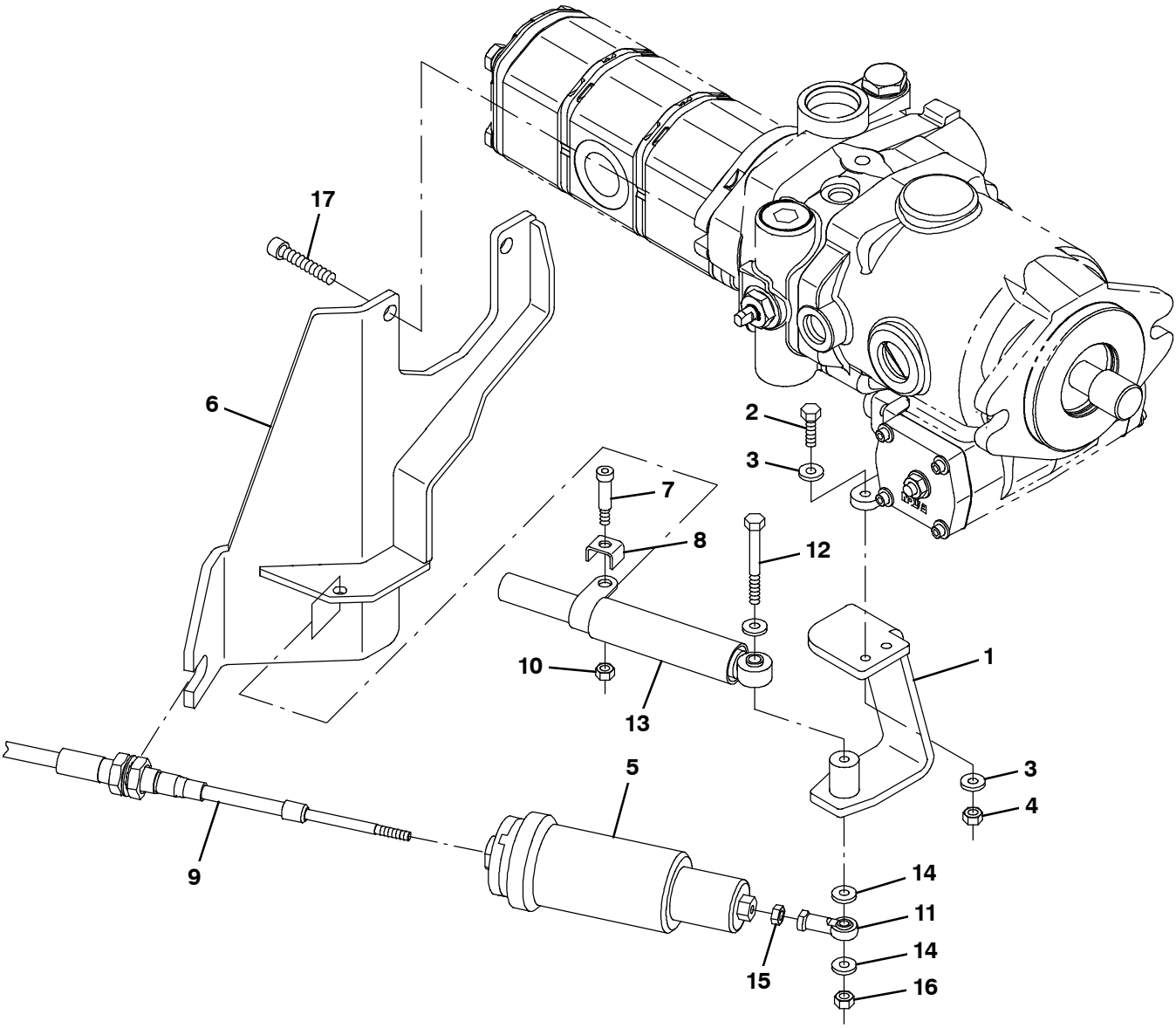

354774

Fig. 38 - Hydraulic Pump Linkage Group, S30 X4

Ref.	Part No.	Serial Number	Description	Qty.
1	1036157	(000000-)	Plate Wldt, Pump	1
2	06944	(000000-)	Screw, Hex, M6 X 1.00 X 25, 8.8	2
3	32483	(000000-)	Washer, Flat, 0.25, Sae	4
4	08708	(000000-)	Nut, Hex, Lock, M6 X 1.00, Nl	2
5	1037139	(000000-)	Spring Assy, Centering,10lb, 75mm Travel	1
6	1040198	(000000-)	Bracket Wldt, Mtg, Propel	1
7	16213	(000000-)	Bolt, Shld, .31d X 1.00, .25-20	1
8	84170	(000000-)	Bracket, Retainer, Safety	1
9	1039752	(000000-)	Cable, Push / Pull, 057.1l M6x1.0/M6x1.0	1
10	75934	(000000-)	Nut, Hex, Lock, .25-20, Nl	1
11	1033995	(000000-)	Rod-End, M6 X 1.0rh Fem 6mmb [Nylon]	2
12	09771	(000000-)	Screw, Hex, M6 X 1.00 X 70, Ss	1
13	73411	(000000-)	Shock Absorber, 2.3 Strk	1
14	32483	(000000-)	Washer, Flat, 0.25, Sae	9
15	41359	(000000-)	Nut, Hex, Std, M6 X 1.00, 8	2
16	08712	(000000-)	Nut, Hex, Lock, M6 X 1.00, Nl, Ss	1
17	19580	(000000-)	Screw, Soc, .38-16 X 2.00, Al	2

Fig. 39 - Hopper Group, Plastic

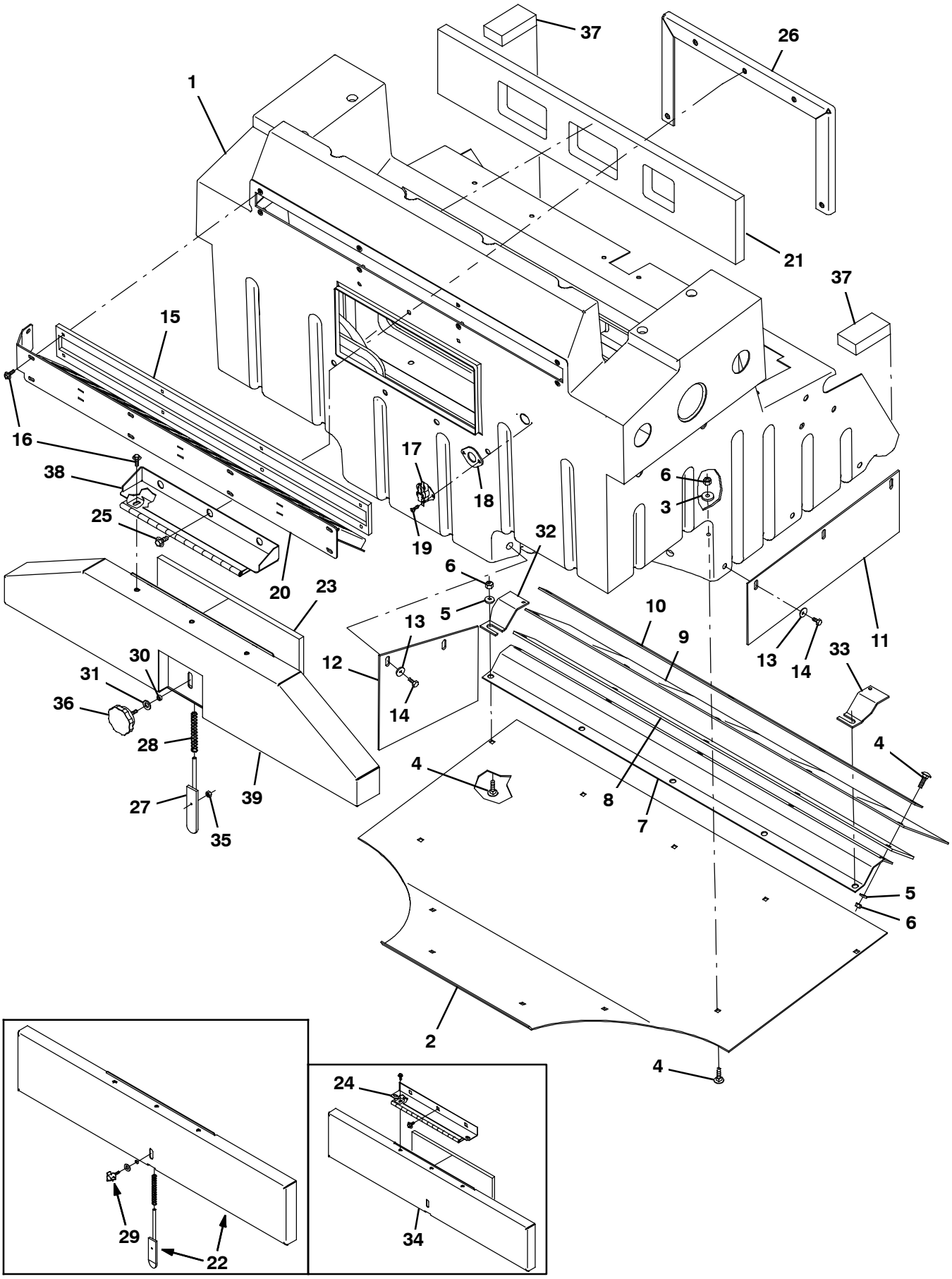

354689

Fig. 39 - Hopper Group, Plastic

	Ref.	Part No.	Serial Number	Description	Qty.
	1	1034614	(000000-)	Hopper, Plstc, Trimmed	1
	2	1032821	(000000-)	Plate, Sppt, Hppr Bottom	1
	3	1017218	(000000-)	Washer, Flat, 0.32b 1.00d .12, Ss	6
▽		9004077	(000000-)	Skirt Kit, Hppr, Maint [S30]	1
▲	4	1035684	(000000-)	Bolt, Carriage, M8 X 1.25 X 30	16
▲	5	32491	(000000-)	Washer, Flat, 0.31, Std	10
▲	6	08713	(000000-)	Nut, Hex, Lock, M8 X 1.25, Nl, Ss	16
▲	7	1034168	(000000-)	Bracket, Sppt, Hppr Seal	1
▲	8	1045357	(000000-)	Skirt, Lip	1
▲	9	1045359	(000000-)	Skirt, Lip, Hppr	1
▲	10	1026798	(000000-)	Strap, Main, Lip	1
▲	11	1038037	(000000-)	Skirt, Hppr	1
▲	12	1038353	(000000-)	Skirt, Neo, .12, 06.65w 18.50l, 03/ Sl	1
▲	13	41178	(000000-)	Washer, Flat, 0.25, Fendr	5
▲	14	11635	(000000-)	Screw, Hex, M6 X 1.00 X 12, Nl, Ss	5
	15	1036519	(000000-)	Seal, Perma-Filter	1
	16	1040467	(000000-)	Screw, Hex, M6 X 1.0 X 20, 9.8, Sems	11
	17	367679	(000000-)	Switch, Thermal, 160deg, Spdt	1
	18	82733	(000000-)	Gasket, Sensor, Thermal	1
	19	360943	(000000-)	Screw, Pan, Phl, 10-14 X 0.75, F/ Plstc	2
	20	1041967	(000000-)	Plate Wldt, Perma-Filter	1
	21	1037099	(000000-)	Seal, Inlet, Pre-Filter	1
	22	9004815	(000000-001304)	Latch Kit, Door, Access, Ci [S30]	1
	23	1035660	(000000-)	Seal, Foam, .50 7.47w 15.47l, Ure, Adh	1
	24	1032545	(000000-002099)	Hinge Wldt	1
	25	1037346	(000000-)	Screw, Hex, M8 X 1.25 X 25, 9.8, Sems	5
	26	1044939	(000000-)	Bracket, Support, Hinge	1
	27	1047418	(001305-)	Latch Wldt, Bolt	1
	28	626081	(000000-)	Spring, Cmpr, 0.48od .04wir 03.5l	1
	29	397225	(000000-001304)	Knob Assy, Star, 1.12d 3ear M06x1.0 0.8l	1
	30	80491	(000000-)	Sleeve, P/M, 0.25b 0.38d 0.2l [430ss]	1
	31	43611	(000000-)	Washer, Flat, 0.39b 0.75d .06, Nyl	1
	32	1044764	(000000-)	Bracket, Seal, Rh	1
	33	1044768	(000000-)	Bracket, Seal, Lh	1
	34	1047420	(001305-002099)	Door Wldt	1
	35	08708	(001305-)	Nut, Hex, Lock, M6 X 1.00, Nl	1
	36	1047543	(001305-)	Knob, Rnd, 2.38d 0.88l M6 X 1.0, Plstc	1
	37	1049158	(000000-)	Seal, Hppr	2
	38	1059223	(002100-)	Hinge Wldt, Hppr	1
	39	1058092	(002100-)	Door Wldt, Hppr	1

Fig. 40 - Hopper Group, Steel

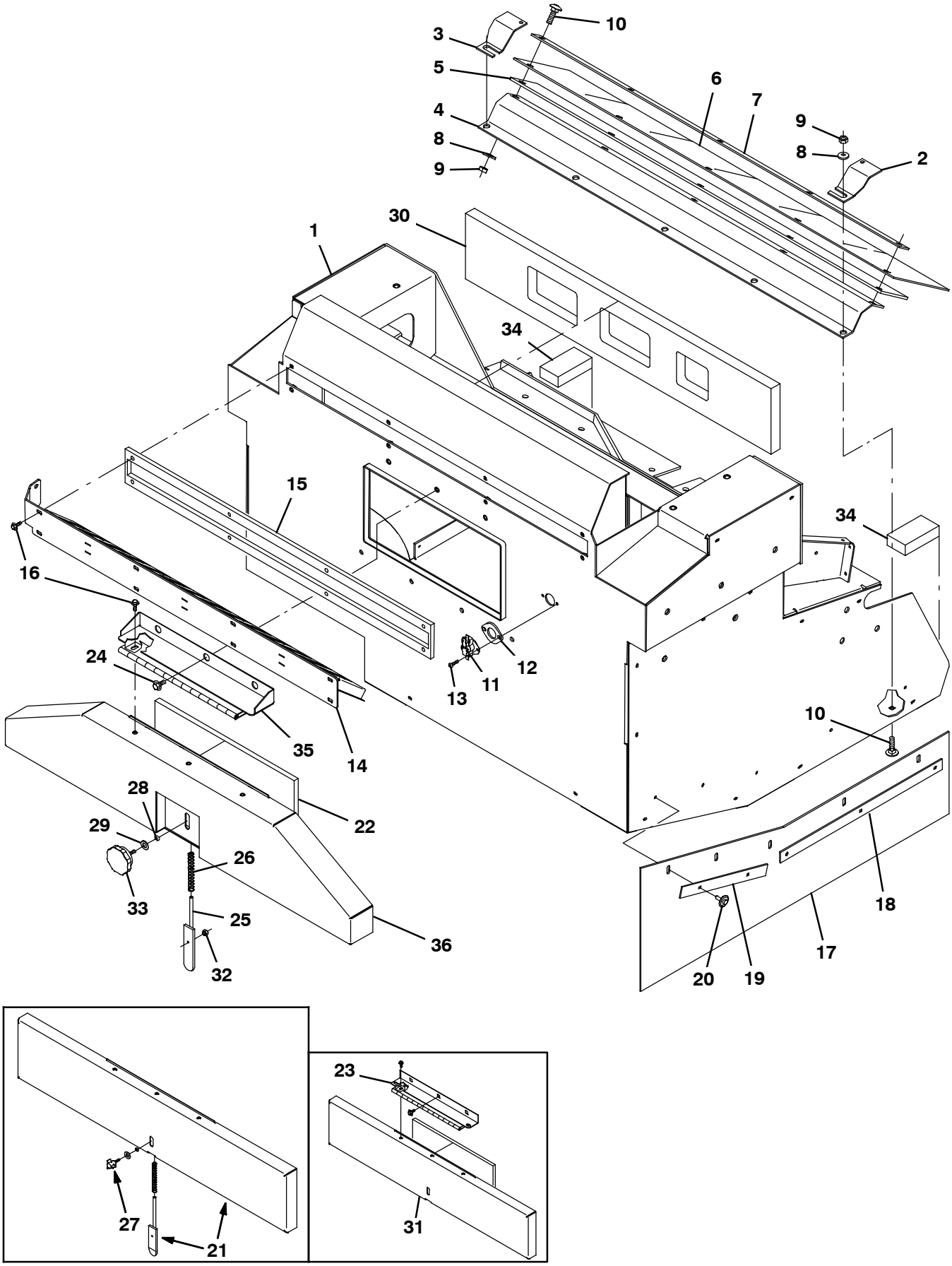

354690

Fig. 40 - Hopper Group, Steel

Ref.	Part No.	Serial Number	Description	Qty.
1	1026681	(000000-)	Hopper Wldt, Stl, Rear Dump	1
2	1044768	(000000-)	Bracket, Seal, Lh	1
3	1044764	(000000-)	Bracket, Seal, Rh	1
4	1034168	(000000-)	Bracket, Sppt, Hppr Seal	1
5	1045357	(000000-)	Skirt, Lip	1
6	1040590	(000000-)	Skirt, Lip, Hppr, Stl	1
7	1026798	(000000-)	Strap, Main, Lip	1
8	32491	(000000-)	Washer, Flat, 0.31, Std	10
9	08713	(000000-)	Nut, Hex, Lock, M8 X 1.25, Nl, Ss	10
10	1035684	(000000-)	Bolt, Carriage, M8 X 1.25 X 30	10
11	367679	(000000-)	Switch, Thermal, 160deg, Spdt	1
12	82733	(000000-)	Gasket, Sensor, Thermal	1
13	24265	(000000-)	Screw, Pan, Phl, M4 X 0.70 X 16, Ss	2
14	1041967	(000000-)	Plate Wldt, Perma-Filter	1
15	1036519	(000000-)	Seal, Perma-Filter	1
16	1040467	(000000-)	Screw, Hex, M6 X 1.0 X 20, 9.8, Sems	11
17	1040276	(000000-)	Skirt, Deflector	1
18	1040400	(000000-)	Retainer, Skirt	1
19	1040408	(000000-)	Retainer, Skirt	1
20	72968	(000000-)	Rivet, Plstc, .250d X 0.90	5
21	9004815	(000000-001304)	Latch Kit, Door, Access, Ci [S30]	1
22	1035660	(000000-)	Seal, Foam, .50 7.47w 15.47l, Ure, Adh	1
23	1032545	(000000-002099)	Hinge Wldt	1
24	1037346	(000000-)	Screw, Hex, M8 X 1.25 X 25, 9.8, Sems	6
25	1047418	(001305-)	Latch Wldt, Bolt	1
26	626081	(000000-)	Spring, Cmpr, 0.48od .04wir 03.5l	1
27	397225	(000000-001304)	Knob Assy, Star, 1.12d 3ear M06x1.0 0.8l	1
28	80491	(000000-)	Sleeve, P/M, 0.25b 0.38d 0.2l [430ss]	1
29	43611	(000000-)	Washer, Flat, 0.39b 0.75d .06, Nyl	1
30	1037099	(000000-)	Seal, Inlet, Pre-Filter	1
31	1047420	(001305-002099)	Door Wldt	1
32	08708	(001305-)	Nut, Hex, Lock, M6 X 1.00, Nl	1
33	1047543	(001305-)	Knob, Rnd, 2.38d 0.88l M6 X 1.0, Plstc	1
34	1049158	(000000-)	Seal, Hppr	2
35	1059223	(002100-)	Hinge Wldt, Hppr	1
36	1058092	(002100-)	Door Wldt, Hppr	1

Fig. 41 - Hopper Cylinder and Dump Door Group, Plastic

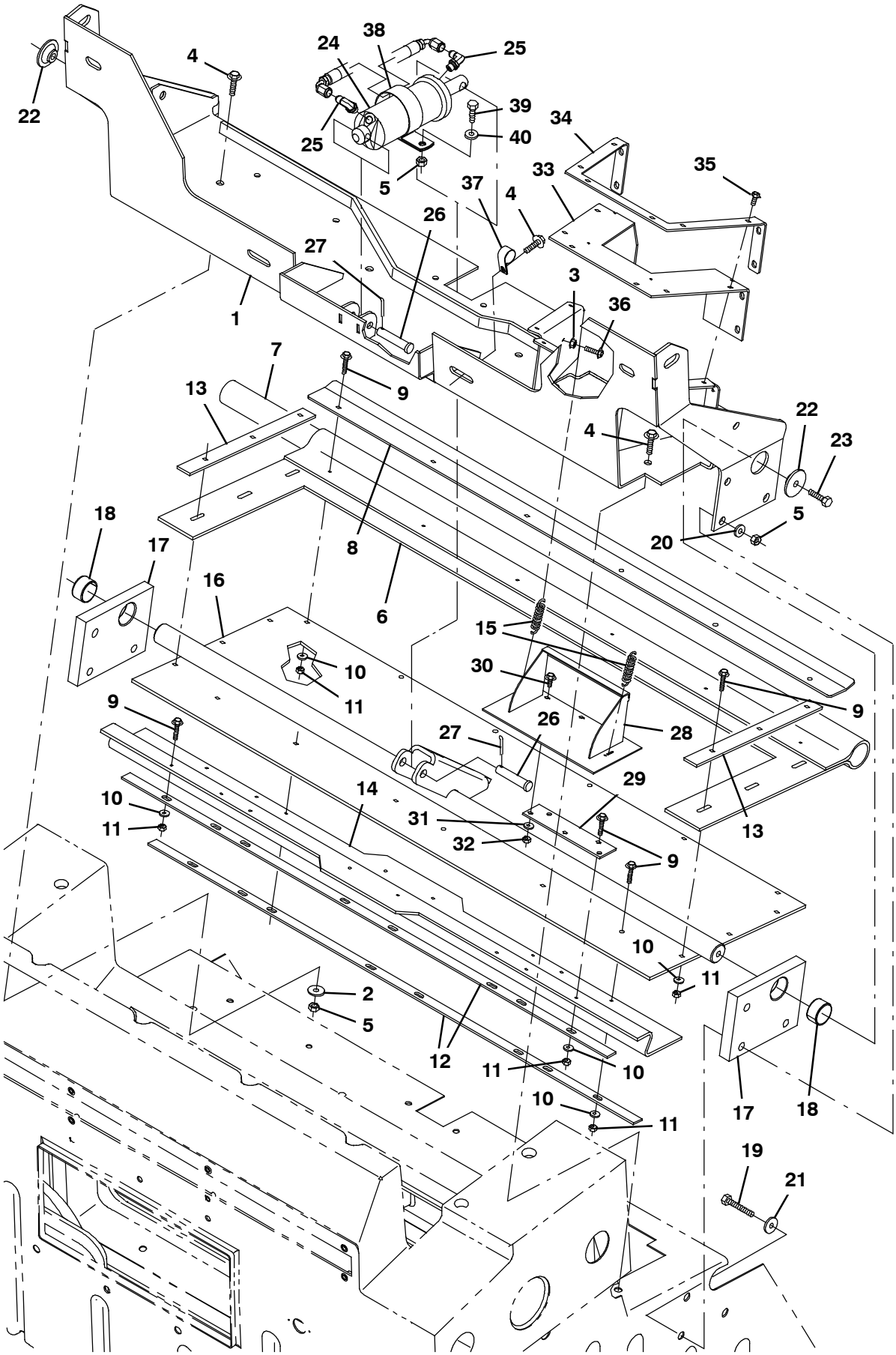

354691

Fig. 41 - Hopper Cylinder and Dump Door Group, Plastic

	Ref.	Part No.	Serial Number	Description	Qty.
	1	1039907	(000000-)	Panel Wldt, Mtg, Door	1
	2	1017218	(000000-)	Washer, Flat, 0.32b 1.00d .12, Ss	5
	3	07790	(000000-)	Nut, Hex, Flng, M6 X 1.00	2
	4	1037354	(000000-)	Screw, Hex, M8 X 1.25 X 30, 9.8, Sems	5
	5	08713	(000000-)	Nut, Hex, Lock, M8 X 1.25, Nl, Ss	12
▽		9004078	(000000-)	Skirt Kit, Door, Hppr, Maint [S30]	1
▲	6	1044420	(000000-)	Seal, Door, Dump	1
▲	7	1030218	(000000-)	Cord, Sponge	1
▲	8	1044419	(000000-)	Plate, Retainer, Door, Dump	1
▲	9	1037345	(000000-)	Screw, Hex, M6 X 1.00 X 30, 9.8, Sems	24
▲	10	32490	(000000-)	Washer, Flat, 0.25, Std	24
▲	11	08712	(000000-)	Nut, Hex, Lock, M6 X 1.00, Nl, Ss	24
▲	12	1048891	(000000-)	Plate, Seal, Retainer	2
▲	13	1044950	(000000-)	Strap, Door, Dump, Side	2
▲	14	1026879	(000000-)	Seal, Wiper, Door	1
	15	75575	(000000-)	Spring, Extn, 0.50od 0.06wir 02.5l	2
	16	1026755	(000000-)	Door Wldt, Hppr	1
	17	1037335	(000000-)	Housing, Brg, Pivot, Door	2
	18	1040759	(000000-)	Bearing, Journal-1.25 I.D. X .75 Lg	2
	19	16930	(000000-)	Screw, Hex, M10 X 1.50 X 50, 8.8	6
	20	32492	(000000-)	Washer, Flat, 0.38, Std	6
	21	1017218	(000000-)	Washer, Flat, 0.32b 1.00d .12, Ss	6
	22	1044095	(000000-)	Spacer, Sppt	2
	23	09011	(000000-)	Screw, Hex, M8 X 1.25 X 30, Ss	2
	24	1038176	(000000-)	Cylinder, Hyd, 2.0b 08.0l 04.00strk 2500	1
	25	77097	(000000-002999)	Fitting, Hyd, E90, Jm04/Om04	2
	25	762427	(003000-)	Fitting, Hyd, E90, Fm04/Om04	2
	26	630448	(000000-)	Pin, Clevis, 0.50d X 2.25l	2
	27	08236	(000000-)	Pin, Cotter, .156 X 1.25	2
	28	1039883	(000000-)	Door Wldt, Dust	1
	29	1039916	(000000-)	Hinge, Rbr	1
	30	1040467	(000000-)	Screw, Hex, M6 X 1.0 X 20, 9.8, Sems	3
	31	32490	(000000-)	Washer, Flat, 0.25, Std	3
	32	08712	(000000-)	Nut, Hex, Lock, M6 X 1.00, Nl, Ss	3
	33	1047073	(000000-)	Gasket, Rbr, Dust Chute	1
	34	1047096	(000000-)	Bracket, Seal, Chute	1
	35	222158	(000000-)	Screw, Hex, M6 X 1.00 X 10, Fmg	10
	36	222159	(000000-)	Screw, Hex, M6 X 1.00 X 25, Fmg	2
	37	53468	(000000-)	Clamp, Cable, Stl, 1.75d X 1.00w, 1hole	1
	38	70157	(000000-)	Clamp, Cable, Ss, 2.50d X 1.00w, 1hole	1
	39	09010	(000000-)	Screw, Hex, M8 X 1.25 X 25, Ss	1
	40	32491	(000000-)	Washer, Flat, 0.31, Std	1

Fig. 42 – Hopper Cylinder and Dump Door Group, Steel

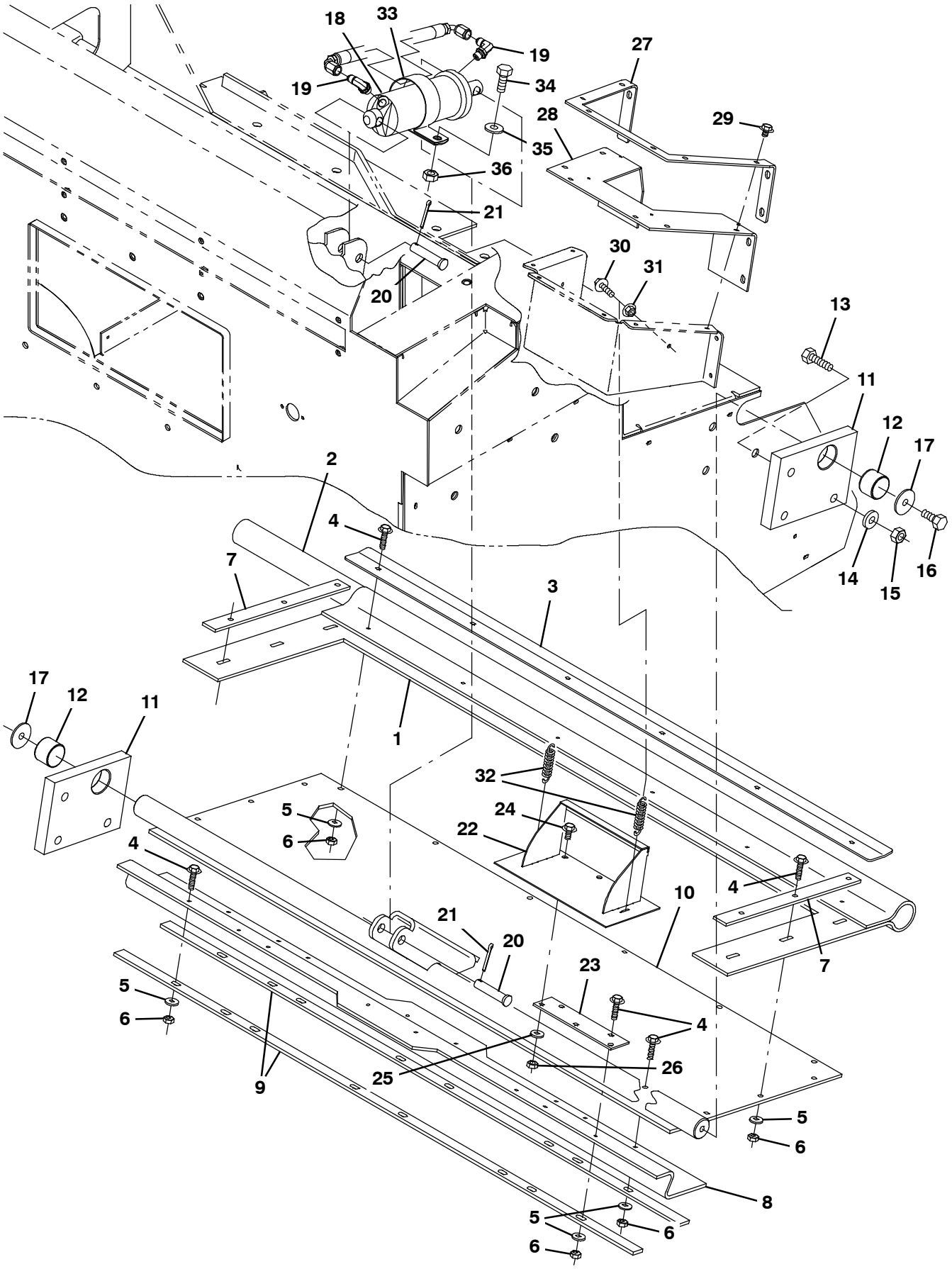

354692

Fig. 42 - Hopper Cylinder and Dump Door Group, Steel

	Ref.	Part No.	Serial Number	Description	Qty.
▽		9004078	(000000-)	Skirt Kit, Door, Hppr, Maint [S30]	1
▲	1	1044420	(000000-)	Seal, Door, Dump	1
▲	2	1030218	(000000-)	Cord, Sponge	1
▲	3	1044419	(000000-)	Plate, Retainer, Door, Dump	1
▲	4	1037345	(000000-)	Screw, Hex, M6 X 1.00 X 30, 9.8, Sems	24
▲	5	32490	(000000-)	Washer, Flat, 0.25, Std	24
▲	6	08712	(000000-)	Nut, Hex, Lock, M6 X 1.00, Nl, Ss	24
▲	7	1044950	(000000-)	Strap, Door, Dump, Side	2
▲	8	1026879	(000000-)	Seal, Wiper, Door	1
▲	9	1048891	(000000-)	Plate, Seal, Retainer	2
	10	1026755	(000000-)	Door Wldt, Hppr	1
	11	1037335	(000000-)	Housing, Brg, Pivot, Door	2
	12	1040759	(000000-)	Bearing, Journal-1.25 I.D. X .75 Lg	2
	13	06962	(000000-)	Screw, Hex, M10 X 1.50 X 45, 8.8	6
	14	32492	(000000-)	Washer, Flat, 0.38, Std	6
	15	41430	(000000-)	Nut, Hex, Lock, M10 X 1.5, Nl	6
	16	15675	(000000-)	Screw, Hex, M8 X 1.25 X 16, Ss	2
	17	379829	(000000-)	Washer, Flat, 0.34b 1.50d .12, Stl, Pl	2
	18	1038176	(000000-)	Cylinder, Hyd, 2.0b 08.0l 04.00strk 2500	1
	19	77097	(000000-002999)	Fitting, Hyd, E90, Jm04/Om04	2
	19	762427	(003000-)	Fitting, Hyd, E90, Fm04/Om04	2
	20	630448	(000000-)	Pin, Clevis, 0.50d X 2.25l	2
	21	08236	(000000-)	Pin, Cotter, .156 X 1.25	2
	22	1039883	(000000-)	Door Wldt, Dust	1
	23	1039916	(000000-)	Hinge, Rbr	1
	24	1040467	(000000-)	Screw, Hex, M6 X 1.0 X 20, 9.8, Sems	3
	25	32483	(000000-)	Washer, Flat, 0.25, Sae	3
	26	08712	(000000-)	Nut, Hex, Lock, M6 X 1.00, Nl, Ss	3
	27	1047096	(000000-)	Bracket, Seal, Chute	1
	28	1047073	(000000-)	Gasket, Rbr, Dust Chute	1
	29	361339	(000000-)	Screw, Hex, M6 X 1.00 X 16, Fmg	10
	30	222159	(000000-)	Screw, Hex, M6 X 1.00 X 25, Fmg	2
	31	07790	(000000-)	Nut, Hex, Flng, M6 X 1.00	2
	32	75575	(000000-)	Spring, Extn, 0.50od 0.06wir 02.5l	2
	33	70157	(000000-)	Clamp, Cable, Ss, 2.50d X 1.00w, 1hole	1
	34	09010	(000000-)	Screw, Hex, M8 X 1.25 X 25, Ss	1
	35	32491	(000000-)	Washer, Flat, 0.31, Std	1
	36	08713	(000000-)	Nut, Hex, Lock, M8 X 1.25, Nl, Ss	1

Fig. 43 - Hopper Cover Group (000000-002099)

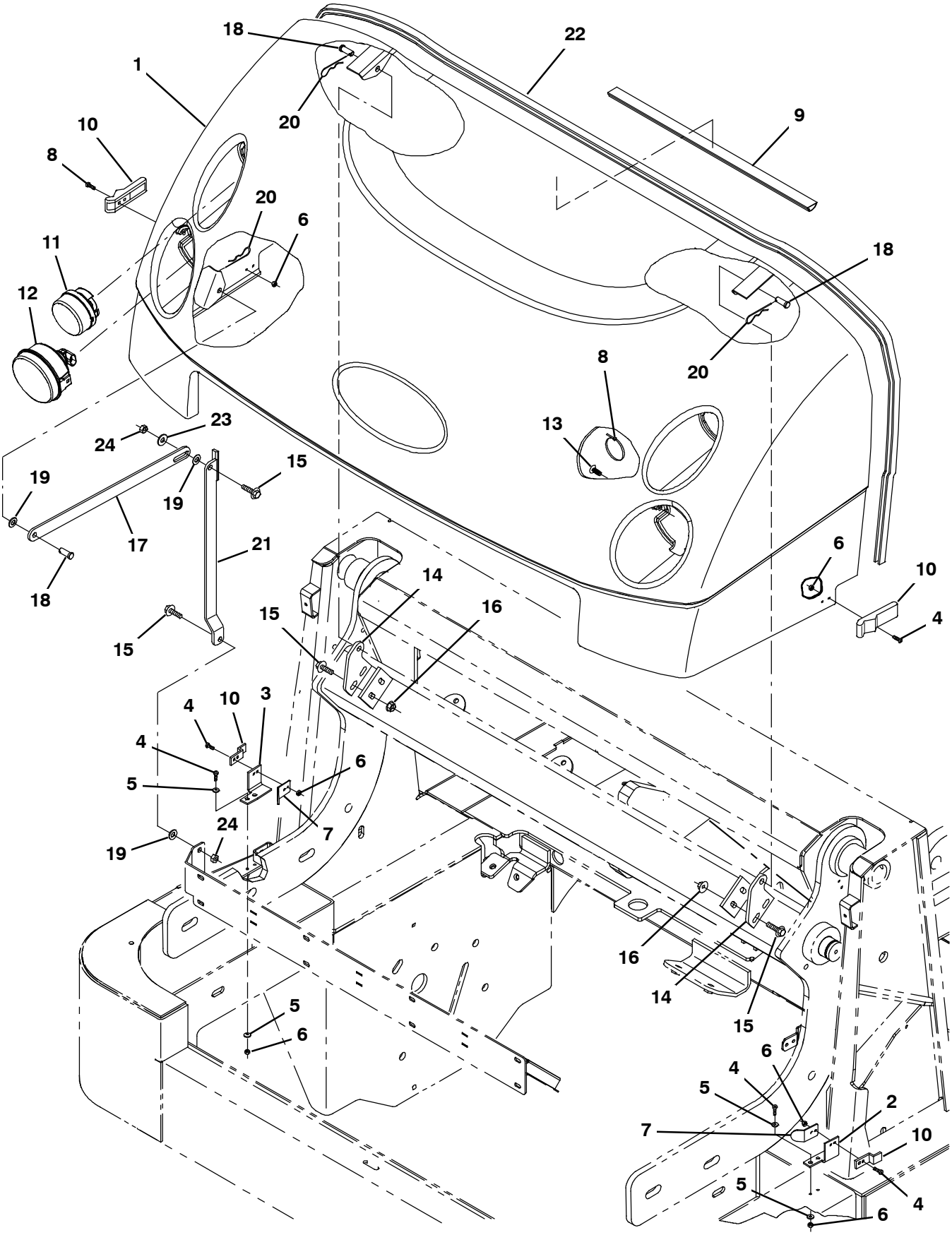

354693

Fig. 43 - Hopper Cover Group (000000-002099)

	Ref.	Part No.	Serial Number	Description	Qty.
	1	1040118	(000000-002099)	Cover Assy, Hppr	1
	2	1039971	(000000-002099)	Bracket, Latch, Rh	1
	3	1039999	(000000-002099)	Bracket, Latch, Lh	1
	4	06927	(000000-002099)	Screw, Pan, Phl, M4 X 0.70 X 16, 4.8	8
	5	19065	(000000-002099)	Washer, Flat, 08	8
	6	02850	(000000-002099)	Nut, Hex, Lock, M4 X 0.70, Nl	8
	7	1034864	(000000-002099)	Angle, Guide	2
	8	49263	(000000-002099)	Tie, Cable, Nyl, 11.4l .19w 3.0 Max D	2
	9	55034	(000000-002099)	Duct, Vyl, 0.74 X 1.50 .75d Max 48.0l	1
	10	49800	(000000-002099)	Latch	2
	11	1029238	(000000-002099)	Lens Assy, W/ Reflector	2
▽	12	1029280	(000000-002099)	Headlight, 12vdc, 35watt 2.8a, Halogen	2
▲		1060413	(000000-002099)	Lamp, 12vdc, 37.5watt, Halogen	1
	13	21168	(000000-002099)	Clip, .250h, Plstc [Pine-Tree]	2
	14	1039812	(000000-002099)	Plate, Hinge	2
	15	1037354	(000000-002099)	Screw, Hex, M8 X 1.25 X 30, 9.8, Sems	6
	16	07791	(000000-002099)	Nut, Hex, Flng, M8 X 1.25	4
	17	1039942	(000000-002099)	Link, 0.19, 1.0w 16.5l, 1/0.5h 1/0.4sl	1
	18	04733-2	(000000-002099)	Pin, Clevis, 0.37d X 0.62l	3
	19	43611	(000000-002099)	Washer, Flat, 0.39b 0.75d .06, Nyl	3
	20	86866	(000000-002099)	Pin, Cotter, Hair, 0.38d .072 Wir	3
	21	1040082	(000000-002099)	Arm Wldt, Safety	1
	22	1046408	(000000-002099)	Molding, Afmkt, Trim, Pvc, .18 .31, 12ft	1
	23	32491	(000000-002099)	Washer, Flat, 0.31, Std	1
	24	08709	(000000-002099)	Nut, Hex, Lock, M8 X 1.25, Nl	2

Fig. 44 - Hopper Cover Group (002100-)

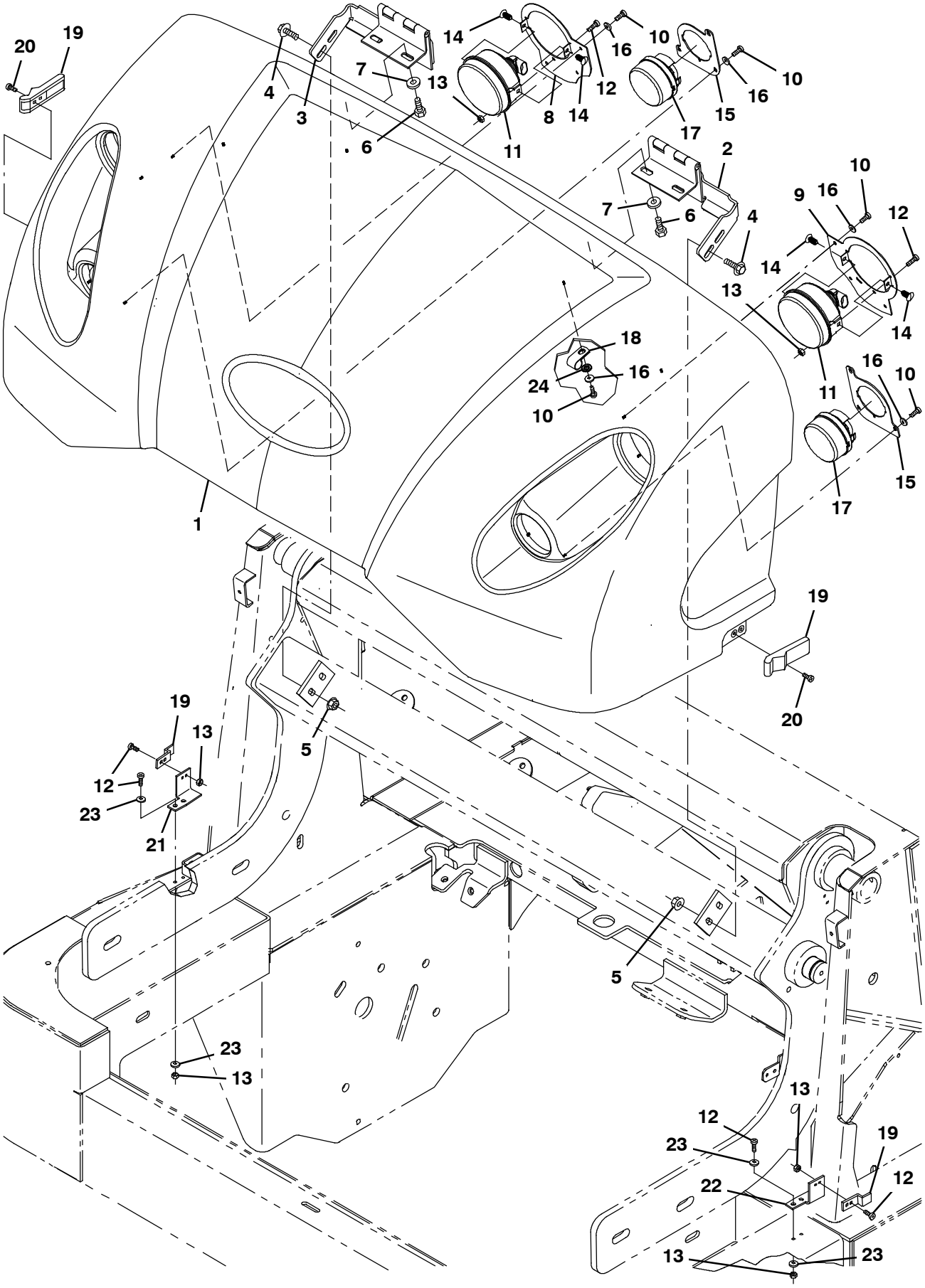

354693

Fig. 44 - Hopper Cover Group (002100-)

	Ref.	Part No.	Serial Number	Description	Qty.
	1	9007972	(002100-)	Cover, Hppr, Rotomold, Afmkt [S30]	1
	2	1059278	(002100-)	Hinge Wldt, Cover, Hppr, Lh	1
	3	1059339	(002100-)	Hinge Wldt, Cover, Hppr, Rh	1
	4	1037346	(002100-)	Screw, Hex, M8 X 1.25 X 25, 9.8, Sems	4
	5	07791	(002100-)	Nut, Hex, Flng, M8 X 1.25	4
	6	15675	(002100-)	Screw, Hex, M8 X 1.25 X 16, Ss	4
	7	32491	(002100-)	Washer, Flat, 0.31, Std	4
	8	1057936	(002100-)	Plate, Ring, Headlight, Rh	1
	9	1057942	(002100-)	Plate, Ring, Headlight, Lh	1
	10	360943	(002100-)	Screw, Pan, 12-16 X 0.75, F/ Plstc	16
▽	11	1029280	(002100-)	Headlight, 12vdc, 35watt 2.8a, Halogen	2
▲		1060413	(002100-)	Lamp, 12vdc, 37.5watt, Halogen	1
	12	06927	(002100-)	Screw, Pan, Phl, M4 X 0.70 X 16, 4.8	10
	13	02850	(002100-)	Nut, Hex, Lock, M4 X 0.70, Nl	10
	14	1066063	(002100-)	Plug, Hole, Rnd, 0.25h 0.43l, Brb, Nyl	4
	15	1057934	(002100-)	Plate, Ring, Light	2
	16	19066	(002100-)	Washer, Flat, 10	16
	17	1029238	(002100-)	Lens Assy, W/ Reflector	2
	18	82829	(002100-)	Clamp, Cable, Stl, 0.63d X 0.75w, 1hole	4
	19	49800	(002100-)	Latch	2
	20	49697	(002100-)	Screw, Pan, Phl, M4 X 0.70 X 10, Ss	4
	21	1039971	(002100-)	Bracket, Latch, Rh	1
	22	1039999	(002100-)	Bracket, Latch, Lh	1
	23	19065	(002100-)	Washer, Flat, 08	8
	24	41139	(002100-)	Washer, Lock, Int-ext, 10	4

Fig. 45 - Hopper Lift Arms and Bumper Group, Plastic

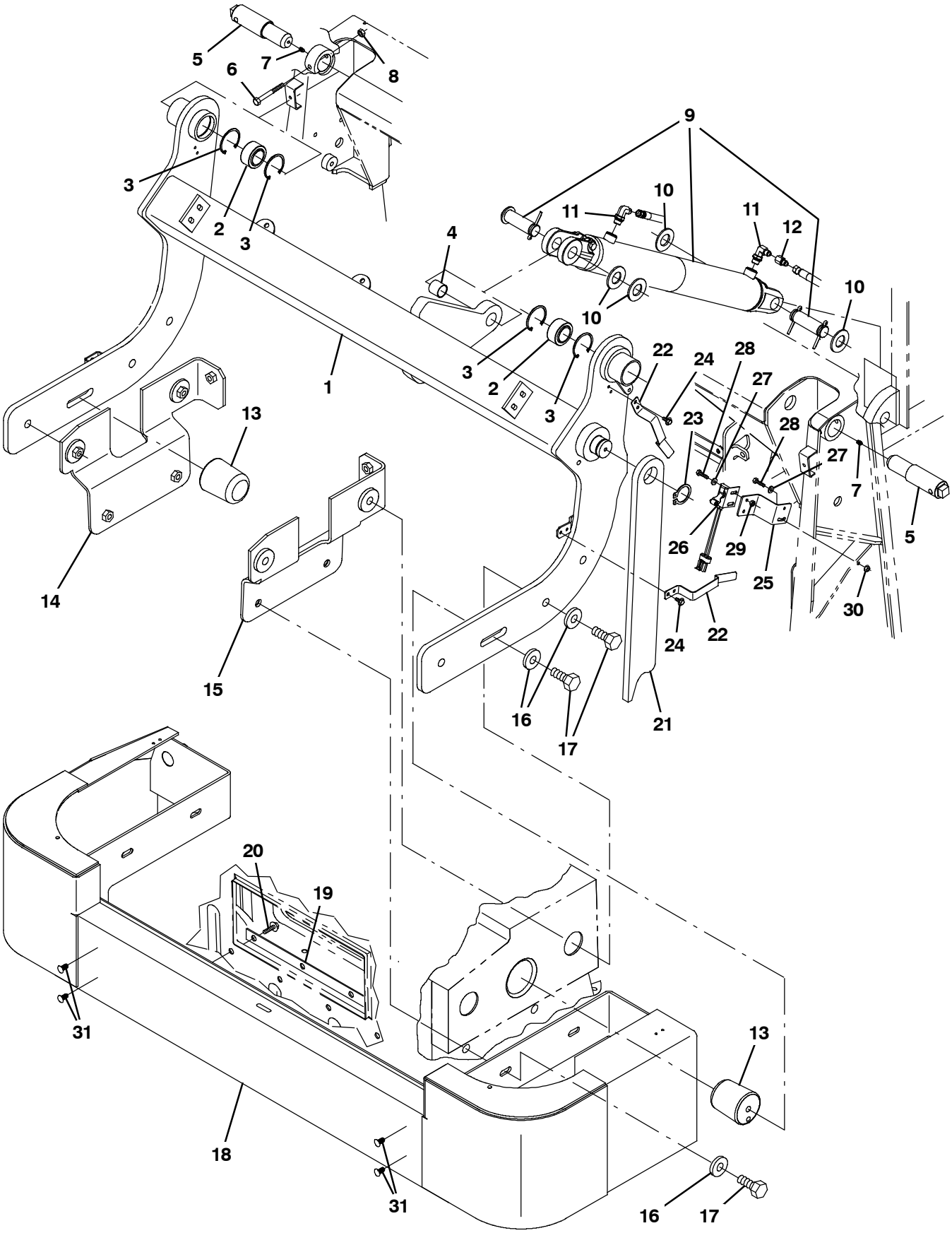

354694

Fig. 45 - Hopper Lift Arms and Bumper Group, Plastic

	Ref.	Part No.	Serial Number	Description	Qty.
	1	9004519	(000000-)	Arm, Lift, Hppr, W/ Label, Replmt	1
	2	42120-1	(000000-)	Bearing, Self Align, 1.25b 2.00d	2
	3	59542	(000000-)	Ring, Retaining, Int, 2.00d	4
	4	35529	(000000-)	Bushing, Sleeve, 1.00b 1.13d 0.99l, Fgl	1
	5	1030102	(000000-)	Pin, Lift, Hppr	2
	6	39279	(000000-)	Screw, Hex, M8 X 1.25 X 70, 8.8	2
	7	07259	(000000-)	Fitting, Grease, Str Pm04 .47l	2
	8	08709	(000000-)	Nut, Hex, Lock, M8 X 1.25, Nl	2
▽	9	1038915	(000000-)	Cylinder, Hyd, 2.5b 28.6l 18.62strk 3000	1
▲		373702	(000000-)	Seal Kit	1
	10	32598	(000000-)	Washer, Flat, 1.02b 1.75d .12, Stl	4
	11	47638	(000000-002999)	Fitting, Hyd, E90, Jm04/Om06	2
	11	762425	(003000-)	Fitting, Hyd, E90, Fm04/Om06	2
	12	16455	(000000-002999)	Fitting, Hyd, Rst, Jf04/Jm04, .047	1
	12	1067059	(003000-)	Fitting, Hyd, Rst, Fm04/Of04, .047	1
	13	1038922	(000000-)	Pin, Hppr, Lift	2
	14	1042327	(000000-)	Plate Wldt, Sppt, Hppr, Rh	1
	15	1042328	(000000-)	Plate Wldt, Sppt, Hppr, Lh	1
	16	36328	(000000-)	Washer, Flat, Belleville, .50	10
	17	69972	(000000-)	Screw, Hex, M12 X 1.75 X 40, 10.9	10
	18	1026317	(000000-)	Bumper Wldt, Front	1
	19	1038070	(000000-)	Bar, Flat, Ss 0.12 01.00 X 18.5l, 4/0.5h	1
	20	1037355	(000000-)	Screw, Hex, M8 X 1.25 X 35, 9.8, Sems	4
	21	9004527	(000000-)	Arm, Safety, Hppr, W/ Label, Replmt	1
	22	1042973	(000000-)	Clip, Spring, Prop Arm	2
	23	63926	(000000-)	Ring, Retaining, Ext, 1.50d, Hd	1
	24	222158	(000000-)	Screw, Hex, M6 X 1.00 X 10, Fmg	4
	25	1039057	(000000-)	Bracket, Mtg, Switch	1
	26	367404	(000000-)	Switch, Snap, 15a No, Rlr	1
	27	19066	(000000-)	Washer, Flat, 10	4
	28	09252	(000000-)	Screw, Hex, M5 X 0.80 X 20, 8.8	4
	29	06549	(000000-)	Nut, Hex, Lock, M5 X 0.80, Nl	4
	30	07789	(000000-)	Nut, Hex, Flng, M5 X 0.80	2
	31	21168	(000000-)	Plug, Hole, Rnd, 0.25h 0.8l, Brb, Nyl	4

Fig. 46 - Hopper Lift Arms and Bumper Group, Steel

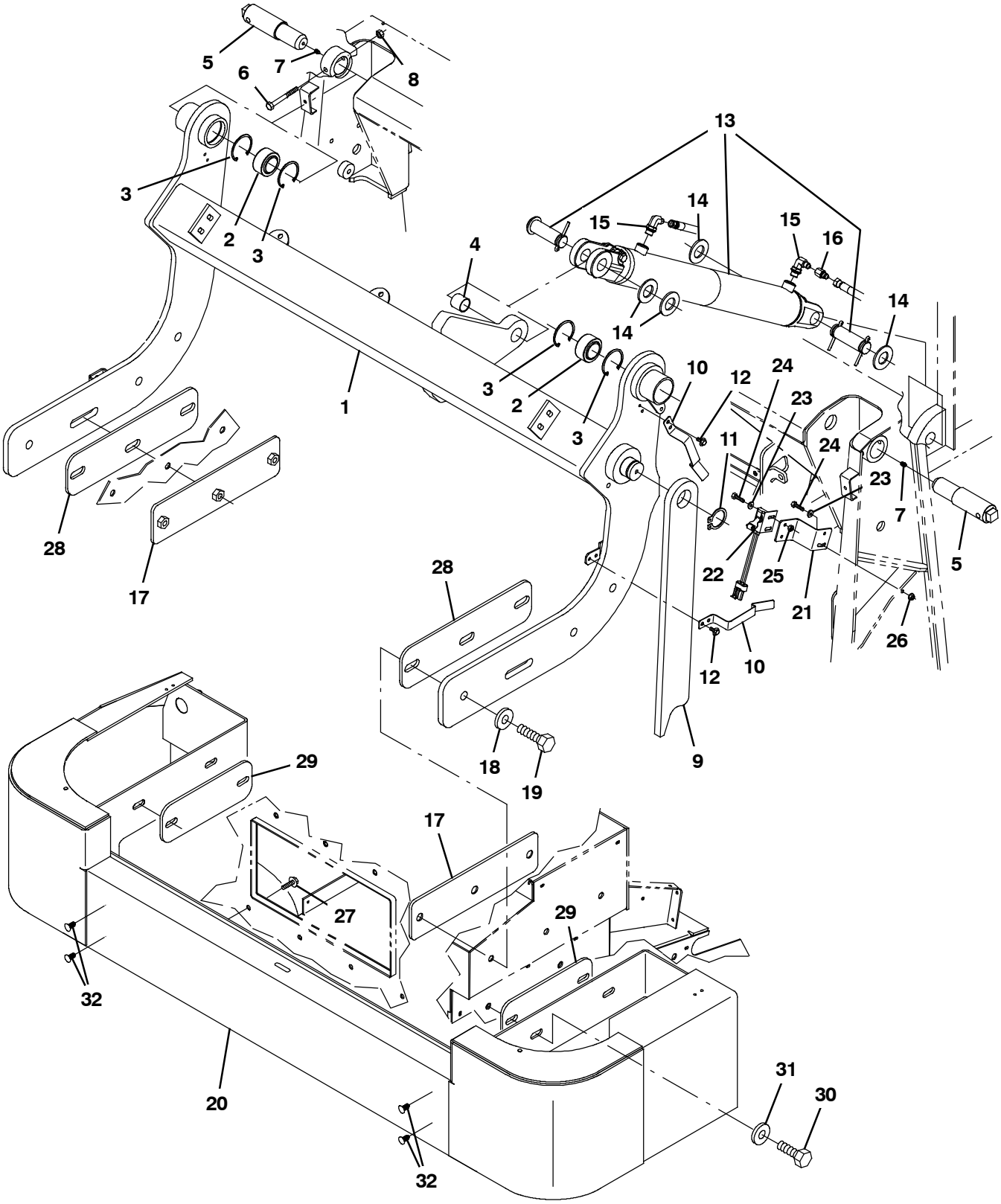

354695

Fig. 46 - Hopper Lift Arms and Bumper Group, Steel

	Ref.	Part No.	Serial Number	Description	Qty.
	1	9004519	(000000-)	Arm, Lift, Hppr, W/ Label, Replmt	1
	2	42120-1	(000000-)	Bearing, Self Align, 1.25b 2.00d	2
	3	59542	(000000-)	Ring, Retaining, Int, 2.00d	4
	4	35529	(000000-)	Bushing, Sleeve, 1.00b 1.13d 0.99l, Fgl	1
	5	1030102	(000000-)	Pin, Lift, Hppr	2
	6	39279	(000000-)	Screw, Hex, M8 X 1.25 X 70, 8.8	2
	7	07259	(000000-)	Fitting, Grease, Str Pm04 .47l	2
	8	08709	(000000-)	Nut, Hex, Lock, M8 X 1.25, Nl	2
	9	9004527	(000000-)	Arm, Safety, Hppr, W/ Label, Replmt	1
	10	1042973	(000000-)	Clip, Spring, Prop Arm	2
	11	63926	(000000-)	Ring, Retaining, Ext, 1.50d, Hd	1
	12	222158	(000000-)	Screw, Hex, M6 X 1.00 X 10, Fmg	4
▽	13	1038915	(000000-)	Cylinder, Hyd, 2.5b 28.6l 18.62strk 3000	1
▲		373702	(000000-)	Seal Kit	1
	14	32598	(000000-)	Washer, Flat, 1.02b 1.75d .12, Stl	4
	15	47638	(000000-002999)	Fitting, Hyd, E90, Jm04/Om06	2
	15	762425	(003000-)	Fitting, Hyd, E90, Fm04/Om06	2
	16	16455	(000000-002999)	Fitting, Hyd, Rst, Jf04/Jm04, .047	1
	16	1067059	(003000-)	Fitting, Hyd, Rst, Fm04/Of04, .047	1
	17	1039914	(000000-)	Plate, Sppt, Hppr	2
	18	36328	(000000-)	Washer, Flat, Belleville, .50	6
	19	06971	(000000-)	Screw, Hex, M12 X 1.75 X 50, 8.8	6
	20	1026317	(000000-)	Bumper Wldt, Front	1
	21	1039057	(000000-)	Bracket, Mtg, Switch	1
	22	367404	(000000-)	Switch, Snap, 15a No, Rlr	1
	23	19066	(000000-)	Washer, Flat, 10	4
	24	09252	(000000-)	Screw, Hex, M5 X 0.80 X 20, 8.8	4
	25	06549	(000000-)	Nut, Hex, Lock, M5 X 0.80, Nl	4
	26	07789	(000000-)	Nut, Hex, Flng, M5 X 0.80	2
	27	1037355	(000000-)	Screw, Hex, M8 X 1.25 X 35, 9.8, Sems	4
	28	1046929	(000000-)	Plate	2
	29	1046928	(000000-)	Plate	2
	30	69972	(000000-)	Screw, Hex, M12 X 1.75 X 40, 10.9	4
	31	32493	(000000-)	Washer, Flat, 0.50, Std	4
	32	21168	(000000-)	Plug, Hole, Rnd, 0.25h 0.8l, Brb, Nyl	4

Fig. 47 - Hopper Counter Weight Group, Steel

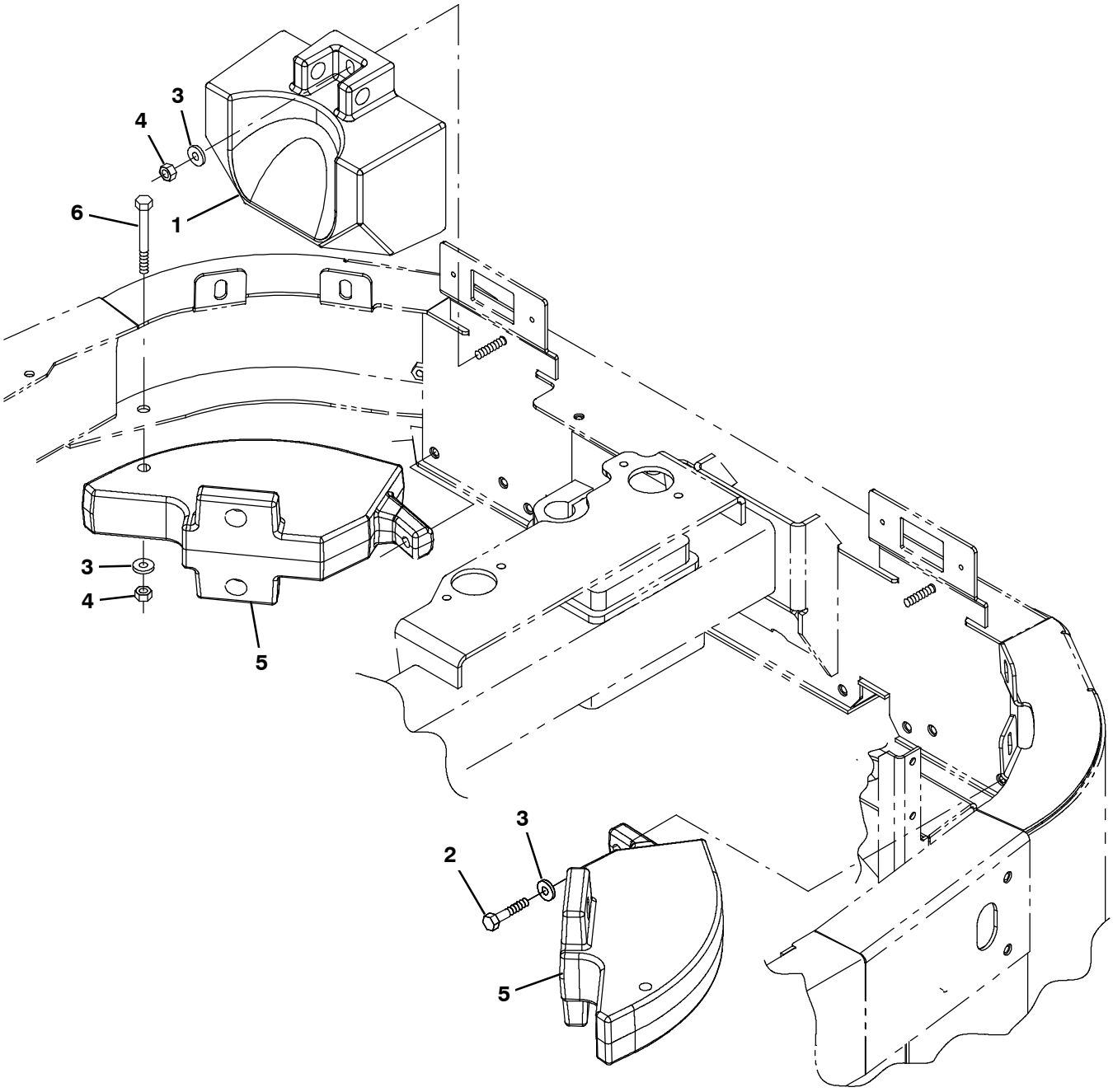

354696

Fig. 47 - Hopper Counter Weight Group, Steel

Ref.	Part No.	Serial Number	Description	Qty.
1	1031503	(000000-)	Weight, Counter, Casting, 72.8lb	1
2	16930	(000000-)	Screw, Hex, M10 X 1.50 X 50, 8.8	3
3	32493	(000000-)	Washer, Flat, 0.50, Std	6
4	08714	(000000-)	Nut, Hex, Lock, M10 X 1.5, Nl, Ss	3
5	1034978	(000000-)	Weight, Counter, Casting, 52.8lb	2
6	03193	(000000-)	Screw, Hex, M10 X 1.50 X 90, 8.8	2

Fig. 48 - Hopper Pre-Filter Group

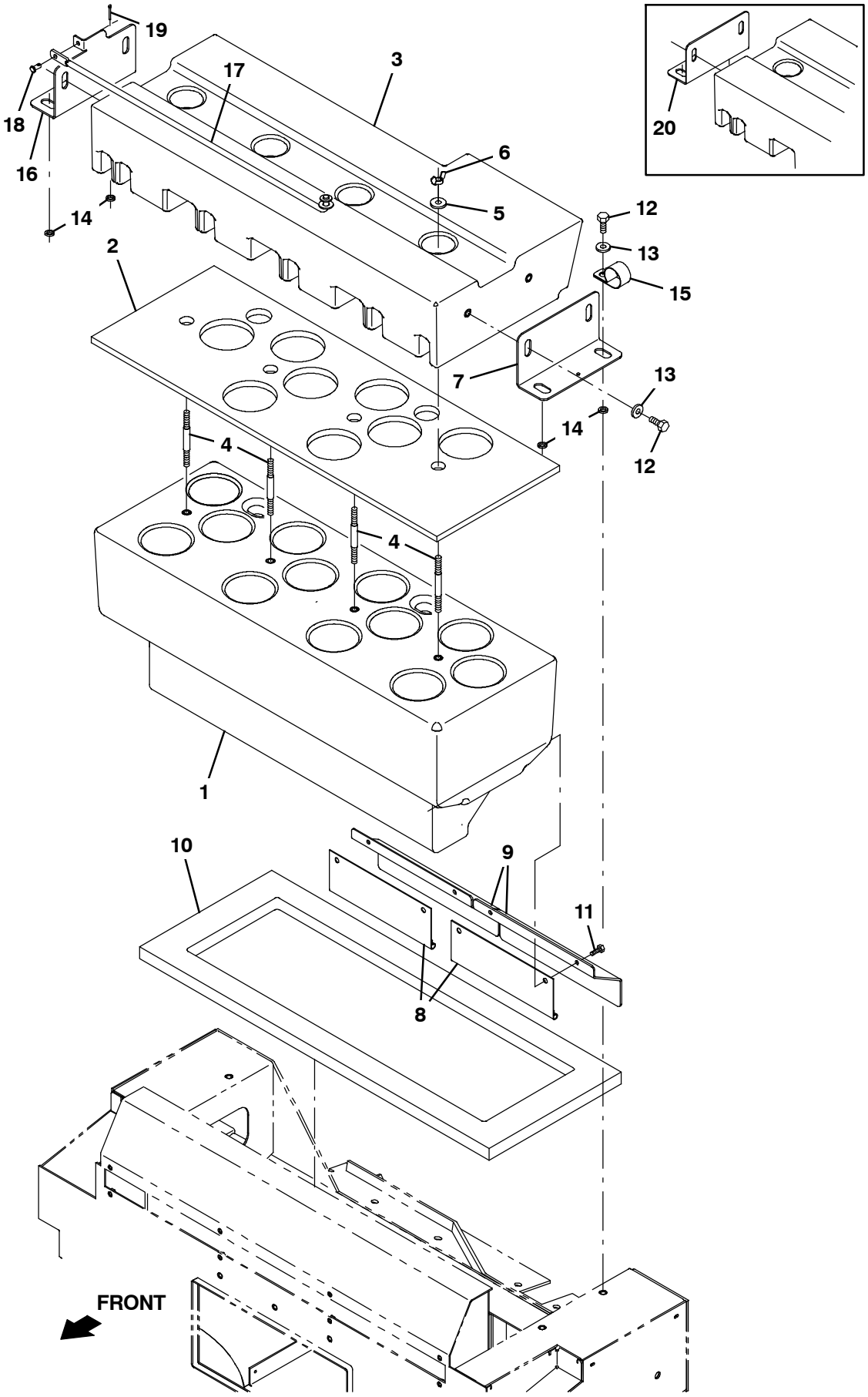

354697

Fig. 48 - Hopper Pre-Filter Group

Ref.	Part No.	Serial Number	Description	Qty.
1	1035293	(000000-)	Box, Pre-Filter, Lower, Trimmed	1
2	1027149	(000000-)	Seal, Pre-Filter [Midsize]	1
3	1035506	(000000-)	Box, Pre-Filter, Upper, 3 X 4, Trimmed	1
4	1038160	(000000-)	Rod, Thrd, 2 End, M10 X 1.5 04.6l	4
5	33948	(000000-)	Washer, Flat, 0.38, Fendr	4
6	1038172	(000000-)	Nut, Wing, M10 X 1.5, Pltd	4
7	1045109	(000000-)	Bracket, Mtg, Filter	1
8	1036802	(000000-)	Seal Assy, Pre-Filter	2
9	1042047	(000000-)	Bracket, Retainer, Dust Seal	2
10	1044998	(000000-)	Seal, Pre-Filter	1
11	06942	(000000-)	Screw, Hex, M6 X 1.00 X 16, 8.8	4
12	06960	(000000-)	Screw, Hex, M10 X 1.50 X 16, 8.8	8
13	13248	(000000-)	Washer, Flat, 0.40b 1.12d .12, Stl, Pl	8
14	390880	(000000-)	Sleeve, P/M, 0.40b 0.63d 0.1l [430ss]	4
15	53466	(000000-)	Clamp, Cable, Stl, 1.50d X 1.00w, 1hole	1
16	1060765	(002100-)	Bracket, Mtg, Filter, Rh	1
17	1045434	(002100-)	Rod Wldt, Safety, Hppr Cover	1
18	28296	(002100-)	Pin, Clevis, 0.25d X 0.50l	1
19	39005	(002100-)	Pin, Cotter, .094 X 0.75	1
20	1045109	(000000-002099)	Bracket, Mtg, Filter	1

Fig. 49 - Hopper Vacuum Fan Group

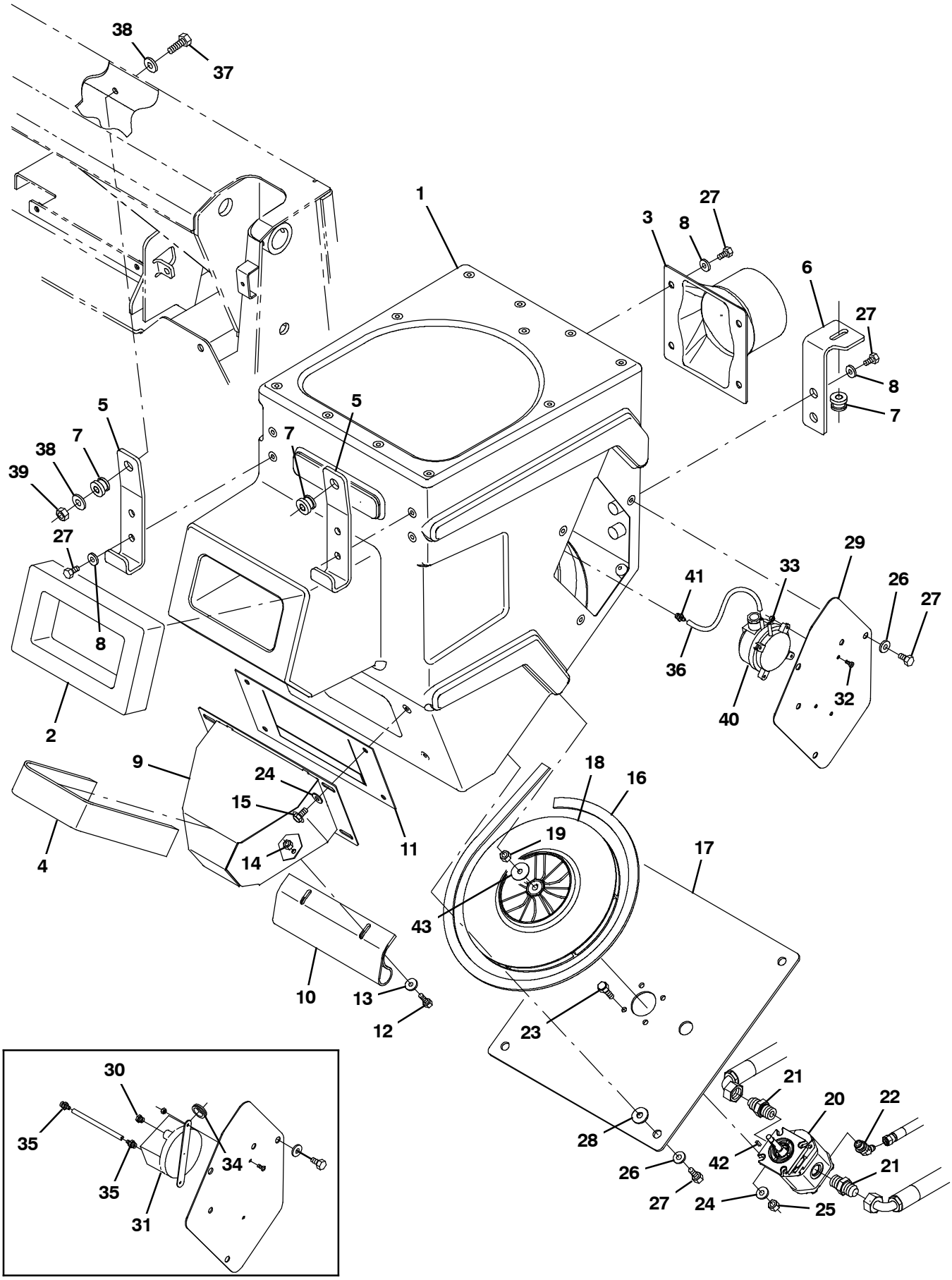

354698

Fig. 49 - Hopper Vacuum Fan Group

	Ref.	Part No.	Serial Number	Description	Qty.
	1	1035510	(000000-)	Housing, Fltr, Trimmed	1
	2	1035483	(000000-)	Gasket, 2.00, 06.30w 10.63l, Adh	1
	3	1031122	(000000-)	Duct, Outlet, Vacuum	1
	4	1048997	(000000-)	Seal, Chute, Dust	1
	5	1030622	(000000-)	Bracket, Mtg, Fltr	2
	6	1045232	(000000-)	Bracket, Mtg, Fltr	1
	7	54274	(000000-)	Isolator, Vib, Bshg, 1.1d 0.6l .4b 0.78h	3
	8	1017218	(000000-)	Washer, Flat, 0.32b 1.00d .12, Ss	10
	9	1039853	(000000-)	Duct Wldt, Chute, Dust, 34 Deg	1
	10	1039948	(000000-)	Seal, Rbr, .13, 9.06w 9.84l, Red	1
	11	1042463	(000000-)	Flap Assy, Seal, Dust Chute	1
	12	06943	(000000-)	Screw, Hex, M6 X 1.00 X 20, 8.8	2
	13	41178	(000000-)	Washer, Flat, 0.25, Fendr	2
	14	08708	(000000-)	Nut, Hex, Lock, M6 X 1.00, Nl	2
	15	16735	(000000-)	Screw, Hex, M8 X 1.25 X 16, 8.8	4
	16	9008624	(000000-)	Seal Kit, Vacuum Hsng, Replmt	1
	17	1041237	(000000-)	Plate, Mtg, Vacfan	1
	18	1039127	(000000-)	Impeller Assy, Vacfan [Coyote]	1
	19	07786	(000000-)	Nut, Hex, Std, M8 X 1	1
▽	20	1039846	(000000-)	Motor, Hyd, Gear, Ext 0.28 Rh 3000	1
▲		373712	(000000-)	Motor, Info, Repair	1
▲		373711	(000000-)	Seal Kit, Motor	1
	21	44869	(000000-002999)	Fitting, Hyd, Str, Jm08/Om08	2
	21	762445	(003000-)	Fitting, Hyd, Str, Fm08/Om08	2
	22	393215	(000000-002999)	Fitting, Hyd, E45, Jm04/Om06	1
	22	1067055	(003000-)	Fitting, Hyd, E45, Fm04/Om06	1
	23	39277	(000000-)	Screw, Hex, M8 X 1.25 X 25, 8.8	4
	24	39349	(000000-)	Washer, Flat, 0.31, Sae	8
	25	08709	(000000-)	Nut, Hex, Lock, M8 X 1.25, Nl	4
	26	32491	(000000-)	Washer, Flat, 0.31, Std	7
	27	16931	(000000-)	Screw, Hex, M8 X 1.25 X 20, 8.8	17
	28	13248	(000000-)	Washer, Flat, 0.40b 1.12d .12, Stl, Pl	6
	29	1037088	(000000-)	Plate, Cover	1
	30	82739	(000000-002105)	Fitting, Brs, Breather [02mp]	1
	31	1045128	(000000-002105)	Switch, Pressure, 12v	1
	32	06927	(000000-)	Screw, Pan, Phl, M4 X 0.70 X 16, Ss	2
	33	02850	(000000-)	Nut, Hex, Lock, M4 X 0.70, Nl	2
	34	10632-4	(000000-002105)	Grommet, Rbr, 0.62id, F/0.9h, .06 Matl	1
	35	40607	(000000-002105)	Fitting, Brs, Str, Bm03/Pm02	2
	36	09893	(000000-)	Hose, Vacuum, 0.16id X 012.0l	1
	37	39285	(000000-)	Screw, Hex, M10 X 1.50 X 40, 8.8	2
	38	32492	(000000-)	Washer, Flat, 0.38, Std	2
	39	41430	(000000-)	Nut, Hex, Lock, M10 X 1.5, Nl	2
	40	9009247	(002106-)	Switch Kit, Press, Replmt[S30]	1
	41	40607	(002106-)	Fitting, Brs, Str, Bm03/Pm02	1
	42	00960	(000000-)	Key, Sq, 0.12 X 0.12, 0.50l	2
	43	30013	(000000-)	Washer, Flat, 0.31, Fendr	1

Fig. 50 - Hopper Filter Shaker Group

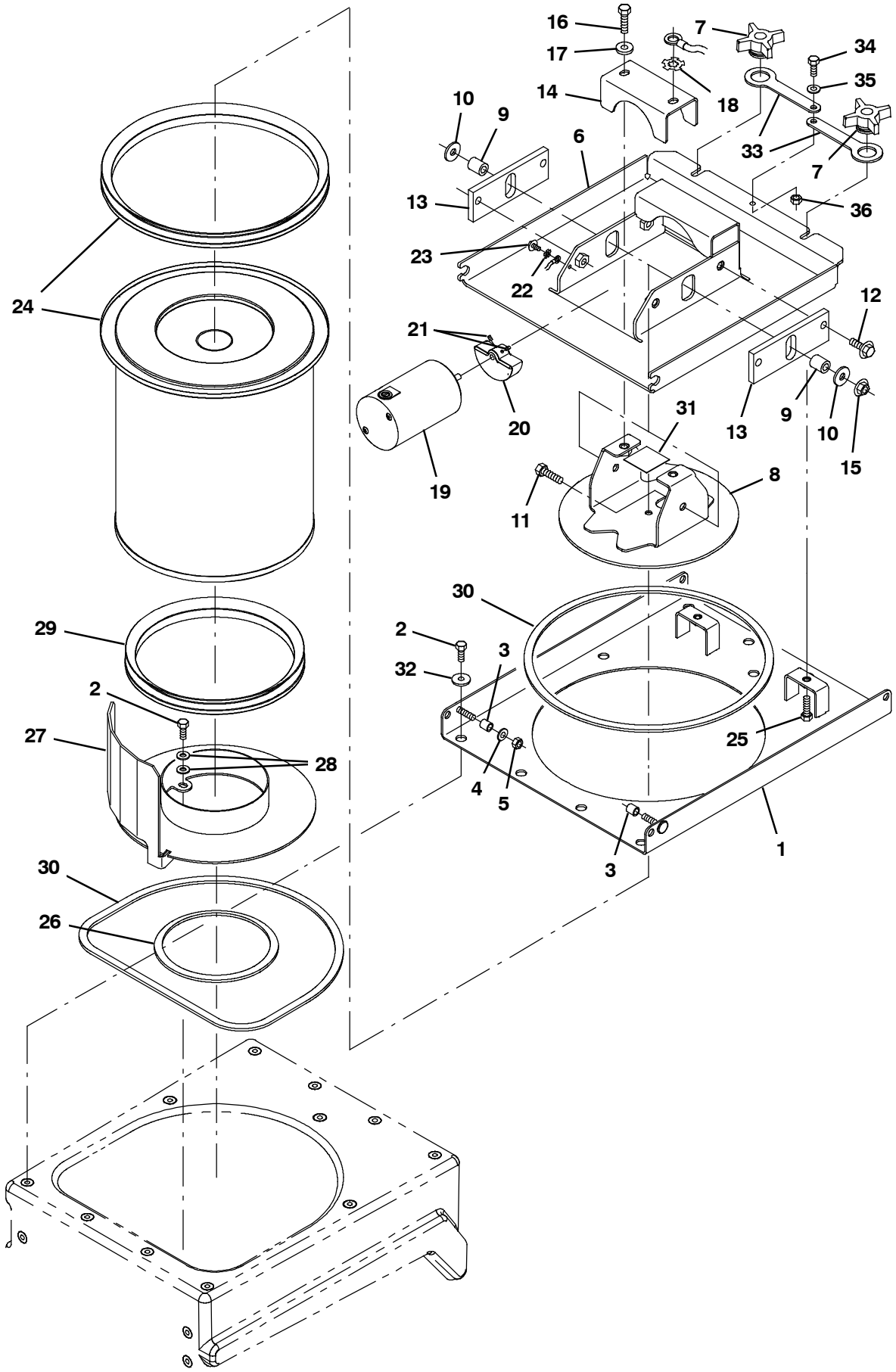

354699

Fig. 50 - Hopper Filter Shaker Group

Ref.	Part No.	Serial Number	Description	Qty.
1	1030451	(000000-)	Plate Wldt, Lower	1
2	16391	(000000-)	Screw, Hex, M8 X 1.25 X 20, 8.8	13
3	63234	(000000-)	Tube, 0.38id 0.5ood 00.6l, Ss	2
4	39349	(000000-)	Washer, Flat, 0.31, Sae	4
5	08713	(000000-)	Nut, Hex, Lock, M8 X 1.25, Nl, Ss	2
6	1043869	(000000-)	Door Wldt, Shakr	1
7	1015911	(000000-001430)	Knob, Star, 2.75d 4ear 1.1l M8x1.25,Thru	2
7	1048335	(001431-)	Knob, Star, 2.75d 4ear 1.1l M8x1.25	2
8	1040812	(000000-)	Bracket Wldt, Mtg, Shakr	1
9	1043927	(000000-)	Tube, 0.41id, 0.73od, 00.88l, Stl	2
10	13248	(000000-)	Washer, Flat, 0.40b 1.12d .12, Stl, Pl	2
11	39285	(000000-)	Screw, Hex, M10 X 1.50 X 40, 8.8	2
12	1037358	(000000-)	Screw, Hex, M10 X 1.50 X 35, 9.8, Sems	4
13	1043092	(000000-)	Plate, Guide	2
14	1040756	(000000-)	Retainer, Motor	1
15	07792	(000000-)	Nut, Hex, Flng, M10 X 1.50	2
16	39283	(000000-)	Screw, Hex, M10 X 1.50 X 25, 8.8	2
17	32485	(000000-)	Washer, Flat, 0.38, Sae	2
18	41142	(000000-)	Washer, Lock, Int-Ext, 0.38	1
19	1045061	(000000-)	Motor, Ele, 2200rpm 0.08hp 06.0a, Shakr	1
20	1053164	(000000-)	Weight, Eccentric	1
21	20634	(000000-)	Screw, Set, Soc, 10-24 X 0.25, Nl	2
22	41140	(000000-)	Washer, Lock, Int-Ext, 0.25	1
23	361339	(000000-)	Screw, Hex, M6 X 1.00 X 16, Fmg	1
24	9008919	(000000-)	Filter Assy, Cyl, Dust, Replmt [S30]	1
25	76570	(000000-)	Screw, Hex, M8 X 1.25 X 30, 8.8	2
26	1046428	(000000-)	Seal, Afmkt, Rbr, Clsd, Adh, 02ft	1
27	1042027	(000000-)	Flange Wldt, Fltr	1
28	39349	(000000-)	Washer, Flat, 0.31, Sae	4
29	1040564	(000000-)	Seal, Lip, 8.86id	1
30	1053361	(000000-)	Seal, Afmkt, Rbr, Clsd, Adh, 05f	1
31	36661	(000000-)	Gasket, Neo, .06, 02.00w 02.00l, Adh	1
32	1017218	(000000-)	Washer, Flat, 0.32b 1.00d .12, Ss	11
33	1048353	(001431-)	Strap, Rbr	2
34	16931	(001431-)	Screw, Hex, M8 X 1.25 X 20, 8.8	2
35	39349	(001431-)	Washer, Flat, 0.31, Sae	1
36	39311	(001431-)	Nut, Hex, Std, M8 X 1.25	1

Fig. 51 - Side Brush Lift Group, S30

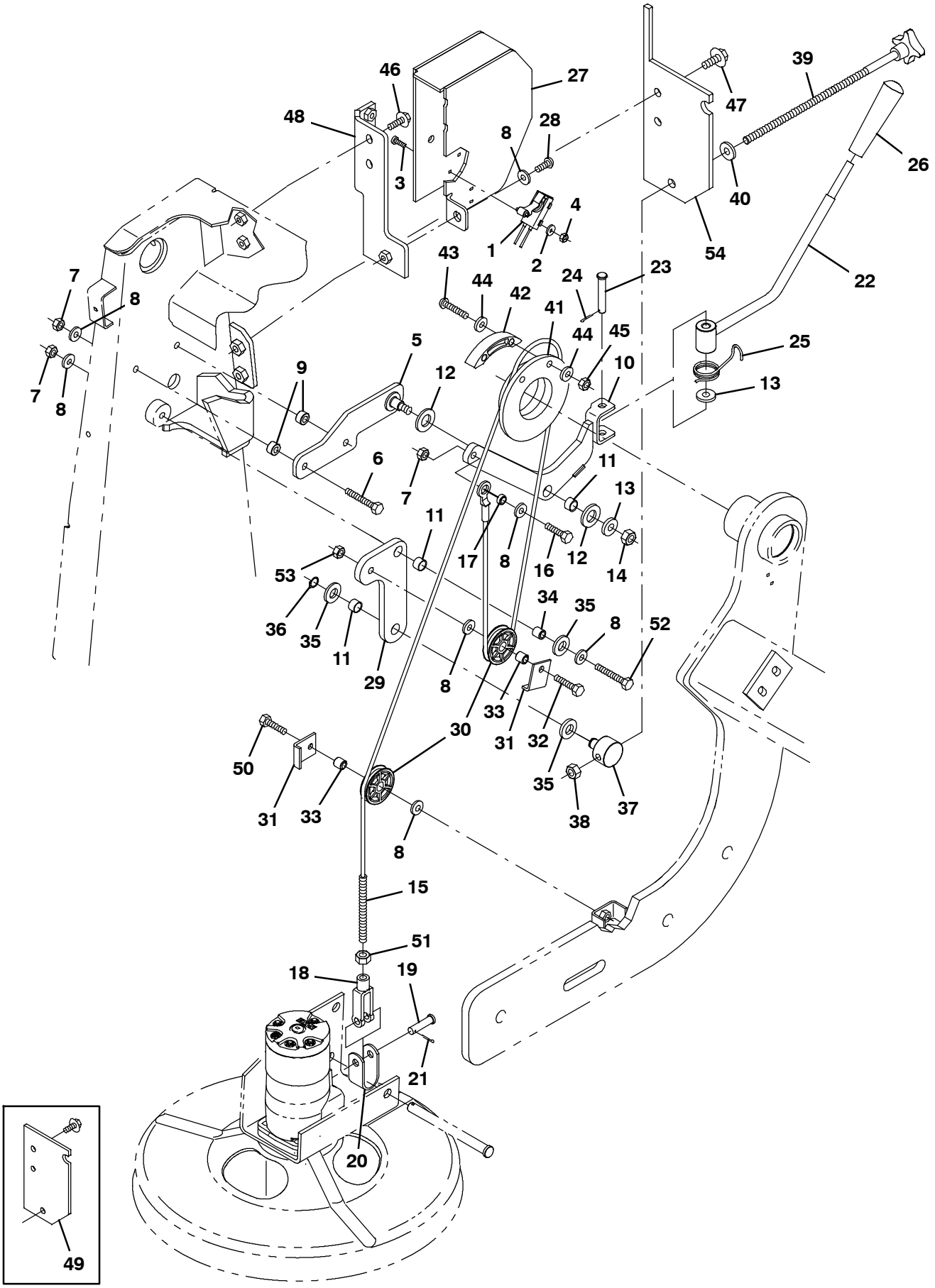

354710

Fig. 51 - Side Brush Lift Group, S30

Ref.	Part No.	Serial Number	Description	Qty.
1	367403	(000000-)	Switch, Snap, 15a Nc, Rlr	1
2	19066	(000000-)	Washer, Flat, 10	2
3	1045487	(000000-)	Screw, Pan, Phl, M5 X 0.80 X 16, Blk	2
4	06549	(000000-)	Nut, Hex, Lock, M5 X 0.80, Nl	2
5	1038329	(000000-)	Bracket Wldt, Brush, Side	1
6	41342	(000000-)	Screw, Hex, M8 X 1.25 X 40, 8.8	2
7	08709	(000000-)	Nut, Hex, Lock, M8 X 1.25, Nl	4
8	39349	(000000-)	Washer, Flat, 0.31, Sae	11
9	360460	(000000-)	Sleeve, P/M, 0.33b 0.63d 0.4l, Ss / Oil	2
10	1038372	(000000-)	Lever Wldt, Brush, Side	1
11	64173	(000000-)	Bushing, Sleeve, 0.50b 0.59d 0.38l, Stl	3
12	64425	(000000-)	Washer, Thrust, 0.61b 1.25d .06, Fgl	2
13	32485	(000000-)	Washer, Flat, 0.38, Sae	2
14	41430	(000000-)	Nut, Hex, Lock, M10 X 1.5, Nl	1
15	1036702	(000000-)	Cable, Glv .13d 063.4l .50eye / M10	1
16	76570	(000000-)	Screw, Hex, M8 X 1.25 X 30, 8.8	1
17	360801	(000000-)	Sleeve, 0.31b 0.50d 0.3l, Ss	1
18	12267	(000000-)	Clevis, Adj, 0.38pin, M10x1.5	1
19	29558	(000000-)	Pin, Clevis, 0.37d X 1.50l	1
20	59899	(000000-)	Bracket, U, .12, 1.2w 2.3 1.0l, 2/0.6h	1
21	08179	(000000-)	Pin, Cotter, .094 X 1.00	1
22	1037265	(000000-)	Arm Wldt, Lever	1
23	51813	(000000-)	Pin, Clevis, 0.37d X 2.12l	1
24	08182	(000000-)	Pin, Cotter, .125 X 1.00	1
25	1037476	(000000-)	Spring, Tors, 1.09id .11wir 03.0coil	1
26	54995	(000000-)	Knob, 1.12d 3.86l M10 X 1.5, Plstc Tpr]	1
27	1038101	(000000-)	Bracket Wldt	1
28	1031665	(000000-)	Screw, Pan, M8 X 1.25 X 25, Blk	3
29	1038060	(000000-)	Plate, Adj, Brush	1
30	369781	(000000-)	Pulley, Cable, 1.5d Nyl	2
31	54400	(000000-)	Bracket, Angle, Keeper, Cable	2
32	59658	(000000-)	Screw, Hex, M8 X 1.25 X 35, Nl, Ss	1
33	222460	(000000-)	Sleeve, P/M, 0.31b 0.50d 0.5l [430ss]	1
34	223609	(000000-)	Sleeve, P/M, 0.31b 0.50d 0.5l [430ss]	1
35	32486	(000000-)	Washer, Flat, 0.50, Sae	3
36	86953	(000000-)	Ring, Retaining, Ext, 0.50d, Ss	1
37	1039228	(000000-)	Pivot, Adj, Brush	1
38	41430	(000000-)	Nut, Hex, Lock, M10 X 1.5, Nl	1
39	1039553	(000000-)	Knob Assy,Star,1.97d 4ear M10x1.5 10.75l	1
40	763042	(000000-)	Washer, Flat, Belleville, M10	1
41	1034760	(000000-)	Pulley, Cable, 3.1d 2.30b, .19d Cable	1
42	1034763	(000000-)	Retainer, Pulley	1
43	397826	(000000-)	Screw, Btn, M8 X 1.25 X 40, Ss	2
44	01685	(000000-)	Washer, Flat, 0.38b 0.88d .08, Ss	4
45	08713	(000000-)	Nut, Hex, Lock, M8 X 1.25, Nl, Ss	2
46	1037354	(000000-)	Screw, Hex, M8 X 1.25 X 30, 9.8, Sems	2
47	1037358	(000000-)	Screw, Hex, M10 X 1.50 X 35, 9.8, Sems	2
48	1033863	(000000-002099)	Plate, Lift, Upper	1
49	1038896	(000000-)	Plate, Lift, Brush	1
50	76570	(000000-)	Screw, Hex, M8 X 1.25 X 30, 8.8	1
51	32716	(000000-)	Nut, Hex, Jam, M10 X 1.5, Ss	1
52	39278	(000000-)	Screw, Hex, M8 X 1.25 X 50, 8.8	1
53	39311	(000000-)	Nut, Hex, Std, M8 X 1.25	1
54	1060763	(002100-)	Plate, Lift, Brush	1

Fig. 52 - Side Brush Motor and Pivot Group, S30

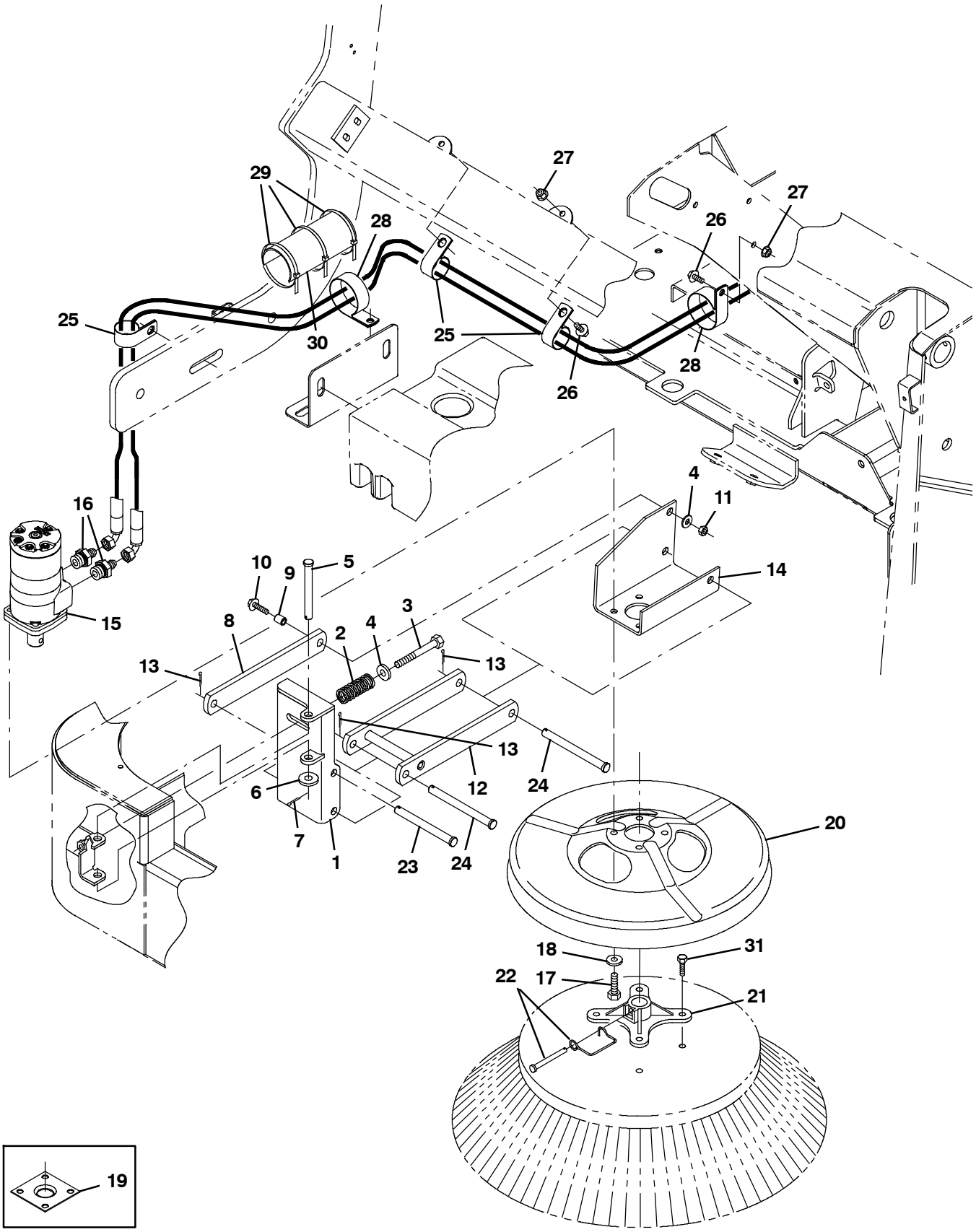

354711

Fig. 52 - Side Brush Motor and Pivot Group, S30

Ref.	Part No.	Serial Number	Description	Qty.
1	1029704	(000000-)	Pivot Wldt, Brush, Side	1
2	45261	(000000-)	Spring, Cmpr, 0.97od .11wir 02.5l	1
3	06965	(000000-)	Screw, Hex, M10 X 1.50 X 80, 8.8	1
4	32485	(000000-)	Washer, Flat, 0.38, Sae	2
5	222196	(000000-)	Pin, Clevis, 0.50d X 4.25l	1
6	32486	(000000-)	Washer, Flat, 0.50, Sae	1
7	08175	(000000-)	Pin, Cotter, .125 X 1.25	1
8	1029709	(000000-)	Arm, Brush, Side	1
9	80395	(000000-)	Sleeve, P/M, 0.31b 0.50d 0.7l [430ss]	1
10	1037355	(000000-)	Screw, Hex, M8 X 1.25 X 35, 9.8, Sems	1
11	08709	(000000-)	Nut, Hex, Lock, M8 X 1.25, Nl	1
12	1029682	(000000-)	Arm Wldt, Brush, Side	1
13	08182	(000000-)	Pin, Cotter, .125 X 1.00	3
14	1029674	(000000-)	Bracket, Mtg, Motor, Side Brush	1
15	379607	(000000-002133)	Motor, Hyd, Gear, Int 17.9 Bi-Dir 1500 (See Breakdowns)	1
15	1057338	(002134-)	Motor, Hyd, Gear, Int 17.9 Bi-Dir 2500	1
16	47508	(000000-002999)	Fitting, Hyd, Str, Jm06/Om10	2
16	762439	(003000-)	Fitting, Hyd, Str, Fm06/Om10	2
17	46559	(000000-)	Screw, Hex, .38-16 X 1.25, Nl	4
18	32492	(000000-)	Washer, Flat, 0.38, Std	4
19	16082	(000000-002133)	Guard, String, Motor, Brush	1
20	1054256	(000000-)	Guard, Brush	1
21	47501	(000000-)	Hub, Adapter, Brush, 1.00b	1
22	84581	(000000-)	Pin Assy, Side Brush W/ Clip	1
23	51538	(000000-)	Pin, Clevis, 0.50d X 5.00l	1
24	51225	(000000-)	Pin, Clevis, 0.50d X 5.50l	2
25	53468	(000000-)	Clamp, Cable, Stl, 1.75d X 1.00w, 1hole	3
26	1037346	(000000-)	Screw, Hex, M8 X 1.25 X 25, 9.8, Sems	2
27	07791	(000000-)	Nut, Hex, Flng, M8 X 1.25	2
28	70157	(000000-)	Clamp, Cable, Ss, 2.50d X 1.00w, 1hole	2
29	44961	(000000-)	Tie, Cable, Nyl, 14.5l .30w 4.0 Max D	3
30	762179	(000000-)	Guard, Hose, Rbr, 5.0l	1
31	39394	(000000-)	Screw, Hex, .31-09 X 1.25, Wood	4

Fig. 53 - Side Brush Motor Group, S30 XP and X4

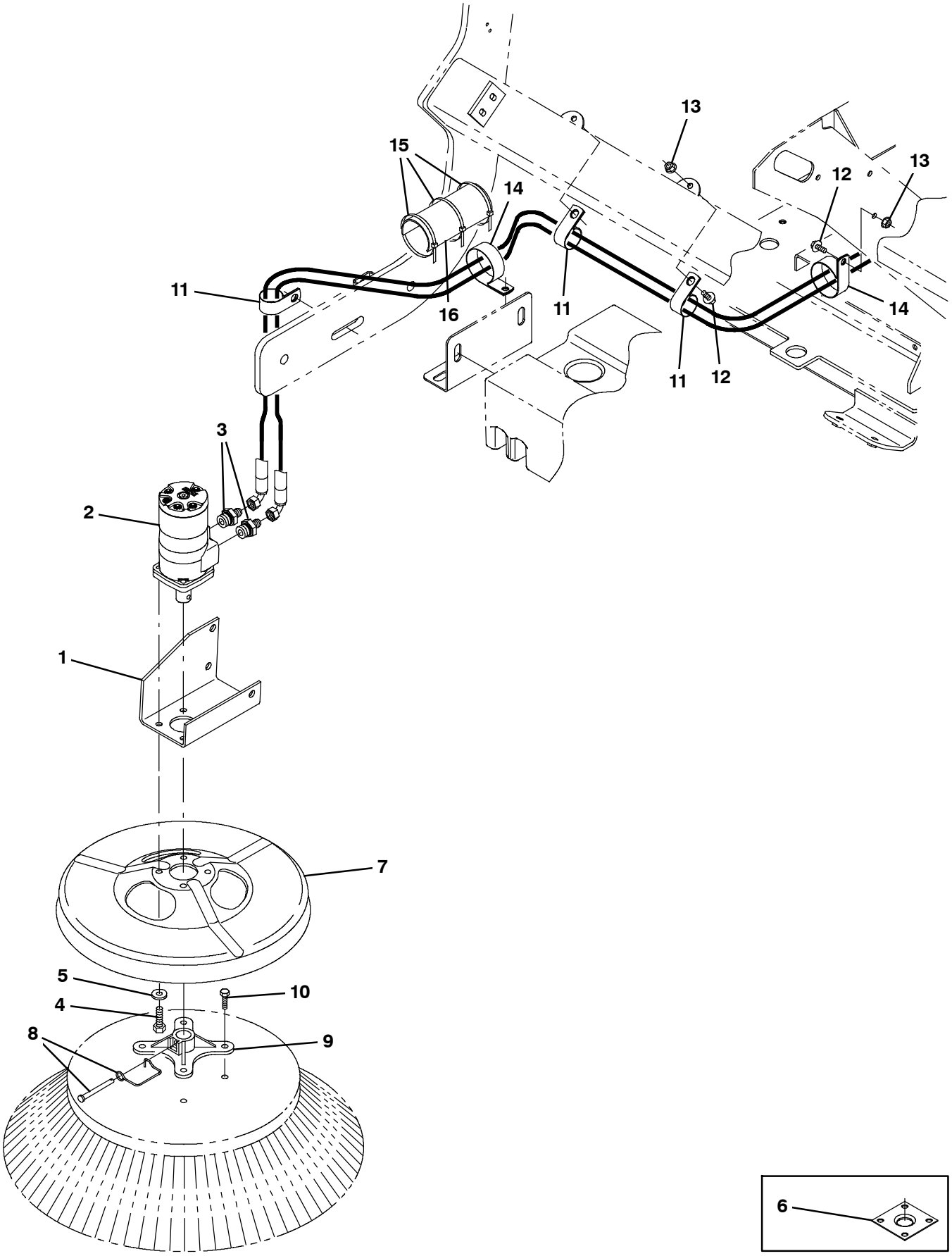

354741

Fig. 53 - Side Brush Motor Group, S30 XP and X4

Ref.	Part No.	Serial Number	Description	Qty.
1	1029674	(000000-)	Bracket, Mtg, Motor, Side Brush	1
2	379607	(000000-002133)	Motor, Hyd, Gear, Int 17.9 Bi-Dir 1500 (See Breakdowns)	1
2	1057338	(002134-)	Motor, Hyd, Gear, Int 17.9 Bi-Dir 2500	1
3	47508	(000000-002999)	Fitting, Hyd, Str, Jm06/Om10	2
3	762439	(003000-)	Fitting, Hyd, Str, Fm06/Om10	2
4	46559	(000000-)	Screw, Hex, .38-16 X 1.25, Nl	4
5	32492	(000000-)	Washer, Flat, 0.38, Std	4
6	16082	(000000-002133)	Guard, String, Motor, Brush	1
7	1054256	(000000-)	Guard, Brush	1
8	84581	(000000-)	Pin Assy, Side Brush W/ Clip	1
9	47501	(000000-)	Hub, Adapter, Brush, 1.00b	1
10	39394	(000000-)	Screw, Hex, .31-09 X 1.25, Wood	4
11	53468	(000000-)	Clamp, Cable, Stl, 1.75d X 1.00w, 1hole	3
12	1037346	(000000-)	Screw, Hex, M8 X 1.25 X 25, 9.8, Sems	3
13	07791	(000000-)	Nut, Hex, Flng, M8 X 1.25	2
14	70157	(000000-)	Clamp, Cable, Ss, 2.50d X 1.00w, 1hole	2
15	44961	(000000-)	Tie, Cable, Nyl, 14.5l .30w 4.0 Max D	3
16	762179	(000000-)	Guard, Hose, Rbr, 5.0l	1

Fig. 54 - Side Brush Lift and Pivot Group, S30 XP and X4

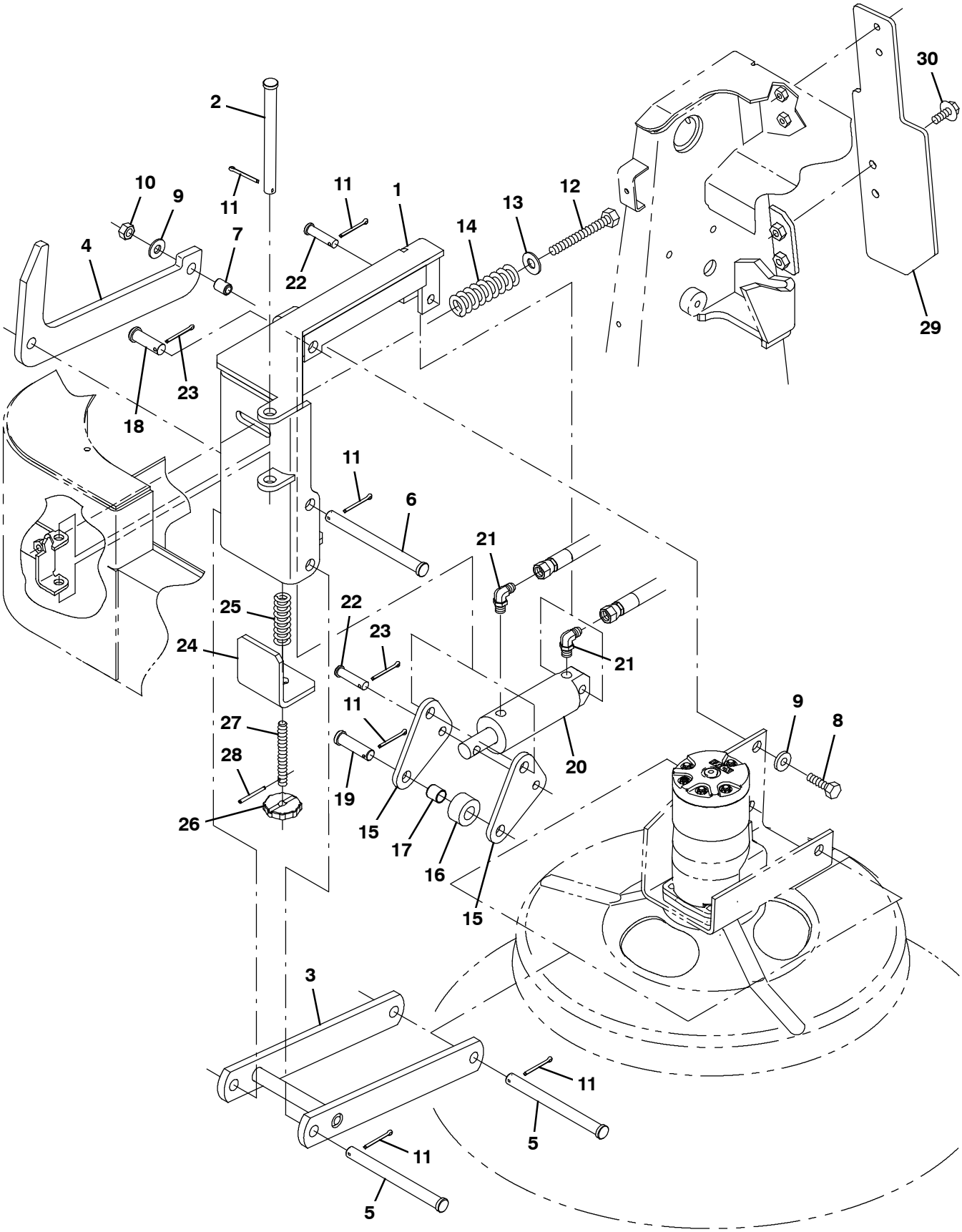

354738

Fig. 54 - Side Brush Lift and Pivot Group, S30 XP and X4

Ref.	Part No.	Serial Number	Description	Qty.
1	1039628	(000000-)	Pivot Wldt, Brush, Side	1
2	222196	(000000-)	Pin, Clevis, 0.50d X 4.25l	1
3	1029682	(000000-)	Arm Wldt, Brush, Side	1
4	1026459	(000000-)	Arm, Linkage, Side Brush	1
5	51225	(000000-)	Pin, Clevis, 0.50d X 5.50l	2
6	51538	(000000-)	Pin, Clevis, 0.50d X 5.00l	1
7	80395	(000000-)	Sleeve, P/M, 0.31b 0.50d 0.7l [430ss]	1
8	76570	(000000-)	Screw, Hex, M8 X 1.25 X 30, 8.8	1
9	32491	(000000-)	Washer, Flat, 0.31, Std	2
10	08709	(000000-)	Nut, Hex, Lock, M8 X 1.25, Nl	1
11	08182	(000000-)	Pin, Cotter, .125 X 1.00	6
12	06963	(000000-)	Screw, Hex, M10 X 1.5 X 60, 8.8	1
13	32492	(000000-)	Washer, Flat, 0.38, Std	1
14	45261	(000000-)	Spring, Cmpr, 0.97od .11wir 02.5l	1
15	1026462	(000000-)	Lever, Lift, Brush	2
16	1026525	(000000-)	Tube, 0.59id 1.25od 00.6l, Stl	1
17	59634	(000000-)	Bushing, Sleeve, 0.50b 0.59d 0.62l, Fgl	1
18	51534	(000000-)	Pin, Clevis, 0.50d X 2.00l	1
19	43290	(000000-)	Pin, Clevis, 0.50d X 1.75l	1
20	1041034	(000000-)	Cylinder, Hyd, 1.5b 06.3l 01.50strk 2500	1
21	77097	(000000-002999)	Fitting, Hyd, E90, Jm04/Om04	2
21	762427	(003000-)	Fitting, Hyd, E90, Fm04/Om04	2
22	29558	(000000-)	Pin, Clevis, 0.37d X 1.50l	2
23	39005	(000000-)	Pin, Cotter, .094 X 0.75	2
24	1036333	(000000-)	Angle	1
25	22290	(000000-)	Spring, Cmpr, 0.72od .06wir 02.3l	1
26	1039141	(000000-)	Knob	1
27	1039199	(000000-)	Rod, Thrd, M10x1.5 80l	1
28	13865	(000000-)	Pin, Roll, .125d X 1.25l, .125/.129	1
29	1034501	(000000-002099)	Plate,Lift,Premium	1
29	1060764	(002100-)	Plate,Lift,Premium	1
30	1037354	(000000-)	Screw, Hex, M8 X 1.25 X 30, 9.8, Sems	4

Fig. 55 - Main Brush Lift Group, S30

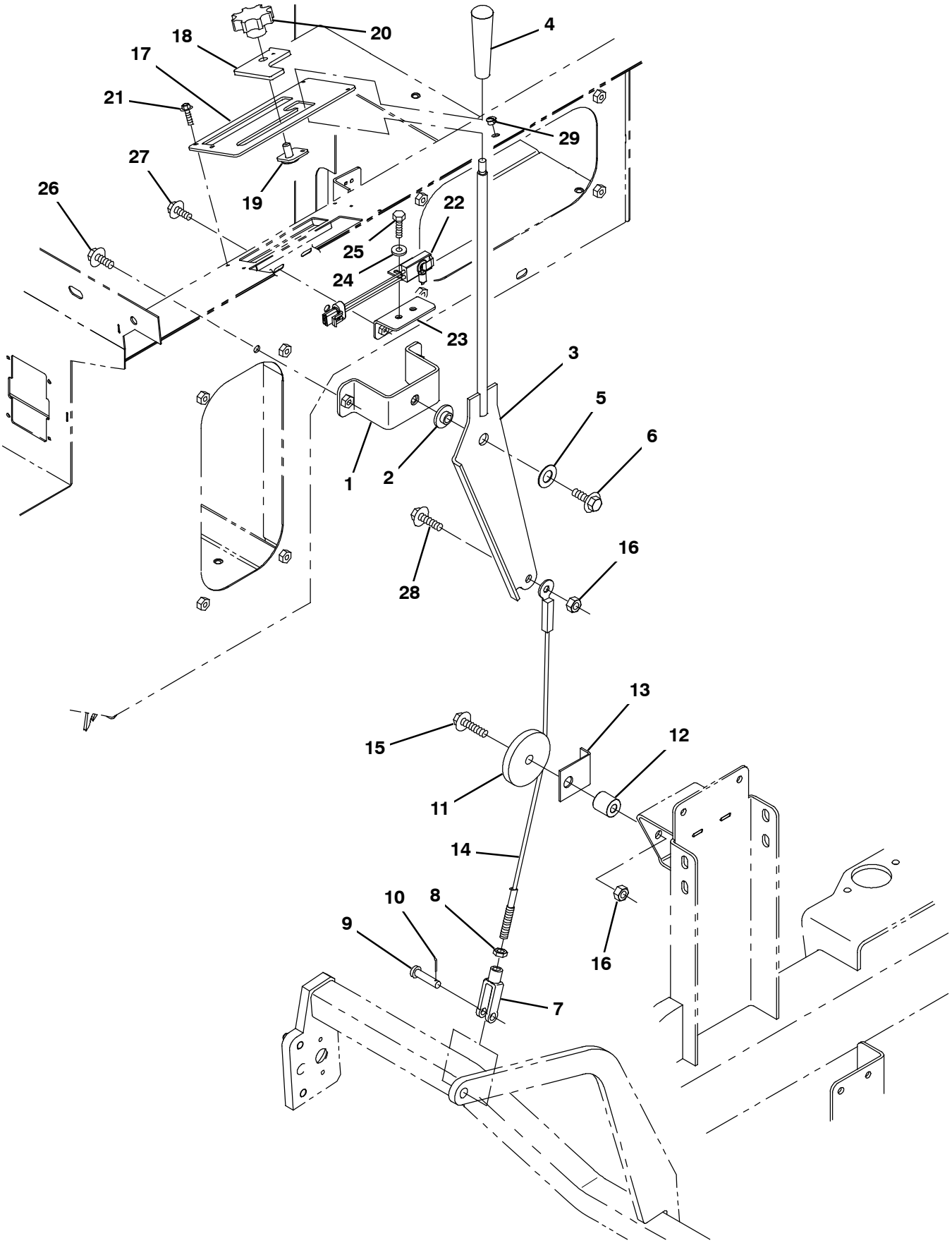

354700

Fig. 55 - Main Brush Lift Group, S30

Ref.	Part No.	Serial Number	Description	Qty.
1	1042785	(000000-)	Bracket, Lift	1
2	363087	(000000-)	Bushing, Flng, 0.44b 1.25d 0.25l	1
3	1041539	(000000-)	Lever Wldt, Lift, Brush, Main	1
4	54995	(000000-)	Knob, 1.12d 3.86l M10 X 1.5, Plstc Tpr]	1
5	07450	(000000-)	Bearing, Thrust, 0.66b 1.25d 0.06w	1
6	1037358	(000000-)	Screw, Hex, M10 X 1.50 X 35, 9.8, Sems	1
7	12267	(000000-)	Clevis, Adj, 0.38pin, M10x1.5	1
8	32716	(000000-)	Nut, Hex, Jam, M10 X 1.5, Ss	1
9	86240	(000000-)	Pin, Clevis, 0.38d X 1.13l	1
10	08179	(000000-)	Pin, Cotter, .094 X 1.00	1
11	379684	(000000-)	Pulley Assy, Cable, 2.8d 0.50b	1
12	222460	(000000-)	Sleeve, P/M, 0.31b 0.50d 0.5l [430ss]	1
13	379686	(000000-)	Angle, Keeper, Cable	1
14	1041123	(000000-)	Cable, Glv .19 24.5l .3 Eye / M10	1
15	1037355	(000000-)	Screw, Hex, M8 X 1.25 X 35, 9.8, Sems	1
16	08709	(000000-)	Nut, Hex, Lock, M8 X 1.25, Nl	1
17	1046048	(000000-)	Panel Wldt, Handle, Lift	1
18	1042855	(000000-)	Plate Wldt, Brush, Adj	1
19	1046052	(000000-)	Plate Wldt, Stop [S30]	1
20	383205	(000000-)	Knob, Star, 2.20d 8ear 1.1l M10x1.5, Nyl	1
21	1045964	(000000-)	Screw, Hex, M4 X 0.70 X 10, Fmg, Blk	4
22	1040019	(000000-)	Switch, Limit, 15a, Nc	1
23	1040753	(000000-)	Bracket, Switch	1
24	19066	(000000-)	Washer, Flat, 10	2
25	09244	(000000-)	Screw, Hex, M5 X 0.80 X 16, 8.8	2
26	1037346	(000000-)	Screw, Hex, M8 X 1.25 X 25, 9.8, Sems	2
27	1040467	(000000-)	Screw, Hex, M6 X 1.0 X 20, 9.8, Sems	2
28	1037354	(000000-)	Screw, Hex, M8 X 1.25 X 30, 9.8, Sems	1
29	33807	(000000-)	Plug, Hole, Rnd, 0.44h .03-.12, Blk Nyl	1

Fig. 56 - Main Brush Lift Group, S30 XP and X4

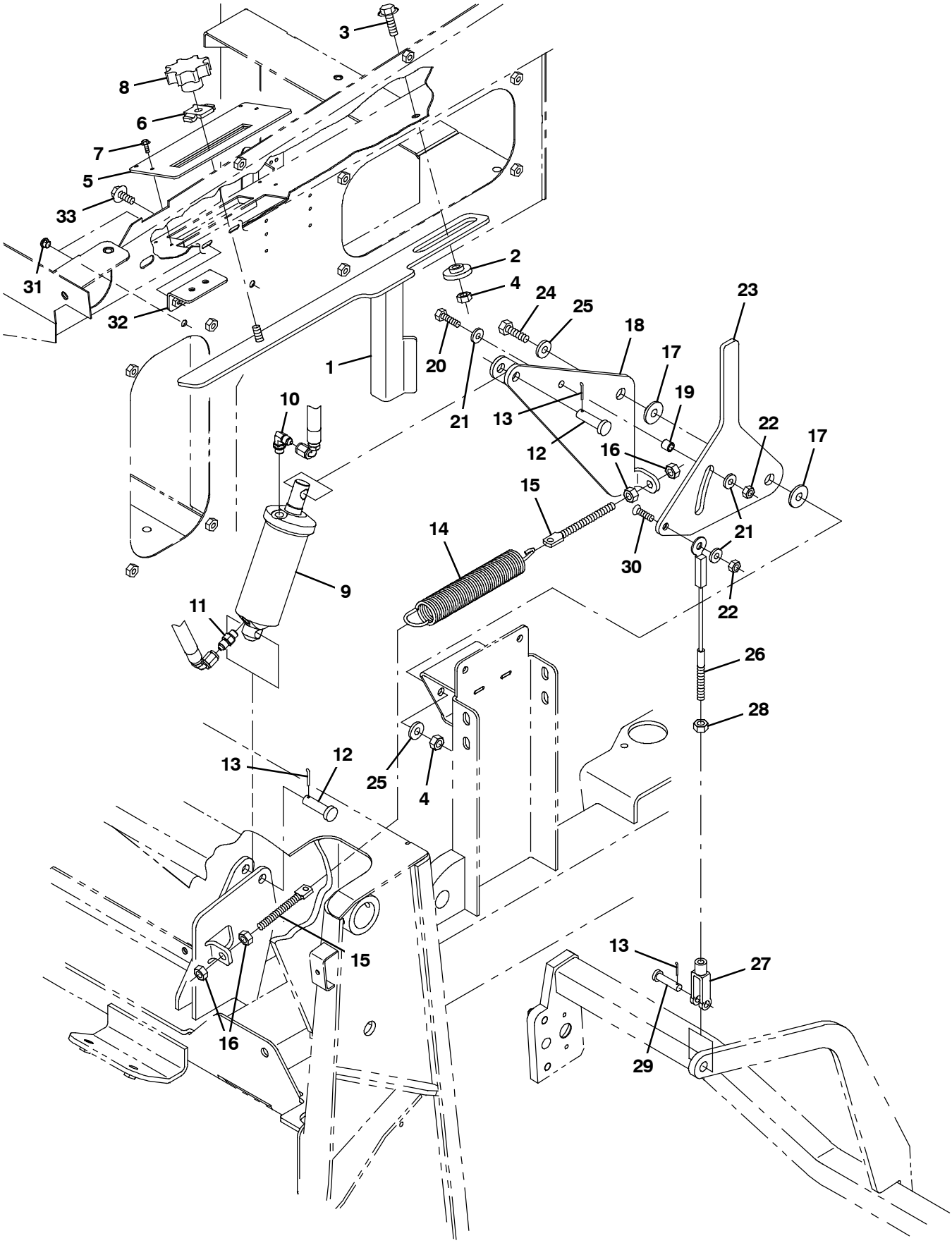

354749

Fig. 56 - Main Brush Lift Group, S30 XP and X4

Ref.	Part No.	Serial Number	Description	Qty.
1	1032432	(000000-)	Plate Wldt, Brush, Adj	1
2	1032429	(000000-)	Retainer, Stop	1
3	1037358	(000000-)	Screw, Hex, M10 X 1.50 X 35, 9.8, Sems	1
4	41430	(000000-)	Nut, Hex, Lock, M10 X 1.5, Nl	2
5	1032449	(000000-)	Panel Wldt, Lift	1
6	1005740	(000000-)	Plate, Brush, Adj	1
7	1045964	(000000-)	Screw, Hex, M4 X 0.70 X 10, Fmg, Blk	4
8	383205	(000000-)	Knob, Star, 2.20d 8ear 1.1l M10x1.5, Nyl	1
9	1038176	(000000-)	Cylinder, Hyd, 2.0b 08.0l 04.00strk 2500	1
10	77097	(000000-002999)	Fitting, Hyd, E90, Jm04/Om04	1
10	762427	(003000-)	Fitting, Hyd, E90, Fm04/Om04	1
11	55586	(000000-002999)	Fitting, Hyd, Str, Jm04/Om04	1
11	762428	(003000-)	Fitting, Hyd, Str, Fm04/Om04	1
12	43290	(000000-)	Pin, Clevis, 0.50d X 1.75l	2
13	08182	(000000-)	Pin, Cotter, .125 X 1.00	3
14	368197	(000000-)	Spring, Extn, 1.39od 0.15wir 09.0l	1
15	1007220	(000000-)	Bolt, Eye, M10 X 1.50 X 117mm, 08.00 Eye	2
16	39312	(000000-)	Nut, Hex, Std, M10 X 1.50	4
17	363087	(000000-)	Bushing, Flng, 0.44b 1.25d 0.25l	2
18	1035400	(000000-)	Bracket Wldt, Mtg, Cyl	1
19	222460	(000000-)	Sleeve, P/M, 0.31b 0.50d 0.5l [430ss]	1
20	06955	(000000-)	Screw, Hex, M8 X 1.25 X 35, 8.8	1
21	32491	(000000-)	Washer, Flat, 0.31, Std	3
22	08709	(000000-)	Nut, Hex, Lock, M8 X 1.25, Nl	2
23	1041446	(000000-)	Bracket, Brush, Stop Adj	1
24	06962	(000000-)	Screw, Hex, M10 X 1.50 X 45, 8.8	1
25	32492	(000000-)	Washer, Flat, 0.38, Std	2
26	383194	(000000-)	Cable, Glv .19d 009.88l .38eye / M10	1
27	12267	(000000-)	Clevis, Adj, 0.38pin, M10x1.5	1
28	32716	(000000-)	Nut, Hex, Jam, M10 X 1.5, Ss	1
29	86240	(000000-)	Pin, Clevis, 0.38d X 1.13l	1
30	07810	(000000-)	Screw, Flt, Soc, M8 X 1.25 X 25, 10.9	1
31	01314	(000000-)	Plug, Hole, Rnd, 0.38h .03-.12, Blk Nyl	2
32	1040753	(000000-)	Bracket, Switch	1
33	1040467	(000000-)	Screw, Hex, M6 X 1.00 X 20, 9.8, Sems	2

Fig. 57 - Main Brush Drive Group

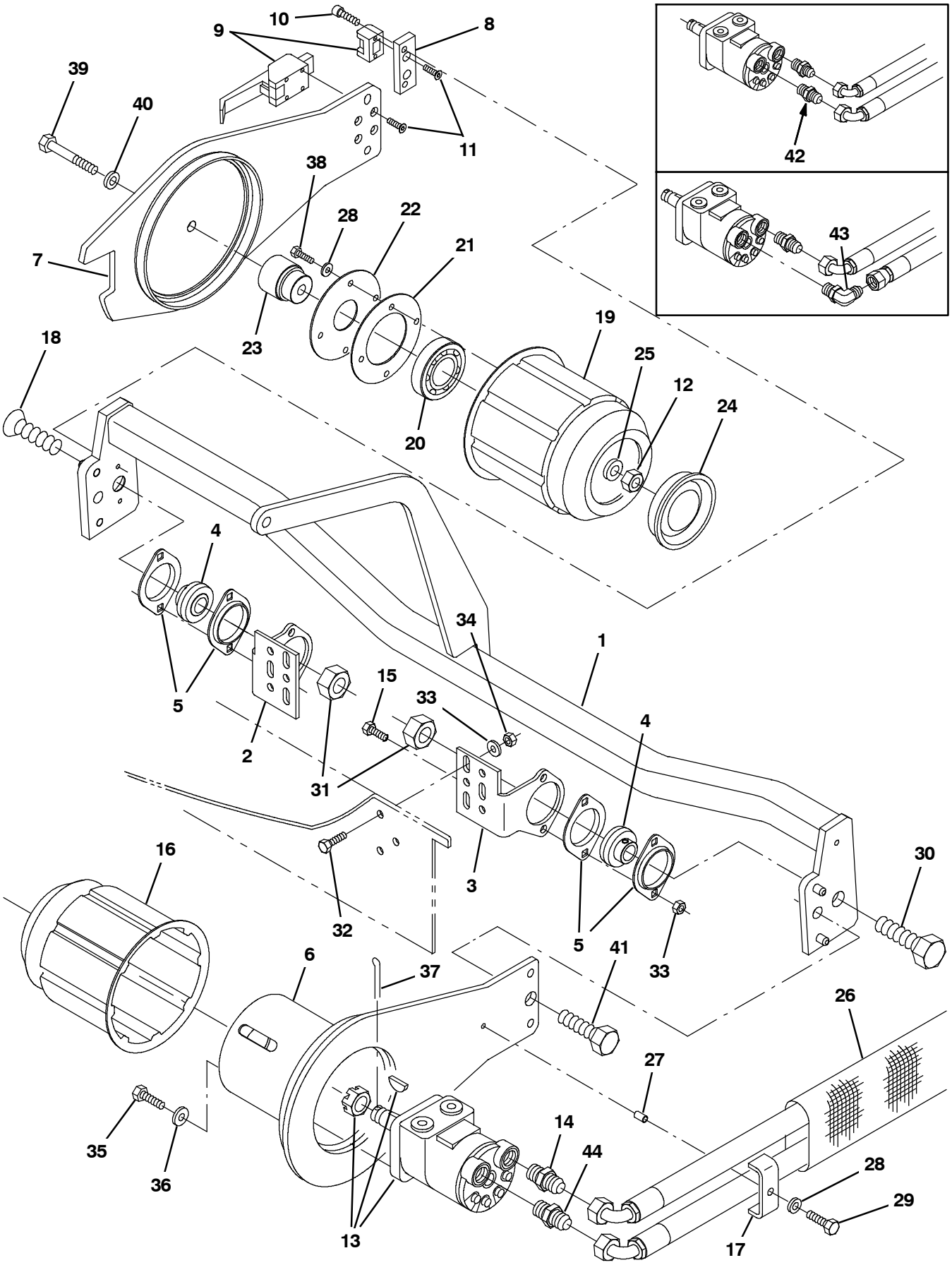

354701

Fig. 57 - Main Brush Drive Group

	Ref.	Part No.	Serial Number	Description	Qty.
	1	1039501	(000000-)	Tube Wldt	1
	2	383142	(000000-)	Bracket, Mtg, Rh	1
	3	383143	(000000-)	Bracket, Mtg, Lh	1
	4	25887	(000000-)	Bearing, W/ Collar, 0.75b 1.85d 1.06w	2
	5	35973	(000000-)	Flange, Brg, 1.9id 2h	4
	6	383139	(000000-)	Arm Wldt, Brush, Main, Drive, Lh	1
▽	7	377249	(000000-)	Arm, Brush, Main, W/ Label	1
▲		383203	(000000-)	Label, Info, Arm, Brush	1
	8	54204	(000000-)	Plate, Mtg	1
	9	54878	(000000-)	Latch, Cmpr, M5 X 0.8 Blk	1
	10	57824	(000000-)	Screw, Soc, M6 X 1.00 X 20, 12.9, Nl	2
	11	09120	(000000-)	Screw, Flt, Soc, M5 X 0.80 X 16, 10.9	6
	12	08711	(000000-)	Nut, Hex, Lock, M12 X 1.75, Nl	1
	13	379608	(000000-002133)	Motor, Hyd, Gear, Int 02.8 Bi-Dir 1500 (See Breakdowns)	1
	13	1057337	(002134-)	Motor, Hyd, Gear, Int 02.8 Bi-Dir 2500	1
	14	44869	(000000-002999)	Fitting, Hyd, Str, Jm08/Om08	1
	14	762445	(003000-)	Fitting, Hyd, Str, Fm08/Om08	1
	15	16931	(000000-)	Screw, Hex, M8 X 1.25 X 20, 8.8	4
	16	87631	(000000-002133)	Plug Wldt, Drive, Brush	1
	16	1057643	(002134-)	Plug Wldt, Drive, Brush	1
	17	51715	(000000-)	Bracket, U, .19, 2.8w 0.9 1.0l, 1/0.3h	1
	18	1007807	(000000-)	Screw, Flt, Soc, .75-10 X 2.50, Al	1
	19	55779	(000000-)	Plug Wldt, Idler, Brush	1
	20	24899	(000000-)	Bearing, Ball, 1.38b 2.83d 0.67w	1
	21	30252	(000000-)	Disc, 0.08, 04.39d 02.56b, 4/.28h 3.8bc	1
	22	30253	(000000-)	Disc, 0.06, 04.39d 01.67b, 4/.30h 3.8bc	1
	23	30251	(000000-)	Shaft, Idler, Plug, Brush	1
	24	30255	(000000-)	Cap, Vinyl, 3.28d 0.45l	1
	25	51564	(000000-)	Washer, Flat, 0.53b 1.75d .12, Stl, Pl	1
	26	13773	(000000-)	Sleeve, Nyl, #27 20.0l	1
	27	56228	(000000-)	Tube, Plstc, 0.25id 0.31od 00.5l, Blk	1
	28	01684	(000000-)	Washer, Flat, 0.27b 0.69d .05, Ss	1
	29	07805	(000000-)	Screw, Hex, M6 X 1.00 X 35, Ss	1
	30	39395	(000000-)	Screw, Hex, .75-10 X 2.50, Fl	1
	31	32987	(000000-)	Nut, Hex, Lock, .75-10, Nl	2
	32	09010	(000000-)	Screw, Hex, M8 X 1.25 X 25, Ss	6
	33	08709	(000000-)	Nut, Hex, Lock, M8 X 1.25, Nl	10
	34	41186	(000000-)	Washer, Flat, Belleville, .31	3
	35	01762	(000000-)	Screw, Hex, .38-16 X 0.75, Nl	4
	36	32485	(000000-)	Washer, Flat, 0.38, Sae	4
	37	08175	(000000-)	Pin, Cotter, .125 X 1.25	1
	38	12277	(000000-)	Screw, Hex, M6 X 1.00 X 20, Nl, Ss	4
	39	06975	(000000-)	Screw, Hex, M12 X 1.75 X 90, 8.8	1
	40	36328	(000000-)	Washer, Flat, Belleville, .50	1
	41	06977	(000000-)	Screw, Hex, M16 X 2.00 X 20, 8.8	1
	42	44869	(000000-001312)	Fitting, Hyd, Str, Jm08/Om08	1
	43	1046890	(001313-002999)	Fitting, Hyd, E90, Jm08/Om08, Med	1
	43	1067052	(003000-003440)	Fitting, Hyd, E90, Fm08/Om08, Med	1
	44	762445	(003441-)	Fitting, Hyd, Str, Fm08/Om08	1

Fig. 58 - Hydraulic Schematic, S30 and XP

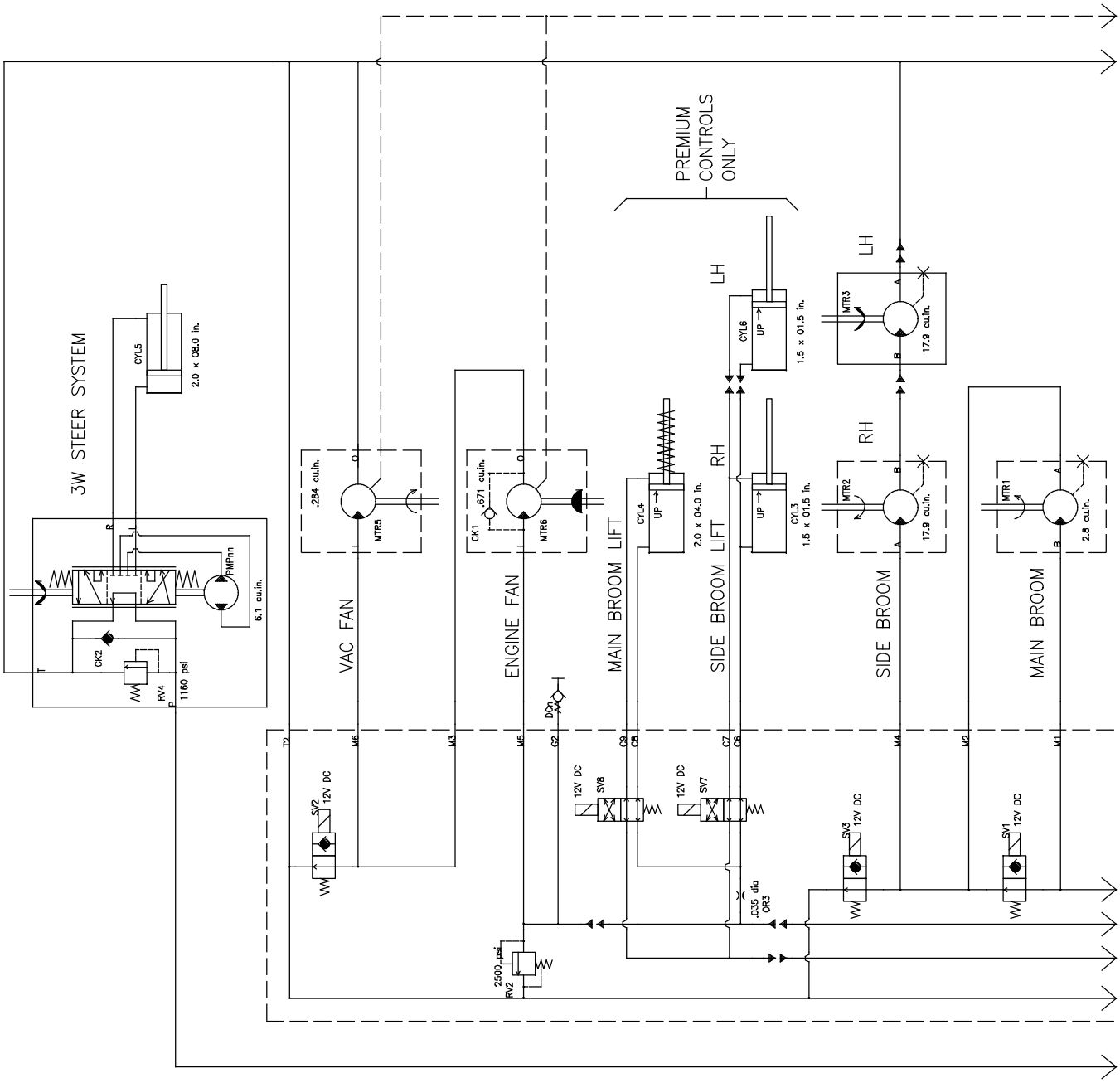

1027521- 354734

Fig. 58 - Hydraulic Schematic, S30 and XP

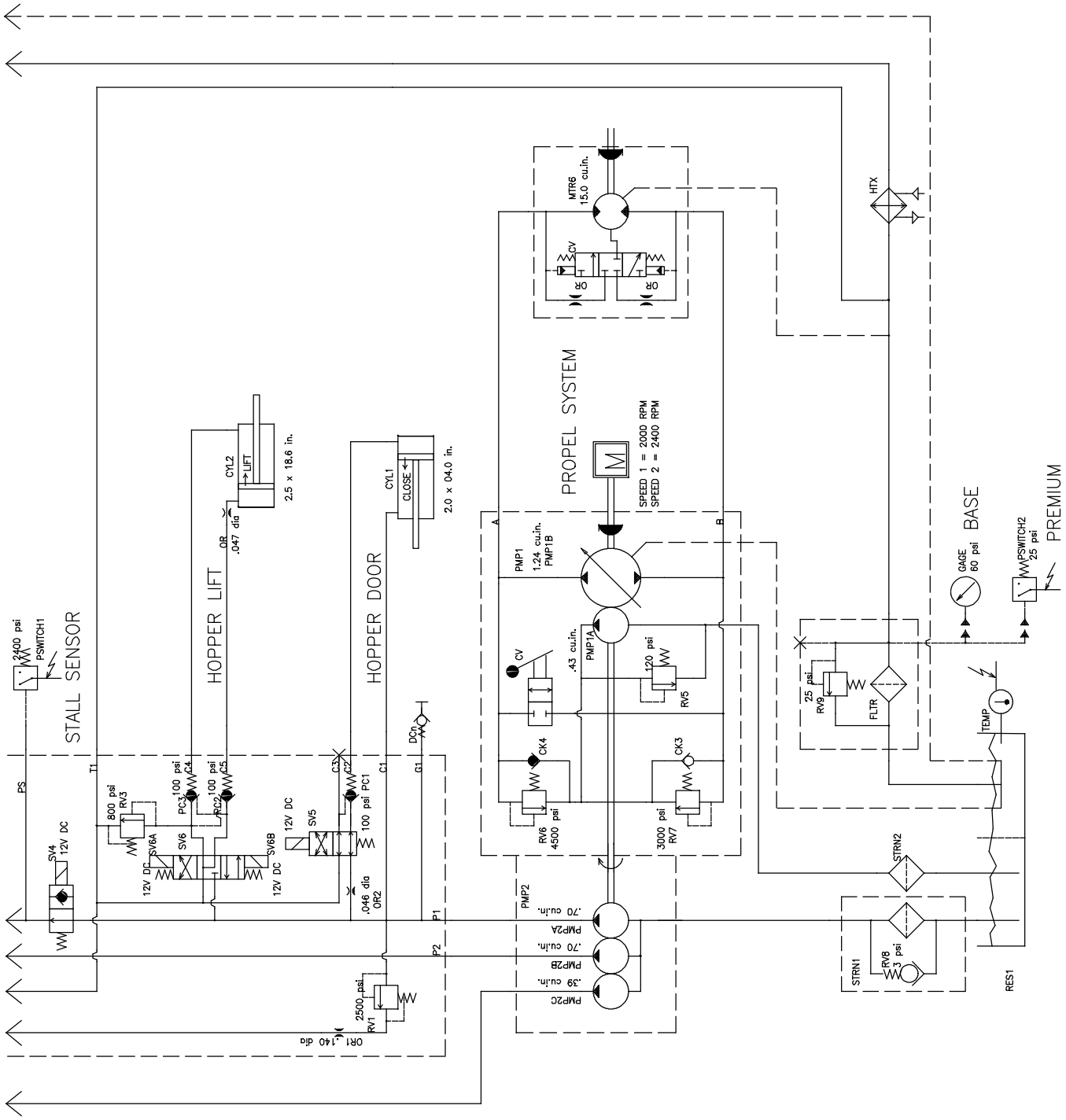

1027521- 354734

Fig. 59 - Hydraulic Schematic, S30 X4

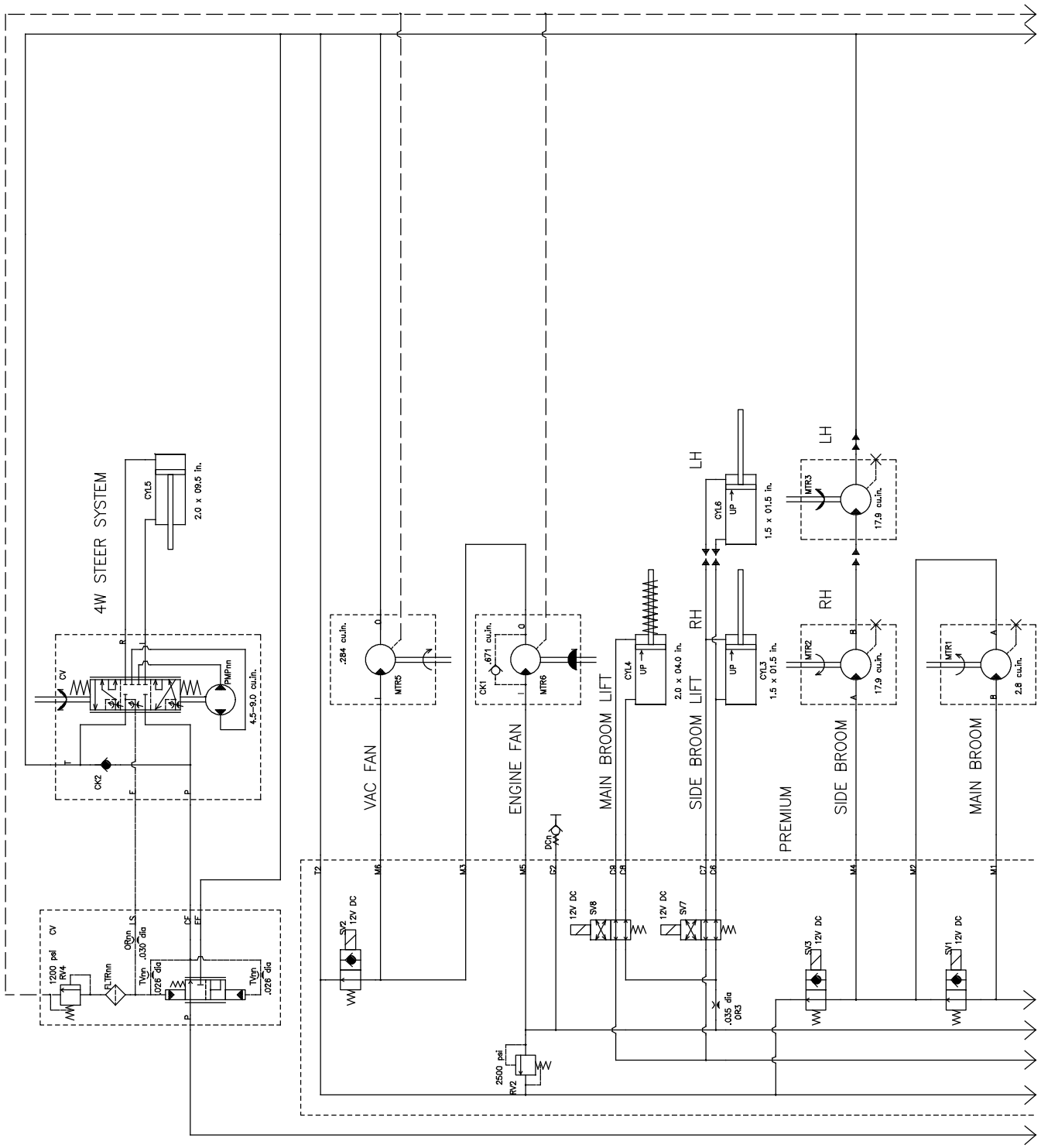

1027521- 354735

Fig. 59 - Hydraulic Schematic, S30 X4

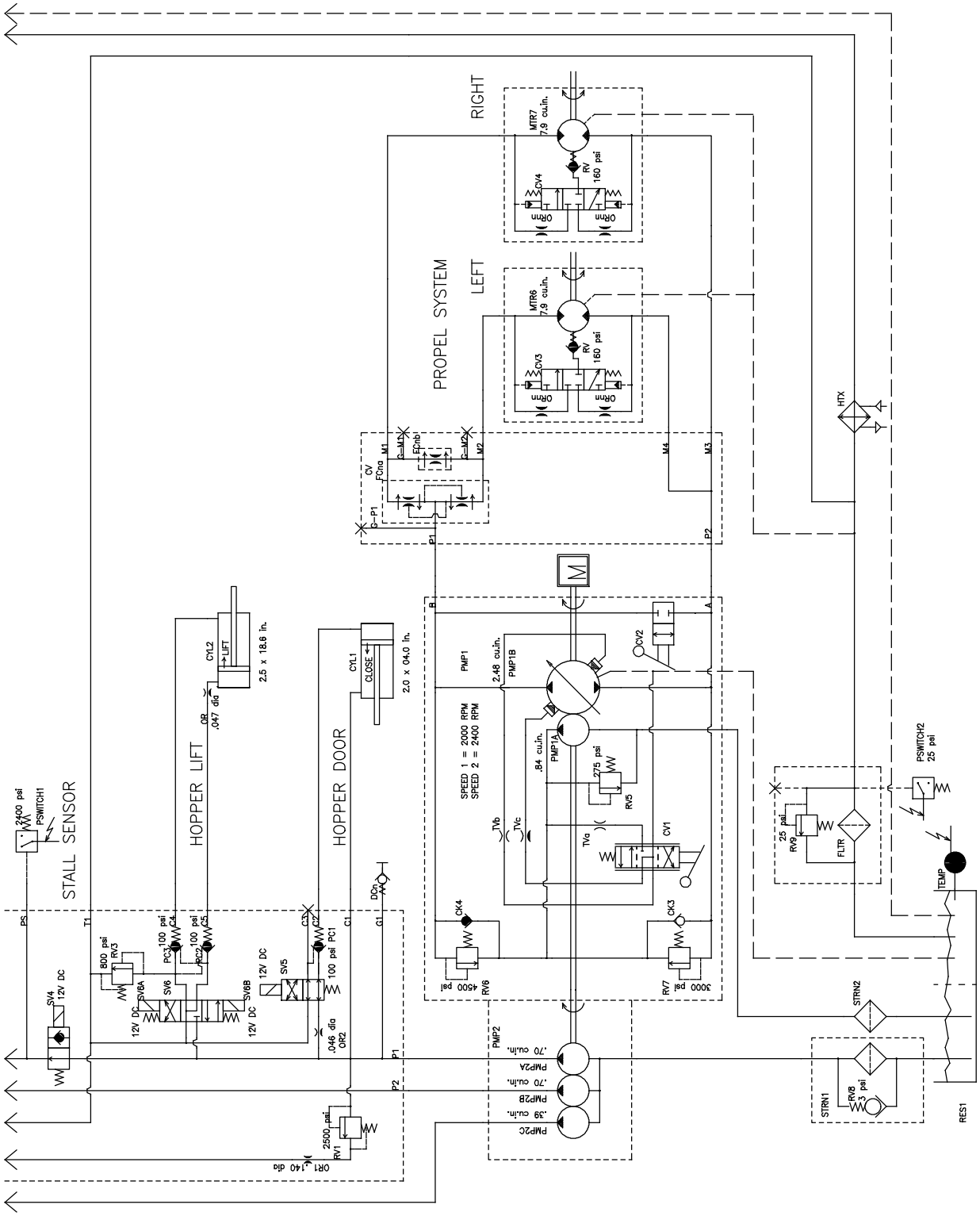

1027521- 354735

Fig. 60 - Hydraulic Hose Group, S30 (000000-002999)

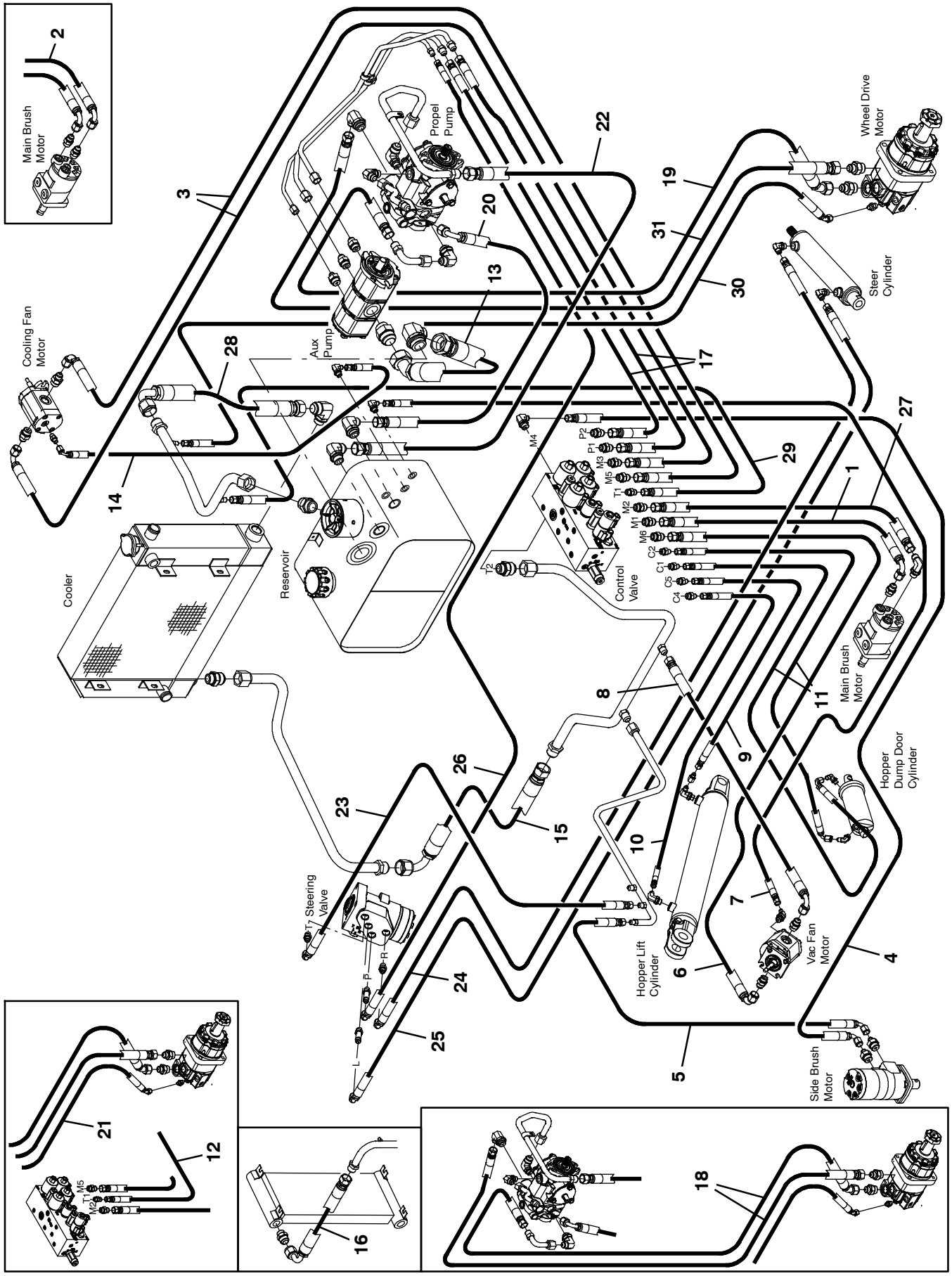

354737

Fig. 60 - Hydraulic Hose Group, S30 (000000-002999)

Ref.	Part No.	Serial Number	Description	Qty.
1	1039753	(000000-002999)	Hose, Hyd, Tc08, Jf08str/Jf08e90, 42.0	1
2	1041383	(000000-001312)	Hose, Hyd, Tc08, Jf08e90/Jf08str, 40.0	1
3	1041386	(000000-002999)	Hose, Hyd, Tc08, Jf08e90/Jf08str, 52.0	2
4	396213	(000000-002999)	Hose, Hyd, Tc06, Jf06e90/Jf06str, 134.0	1
5	1041941	(000000-002999)	Hose, Hyd, Tc06, Jf06e90/Jf06str, 86.0	1
6	1023486	(000000-002999)	Hose, Hyd, Tc08, Jf08e90/Jf08str, 034.0	1
7	1041385	(000000-002999)	Hose, Hyd, Med04, Jf04str/Jf04str, 37.0	1
8	381857	(000000-002999)	Hose, Hyd, Tc08, Jf08e90/Jf08str, 018.0	1
9	381865	(000000-002999)	Hose, Hyd, Tc04, Jf04str/Jf04str, 018.0	1
10	1025990	(000000-002999)	Hose, Hyd, Tc04, Jf04str/Jf04str, 039.0	1
11	21119	(000000-002999)	Hose, Hyd, Tc04, Jf04e90/Jf04str, 092.0	2
12	1041392	(000000-002099)	Hose, Hyd, Tc06, Jf06e90/Jf06str, 50.0	1
13	77473	(000000-002999)	Hose, Hyd, Suc20, Jf20e45/Jf20str, 022.5	1
14	87672	(000000-002999)	Hose, Hyd, Med04, Jf04e45/Jf04str, 038.0	1
15	1033670	(000000-002999)	Hose, Hyd,Med, Jf16str/Jf16e90, 16.0	1
16	1046121	(000000-002099)	Hose, Hyd, Med16, Jf16e90/Jf16str, 19.0	1
17	1036185	(000000-002999)	Hose, Hyd, Tc08, Jf08str/Jf08str, 37.0	2
18	9008697	(000000-002687)	Hose Kit, Rear Drive, Replmt	1
19	1065453	(002688-002999)	Hose, Hyd, Spcl, Ff10e45/Ff10str, 56.0	1
20	1039586	(000000-002999)	Hose, Hyd, Med10, Jf10e90/Jf10str, 27.0	1
21	1036193	(000000-002099)	Hose, Med04, Jf04e45/Jf04str, 86.0	1
22	1036194	(000000-002999)	Hose, Hyd, Suc12, Jf12str/Jf12str, 27.0	1
23	9000351	(000000-002999)	Hose, Hyd, Tc06, Jf06e90/Jf06str, 028.0	1
24	396234	(000000-002999)	Hose, Hyd, Tc06, Jf06e90/Jf06str, 062.0	1
25	1037162	(000000-002999)	Hose, Hyd, Tc06, Jf06e90/Jf06str, 54.0	1
26	1036906	(000000-002999)	Hose, Hyd, Tc06, Jf06str/Jf06e90, 080.0	1
27	365009	(001313-002999)	Hose, Hyd, Tc08, Jf08str/Jf08str, 040.0	1
28	1033670	(002100-002999)	Hose, Hyd, Med16, Jf16e90/Jf16str, 016.0	1
29	377235	(002100-002999)	Hose, Hyd, Tc06, Jf06str/Jf06str, 048.0	1
30	65206	(002100-002999)	Hose, Hyd, Med04, Jf04e45/Jf04str, 078.0	1
31	1065452	(002688-002999)	Hose, Hyd, Spcl, Ff10str/Ff10str, 046.0	1

Fig. 61 - Hydraulic Hose Group, S30 (003000-)

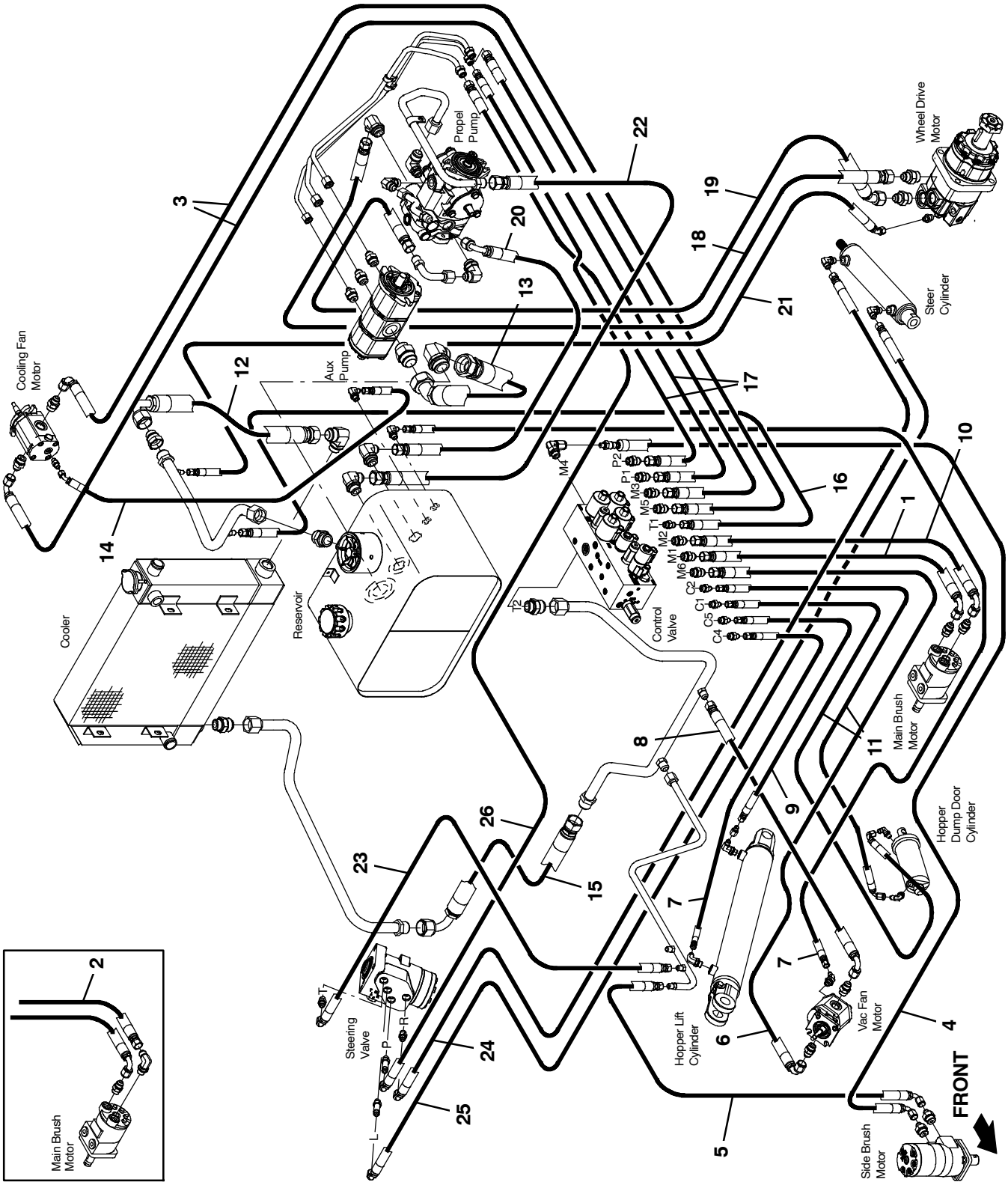

354737

Fig. 61 - Hydraulic Hose Group, S30 (003000-)

Ref.	Part No.	Serial Number	Description	Qty.
1	1067109	(003000-)	Hose, Hyd, Tc08, Ff08e90/Ff08str, 042.0	1
2	1067112	(003000-03440)	Hose, Hyd, Tc08, Ff08str/Ff08str, 040.0	1
3	1067110	(003000-)	Hose, Hyd, Tc08, Ff08e90/Ff08str, 052.0	2
4	1067105	(003000-005699)	Hose, Hyd, Tc06, Ff06e90/Ff06str, 134.0	1
4	9011154	(005700-)	Hose Kit, Hyd, Replmt [S30]	1
5	1067104	(003000-)	Hose, Hyd, Tc06, Ff06e90/Ff06str, 086.0	1
6	1067108	(003000-)	Hose, Hyd, Tc08, Ff08e90/Ff08str, 034.0	1
7	1067090	(003000-)	Hose, Hyd, Tc04, Ff04str/Ff04str, 037.0	2
8	1067107	(003000-)	Hose, Hyd, Tc08, Ff08e90/Ff08str, 018.0	1
9	1067089	(003000-)	Hose, Hyd, Tc04, Ff04str/Ff04str, 018.0	1
10	1067109	(003441-)	Hose, Hyd, Tc08, Ff08e90/Ff08str, 042.0	1
11	1067087	(003000-)	Hose, Hyd, Tc04, Ff04e90/Ff04str, 092.0	2
12	1067115	(003000-005699)	Hose, Hyd, Tc16, Ff16e90/Ff16str, 016.0	1
12	1072633	(005700-)	Hose, Hyd, Tc12, Ff12e90/Ff12str, 014.0	1
13	1067300	(003000-)	Hose, Hyd, Suc20, Ff20e45/Ff20str, 022.5	1
14	1067083	(003000-)	Hose, Hyd, Tc04, Ff04e45/Ff04str, 038.0	1
15	1067115	(003000-)	Hose, Hyd, Tc16, Ff16e90/Ff16str, 016.0	1
16	1067106	(003000-)	Hose, Hyd, Tc06, Ff06str/Ff06str, 048.0	1
17	1072531	(003000-)	Hose, Hyd, Tc08, Ff08str/Ff08str, 041.0	2
18	1065452	(003000-)	Hose, Hyd, Spcl, Ff10str/Ff10str, 046.0	1
19	1065453	(003000-)	Hose, Hyd, Spcl, Ff10e45/Ff10str, 056.0	1
20	1067113	(003000-)	Hose, Hyd, Tc10, Ff10e90/Ff10str, 027.0	1
21	1067084	(003000-)	Hose, Hyd, Tc04, Ff04e45/Ff04str, 078.0	1
22	1067299	(003000-)	Hose, Hyd, Suc12, Ff12str/Ff12str, 025.0	1
23	1067097	(003000-)	Hose, Hyd, Tc06, Ff06e90/Ff06str, 028.0	1
24	1067101	(003000-)	Hose, Hyd, Tc06, Ff06e90/Ff06str, 062.0	1
25	1067099	(003000-)	Hose, Hyd, Tc06, Ff06e90/Ff06str, 054.0	1
26	1067102	(003000-)	Hose, Hyd, Tc06, Ff06e90/Ff06str, 080.0	1

Fig. 62 - Hydraulic Hose Group, S30 XP (000000-002999)

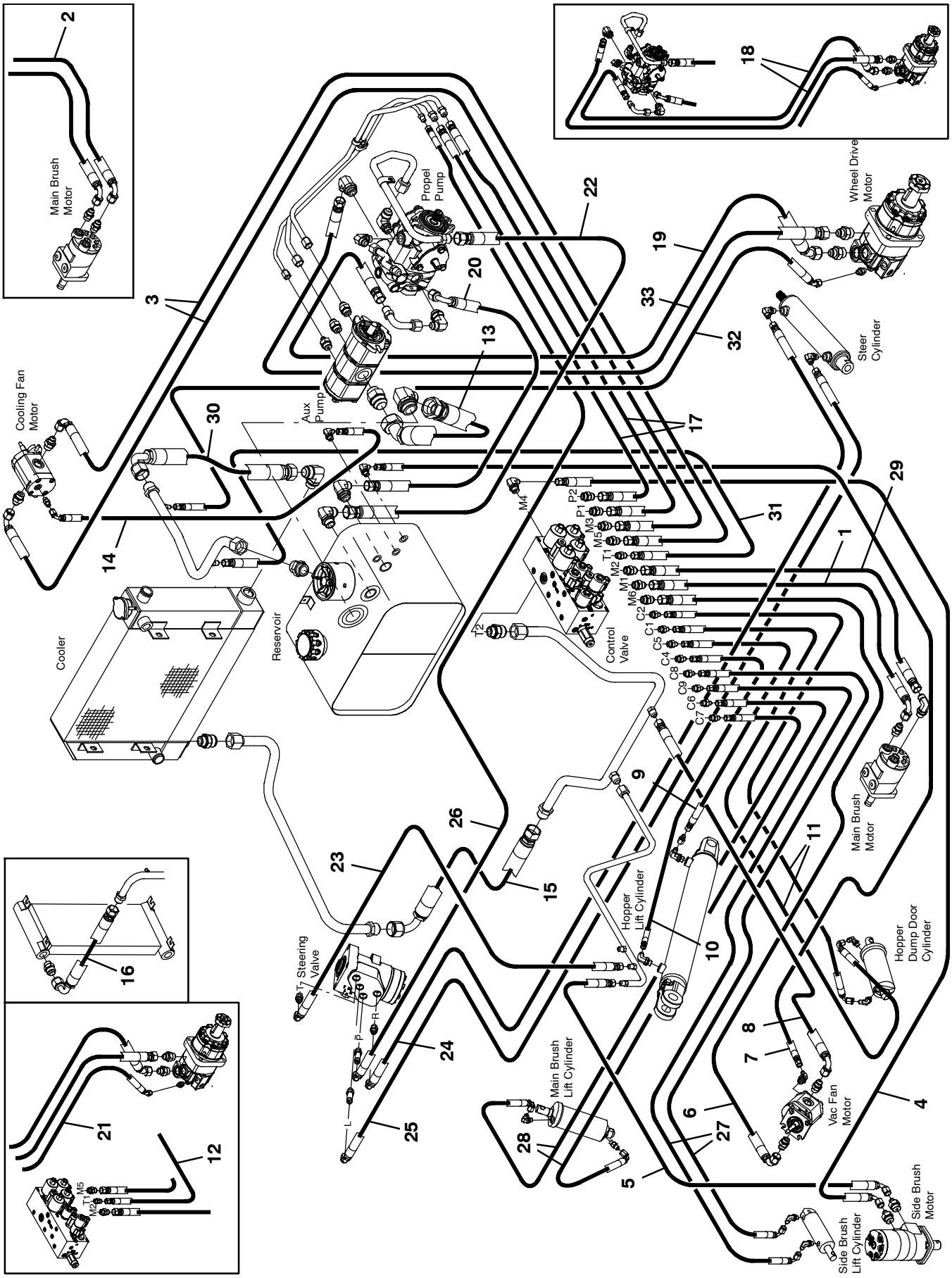

354748

Fig. 62 - Hydraulic Hose Group, S30 XP (000000-002999)

Ref.	Part No.	Serial Number	Description	Qty.
1	1039753	(000000-002999)	Hose, Hyd, Tc08, Jf08str/Jf08e90, 42.0	1
2	1041383	(000000-001312)	Hose, Hyd, Tc08, Jf08e90/Jf08str, 40.0	1
3	1041386	(000000-002999)	Hose, Hyd, Tc08, Jf08e90/Jf08str, 52.0	2
4	396213	(000000-002999)	Hose, Hyd, Tc06, Jf06e90/Jf06str, 134.0	1
5	1041941	(000000-002999)	Hose, Hyd, Tc06, Jf06e90/Jf06str, 86.0	1
6	1023486	(000000-002999)	Hose, Hyd, Tc08, Jf08e90/Jf08str, 034.0	1
7	1041385	(000000-002999)	Hose, Hyd, Med04, Jf04str/Jf04str, 37.0	1
8	381857	(000000-002999)	Hose, Hyd, Tc08, Jf08e90/Jf08str, 018.0	1
9	381865	(000000-002999)	Hose, Hyd, Tc04, Jf04str/Jf04str, 018.0	1
10	1025990	(000000-002999)	Hose, Hyd, Tc04, Jf04str/Jf04str, 039.0	1
11	21119	(000000-002999)	Hose, Hyd, Tc04, Jf04e90/Jf04str, 092.0	2
12	1041392	(000000-002099)	Hose, Hyd, Tc06, Jf06e90/Jf06str, 50.0	1
13	77473	(000000-002999)	Hose, Hyd, Suc20, Jf20e45/Jf20str, 022.5	1
14	87672	(000000-002999)	Hose, Hyd, Med04, Jf04e45/Jf04str, 038.0	1
15	1033670	(000000-002999)	Hose, Hyd,Med, Jf16str/Jf16e90, 16.0	1
16	1046121	(000000-002099)	Hose, Hyd, Med16, Jf16e90/Jf16str, 19.0	1
17	1036185	(000000-002999)	Hose, Hyd, Tc08, Jf08str/Jf08str, 37.0	2
18	9008697	(000000-002687)	Hose Kit, Rear Drive, Replmt	1
19	1065453	(002688-002999)	Hose, Hyd, Spcl, Ff10e45/Ff10str, 56.0	1
20	1039586	(000000-002999)	Hose, Hyd, Med10, Jf10e90/Jf10str, 27.0	1
21	1036193	(000000-002099)	Hose, Med04, Jf04e45/Jf04str, 86.0	1
22	1036194	(000000-002999)	Hose, Hyd, Suc12, Jf12str/Jf12str, 27.0	1
23	9000351	(000000-002999)	Hose, Hyd, Tc06, Jf06e90/Jf06str, 028.0	1
24	396234	(000000-002999)	Hose, Hyd, Tc06, Jf06e90/Jf06str, 062.0	1
25	1037162	(000000-002999)	Hose, Hyd, Tc06, Jf06e90/Jf06str, 54.0	1
26	1036906	(000000-002999)	Hose, Hyd, Tc06, Jf06str/Jf06e90, 080.0	1
27	1036201	(000000-002999)	Hose, Hyd, Tc04, Jf04e90/Jf04str, 126.0	2
28	1029061	(000000-002999)	Hose, Hyd, Tc04, Jf04e90/Jf04str, 042.0	2
29	365009	(001313-002999)	Hose, Hyd, Tc08, Jf08str/Jf08str, 040.0	1
30	1033670	(002100-002999)	Hose, Hyd, Med16, Jf16e90/Jf16str, 016.0	1
31	377235	(002100-002999)	Hose, Hyd, Tc06, Jf06str/Jf06str, 048.0	1
32	65206	(002100-002999)	Hose, Hyd, Med04, Jf04e45/Jf04str, 078.0	1
33	1065452	(002688-002999)	Hose, Hyd, Spcl, Ff10str/Ff10str, 046.0	1

Fig. 63 - Hydraulic Hose Group, S30 XP (003000-)

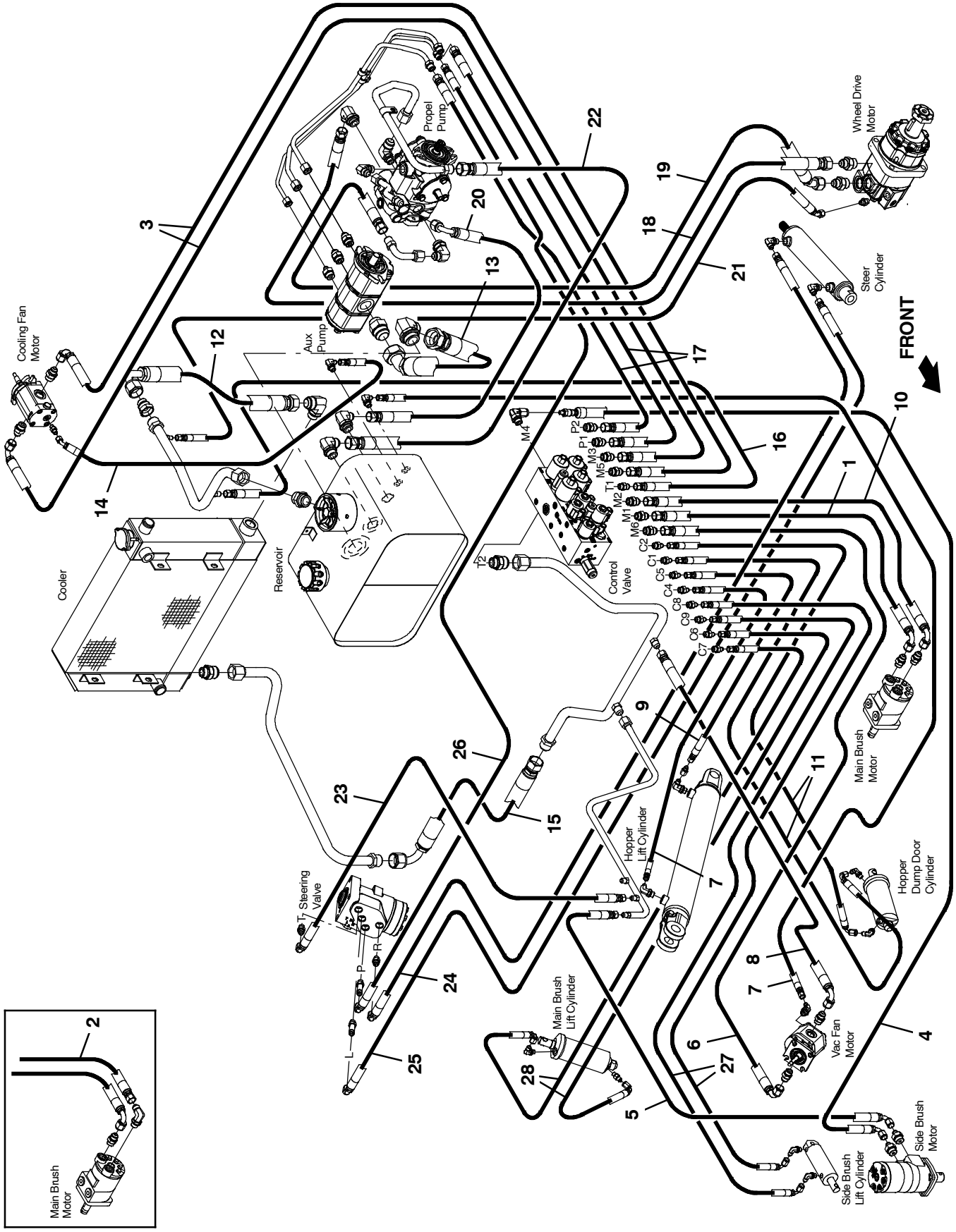

354748

Fig. 63 - Hydraulic Hose Group, S30 XP (003000-)

Ref.	Part No.	Serial Number	Description	Qty.
1	1067109	(003000-)	Hose, Hyd, Tc08, Ff08e90/Ff08str, 042.0	1
2	1067112	(003000-003440)	Hose, Hyd, Tc08, Ff08str/Ff08str, 040.0	1
3	1067110	(003000-)	Hose, Hyd, Tc08, Ff08e90/Ff08str, 052.0	2
4	1067105	(003000-005699)	Hose, Hyd, Tc06, Ff06e90/Ff06str, 134.0	1
4	9011154	(005700-)	Hose Kit, Hyd, Replmt [S30]	1
5	1067104	(003000-)	Hose, Hyd, Tc06, Ff06e90/Ff06str, 086.0	1
6	1067108	(003000-)	Hose, Hyd, Tc08, Ff08e90/Ff08str, 034.0	1
7	1067090	(003000-)	Hose, Hyd, Tc04, Ff04str/Ff04str, 037.0	2
8	1067107	(003000-)	Hose, Hyd, Tc08, Ff08e90/Ff08str, 018.0	1
9	1067089	(003000-)	Hose, Hyd, Tc04, Ff04str/Ff04str, 018.0	1
10	1067109	(003441-)	Hose, Hyd, Tc08, Ff08e90/Ff08str, 042.0	1
11	1067087	(003000-)	Hose, Hyd, Tc04, Ff04e90/Ff04str, 092.0	2
12	1067115	(003000-005699)	Hose, Hyd, Tc16, Ff16e90/Ff16str, 016.0	1
12	1072633	(005700-)	Hose, Hyd, Tc12, Ff12e90/Ff12str, 014.0	1
13	1067300	(003000-)	Hose, Hyd, Suc20, Ff20e45/Ff20str, 022.5	1
14	1067083	(003000-)	Hose, Hyd, Tc04, Ff04e45/Ff04str, 038.0	1
15	1067115	(003000-)	Hose, Hyd, Tc16, Ff16e90/Ff16str, 016.0	1
16	1067106	(003000-)	Hose, Hyd, Tc06, Ff06str/Ff06str, 048.0	1
17	1072531	(003000-)	Hose, Hyd, Tc08, Ff08str/Ff08str, 041.0	2
18	1065452	(003000-)	Hose, Hyd, Spcl, Ff10str/Ff10str, 046.0	1
19	1065453	(003000-)	Hose, Hyd, Spcl, Ff10e45/Ff10str, 056.0	1
20	1067113	(003000-)	Hose, Hyd, Tc10, Ff10e90/Ff10str, 027.0	1
21	1067084	(003000-)	Hose, Hyd, Tc04, Ff04e45/Ff04str, 078.0	1
22	1067299	(003000-)	Hose, Hyd, Suc12, Ff12str/Ff12str, 025.0	1
23	1067097	(003000-)	Hose, Hyd, Tc06, Ff06e90/Ff06str, 028.0	1
24	1067101	(003000-)	Hose, Hyd, Tc06, Ff06e90/Ff06str, 062.0	1
25	1067099	(003000-)	Hose, Hyd, Tc06, Ff06e90/Ff06str, 054.0	1
26	1067102	(003000-)	Hose, Hyd, Tc06, Ff06e90/Ff06str, 080.0	1
27	1067088	(003000-)	Hose, Hyd, Tc04, Ff04e90/Ff04str, 126.0	2
28	1067086	(003000-)	Hose, Hyd, Tc04, Ff04e90/Ff04str, 042.0	2

Fig. 64 - Hydraulic Hose Group, S30 X4 (000000-002999)

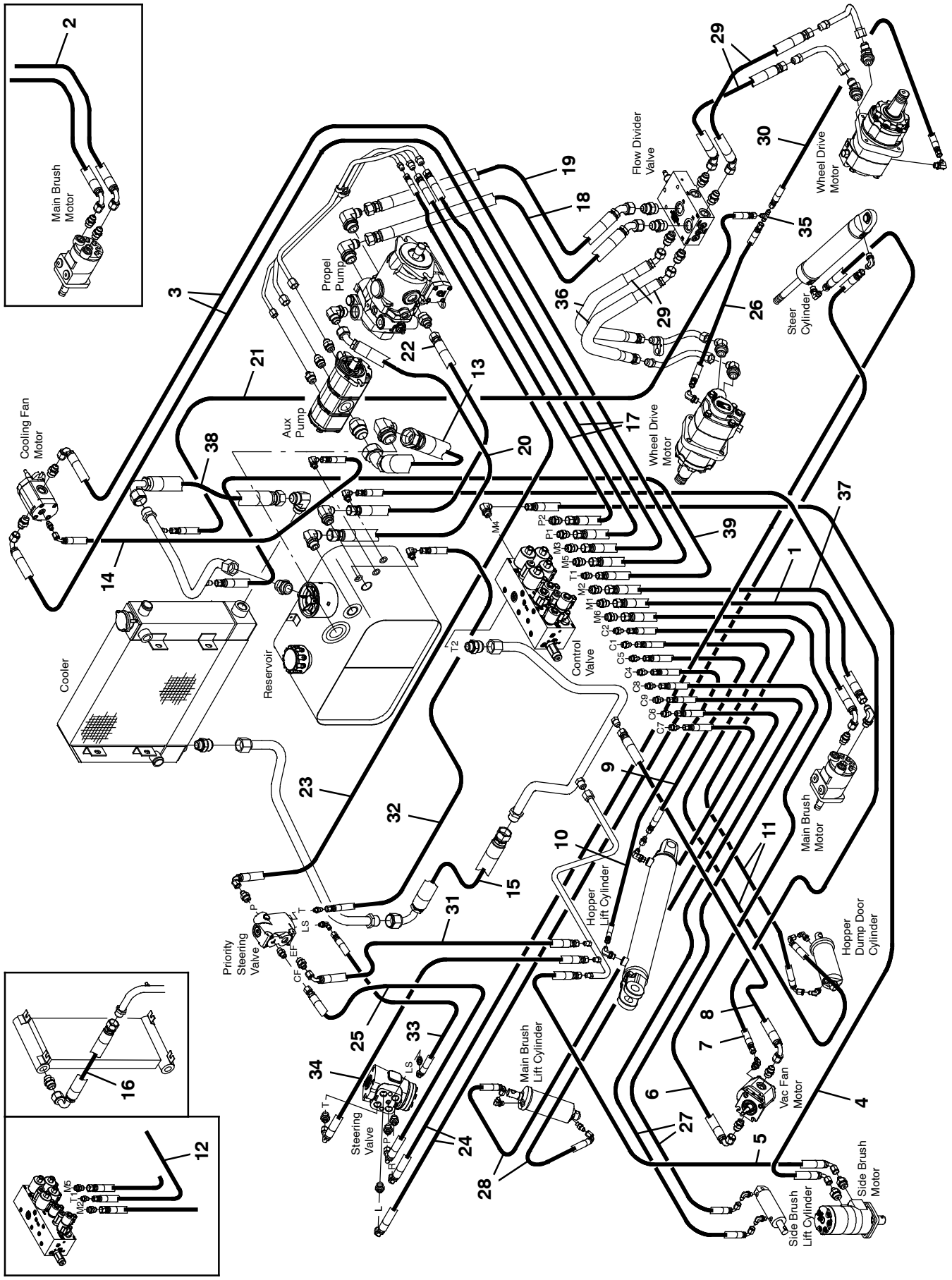

354783

Fig. 64 - Hydraulic Hose Group, S30 X4 (000000-002999)

Ref.	Part No.	Serial Number	Description	Qty.
1	1039753	(000000-002999)	Hose, Hyd, Tc08, Jf08str/Jf08e90, 42.0	1
2	1041383	(000000-001312)	Hose, Hyd, Tc08, Jf08e90/Jf08str, 40.0	1
3	1041386	(000000-002999)	Hose, Hyd, Tc08, Jf08e90/Jf08str, 52.0	2
4	396213	(000000-002999)	Hose, Hyd, Tc06, Jf06e90/Jf06str, 134.0	1
5	1041941	(000000-002999)	Hose, Hyd, Tc06, Jf06e90/Jf06str, 86.0	1
6	1023486	(000000-002999)	Hose, Hyd, Tc08, Jf08e90/Jf08str, 034.0	1
7	1041385	(000000-002999)	Hose, Hyd, Med04, Jf04str/Jf04str, 37.0	1
8	381857	(000000-002999)	Hose, Hyd, Tc08, Jf08e90/Jf08str, 018.0	1
9	381865	(000000-002999)	Hose, Hyd, Tc04, Jf04str/Jf04str, 018.0	1
10	1025990	(000000-002999)	Hose, Hyd, Tc04, Jf04str/Jf04str, 039.0	1
11	21119	(000000-002999)	Hose, Hyd, Tc04, Jf04e90/Jf04str, 092.0	2
12	1041392	(000000-002099)	Hose, Hyd, Tc06, Jf06e90/Jf06str, 50.0	1
13	9000227	(000000-002999)	Hose, Hyd, Suc20, Jf20e45/Jf20str, 025.0	1
14	87672	(000000-002999)	Hose, Hyd, Med04, Jf04e45/Jf04str, 038.0	1
15	1033670	(000000-002999)	Hose, Hyd,Med, Jf16str/Jf16e90, 16.0	1
16	1046121	(000000-002099)	Hose, Hyd, Med16, Jf16e90/Jf16str, 019.0	1
17	1036185	(000000-002999)	Hose, Hyd, Tc08, Jf08str/Jf08str, 37.0	2
18	1036210	(000000-002999)	Hose, Hyd, Spcl, Jf12e45/Jf12str, 028.0	1
19	1036211	(000000-002999)	Hose, Hyd, Spcl, Jf12e45/Jf12str, 025.0	1
20	1036188	(000000-002999)	Hose, Hyd, Suc12, Jf12e45/Jf12str, 32.0	1
21	77308	(000000-002999)	Hose, Hyd, Med04, Jf04str/Jf04str, 042.0	1
22	1036202	(000000-002999)	Hose, Hyd, Med10, Jf10str/Jf10str, 024.0	1
23	1036197	(000000-002999)	Hose, Hyd, Tc06, Jf06e90/Jf06str, 58.0	1
24	1036206	(000000-002999)	Hose, Hyd, Tc06, Jf06e90/Jf06str, 84.0	2
25	1036207	(000000-002999)	Hose, Hyd, Tc06, Jf06e90/Jf06str, 026.0	1
26	31568	(000000-001628)	Hose, Hyd, Med04, Jf04str/Jf04str, 046.0	1
26	367113	(001629-002999)	Hose, Hyd, Med04, Jf04str/Jf04str, 051.0	1
27	1036201	(000000-002999)	Hose, Hyd, Tc04, Jf04e90/Jf04str, 126.0	2
28	1029061	(000000-002999)	Hose, Hyd, Tc04, Jf04e90/Jf04str, 042.0	2
29	1032950	(000000-002999)	Hose, Hyd, Spcl, Jf10e45/Jf10str, 029.0	4
30	77308	(000000-002999)	Hose, Hyd, Med04, Jf04str/Jf04str, 42.0	1
31	1036195	(000000-002999)	Hose, Hyd, Tc06, Jf06e90/Jf06str, 20.0	1
32	77306	(000000-002999)	Hose, Hyd, Med04, Jf04str/Jf04str, 052.0	1
33	1036208	(000000-002999)	Hose, Hyd, Tc04, Jf04e90/Jf04str, 21.0	1
34	1036209	(000000-002999)	Hose, Hyd, Tc06, Jf06e90/Jf06str, 030.0	1
35	34392	(000000-002999)	Fitting, Hyd, Tee, Jm04/Jm04/Jm04,Bh Br	1
36	1042004	(000000-002999)	Hose, Sleeve, Fire	2
37	365009	(001313-002999)	Hose, Hyd, Tc08, Jf08str/Jf08str, 040.0	1
38	1033670	(002100-002999)	Hose, Hyd, Med16, Jf16e90/Jf16str, 016.0	1
39	377235	(002100-002999)	Hose, Hyd, Tc06, Jf06str/Jf06str, 048.0	1

Fig. 65 - Hydraulic Hose Group, S30 X4 (003000-)

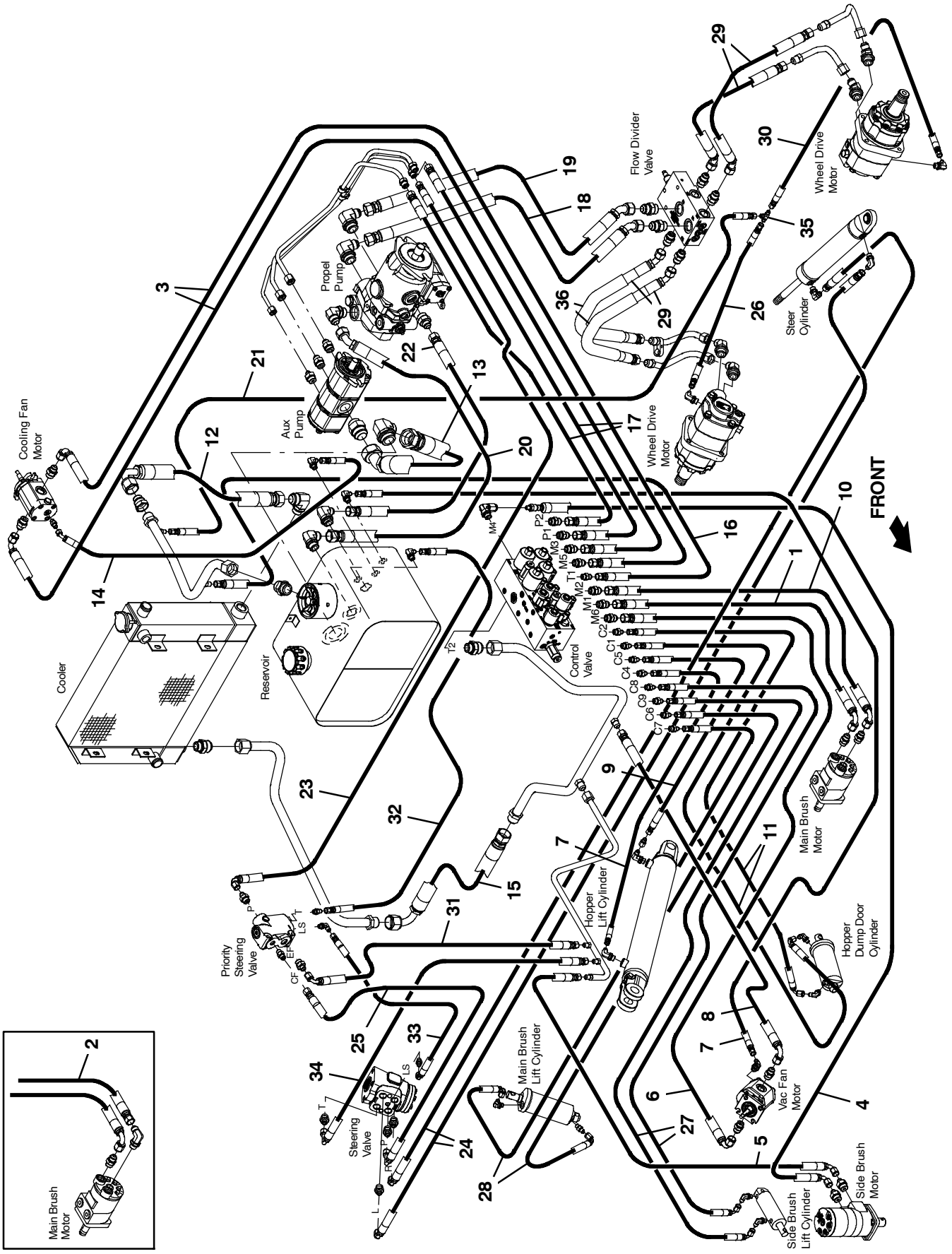

354783 - D

Fig. 65 - Hydraulic Hose Group, S30 X4 (003000-)

Ref.	Part No.	Serial Number	Description	Qty.
1	1067109	(003000-)	Hose, Hyd, Tc08, Ff08e90/Ff08str, 042.0	1
2	1067112	(003000-003440)	Hose, Hyd, Tc08, Ff08str/Ff08str, 040.0	1
3	1067110	(003000-)	Hose, Hyd, Tc08, Ff08e90/Ff08str, 052.0	2
4	1067105	(003000-005699)	Hose, Hyd, Tc06, Ff06e90/Ff06str, 134.0	1
4	9011154	(005700-)	Hose Kit, Hyd, Replmt [S30]	1
5	1067104	(003000-)	Hose, Hyd, Tc06, Ff06e90/Ff06str, 086.0	1
6	1067108	(003000-)	Hose, Hyd, Tc08, Ff08e90/Ff08str, 034.0	1
7	1067090	(003000-)	Hose, Hyd, Tc04, Ff04str/Ff04str, 037.0	2
8	1067107	(003000-)	Hose, Hyd, Tc08, Ff08e90/Ff08str, 018.0	1
9	1067089	(003000-)	Hose, Hyd, Tc04, Ff04str/Ff04str, 018.0	1
10	1067109	(003441-)	Hose, Hyd, Tc08, Ff08e90/Ff08str, 042.0	1
11	1067087	(003000-)	Hose, Hyd, Tc04, Ff04e90/Ff04str, 092.0	2
12	1067115	(003000-005699)	Hose, Hyd, Tc16, Ff16e90/Ff16str, 016.0	1
12	1072633	(005700-)	Hose, Hyd, Tc12, Ff12e90/Ff12str, 014.0	1
13	1067301	(003000-)	Hose, Hyd, Suc20, Ff20e45/Ff20str, 025.0	1
14	1067083	(003000-)	Hose, Hyd, Tc04, Ff04e45/Ff04str, 038.0	1
15	1067115	(003000-)	Hose, Hyd, Tc16, Ff16e90/Ff16str, 016.0	1
16	1067106	(003000-)	Hose, Hyd, Tc06, Ff06str/Ff06str, 048.0	1
17	1072531	(003000-)	Hose, Hyd, Tc08, Ff08str/Ff08str, 041.0	2
18	1067154	(003000-)	Hose, Hyd, Spcl, Ff12e45/Ff12str, 028.0	1
19	1067153	(003000-)	Hose, Hyd, Spcl, Ff12e45/Ff12str, 025.0	1
20	1067298	(003000-)	Hose, Hyd, Suc12, Ff12e45/Ff12str, 32.0	1
21	1067092	(003000-)	Hose, Hyd, Med04, Ff04str/Ff04str, 042.0	1
22	1067114	(003000-)	Hose, Hyd, Med10, Ff10str/Ff10str, 024.0	1
23	1067100	(003000-)	Hose, Hyd, Tc06, Ff06e90/Ff06str, 58.0	1
24	1067103	(003000-)	Hose, Hyd, Tc06, Ff06e90/Ff06str, 84.0	2
25	1067096	(003000-)	Hose, Hyd, Tc06, Ff06e90/Ff06str, 026.0	1
26	1067093	(003000-)	Hose, Hyd, Med04, Ff04str/Ff04str, 051.0	1
27	1067088	(003000-)	Hose, Hyd, Tc04, Ff04e90/Ff04str, 126.0	2
28	1067086	(003000-)	Hose, Hyd, Tc04, Ff04e90/Ff04str, 042.0	2
29	1032950	(003000-)	Hose, Hyd, Spcl, Jf10e45/Jf10str, 029.0	4
30	1067092	(003000-)	Hose, Hyd, Med04, Ff04str/Ff04str, 42.0	1
31	1067095	(003000-)	Hose, Hyd, Tc06, Ff06e90/Ff06str, 20.0	1
32	1067094	(003000-)	Hose, Hyd, Med04, Ff04str/Ff04str, 052.0	1
33	1067085	(003000-)	Hose, Hyd, Tc04, Ff04e90/Ff04str, 21.0	1
34	1067098	(003000-)	Hose, Hyd, Tc06, Ff06e90/Ff06str, 030.0	1
35	1067058	(003000-)	Fitting, Hyd, Tee, Fm04/Fm04/Fm04,Bh Br	1
36	1042004	(003000-)	Hose, Sleeve, Fire	2

Fig. 66 - Hydraulic Reservoir Group

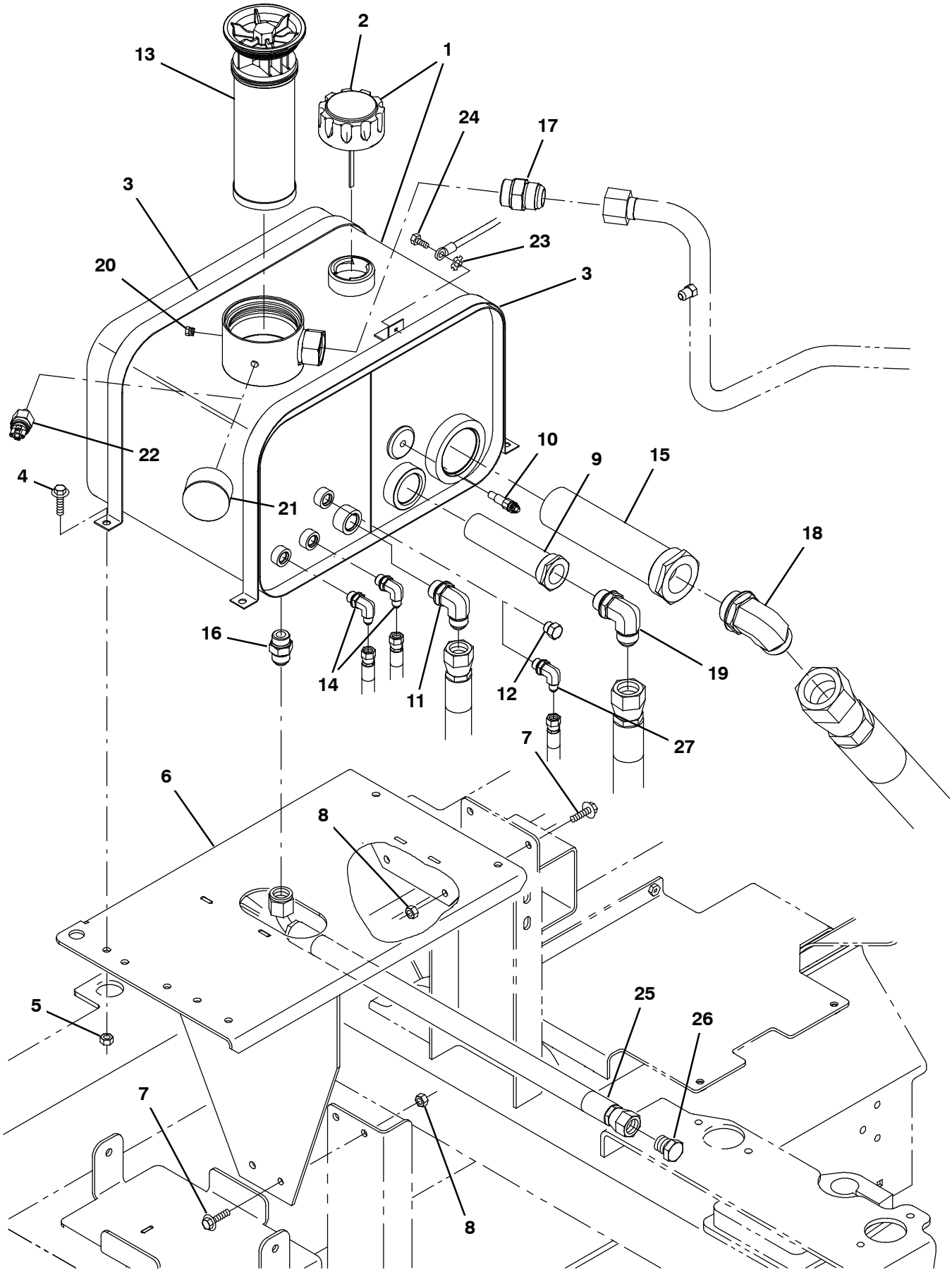

354782

Fig. 66 - Hydraulic Reservoir Group

	Ref.	Part No.	Serial Number	Description	Qty.
▽	1	9004518	(000000-)	Reservoir, Hyd, W/ Label, Replmt	1
▲	2	25122	(000000-)	Cap, Breather, Hyd, 2.4 Ds	1
▲	2	1018289	(000000-)	Cap, Breather, Hyd (CE Only)	1
	3	1032915	(000000-)	Strap, Tank, Hyd	2
	4	1037354	(000000-)	Screw, Hex, M8 X 1.25 X 30, 9.8, Sems	2
	5	08709	(000000-)	Nut, Hex, Lock, M8 X 1.25, Nl	4
	6	1045125	(000000-)	Bracket Wldt, Reservoir, Hyd	1
	7	1037346	(000000-)	Screw, Hex, M8 X 1.25 X 25, 9.8, Sems	4
	8	07791	(000000-)	Nut, Hex, Flng, M8 X 1.25	4
	9	361023	(000000-)	Strainer, Hyd, 010gpm 100mesh	1
	10	58592	(000000-)	Send-Unit, Water, Temp,04npt[113oh/195d]	1
	11	53076	(000000-002999)	Fitting, Hyd, E90, Jm10/Om12	1
	11	762469	(003000-)	Fitting, Hyd, E90, Fm10/Om12	1
	12	46482	(000000-)	Fitting, Hyd, Plug, Om06 (S30 and XP Only)	1
	13	1021579	(000000-)	Filter Assy, Hyd, 10mic	1
	14	47638	(000000-002999)	Fitting, Hyd, E90, Jm04/Om06	2
	14	762425	(003000-)	Fitting, Hyd, E90, Fm04/Om06	2
	15	31613	(000000-)	Strainer, Hyd, 025gpm 100mesh 03psi	1
	16	46480	(000000-002999)	Fitting, Hyd, Str, Jm10/Om10	1
	16	762463	(003000-)	Fitting, Hyd, Str, Fm10/Om10	1
	17	52929	(000000-002999)	Fitting, Hyd, Str, Jm16/Om16	1
	17	762481	(003000-)	Fitting, Hyd, Str, Fm16/Om16	1
	18	73109	(000000-002999)	Fitting, Hyd, E90, Jm20/Om20	1
	18	762484	(003000-)	Fitting, Hyd, E90, Fm20/Om20	1
	19	46481	(000000-002999)	Fitting, Hyd, E90, Jm12/Om12	1
	19	762492	(003000-)	Fitting, Hyd, E90, Fm12/Om12	1
	20	63511	(000000-)	Fitting, Hyd, Plug, Pm02	1
	21	1025132	(000000-)	Indicator, Press, 60psi (S30 Only)	1
	22	1025133	(000000-)	Switch, Press, Hyd, 18-24psi, Spst, No (S30 XP and X4 Only)	1
	23	32982	(000000-)	Washer, Lock, Int, 0.25	1
	24	222158	(000000-)	Screw, Hex, M6 X 1.00 X 10, Fmg	1
	25	1036199	(000000-002999)	Hose, Hyd, Tc10, Jf10e90/Jf10str, 42.0	1
	25	1067773	(003000-)	Hose, Hyd, Tc10, Ff10e90/Ff10str, 42.0	1
	26	1043066	(000000-002999)	Fitting, Hyd, Plug, Jm10	1
	26	762156	(003000-)	Fitting, Hyd, Plug, Fm10	1
	27	47638	(000000-002999)	Fitting, Hyd, E90, Jm04/Om06 (S30 X4 Only)	1
	27	762425	(003000-)	Fitting, Hyd, E90, Fm04/Om06 (S30 X4 Only)	1

Fig. 67 - Hydraulic Cooler and Tubes Group (000000-002099)

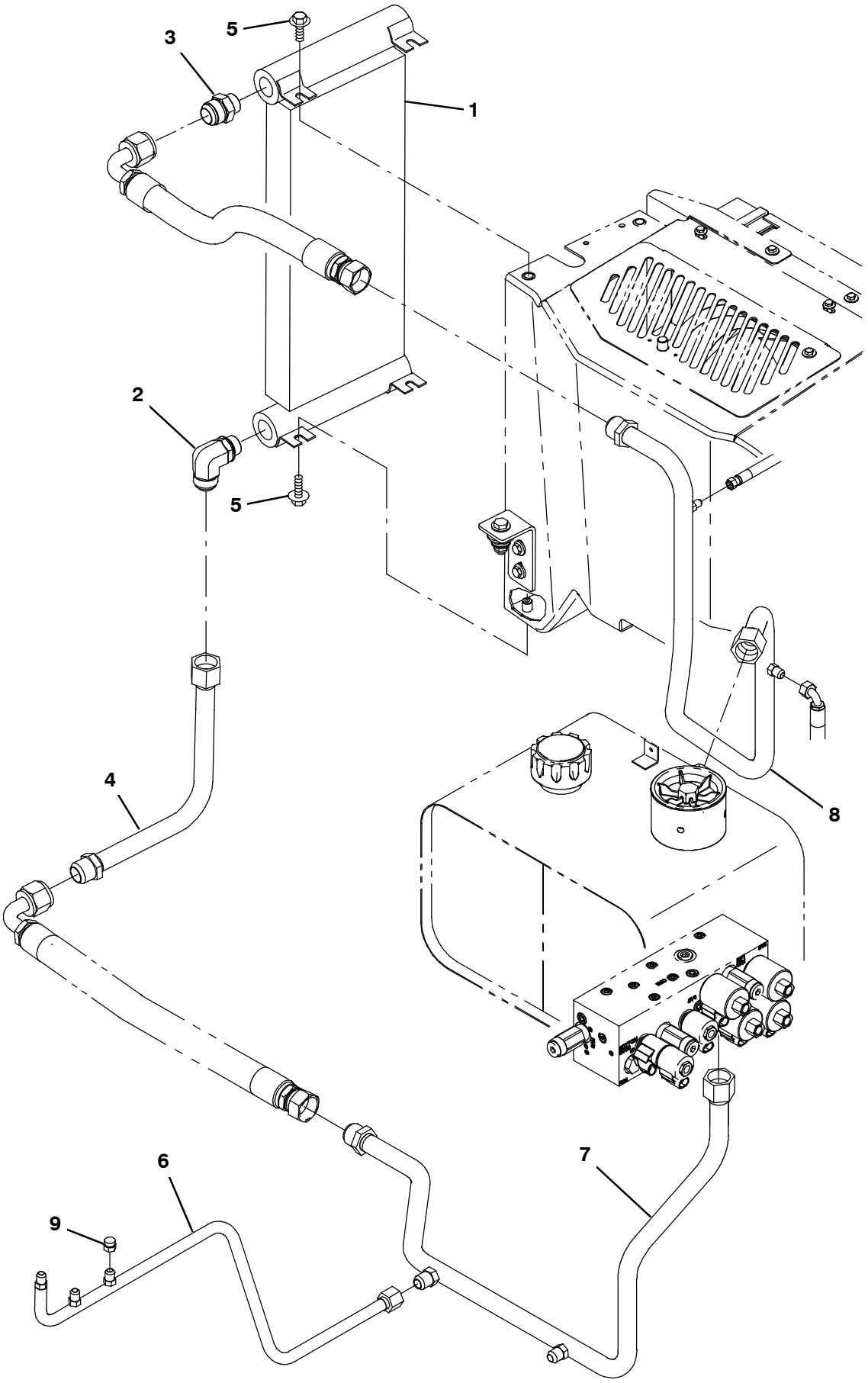

354714

Fig. 67 - Hydraulic Cooler and Tubes Group (000000-002099)

Ref.	Part No.	Serial Number	Description	Qty.
1	1028560	(000000-002099)	Cooler, Hyd, 18gpm 400btu Of12 20x8x2	1
2	52142	(000000-002099)	Fitting, Hyd, E90, Jm16/Om12	1
3	34357	(000000-002099)	Fitting, Hyd, Str, Jm16/Om12	1
4	1031051	(000000-002099)	Tube Assy, Hyd, Cooler [Coyote]	1
5	1037346	(000000-002099)	Screw, Hex, M8 X 1.25 X 25, 9.8, Sems	4
6	1033788	(000000-002099)	Tube, Hyd, Steering Drain	1
7	1030498	(000000-002099)	Tube Assy, Hyd, Valve Tank [Coyote]	1
8	1046109	(000000-002099)	Tube Assy, Hyd, Fltr [Coyote]	1
9	40625	(000000-002099)	Fitting, Hyd, Cap, Jf06	1

Fig. 68 - Hydraulic Cooler and Tubes Group (002100-)

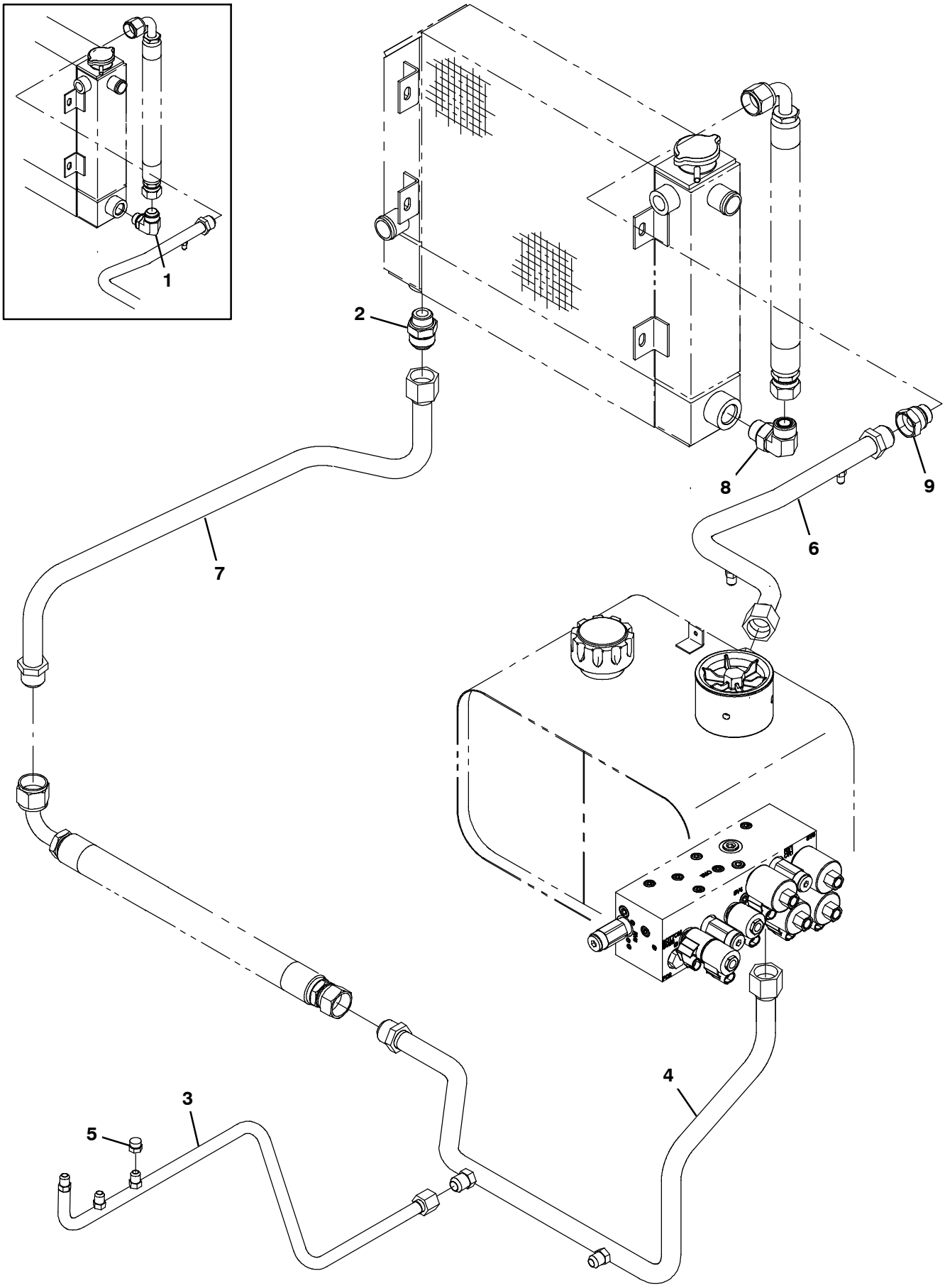

354714

Fig. 68 - Hydraulic Cooler and Tubes Group (002100-)

Ref.	Part No.	Serial Number	Description	Qty.
1	52142	(002100-002999)	Fitting, Hyd, E90, Jm16/Om12	1
1	1067054	(003000-005699)	Fitting, Hyd, E90, Fm16/Om12	1
2	34357	(002100-002999)	Fitting, Hyd, Str, Jm16/Om12	1
2	1068299	(003000-)	Fitting, Hyd, Str, Fm16/Om12	1
3	1033788	(002100-002999)	Tube, Hyd, Steering Drain	1
3	1067177	(003000-)	Tube, Hyd, Steering Drain	1
4	1030498	(002100-002999)	Tube Assy, Hyd, Valve Tank [Coyote]	1
4	1067187	(003000-)	Tube Assy, Hyd, Valve Tank [Coyote]	1
5	40625	(002100-)	Fitting, Hyd, Cap, Jf06	1
6	1054236	(002100-002999)	Tube Assy, Hyd, Fltr	1
6	1067185	(003000-)	Tube Assy, Hyd, Fltr	1
7	1054664	(002100-002999)	Tube Assy, Hyd, Cooler [Coyote]	1
7	1067186	(003000-)	Tube Assy, Hyd, Cooler [Coyote]	1
8	762492	(005700-)	Fitting, Hyd, E90, Fm12/Om12	1
9	1072632	(005700-)	Fitting, Hyd, Str, Ff16/Fm12	1

Fig. 69 - Hydraulic Pumps Group, S30 and XP

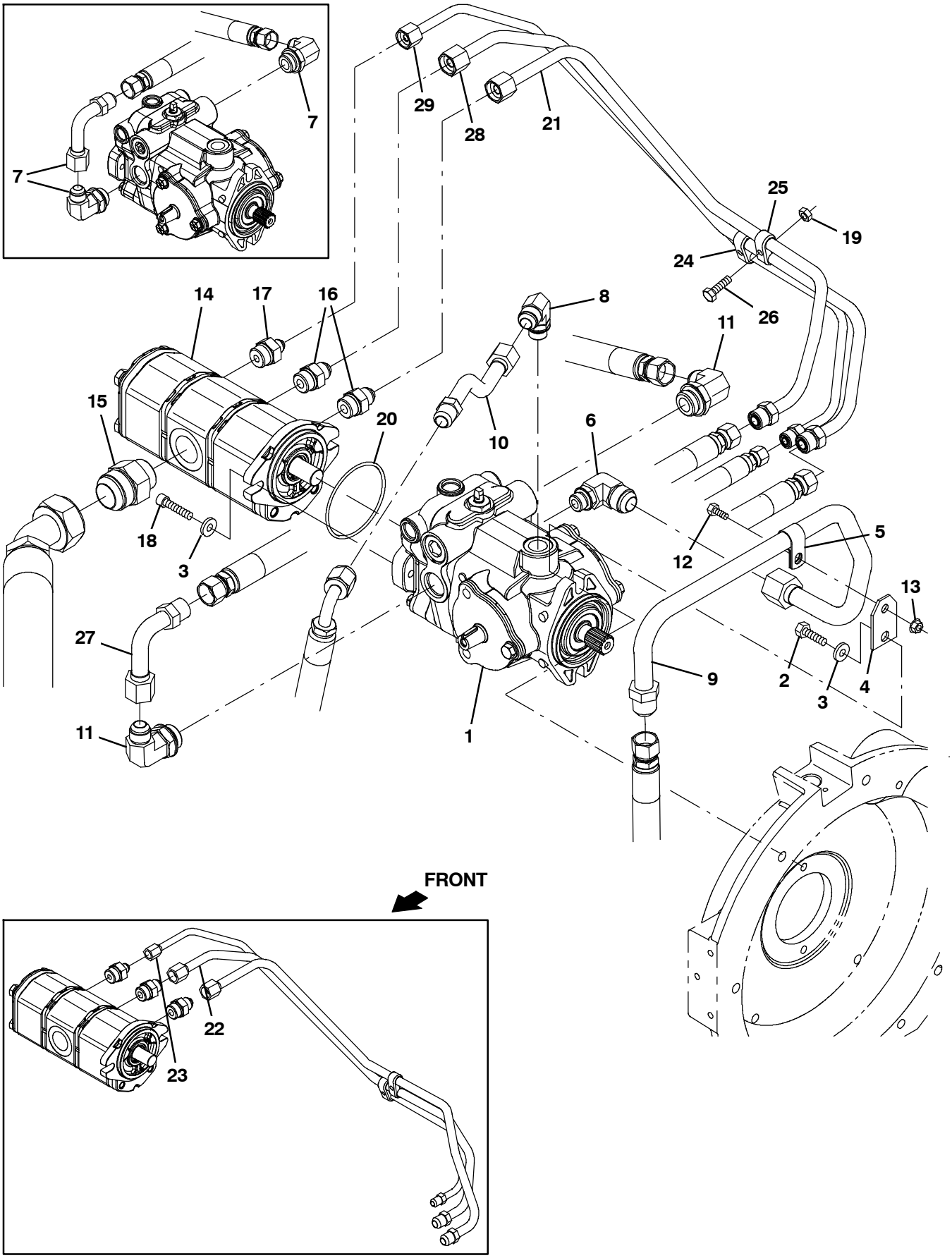

354720

Fig. 69 - Hydraulic Pumps Group, S30 and XP

	Ref.	Part No.	Serial Number	Description	Qty.
	1	1029254	(000000-001802)	Pump, Hyd, Piston, Var, 1.24 4500, Cw (See Breakdowns)	1
	1	1054905	(001803-)	Pump, Hyd, Piston, Var, 1.24 4500, Cw (See Breakdowns)	1
	2	21198	(000000-)	Screw, Hex, .38-16 X 1.25, G5	2
	3	32485	(000000-)	Washer, Flat, 0.38, Sae	4
	4	1039309	(000000-)	Bracket, Sppt, Hyd Tube	1
	5	07471	(000000-)	Clamp, Cable, Stl, 0.75d X 0.75w, 1hole	1
	6	1039483	(000000-002999)	Fitting, Hyd, E90, Jm12/0m08	1
	6	1067053	(003000-)	Fitting, Hyd, E90, Fm12/0m08	1
	7	9008697	(000000-002687)	Hose Kit, Rear Drive, Replmt	1
	8	56827	(000000-002999)	Fitting, Hyd, E90, Jm10/Om08	1
	8	762466	(003000-)	Fitting, Hyd, E90, Fm10/Om08	1
	9	1039210	(000000-002999)	Tube, Hyd [Pump Charge]	1
	9	1067181	(003000-)	Tube, Hyd [Pump Charge]	1
	10	1039340	(000000-002999)	Tube, Hyd, Pump, Drain	1
	10	1067182	(003000-)	Tube, Hyd, Pump, Drain	1
	11	762469	(002688-)	Fitting, Hyd, E90, Fm10/Om12	2
	12	16735	(000000-)	Screw, Hex, M8 X 1.25 X 16, 8.8	1
	13	07791	(000000-)	Nut, Hex, Flng, M8 X 1.25	1
▽	14	1030374	(000000-)	Pump, Hyd, Gear, Ext, 3, 00.70 2500, Cw	1
▲		373708	(000000-)	Pump, Info, Repair	1
▲		373707	(000000-)	Seal Kit	1
	15	67811	(000000-002999)	Fitting, Hyd, Str, Jm20/Om16	1
	15	1007953	(003000-)	Fitting, Hyd, Str, Fm20/Om16	1
	16	56692	(000000-002999)	Fitting, Hyd, Str, Jm08/Om10	2
	16	762456	(003000-)	Fitting, Hyd, Str, Fm08/Om10	2
	17	47508	(000000-002999)	Fitting, Hyd, Str, Jm06/Om10	1
	17	762439	(003000-)	Fitting, Hyd, Str, Fm06/Om10	1
	18	10832	(000000-)	Screw, Soc, .38-16 X 1.50, Al	2
	19	08708	(000000-)	Nut, Hex, Lock, M6 X 1.00, Nl	2
	20	65145-1	(000000-)	Seal, Org, .069 X 03.06id	1
	21	1033916	(000000-002999)	Tube, Hyd, Gear Pump Rear [Coyote]	1
	21	1067180	(003000-)	Tube, Hyd, Gear Pump Rear [Coyote]	1
	22	1033915	(000000-002999)	Tube, Hyd, Gear Pump Middle [Coyote]	1
	22	1067179	(003000-005699)	Tube, Hyd, Gear Pump Middle [Coyote]	1
	23	1033914	(000000-002999)	Tube, Hyd, Gear Pump Front [Coyote]	1
	23	1067178	(003000-005699)	Tube, Hyd, Gear Pump Front [Coyote]	1
	24	1043755	(000000-)	Clamp, Tube, 0.37d 0.50d, 2 Hole	1
	25	1043754	(000000-)	Clamp, Tube, 0.50d 0.50d, 2 Hole	1
	26	06944	(000000-)	Screw, Hex, M6 X 1.00 X 25, 8.8	2
	27	1065781	(002688-)	Tube, Hyd, Pump, Rear Drive, Ff10/Fm10	1
	28	1071716	(005700-)	Tube, Hyd, Gear Pump Middle[S30 Mit2013]	1
	29	1071717	(005700-)	Tube, Hyd, Gear Pump Front[S30 Mit2013]	1

Fig. 70 - Hydraulic Pumps Group, S30 X4

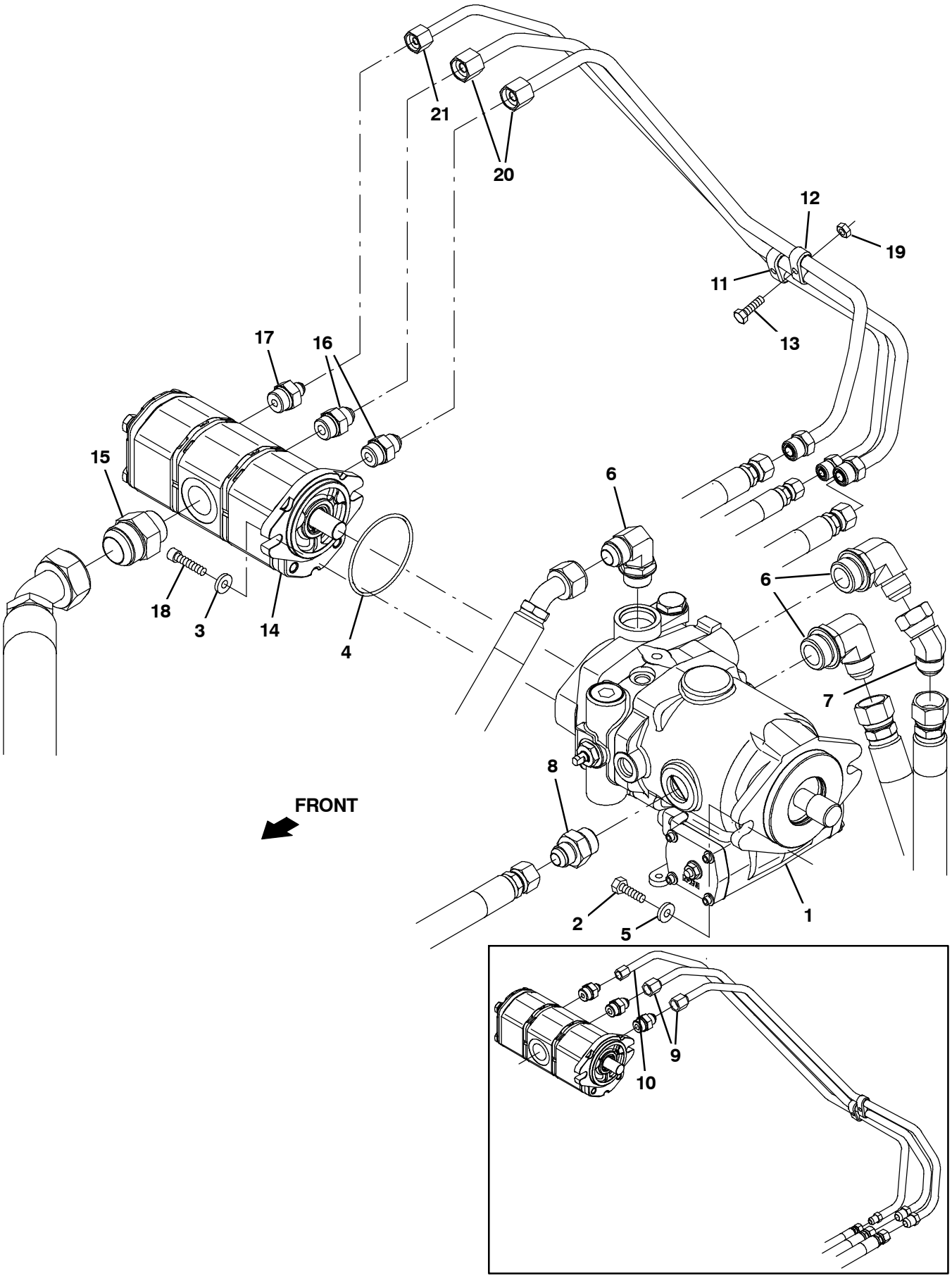

354772 - D

Fig. 69 - Hydraulic Pumps Group, S30 X4

	Ref.	Part No.	Serial Number	Description	Qty.
	1	1029255	(000000-)	Pump, Hyd, Piston, Var, 2.48 4500, Cw (See Breakdowns)	1
	2	06969	(000000-)	Screw, Hex, M12 X 1.75 X 40, 8.8	2
	3	32485	(000000-)	Washer, Flat, 0.38, Sae	2
	4	65145-1	(000000-)	Seal, Org, .069 X 03.06id	1
	5	36328	(000000-)	Washer, Flat, Belleville, .50	2
	6	52911	(000000-002999)	Fitting, Hyd, E90, Jm12/Om16	3
	6	767407	(003000-)	Fitting, Hyd, E90, Fm12/Om16	3
	7	07934	(000000-002999)	Fitting, Hyd, E45, Jf12/Jm12	1
	7	1067057	(003000-)	Fitting, Hyd, E45, Ff12/Jm12	1
	8	42223	(000000-002999)	Fitting, Hyd, Str, Jm10/Om12	1
	8	762468	(003000-)	Fitting, Hyd, Str, Fm10/Om12	1
	9	1033915	(000000-002999)	Tube, Hyd, Gear Pump Middle [Coyote]	2
	9	1067179	(003000-005699)	Tube, Hyd, Gear Pump Middle [Coyote]	2
	10	1033914	(000000-002999)	Tube, Hyd, Gear Pump Front [Coyote]	1
	10	1067178	(003000-005699)	Tube, Hyd, Gear Pump Front [Coyote]	1
	11	1043755	(000000-)	Clamp, Tube, 0.37d 0.50d, 2 Hole	1
	12	1043754	(000000-)	Clamp, Tube, 0.50d 0.50d, 2 Hole	1
	13	06944	(000000-)	Screw, Hex, M6 X 1.00 X 25, 8.8	2
▽	14	1030374	(000000-)	Pump, Hyd, Gear, Ext, 3, 00.70 2500, Cw	1
▲		373708	(000000-)	Pump, Info, Repair	1
▲		373707	(000000-)	Seal Kit	1
	15	67811	(000000-002999)	Fitting, Hyd, Str, Jm20/Om16	1
	15	1007953	(003000-)	Fitting, Hyd, Str, Fm20/Om16	1
	16	56692	(000000-002999)	Fitting, Hyd, Str, Jm08/Om10	2
	16	762456	(003000-)	Fitting, Hyd, Str, Fm08/Om10	2
	17	47508	(000000-002999)	Fitting, Hyd, Str, Jm06/Om10	1
	17	762439	(003000-)	Fitting, Hyd, Str, Fm06/Om10	1
	18	10832	(000000-)	Screw, Soc, .38-16 X 1.50, Al	2
	19	08708	(000000-)	Nut, Hex, Lock, M6 X 1.00, Nl	2
	20	1071716	(005700-)	Tube, Hyd, Gear Pump Middle[S30 Mit2013]	2
	21	1071717	(005700-)	Tube, Hyd, Gear Pump Front[S30 Mit2013]	1

Fig. 71 - Hydraulic Valve Group, S30

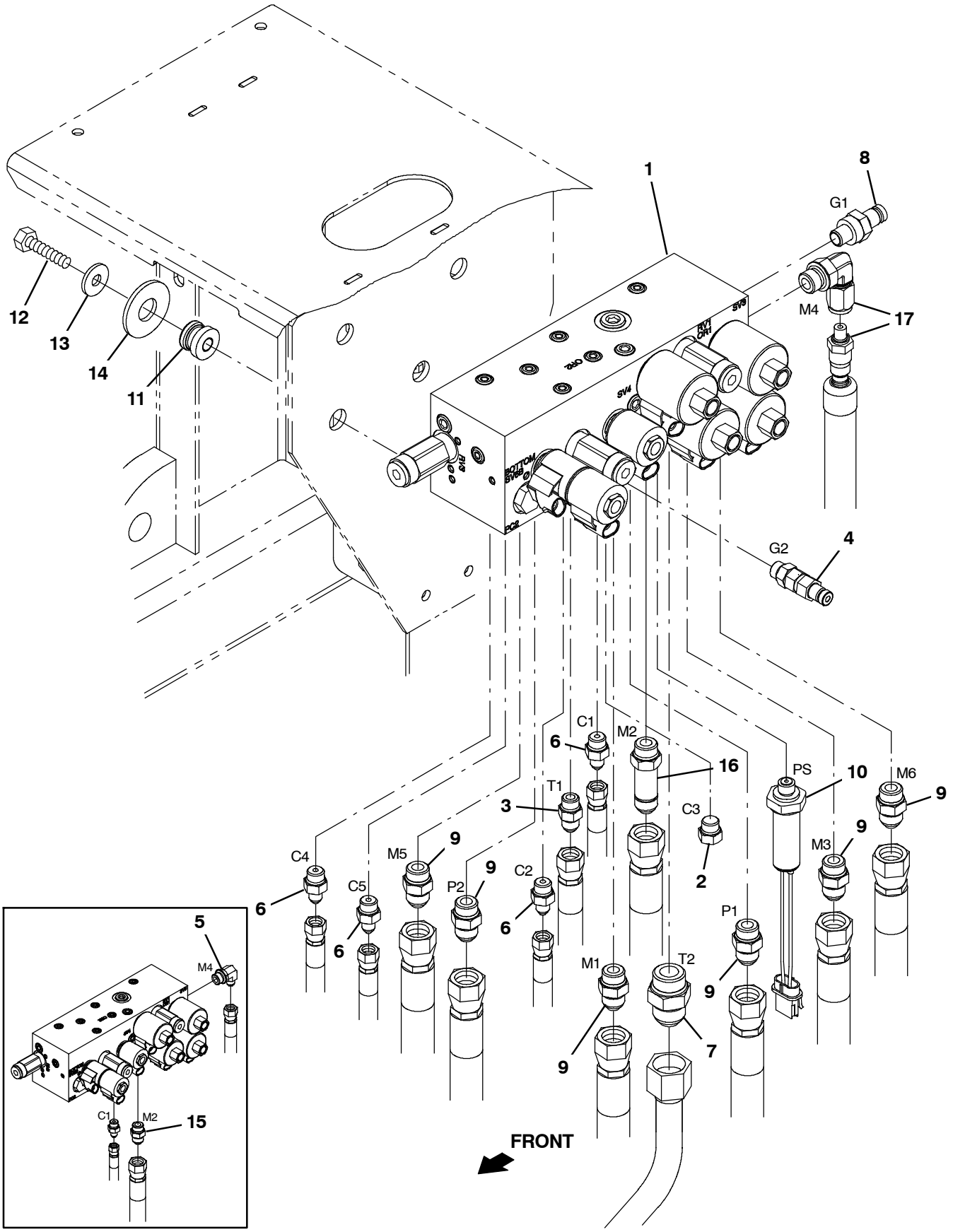

354715

Fig. 71 - Hydraulic Valve Group, S30

Ref.	Part No.	Serial Number	Description	Qty.
1	1040091	(000000-)	Valve, Hyd, Solenoid, 12vdc [06s] (See Breakdowns)	1
2	46482	(000000-)	Fitting, Hyd, Plug, Om06	1
3	56690	(000000-002999)	Fitting, Hyd, Str, Jm06/Om06	1
3	762433	(003000-)	Fitting, Hyd, Str, Fm06/Om06	1
4	1043652	(000000-)	Fitting, Hyd, Str, Om06/Qm04	1
5	47512	(000000-002999)	Fitting, Hyd, E90, Jm06/Om08	1
5	762437	(003000-005699)	Fitting, Hyd, E90, Fm06/Om08	1
6	55685	(000000-002999)	Fitting, Hyd, Str, Jm04/Om06	4
6	762426	(003000-)	Fitting, Hyd, Str, Fm04/Om06	4
7	34357	(000000-002999)	Fitting, Hyd, Str, Jm16/Om12	1
7	767410	(003000-)	Fitting, Hyd, Str, Fm16/Om12	1
8	395973	(000000-)	Fitting, Hyd, Str, Om04/Qm04	1
9	44869	(000000-002999)	Fitting, Hyd, Str, Jm08/Om08	6
9	762445	(003000-)	Fitting, Hyd, Str, Fm08/Om08	6
10	769077	(000000-)	Switch Assy, Press, No 02400psi	1
11	54274	(000000-)	Isolator, Vib, Bshg, 1.1d 0.6l .4b 0.78h	4
12	39285	(000000-)	Screw, Hex, M10 X 1.50 X 40, 8.8	4
13	39350	(000000-)	Washer, Flat, 0.75, Sae	4
14	13248	(000000-)	Washer, Flat, 0.40b 1.12d .12, Stl, Pl	4
15	44869	(000000-002999)	Fitting, Hyd, Str, Jm08/Om08	1
16	767430	(003000-)	Fitting, Hyd, Str, Fm08/Om08, Long	1
17	9011154	(005700-)	Hose Kit, Hyd, Replmt [S30]	1

Fig. 72 - Hydraulic Valve Group, S30 XP and X4

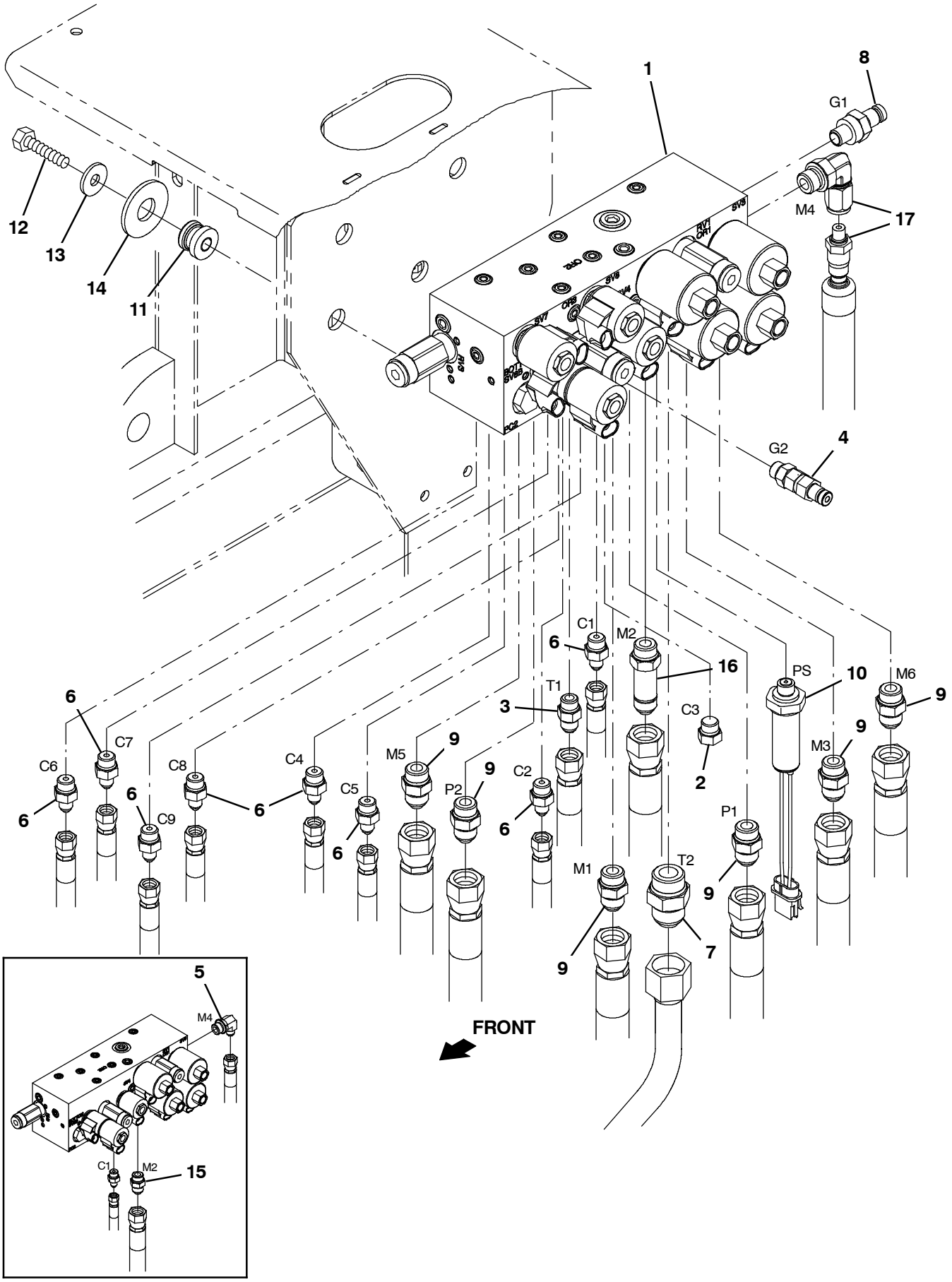

354719

Fig. 72 - Hydraulic Valve Group, S30 XP and X4

Ref.	Part No.	Serial Number	Description	Qty.
1	1034671	(000000-)	Valve, Hyd, Solenoid, 12vdc [08s] (See Breakdowns)	1
2	46482	(000000-)	Fitting, Hyd, Plug, Om06	1
3	56690	(000000-002999)	Fitting, Hyd, Str, Jm06/Om06	1
3	762433	(003000-)	Fitting, Hyd, Str, Fm06/Om06	1
4	1043652	(000000-)	Fitting, Hyd, Str, Om06/Qm04	1
5	47512	(000000-002999)	Fitting, Hyd, E90, Jm06/Om08	1
5	762437	(003000-005699)	Fitting, Hyd, E90, Fm06/Om08	1
6	55685	(000000-002999)	Fitting, Hyd, Str, Jm04/Om06	8
6	762426	(003000-)	Fitting, Hyd, Str, Fm04/Om06	8
7	34357	(000000-002999)	Fitting, Hyd, Str, Jm16/Om12	1
7	767410	(003000-)	Fitting, Hyd, Str, Fm16/Om12	1
8	395973	(000000-)	Fitting, Hyd, Str, Om04/Qm04	1
9	44869	(000000-002999)	Fitting, Hyd, Str, Jm08/Om08	6
9	762445	(003000-)	Fitting, Hyd, Str, Fm08/Om08	6
10	769077	(000000-)	Switch Assy, Press, No 02400psi	1
11	54274	(000000-)	Isolator, Vib, Bshg, 1.1d 0.6l .4b 0.78h	4
12	39285	(000000-)	Screw, Hex, M10 X 1.50 X 40, 8.8	4
13	39350	(000000-)	Washer, Flat, 0.75, Sae	4
14	13248	(000000-)	Washer, Flat, 0.40b 1.12d .12, Stl, Pl	4
15	44869	(000000-002999)	Fitting, Hyd, Str, Jm08/Om08	1
16	767430	(003000-)	Fitting, Hyd, Str, Fm08/Om08, Long	1
17	9011154	(005700-)	Hose Kit, Hyd, Replmt [S30]	1

Fig. 73 - Hydraulic Priority and Flow Divider Valve Group, S30 X4

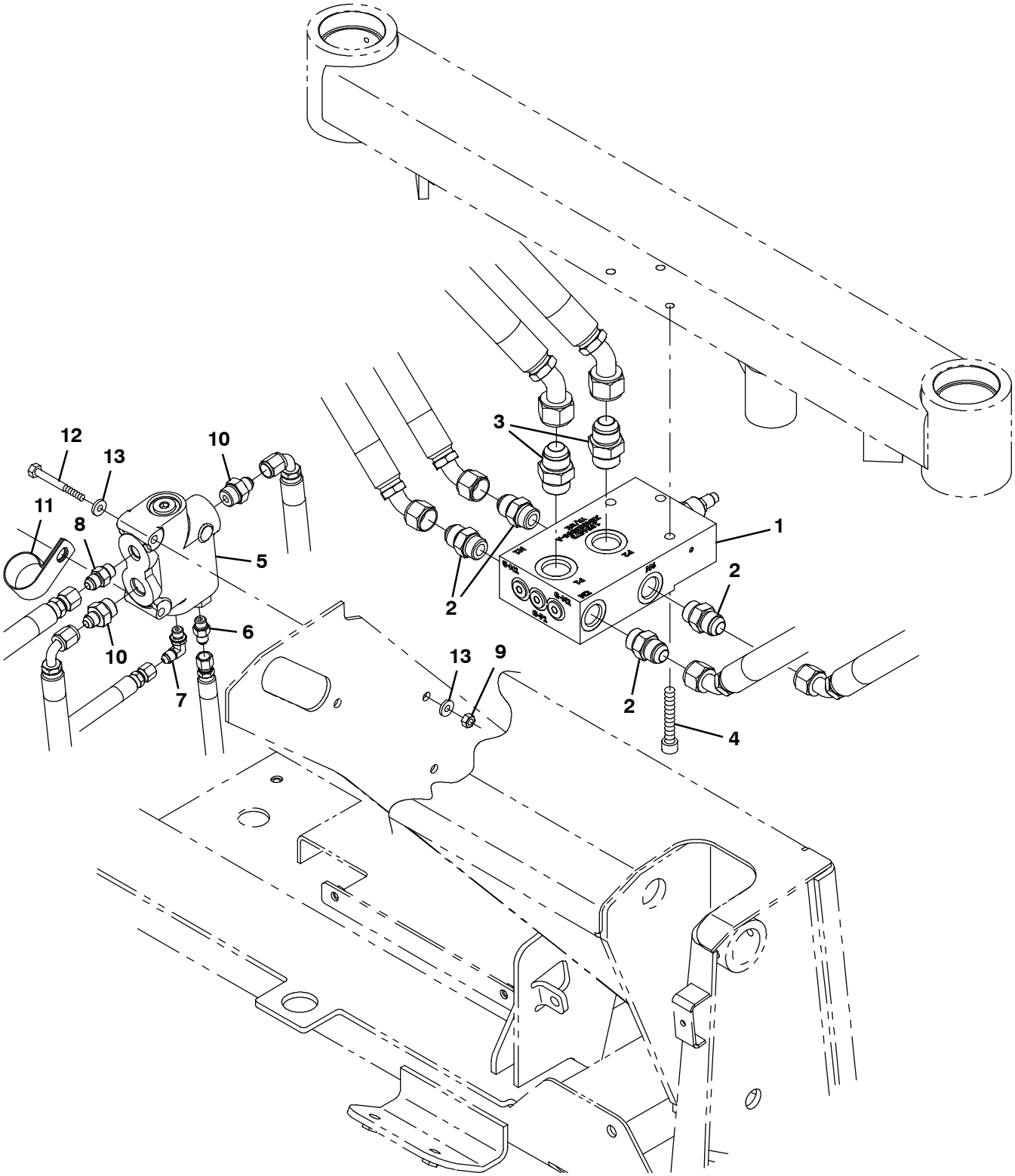

354776

Fig. 73 - Hydraulic Priority and Flow Divider Valve Group, S30 X4

Ref.	Part No.	Serial Number	Description	Qty.
1	1033685	(000000-)	Valve, Hyd, Flow Divider, Propel [4w] (See Breakdowns)	1
2	46480	(000000-)	Fitting, Hyd, Str, Jm10/Om10	4
3	42260	(000000-002999)	Fitting, Hyd, Str, Jm12/Om12	2
3	79868	(003000-)	Fitting, Hyd, Str, Fm12/Om12	2
4	396810	(000000-)	Screw, Soc, M10 X 1.50 X 50, 12.9	2
5	1035144	(000000-)	Valve, Hyd [Priority Ds05g1200]	1
6	55586	(000000-002999)	Fitting, Hyd, Str, Jm04/Om04	1
6	762428	(003000-)	Fitting, Hyd, Str, Fm04/Om04	1
7	77097	(000000-002999)	Fitting, Hyd, E90, Jm04/Om04	1
7	762427	(003000-)	Fitting, Hyd, E90, Fm04/Om04	1
8	56690	(000000-002999)	Fitting, Hyd, Str, Jm06/Om06	1
8	762433	(003000-)	Fitting, Hyd, Str, Fm06/Om06	1
9	08709	(000000-)	Nut, Hex, Lock, M8 X 1.25, Nl	2
10	52402	(000000-002999)	Fitting, Hyd, Str, Jm06/Om08	2
10	762438	(003000-)	Fitting, Hyd, Str, Fm06/Om08	2
11	70157	(000000-)	Clamp, Cable, Ss, 2.50d X 1.00w, 1hole	1
12	39279	(000000-)	Screw, Hex, M8 X 1.25 X 70, 8.8	2
13	32491	(000000-)	Washer, Flat, 0.31, Std	4

Fig. 74 - Electrical Schematic, S30 (000000-005699) (1 of 4)

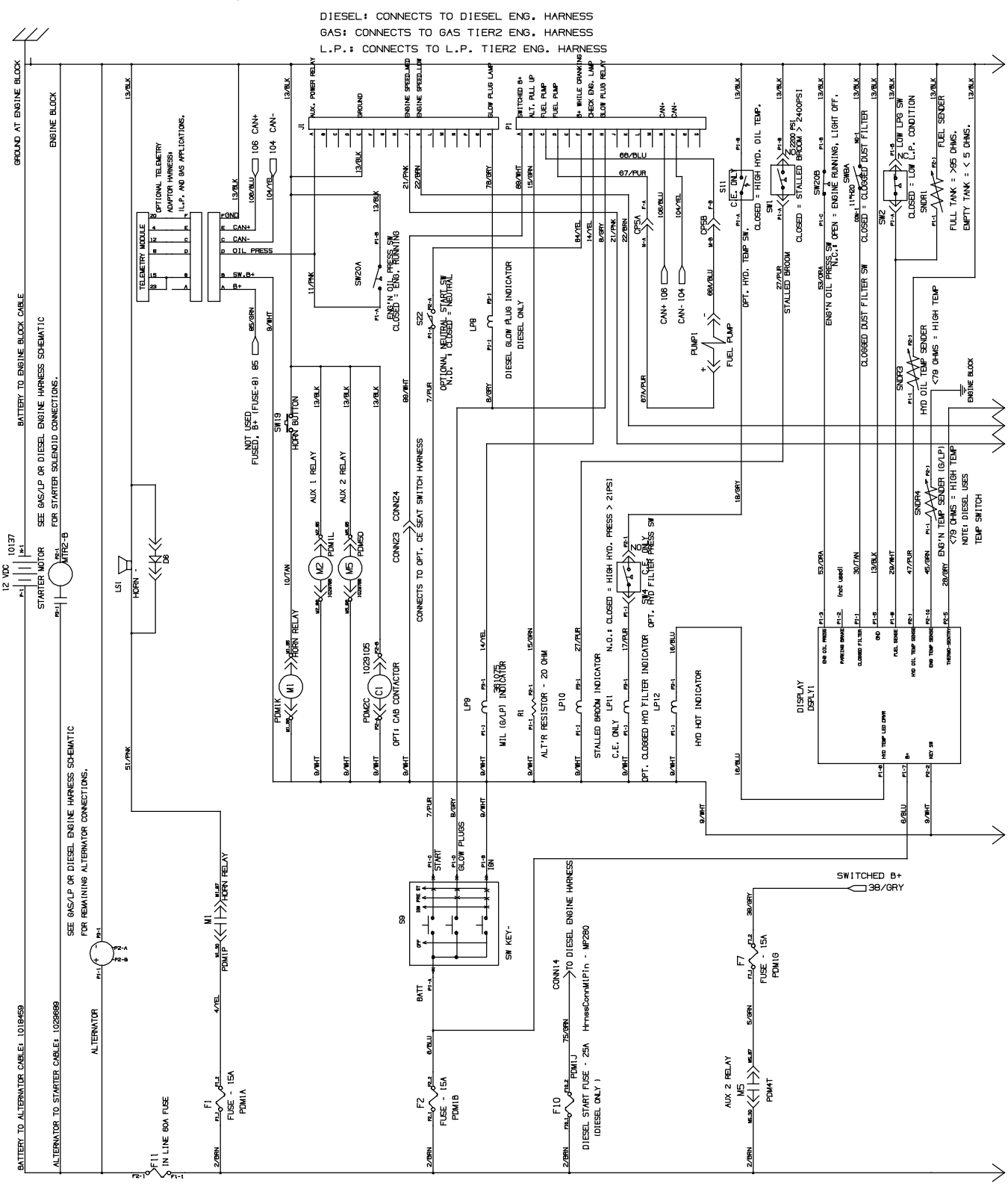

1029278- 354728

Fig. 74 - Electrical Schematic, S30 (000000-005699) (2 of 4)

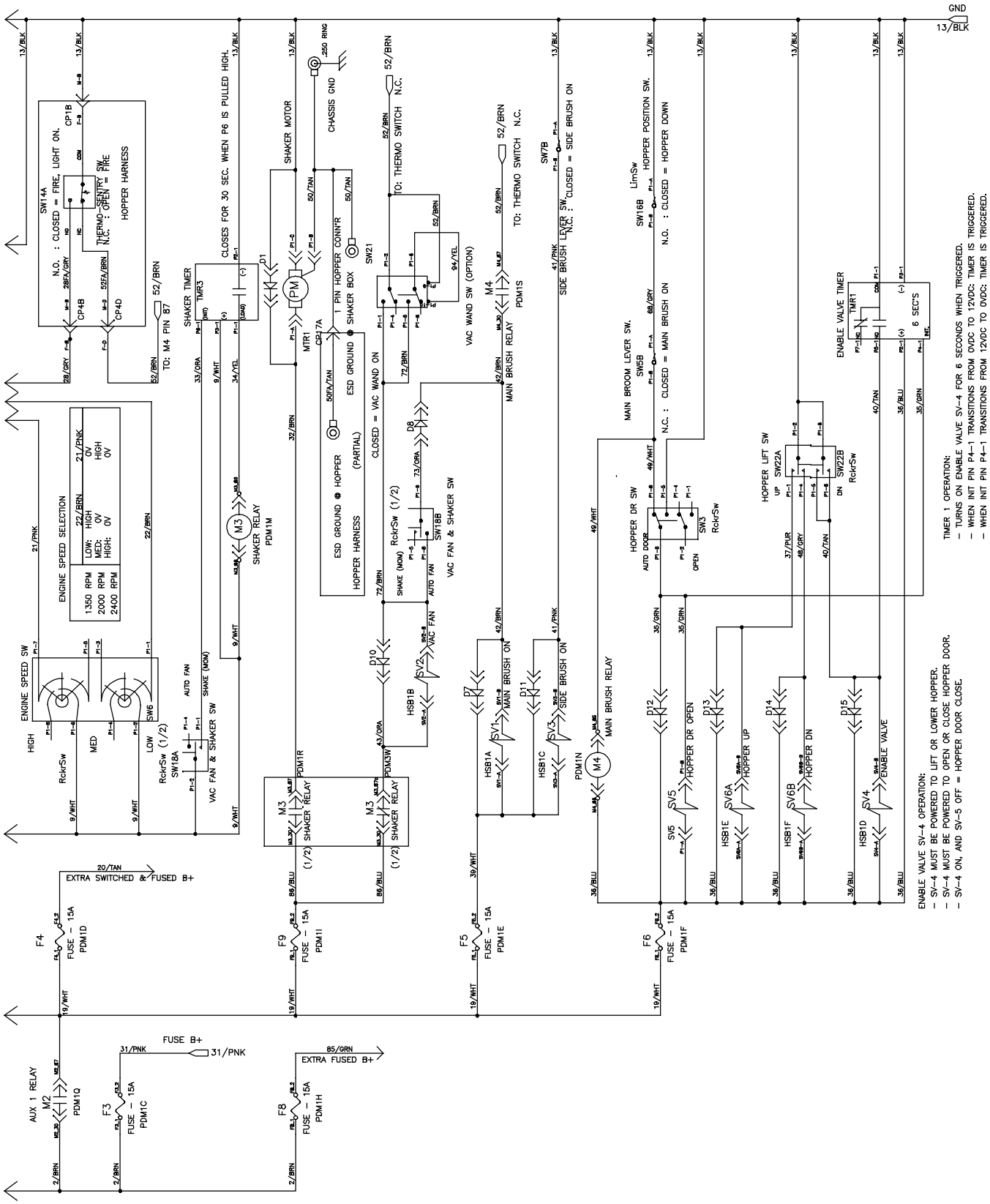

1029278- 354728

Fig. 74 - Electrical Schematic, S30 (000000-005699) (3 of 4)

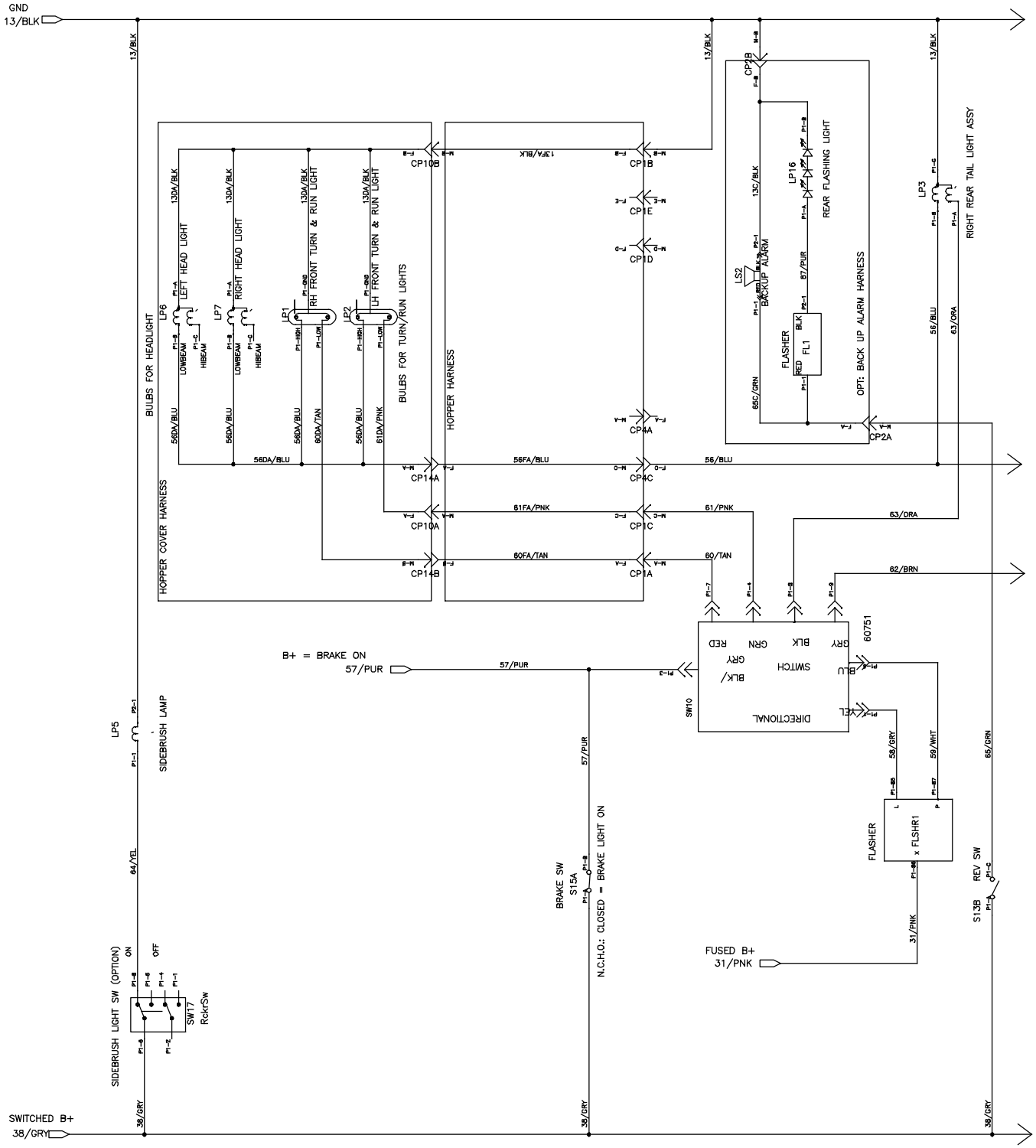

Fig. 74 - Electrical Schematic, S30 (000000-005699) (4 of 4)

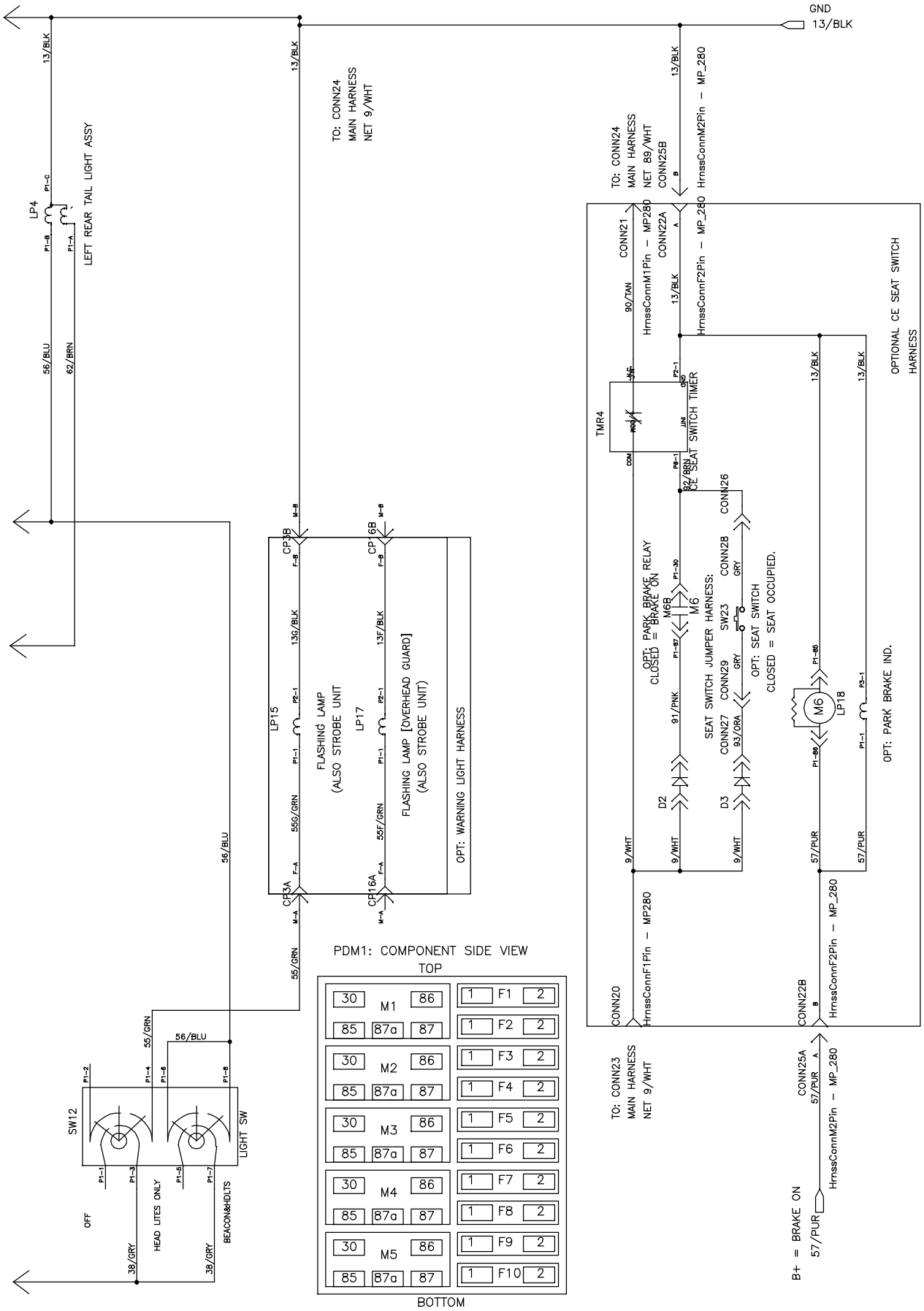

Fig. 75 - Electrical Schematic, S30 (005700-) (1 of 4)

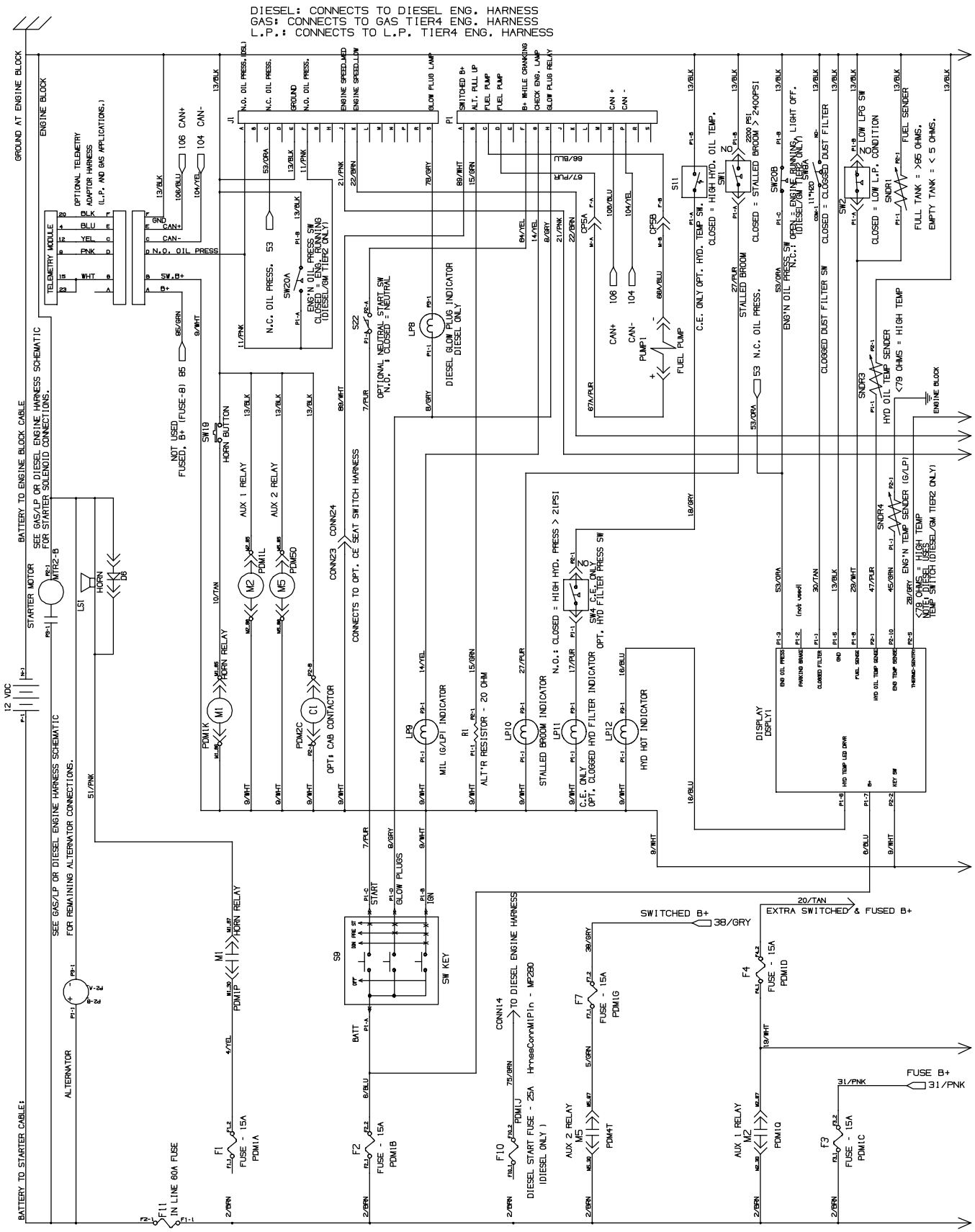

Fig. 75 - Electrical Schematic, S30 (005700-) (2 of 4)

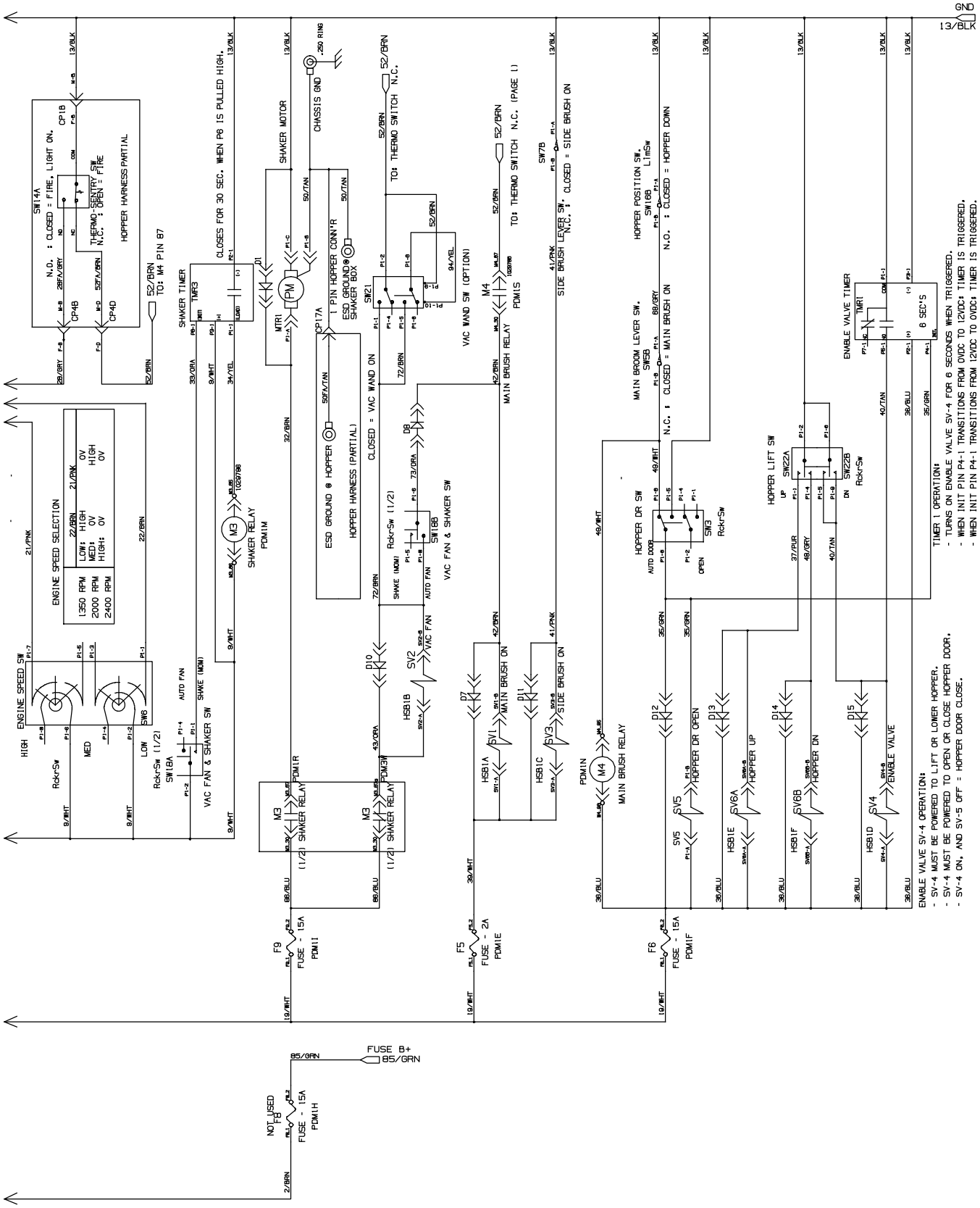

1029278- 356378

Fig. 75 - Electrical Schematic, S30 (005700-) (3 of 4)

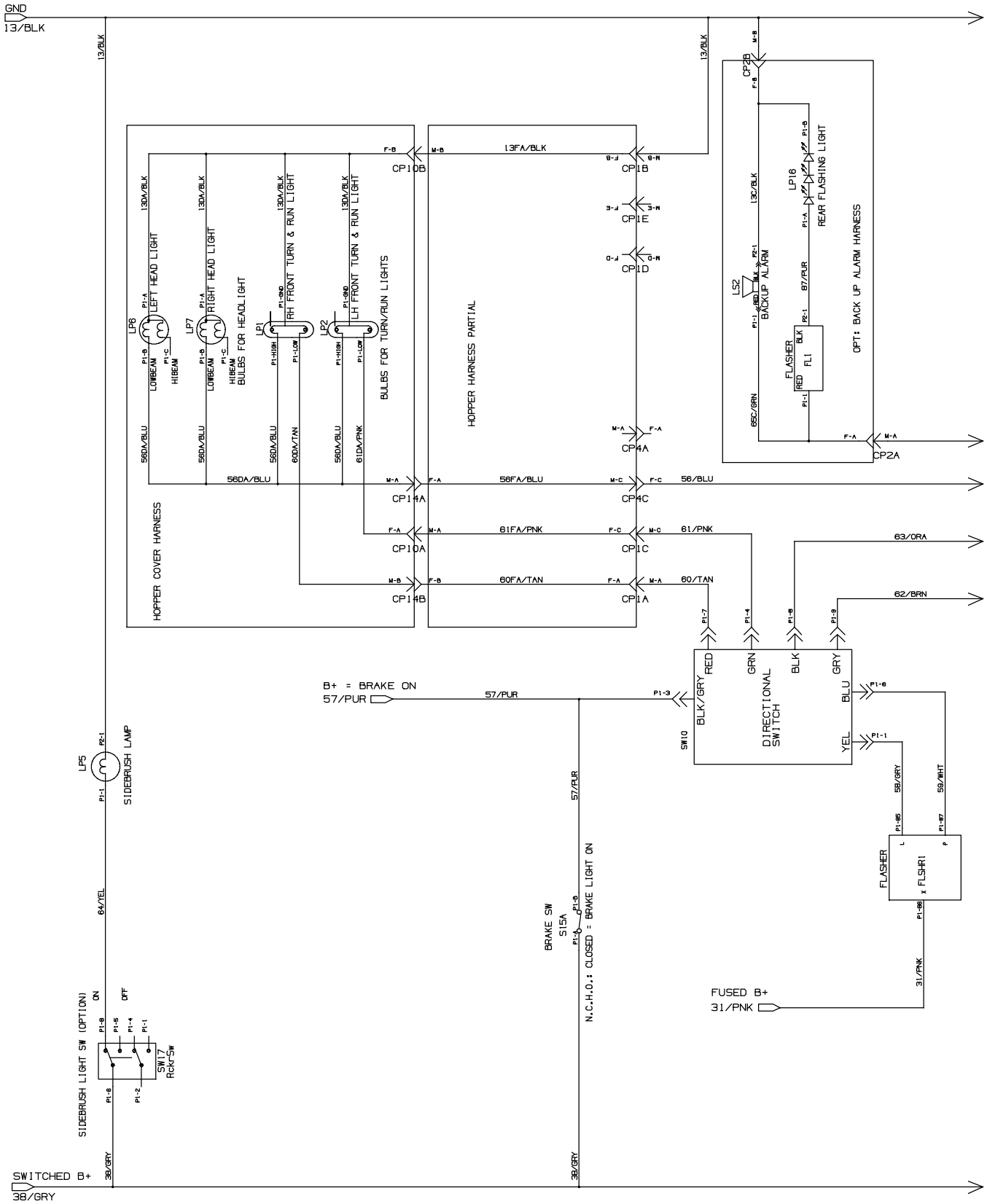

Fig. 75 - Electrical Schematic, S30 (005700-) (4 of 4)

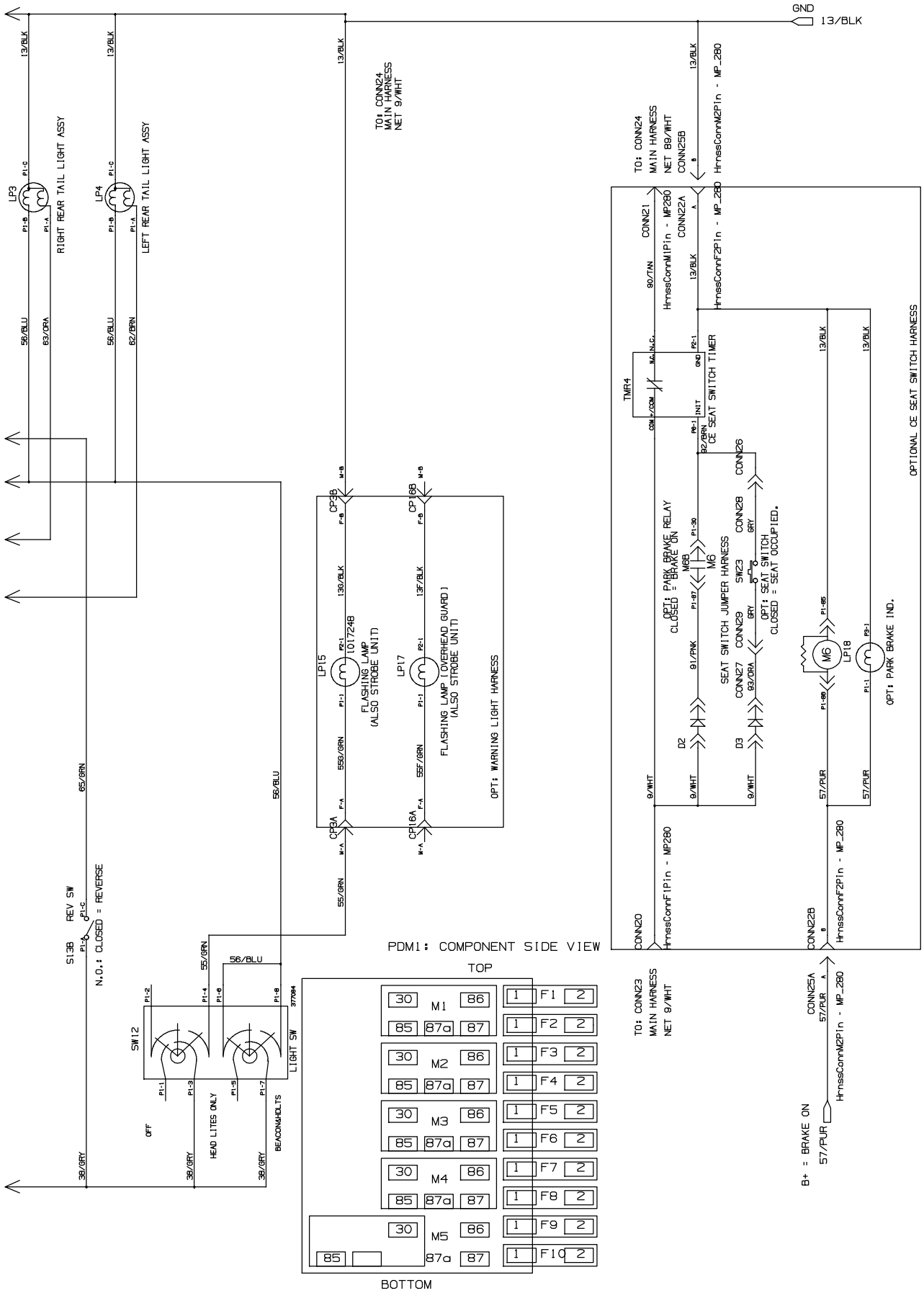

Fig. 76 - Electrical Schematic, S30 XP and X4 (000000-005699) (1 of 4)

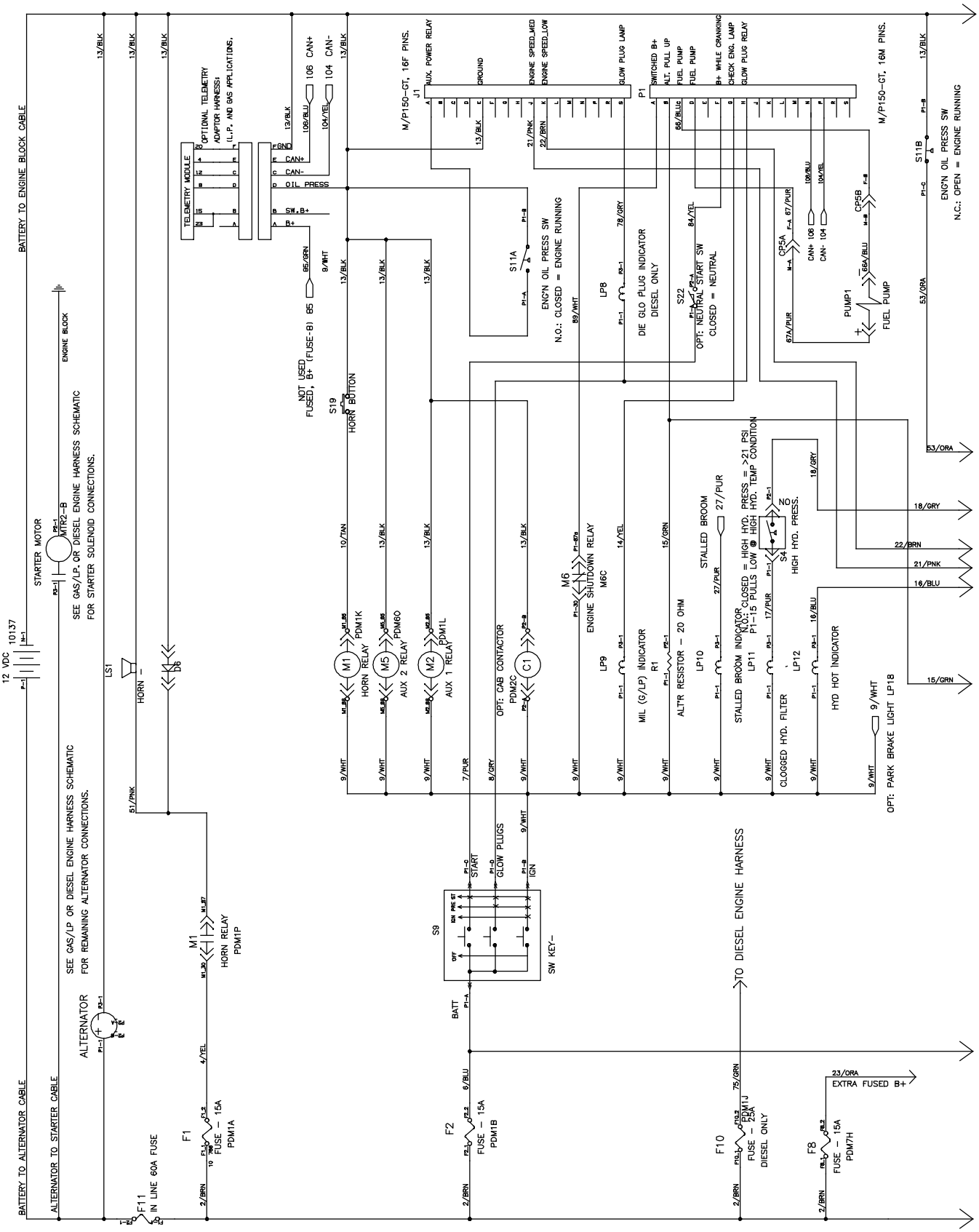

1029805 - 354729

Fig. 76 - Electrical Schematic, S30 XP and X4 (000000-005699) (2 of 4)

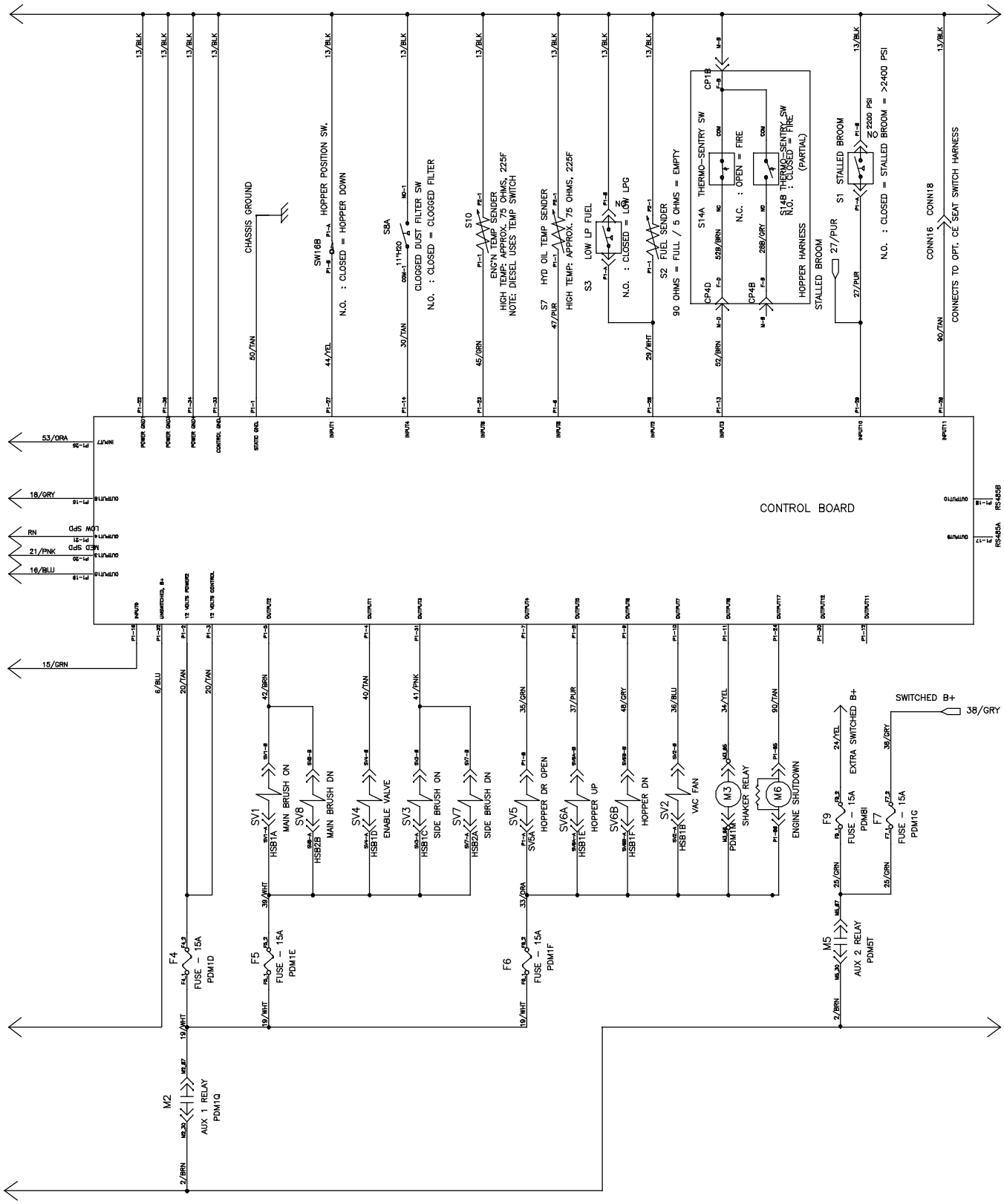

Fig. 76 - Electrical Schematic, S30 XP and X4 (000000-005699) (3 of 4)

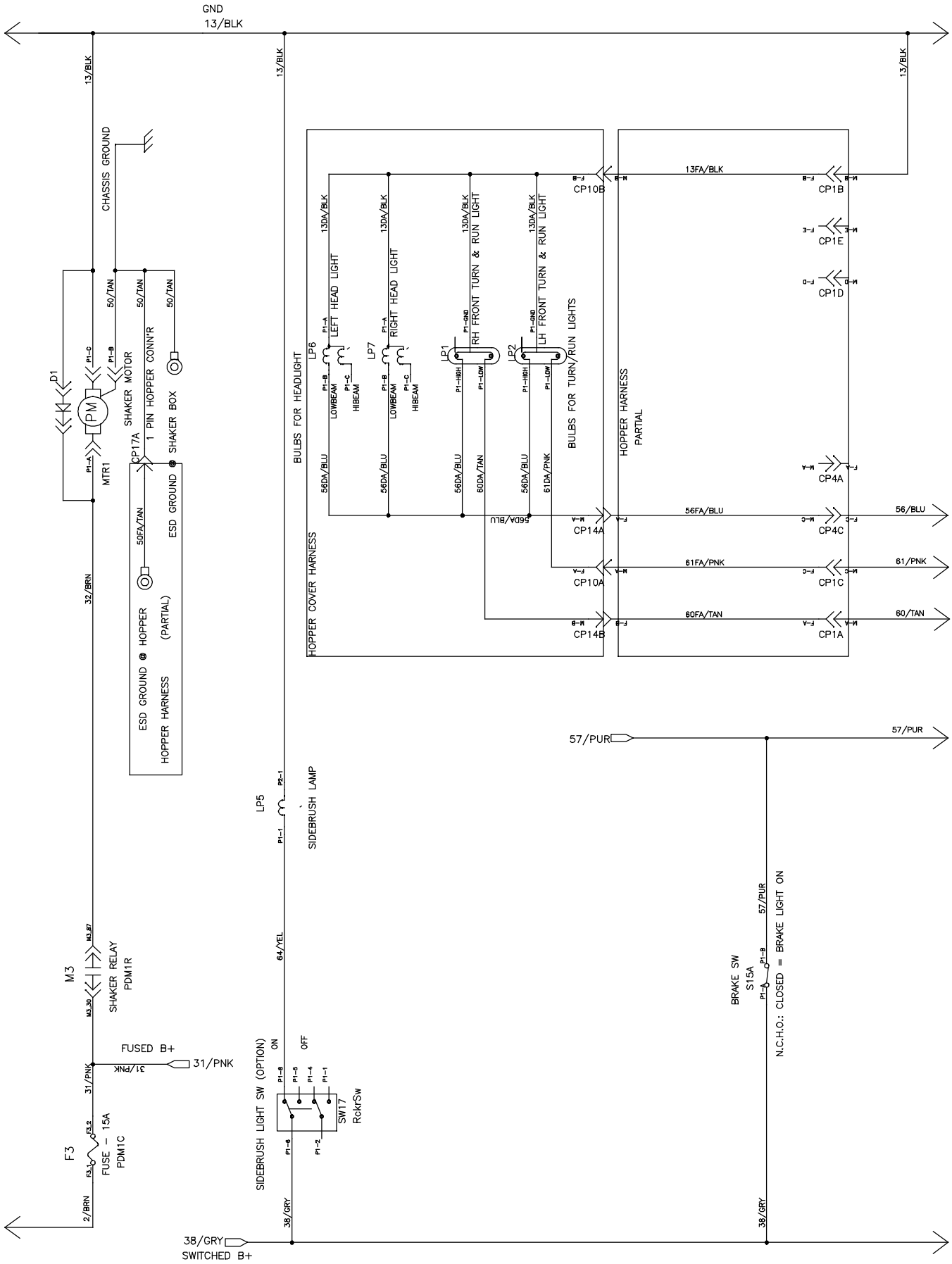

Fig. 76 - Electrical Schematic, S30 XP and X4 (000000-005699) (4 of 4)

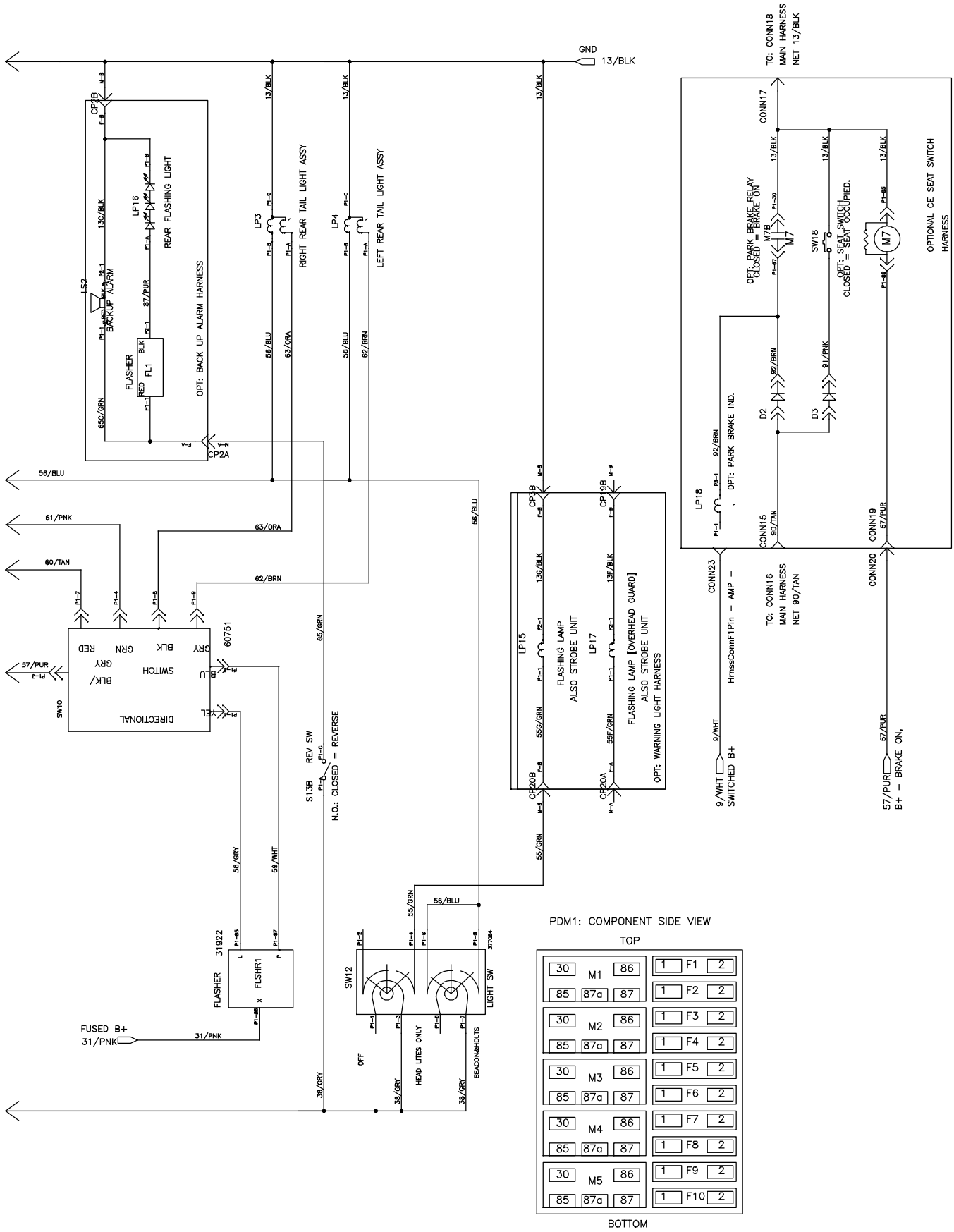

Fig. 77 - Electrical Schematic, S30 XP and X4 (005700-) (1 of 4)

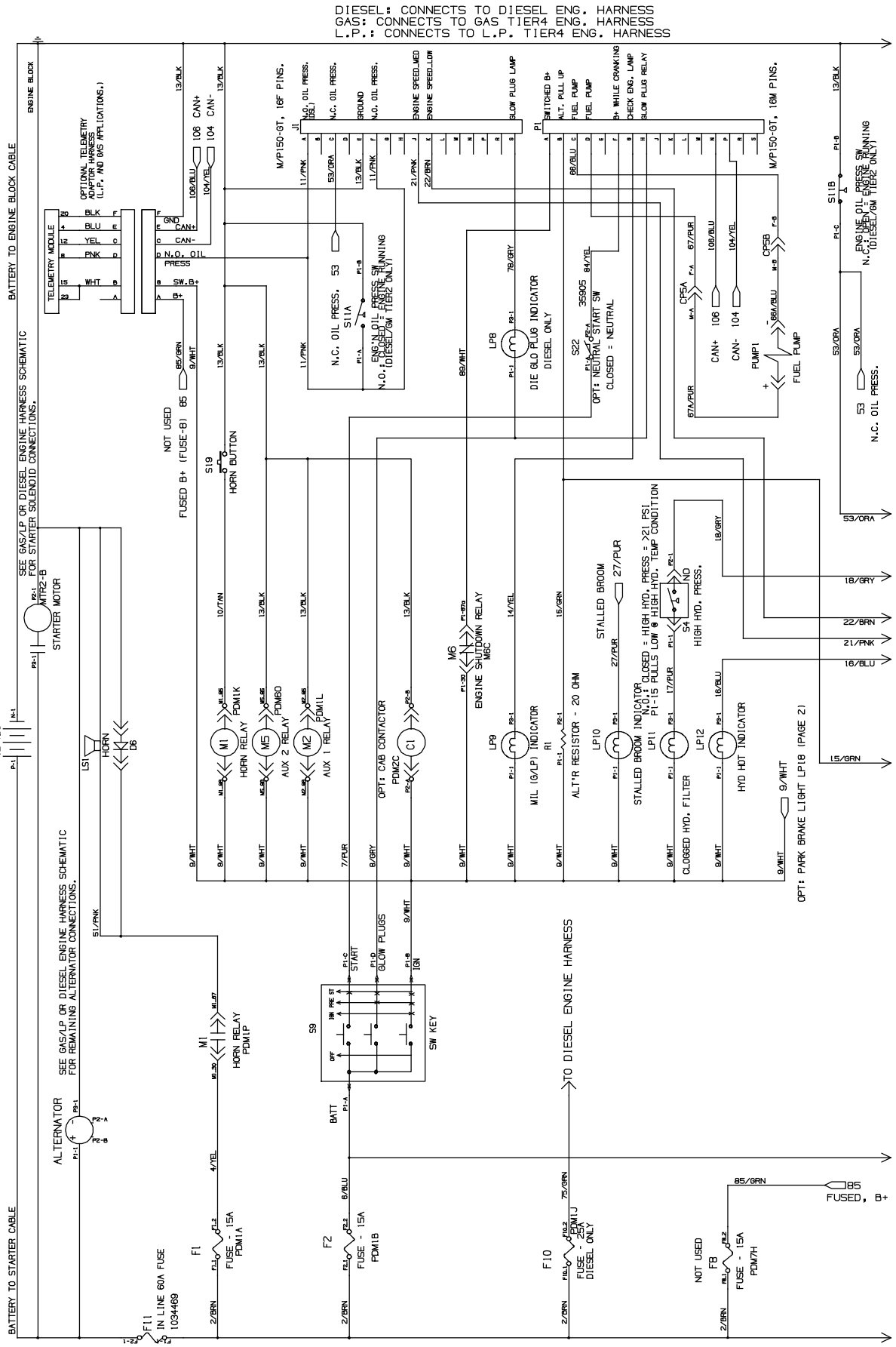

Fig. 77 - Electrical Schematic, S30 XP and X4 (005700-) (2 of 4)

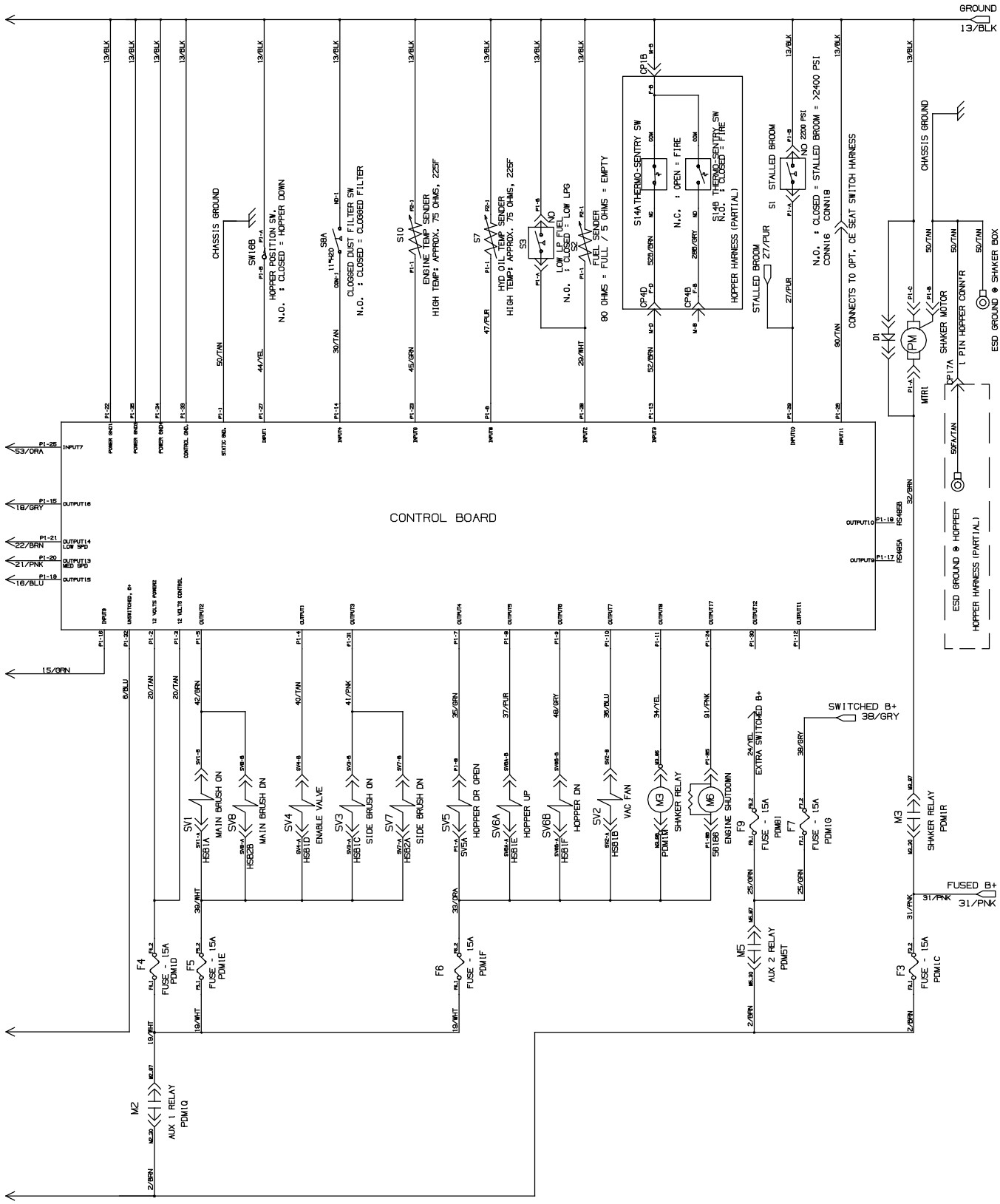

Fig. 77 - Electrical Schematic, S30 XP and X4 (005700-) (3 of 4)

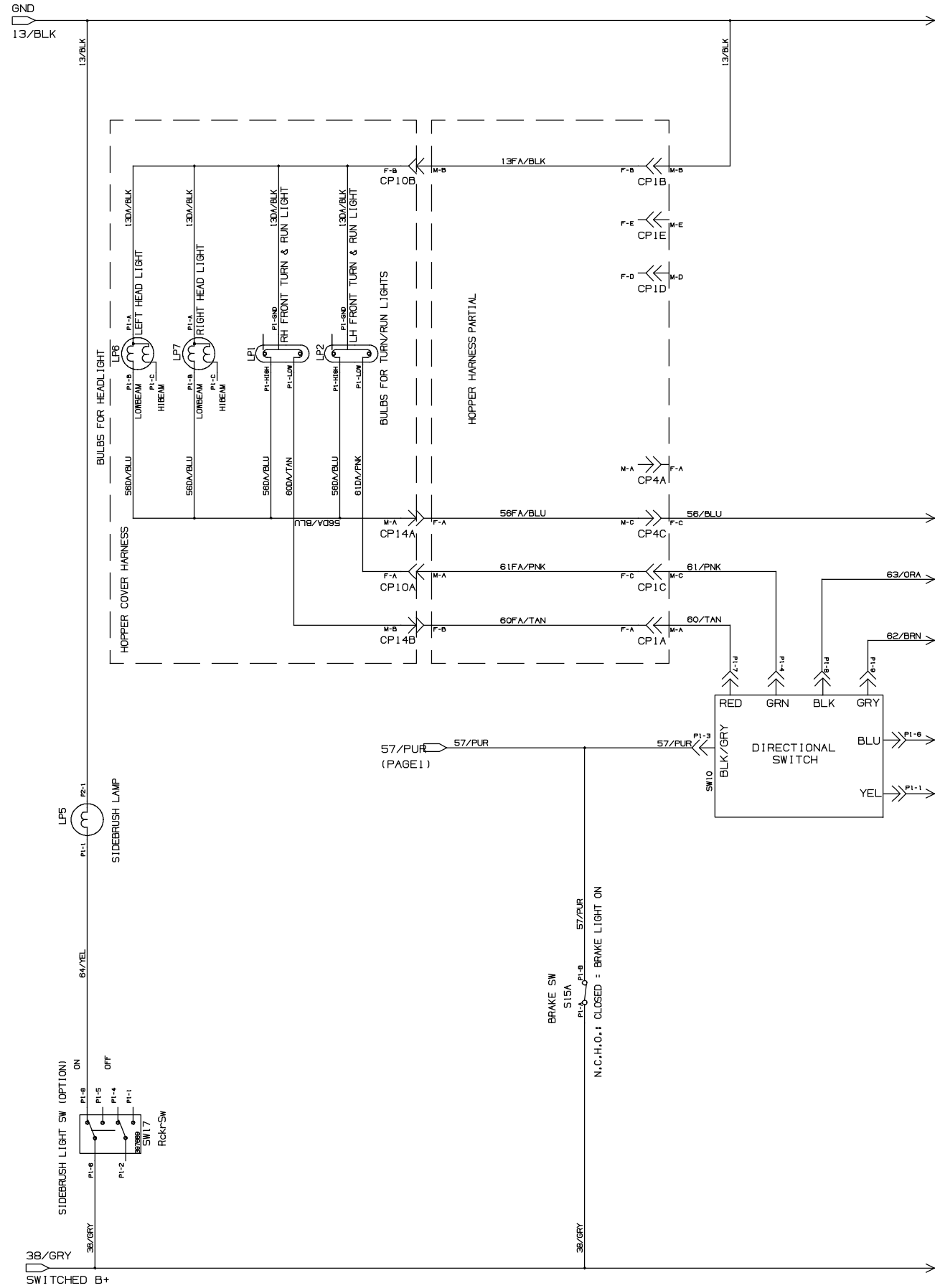

Fig. 77 - Electrical Schematic, S30 XP and X4 (005700-) (4 of 4)

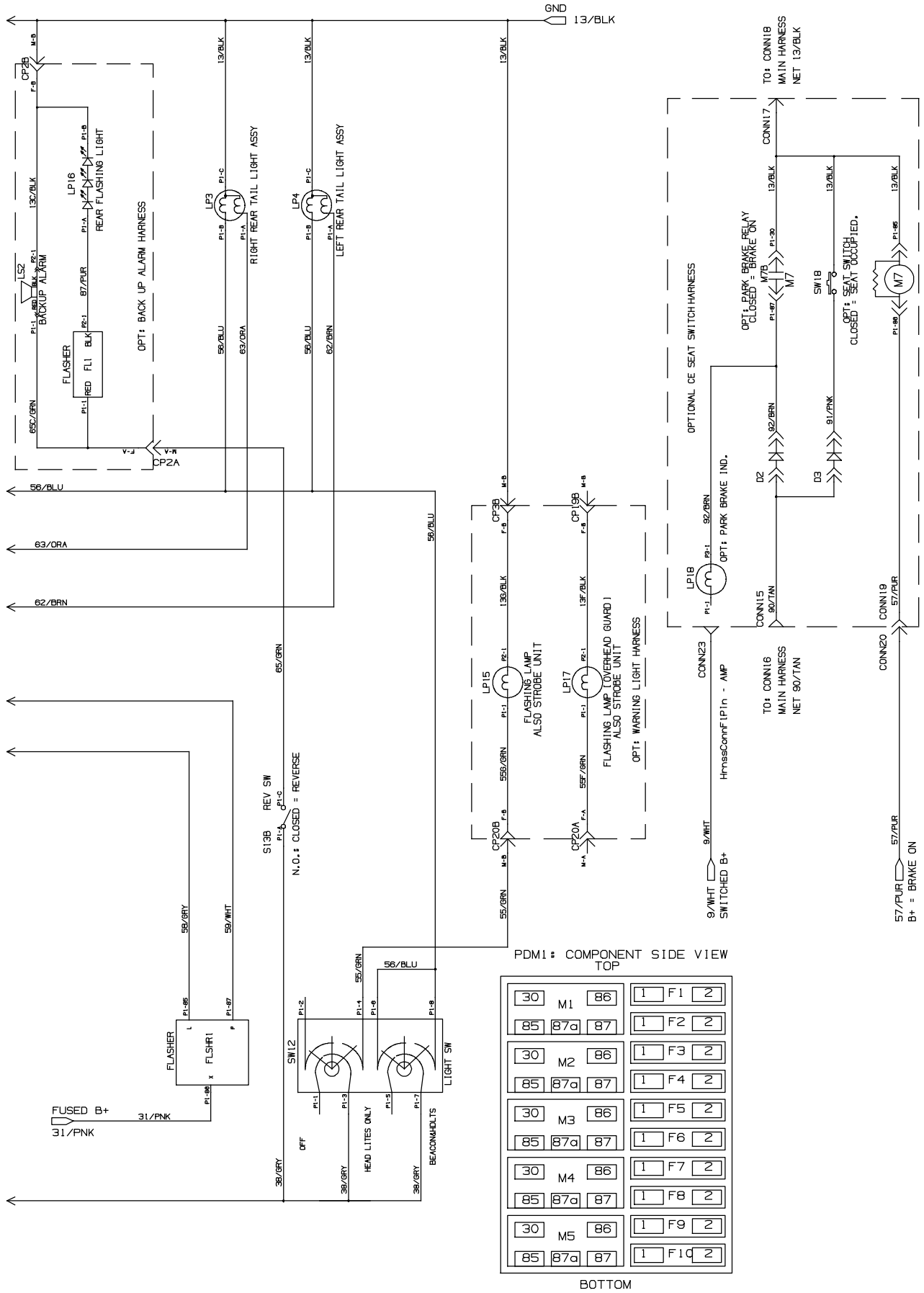

Fig. 78 - Electrical Schematic, Diesel Engine Harness

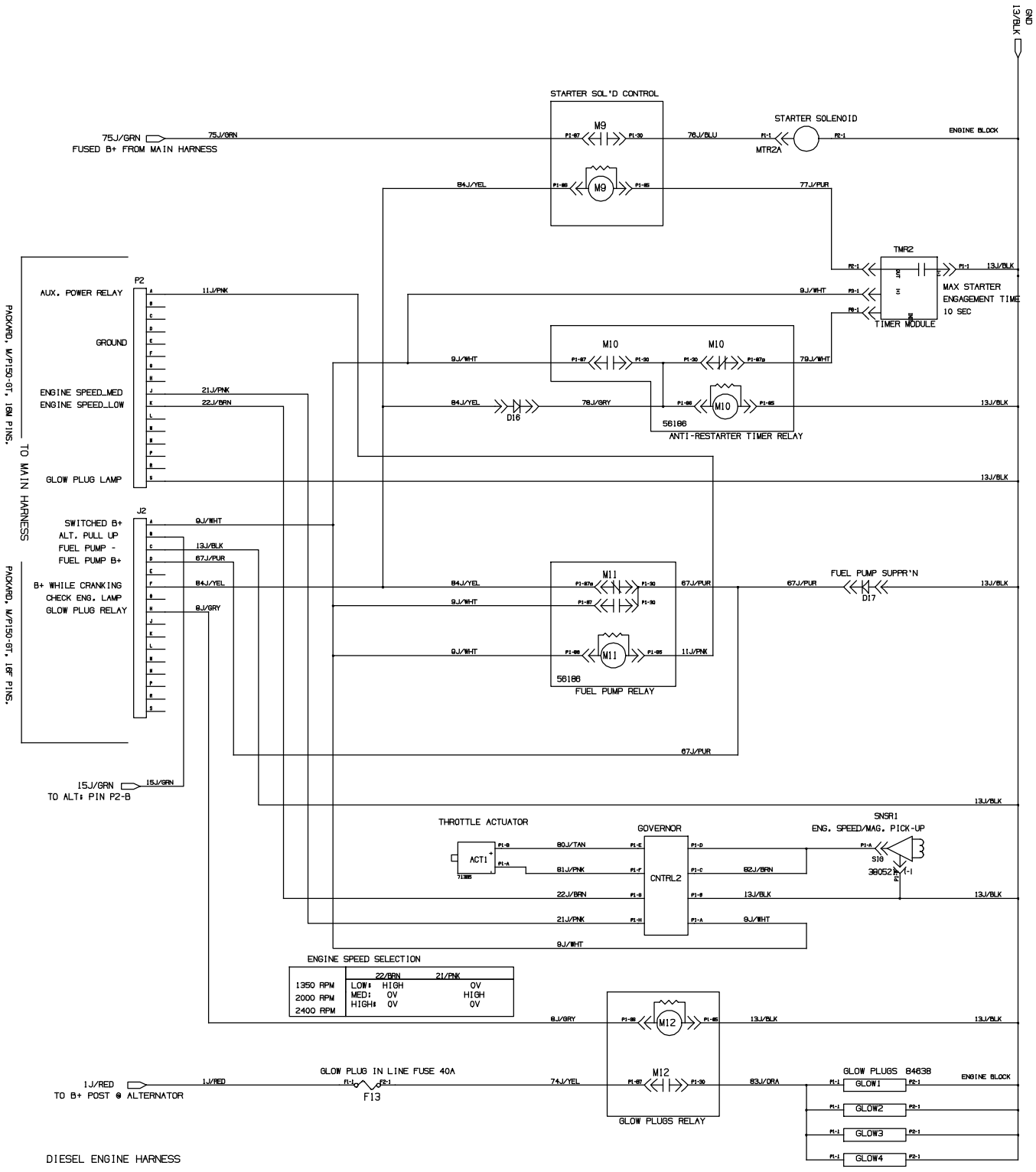

1029278- 354728

Fig. 79 - Electrical Wire Harnesses Group

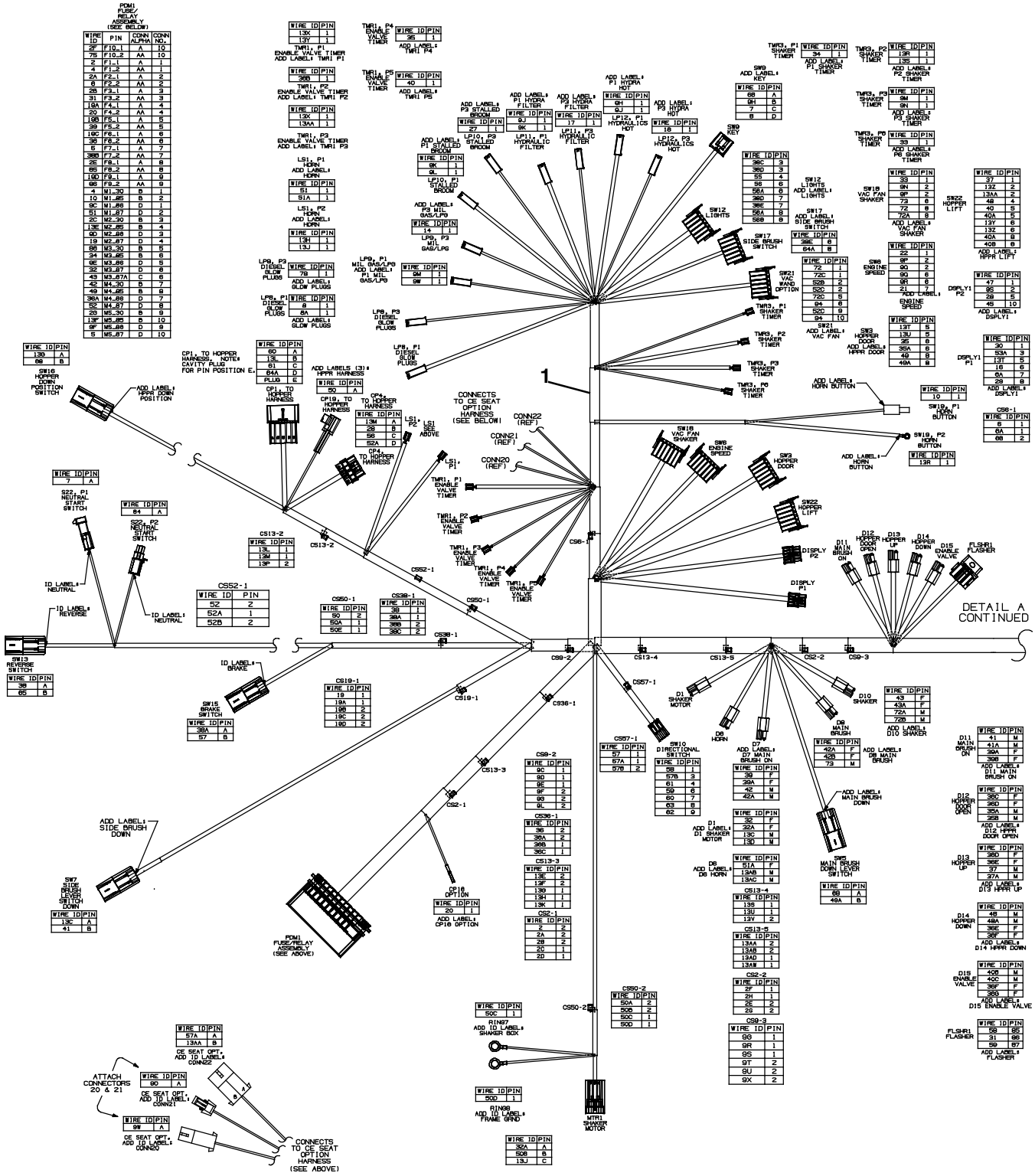

Fig. 79 - Electrical Wire Harnesses Group

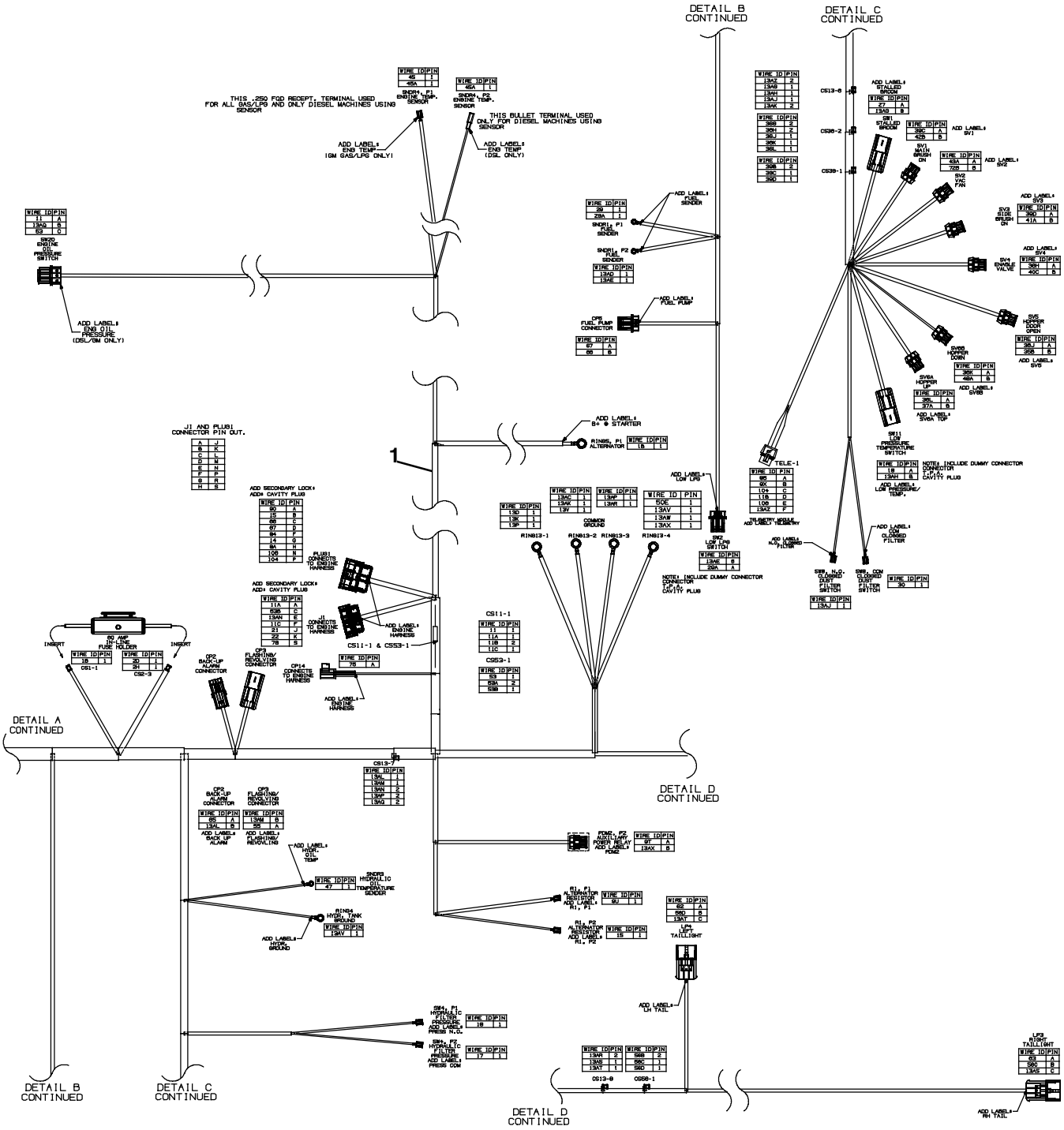

Fig. 79 - Electrical Wire Harnesses Group

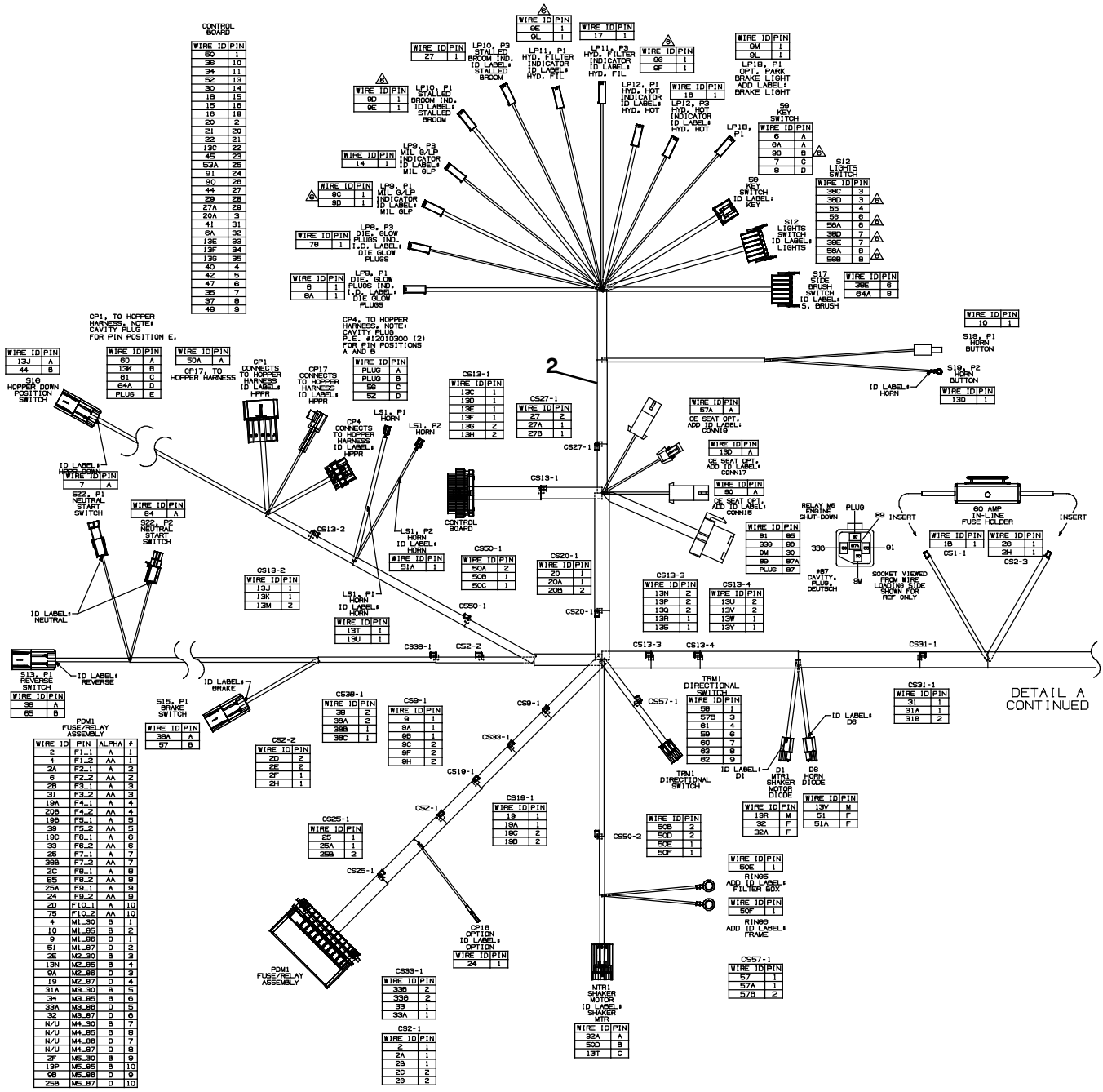

Fig. 79 - Electrical Wire Harnesses Group

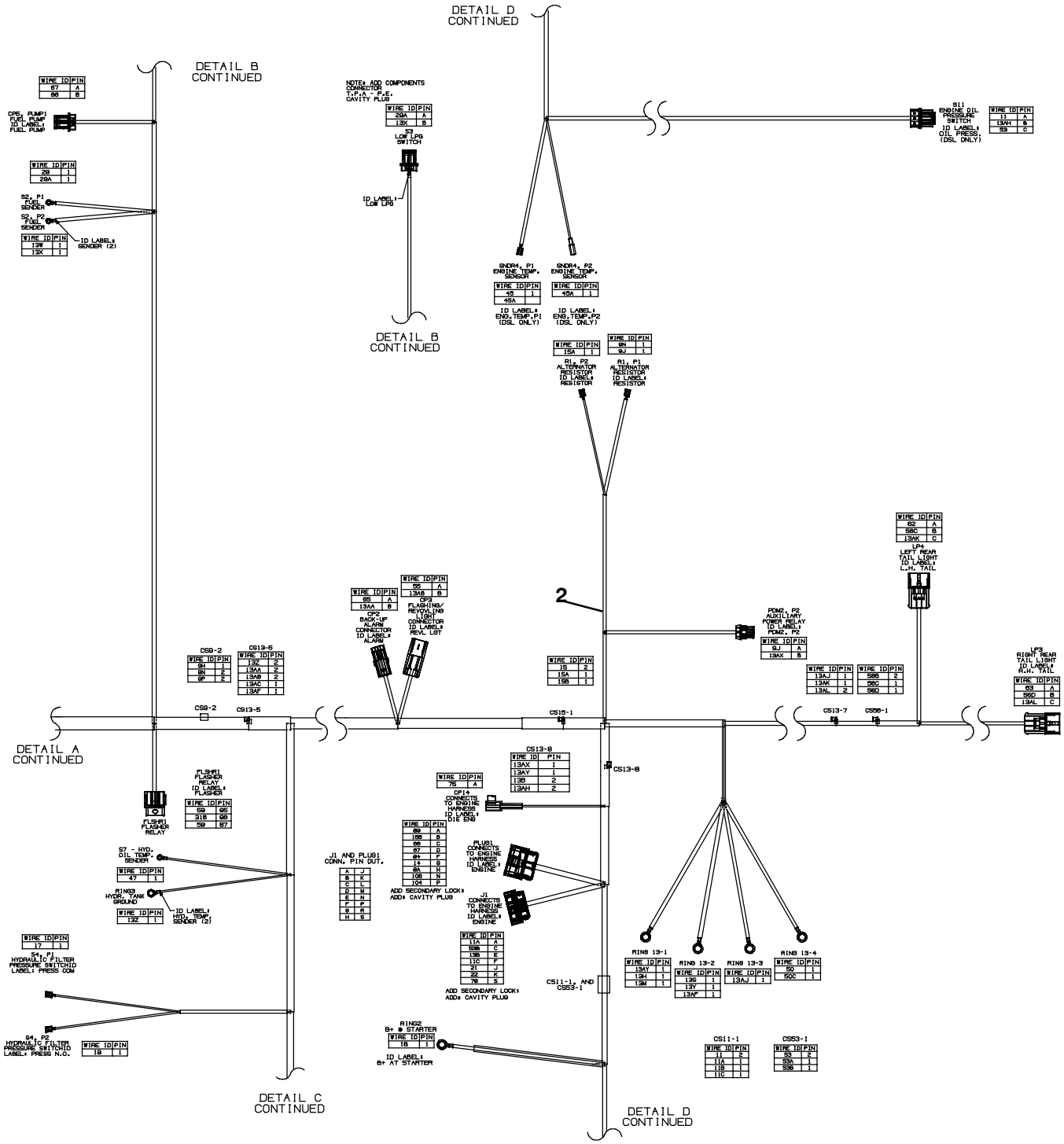

Fig. 79 - Electrical Wire Harnesses Group

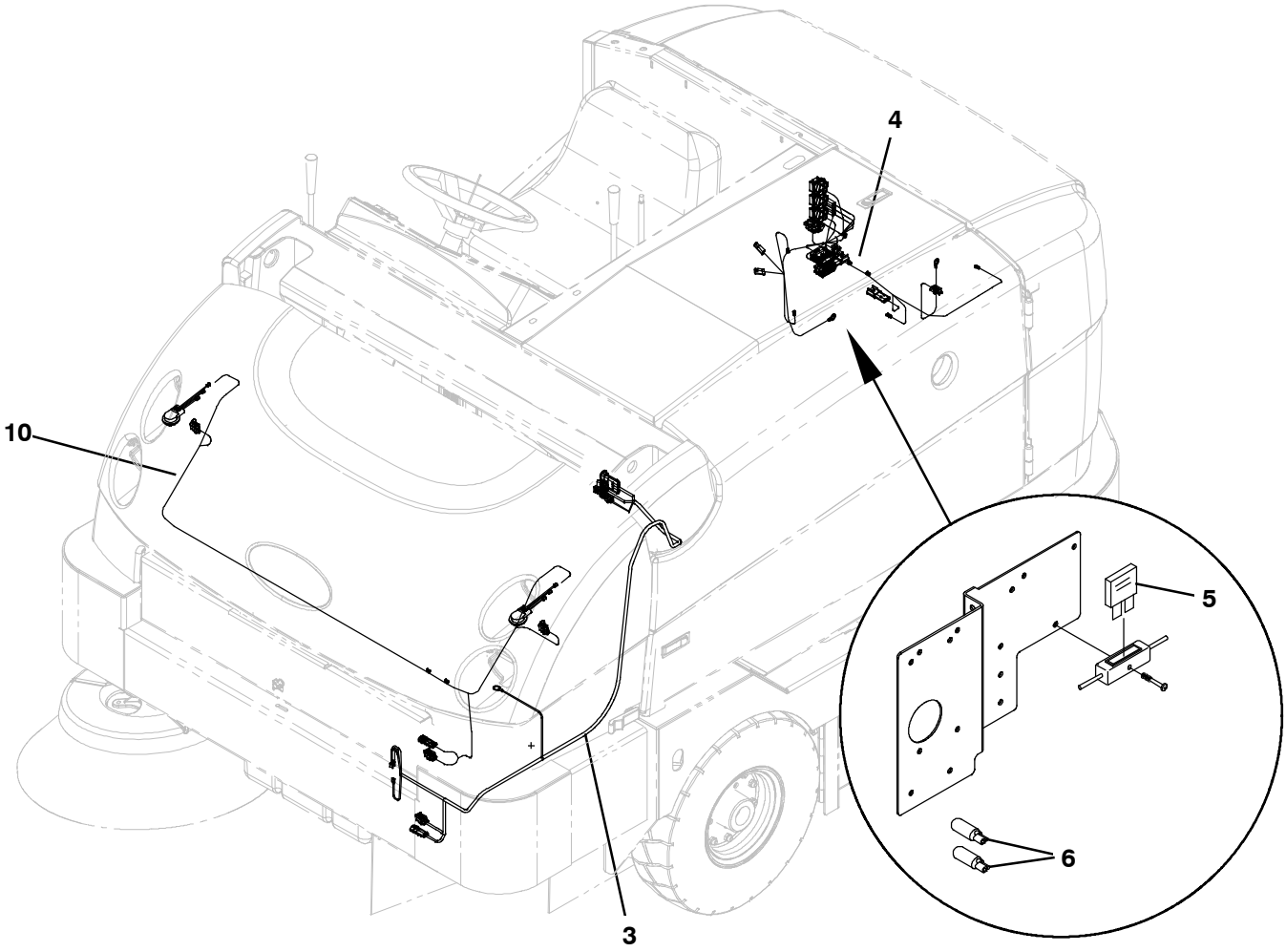

Fig. 79 - Electrical Wire Harnesses Group

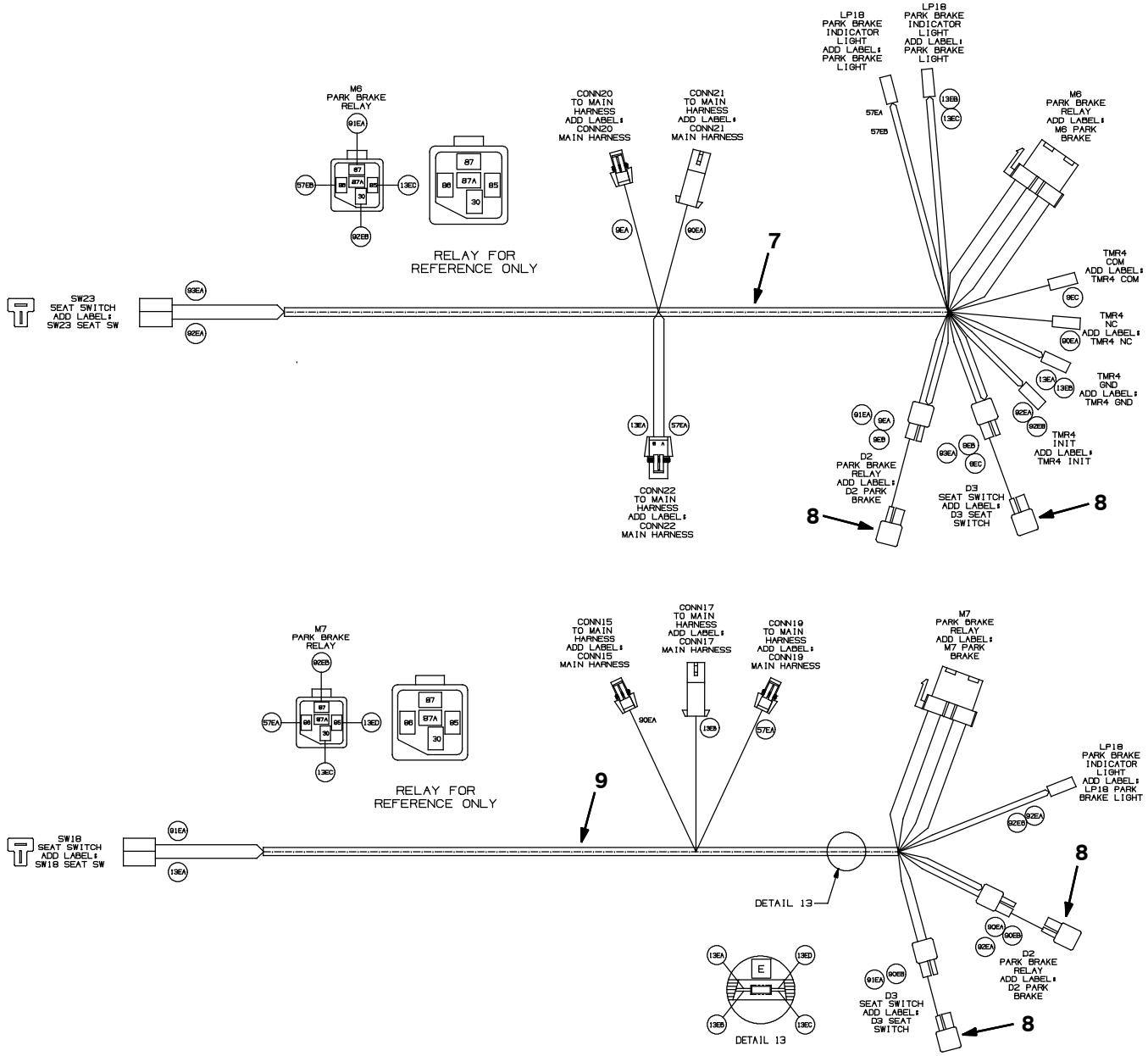

354733, 354826, 354827, 356287

	Ref.	Part No.	Serial Number	Description	Qty.
	1	1071857	(000000–)	Harness, Main, [S30] (S30 Only)	1
	2	1071860	(000000–)	Harness, Main [S30 Xp] (S30 XP Only)	1
	3	1038387	(000000–)	Harness, Hppr [S30]	1
▽	4	1030972	(000000–)	Harness, Eng, Dsl [S30]	1
▲	5	1035889	(000000–)	Fuse, Blade, 40A [Maxi]	1
▲		762516	(000000–)	Fuse, Blade, 030a, 32vdc	1
	6	222290	(000000–)	Diode, Ele, Plug	2
	7	1047618	(000000–)	Harness, Switch, Seat, Ce [S30] (CE Only) (S30 Only)	1
	8	222290	(000000–)	Diode, Ele, Plug (CE Only)	2
	9	1047619	(000000–)	Harness, Switch, Seat, Ce [S30 Xp] (CE Only) (S30 XP Only)	1
	10	1033520	(000000–)	Harness, Cover, Hppr [S30]	1

Fig. 80 - Label Group

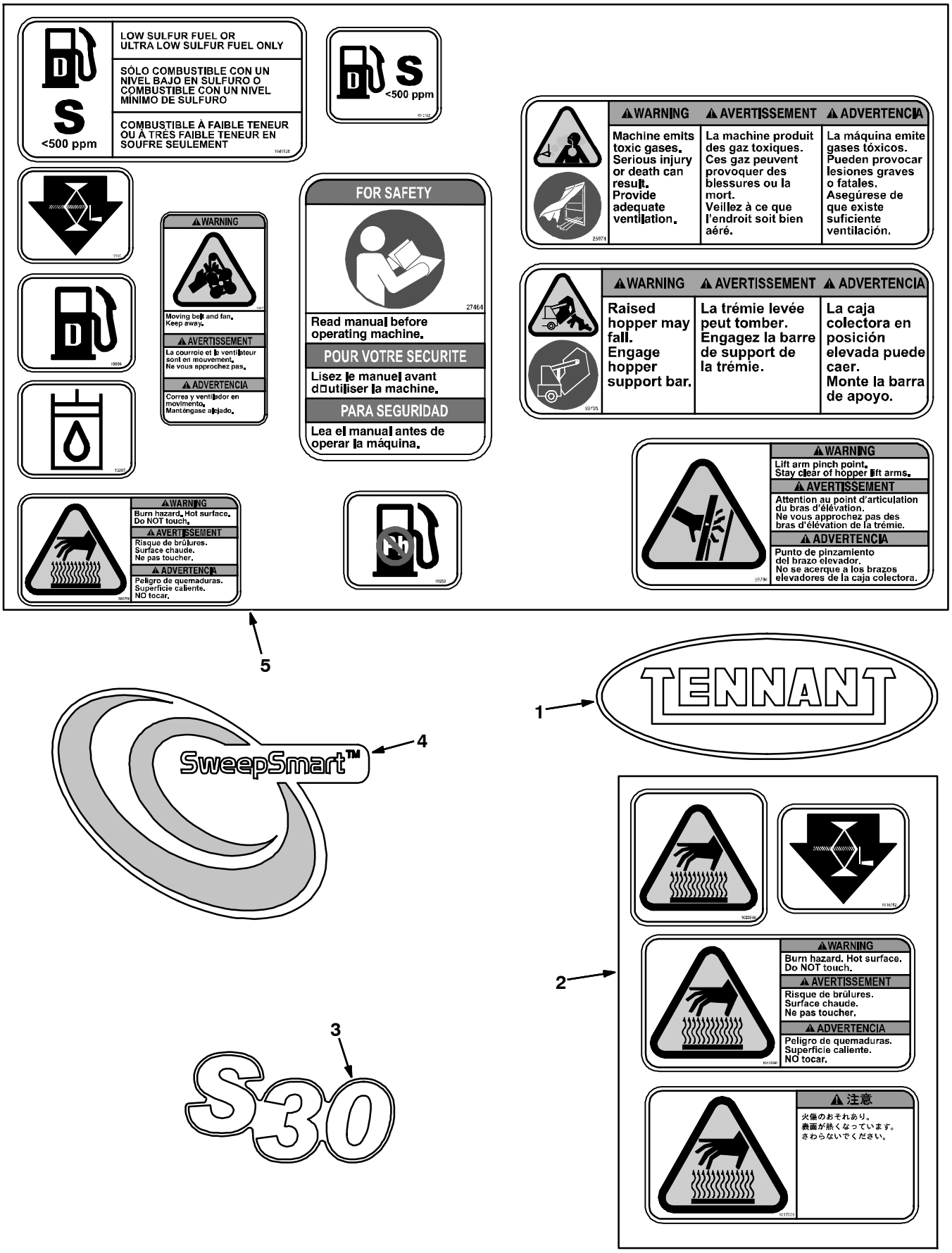

Fig. 80 - Label Group

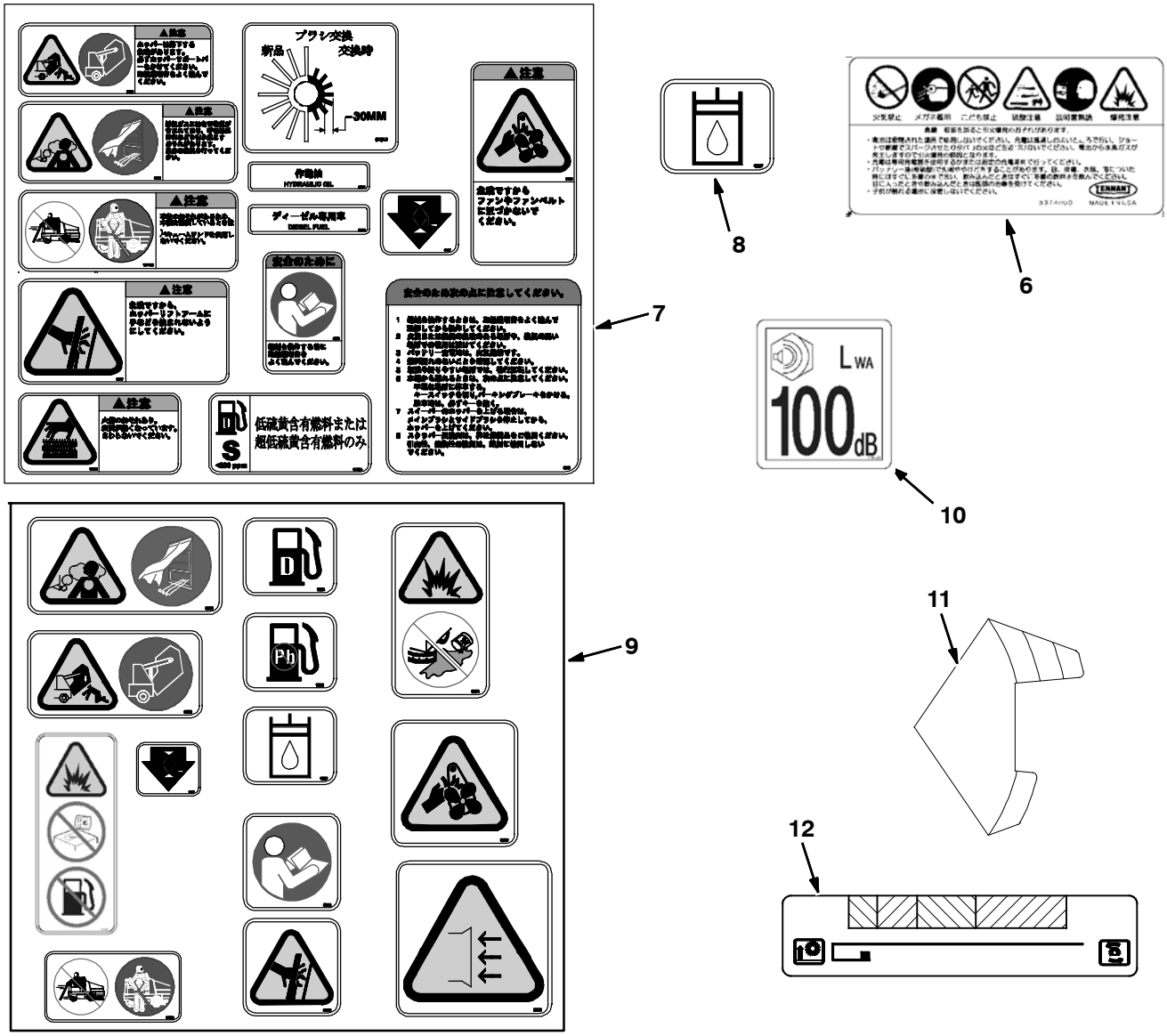

Ref.	Part No.	Serial Number	Description	Qty.
1	86877	(000000–)	Label, Logo, 10.4l, White [Tennant]	1
1	1047741	(002100–)	Label, Logo, 10.4l, White [Tennant]	1
2	1017141	(000000–)	Label Set, Hi Temp	1
3	1043372	(000000–)	Label, White [S30]	3
3	1061047	(002100–)	Label, White [S30]	3
4	1043373	(000000–)	Label, Cyclone [S30]	3
4	1061048	(002100–)	Label, Cyclone [S30]	3
5	59767	(000000–)	Label Set, Info/Hzrd [Multi–Mach]	1
6	374000	(000000–)	Label, Caution, Battery, Tj (Japan Only)	1
7	72381	(000000–)	Label Set, Info/Hzrd, Misc, Tj (Japan Only)	1
8	19207	(000000–)	Label, Info, Hyd Fluid, Na / Ce (Japan Only)	1
9	66188	(000000–)	Label Set, Info/Hzrd, Misc, Ce (CE Only)	1
10	398481	(000000–)	Label, Level, Sound [100 Db] (CE Only)	1
11	383203	(000000–)	Label, Info, Arm, Brush	1
12	383202	(000000–)	Label, Handle, Lift	1
	374224	(0000–)	Tape, Warning, Rh, Blk / Yel [33 Mtr] (CE Only)	1
	C460919	(0000–)	Tape, Warning, Left Blk/Yel [33 Mtr] (CE Only)	1

SECTION 3

Contents **Page**

Fig. 1 – Indoor Light Kit (000000–002099) . . 3–2
Fig. 2 – Indoor Light Kit (002100–) . . . 3–4
Fig. 3 – Outdoor Light Kit (000000–002099) 3–6
Fig. 4 – Outdoor Light Kit (002100–) . 3–8
Fig. 5 – Left Hand Side Brush Kit, S30 XP and X4 3–10
Fig. 6 – Vacuum Wand Group 3–14
Fig. 7 – Blower Wand Group 3–16
Fig. 8 – Overhead Guard Kit (000000–002099) 3–18
Fig. 9 – Overhead Guard Kit (002100–) 3–20
Fig. 10 – Cab Group 3–22
Fig. 11 – Cab Cover Group 3–24
Fig. 12 – Cab Door Group 3–26
Fig. 13 – Cab Heater Group 3–28
Fig. 14 – Cab Air Conditioner Group 3–30
Fig. 15 – Cab Fuel Cover Group (002100–) 3–32
Fig. 16 – Cab Wire Harness Group 3–34
Fig. 17 – Cab Wire Harness Electrical Schematic 3–35
Fig. 18 – Corner Bumper Kit (000000–002099) 3–36
Fig. 19 – Corner Bumper Kit (002100–) 3–37
Fig. 20 – Telemetry Group 3–38
Fig. 21 – Fire Extinguisher Kit 3–39
Fig. 22 – Documentation Group 3–40

Fig. 1 - Indoor Light Kit (000000-002099)

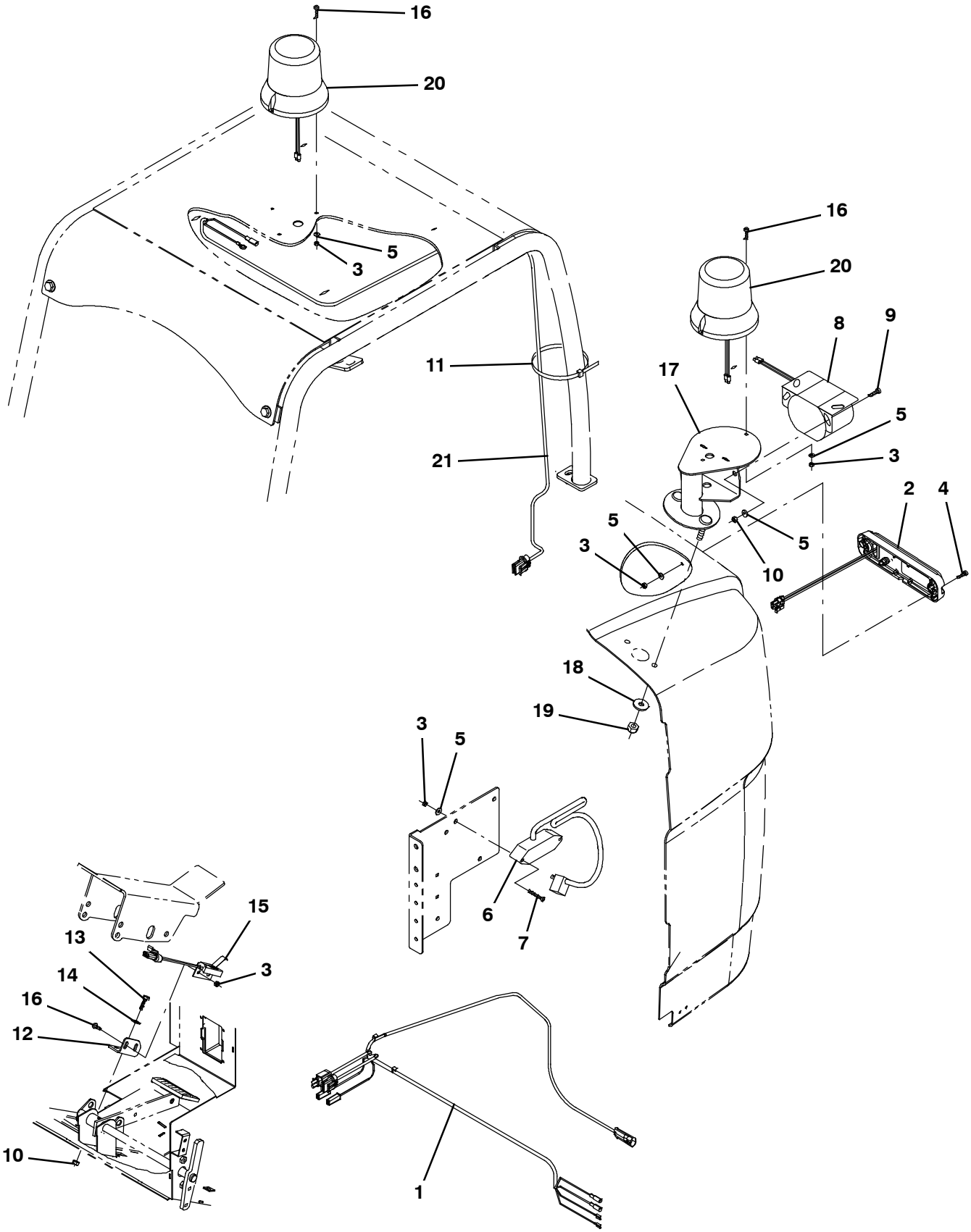

354758

Fig. 1 - Indoor Light Kit (000000-002099)

	Ref.	Part No.	Serial Number	Description	Qty.
▽		9003865	(000000-002099)	Light Kit, Inside, Ci [S30]	1
▲	1	1034191	(000000-002099)	Harness, Backup, Rev [S30]	1
▲	2	1036173	(000000-002099)	Light, Led, White, 12-24vdc	1
▲	3	06549	(000000-002099)	Nut, Hex, Lock, M5 X 0.80, Nl	6
▲	4	06935	(000000-002099)	Screw, Pan, Phl, M5 X 0.80 X 25, 4.8	2
▲	5	19066	(000000-002099)	Washer, Flat, 10	8
▲	6	1036985	(000000-002099)	Flasher, 12-80vdc, 2a	1
▲	7	06938	(000000-002099)	Screw, Pan, Phl, M5 X 0.80 X 40, 4.8	2
▲	8	9007131	(000000-002099)	Alarm Assy, Backup, 12-24vdc 82-107dba	1
▲	9	09145	(000000-002099)	Screw, Pan, Phl, M6 X 1.00 X 16, 4.8	2
▲	10	07785	(000000-002099)	Nut, Hex, Std, M6 X 1.00, Ss	4
▲	11	49266	(000000-002099)	Tie, Cable, Nyl, 07.3l .19w 1.8 Max D	4
▲	12	1036995	(000000-002099)	Bracket, Switch, Reverse	1
▲	13	08716	(000000-002099)	Screw, Hex, M6 X 1.00 X 20, Ss	2
▲	14	32483	(000000-002099)	Washer, Flat, 0.25, Sae	2
▲	15	1039735	(000000-002099)	Switch, Snap, 15a No	1
▲	16	06933	(000000-002099)	Screw, Pan, Phl, M5 X 0.80 X 16, 4.8	4
▲	17	1036111	(000000-002099)	Bracket Wldt, Light, Flsh	1
▲	18	13248	(000000-002099)	Washer, Flat, 0.40b 1.12d .12, Stl, Pl	2
▲	19	08714	(000000-002099)	Nut, Hex, Lock, M10 X 1.5, Nl, Ss	2
▲▽	20	82200	(000000-002099)	Light, Flsh, 12vdc, Amb, Rwk	1
▲▲		9000879	(000000-002099)	Lens, Amb, F/ Strobe / Flasher	1
▲▲		9000846	(000000-002099)	Lamp, Bulb, Flsh	1
▲▲		1027798	(000000-002099)	Lens, Red, F/ Strobe / Flasher	1
▲▲		1027800	(000000-002099)	Lens, Blu, F/ Strobe / Flasher	1
▲	21	1030973	(000000-002099)	Harness, Ohg [S30]	1

Fig. 2 - Indoor Light Kit (002100-)

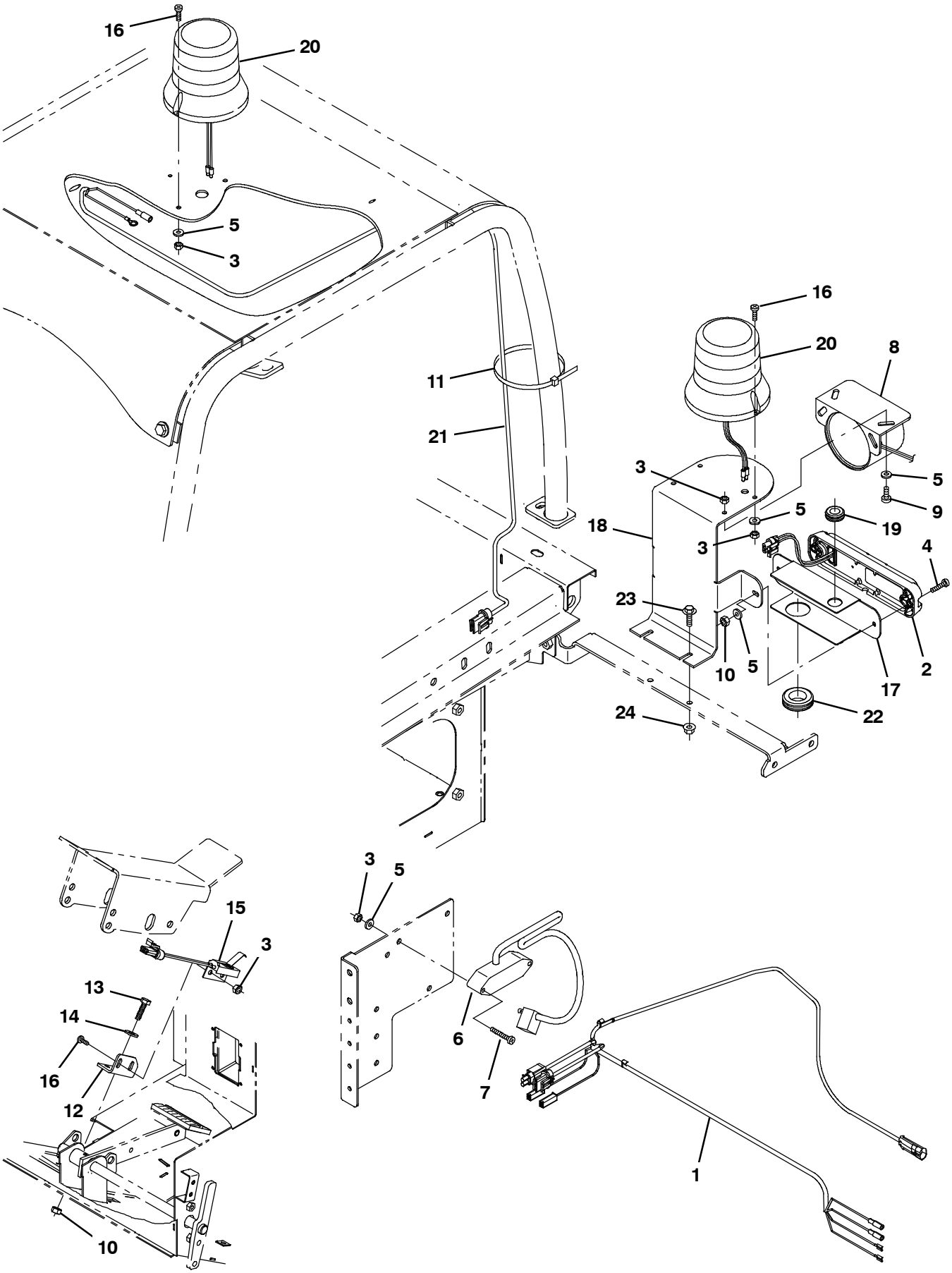

354758

Fig. 2 - Indoor Light Kit (002100-)

	Ref.	Part No.	Serial Number	Description	Qty.
▽		9008199	(002100-)	Light Kit, Inside, Ci [S30]	1
▲	1	1034191	(002100-)	Harness, Backup, Rev [S30]	1
▲	2	1036173	(002100-)	Light, Led, White, 12-24vdc	1
▲	3	06549	(002100-)	Nut, Hex, Lock, M5 X 0.80, Nl	6
▲	4	06935	(002100-)	Screw, Pan, Phl, M5 X 0.80 X 25, 4.8	2
▲	5	19066	(002100-)	Washer, Flat, 10	8
▲	6	9007181	(002100-)	Flasher, 12-80vdc, 2a	1
▲	7	06938	(002100-)	Screw, Pan, Phl, M5 X 0.80 X 40, 4.8	2
▲	8	9007131	(002100-)	Alarm Assy, Backup, 12-24vdc 82-107dba	1
▲	9	09145	(002100-)	Screw, Pan, Phl, M6 X 1.00 X 16, 4.8	2
▲	10	07785	(002100-)	Nut, Hex, Std, M6 X 1.00, Ss	4
▲	11	49266	(002100-)	Tie, Cable, Nyl, 07.3l .19w 1.8 Max D	4
▲	12	1036995	(002100-)	Bracket, Switch, Reverse	1
▲	13	08716	(002100-)	Screw, Hex, M6 X 1.00 X 20, Ss	2
▲	14	32483	(002100-)	Washer, Flat, 0.25, Sae	2
▲	15	1039735	(002100-)	Switch, Snap, 15a No	1
▲	16	06933	(002100-)	Screw, Pan, Phl, M5 X 0.80 X 16, 4.8	4
▲	17	1061203	(002100-)	Bracket, Light	1
▲	18	1061140	(002100-)	Bracket, Alarm, Backup	1
▲	19	10632-9	(002100-)	Grommet, Rbr, 0.63id, F/0.8h, .12 Matl	1
▲▽	20	82200	(002100-)	Light, Flsh, 12vdc, Amb, Rwk	1
▲▲		9000879	(002100-)	Lens, Amb, F/ Strobe / Flasher	1
▲▲		9000846	(002100-)	Lamp, Bulb, Flsh	1
▲▲		1027798	(002100-)	Lens, Red, F/ Strobe / Flasher	1
▲▲		1027800	(002100-)	Lens, Blu, F/ Strobe / Flasher	1
▲	21	1030973	(002100-)	Harness, Ohg [S30]	1
▲	22	10632-14	(002100-)	Grommet, Rbr, 1.00id, F/1.4h, .12 Matl	1
▲	23	1036892	(002100-)	Screw, Hex, M6 X 1.00 X 25, 9.8, Sems	2
▲	24	07790	(002100-)	Nut, Hex, Flng, M6 X 1.00	2

Fig. 3 - Outdoor Light Kit (000000-002099)

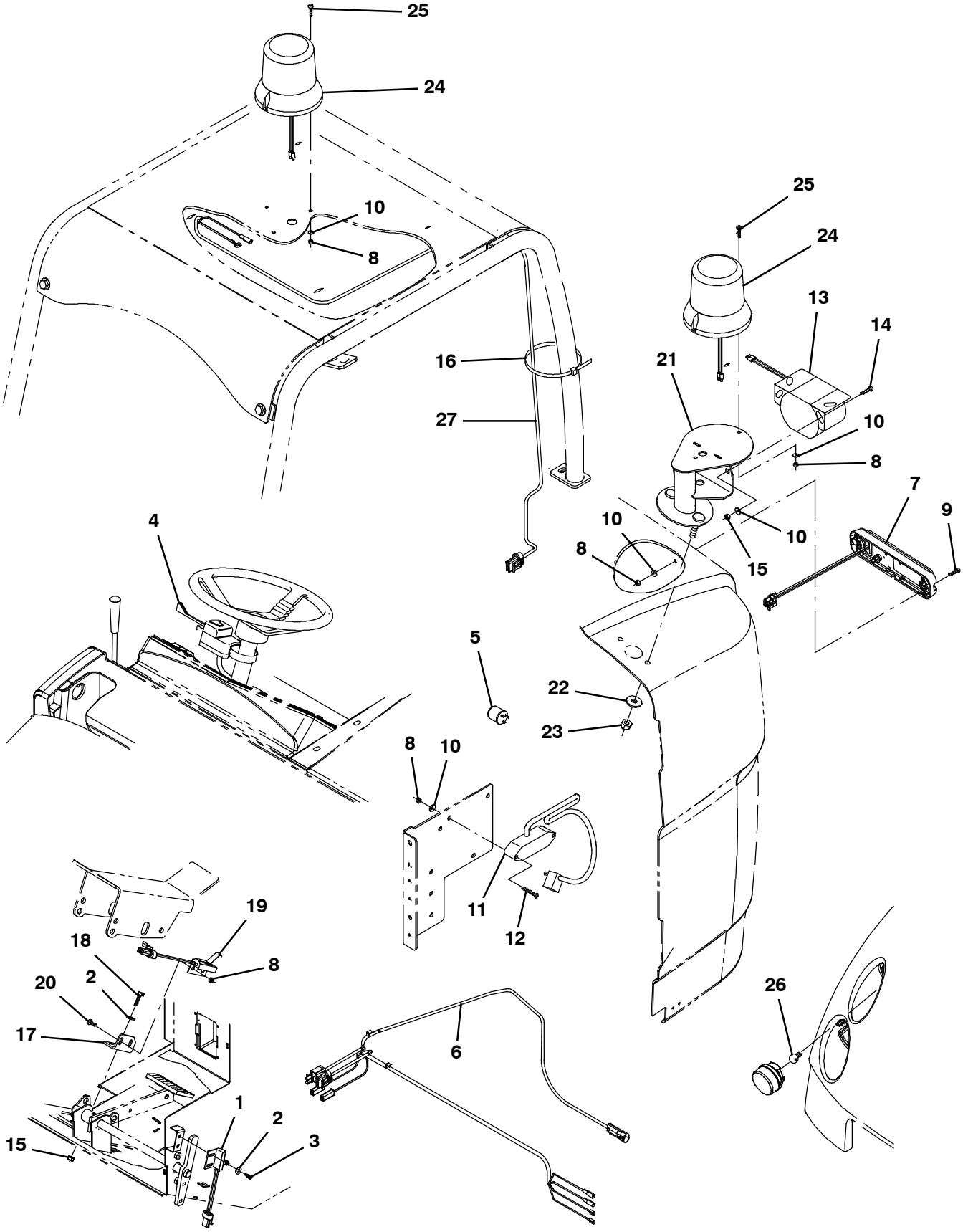

354757

Fig. 3 - Outdoor Light Kit (000000-002099)

	Ref.	Part No.	Serial Number	Description	Qty.
▽		9003805	(000000-002099)	Light Kit, outdoor, Ci [S30]	1
▲	1	1040019	(000000-002099)	Switch, Limit, 15a, Nc	1
▲	2	32483	(000000-002099)	Washer, Flat, 0.25, Sae	4
▲	3	09244	(000000-002099)	Screw, Hex, M5 X 0.80 X 16, 8.8	2
▲	4	60751	(000000-002099)	Switch, Turn Signal	1
▲	5	31922	(000000-002099)	Flasher, Hd, 12vdc 25a [10-57300]	1
▲	6	1034191	(000000-002099)	Harness, Backup, Rev [S30]	1
▲	7	1036173	(000000-002099)	Light, Led, White, 12-24vdc	1
▲	8	06549	(000000-002099)	Nut, Hex, Lock, M5 X 0.80, Nl	8
▲	9	06935	(000000-002099)	Screw, Pan, Phl, M5 X 0.80 X 25, 4.8	2
▲	10	19066	(000000-002099)	Washer, Flat, 10	8
▲	11	1036985	(000000-002099)	Flasher, 12-80vdc, 2a	1
▲	12	06938	(000000-002099)	Screw, Pan, Phl, M5 X 0.80 X 40, 4.8	2
▲	13	9007131	(000000-002099)	Alarm Assy, Backup, 12-24vdc 82-107dba	1
▲	14	09145	(000000-002099)	Screw, Pan, Phl, M6 X 1.00 X 16, 4.8	2
▲	15	07785	(000000-002099)	Nut, Hex, Std, M6 X 1.00, Ss	4
▲	16	49266	(000000-002099)	Tie, Cable, Nyl, 07.3l .19w 1.8 Max D	4
▲	17	1036995	(000000-002099)	Bracket, Switch, Reverse	1
▲	18	08716	(000000-002099)	Screw, Hex, M6 X 1.00 X 20, Ss	2
▲	19	1039735	(000000-002099)	Switch, Snap, 15a No	1
▲	20	06933	(000000-002099)	Screw, Pan, Phl, M5 X 0.80 X 16, 4.8	2
▲	21	1036111	(000000-002099)	Bracket Wldt, Light, Flsh	1
▲	22	13248	(000000-002099)	Washer, Flat, 0.40b 1.12d .12, Stl, Pl	2
▲	23	08714	(000000-002099)	Nut, Hex, Lock, M10 X 1.5, Nl, Ss	2
▲▽	24	83159	(000000-002099)	Light, Strobe, Amb, 12-48vdc, Rwk	1
▲▲		9000879	(000000-002099)	Lens, Amb, F/ Strobe / Flasher	1
▲▲		9000845	(000000-002099)	Lamp, Bulb, Strobe	1
▲▲		1027798	(000000-002099)	Lens, Red, F/ Strobe / Flasher	1
▲▲		1027800	(000000-002099)	Lens, Blu, F/ Strobe / Flasher	1
▲	25	06933	(000000-002099)	Screw, Pan, Phl, M5 X 0.80 X 16, 4.8	2
▲	26	1036183	(000000-002099)	Lamp, Clr, 12vdc [#3157 Series]	2
▲	27	1030973	(000000-002099)	Harness, Ohg [S30]	1

Fig. 4 - Outdoor Light Kit (002100-)

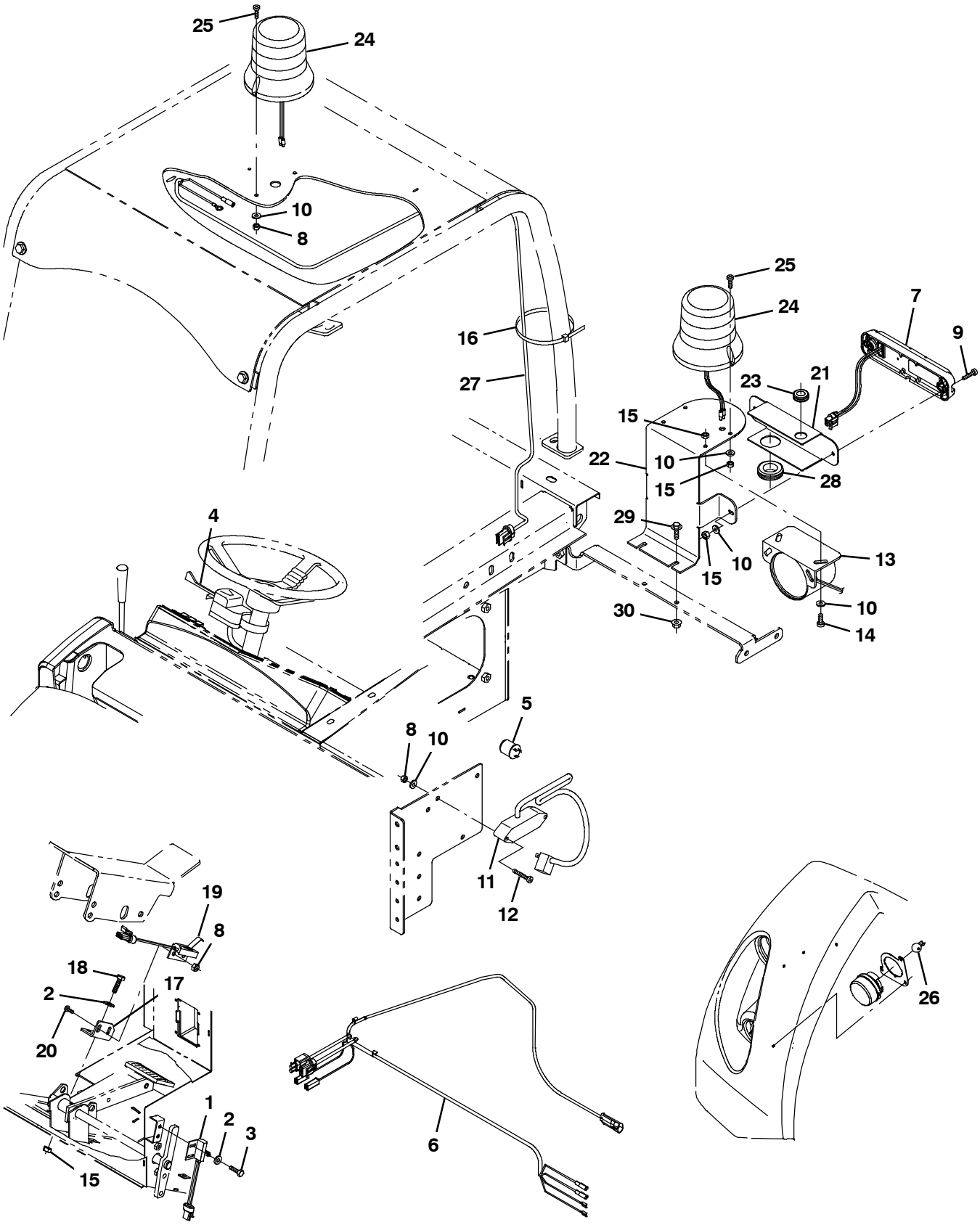

354757

Fig. 4 - Outdoor Light Kit (002100-)

	Ref.	Part No.	Serial Number	Description	Qty.
▽		9008198	(002100-)	Light Kit, outdoor, Ci [S30]	1
▲	1	1040019	(002100-)	Switch, Limit, 15a, Nc	1
▲	2	32483	(002100-)	Washer, Flat, 0.25, Sae	4
▲	3	09244	(002100-)	Screw, Hex, M5 X 0.80 X 16, 8.8	2
▲	4	60751	(002100-)	Switch, Turn Signal	1
▲	5	31922	(002100-)	Flasher, Hd, 12vdc 25a [10-57300]	1
▲	6	1034191	(002100-)	Harness, Backup, Rev [S30]	1
▲	7	1036173	(002100-)	Light, Led, White, 12-24vdc	1
▲	8	06549	(002100-)	Nut, Hex, Lock, M5 X 0.80, Nl	8
▲	9	06935	(002100-)	Screw, Pan, Phl, M5 X 0.80 X 25, 4.8	2
▲	10	19066	(002100-)	Washer, Flat, 10	8
▲	11	1036985	(002100-)	Flasher, 12-80vdc, 2a	1
▲	12	06938	(002100-)	Screw, Pan, Phl, M5 X 0.80 X 40, 4.8	2
▲	13	9007131	(002100-)	Alarm Assy, Backup, 12-24vdc 82-107dba	1
▲	14	09145	(002100-)	Screw, Pan, Phl, M6 X 1.00 X 16, 4.8	2
▲	15	07785	(002100-)	Nut, Hex, Std, M6 X 1.00, Ss	4
▲	16	49266	(002100-)	Tie, Cable, Nyl, 07.3l .19w 1.8 Max D	4
▲	17	1036995	(002100-)	Bracket, Switch, Reverse	1
▲	18	08716	(002100-)	Screw, Hex, M6 X 1.00 X 20, Ss	2
▲	19	1039735	(002100-)	Switch, Snap, 15a No	1
▲	20	06933	(002100-)	Screw, Pan, Phl, M5 X 0.80 X 16, 4.8	2
▲	21	1061203	(002100-)	Bracket, Light	1
▲	22	1061140	(002100-)	Bracket, Alarm, Backup	1
▲	23	10632-9	(002100-)	Grommet, Rbr, 0.63id, F/0.8h, .12 Matl	1
▲▽	24	83159	(002100-)	Light, Strobe, Amb, 12-48vdc, Rwk	1
▲▲		9000879	(002100-)	Lens, Amb, F/ Strobe / Flasher	1
▲▲		9000845	(002100-)	Lamp, Bulb, Strobe	1
▲▲		1027798	(002100-)	Lens, Red, F/ Strobe / Flasher	1
▲▲		1027800	(002100-)	Lens, Blu, F/ Strobe / Flasher	1
▲	25	06933	(002100-)	Screw, Pan, Phl, M5 X 0.80 X 16, 4.8	2
▲	26	1036183	(002100-)	Lamp, Clr, 12vdc [#3157 Series]	2
▲	27	1030973	(002100-)	Harness, Ohg [S30]	1
▲	28	10632-14	(002100-)	Grommet, Rbr, 1.00id, F/1.4h, .12 Matl	1
▲	29	1036892	(002100-)	Screw, Hex, M6 X 1.00 X 25, 9.8, Sems	2
▲	30	07790	(002100-)	Nut, Hex, Flng, M6 X 1.00	2

Fig. 5 - Left Hand Side Brush Kit, S30 XP and X4

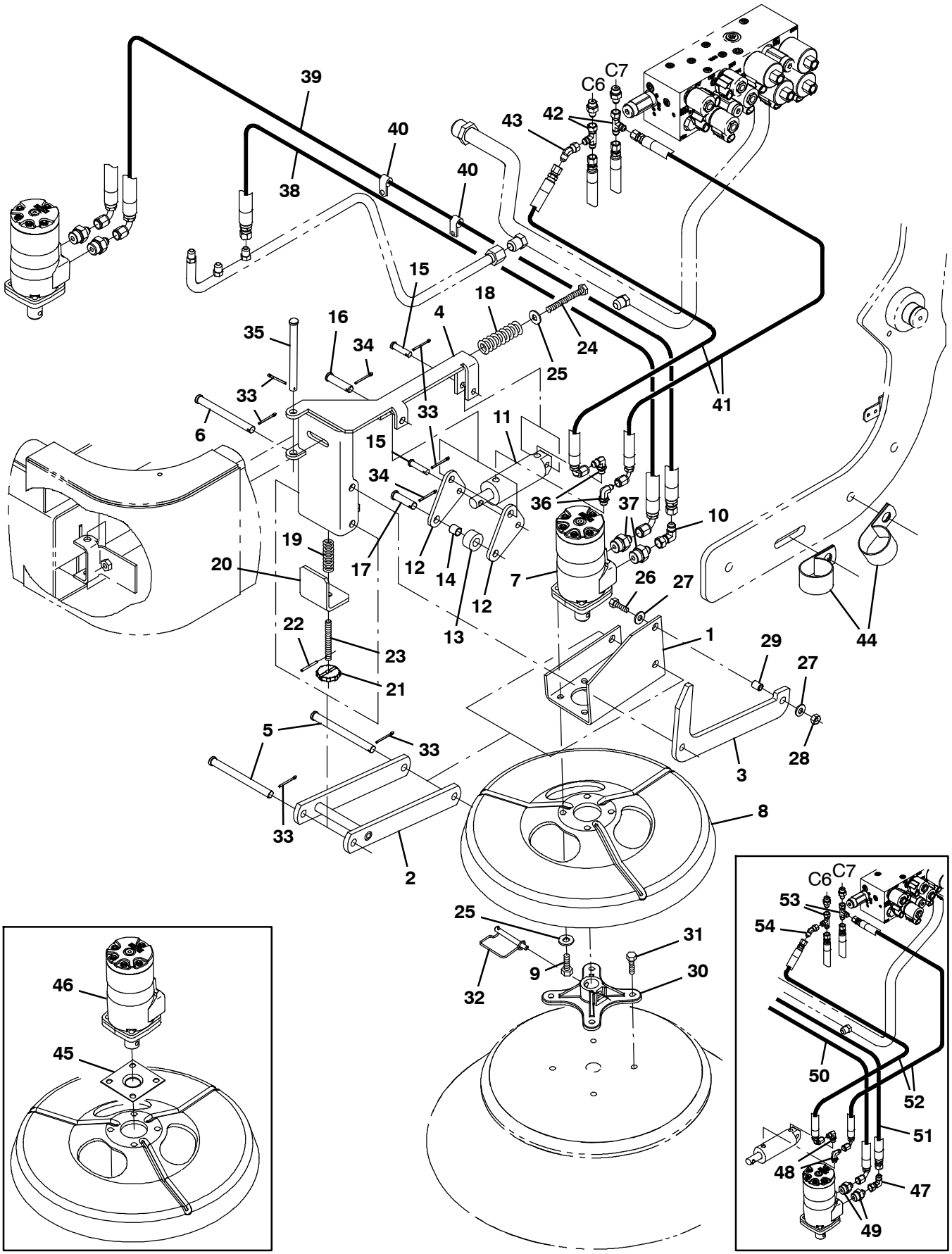

354739

Fig. 5 - Left Hand Side Brush Kit, S30 XP and X4

	Ref.	Part No.	Serial Number	Description	Qty.
▽		9004070	(000000-)	Side Brush Kit, Lh, Ci [S30]	1
▲	1	1031916	(000000-)	Bracket, Mtg, Motor, Side Brush	1
▲	2	1029682	(000000-)	Arm Wldt, Brush, Side	1
▲	3	1026459	(000000-)	Arm, Linkage, Side Brush	1
▲	4	1039649	(000000-)	Pivot Wldt, Brush, Side	1
▲	5	51225	(000000-)	Pin, Clevis, 0.50d X 5.50l	2
▲	6	51538	(000000-)	Pin, Clevis, 0.50d X 5.00l	1
▲	7	1057338	(002134-)	Motor, Hyd, Gear, Int 17.9 Bi-Dir 2500	1
▲	8	1054256	(000000-)	Guard, Brush	1
▲	9	46559	(000000-)	Screw, Hex, .38-16 X 1.25, Nl	4
▲	10	313552	(003000-)	Fitting, Hyd, E90, Ff06/Fm06	1
▲	11	1041034	(000000-)	Cylinder, Hyd, 1.5b 06.3l 01.50strk 2500	1
▲	12	1026462	(000000-)	Lever, Lift, Brush	2
▲	13	1026525	(000000-)	Tube, 0.59id 1.25od 00.6l, Stl	1
▲	14	59634	(000000-)	Bushing, Sleeve, 0.50b 0.59d 0.62l, Fgl	1
▲	15	29558	(000000-)	Pin, Clevis, 0.37d X 1.50l	2
▲	16	51534	(000000-)	Pin, Clevis, 0.50d X 2.00l	1
▲	17	43290	(000000-)	Pin, Clevis, 0.50d X 1.75l	1
▲	18	45261	(000000-)	Spring, Cmpr, 0.97od .11wir 02.5l	1
▲	19	22290	(000000-)	Spring, Cmpr, 0.72od .06wir 02.3l	1
▲	20	1036333	(000000-)	Angle	1
▲	21	1039141	(000000-)	Knob	1
▲	22	13865	(000000-)	Pin, Roll, .125d X 1.25l, .125/.129	1
▲	23	1039199	(000000-)	Rod, Thrd, M10x1.5 80l	1
▲	24	06965	(000000-)	Screw, Hex, M10 X 1.5 X 80, 8.8	1
▲	25	32492	(000000-)	Washer, Flat, 0.38, Std	5
▲	26	76570	(000000-)	Screw, Hex, M8 X 1.25 X 30, 8.8	1
▲	27	32491	(000000-)	Washer, Flat, 0.31, Std	2
▲	28	08709	(000000-)	Nut, Hex, Lock, M8 X 1.25, Nl	1
▲	29	80395	(000000-)	Sleeve, P/M, 0.31b 0.50d 0.7l [430ss]	1
▲	30	47501	(000000-)	Hub, Adapter, Brush, 1.00b	1
▲	31	39394	(000000-)	Screw, Hex, .31-09 X 1.25, Wood	4
▲	32	84581	(000000-)	Pin Assy, Side Brush W/ Clip	1
▲	33	08182	(000000-)	Pin, Cotter, .125 X 1.00	6
▲	34	39005	(000000-)	Pin, Cotter, .094 X 0.75	2
▲	35	222196	(000000-)	Pin, Clevis, 0.50d X 4.25l	1
▲	36	762427	(003000-)	Fitting, Hyd, E90, Fm04/Om04	2
▲	37	762439	(003000-)	Fitting, Hyd, Str, Fm06/Om10	2
▲	38	1067661	(003000-)	Hose, Hyd, Tc06, Ff06e90/Ff06str, 102.0	1
▲	39	1067662	(003000-)	Hose, Hyd, Tc08, Ff06e90/Ff06str, 120.0	1
▲	40	30407	(000000-)	Clip, Keeper, Open	2
▲	41	1067088	(003000-)	Hose, Hyd, Tc04, Ff04e90/Ff04str, 126.0	2
▲	42	767422	(003000-)	Fitting, Hyd, Tee, Ff04/Fm04/Fm04, Run	2
▲	43	1011123	(003000-)	Fitting, Hyd, E45, Ff04/Fm04	1
▲	44	53468	(000000-)	Clamp, Cable, Stl, 1.75d X 1.00w, 1hole	2
	45	16082	(000000-002133)	Guard, String, Motor, Brush	1
	46	379607	(000000-002133)	Motor, Hyd, Gear, Int 17.9 Bi-Dir 1500 (See Breakdowns)	1
	47	47504	(000000-002999)	Fitting, Hyd, E90, Jf06/Jm06	1
	48	77097	(000000-002999)	Fitting, Hyd, E90, Jm04/Om04	2

Fig. 5 - Left Hand Side Brush Kit, S30 XP and X4

Ref.	Part No.	Serial Number	Description	Qty.
49	47508	(000000-002999)	Fitting, Hyd, Str, Jm06/Om10	2
50	396217	(000000-002999)	Hose, Hyd, Tc06, Jf06e90/Jf06str, 102.0	1
51	1043049	(000000-002999)	Hose, Hyd, Tc08, Jf06e90/Jf06str, 120.0	1
52	1036201	(000000-002999)	Hose, Hyd, Tc04, Jf04e90/Jf04str, 126.0	2
53	57988	(000000-002999)	Fitting, Hyd, Tee, Jf04/Jm04/Jm04, Run	2
54	68441	(000000-002999)	Fitting, Hyd, E45, Jf04/Jm04	1

Fig. 6 - Vacuum Wand Group

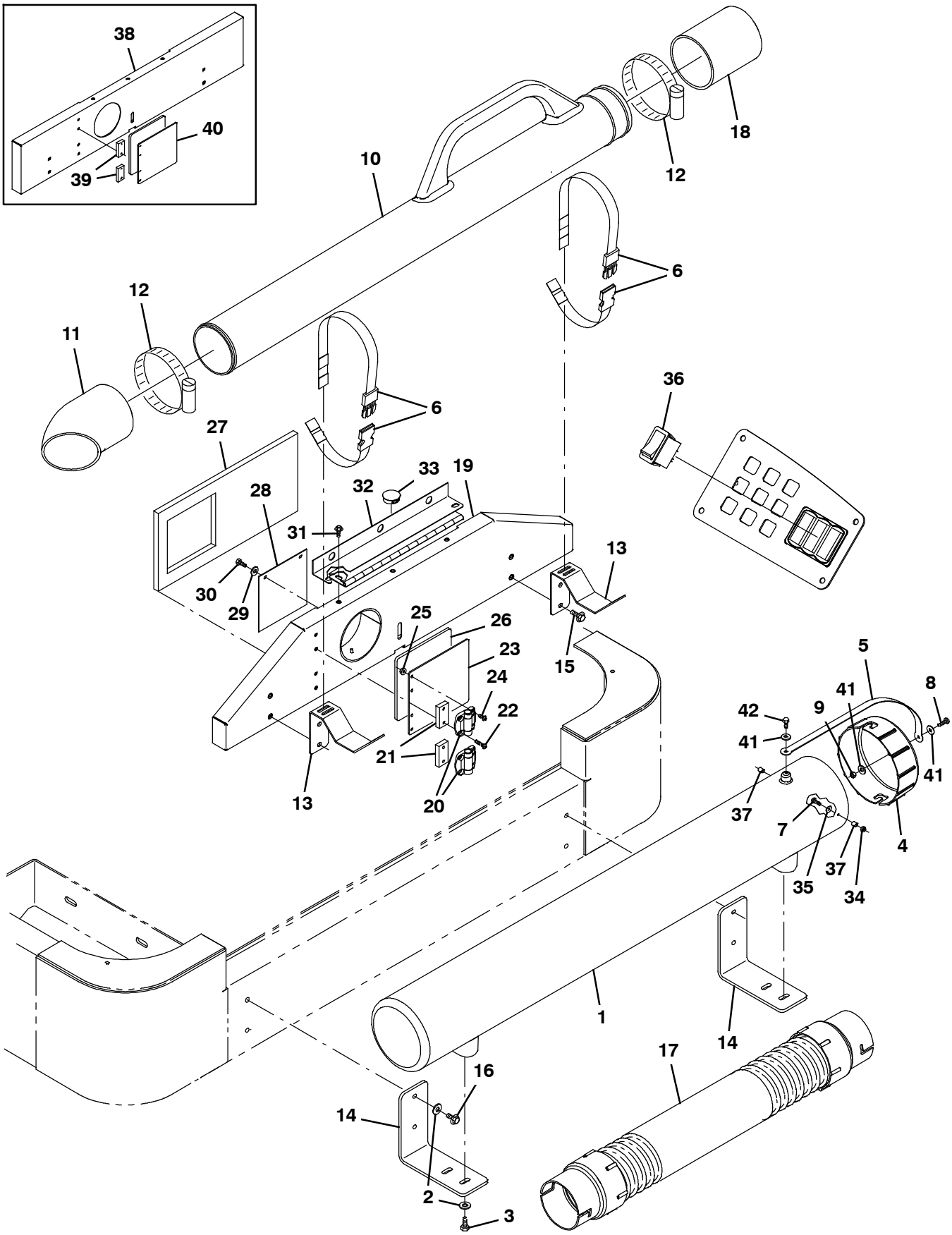

354742

Fig. 6 - Vacuum Wand Group

	Ref.	Part No.	Serial Number	Description	Qty.
	1	1032752	(000000-)	Tube, Hose	1
	2	32491	(000000-)	Washer, Flat, 0.31, Std	8
	3	16931	(000000-)	Screw, Hex, M8 X 1.25 X 20, 8.8	4
	4	1041473	(000000-)	Cap, Enclosure, Hose	1
	5	1041754	(000000-)	Strap, Cap, Enclosure	1
	6	367974	(000000-)	Strap, Pyp, 0.07 1.0w 18.5l, W/ Buckle	2
	7	06934	(000000-)	Screw, Pan, Phl, M5 X 0.80 X 20, 4.8	1
	8	09164	(000000-)	Screw, Pan, M6 X 1.00 X 20, 4.8	1
	9	08708	(000000-)	Nut, Hex, Lock, M6 X 1.00, Nl	1
	10	1032584	(000000-)	Wand, Vacuum	1
	11	1032707	(000000-)	Hose, Nozzle, Floor	1
	12	79380	(000000-)	Clamp, Hose, Wormdrive, 3.75-4.62d, .62w	2
	13	1047015	(000000-)	Bracket, Mtg, Wand	2
	14	1046993	(000000-)	Bracket, Mtg, Tube	2
	15	1020341	(000000-)	Screw, Hex, M8 X 1.25 X 20, Ss, Sems	8
	16	763045	(000000-)	Screw, Hex, M8 X 1.25 X 20, Fmg	4
	17	1042718	(000000-)	Hose Assy, W/2cuff, 4.0d 156l 4.0/4.0	1
	18	1041882	(000000-)	Hose, Rbr	1
▽		314427	(002100-)	Door Assy, Hppr, Vac Wand	1
▲	19	314421	(002100-)	Door Wldt, Hppr	1
▲	20	367950	(000000-)	Hinge, .40pin 2.2w 02.0l, 4/0.21h	2
▲	21	314432	(002100-)	Block, Spacer, Hinge	2
▲	22	06935	(000000-)	Screw, Pan, M5 X 0.80 X 25, 4.8	4
▲	23	314428	(002100-)	Door, Vacuum	1
▲	24	06932	(000000-)	Screw, Pan, Phl, M5 X 0.80 X 10, 4.8	4
▲	25	07789	(000000-)	Nut, Hex, Flng, M5 X 0.80	4
▲	26	1039007	(000000-)	Seal, Celr Rbr, .25, 06.0w 06.0l, Adh	1
▲	27	1035660	(000000-)	Gasket, Ure, .50, 07.47w, 15.47l, Adh	1
▲	28	1039038	(000000-)	Flap, Wand, Vacuum	1
▲	29	32490	(000000-)	Washer, Flat, 0.25, Std	2
▲	30	06942	(000000-)	Screw, Hex, M6 X 1.0 X 16, 8.8	2
▲	31	1040467	(002100-)	Screw, Hex, M6 X 1.00 X 20, 9.8, Sems	2
▲	32	1032545	(002100-)	Hinge Wldt	1
▲	33	76888	(002100-)	Plug, Hole, Rnd, 1.25h .03-.12, Blk Nyl	1
	34	06549	(000000-)	Nut, Hex, Lock, M5 X 0.80, Nl	2
	35	19066	(000000-)	Washer, Flat, 10	2
	36	397889	(000000-)	Switch, Rocker, Dpst, On / None / On (S30 Only)	1
	37	610943	(000000-)	Sleeve, P/M, 0.21b 0.32d 0.4l, Stl Pl	2
	38	1039067	(000000-002099)	Door Wldt, Vacuum	1
	39	1039020	(000000-002099)	Block, Spacer, Hinge	2
	40	1039008	(000000-002099)	Door, Vacuum	1
	41	32490	(000000-)	Washer, Flat, 0.25, Std	3
	42	06942	(000000-)	Screw, Hex, M6 X 1.00 X 16, 8.8	1

Fig. 7 - Blower Wand Group

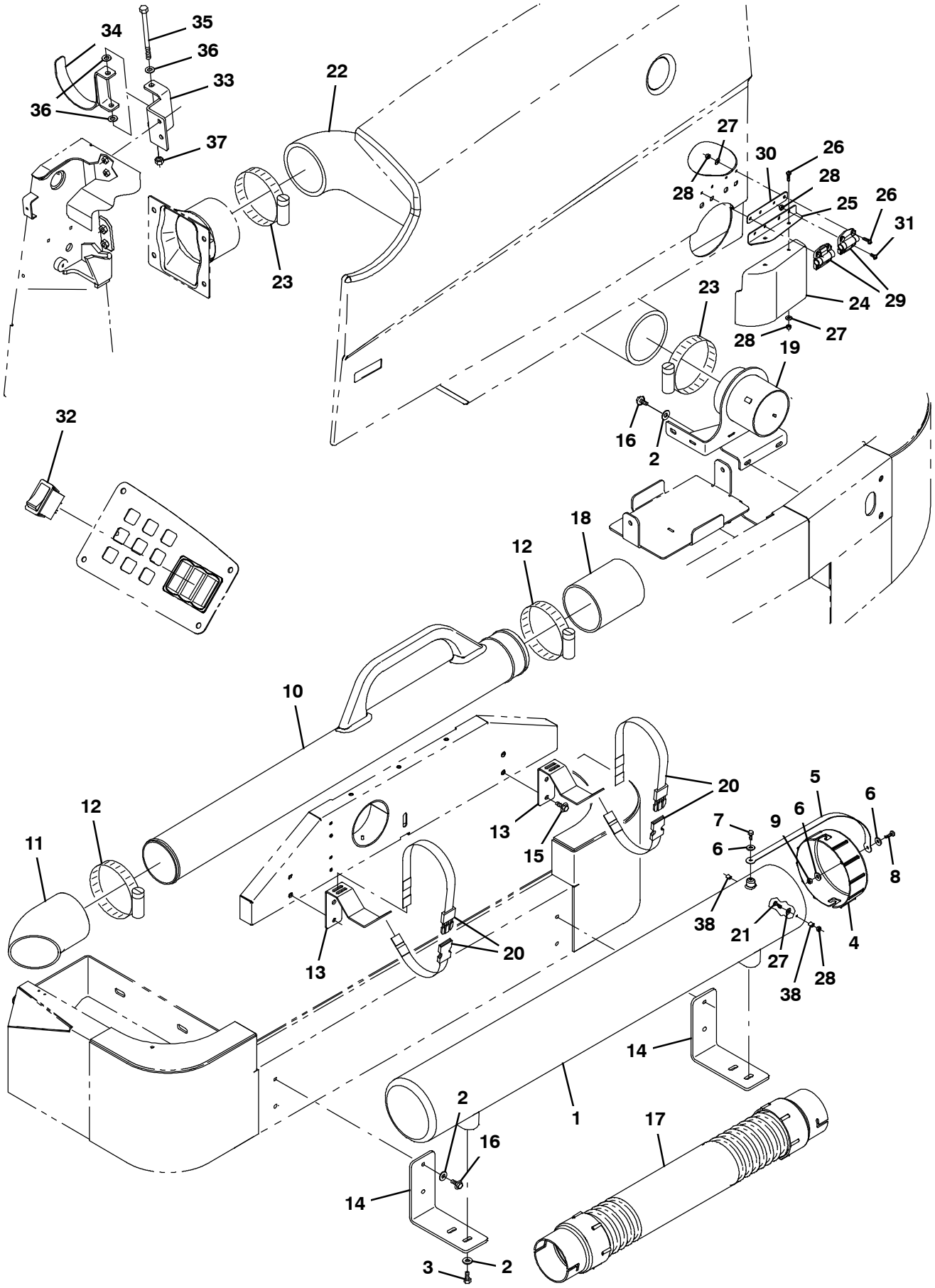

354744

Fig. 7 - Blower Wand Group

Ref.	Part No.	Serial Number	Description	Qty.
1	1032752	(000000-)	Tube, Hose	1
2	32491	(000000-)	Washer, Flat, 0.31, Std	11
3	16931	(000000-)	Screw, Hex, M8 X 1.25 X 20, 8.8	4
4	1041473	(000000-)	Cap, Enclosure, Hose	1
5	1041754	(000000-)	Strap, Cap, Enclosure	1
6	32490	(000000-)	Washer, Flat, 0.25, Std	3
7	06942	(000000-)	Screw, Hex, M6 X 1.0 X 16, 8.8	1
8	09164	(000000-)	Screw, Pan, M6 X 1.00 X 20, 4.8	1
9	08708	(000000-)	Nut, Hex, Lock, M6 X 1.00, Nl	1
10	1032584	(000000-)	Wand, Vacuum	1
11	1032707	(000000-)	Hose, Nozzle, Floor	1
12	79380	(000000-)	Clamp, Hose, Wormdrive, 3.75-4.62d, .62w	2
13	1047015	(000000-)	Bracket, Mtg, Wand	2
14	1046993	(000000-)	Bracket, Mtg, Tube	2
15	1020341	(000000-)	Screw, Hex, M8 X 1.25 X 20, Ss, Sems	4
16	763045	(000000-)	Screw, Hex, M8 X 1.25 X 20, Fmg	7
17	1042718	(000000-)	Hose Assy, W/2cuff, 4.0d 156l 4.0/4.0	1
18	1041882	(000000-)	Hose, Rbr	1
19	1041925	(000000-)	Tube Wldt, Door	1
20	367974	(000000-)	Strap, Pyp, 0.07 1.0w 18.5l, W/ Buckle	2
21	06934	(000000-)	Screw, Pan, Phl, M5 X 0.80 X 20, 4.8	2
22	1042831	(000000-)	Hose, Exhaust, Vacuum, 5.0id, 40.0l	1
23	367718	(000000-)	Clamp, Bridge, 5.0	2
24	1042493	(000000-)	Deflector, Air	1
25	1042511	(000000-)	Bracket, Mtg, Air Deflector	1
26	06933	(000000-)	Screw, Pan, M5 X 0.80 X 16, 4.8	6
27	19066	(000000-)	Washer, Flat, #10	8
28	06549	(000000-)	Nut, Hex, Lock, M5 X 0.80, Nl	12
29	1042868	(000000-)	Hinge, .40pin 2.2w 02.0l, 4/0.21h	2
30	1042518	(000000-)	Spacer, Hinge	1
31	09200	(000000-)	Screw, Pan, M5 X 0.8 X 12, Ss	4
32	397889	(000000-)	Switch, Rocker, Dpst, On / None / On (S30 Only)	1
33	1041944	(000000-)	Bracket, Hinge	1
34	1042661	(000000-)	Bracket Wldt, Wand	1
35	07819	(000000-)	Screw, Hex, M10 X 1.5 X 130, 8.8	1
36	52296	(000000-)	Washer, Flat, 0.40b 0.81d .06, Nyl	3
37	41430	(000000-)	Nut, Hex, Lock, M10 X 1.5, Nl	1
38	610943	(000000-)	Sleeve, P/M, 0.21b 0.32d 0.4l, Stl Pl	2

Fig. 8 - Overhead Guard Kit (000000-002099)

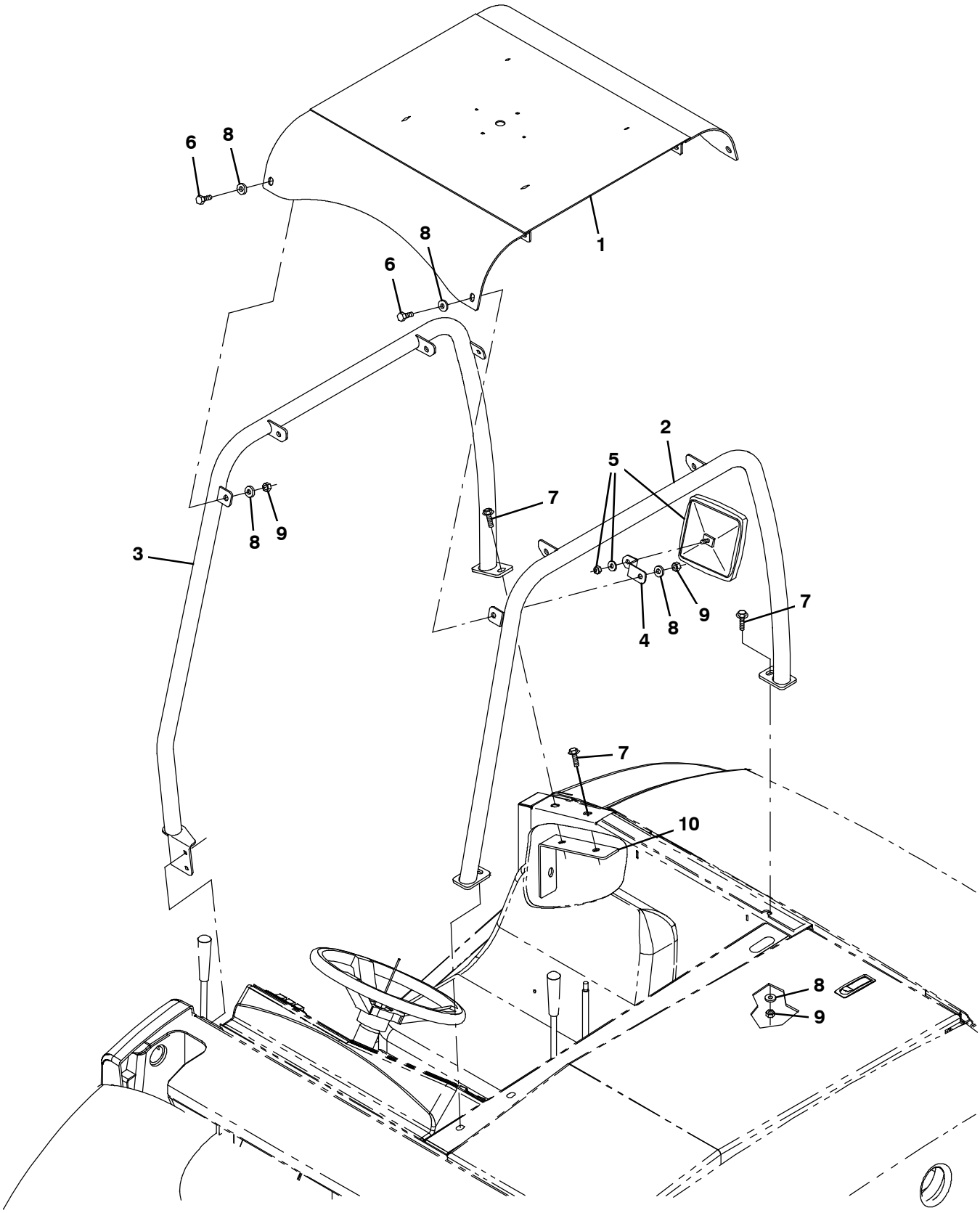

354736

Fig. 8 - Overhead Guard Kit (000000-002099)

	Ref.	Part No.	Serial Number	Description	Qty.
▽		9003635	(000000-002099)	Ohg Kit, Ci [S30]	1
▲	1	1032262	(000000-002099)	Guard Wldt, Ohg, Top	1
▲	2	1032067	(000000-002099)	Leg Wldt, Guard, Lh	1
▲	3	1032069	(000000-002099)	Leg Wldt, Guard, Rh	1
▲	4	1032722	(000000-002099)	Bracket, Mtg, Mirror	1
▲	5	49034	(000000-002099)	Mirror, Convex, 06.7 X 06.2	1
▲	6	39283	(000000-002099)	Screw, Hex, M10 X 1.5 X 25, 8.8	8
▲	7	1037358	(000000-002099)	Screw, Hex, M10 X 1.50 X 35, 9.8, Sems	3
▲	8	32492	(000000-002099)	Washer, Flat, 0.38, Std	17
▲	9	41430	(000000-002099)	Nut, Hex, Lock, M10 X 1.5, Nl	9
▲	10	1045101	(000000-002099)	Bracket, Sppt, Ohg	1

Fig. 9 - Overhead Guard Kit (002100-)

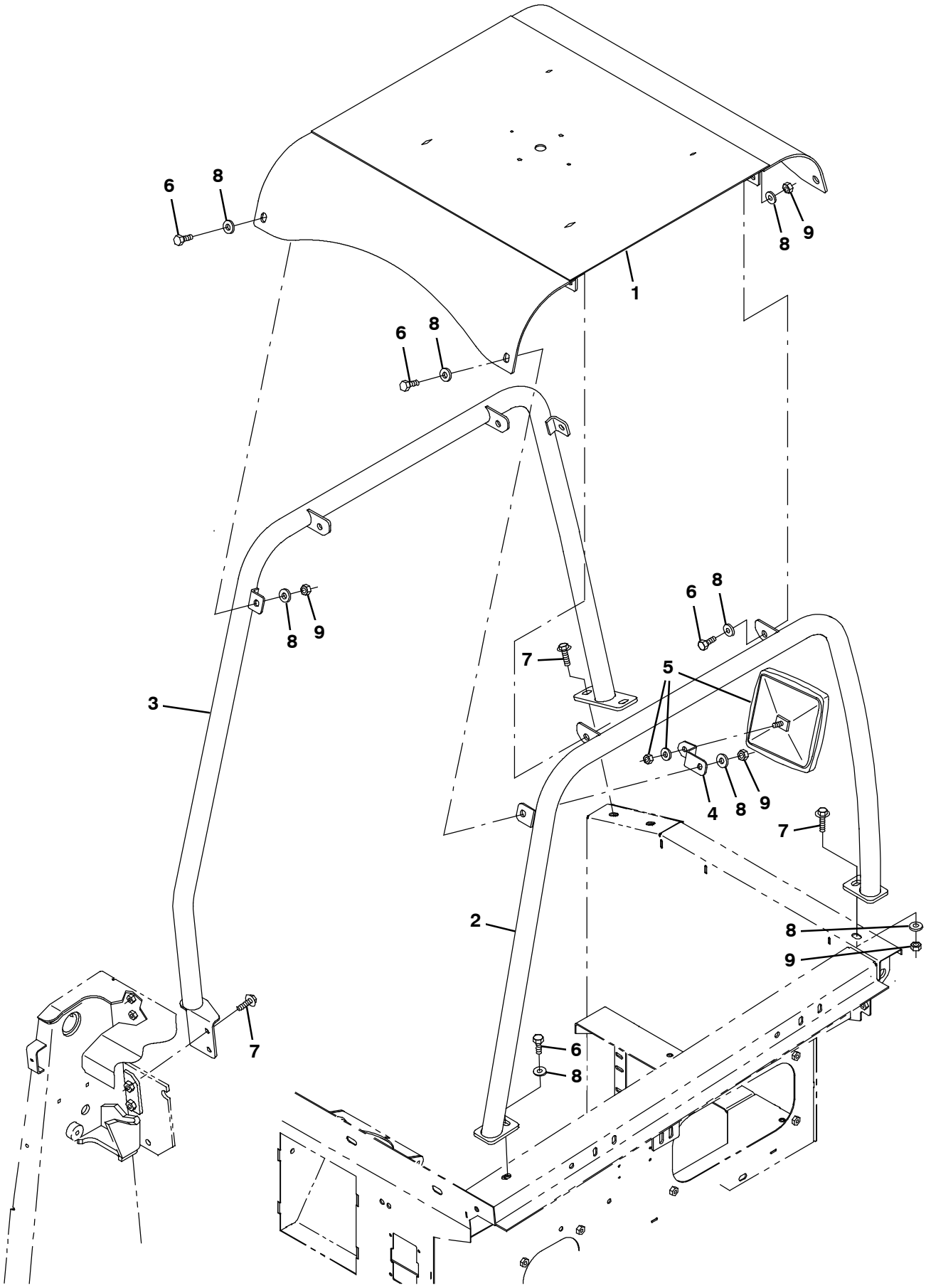

354736

Fig. 9 - Overhead Guard Kit (002100-)

	Ref.	Part No.	Serial Number	Description	Qty.
▽		9008200	(002100-)	Ohg Kit, Ci [S30]	1
▲	1	1032262	(002100-)	Guard Wldt, Ohg, Top	1
▲	2	1032067	(002100-)	Leg Wldt, Guard, Lh	1
▲	3	1061016	(002100-)	Leg Wldt, Guard, Rh	1
▲	4	1032722	(002100-)	Bracket, Mtg, Mirror	1
▲	5	49034	(002100-)	Mirror, Convex, 06.7 X 06.2	1
▲	6	39283	(002100-)	Screw, Hex, M10 X 1.5 X 25, 8.8	8
▲	7	1037358	(002100-)	Screw, Hex, M10 X 1.50 X 35, 9.8, Sems	5
▲	8	32492	(002100-)	Washer, Flat, 0.38, Std	17
▲	9	41430	(002100-)	Nut, Hex, Lock, M10 X 1.5, Nl	9

Fig. 10 - Cab Group

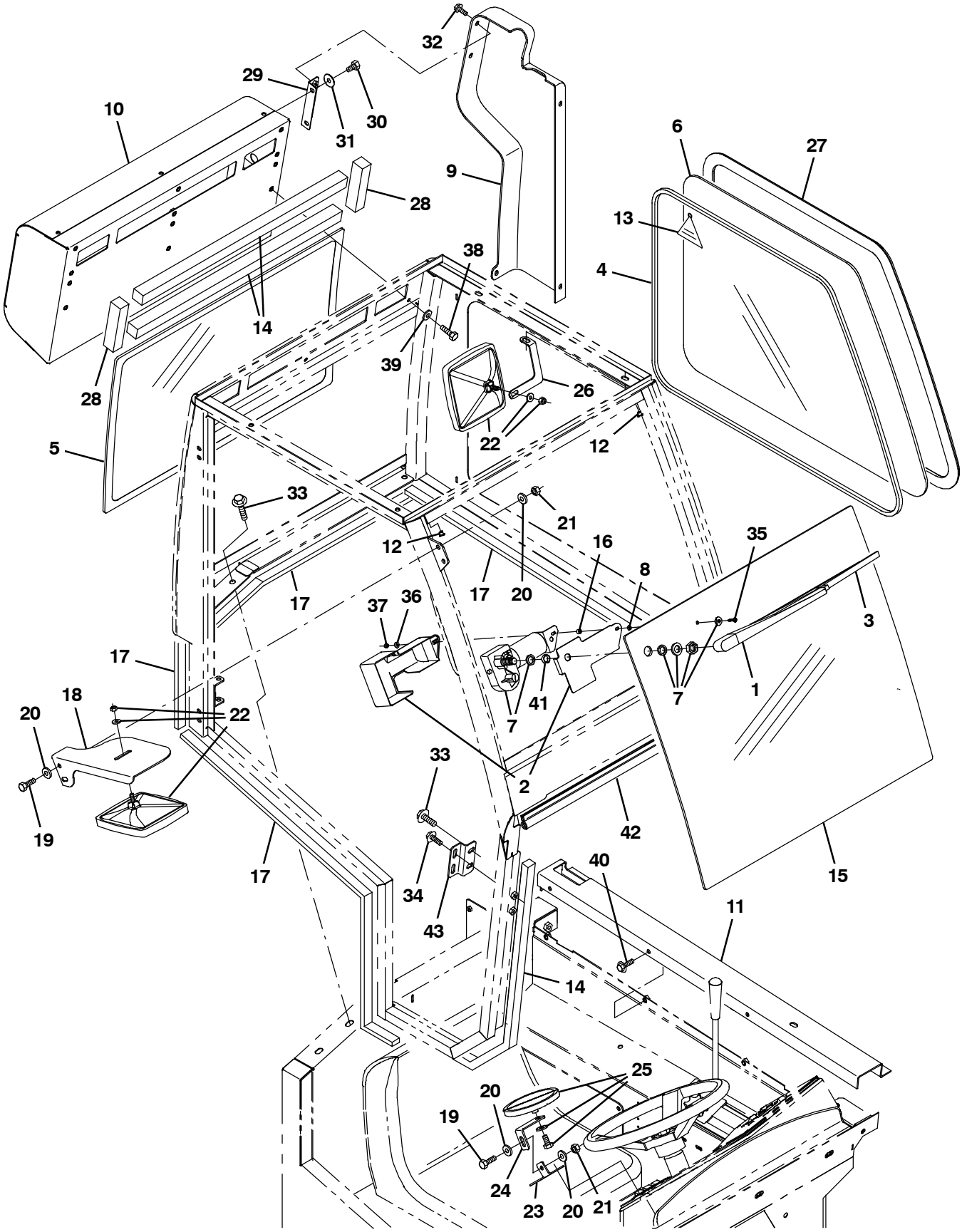

354755

Fig. 10 - Cab Group

Ref.	Part No.	Serial Number	Description	Qty.
1	1062083	(000000–)	Arm, Wiper, Windshield	1
2	1067891	(000000–)	Plate, Motor, Wiper, Cab	1
3	1062084	(000000–)	Blade, Wiper, Windshield	1
4	9009219	(000000–)	Seal, Afmkt, Rbr, Wndw, 10ft [Zipper]	1
5	1067875	(000000–)	Pane, Glass, Wndw, Rear	1
6	1067874	(000000–)	Pane, Glass, Wndw, Lh Side, Cab	1
7	1067872	(000000–)	Motor, Wiper, Cab	1
8	76426	(000000–)	Washer, Sealing, 0.28b 0.75d Ss, Neo	1
9	1067869	(000000–)	Cover, Hose, Plstc, Cab	1
10	1067918	(000000–)	Heater Unit, W/ A/C & Fan	1
11	1060586	(000000–)	Lip Wldt, Oprtr Station / Cab	1
12	80061	(000000–)	Plug, Hole, Rnd, 0.30h 0.3l	2
13	1067911	(000000–)	Label, Info [Exit]	1
14	1069688	(000000–)	Seal, Afmkt, Foam, 1.18 X 1.18, 03ft	2
15	1067878	(000000–)	Pane, Glass, Wndw, Front	1
16	1069211	(000000–)	Spacer, Plstc, 0.18b 0.27d 0.27l	1
17	1069681	(000000–)	Seal, Foam, .50, 1.00w 72.00l, Adh	1
18	1049061	(000000–)	Bracket, Mtg, Mirror	1
19	09740	(000000–)	Screw, Hex, M8 X 1.25 X 20, Ss	3
20	39349	(000000–)	Washer, Flat, 0.31, Sae	6
21	08713	(000000–)	Nut, Hex, Lock, M8 X 1.25, Nl, Ss	3
22	49034	(000000–)	Mirror, Convex, 06.7 X 06.2	2
23	1048740	(000000–)	Bracket, Mtg, Mirror, Lower	1
24	1049017	(000000–)	Bracket, Mtg, Mirror, Upper	1
25	1050295	(000000–)	Mirror, Convex, 0.50d	1
26	1048743	(000000–)	Bracket, Mtg, Mirror	1
27	9009218	(000000–)	Seal, Afmkt, Rbr, Wndw, 10ft	1
28	1069687	(000000–)	Seal, Afmkt, Foam, 1.18 X 1.18, 01ft	2
29	1066952	(000000–)	Bracket, Mtg, Cover	1
30	16735	(000000–)	Screw, Hex, M8 X 1.25 X 16, 8.8	2
31	1069326	(000000–)	Washer, Flat, 0.31, Sae, Blk	2
32	1040467	(000000–)	Screw, Hex, M6 X 1.00 X 20, 9.8, Sems	5
33	1037358	(000000–)	Screw, Hex, M10 X 1.50 X 35, 9.8, Sems	6
34	1037346	(000000–)	Screw, Hex, M8 X 1.25 X 25, 9.8, Sems	2
35	1069316	(000000–)	Screw, Pan, Phl, M4 X 0.70 X 20, Blk	1
36	1059252	(000000–)	Washer, Flat, 0.19b 0.50d .03, Stl, Blk	2
37	02850	(000000–)	Nut, Hex, Lock, M4 X 0.70, Nl	1
38	39277	(000000–)	Screw, Hex, M8 X 1.25 X 25, 8.8	6
39	32491	(000000–)	Washer, Flat, 0.31, Std	6
40	1037346	(000000–)	Screw, Hex, M8 X 1.25 X 25, 9.8, Sems	3
41	1069210	(000000–)	Spacer, Plstc, 0.62b 0.75d 0.27l	1
42	1031616	(000000–)	Seal, Afmkt, Bulb, Str, .75d F/07ga 03ft	1
43	1069232	(000000–)	Bracket, Mtg, Cab	1

Fig. 11 - Cab Cover Group

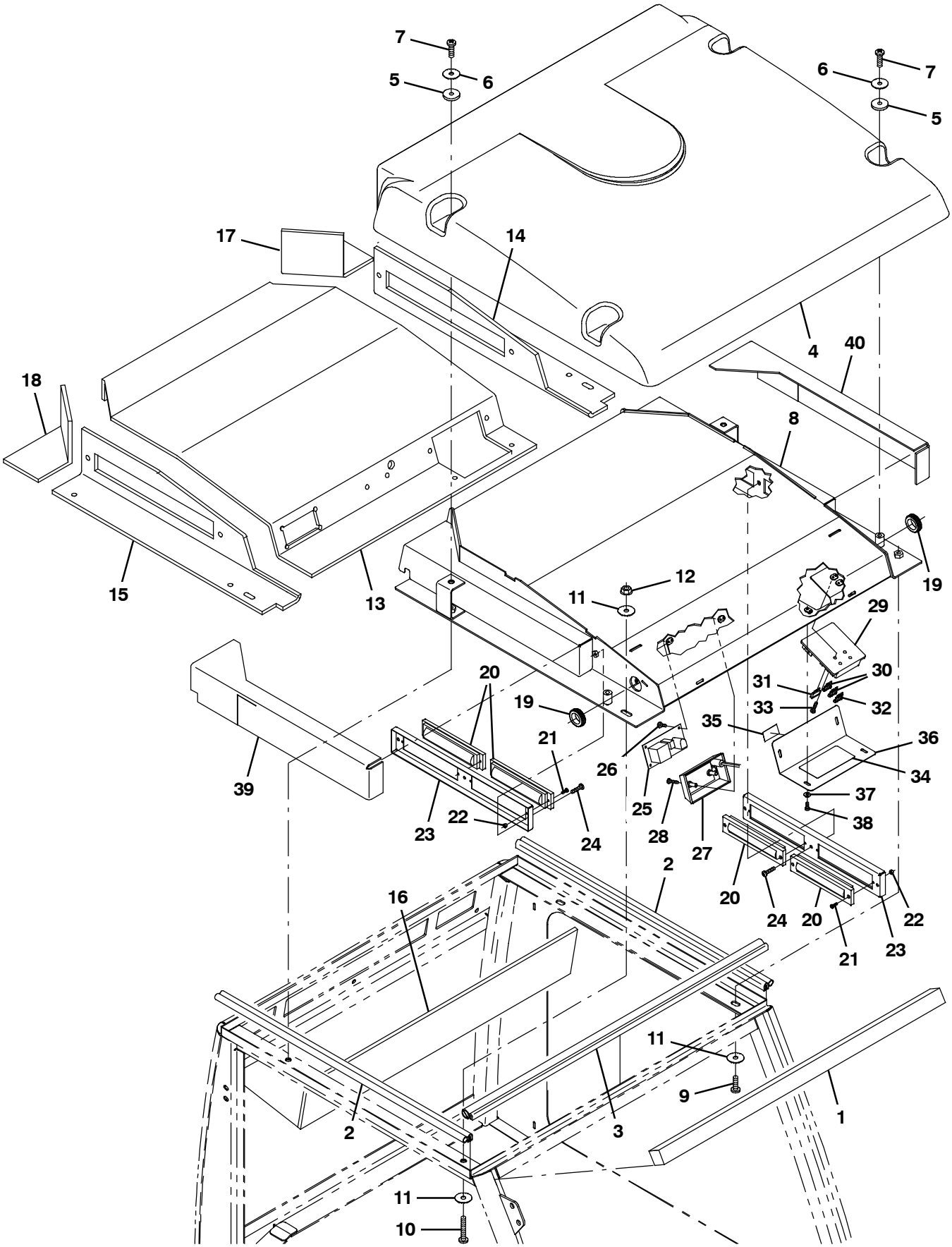

354754

Fig. 11 - Cab Cover Group

Ref.	Part No.	Serial Number	Description	Qty.
1	1069688	(000000–)	Seal, Afmkt, Foam, 1.18 X 1.18, 03ft	1
2	1031207	(000000–)	Seal, Afmkt, Bulb, 90, 0.50d, 03ft	2
3	1030592	(000000–)	Seal, Afmkt, Bulb, 90, 0.75d F/11ga 03ft	1
4	1067873	(000000–)	Panel, Roof, Plstc, Cab	1
5	1067887	(000000–)	Washer, Cab, Shld, Glass	4
6	1069326	(000000–)	Washer, Flat, 0.31, Sae, Blk	4
7	1069310	(000000–)	Screw, Pan, Phl, M8 X 1.25 X 25, Blk	4
8	1067217	(000000–)	Panel Wldt, Top, Cab	1
9	1069310	(000000–)	Screw, Pan, Phl, M8 X 1.25 X 25, Blk	2
10	1069201	(000000–)	Screw, Pan, Phl, M8 X 1.25 X 50, Blk	2
11	1060648	(000000–)	Washer, Flat, 0.31b 0.67d .07, Stl, Blk	5
12	07791	(000000–)	Nut, Hex, Flng, M8 X 1.25	1
13	1068687	(000000–)	Insulation, Sound, Liner, Top	1
14	1068690	(000000–)	Insulation, Sound, Liner, Lh	1
15	1068689	(000000–)	Insulation, Sound, Liner, Rh	1
16	1068688	(000000–)	Insulation, Sound, Liner	1
17	1069229	(000000–)	Insulation, Sound, Liner, Side, Lh	1
18	1069231	(000000–)	Insulation, Sound, Liner, Side, Rh	1
19	10632	(000000–)	Grommet, Rbr, 0.89id, F/1.2h, .14 Matl	2
20	1067909	(000000–)	Louver, Rt, Roll	4
21	1069314	(000000–)	Screw, Pan, Phl, M3 X 0.50 X 12, Blk	8
22	01754	(000000–)	Nut, Hex, Std, M3 X 0	8
23	1066933	(000000–)	Plate, Vent	2
24	1069318	(000000–)	Screw, Pan, Phl, M5 X 0.80 X 25, Blk	6
25	1068751	(000000–)	Controls, Ac/Heater [S30]	1
26	1069315	(000000–)	Screw, Pan, Phl, M4 X 0.70 X 10, Blk	4
27	1067886	(000000–)	Light, Dome, Cab	1
28	1069317	(000000–)	Screw, Pan, Phl, M4 X 0.70 X 25, Blk	1
29	1067870	(000000–)	Fuseholder, Cab	1
30	1016029	(000000–)	Fuse, Blade, 005a, 32vdc	2
31	611140	(000000–)	Fuse, Blade, 020a, 32vdc	1
32	1067917	(000000–)	Fuse, Blade, 002a, 32vdc	1
33	1069317	(000000–)	Screw, Pan, Phl, M4 X 0.70 X 25, Blk	4
34	1067910	(000000–)	Label [Fuse Block]	1
35	1069330	(000000–)	Label, Circuitbreaker [Fuse Box]	1
36	1066972	(000000–)	Cover, Fuse	1
37	1059252	(000000–)	Washer, Flat, 0.19b 0.50d .03, Stl, Blk	4
38	1069315	(000000–)	Screw, Pan, Phl, M4 X 0.70 X 10, Blk	4
39	1072046	(005700–)	Insulation, Heat, Liner, Rh	1
40	1072047	(005700–)	Insulation, Heat, Liner, Lh	1

Fig. 12 - Cab Door Group

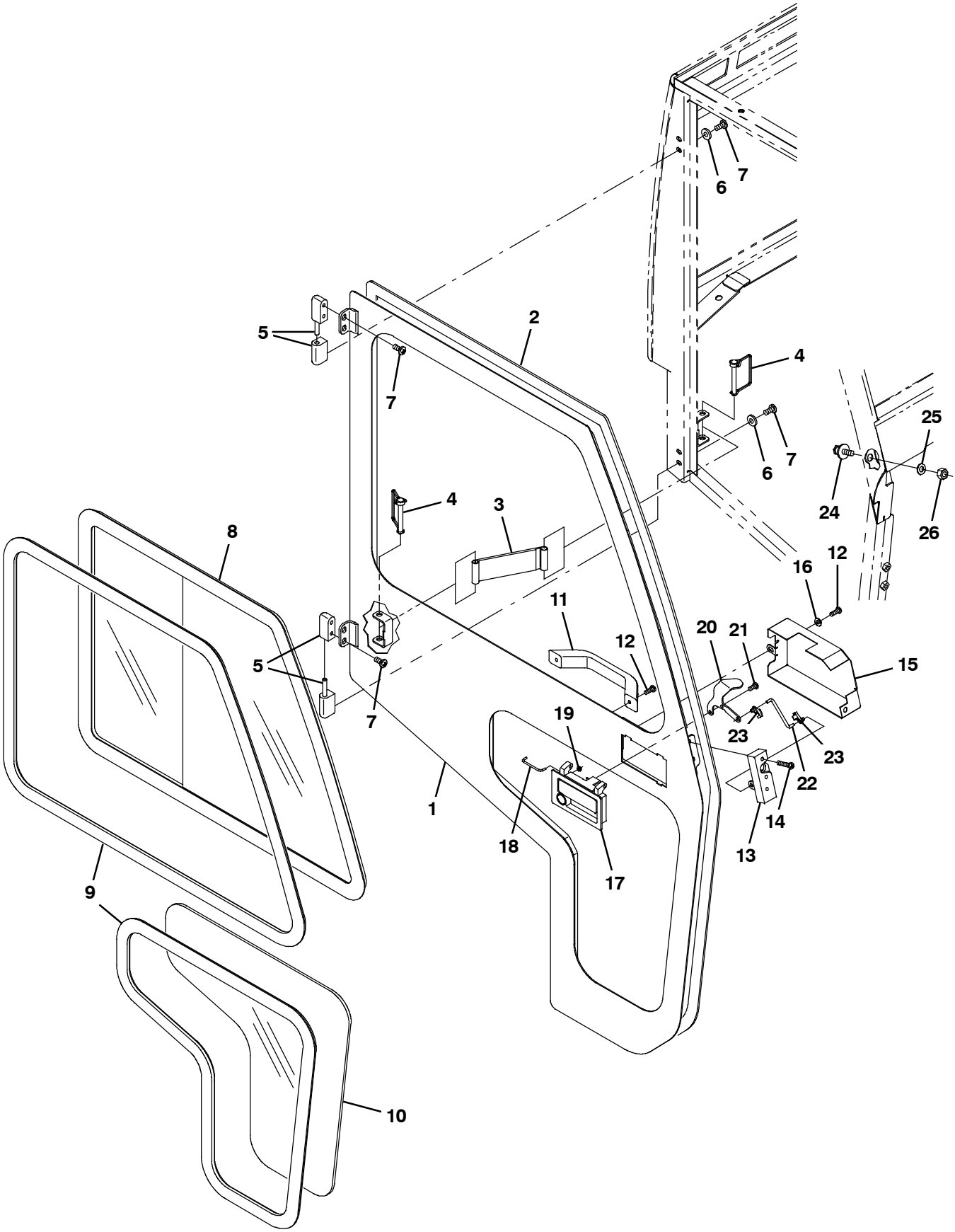

354753

Fig. 12 - Cab Door Group

	Ref.	Part No.	Serial Number	Description	Qty.
	1	1067216	(000000-)	Door Wldt, Rh	1
	2	1015261	(000000-)	Seal, Afmkt, Bulb, Str, 0.76, 0.93w 20ft	1
	3	1067895	(000000-)	Strap, Door, Cab	1
	4	1067881	(000000-)	Pin, Lock, Cab	2
	5	1067879	(000000-)	Hinge, Bracket, Door, Cab	2
	6	1069326	(000000-)	Washer, Flat, 0.31, Sae, Blk	4
	7	1069311	(000000-)	Screw, Pan, Phl, M8 X 1.25 X 16, Blk	8
	8	1067877	(000000-)	Pane, Wndw, Slide, Rh, Cab	1
	9	9009220	(000000-)	Seal, Afmkt, Rbr, Wndw, 08ft	2
	10	1067876	(000000-)	Pane, Wndw, Lower, Cab	1
	11	1067889	(000000-)	Handle, Door, Cab	1
	12	1069312	(000000-)	Screw, Pan, Phl, M6 X 1.0 X 16, Blk	4
	13	1067885	(000000-)	Latch, Cab	1
	14	1069313	(000000-)	Screw, Pan, Phl, M6 X 1.0 X 35, Blk	3
	15	1066980	(000000-)	Cover, Latch	1
	16	1069322	(000000-)	Washer, Flat, 0.25, Sae, Blk	2
▽	17	1067890	(000000-)	Handle, Locking, Cab	1
▲		1067919	(000000-)	Key, Latch, Door Assy	1
	18	1062944	(000000-)	Rod, Handle, Cab	1
	19	1067907	(000000-)	Retainer, Shaft, 0.12id .38od X .052	1
	20	1066957	(000000-)	Bracket, Handle, Latch	1
	21	74027	(000000-)	Screw, Pan, Phl, M6 X 1.00 X 12, Nl, Pl	2
	22	1062952	(000000-)	Rod, Latch, Cab	1
	23	1067880	(000000-)	Clip, Rod, Cab	2
	24	1067884	(000000-)	Stud, Strike, Cab	1
	25	32492	(000000-)	Washer, Flat, 0.38, Std	1
	26	25014	(000000-)	Nut, Hex, Std, .38-16	1

Fig. 13 - Cab Heater Group

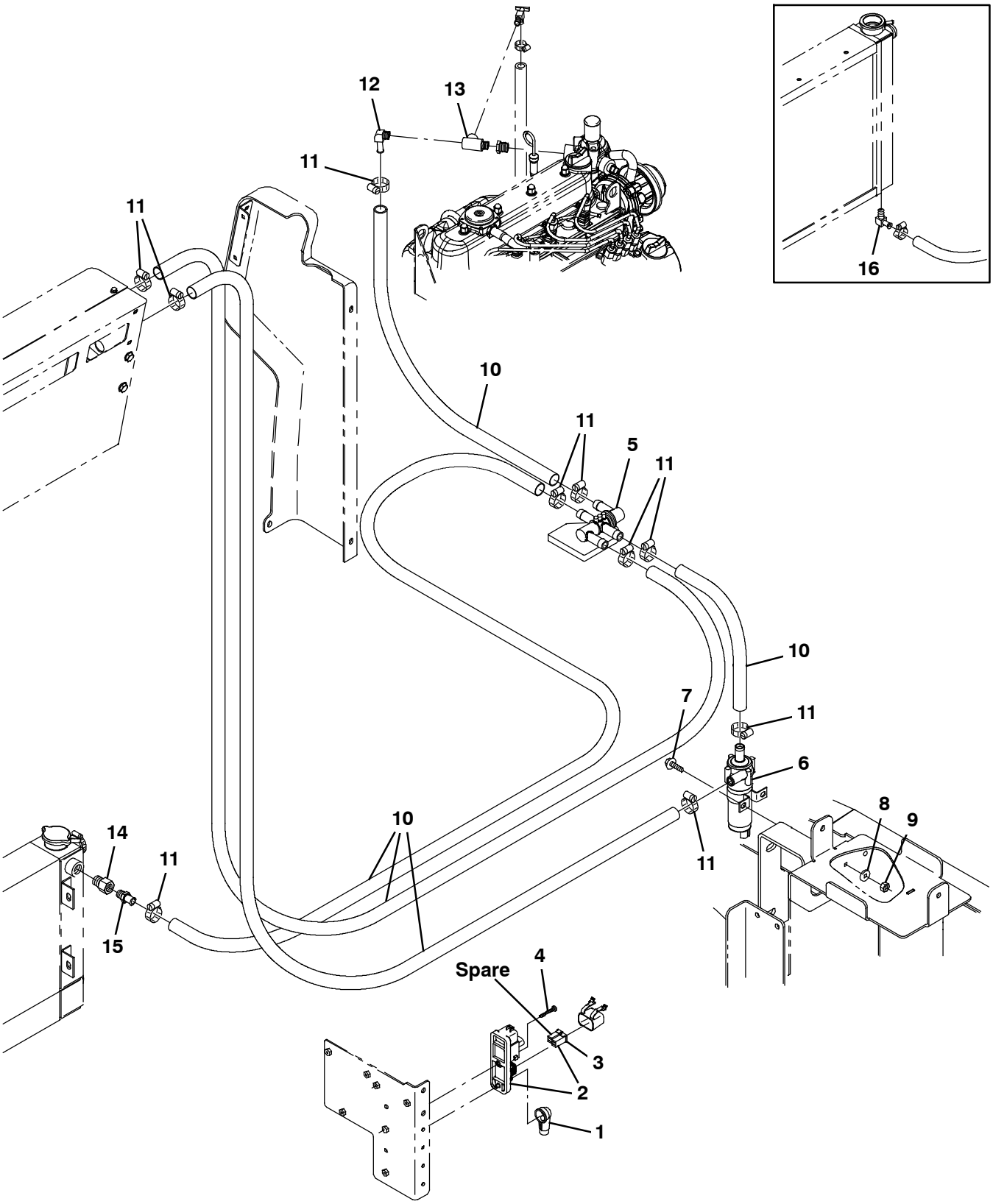

354780

Fig. 13 - Cab Heater Group

	Ref.	Part No.	Serial Number	Description	Qty.
	1	1016314	(000000-)	Boot, 90deg .50id 1.00id 2.50l, Red	1
▽	2	1029105	(000000-)	Relay Assy, 12vdc [2f/1r]	1
▲	3	1036230	(000000-)	Fuse, 60a, 32vdc [Fem Maxi]	1
	4	06940	(000000-)	Screw, Pan, Phl, M5 X 0.80 X 50, 4.8	1
	5	1045063	(000000-)	Valve, Heater	1
	6	1044279	(000000-)	Pump Assy, Water, 12vdc	1
	7	222159	(000000-)	Screw, Hex, M6 X 1.00 X 25, Fmg	2
	8	32490	(000000-)	Washer, Flat, 0.25, Std	2
	9	08708	(000000-)	Nut, Hex, Lock, M6 X 1.00, Nl	2
	10	1016563	(000000-)	Hose, Afmkt, Rbr, Heater, 0.62id, 20ft	1
	11	63810	(000000-)	Clamp, Hose, Wormdrive, 0.56-1.06d, .56w	10
	12	1045888	(000000-)	Fitting, Brs, E90, Bm10/Pm04	1
	13	150709	(000000-)	Fitting, Brs, Tee, Pf04/Pf04/Pm04, Run	1
	14	47167	(002100-)	Fitting, Brs, Str, Pf06/Pm08	1
	15	27767	(002100-)	Fitting, Brs, Str, Em10/Pm06	1
	16	1045888	(000000-002099)	Fitting, Brs, E90, Bm10/Pm04	1

Fig. 14 - Cab Air Conditioner Group

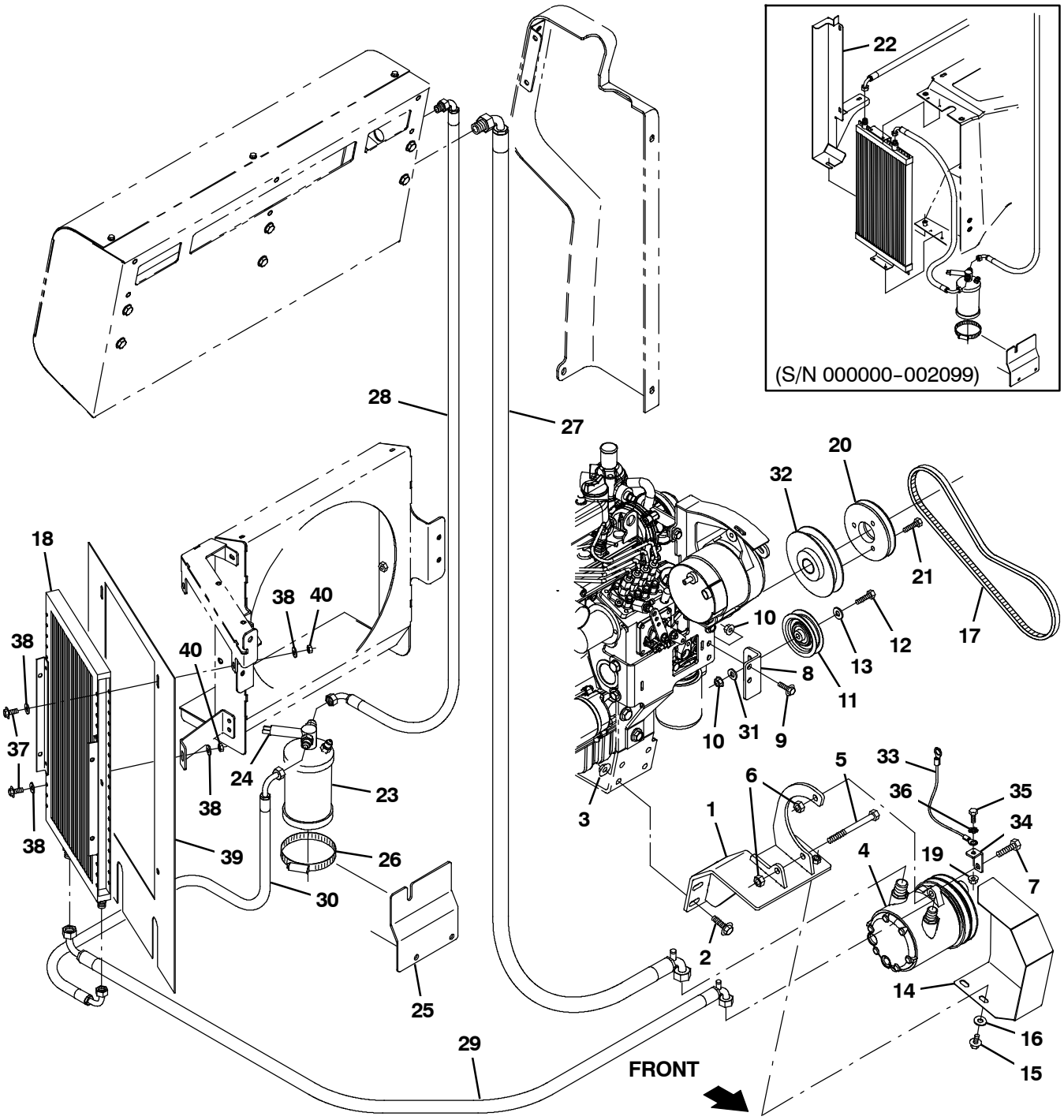

354781

Fig. 14 - Cab Air Conditioner Group

Ref.	Part No.	Serial Number	Description	Qty.
1	1036564	(000000-)	Bracket Wldt, Mtg, Compressor	1
2	1037358	(000000-)	Screw, Hex, M10 X 1.50 X 35, 9.8, Sems	4
3	07792	(000000-)	Nut, Hex, Flng, M10 X 1.50	4
4	393359	(000000-)	Compressor, A/C [134, Tm-08hd]	1
5	06966	(000000-)	Screw, Hex, M10 X 1.50 X 110, 8.8	1
6	41430	(000000-)	Nut, Hex, Lock, M10 X 1.5, Nl	2
7	39285	(000000-)	Screw, Hex, M10 X 1.50 X 40, 8.8	1
8	1046946	(000000-)	Plate, Idler	1
9	1037354	(000000-)	Screw, Hex, M8 X 1.25 X 30, 9.8, Sems	2
10	07791	(000000-)	Nut, Hex, Flng, M8 X 1.25	3
11	81710	(000000-)	Sheave, Flat, 2.6d 0.62w 0.38b	1
12	06955	(000000-)	Screw, Hex, M8 X 1.25 X 35, 8.8	1
13	32491	(000000-)	Washer, Flat, 0.31, Std	1
14	1040126	(000000-)	Guard, Belt, Compressor	1
15	16931	(000000-)	Screw, Hex, M8 X 1.25 X 20, 8.8	2
16	32491	(000000-)	Washer, Flat, 0.31, Std	2
17	1058133	(000000-)	Belt, V, 37.3l [Ax]	1
18	1041870	(000000-)	Condenser, Ac	1
19	07790	(000000-)	Nut, Hex, Flng, M6 X 1.00	1
20	393370	(000000-)	Sheave, 01grv, 04.1pd 1.6b [Xl]	1
21	76957	(000000-)	Screw, Hex, .31-18 X 1.50, G5	3
22	1043045	(000000-002099)	Plate, Filler, A/C	1
23	1045033	(000000-)	Dryer, A/C	1
24	1045203	(000000-)	Switch, A/C [Binary]	1
25	1045681	(000000-)	Bracket, Sppt	1
26	43555	(000000-)	Clamp, Hose, Wormdrive, 2.50-3.50d, .50w	1
27	1045151	(000000-)	Hose, A/C, 10, E90/E90, 060.0l [R134]	1
28	1045153	(000000-)	Hose, A/C, 06, E90/E90, 052.0l [R134]	1
29	1045155	(000000-)	Hose, A/C, 08, E90/E90, 052.0l [R134]	1
30	1045156	(000000-)	Hose, A/C, 06, E90/E90, 021.0l [R134]	1
31	41186	(000000-)	Washer, Flat, Belleville, .31	1
32	393371	(000000-)	Sheave, 01grv, Rwk 393400 [3v]	1
33	31525	(000000-)	Wire, 10ga 16.0l Blk .25ring /.38ring	1
34	1047225	(000000-)	Angle, Mtg, Ground	1
35	06943	(000000-)	Screw, Hex, M6 X 1.00 X 20, 8.8	1
36	41140	(000000-)	Washer, Lock, Int-ext, 0.25	1
37	55845	(002100-)	Screw, Hex, M5 X 0.80 X 16, Fmg	4
38	19066	(002100-)	Washer, Flat, 10	8
39	1072054	(005700-)	Skirt, A/C	1
41	08708	(005700-)	Nut, Hex, Lock, M6 X 1.00, Nl	4

Fig. 15 - Cab Fuel Cover Group (002100-)

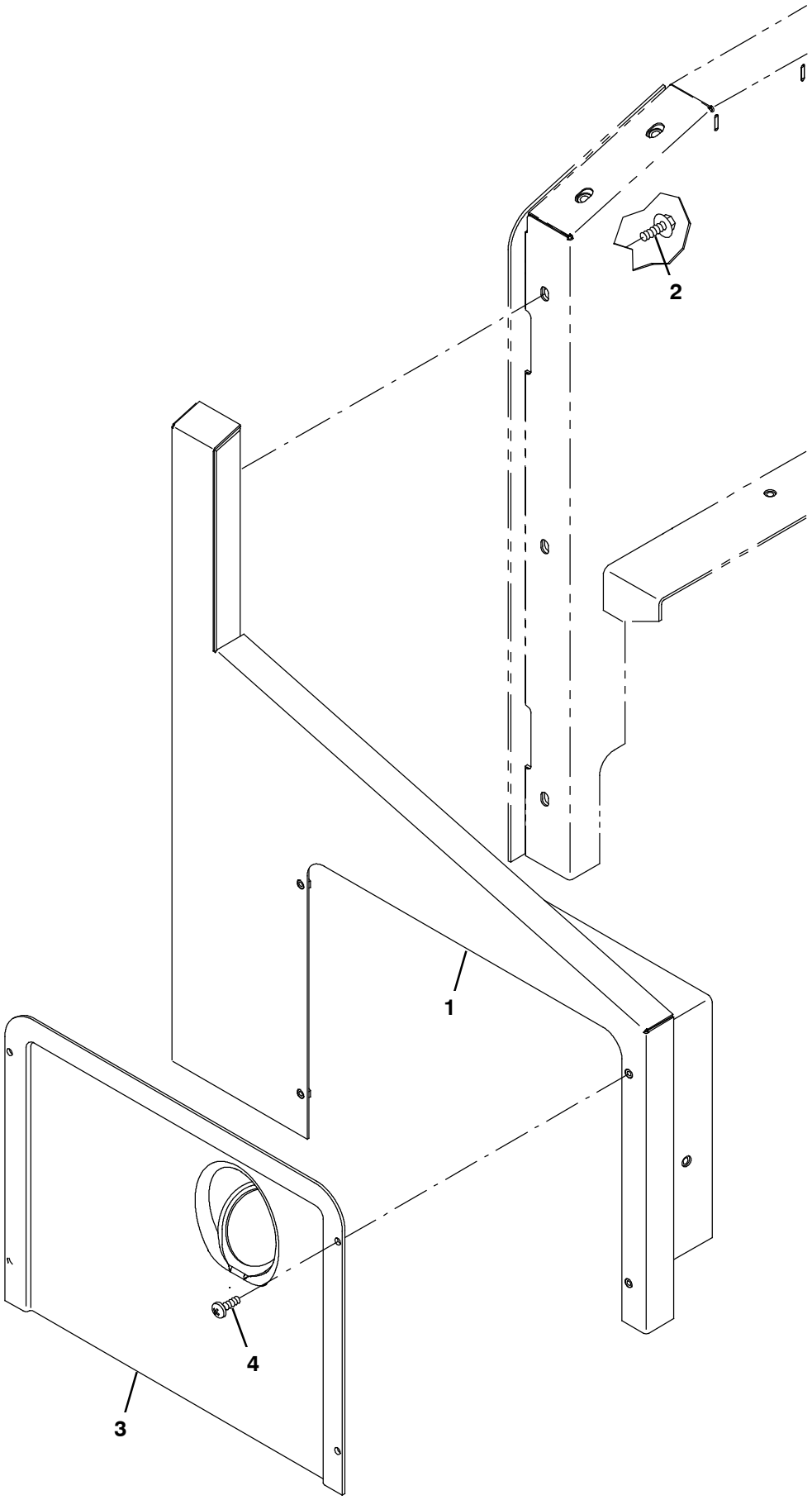

356057

Fig. 15 - Cab Fuel Cover Group (002100-)

Ref.	Part No.	Serial Number	Description	Qty.
1	1036608	(002100-)	Panel Wldt, Side	1
2	1037346	(002100-)	Screw, Hex, M8 X 1.25 X 25, 9.8, Sems	3
3	9004526	(002100-)	Cover, Dsl, W/ Label, Replmt	1
4	1045525	(002100-)	Screw, Pan, Phl, M6 X 1.00 X 12, Blk	4

Fig. 16 - Cab Wire Harness Group

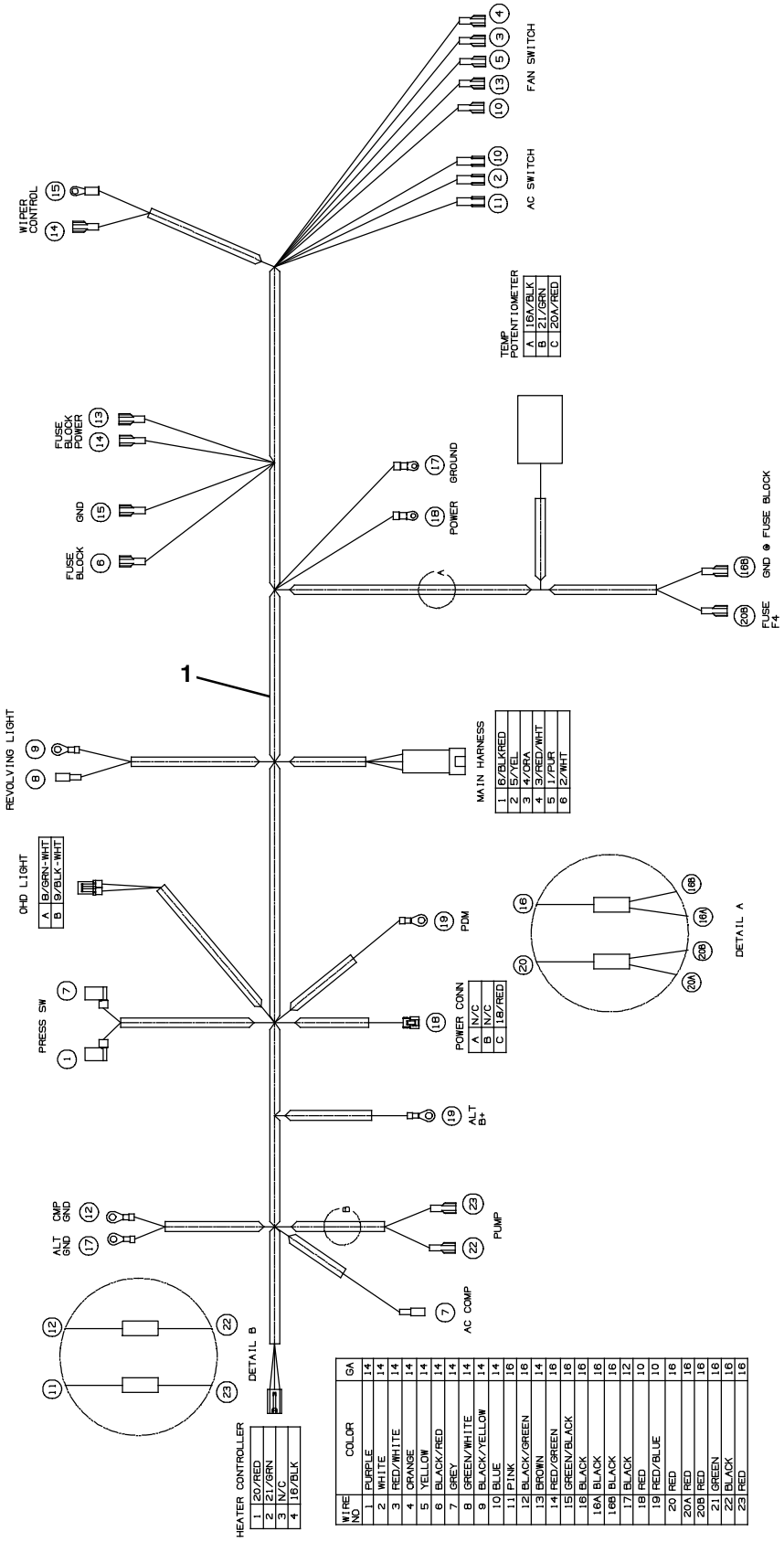

354761

Ref.	Part No.	Serial Number	Description	Qty.
1	1067912	(000000-)	Harness, Wire, Cab	1

Fig. 17 - Cab Wire Harness Electrical Schematic

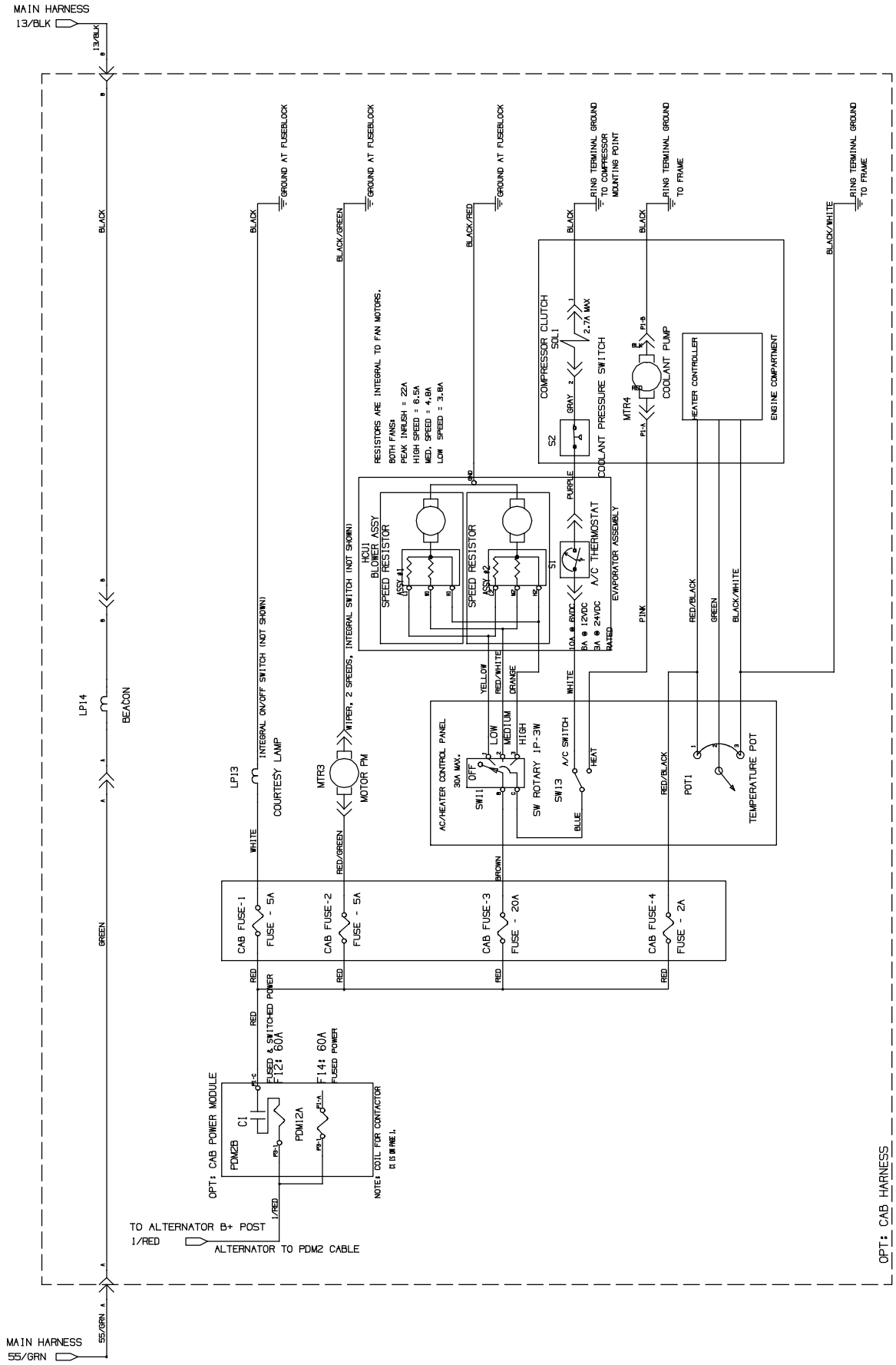

1029278- 354728

Fig. 18 - Corner Bumper Kit (000000-002099)

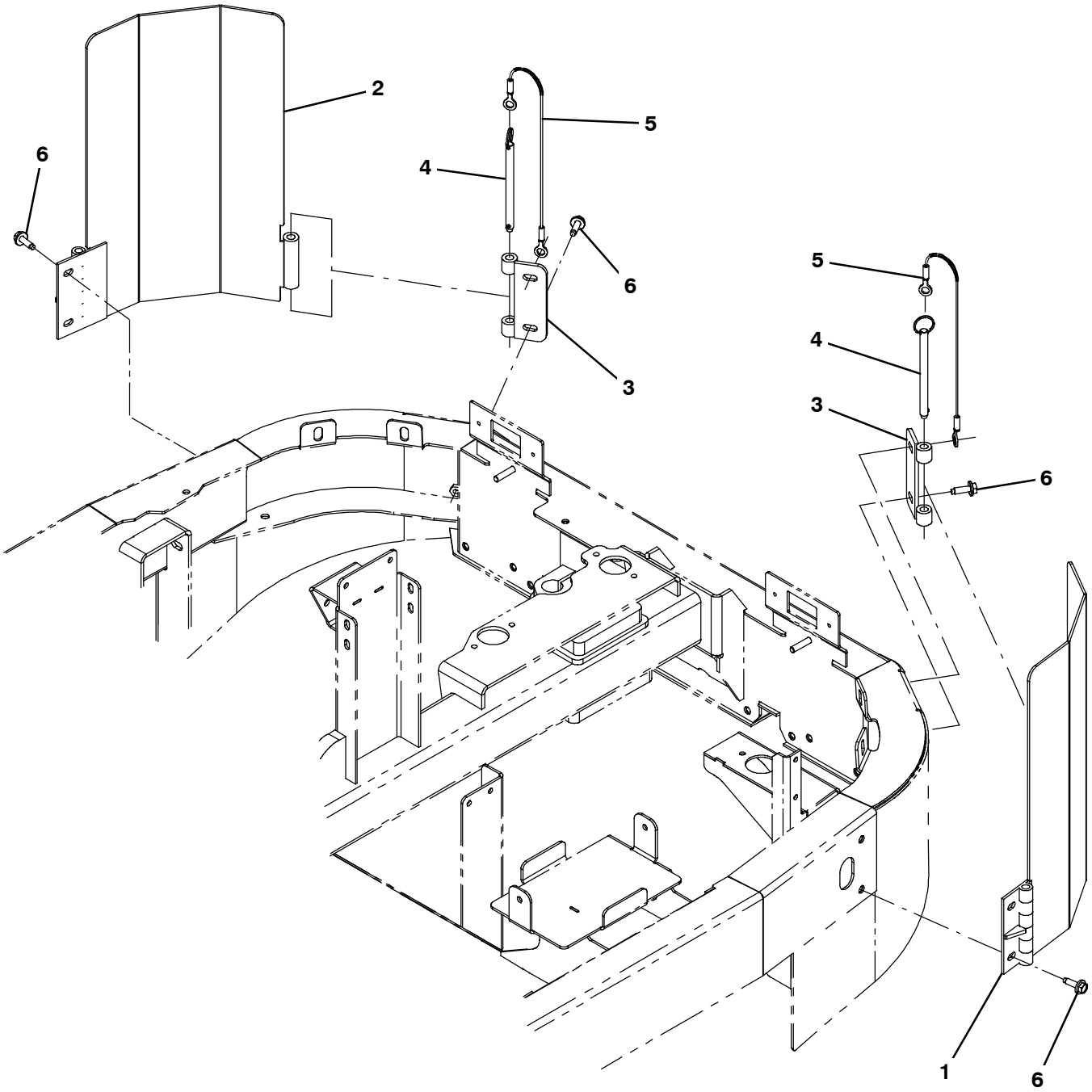

354746

	Ref.	Part No.	Serial Number	Description	Qty.
▽		9004107	(000000-002099)	Bumper Kit, Corner, Ci, [S30]	1
▲	1	1042888	(000000-002099)	Angle Wldt, Bmpr, Tower, Lh	1
▲	2	1042885	(000000-002099)	Angle Wldt, Bmpr, Tower, Rh	1
▲	3	1043183	(000000-002099)	Bracket Wldt, Mtg, Bmpr	2
▲	4	1043176	(000000-002099)	Pin, Hitch, .500d X 6.00l, Pl	2
▲	5	87172	(000000-002099)	Cable, Glv .13d 010.0l .52eye /.52eye	2
▲	6	1037358	(000000-002099)	Screw, Hex, M10 X 1.5 X 35, 9.8, Sems	8

Fig. 19 - Corner Bumper Kit (002100-)

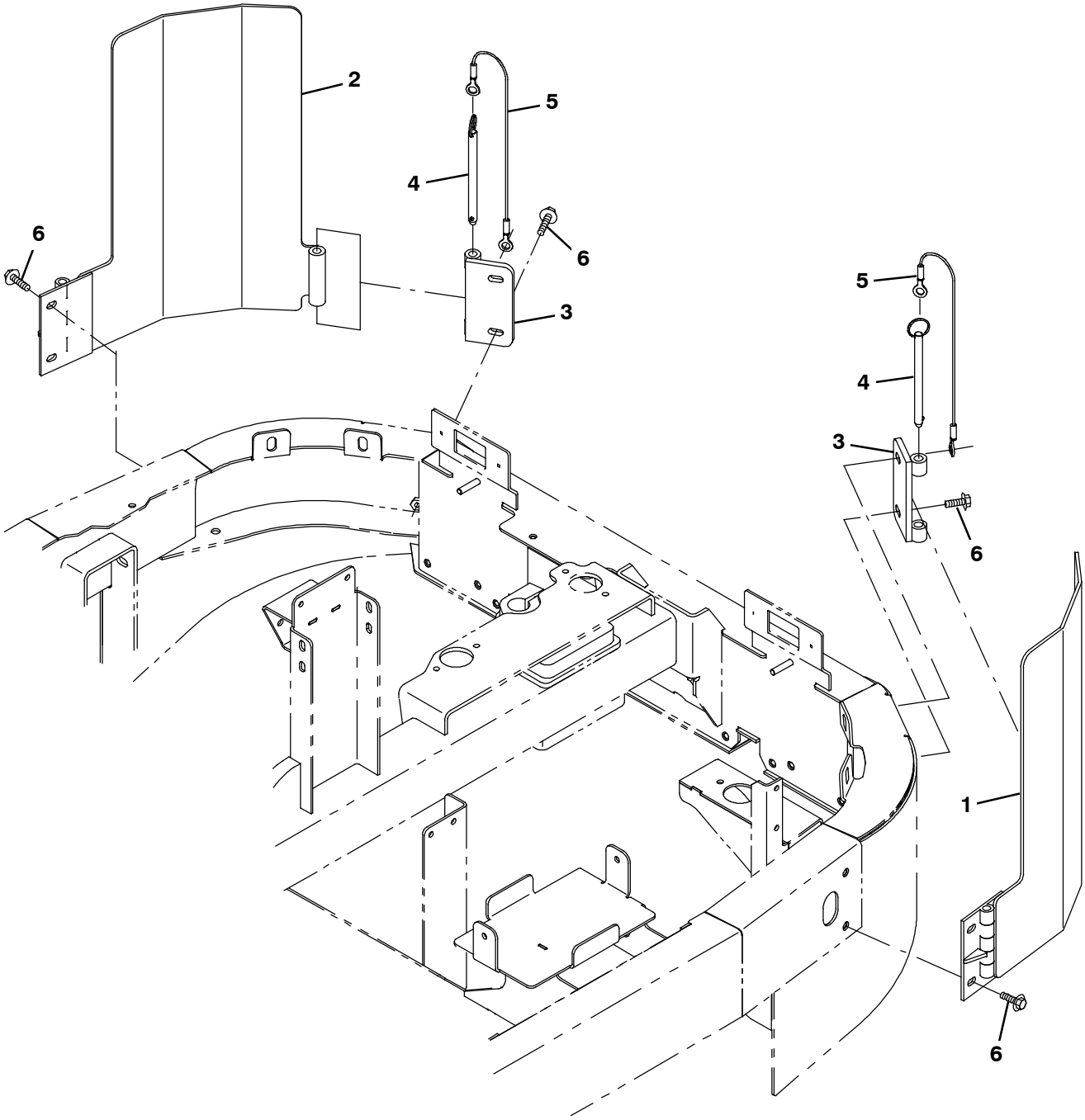

	Ref.	Part No.	Serial Number	Description	Qty.
▽		9008195	(002100-)	Bumper Kit, Corner, Ci, [S30]	1
▲	1	1060546	(002100-)	Angle Wldt, Bmpr, Tower, Lh	1
▲	2	1061162	(002100-)	Angle Wldt, Bmpr, Tower, Rh	1
▲	3	1061629	(002100-)	Bracket Wldt, Mtg, Bmpr	2
▲	4	1043176	(002100-)	Pin, Hitch, .500d X 6.00l, Pl	2
▲	5	87172	(002100-)	Cable, Glv .13d 010.0l .52eye /.52eye	2
▲	6	1037358	(002100-)	Screw, Hex, M10 X 1.5 X 35, 9.8, Sems	8

Fig. 20 - Telemetry Group

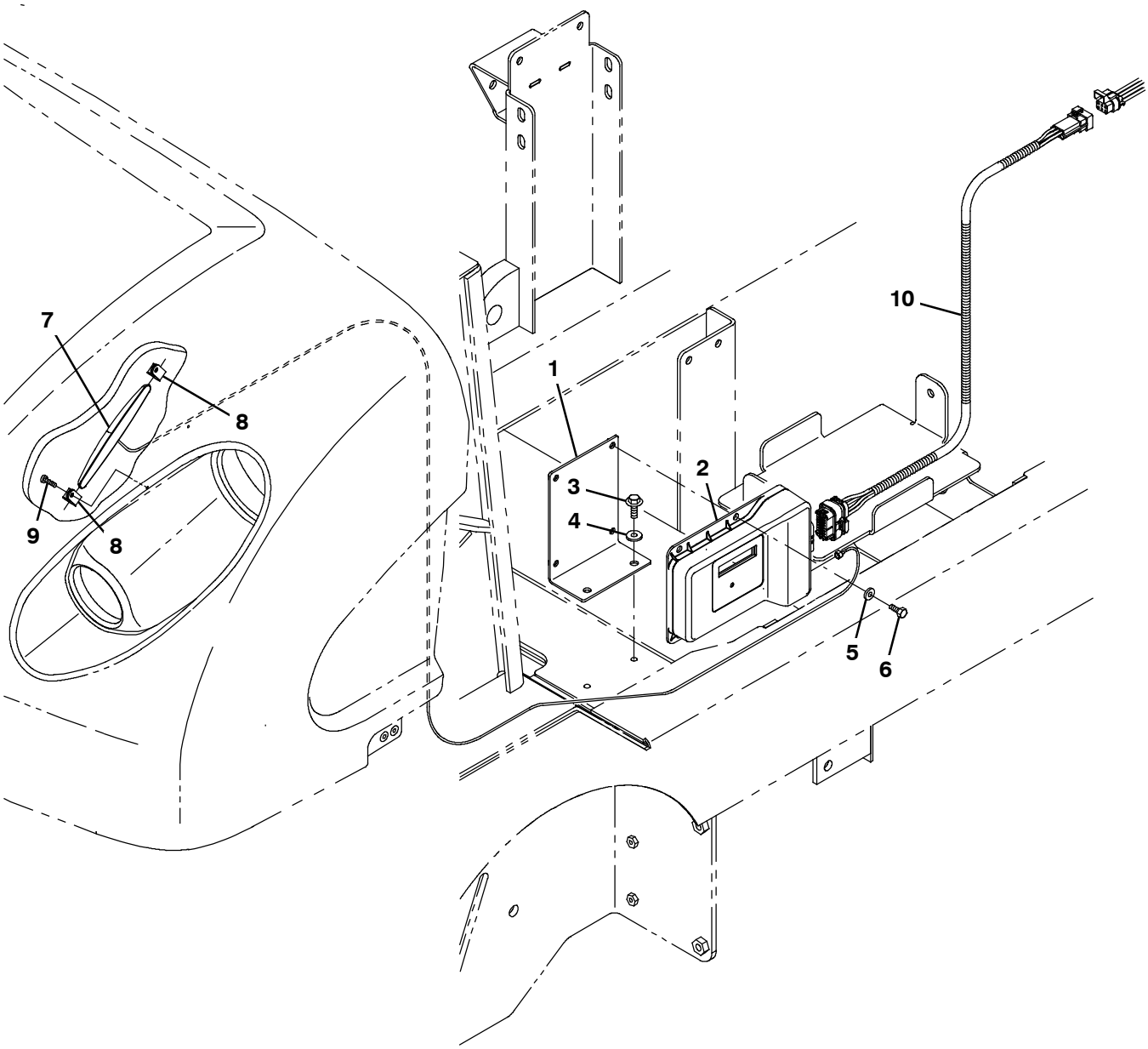

356285

Ref.	Part No.	Serial Number	Description	Qty.
1	1070124	(000000-)	Bracket, Mtg, Telem [S30]	1
2	9010085	(000000-)	Control Box Assy Kit, Replmt, Telem[Usa]	1
2	9010086	(000000-)	Control Box Assy Kit, Replmt, Telem[Can]	1
3	763045	(000000-)	Screw, Hex, M8 X 1.25 X 20, Fmg	2
4	32492	(000000-)	Washer, Flat, 0.38, Std	2
5	19066	(000000-)	Washer, Flat, 0.25b 0.56d .05, Pl, 10	4
6	09244	(000000-)	Screw, Hex, M5 X 0.80 X 16, 8.8	4
7	1070324	(000000-)	Antenna, Telem, 110 In [Gprs]	1
8	140916	(000000-)	Clamp, Cable, Nyl, 0.62d, Nat	2
9	360973	(000000-)	Screw, Pan, 12-16 X 0.50, F/ Plstc	2
10	1071132	(000000-)	Harness, Ele [Extn, Telemetry]	1
	1069580	(000000-)	Label, Opertnl, Telem [Fcc/Ic]	1

Fig. 21 - Fire Extinguisher Kit

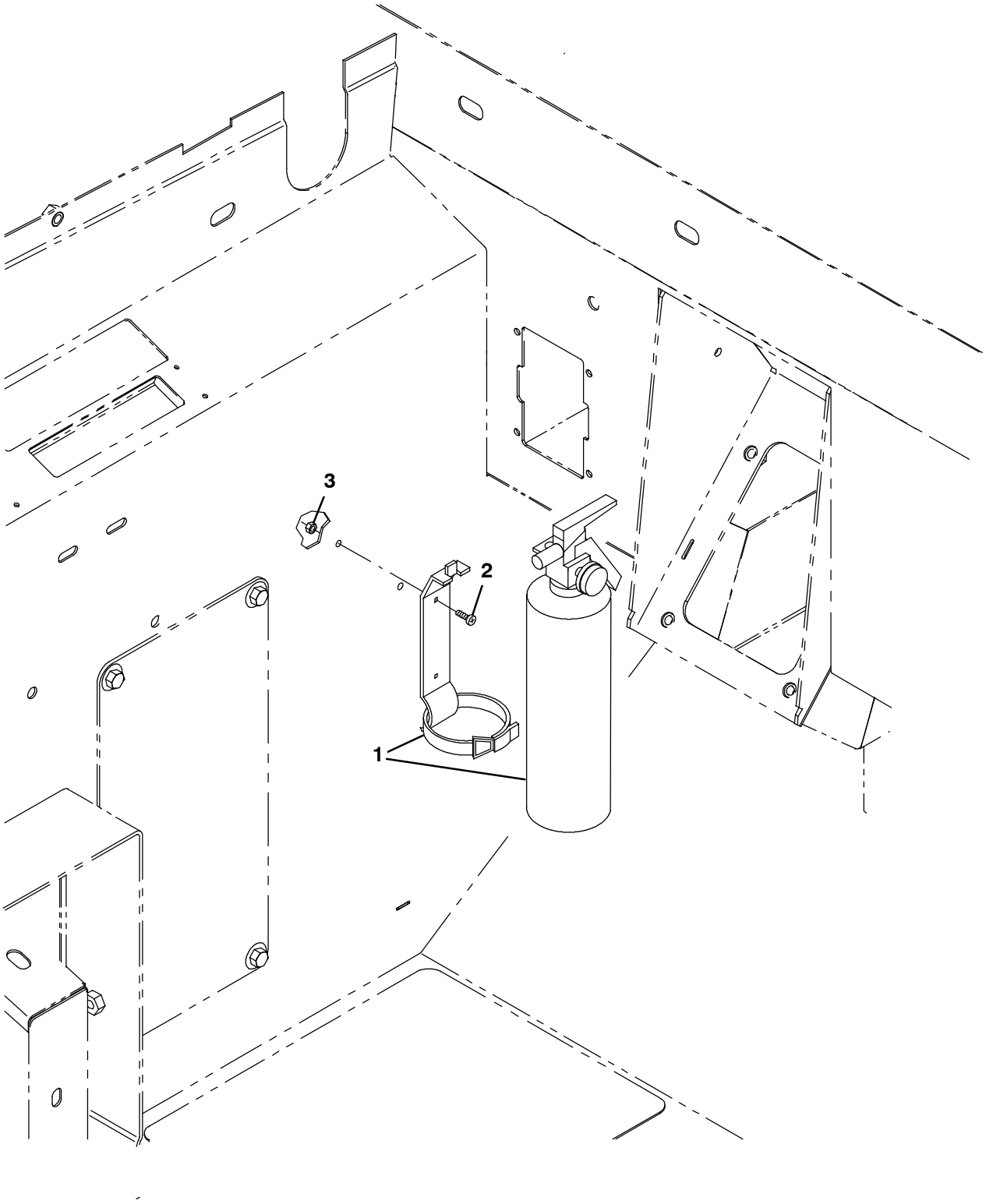

354747

	Ref.	Part No.	Serial Number	Description	Qty.
▽		9003933	(000000-)	Extinguisher Kit, Fire, Ci [S30]	1
▲	1	25312	(000000-)	Extinguisher, Fire, 2.5 Lb Dry	1
▲	2	06933	(000000-)	Screw, Pan, M5 X 0.80 X 16, 4.8	2
▲	3	06549	(000000-)	Nut, Hex, Lock, M5 X 0.80, Nl	2

Fig. 22 - Documentation Group

Ref.	Part No.	Serial Number	Description	Qty.
	9004087	(000000-)	Manual, Oprtr [S30, Dsl En Na]	1
	9004091	(000000-)	Manual, Parts [S30, Dsl En]	1
	9004088	(000000-)	Manual, Oprtr [S30, Dsl Es Na]	1
	9004089	(000000-)	Manual, Oprtr [S30, Dsl Fr Na]	1
	9004090	(000000-)	Manual, Oprtr [S30, Dsl Jp]	1
	9004100	(000000-002099)	Media, Oprtr, DVD [S30 EN ES FR]	1
	9008178	(002100-)	Video, Oprtr, Dvd [S30 En Es Fr]	1
	9004086	(000000-)	Manual, Service [S30 EN]	1
	84660	(000000-)	Manual, Eng [Kubo, V1505e]	1
	9004645	(000000-)	Manual, Oprtr [S30 Dsl, Cz, Ce]	1
	9004646	(000000-)	Manual, Oprtr [S30 Dsl, De, Ce]	1
	9004647	(000000-)	Manual, Oprtr [S30 Dsl, Dk, Ce]	1
	9004648	(000000-)	Manual, Oprtr [S30 Dsl, En, Ce]	1
	9004649	(000000-)	Manual, Oprtr [S30 Dsl, Es, Ce]	1
	9004650	(000000-)	Manual, Oprtr [S30 Dsl, Fi, Ce]	1
	9004651	(000000-)	Manual, Oprtr [S30 Dsl, Fr, Ce]	1
	9004652	(000000-)	Manual, Oprtr [S30 Dsl, Gr, Ce]	1
	9004653	(000000-)	Manual, Oprtr [S30 Dsl, Hu, Ce]	1
	9004654	(000000-)	Manual, Oprtr [S30 Dsl, It, Ce]	1
	9004655	(000000-)	Manual, Oprtr [S30 Dsl, Nl, Ce]	1
	9004656	(000000-)	Manual, Oprtr [S30 Dsl, No, Ce]	1
	9004657	(000000-)	Manual, Oprtr [S30 Dsl, Pl, Ce]	1
	9004658	(000000-)	Manual, Oprtr [S30 Dsl, Pt, Ce]	1
	9004659	(000000-)	Manual, Oprtr [S30 Dsl, Ru, Ce]	1
	9004660	(000000-)	Manual, Oprtr [S30 Dsl, Se, Ce]	1
	9004661	(000000-)	Manual, Oprtr [S30 Dsl, Tr, Ce]	1
	9004662	(000000-)	Manual, Oprtr [S30 Dsl, Ee, Ce]	1
	9004663	(000000-)	Manual, Oprtr [S30 Dsl, Lv, Ce]	1
	9004664	(000000-)	Manual, Oprtr [S30 Dsl, Lt, Ce]	1
	9004665	(000000-)	Manual, Oprtr [S30 Dsl, Sk, Ce]	1
	9004666	(000000-)	Manual, Oprtr [S30 Dsl, Si, Ce]	1
	9004727	(000000-)	Manual, Oprtr [S30 Dsl, Bg, Ce]	1
	9004728	(000000-)	Manual, Oprtr [S30 Dsl, Ro, Ce]	1
	1045947	(000000-002099)	Instr, Maint, Wall Chart[S30-Online]	1
	1068947	(002100-)	Instr, Maint, Wall Chart [Rotomold S30] (ONLINE ONLY)	1

To view, print, order, download the latest Parts manual, other language Operator manuals, and Use and Care Guides (wall charts) visit:

www.tennantco.com/manual

SECTION 4

Contents **Page**

Fig. 1 – Hydraulic Motor Breakdown, 379608 4–2
Fig. 2 – Hydraulic Motor Breakdown, 379607 4–3
Fig. 3 – Hydraulic Steering Valve Breakdown, 1024260 4–4
Fig. 4 – Hydraulic Valve Breakdown, 1040091 4–6
Fig. 5 – Hydraulic Valve Breakdown, 1034671 4–8
Fig. 6 – AC and Heater Box Breakdown, 1067918 4–10
Fig. 7 – Hydraulic Motor Breakdown, 1027756 4–12
Fig. 8 – Hydraulic Motor Breakdown, 1054901 4–14
Fig. 9 – Hydraulic Piston Pump Breakdown, 1029254 4–16
Fig. 10 – Hydraulic Piston Pump Breakdown, 1054905 4–18
Fig. 11 – Hydraulic Piston Pump Breakdown, 1029255 4–20
Fig. 12 – Hydraulic Piston Pump Breakdown, 1029255 4–22
Fig. 13 – Hydraulic Manual Control Breakdown, 74273 4–24
Fig. 14 – Hydraulic Flow Divider Valve Breakdown, 1033685 4–26

Fig. 1 - Hydraulic Motor Breakdown, 379608

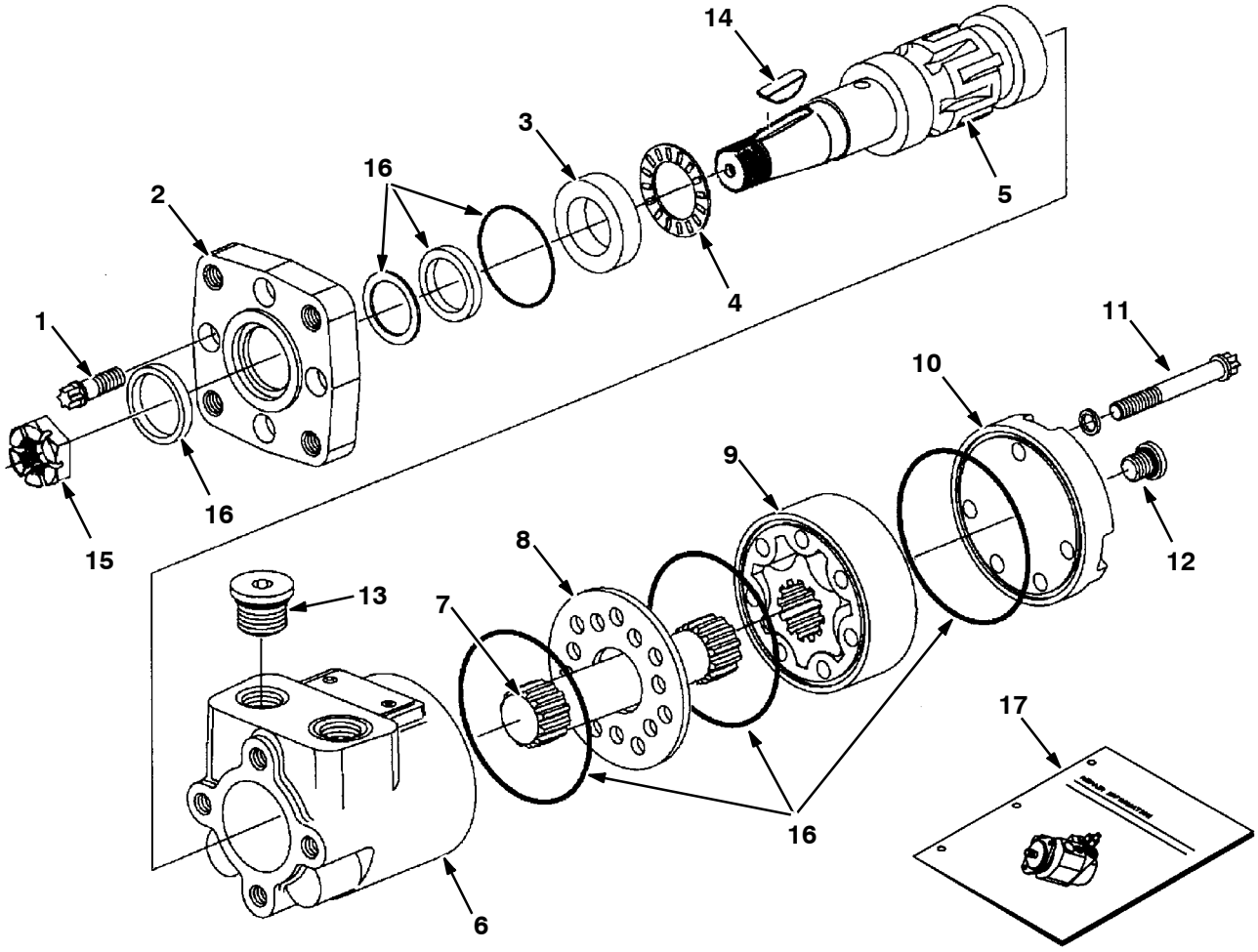

09606 - 09670

	Ref.	Part No.	Serial Number	Description	Qty.
▽		379608	(000000-)	Motor, Hyd, Gear, [In] 02.8 1500	1
▲	1	37555	(000000-)	Screw, Motor, Hyd	4
▲	2	31354	(000000-)	Flange, Motor, Hyd	1
▲	3	16695	(000000-)	Race, Thrust, Motor, Hyd	1
▲	4	45628	(000000-)	Bearing, Thrust, Motor, Hyd	1
▲	5	31375	(000000-)	Shaft, Output, Motor, Hyd	1
▲	6	74100	(000000-)	Housing, Motor, Hyd	1
▲	7	34176	(000000-)	Drive, Motor, Hyd	1
▲	8	74094	(000000-)	Plate, Spacer, Motor, Hyd	1
▲	9	31381	(000000-)	Gerotor Set, Motor, Hyd	1
▲	10	74095	(000000-)	End Cap, Motor, Hyd	1
▲	11	74174	(000000-)	Cap, Screw, Strg Valve	5
▲	12	74098	(000000-)	Fitting, Plug, O-Ring, #4	1
▲	13	74099	(000000-)	Fitting, Plug, O-Ring, Motor, Hyd	2
▲	14	00500-15	(000000-)	Key, Woodruff, 0.25 1.00, [Asa#0808]	1
▲	15	39527	(000000-)	Nut, Hex, Sltd, .75-16	1
▲	16	22654	(000000-)	Kit, Seal, Motor, Hyd	1
	17	74250	(000000-)	Instr, Motor, Hyd, Repair [En]	1

Fig. 2 - Hydraulic Motor Breakdown, 379607

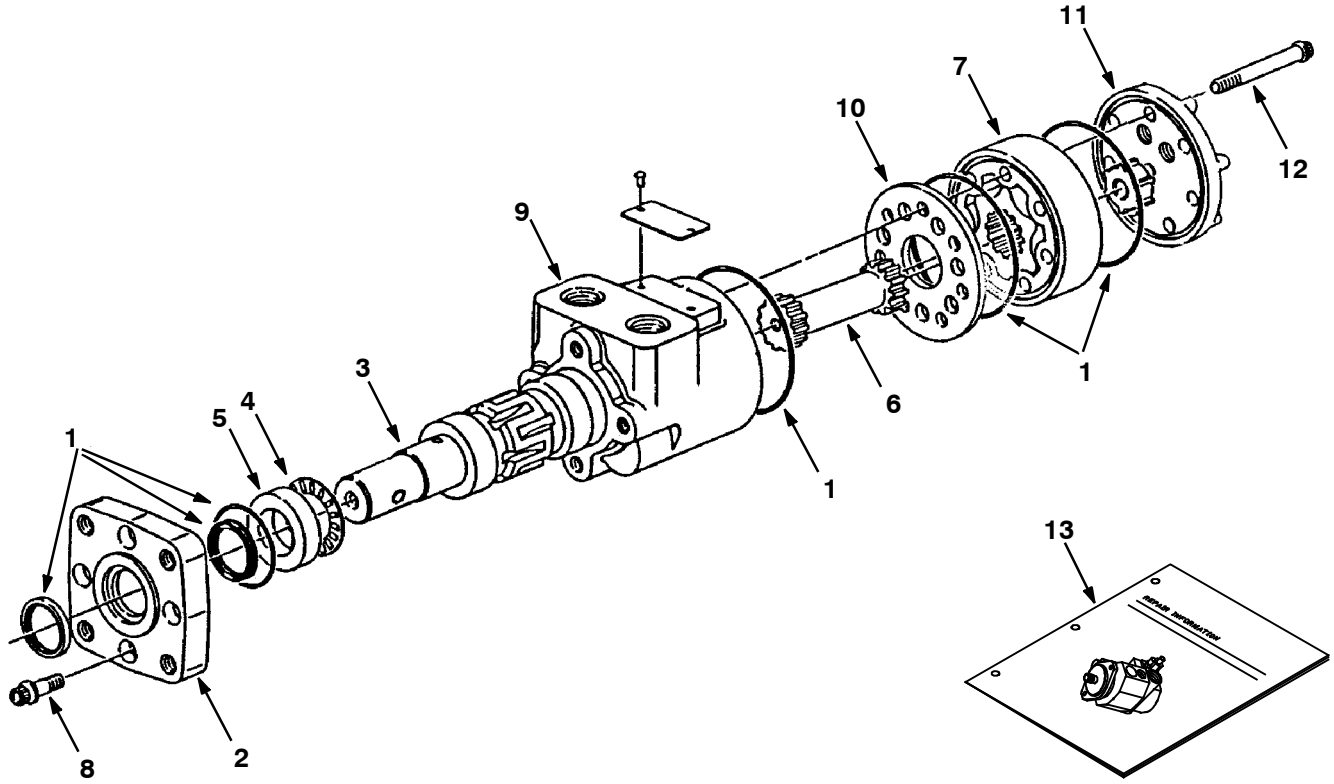

08926 - 09670

	Ref.	Part No.	Serial Number	Description	Qty.
▽		379607	(000000–)	Motor, Hyd, Gear, [In] 17.9 B 1500	1
▲	1	22654	(000000–)	Kit, Seal, Motor, Hyd	1
▲	2	31354	(000000–)	Flange, Motor, Hyd	1
▲	3	31373	(000000–)	Shaft, Output, Motor, Hyd	1
▲	4	45628	(000000–)	Bearing, Thrust, Motor, Hyd	1
▲	5	16695	(000000–)	Race, Thrust, Motor, Hyd	1
▲	6	31380	(000000–)	Drive, Motor, Hyd	1
▲	7	31385	(000000–)	Gerotor Set, Motor, Hyd	1
▲	8	37555	(000000–)	Screw, Motor, Hyd	4
▲	9	74100	(000000–)	Housing, Motor, Hyd	1
▲	10	74094	(000000–)	Plate, Spacer, Motor, Hyd	1
▲	11	74101	(000000–)	Cap, End, Motor, Hyd	1
▲	12	65232	(000000–)	Screw, Cap, Motor, Hyd	5
	13	74250	(000000–)	Instruction, Repair, Motor, Hyd	1

Fig. 3 - Hydraulic Steering Valve Breakdown, 1024260

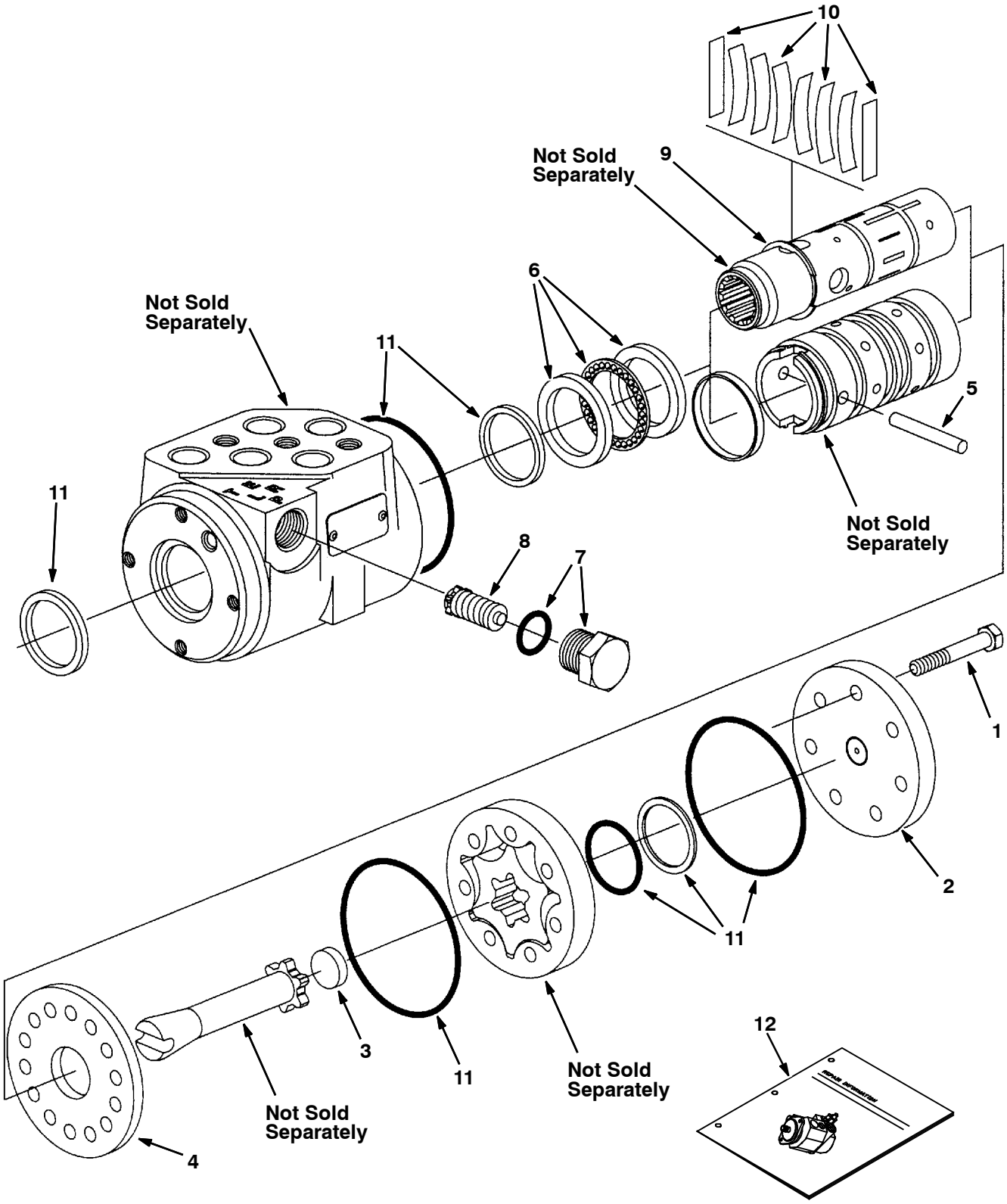

Fig. 3 - Hydraulic Steering Valve Breakdown, 1024260

	Ref.	Part No.	Serial Number	Description	Qty.
▽		1024260	(000000-)	Steer-Control, Hyd05, 06.1 2030	1
▲	1	74183	(000000-)	Screw, Valve, Steering	7
▲	2	74185	(000000-)	Cap, End, Valve, Steering	1
▲	3	74193	(000000-)	Spacer, Valve, Steering	1
▲	4	74222	(000000-)	Plate, Wear, Steering Valve	1
▲	5	74232	(000000-)	Pin, Valve, Steering	1
▲	6	21935	(000000-)	Bearing Kit [Cl]	1
▲	7	21933	(000000-)	Plug Assy [Cl]	1
▲	8	21934	(000000-)	Valve Assy, Relief [Cl]	1
▲	9	74243	(000000-)	Ring, Retainer, Steering Valve	1
▲	10	74196	(000000-)	Spring Kit, Scu [Cl]	1
▲	11	74244	(000000-)	Seal Kit, Steering [Cl]	1
▲	12	74245	(000000-)	Instr, Valve, Steering, Repair	1

Fig. 4 - Hydraulic Valve Breakdown, 1040091

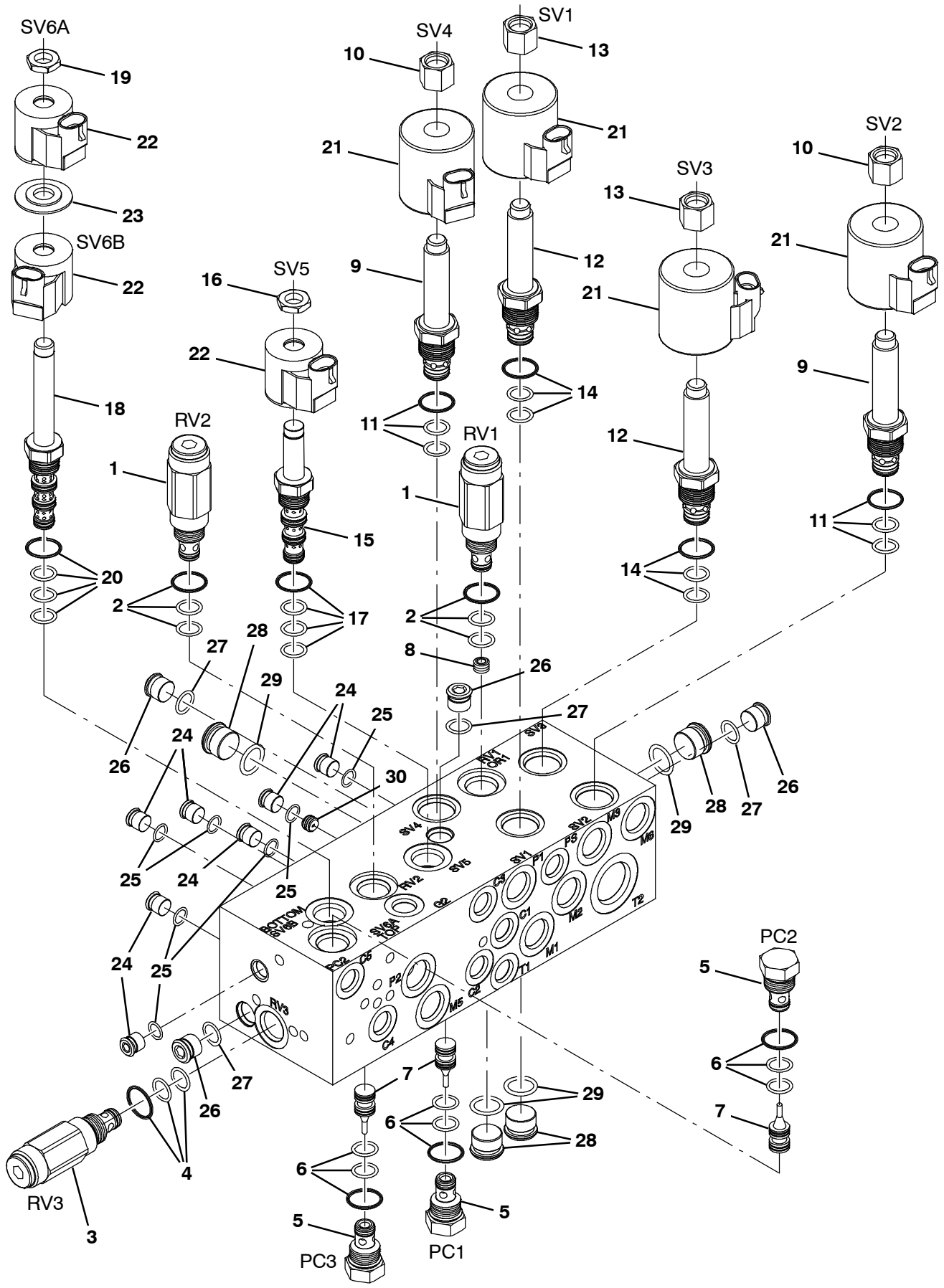

354750

Fig. 4 - Hydraulic Valve Breakdown, 1040091

	Ref.	Part No.	Serial Number	Description	Qty.
▽		1040091	(000000-)	Valve, Hyd, Solenoid, 12vdc [06s]	1
▲▽	1	373691	(000000-)	Valve, Relief	2
▲▲	2	373647	(000000-)	Seal Kit, Cartridge	1
▲▽	3	373692	(000000-)	Valve, Relief	1
▲▲	4	373647	(000000-)	Seal Kit, Cartridge	1
▲▽	5	373656	(000000-)	Valve, Check	3
▲▲	6	373647	(000000-)	Seal Kit, Cartridge	1
▲	7	373658	(000000-)	Spool, Pilot, Hyd	3
▲	8	373694	(000000-)	Plug, Orifice, Valve, Hyd, .040	1
▲▽	9	373663	(000000-)	Valve, Stem, No	2
▲▲	10	373685	(000000-)	Nut, Coil, Nyl Patch	1
▲▲	11	373646	(000000-)	Seal Kit, Cartridge	1
▲▽	12	373690	(000000-)	Valve, Stem, No	2
▲▲	13	373685	(000000-)	Nut, Coil, Nyl Patch	1
▲▲	14	373646	(000000-)	Seal Kit, Cartridge	1
▲▽	15	373657	(000000-)	Stem, Valve, Hyd [4w2p]	1
▲▲	16	373684	(000000-)	Nut, Coil, Nyl Patch	1
▲▲	17	373647	(000000-)	Seal Kit, Cartridge	1
▲▽	18	373637	(000000-)	Valve, Cntrl, Solenoid	1
▲▲	19	373684	(000000-)	Nut, Coil, Nyl Patch	1
▲▲	20	373647	(000000-)	Seal Kit, Cartridge	1
▲	21	373642	(000000-)	Solenoid, #10, 12vdc	4
▲	22	373640	(000000-)	Solenoid, #8, 12vdc	3
▲	23	373639	(000000-)	Spacer, Coil, #8	1
▲▽	24	74098	(000000-)	Fitting, Hyd, Plug, Om04	7
▲▲	25	77003	(000000-)	Seal, Org, .072 X 00.35id #04	1
▲▽	26	13904	(000000-)	Fitting, Plug, Org, #6, Valve [Cec]	4
▲▲	27	77005	(000000-)	Seal, Org, .078 X 00.47id #06	1
▲▽	28	13907	(000000-)	Fitting, Hyd, Plug, Om08	4
▲▲	29	77006	(000000-)	Seal, Org, .087 X 00.64id #08	1
▲	30	373665	(000000-)	Plug, Orifice, Valve, Hyd, .046	1

Fig. 5 - Hydraulic Valve Breakdown, 1034671

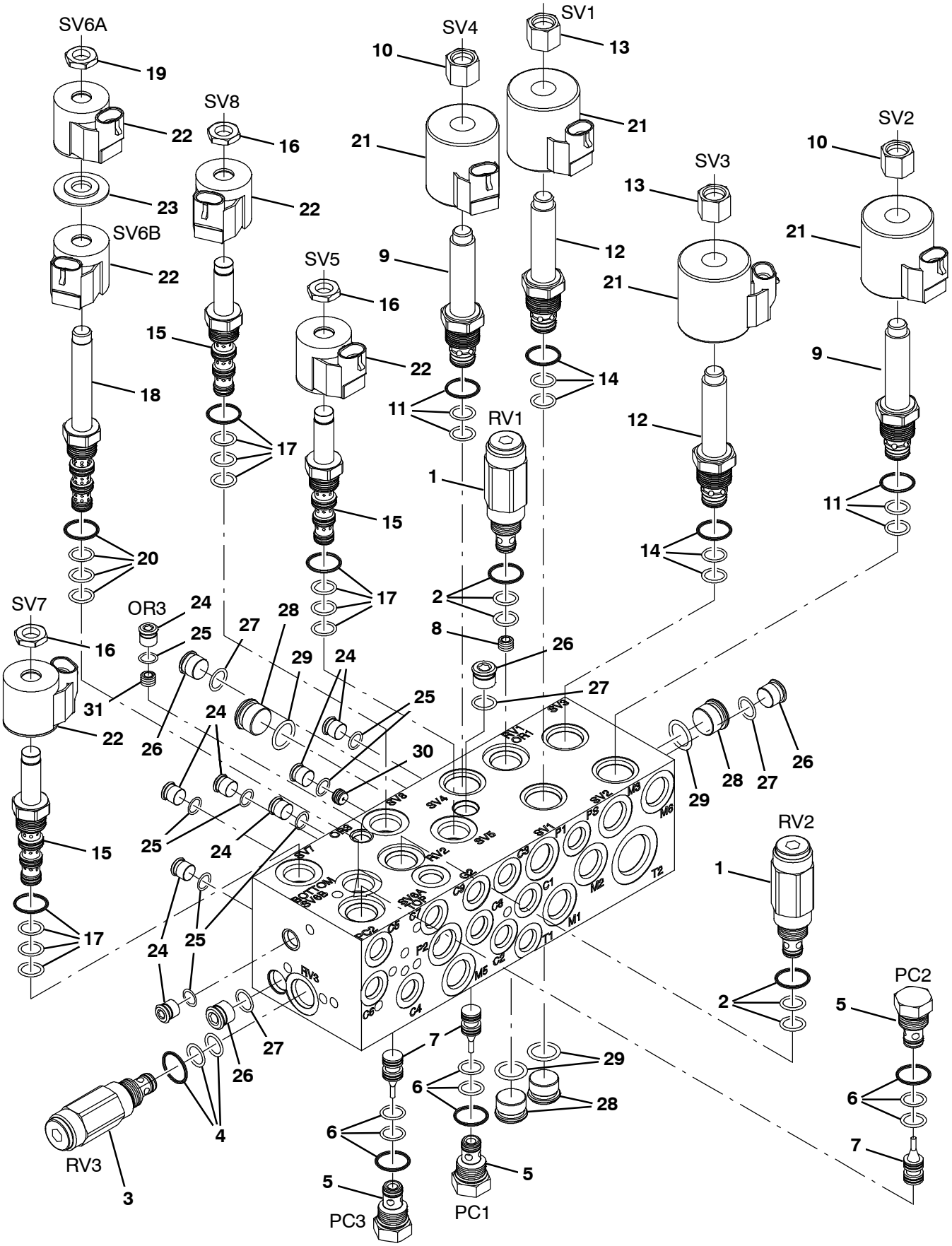

354751

Fig. 5 - Hydraulic Valve Breakdown, 1034671

	Ref.	Part No.	Serial Number	Description	Qty.
▽		1034671	(000000–)	Valve, Hyd, Solenoid, 12vdc [06s]	1
▲▽	1	373691	(000000–)	Valve, Relief	2
▲▲	2	373647	(000000–)	Seal Kit, Cartridge	1
▲▽	3	373692	(000000–)	Valve, Relief	1
▲▲	4	373647	(000000–)	Seal Kit, Cartridge	1
▲▽	5	373656	(000000–)	Valve, Check	3
▲▲	6	373647	(000000–)	Seal Kit, Cartridge	1
▲	7	373658	(000000–)	Spool, Pilot, Hyd	3
▲	8	373694	(000000–)	Plug, Orifice, Valve, Hyd, .040	1
▲▽	9	373663	(000000–)	Valve, Stem, No	2
▲▲	10	373685	(000000–)	Nut, Coil, Nyl Patch	1
▲▲	11	373646	(000000–)	Seal Kit, Cartridge	1
▲▽	12	373690	(000000–)	Valve, Stem, No	2
▲▲	13	373685	(000000–)	Nut, Coil, Nyl Patch	1
▲▲	14	373646	(000000–)	Seal Kit, Cartridge	1
▲▽	15	373657	(000000–)	Stem, Valve, Hyd [4w2p]	3
▲▲	16	373684	(000000–)	Nut, Coil, Nyl Patch	1
▲▲	17	373647	(000000–)	Seal Kit, Cartridge	1
▲▽	18	373637	(000000–)	Valve, Cntrl, Solenoid	1
▲▲	19	373684	(000000–)	Nut, Coil, Nyl Patch	1
▲▲	20	373647	(000000–)	Seal Kit, Cartridge	1
▲	21	373642	(000000–)	Solenoid, #10, 12vdc	4
▲	22	373640	(000000–)	Solenoid, #8, 12vdc	5
▲	23	373639	(000000–)	Spacer, Coil, #8	1
▲▽	24	74098	(000000–)	Fitting, Hyd, Plug, Om04	8
▲▲	25	77003	(000000–)	Seal, Org, .072 X 00.35id #04	1
▲▽	26	13904	(000000–)	Fitting, Plug, Org, #6, Valve [Cec]	4
▲▲	27	77005	(000000–)	Seal, Org, .078 X 00.47id #06	1
▲▽	28	13907	(000000–)	Fitting, Hyd, Plug, Om08	4
▲▲	29	77006	(000000–)	Seal, Org, .087 X 00.64id #08	1
▲	30	373665	(000000–)	Plug, Orifice, Valve, Hyd, .046	1
▲	31	373693	(000000–)	Plug, Orifice, Valve, Hyd, .035	1

Fig. 6 - AC and Heater Box Breakdown, 1067918

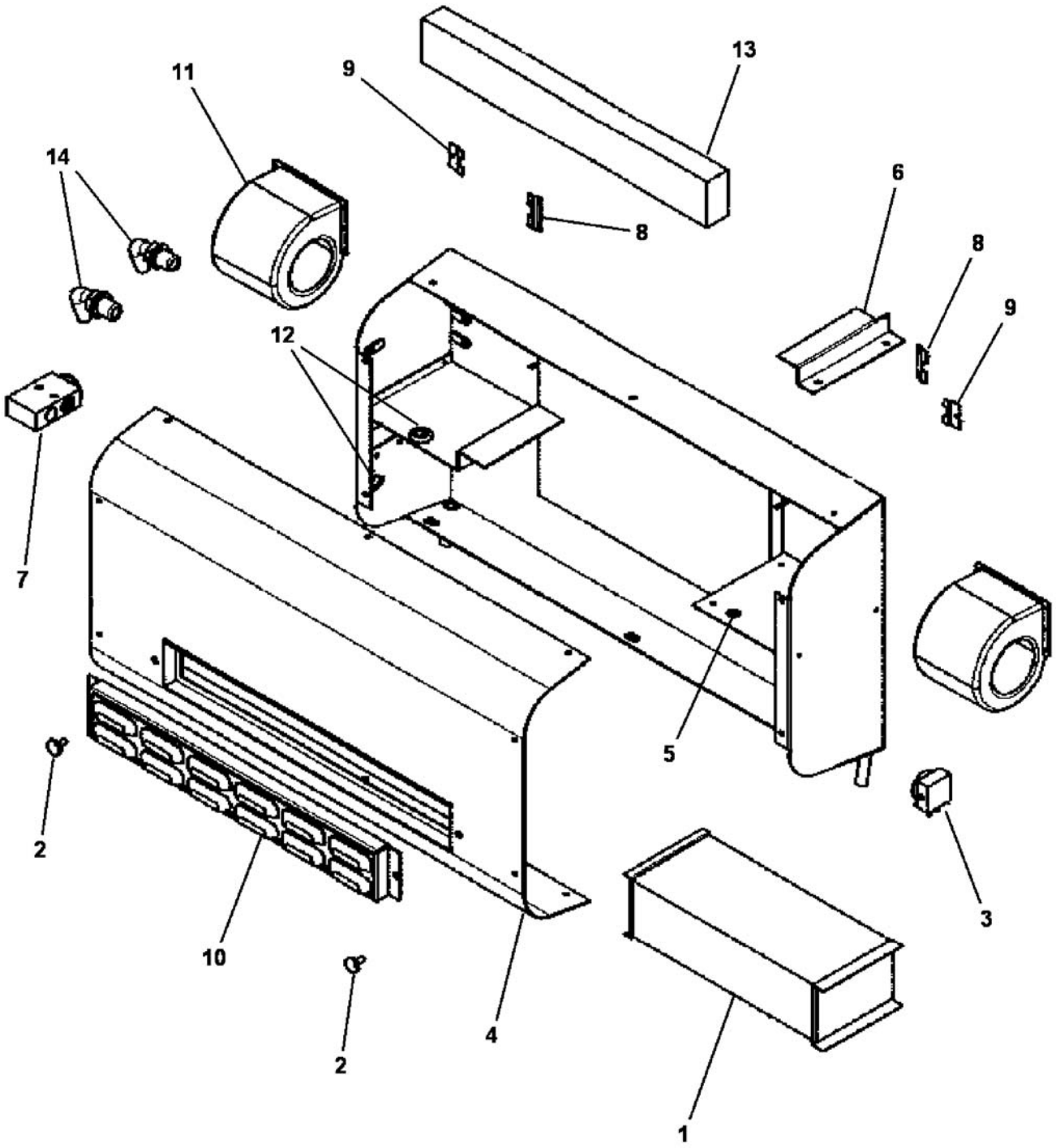

354773

Fig. 6 - AC and Heater Box Breakdown, 1067918

	Ref.	Part No.	Serial Number	Description	Qty.
▽		1067918	(000000–)	Heater & A/C Assy, W/Fan	1
▲	1	9004590	(000000–)	Coil, Heater / Evaporator	1
▲	2	9004591	(000000–)	Knob	2
▲	3	9004592	(000000–)	Thermostat, Heater/Air	1
▲	4	9004593	(000000–)	Cover	1
▲	5	9004594	(000000–)	Grommet, Rbr, .25Id .375Od	1
▲	6	9004595	(000000–)	Bracket, Coil, Mtg	1
▲	7	9004596	(000000–)	Valve, Expansion	1
▲	8	9004597	(000000–)	Clip, Keeper, Blower Mtg	2
▲	9	9004598	(000000–)	Clip, Keeper, Blower Mtg	2
▲	10	9004599	(000000–)	Cover, Access	1
▲	11	9004600	(000000–)	Blown, Fan, Motor	2
▲	12	9004601	(000000–)	Grommet, Rbr, .50Id 1.0Od	2
▲	13	9004602	(000000–)	Filter	1
▲	14	9004603	(000000–)	Fitting, E90, Bm10/Pm08	2

Fig. 7 - Hydraulic Motor Breakdown, 1027756

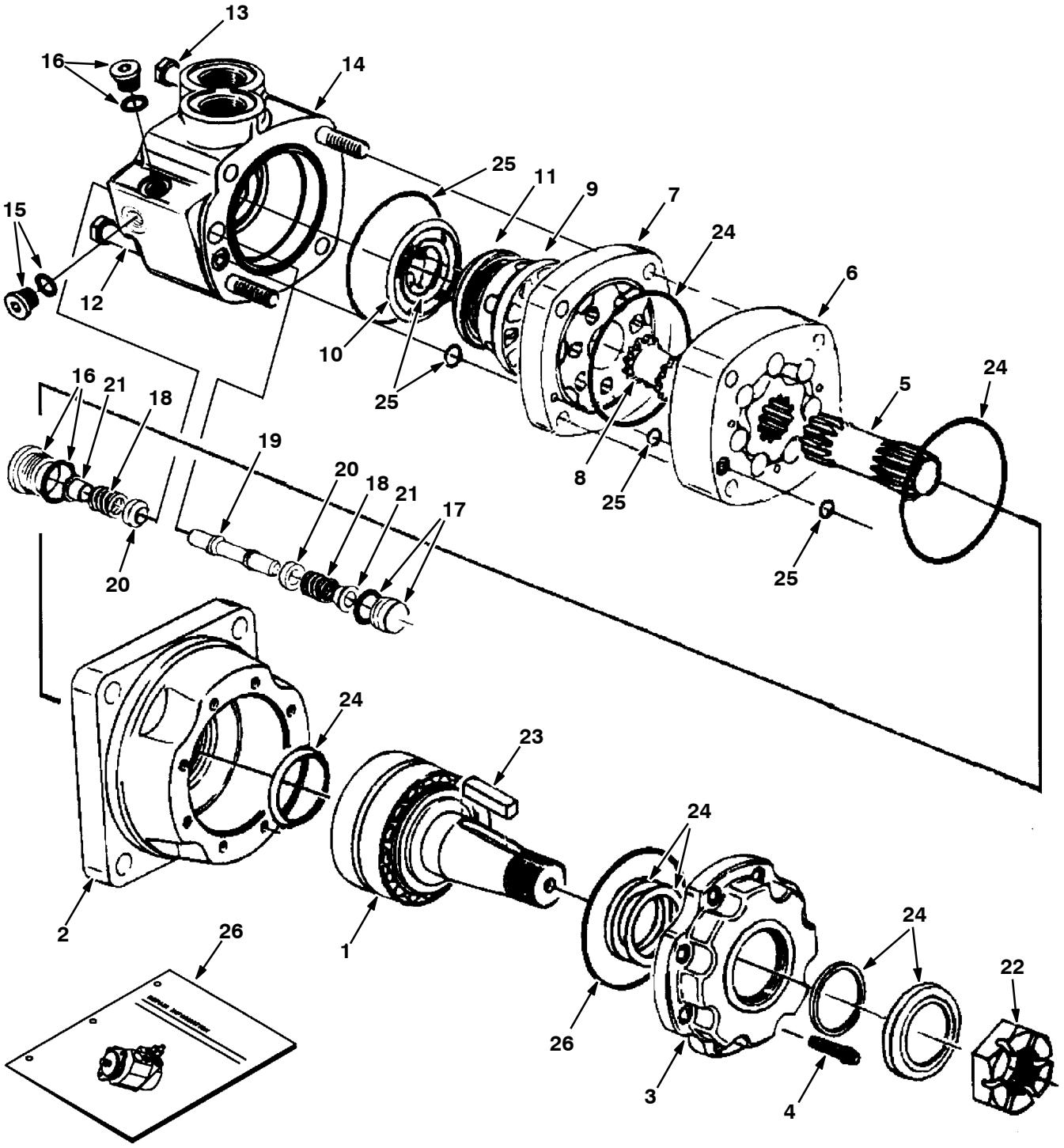

350628-09670

Fig. 7 - Hydraulic Motor Breakdown, 1027756

	Ref.	Part No.	Serial Number	Description	Qty.
▽		1027756	(000000-)	Motor, Hyd, Gear, [Int], 19.0 X 3000	1
▲	1	74165	(000000-)	Shaft, Motor, Hyd	1
▲	2	74166	(000000-)	Housing, Brg, Motor, Hyd	1
▲	3	74167	(000000-)	Retainer, Motor, Hyd	1
▲	4	74168	(000000-)	Screw, Cap, Motor, Hyd	8
▲	5	373695	(000000-)	Drive, Motor, Hyd	1
▲	6	373696	(000000-)	Geroler, Motor, Hyd	1
▲	7	74122	(000000-)	Plate, Valve, Motor, Hyd	1
▲	8	52405	(000000-)	Valve, Motor, Hyd	1
▲	9	74123	(000000-)	Valve, Motor, Hyd	1
▲	10	34178	(000000-)	Spring, Motor, Hyd	2
▲	11	38968	(000000-)	Ring, Motor, Hyd	1
▲	12	74125	(000000-)	Bolt, Motor, Hyd	3
▲	13	373697	(000000-)	Bolt, Motor, Hyd	1
▲	14	373297	(000000-)	Housing, Valve	1
▲	15	373298	(000000-)	Plug	1
▲	16	373545	(000000-)	Plug, Pump, Hyd, Gear	2
▲	17	373299	(000000-)	Plug	1
▲	18	373291	(000000-)	Spring	2
▲	19	373217	(000000-)	Piston, Pump, Hyd, Gear	1
▲	20	373226	(000000-)	Poppet, Pump, Hyd, Gear	2
▲	21	373236	(000000-)	Sleeve, Dashpo, Pump, Hyd, Gear	2
▲	22	45622	(000000-)	Nut, Motor, Hyd	1
▲	23	45623	(000000-)	Key, Motor, Hyd	1
▲	24	79828	(000000-)	Kit, Seal, Motor, Hyd	1
▲	25	33580	(000000-)	Kit, Seal, Motor, Hyd	1
	26	74249	(000000-)	Instr, Repair, Motor, Hyd, Gear	1

Fig. 8 - Hydraulic Motor Breakdown, 1054901

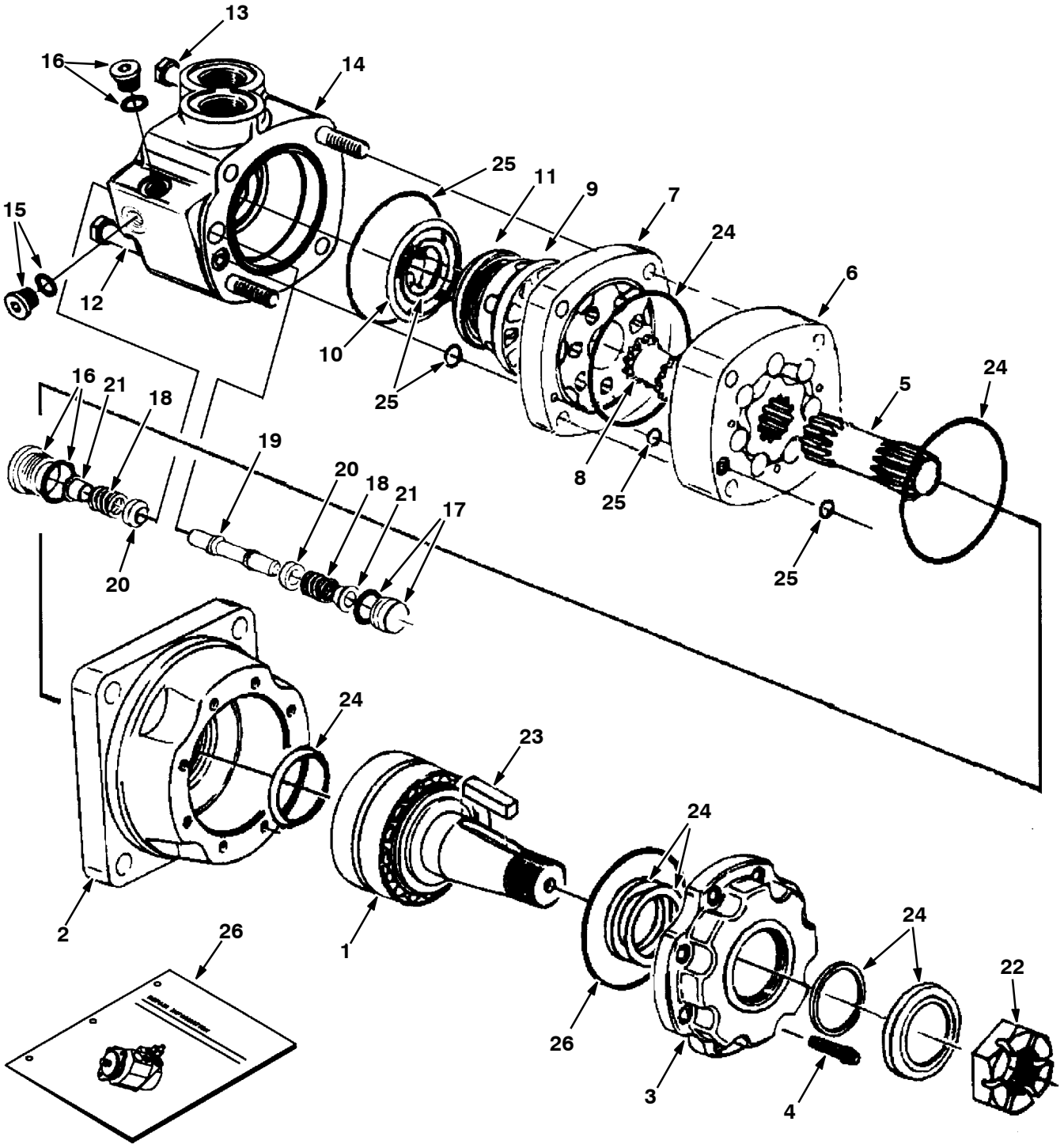

350628-09670

Fig. 8 - Hydraulic Motor Breakdown, 1054901

	Ref.	Part No.	Serial Number	Description	Qty.
▽		1054901	(000000-)	Motor, Hyd, Gear, Int 17.1 Bi-dir 3000	1
▲	1	74165	(000000-)	Shaft, Motor, Hyd	1
▲	2	74166	(000000-)	Housing, Brg, Motor, Hyd	1
▲	3	74167	(000000-)	Retainer, Motor, Hyd	1
▲	4	74168	(000000-)	Screw, Cap, Motor, Hyd	8
▲	5	373435	(000000-)	Drive, Motor, Hyd	1
▲	6	373436	(000000-)	Geroler, Motor, Hyd	1
▲	7	74122	(000000-)	Plate, Valve, Motor, Hyd	1
▲	8	52405	(000000-)	Valve, Motor, Hyd	1
▲	9	74123	(000000-)	Valve, Motor, Hyd	1
▲	10	34178	(000000-)	Spring, Motor, Hyd	2
▲	11	38968	(000000-)	Ring, Motor, Hyd	1
▲	12	373437	(000000-)	Bolt, Motor, Hyd	3
▲	13	373438	(000000-)	Bolt, Motor, Hyd	1
▲	14	373297	(000000-)	Housing, Valve	1
▲	15	373298	(000000-)	Plug	1
▲	16	373545	(000000-)	Plug, Pump, Hyd, Gear	2
▲	17	373299	(000000-)	Plug	1
▲	18	373291	(000000-)	Spring	2
▲	19	373543	(000000-)	Piston, Pump, Hyd, Gear	1
▲	20	373226	(000000-)	Poppet, Pump, Hyd, Gear	2
▲	21	373236	(000000-)	Sleeve, Dashpo, Pump, Hyd, Gear	2
▲	22	45622	(000000-)	Nut, Motor, Hyd	1
▲	23	45623	(000000-)	Key, Motor, Hyd	1
▲	24	79828	(000000-)	Kit, Seal, Motor, Hyd	1
▲	25	33580	(000000-)	Kit, Seal, Motor, Hyd	1
	26	74249	(000000-)	Instr, Repair, Motor, Hyd, Gear	1

Fig. 9 - Hydraulic Piston Pump Breakdown, 1029254

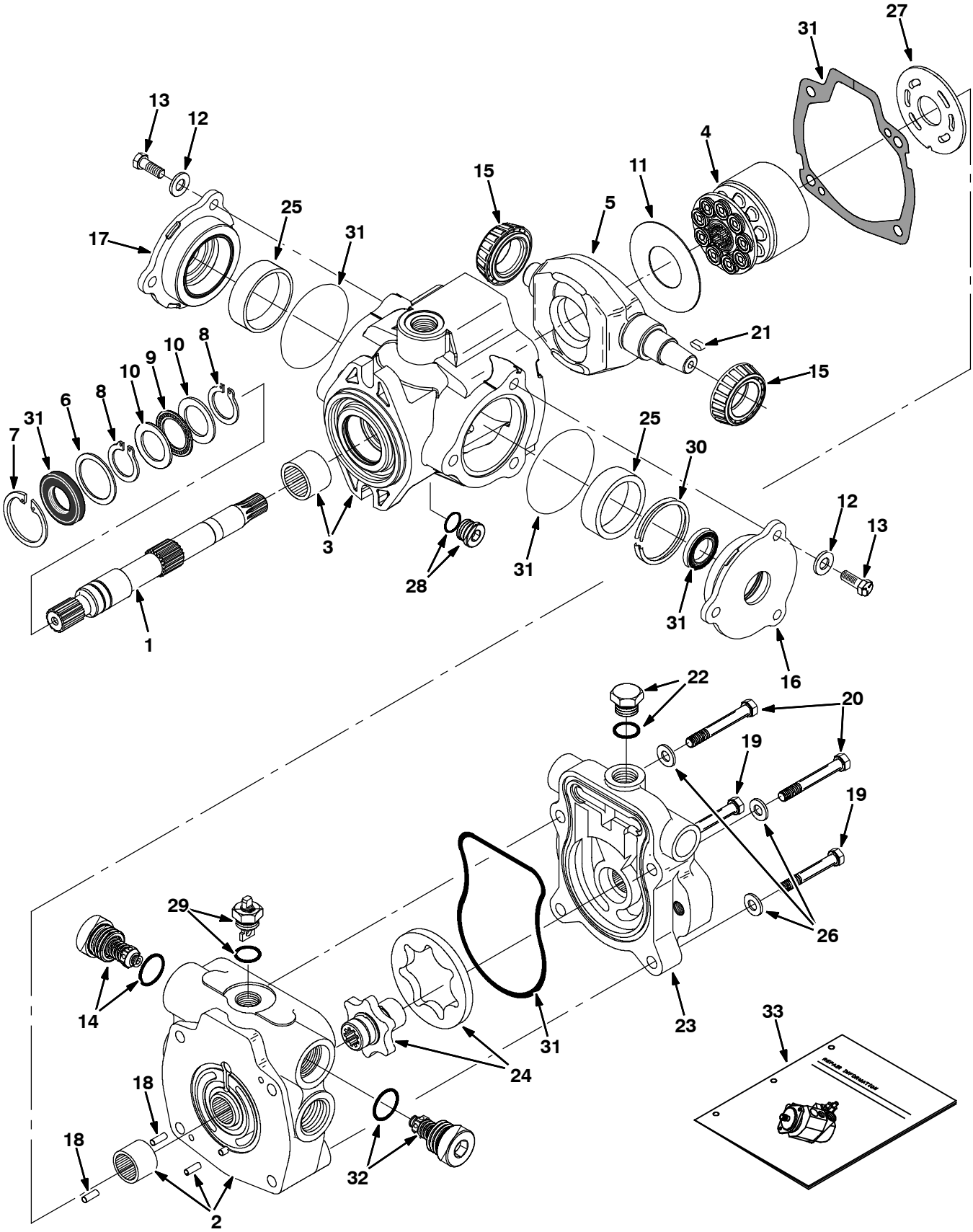

Fig. 9 - Hydraulic Piston Pump Breakdown, 1029254

	Ref.	Part No.	Serial Number	Description	Qty.
▽		1029254	(000000-)	Pump, Hyd, Piston, [V] 1.44 [R] 4000	1
▲	1	373699	(000000-)	Driveshaft, Pump, Hyd	1
▲	2	373430	(000000-)	Cover, End	1
▲	3	373389	(000000-)	Housing	1
▲	4	02706	(000000-)	Kit, Rotating, Pump, Hyd	1
▲	5	373493	(000000-)	Cam	1
▲	6	70096	(000000-)	Washer, Flt, Pump, Hyd	1
▲	7	55926	(000000-)	Ring, Retaining, Pump, Hyd	1
▲	8	373434	(000000-)	Ring, Retaining	2
▲	9	74225	(000000-)	Bearing, Thrust, Pump, Hyd	1
▲	10	74226	(000000-)	Race, Bearing, Pump, Hyd	2
▲	11	373327	(000000-)	Insert, Plate, Cam, Pump, Hyd	1
▲	12	373391	(000000-)	Washer, Pump, Hyd	6
▲	13	373346	(000000-)	Screw, Cap	6
▲	14	74259	(000000-)	Valve, Relief, Pump	1
▲	15	373317	(000000-)	Bearing, Cone, Pump, Hyd	2
▲	16	373393	(000000-)	Plate, Cover	1
▲	17	373394	(000000-)	Plate, Cover	1
▲	18	70100	(000000-)	Pin, Dowel, Pump, Hyd	2
▲	19	373336	(000000-)	Screw, Cap, Pump, Hyd	2
▲	20	373337	(000000-)	Screw, Cap, Pump, Hyd	2
▲	21	74237	(000000-)	Key, Shaft, Pump, Hyd	1
▲	22	13907	(000000-)	Fitting, Plug, O-Ring	1
▲	23	373700	(000000-)	Adaptor Assy, Pump, Hyd	1
▲	24	373701	(000000-)	Gerotor, Pump, Hyd	1
▲	25	373395	(000000-)	Bearing, Cup	2
▲	26	373396	(000000-)	Washer	4
▲	27	74180	(000000-)	Plate, Valve, Pump, Hyd	1
▲	28	13907	(000000-)	Fitting, Plug, O-Ring	1
▲	29	373413	(000000-)	Actuator, Valve, Bypass	1
▲	30	373402	(000000-)	Kit, Shim	1
▲	31	373398	(000000-)	Kit, Seal, Hyd, Pump	1
▲	32	373678	(000000-)	Valve, Relief, 3000psi	1
	33	373429	(000000-)	Instr, Repair, Pump	1

Fig. 10 - Hydraulic Piston Pump Breakdown, 1054905

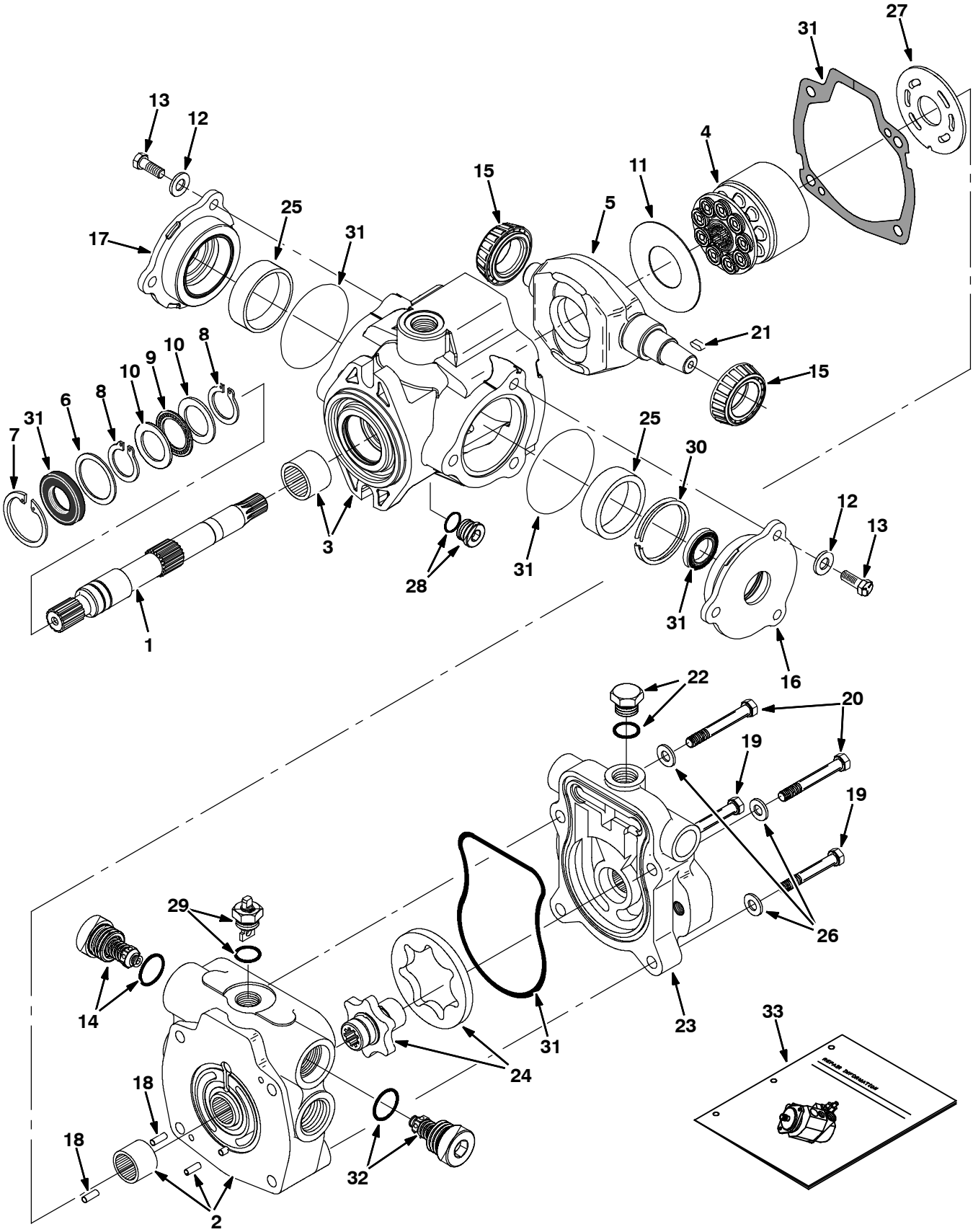

Fig. 10 - Hydraulic Piston Pump Breakdown, 1054905

	Ref.	Part No.	Serial Number	Description	Qty.
▽		1054905	(000000-)	Pump, Hyd, Piston, Var, 1.24 4500, Cw	1
▲	1	373699	(000000-)	Driveshaft, Pump, Hyd	1
▲	2	373430	(000000-)	Cover, End	1
▲	3	373389	(000000-)	Housing	1
▲	4	02706	(000000-)	Kit, Rotating, Pump, Hyd	1
▲	5	373493	(000000-)	Cam	1
▲	6	70096	(000000-)	Washer, Flt, Pump, Hyd	1
▲	7	55926	(000000-)	Ring, Retaining, Pump, Hyd	1
▲	8	373434	(000000-)	Ring, Retaining	2
▲	9	74225	(000000-)	Bearing, Thrust, Pump, Hyd	1
▲	10	74226	(000000-)	Race, Bearing, Pump, Hyd	2
▲	11	373327	(000000-)	Insert, Plate, Cam, Pump, Hyd	1
▲	12	373391	(000000-)	Washer, Pump, Hyd	6
▲	13	373346	(000000-)	Screw, Cap	6
▲	14	74259	(000000-)	Valve, Relief, Pump	1
▲	15	373317	(000000-)	Bearing, Cone, Pump, Hyd	2
▲	16	373393	(000000-)	Plate, Cover	1
▲	17	373394	(000000-)	Plate, Cover	1
▲	18	70100	(000000-)	Pin, Dowel, Pump, Hyd	2
▲	19	373336	(000000-)	Screw, Cap, Pump, Hyd	2
▲	20	373337	(000000-)	Screw, Cap, Pump, Hyd	2
▲	21	74237	(000000-)	Key, Shaft, Pump, Hyd	1
▲	22	13907	(000000-)	Fitting, Plug, O-Ring	1
▲	23	373700	(000000-)	Adaptor Assy, Pump, Hyd	1
▲	24	373701	(000000-)	Gerotor, Pump, Hyd	1
▲	25	373395	(000000-)	Bearing, Cup	2
▲	26	373396	(000000-)	Washer	4
▲	27	74180	(000000-)	Plate, Valve, Pump, Hyd	1
▲	28	13907	(000000-)	Fitting, Plug, O-Ring	1
▲	29	373413	(000000-)	Actuator, Valve, Bypass	1
▲	30	373402	(000000-)	Kit, Shim	1
▲	31	373398	(000000-)	Kit, Seal, Hyd, Pump	1
▲	32	373431	(000000-)	Valve, Relief, 3500psi	1
	33	373429	(000000-)	Instr, Repair, Pump	1

Fig. 11 - Hydraulic Piston Pump Breakdown, 1029255

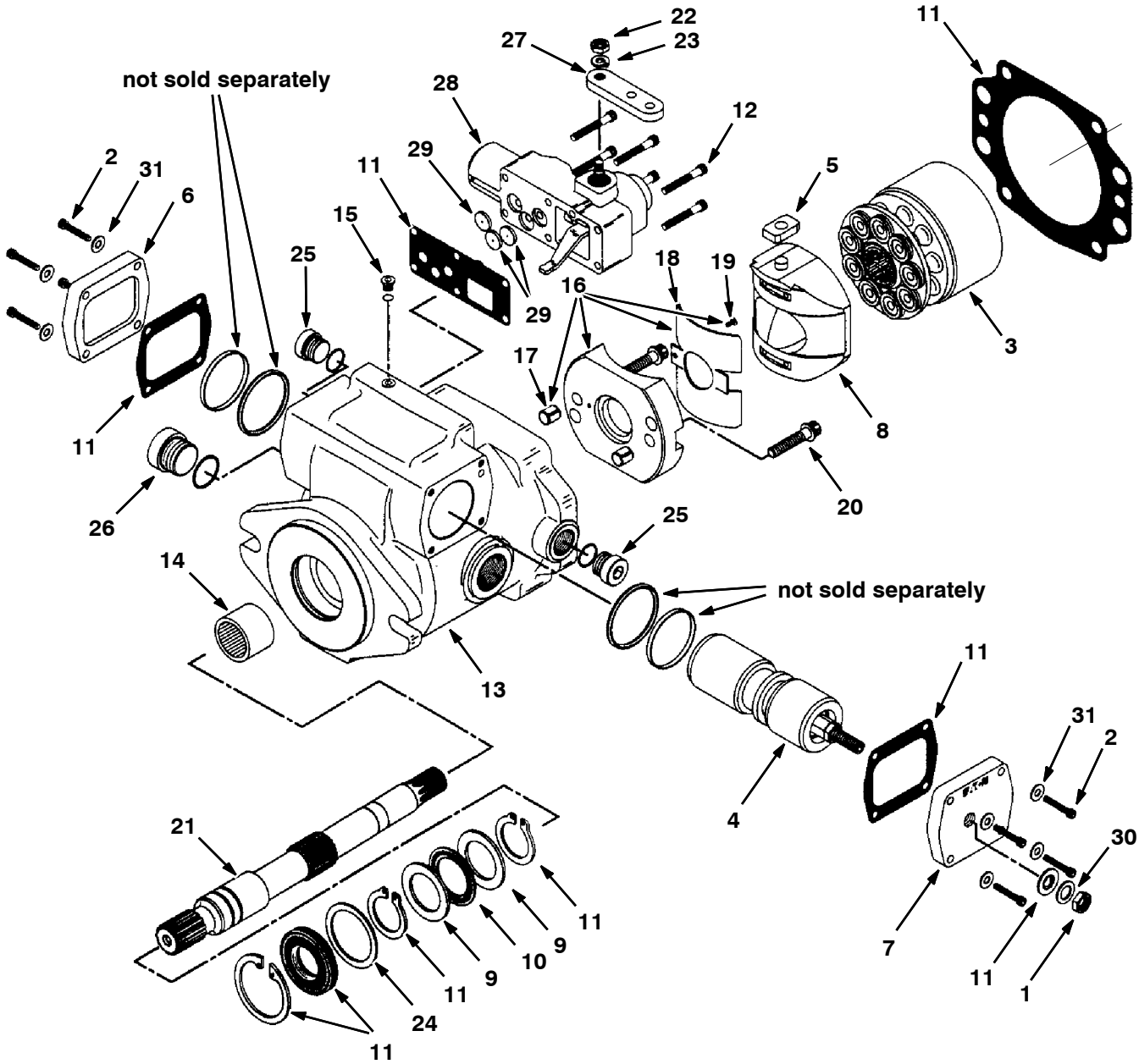

10136

Fig. 11 - Hydraulic Piston Pump Breakdown, 1029255

NOTE: Piston Pump, TENNANT Part Number 1029255, includes.Fig. 11, Fig. 12 and Fig. 13.

	Ref.	Part No.	Serial Number	Description	Qty.
	1	74184	(000000-)	Nut, Jam	1
	2	74223	(000000-)	Screw, Cap	8
	3	61882	(000000-)	Rotating Kit	1
	4	373407	(000000-)	Piston, Servo	1
	5	74254	(000000-)	Follower, Piston	1
	6	74256	(000000-)	Plate, Cover En	1
	7	74257	(000000-)	Plate, Cover En	1
	8	74258	(000000-)	Camplate S/A En	1
	9	74240	(000000-)	Race, Bearing Ce	2
	10	74210	(000000-)	Bearing	1
	11	373720	(000000-)	Seal Kit, Pump En	1
	12	74262	(000000-)	Screw, Cap En	6
▽		373408	(000000-)	Housing S/A En	1
▲	13	373409	(000000-)	Housing En	1
▲	14	37462	(000000-)	Bearing	1
▲	15	79742	(000000-)	Plug S/A En	1
▽	16	373410	(000000-)	Cradle Sub Assy En	1
▲	17	373218	(000000-)	Dowel Bushing En	2
▲	18	373414	(000000-)	Bushing En	1
▲	19	373415	(000000-)	Cap Screw En	1
	20	79747	(000000-)	Cap Screw En	2
	21	74265	(000000-)	Shaft, Drive Sp En	1
	22	74266	(000000-)	Nut En	1
	23	74267	(000000-)	Lockwasher En	1
	24	37460	(000000-)	Washer	1
	25	13907	(000000-)	Plug #8	2
	26	79779	(000000-)	Plug,#12 O-Ring Ph	1
	27	74272	(000000-)	Arm, Control En	1
	28	74273	(000000-)	Control, Manual (See Breakdowns)	1
	29	74276	(000000-)	Orifice, Valve En	3
	30	74280	(000000-)	Washer En	1
	31	74281	(000000-)	Washer En	8

Fig. 12 - Hydraulic Piston Pump Breakdown, 1029255

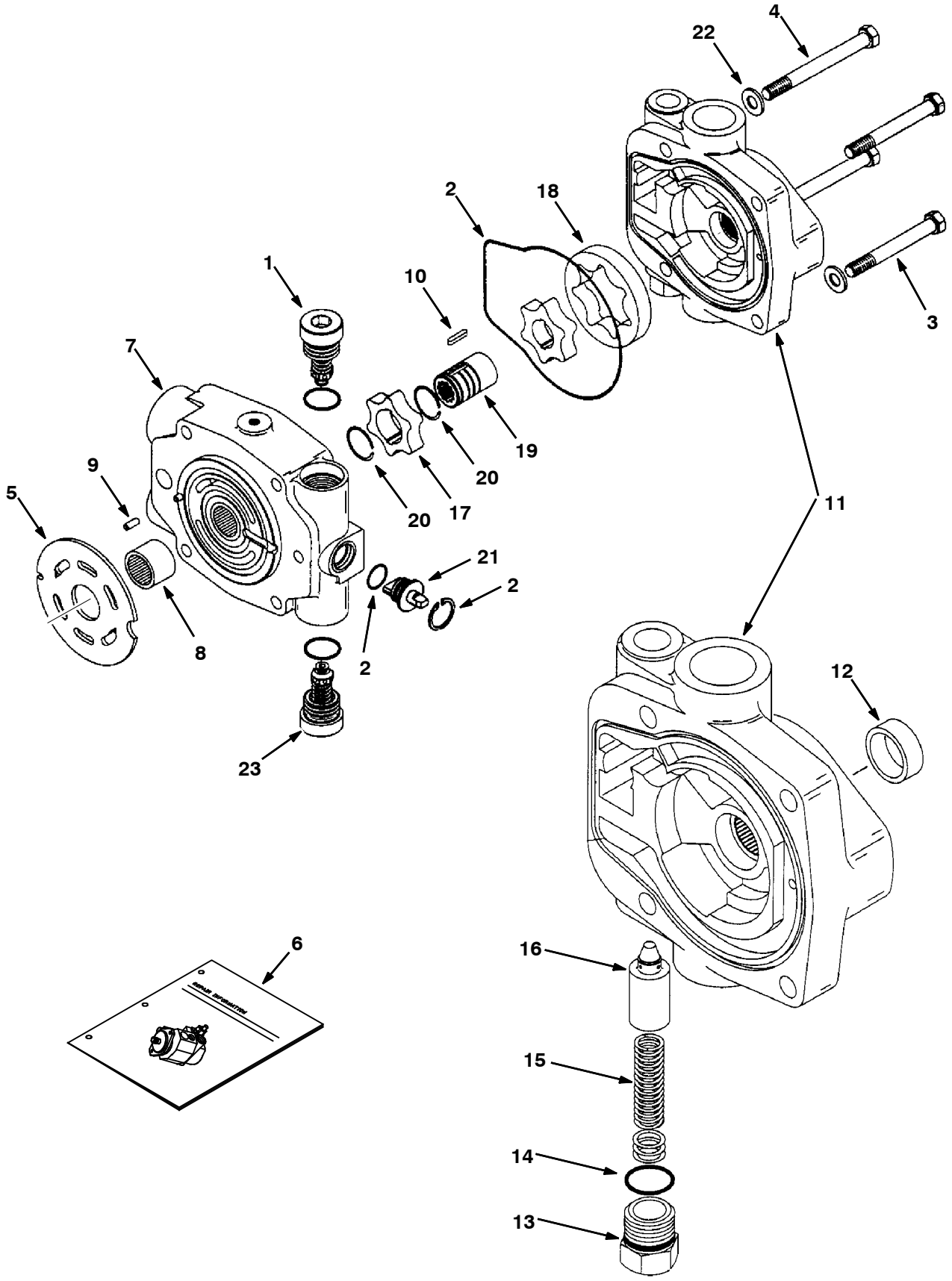

10136,09670

Fig. 12 - Hydraulic Piston Pump Breakdown, 1029255

NOTE: Piston Pump, TENNANT Part Number 1029255, includes .Fig. 11, Fig. 12 and Fig. 13.

	Ref.	Part No.	Serial Number	Description	Qty.
	1	74259	(000000–)	Relief Valve Sa En	1
	2	373720	(000000–)	Seal Kit, Pump En	1
	3	373374	(000000–)	Screw, Cap En	2
	4	373375	(000000–)	Screw, Cap En	2
	5	61886	(000000–)	Valve Plate	1
	6	373406	(000000–)	Repair Info,Pmp En	1
▽	7	373412	(000000–)	Backplate S/A En	1
▲	8	34159	(000000–)	Bearing	1
▲	9	79748	(000000–)	Roll Pin En	1
	10	373703	(000000–)	Key En	1
▽	11	74271	(000000–)	Charge Pmp Adap En	1
▲	12	79749	(000000–)	Bushing En	1
▲	13	79750	(000000–)	Plug En	1
▲	14	79751	(000000–)	Shims En	1
▲	15	79752	(000000–)	Spring En	1
▲	16	79753	(000000–)	Poppet En	1
	17	74274	(000000–)	Geroter,Ring In En	1
	18	74275	(000000–)	Geroter,Ring Ot En	1
	19	74277	(000000–)	Coupler En	1
	20	74278	(000000–)	Ring, Retaining En	2
	21	373413	(000000–)	Actuator, Valve En	1
	22	74282	(000000–)	Washer En	4
	23	373678	(000000–)	Valve, Relief, 3000psi	1

Fig. 13 - Hydraulic Manual Control Breakdown, 74273

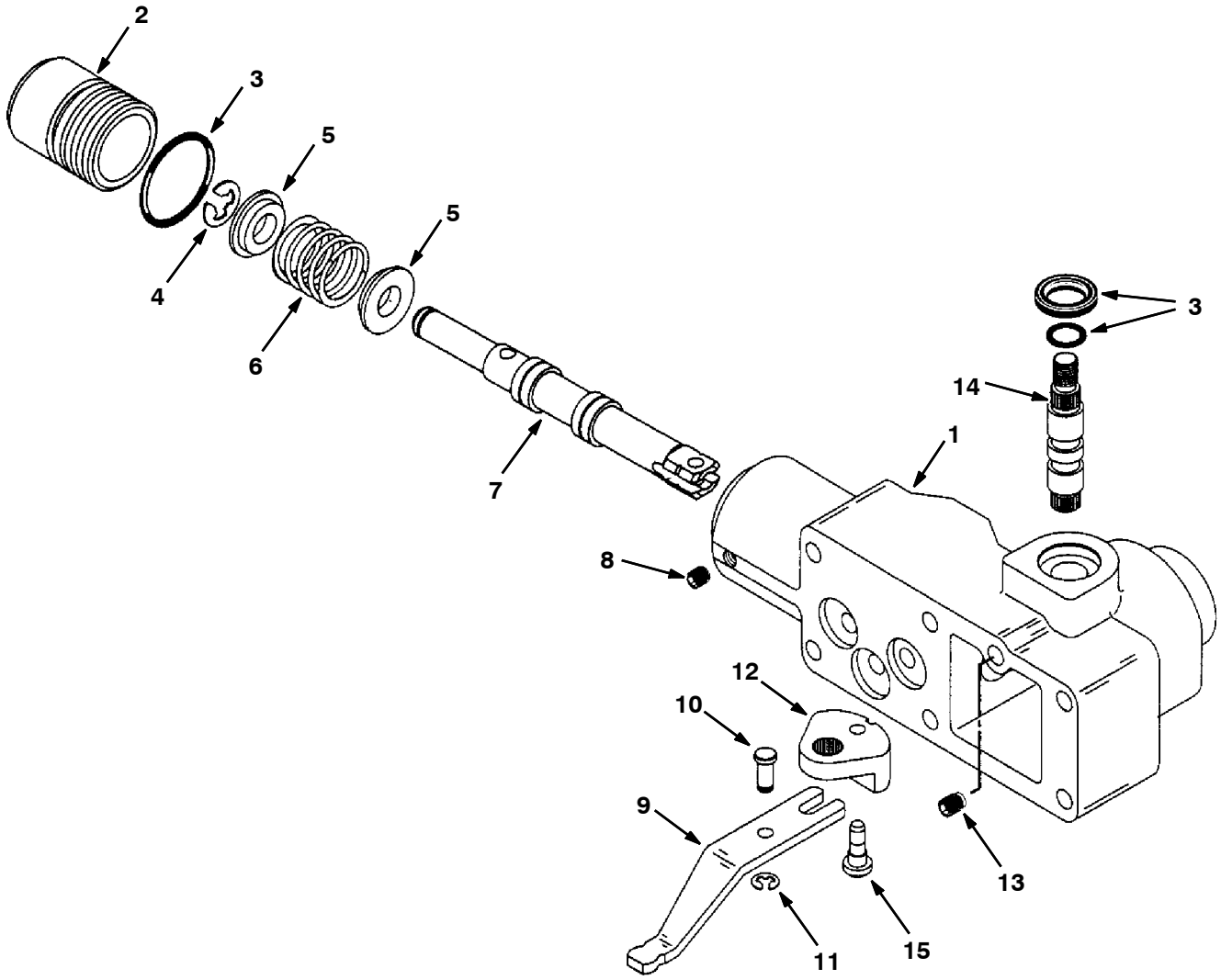

10134

Fig. 13 - Hydraulic Manual Control Breakdown, 74273

NOTE: Piston Pump, TENNANT Part Number 1029255, includes .Fig. 11, Fig. 12 and Fig. 13.

	Ref.	Part No.	Serial Number	Description	Qty.
▽		74273	(000000–)	Control, Manual	1
▲	1	79754	(000000–)	Housing,Control	1
▲	2	79755	(000000–)	Plug	1
▲	3	79776	(000000–)	Seal Kit,Cntrl	1
▲	4	79756	(000000–)	Ring, Retaining	1
▲	5	79757	(000000–)	Spring,Retainer	2
▲	6	79758	(000000–)	Spring, Cntr	1
▲	7	79759	(000000–)	Valve Spool	1
▲	8	79760	(000000–)	Screw, Set	1
▲	9	79761	(000000–)	Link, Feedback	1
▲	10	79762	(000000–)	Dowel Pin	1
▲	11	79763	(000000–)	Ring, Retaining	1
▲	12	79764	(000000–)	Bell Crank	1
▲	13	79765	(000000–)	Screw, Set	1
▲	14	79766	(000000–)	Shaft, Input	1
▲	15	79767	(000000–)	Pin, Headed	1

Fig. 14 - Hydraulic Flow Divider Valve Breakdown, 1033685

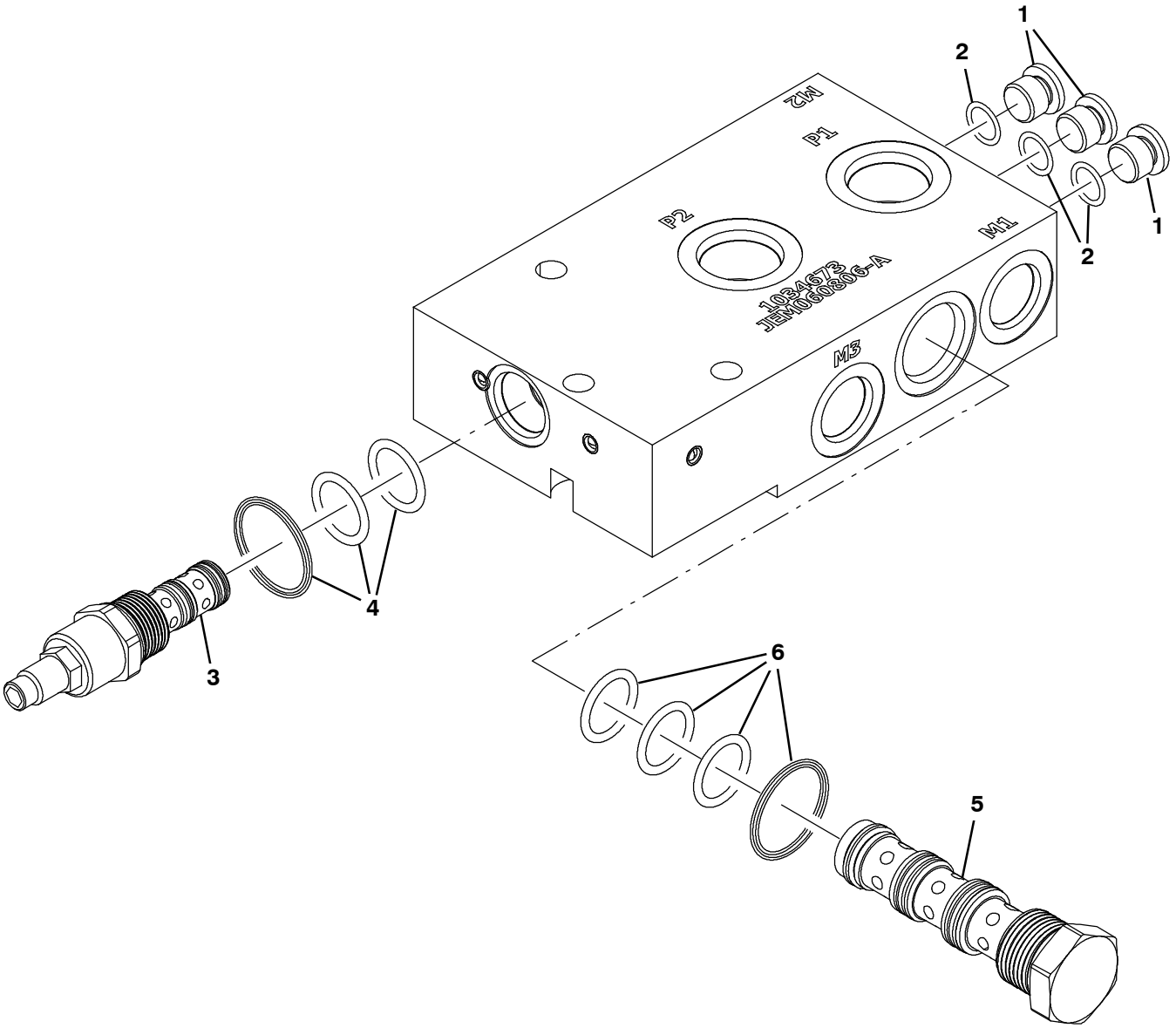

354823

	Ref.	Part No.	Serial Number	Description	Qty.
▽		1033685	(000000–)	Valve, Hyd, Flow Divider, Propel [4w]	1
▲▽	1	13904	(000000–)	Fitting, Plug, Org, #6, Valve [Cec]	3
▲▲	2	77005	(000000–)	Seal, Org, .078 X 00.47id 06	1
▲▽	3	373705	(000000–)	Valve, Hyd, Flow Cntrl	1
▲▲	4	373646	(000000–)	Seal Kit, Cartridge	1
▲▽	5	373706	(000000–)	Valve, Hyd, Flow Divider	1
▲▲	6	373655	(000000–)	Seal Kit, Cartridge	1

SECTION 5

Contents **Page**

Fig. 1 – Crankcase Group 5-2
Fig. 2 – Oil Pan Group 5-4
Fig. 3 – Cylinder Head Group 5-5
Fig. 4 – Gear Case Group 5-6
Fig. 5 – Water Pump Group 5-8
Fig. 6 – Main Bearing Case Group 5-9
Fig. 7 – Head Cover Group 5-10
Fig. 8 – Manifold Group 5-11
Fig. 9 – Valve, Rocker Arm Group 5-12
Fig. 10 – Fuel Camshaft Group 5-13
Fig. 11 – Camshaft Group 5-14
Fig. 12 – Piston and Crankshaft Group 5-16
Fig. 13 – Flywheel Group 5-18
Fig. 14 – Starter Breakdown, 74405 5-20
Fig. 15 – Nozzle Holder and
Glow Plug Group 5-22
Fig. 16 – Injection Pump Group 5-24
Fig. 17 – Injection Pump Breakdown 5-26
Fig. 18 – Idling Group 5-28
Fig. 19 – Speed Control Plate Group 5-29
Fig. 20 – Governor Group 5-30
Fig. 21 – Water Flange Group 5-31

Fig. 1 - Crankcase Group

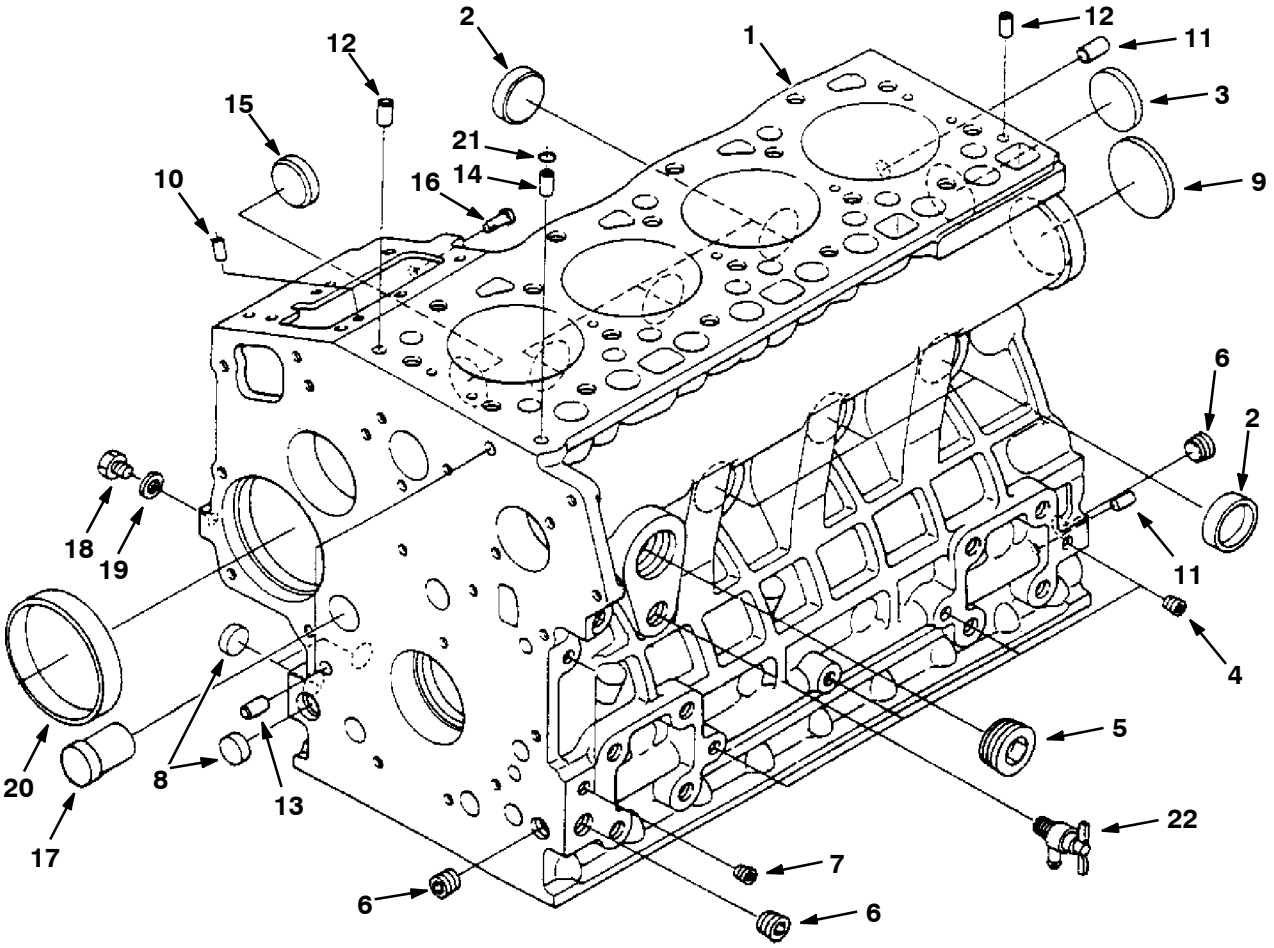

07406 - M20, D

Fig. 1 - Crankcase Group

	Ref.	Part No.	Description	Qty.
▽	1	372920	Crankcase, Complt	1
▲	2	70998	Cap, Sealing	6
▲	3	39087	Cap, Sealing	1
▲	4	39088	Plug	4
▲	5	84647	Plug	1
▲	6	71985	Plug	3
▲	7	39051	Plug	2
▲	8	361436	Plug, Expansion	3
▲	9	71986	Plug, Expansion	1
▲	10	71987	Pin, Straight	2
▲	11	71988	Pin, Straight	2
▲	12	71989	Pin, Straight	2
▲	13	71990	Pin, Pipe	2
▲	14	71991	Pin, Pipe	1
▲	15	71992	Plug	1
▲	16	39105	Pin, Start Spring	1
▲	17	71993	Plug	1
▲	18	39062	Plug	1
▲	19	10895	Gasket	1
▲	20	70887	Bush, Governor Gear	1
	21	39063	O-Ring	1
	22	70888	Assembly Cock, Drain	1

Fig. 2 - Oil Pan Group

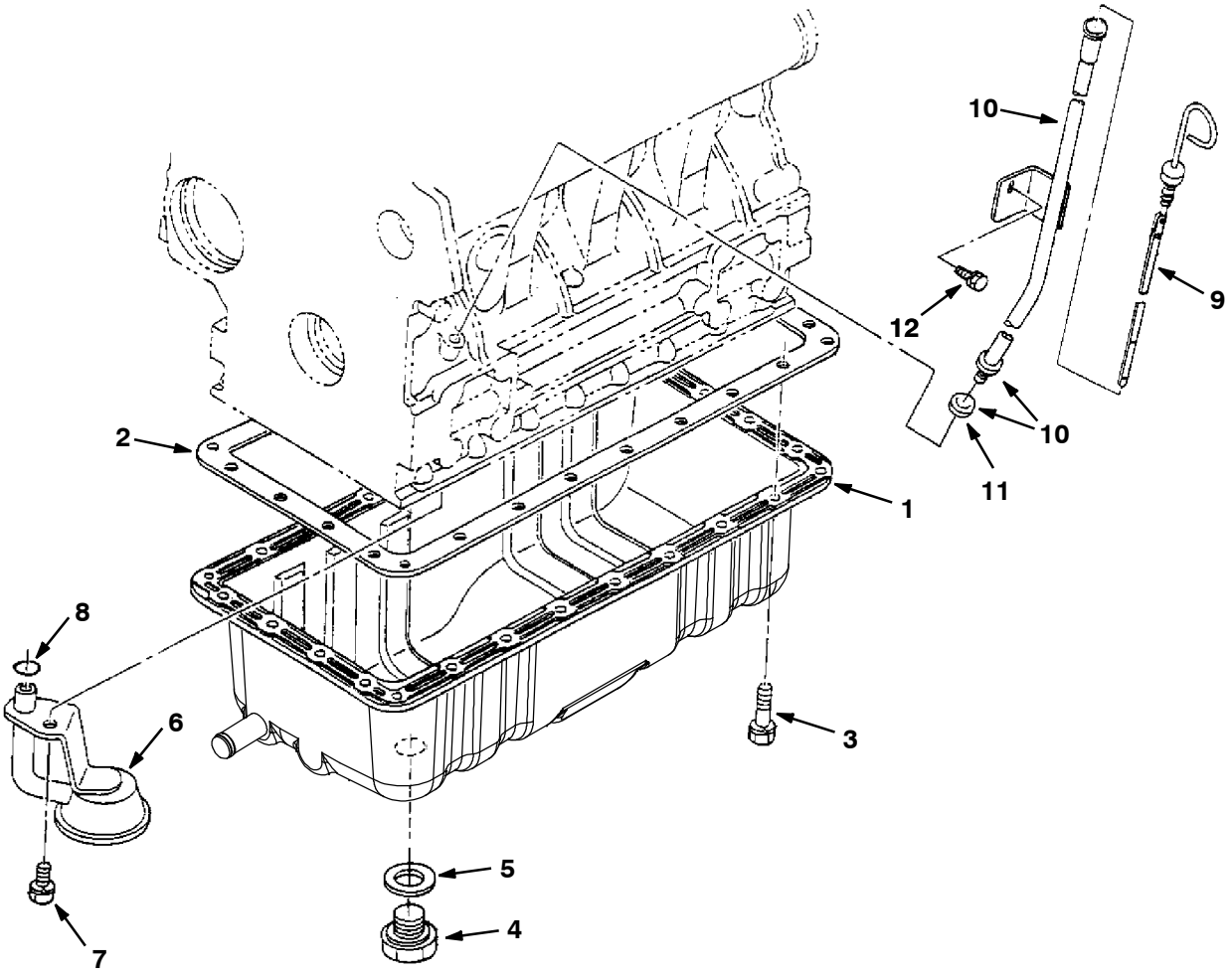

07409 - M20, D

	Ref.	Part No.	Description	Qty.
	1	1023144	Comp. Oil Pan (Rear Sump)	1
	2	70889	Gasket, Oil Pan	1
	3	71995	Bolt	26
	4	70890	Plug, Drain	1
	5	70891	Gasket	1
	6	9006001	Pump, Oil, Pickup [Sump, Ku]	1
	7	39094	Bolt	1
	8	41792	O-Ring	1
	9	70893	Gauge, Oil	1
▽	10	361428	Guide Assy, Oil Gauge	1
▲	11	361366	O-Ring	1
	12	39073	Bolt	1
		66187	Gasket Set, Lower	1

Fig. 3 - Cylinder Head Group

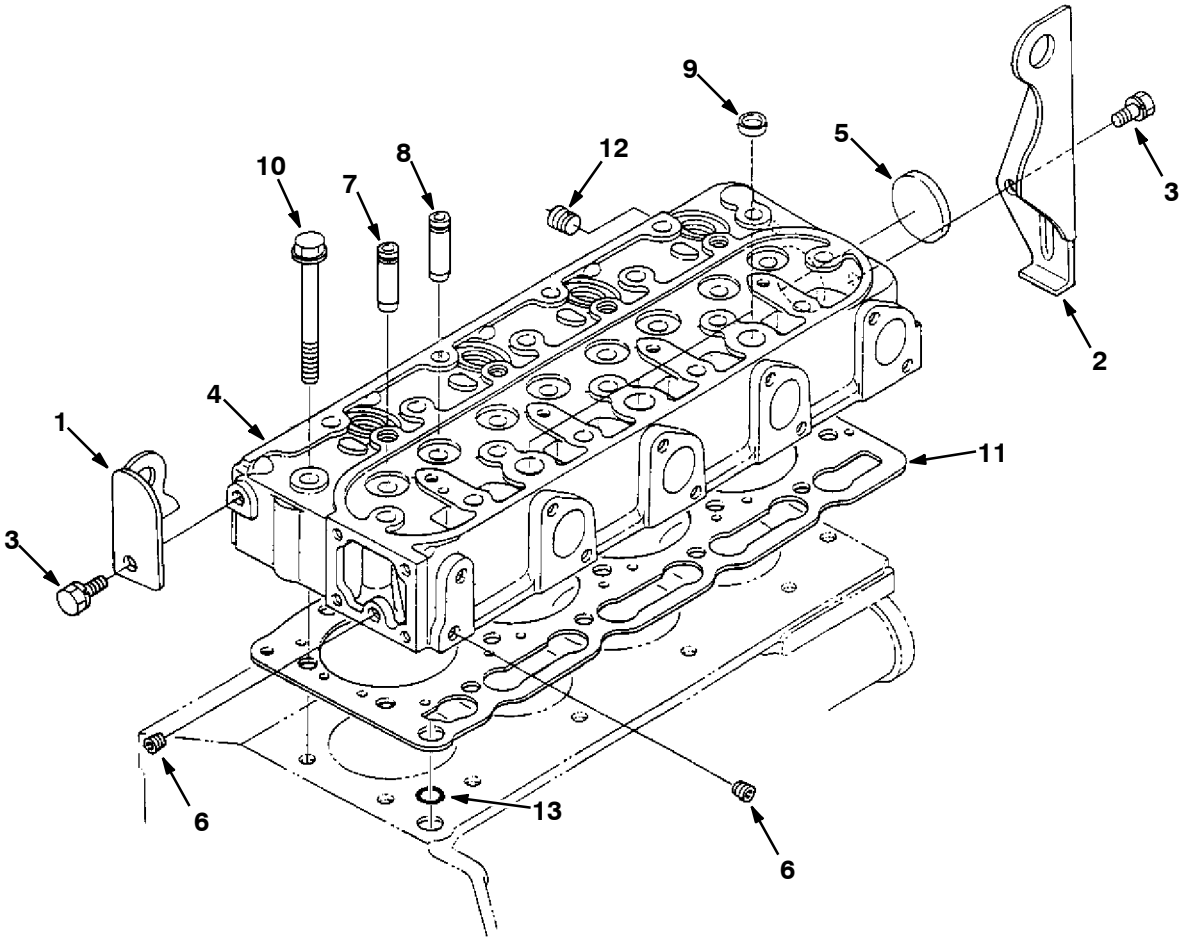

07411 - M20, D

	Ref.	Part No.	Description	Qty.
	1	71996	Hook, Engine 1	1
	2	71997	Hook, Engine 2	1
	3	39073	Bolt	2
	4	84631	Head, Cyl, W/O Valves	1
▽	4	372921	Head, Cyl	1
▲	5	51331	Cap, Sealing	1
▲	6	39088	Plug	2
▲	7	70895	Guide, Inlet Valve	4
▲	8	70896	Guide, Exhaust Valve	4
▲	9	71999	Cap, Sealing	3
	10	70897	Bolt, Cylinder Head	18
	11	70899	Gasket, Cyclinder Head	1
		66194	Gasket Set, Upper	1
	12	72010	Plug	1
	13	39063	O-Ring	1

Fig. 4 - Gear Case Group

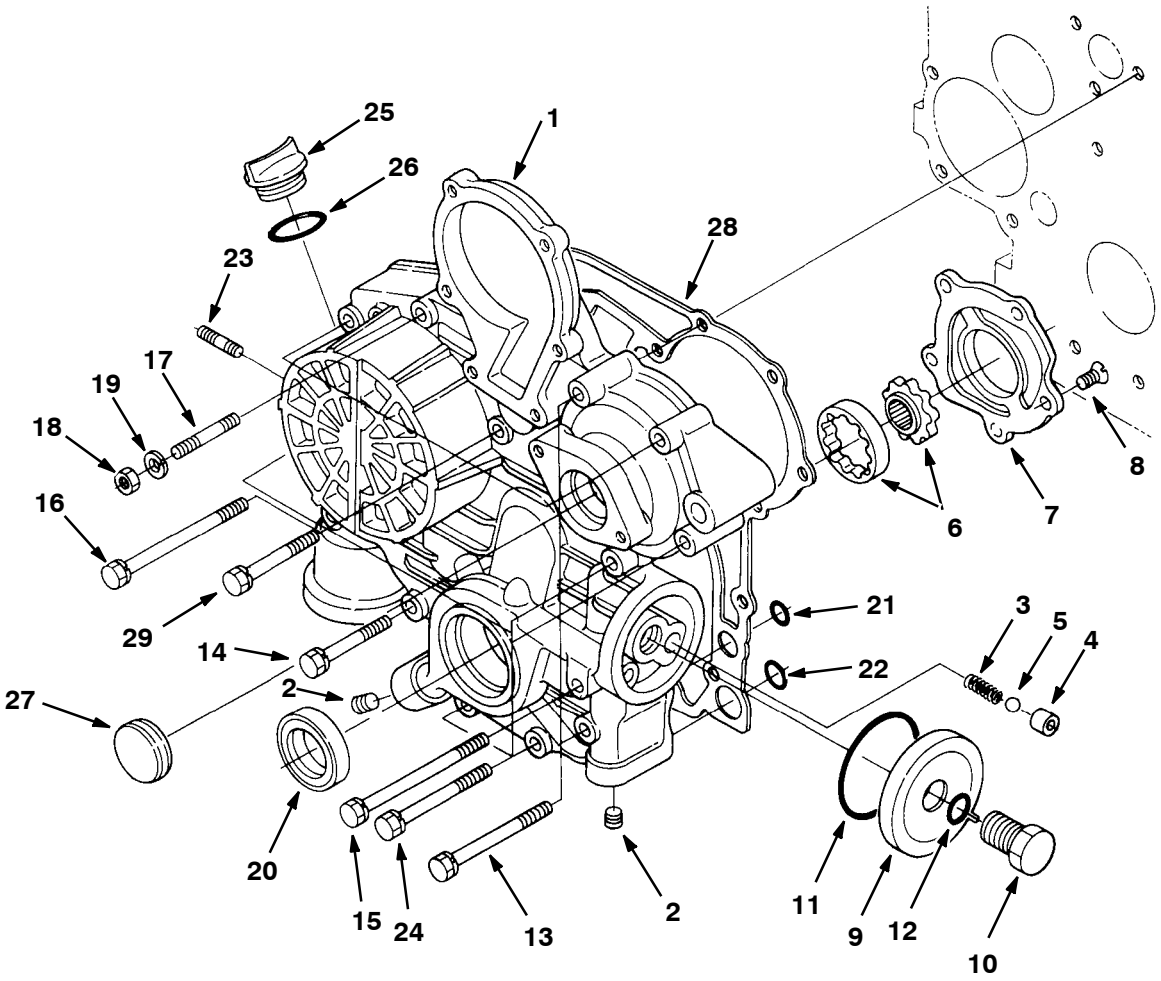

07413 - M20, D

Fig. 4 - Gear Case Group

	Ref.	Part No.	Description	Qty.
▽	1	72011	Comp. Case, Gear	1
▲	2	72012	Plug	4
▲	3	70900	Spring	1
▲	4	70901	Seat, Valve	1
▲	5	70902	Ball	1
▲	6	70903	Assembly Rotor, Oil Pump	1
▲	7	70904	Cover, Oil Pump	1
▲	8	72013	Screw	5
▲	9	70905	Cover	1
▲	10	70906	Bolt	1
▲	11	70907	O-Ring	1
▲	12	39103	O-Ring	1
	13	72995	Bolt	2
	14	72014	Bolt	1
	15	72015	Bolt	2
	16	72016	Bolt	1
	17	72017	Stud	1
	18	39121	Nut	1
	19	39065	Washer, Spring	1
	20	70909	Seal, Oil	1
	21	70910	O-Ring	2
	22	70911	O-Ring	2
	23	72018	Stud	2
	24	72994	Bolt	4
	25	39161	Oil Filter, Plug	1
	26	70913	O-Ring	1
	27	70189	Cover	1
	28	70912	Gasket, Gear Case	1
	29	72993	Bolt	3

Fig. 5 - Water Pump Group

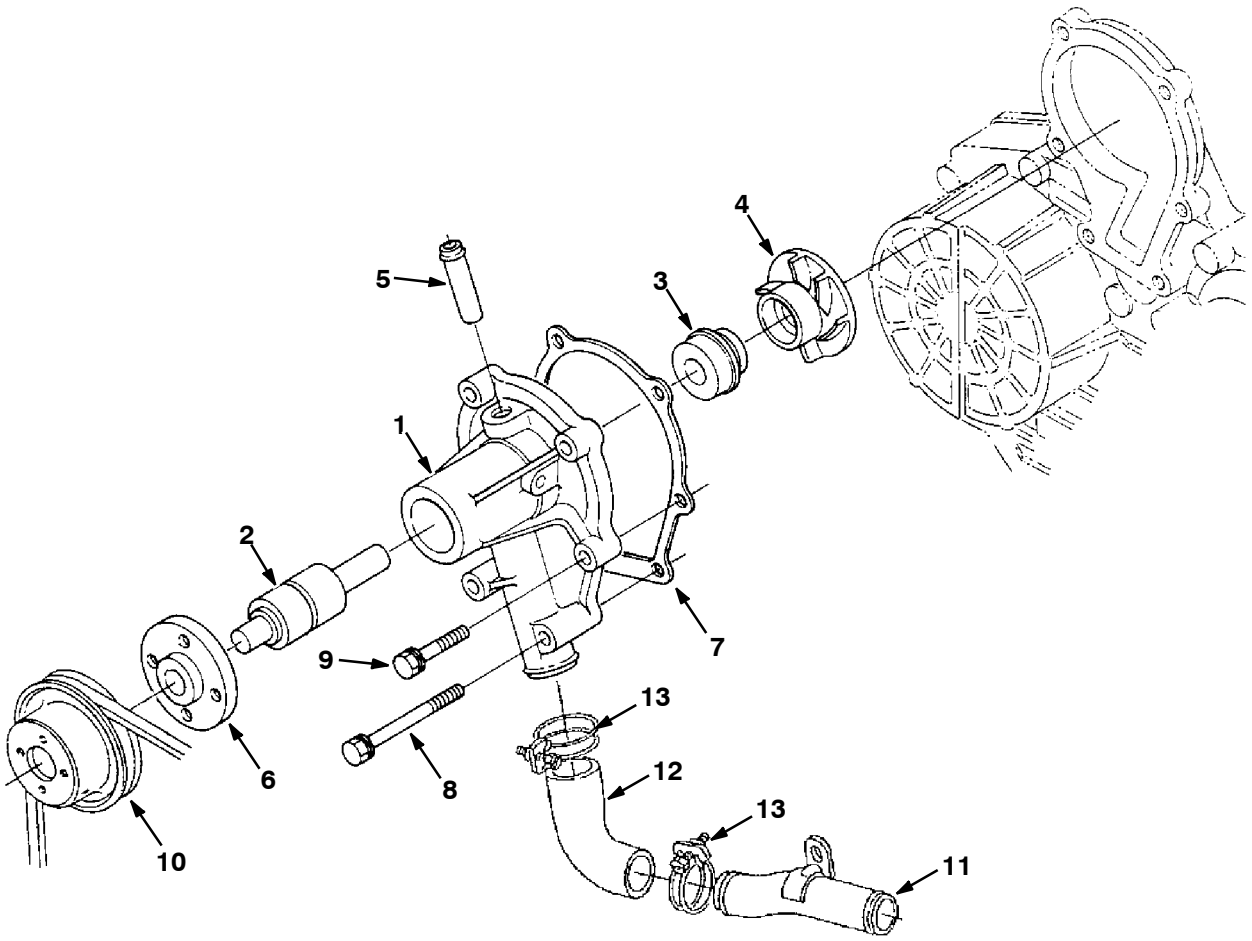

S30, D

	Ref.	Part No.	Description	Qty.
▽	1	66205	Assembly Pump, Water	1
▲	2	70915	Bearing, Ball	1
▲	3	70916	Assembly Seal, Mechanical	1
▲	4	70917	Impeller, Water Pump	1
▲	5	361440	Fitting, Pipe, Water [Ku]	1
▲	6	70919	Flange, Pump, Water [Ku]	1
▲	7	70920	Gasket, Water Pump	1
	8	72997	Bolt	2
	9	72996	Bolt	4
	10	55847	Pully, Fan	1
	11	9003868	Pipe, Water [Kubota]	1
	12	9003869	Pipe, Water [Kubota]	1
	13	9003870	Clamp [Kubota]	2

Fig. 6 - Main Bearing Case Group

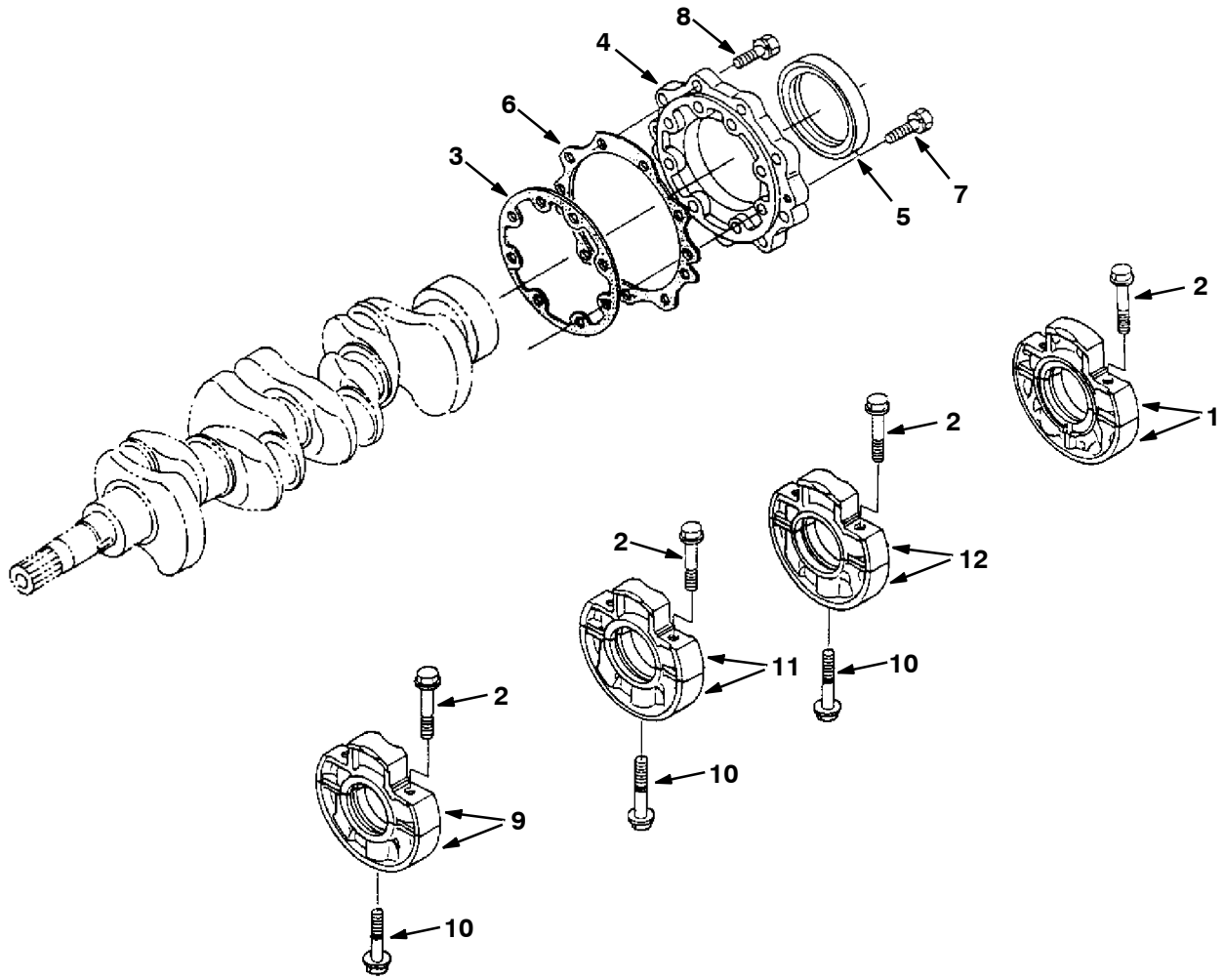

07417 - M20, D

Ref.	Part No.	Description	Qty.
1	70921	Assembly Case, Main Bearing	1
2	72998	Bolt, Bearing Case 1	8
3	70922	Gasket, Bearing Case	1
4	70923	Cover, Bearing Case	1
5	70924	Seal, Oil	1
6	70925	Gasket, Bearing Case Cover	1
7	72999	Bolt	8
8	39119	Bolt	9
9	70926	Assembly Case, Main Bearing 1	1
10	73479	Bolt. Bearing Case 2	3
11	70927	Assembly Case, Main Bearing 2	1
12	70928	Assembly Case, Main Bearing 3	1

Fig. 7 - Head Cover Group

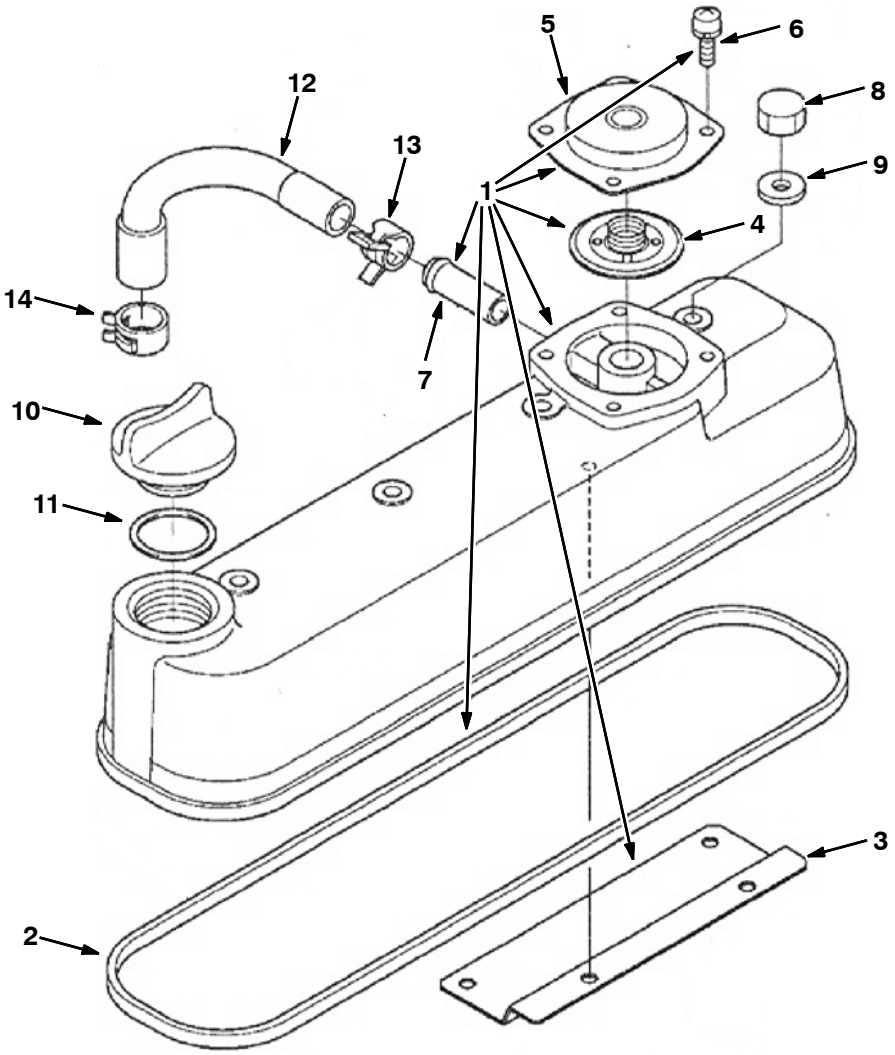

07419 - M20, D

	Ref.	Part No.	Description	Qty.
▽	1	372918	Cover Assy, Head, Cyl	1
▲	2	70929	Gasket, Head Cover	1
▲	3	372912	Shield, Breather	1
▲	4	372928	Valve, Breather, Complt	1
▲	5	372927	Cover, Breather	1
▲	6	372900	Screw, Pan	4
▲	7	30125	Pipe, Water	1
	8	73483	Nut, Cap	4
	9	73484	Gasket	4
	10	361374	Plug, Oil Filler	1
	11	70913	Seal, Org	1
	12	372913	Tube, Breather	1
	13	372901	Clamp, Hose	1
	14	372904	Clamp, Hose	1

Fig. 8 - Manifold Group

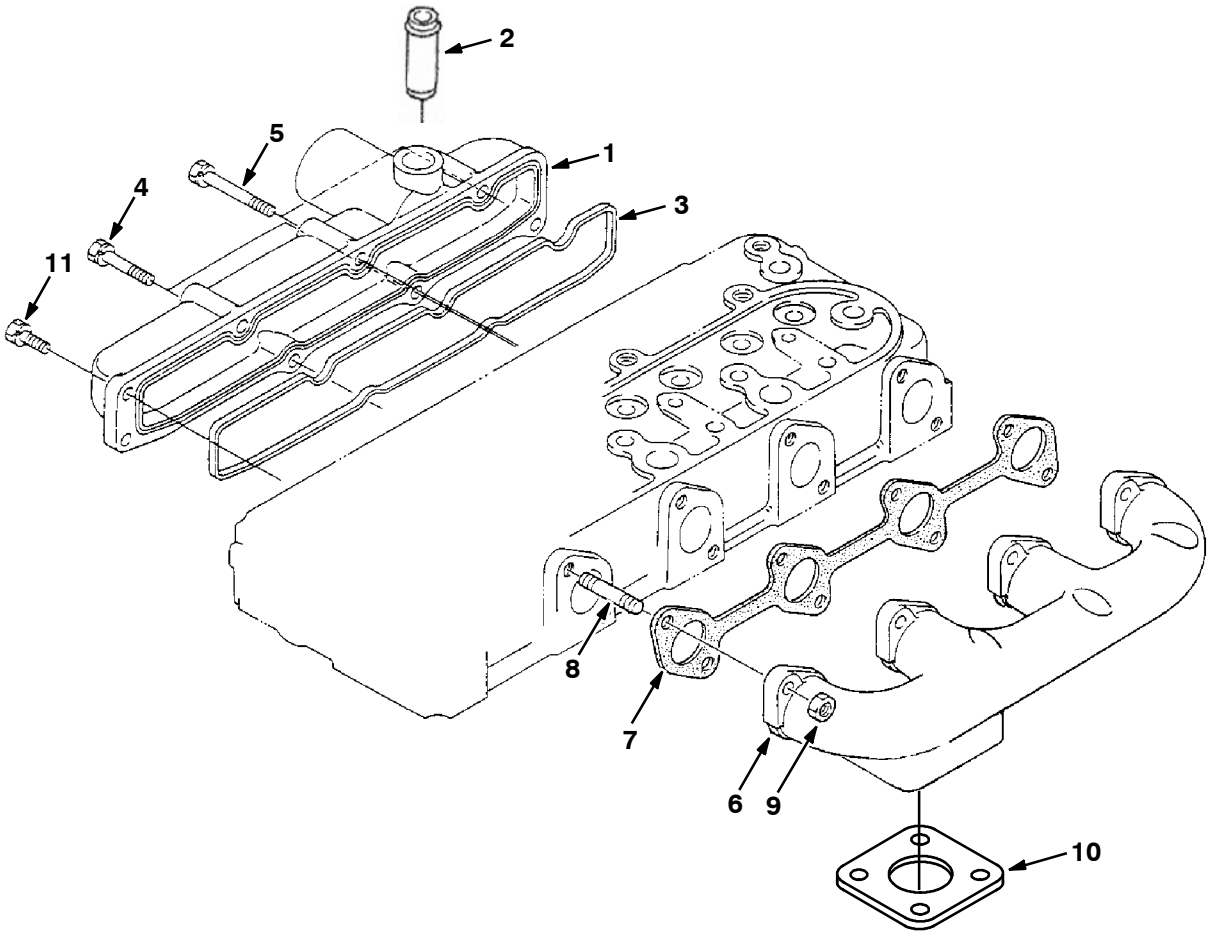

07421 - M20, D

	Ref.	Part No.	Description	Qty.
▽	1	372905	Manifold Assy, Inlet	1
▲	2	73481	Pipe, Breather [Ku]	1
▲	3	70934	Gasket, Manifold, Intake [Ku]	1
	4	72996	Bolt	2
	5	72994	Bolt	3
	6	73487	Manifold, Exhaust, Front, Down	1
	7	70935	Gasket, Ex-manifold	1
	8	73488	Stud	8
	9	361427	Nut	8
	10	51332	Gasket Ku	1
	11	40409	Bolt	3

Fig. 9 - Valve, Rocker Arm Group

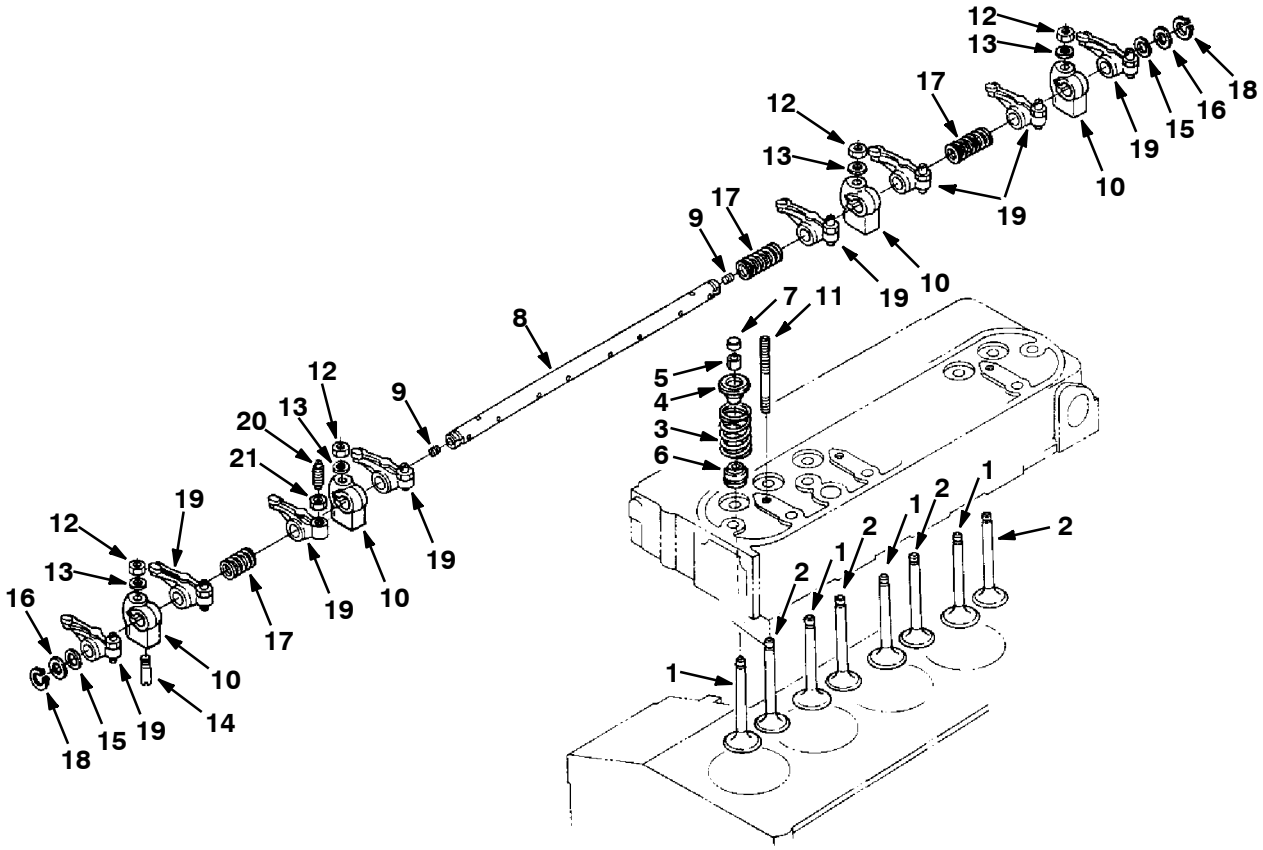

07423 - M20, D

	Ref.	Part No.	Description	Qty.
	1	70936	Valve, Inlet	4
	2	70937	Valve, Exhaust	4
	3	73491	Spring, Valve	8
	4	73492	Retainer, Valve Spring	8
	5	73493	Collet, Valve Spring	8
	6	73494	Seal, Valve Stem	8
	7	361392	Cap, Valve	8
▽	8	73495	Assembly Shaft, R-arm	1
▲	9	73496	Screw, Set	2
	10	73497	Bracket, Rocker Arm	4
	11	73498	Stud	4
	12	73499	Nut	4
	13	73500	Washer, Plain	4
	14	73501	Screw, Set	1
	15	73502	Washer 1	2
	16	73503	Washer 2	2
	17	73504	Spring, Rocker Arm	3
	18	73505	Cir-clip, External	2
▽	19	73506	Assembly Rocker Arm	8
▲	20	73507	Screw, Adjusting	8
▲	21	73508	Nut	8

Fig. 10 - Fuel Camshaft Group

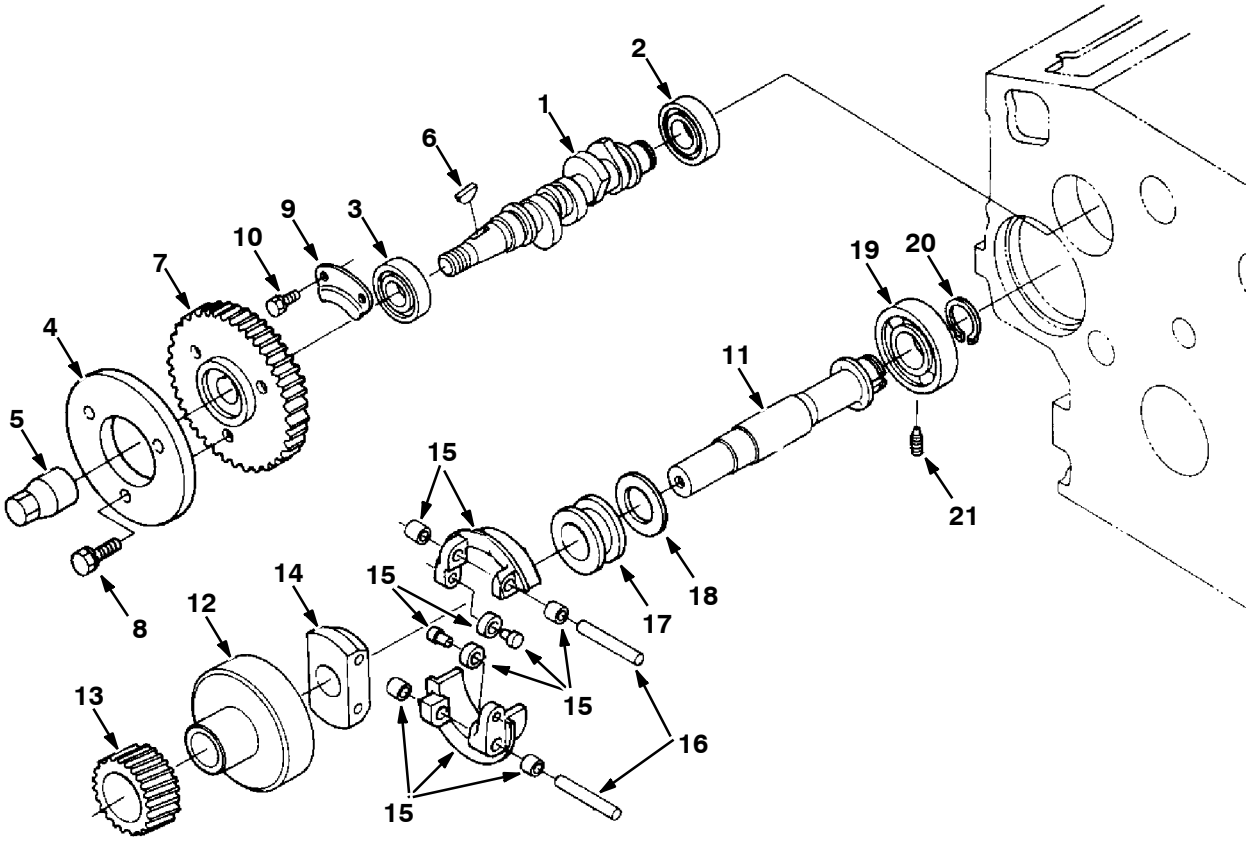

07441 - M20, D

	Ref.	Part No.	Description	Qty.
	1	84636	Camshaft, Fuel	1
	2	70975	Bearing, Ball	1
	3	70976	Bearing, Ball	1
	4	73592	Cam, Fuel	1
	5	73593	Nut, Cap	1
	6	73594	Key, Woodruff	1
	7	73595	Gear, Injection Pump	1
	8	40409	Bolt	3
	9	73596	Stopper	1
	10	71995	Bolt	2
▽	11	73597	Assembly Shaft, Governor	1
▲	12	73598	Holder, Governor Gear	1
▲	13	73599	Gear, Governor	1
▲	14	73600	Holder,	1
▲	15	73601	Comp. Weight, Governor	2
▲	16	73602	Shaft, Governor Weight	2
▲	17	70977	Sleeve, Governor	1
▲	18	70978	Washer, Thrust	1
	19	70979	Bearing, Ball	1
	20	73603	Cir-clip, Governor Shaft	1
	21	73604	Screw, Set	1

Fig. 11 - Camshaft Group

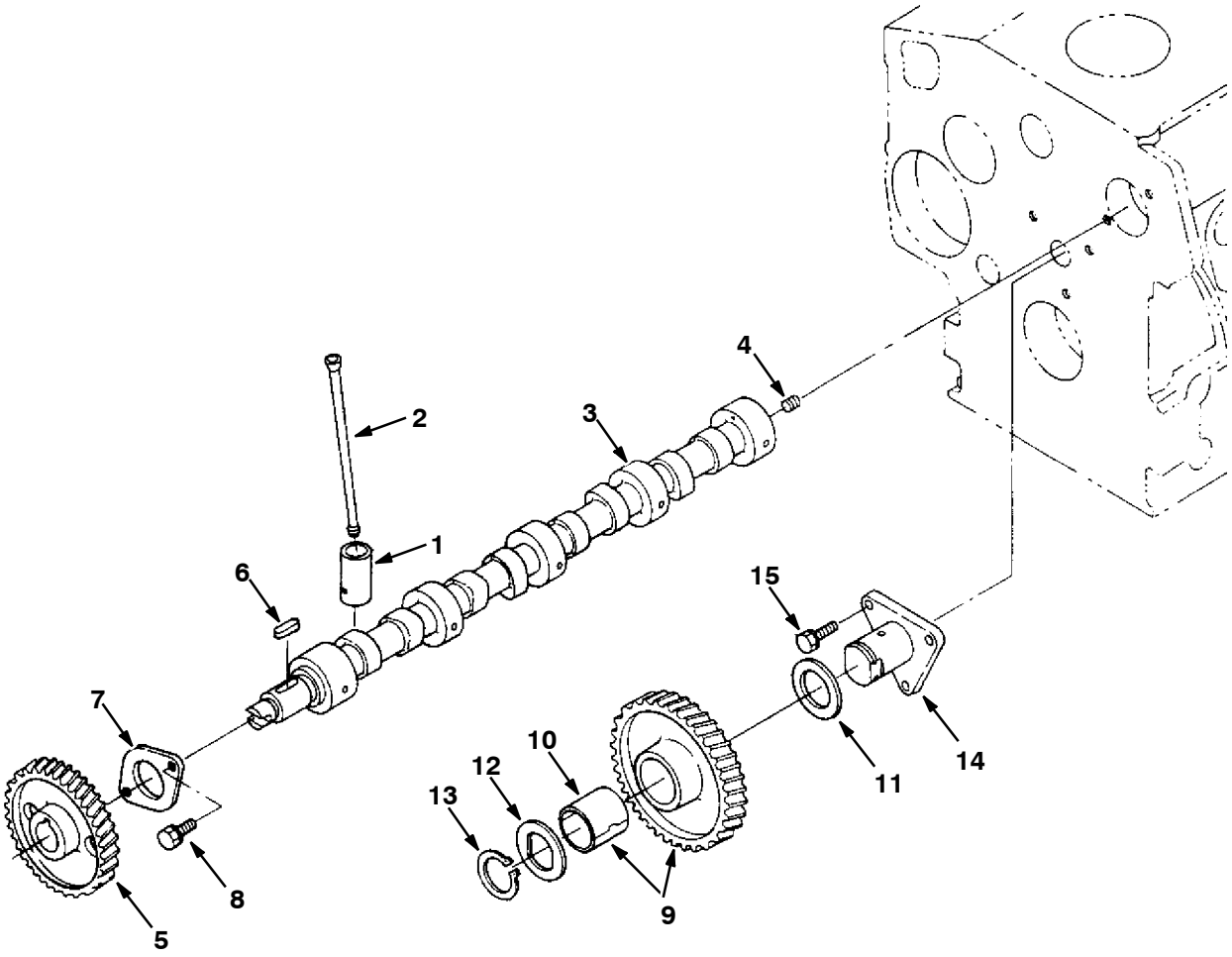

07425 - M20, D

Fig. 11 - Camshaft Group

	Ref.	Part No.	Description	Qty.
	1	12895	Tappet	8
	2	73509	Push Rod	8
▽	3	73510	Assembly Camshaft	1
▲	4	39197	Screw, Set	1
▲	5	73511	Gear, Camshaft	1
▲	6	73512	Key, Feather	1
▲	7	73513	Stopper, Camshaft	1
▲	8	39160	Bolt	2
▽	9	73514	Comp Idle Gear 1	1
▲	10	73515	Bush, Idle Gear	1
	11	73516	Collar, Idle Gear 1	1
	12	73517	Collar, Idle Gear 2	1
	13	73518	Cir-clip, Idle Gear	1
	14	73519	Shaft, Idle Gear 1	1
	15	41973	Bolt	3

Fig. 12 - Piston and Crankshaft Group

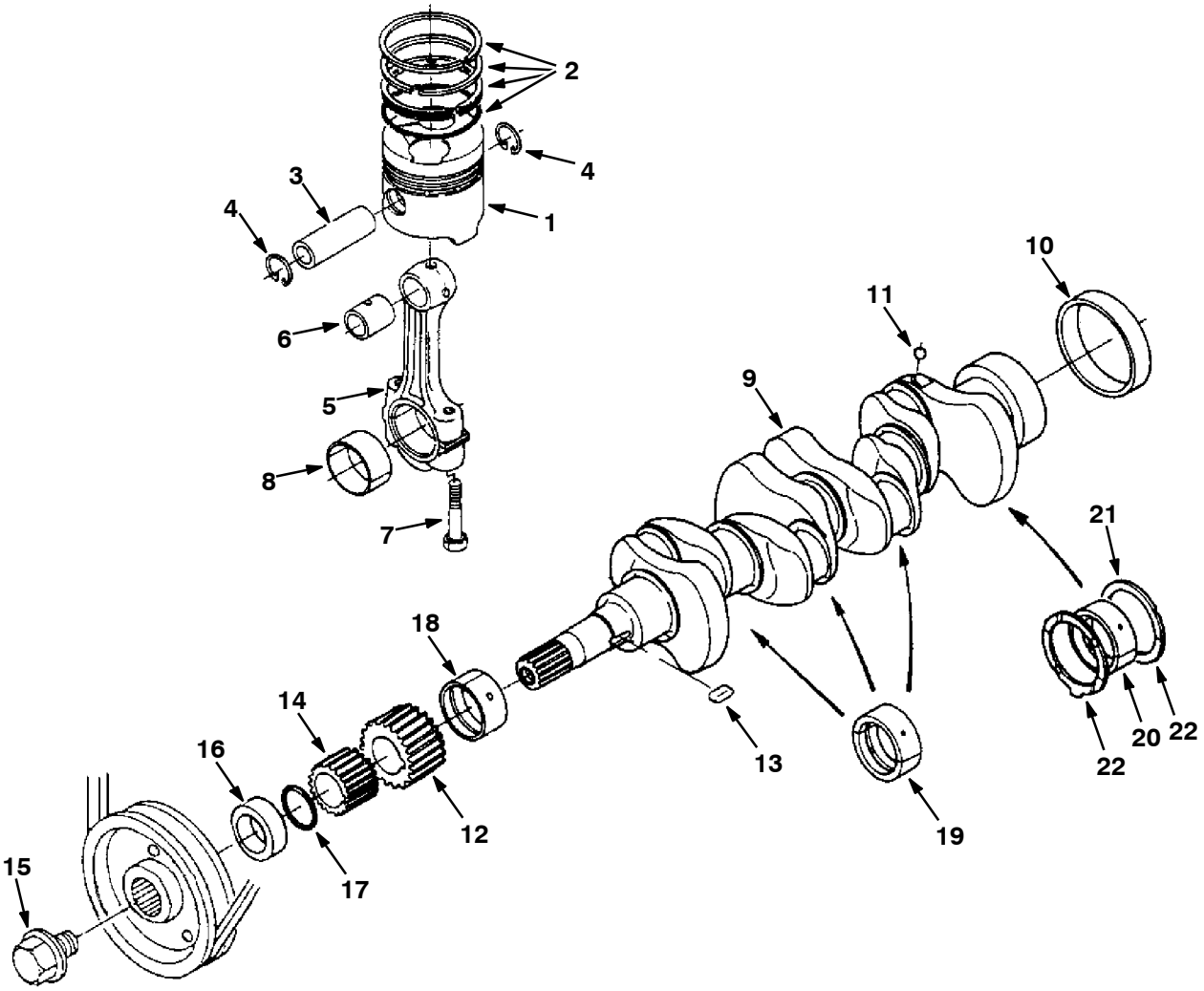

07427 - M20, D

Fig. 12 - Piston and Crankshaft Group

	Ref.	Part No.	Description	Qty.
	1	73520	Piston	4
	1	73521	Piston 05	4
	2	70938	Assembly Piston Ring	4
	2	70939	Assembly Piston Ring 05	4
	3	73522	Pin, Piston	4
	4	73523	Cir-clip, Piston Pin	8
▽	5	73524	Assembly Connecting Rod	4
▲	6	70940	Bush, Piston Pin	4
▲	7	73525	Bolt, Connecting Rod	8
▲	8	70941	Metal, Crankpin	4
▲	8	66204	Metal, Crankpin 02	4
▲	8	66207	Metal, Crankpin 04	4
▽	9	73526	Comp. Crankshaft	1
▲	10	70942	Sleeve, Crankshaft	1
▲	11	73527	Ball	4
▲	12	73528	Gear, Crankshaft	1
▲	13	73529	Key	1
▲	14	73530	Gear, Oil Pump Drive	1
	15	73532	Bolt	1
	16	70943	Collar, Crankshaft	1
	17	70944	O-Ring	1
	18	70945	Metal, Crankshaft 1	1
	18	70946	Metal, Crankshaft1 02	1
	18	70947	Metal, Crankshaft1 04	1
	19	70948	Metal, Crankshaft 2	3
	19	70949	Metal, Crankshaft2 02	3
	19	70950	Metal, Crankshaft2 04	3
	20	70951	Metal, Crankshaft 3	1
	20	70952	Metal, Crankshaft3 02	1
	20	70953	Metal, Crankshaft3 04	1
	21	10844	Metal, Side 1	2
	21	70954	Metal, Side 1 02	2
	21	70955	Metal, Side 1 04	2
	22	10845	Metal, Side 2	2
	22	30121	Metal, Side 2 02	2
	22	30122	Metal, Side 2 04	2

Fig. 13 - Flywheel Group

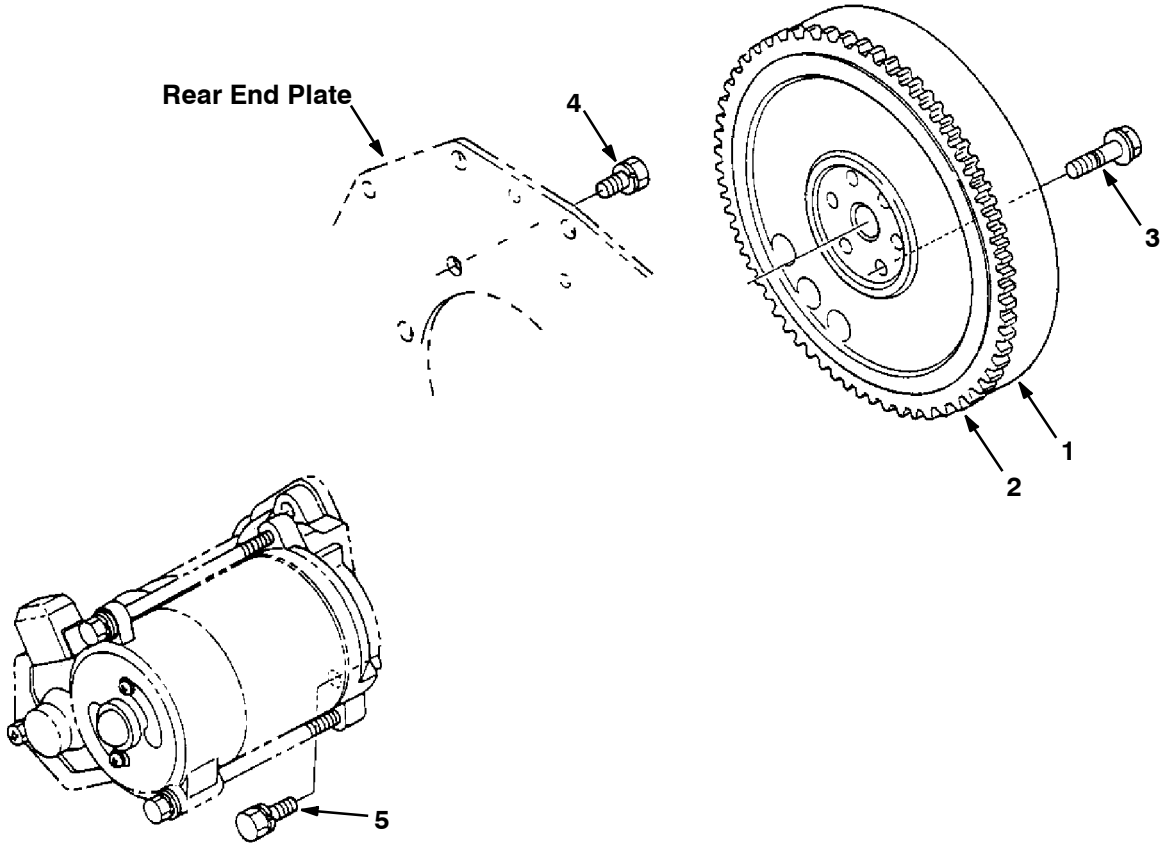

07429 - M20, D

Fig. 13 - Flywheel Group

	Ref.	Part No.	Description	Qty.
▽	1	70956	Comp. Flywheel	1
▲	2	70957	Gear, Ring	1
	3	73533	Bolt, Flywheel	6
	4	73534	Bolt	8
	5	73535	Bolt	2

Fig. 14 - Starter Breakdown, 74405

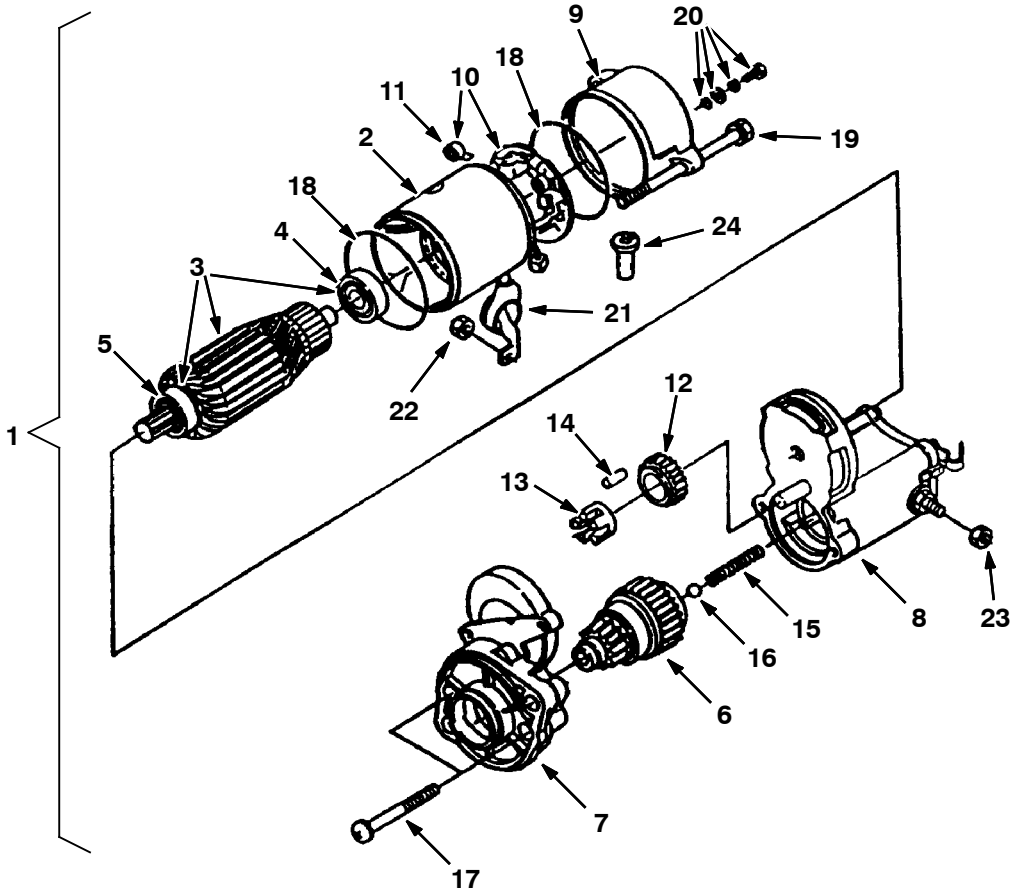

10182 - M20, D

Fig. 14 - Starter Breakdown, 74405

	Ref.	Part No.	Description	Qty.
▽	1	74405	Assy Starter	1
▲	2	70196	Assy Yoke	1
▲▽	3	70197	Assy Armature	1
▲▲	4	70198	Bearing	1
▲▲	5	70199	Bearing	1
▲	6	70200	Clutch, Over Running	1
▲	7	70201	Frame, Drive End	1
▲	8	70202	Assy Switch, Magneto	1
▲	9	70203	Frame, End	1
▲▽	10	70204	Assy Holder, Brush	1
▲▲	11	70205	Spring, Brush	4
▲	12	70206	Gear	1
▲	13	70207	Retainer	1
▲	14	73545	Roller	5
▲	15	70208	Spring	1
▲	16	73547	Ball	1
▲	17	70209	Bolt	2
▲	18	20433	O-Ring	2
▲	19	70210	Bolt	2
▲	20	20432	Assy Bolt	2
▲	21	70211	Cover	1
▲	22	73551	Nut, Hexagon	1
▲	23	70212	Nut, Hexagon	1
▲	24	70213	Pipe, Drain	1

Fig. 15 - Nozzle Holder and Glow Plug Group

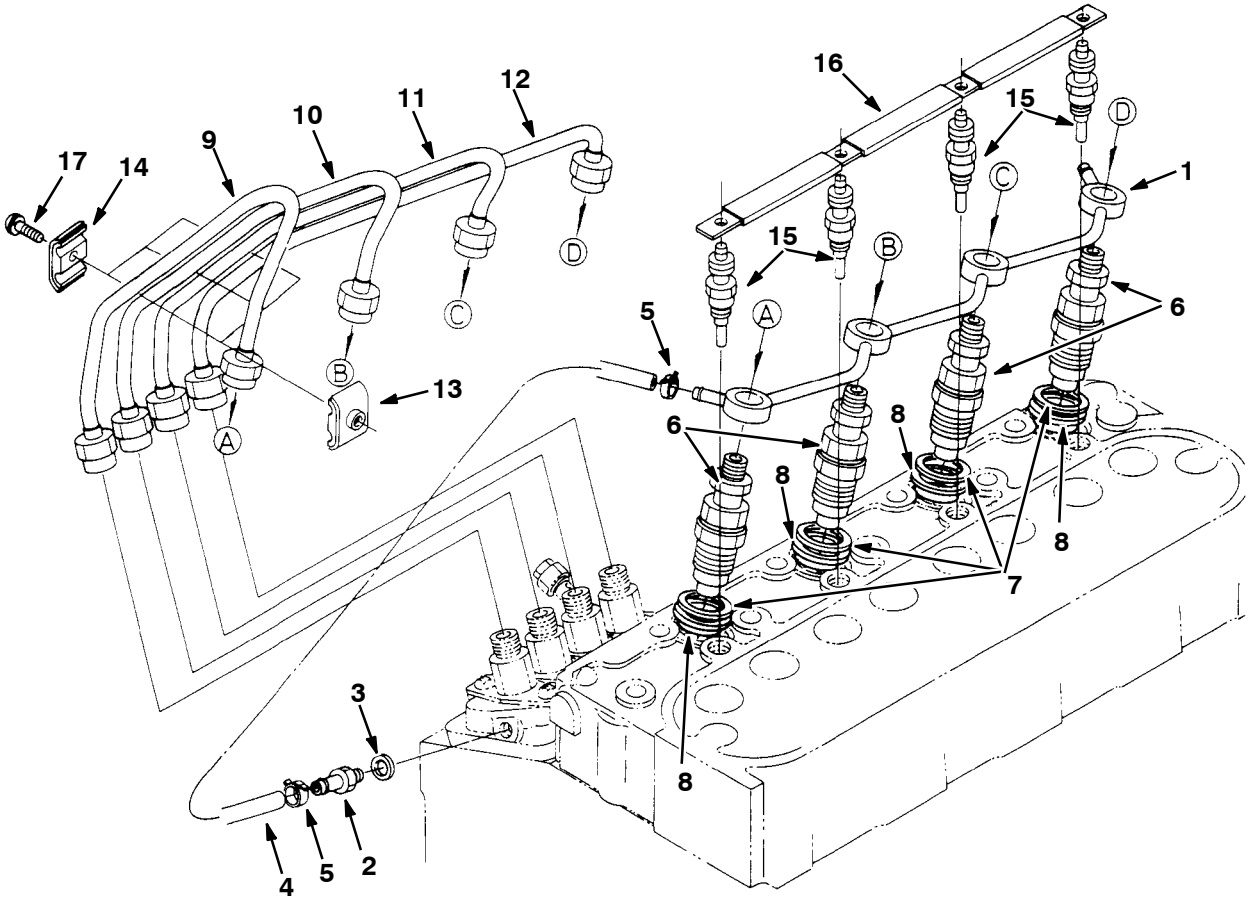

07433 - M20, D

Fig. 15 - Nozzle Holder and Glow Plug Group

	Ref.	Part No.	Description	Qty.
	1	73554	Pipe, Over Flow	1
	2	73555	Screw	1
	3	40166	Gasket	1
▽	4	361373	Assembly Pipe, Over Flow	1
▲	5	361368	Band, Pipe	2
▽	6	372917	Housing Assy, Nozzle	4
▲	7	70964	Gasket	1
▲	8	20719	Seal, Heat	1
	9	70965	Pipe, Injection 1	1
	10	70966	Pipe, Injection 2	1
	11	70967	Pipe, Injection 3	1
	12	70968	Pipe, Injection 4	1
	13	30131	Clamp, Pipe 1	3
	14	30132	Clamp, Pipe 2	3
	15	84638	Plug, Glow	4
	16	73560	Cord, Glow Plug	1
	17	39508	Screw, With Washer	3

Fig. 16 - Injection Pump Group

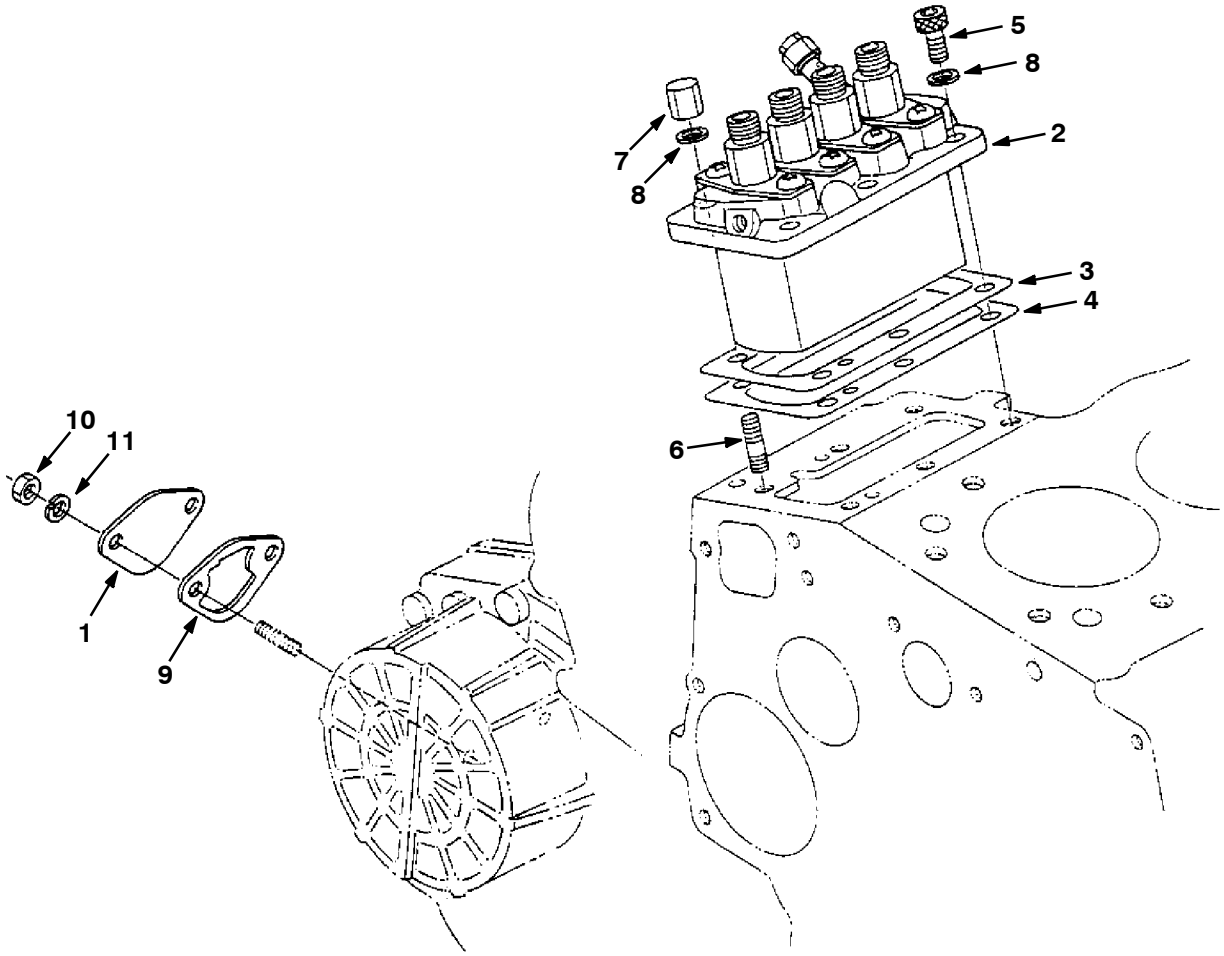

07437 - M20, D

Fig. 16 - Injection Pump Group

Ref.	Part No.	Description	Qty.
1	73565	Fuel Pump Cover Plate	1
2	84635	Assembly Pump, Injection (See Injection Pump Breakdown)	1
3	70972	Shim, Injection Pump 0.20 mm	1
4	70973	Shim, Injection Pump 0.25 mm	2
4	84644	Shim, Injection Pump 0.30 mm	1
5	73561	Bolt	3
6	73562	Stud	3
7	73563	Nut, Cap	3
8	39065	Washer, Spring	6
9	70974	Gasket, Fuel Pump	1
10	39121	Nut	2
11	39065	Washer, Spring	2

Fig. 17 - Injection Pump Breakdown

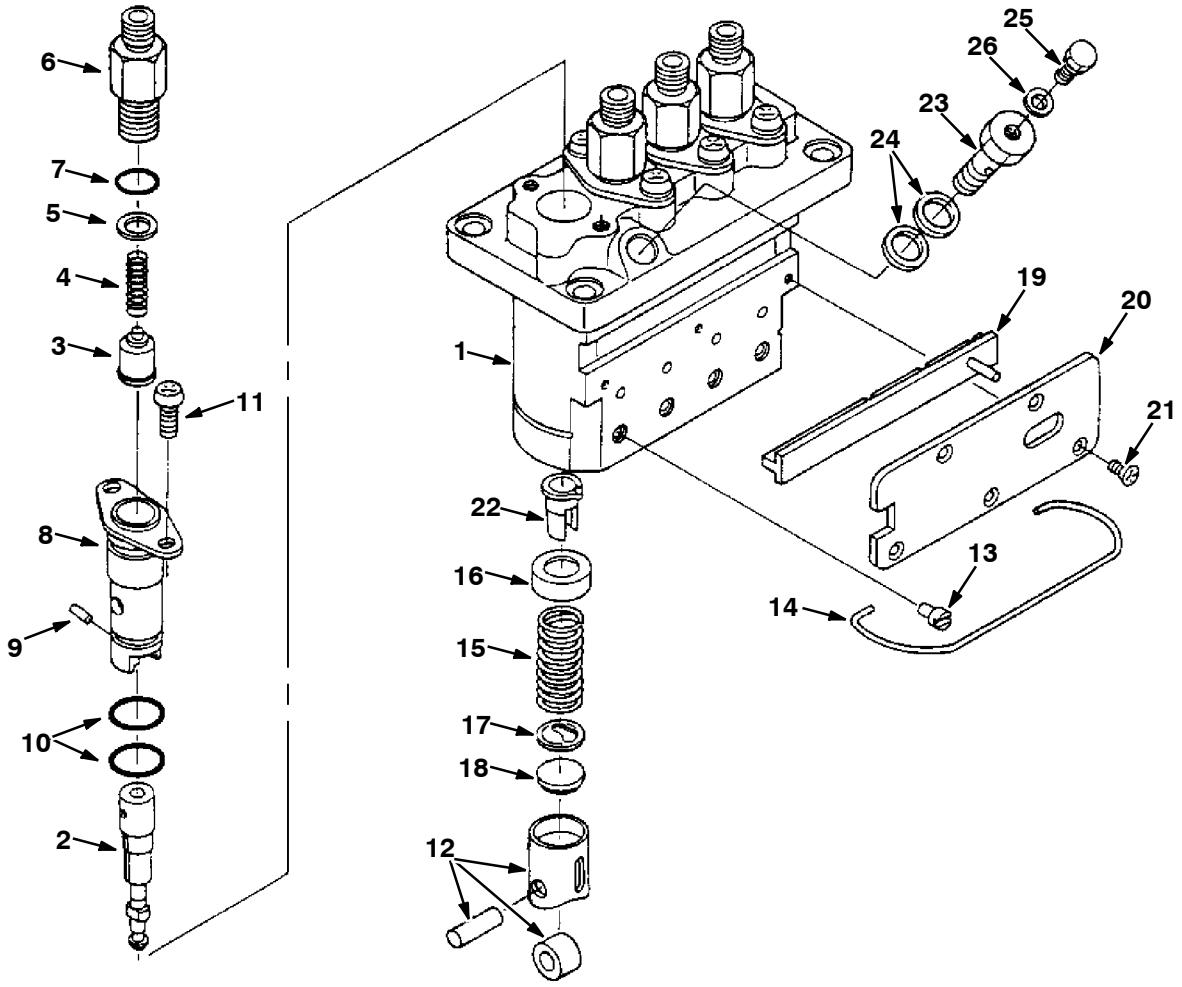

07439 - M20, D

Fig. 17 - Injection Pump Breakdown

	Ref.	Part No.	Description	Qty.
▽	1	84635	Assembly Pump, Injection	1
▲	2	84648	Plunger, Pump	4
▲	3	73567	Valve, Delivery	4
▲	4	73568	Spring, Delivery Valve	4
▲	5	73569	Gasket, Delivery Valve	4
▲	6	73570	Holder, Delivery Valve	4
▲	7	73571	O-Ring	4
▲	8	73572	Flange, Sleeve	4
▲	9	73573	Pin, Joint	4
▲	10	73574	O-Ring	8
▲	11	73575	Screw	8
▲	12	73576	Assembly Tappet	4
▲	13	73577	Pin, Tappet Guide	4
▲	14	73578	Pin, Clamp	1
▲	15	73579	Spring, Plunger	4
▲	16	73580	Seat, Spring Upper	4
▲	17	73581	Seat, Spring Lower	4
▲	18	73582	Shim	1
▲	19	84649	Rack, Control	1
▲	20	84650	Plate	1
▲	21	73585	Screw	5
▲	22	73586	Sleeve, Control	4
▲	23	84651	Screw, Follow	1
▲	24	73588	Gasket	2
▲	25	73589	Screw	1
▲	26	73590	Gasket	1

Fig. 18 - Idling Group

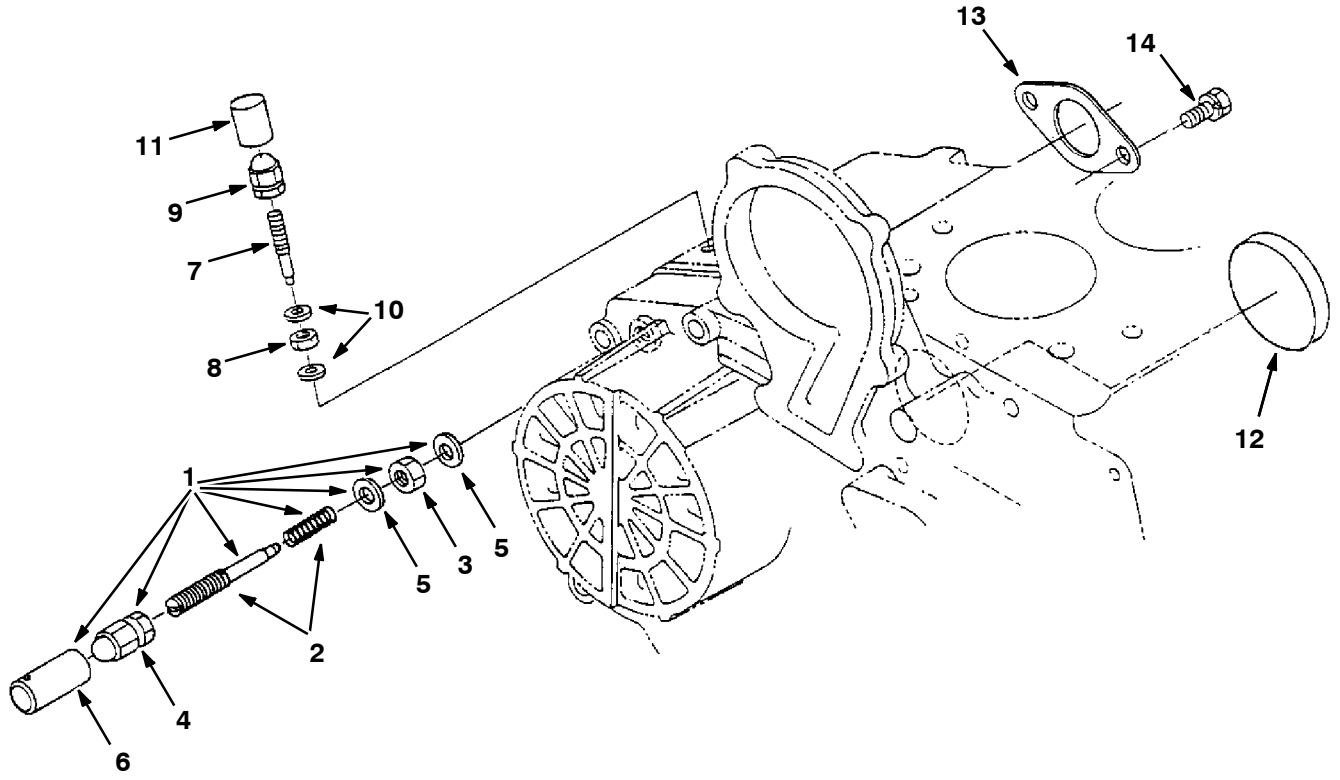

07443 - M20, D

	Ref.	Part No.	Description	Qty.
▽	1	70980	Assembly Apparatus, Idle	1
▲	2	73605	Assembly Bolt, Adjusting	1
▲	3	73606	Nut	1
▲	4	73607	Nut, Cap	1
▲	5	40166	Gasket	2
▲	6	30136	Cap	1
	7	73610	Bolt, Adjusting	1
	8	73606	Nut	1
	9	73607	Nut, Cap	1
	10	40166	Gasket	2
	11	30136	Cap	1
	12	70188	Cover	1
	13	70165	Gasket, Thrtl Blk	1
	14	39160	Bolt	2

Fig. 19 - Speed Control Plate Group

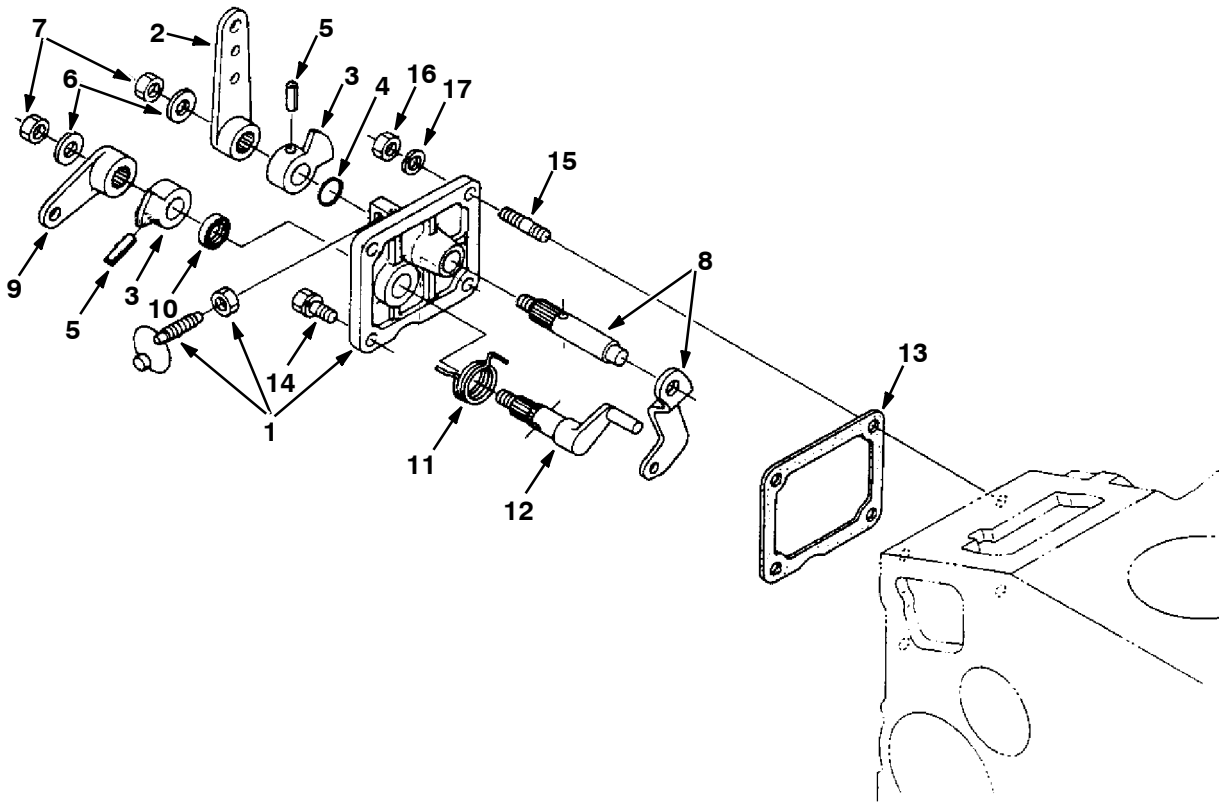

07445 - M20, D

	Ref.	Part No.	Description	Qty.
▽	1	70982	Assembly Plate, Control	1
▲	2	73618	Lever, Speed Control	1
▲	3	73619	Lever, Speed Control	2
▲	4	73620	O-Ring	1
▲	5	40407	Pin, Spring	2
▲	6	73621	Washer, Plain	2
▲	7	73622	Nut	2
▲	8	73623	Comp. Lever, Governor	1
▲	9	73624	Lever, Engine Stop	1
▲	10	70983	Seal, Oil	1
▲	11	73625	Spring, Return	1
▲	12	73626	Shaft, Stop Lever	1
	13	70984	Gasket	1
	14	41973	Bolt	2
	15	72018	Stud	2
	16	39121	Nut	2
	17	39065	Washer, Spring	2

Fig. 20 - Governor Group

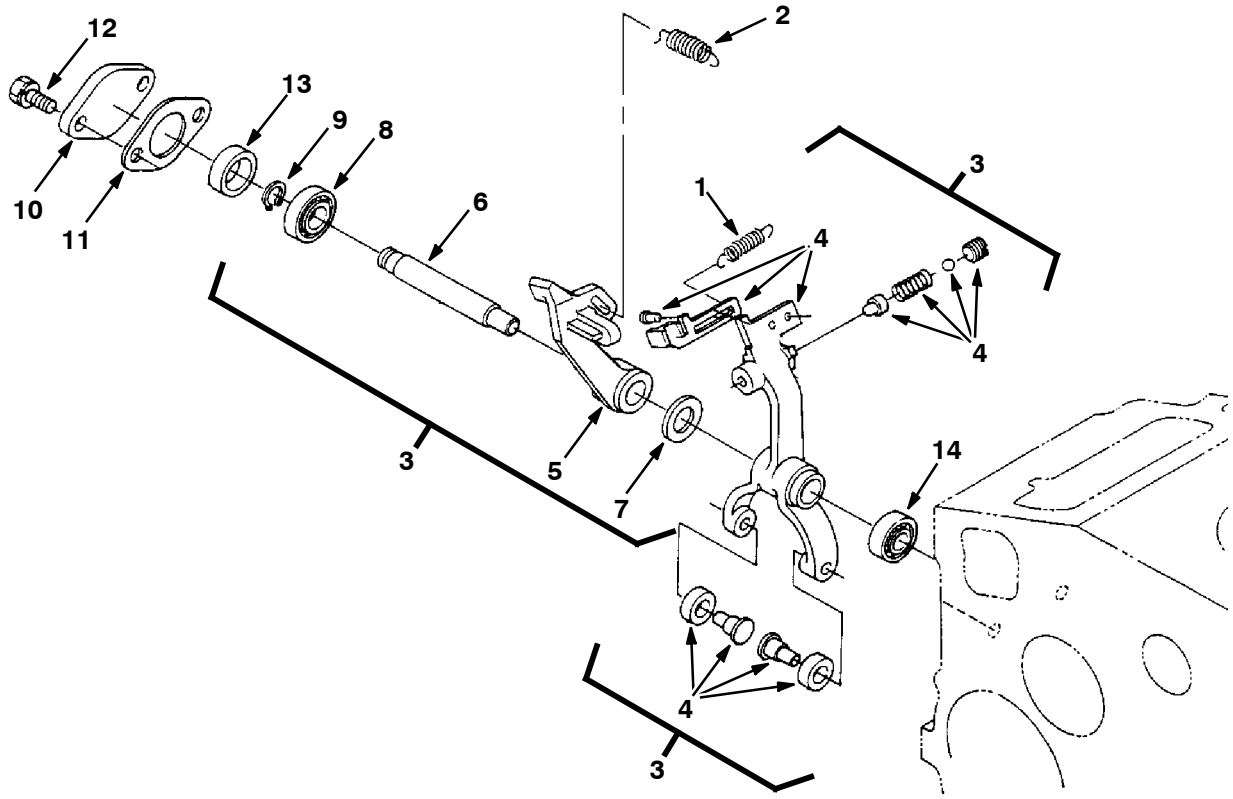

07447 - M20, D

	Ref.	Part No.	Description	Qty.
	1	70985	Spring, Start	1
	2	70986	Spring, Governor	1
▽	3	73627	Assembly Lever, Fork	1
▲	4	70987	Comp. Lever, Fork 1	1
▲	5	73628	Lever, Fork 2	1
▲	6	73629	Shaft, Fork Lever	1
▲	7	70988	Washer, Plain	1
▲	8	70989	Bearing, Ball	1
▲	9	73630	Cir-clip, External	1
	10	73631	Cover, Fork Lever Shaft	1
	11	361430	Gasket	1
	12	39160	Bolt	2
	13	70991	Collar 1	1
	14	70992	Bearing, Ball	1

Fig. 21 - Water Flange Group

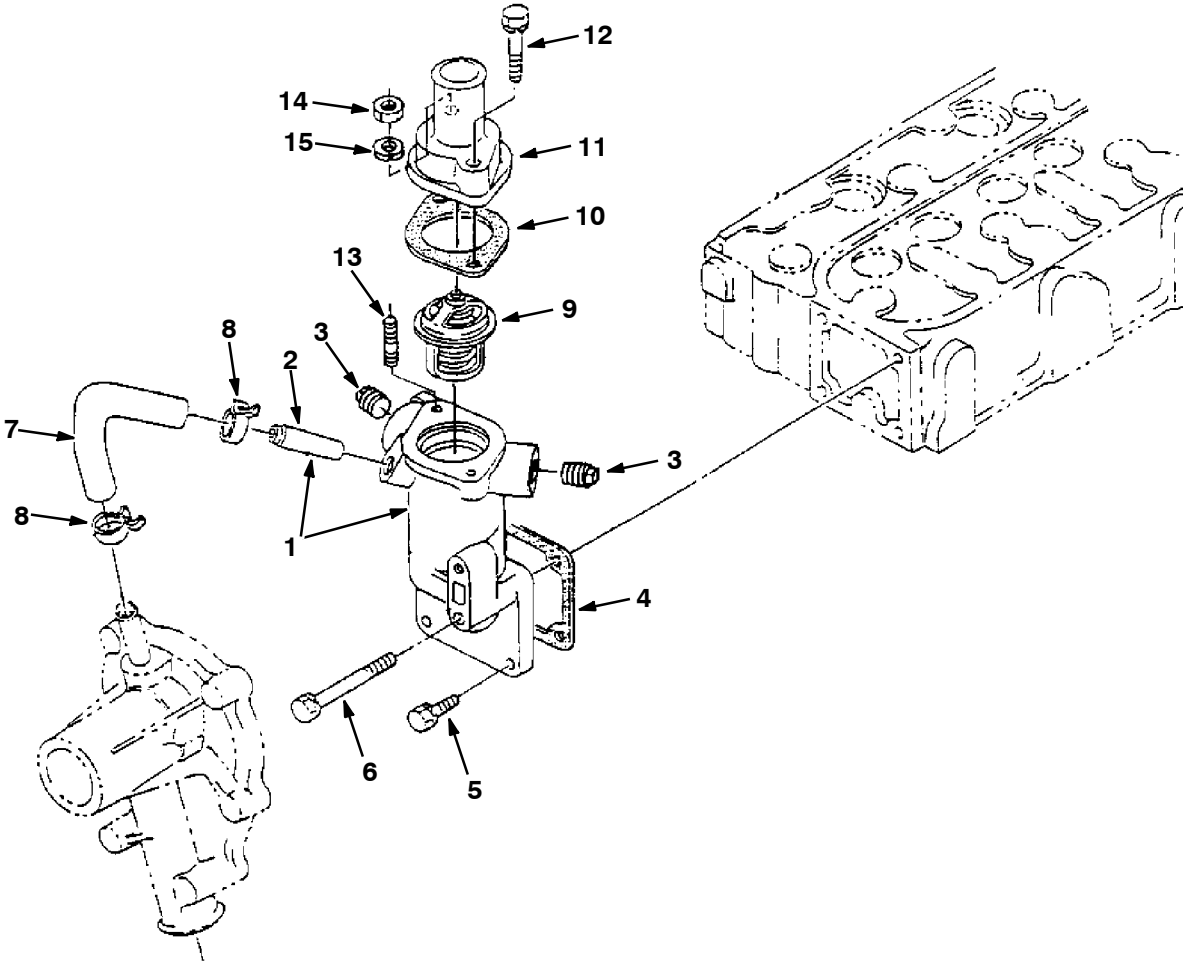

07451 - M20, D

	Ref.	Part No.	Description	Qty.
▽	1	368090	Flange, Water [Ku]	1
▲	2	361440	Pipe, Water Return 1	1
	3	73632	Plug	2
	4	70994	Gasket, Water Flange	1
	5	41973	Bolt	3
	6	72995	Bolt	1
	7	73633	Pipe, Water Return 2	1
	8	73634	Band, Pipe	2
	9	10852	Thermostat, 180deg, 1.7d	1
	10	10851	Gasket, Thermostat	1
	11	368091	Housing, Thermostat [Ku]	1
	12	72996	Bolt	1
	13	73636	Stud	1
	14	39121	Nut	1
	15	39065	Washer, Spring	2

SECTION 6

Contents **Page**

Fig. 1 – Crankcase Group 6–2
Fig. 2 – Oil Pan Group 6–4
Fig. 3 – Cylinder Head Group 6–5
Fig. 4 – Gear Case Group 6–6
Fig. 5 – Water Pump Group 6–8
Fig. 6 – Main Bearing Case Group 6–9
Fig. 7 – Head Cover Group 6–10
Fig. 8 – Manifold Group 6–11
Fig. 9 – Valve, Rocker Arm Group 6–12
Fig. 10 – Fuel Camshaft Group 6–13
Fig. 11 – Camshaft Group 6–14
Fig. 12 – Piston and Crankshaft Group 6–16
Fig. 13 – Flywheel Group 6–18
Fig. 14 – Starter Breakdown, 74405 6–19
Fig. 15 – Nozzle Holder and Glow Plug Group . 6–20
Fig. 16 – Nozzle Holder Breakdown 6–21
Fig. 17 – Injection Pump Group 6–22
Fig. 18 – Injection Pump Breakdown 6–24
Fig. 19 – Idling Group 6–26
Fig. 20 – Speed Control Plate Group 6–27
Fig. 21 – Governor Group 6–28
Fig. 22 – Water Flange Group 6–29

Fig. 1 - Crankcase Group

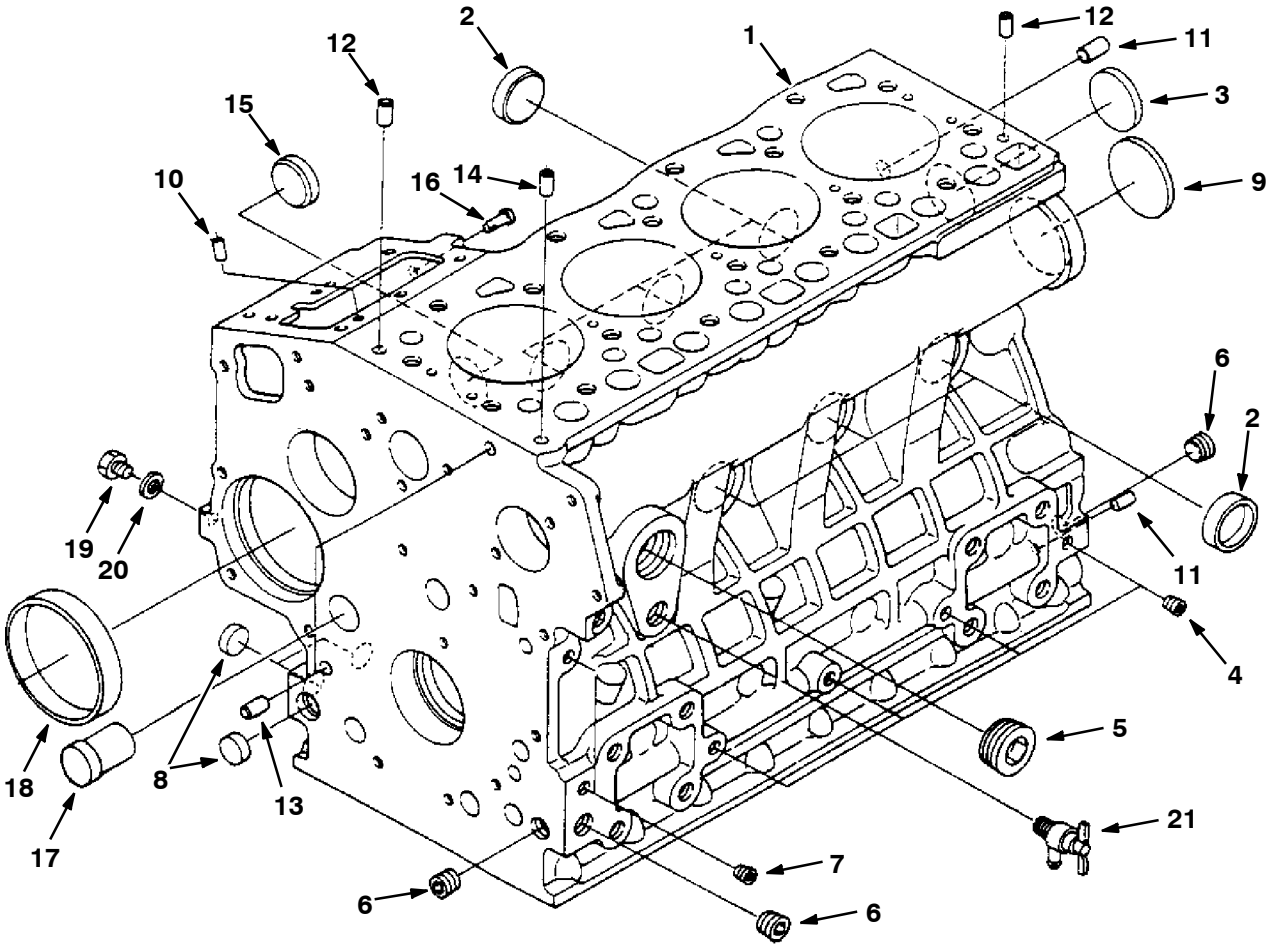

Fig. 1 - Crankcase Group

	Ref.	Part No.	Description	Qty.
▽	1	9004335	Crankcase, Complt [Ku]	1
▲	2	70998	Plug, Cup, Sealing [Ku]	6
▲	3	39087	Plug, Cup, Sealing [Ku]	1
▲	4	39088	Fitting, Pipe, Plug [Ku]	4
▲	5	70999	Plug, Eng [Ku]	1
▲	6	71985	Fitting, Pipe, Plug [Ku]	3
▲	7	39051	Fitting, Pipe, Plug [Ku]	2
▲	8	361436	Plug, Cup, Sealing [Ku]	3
▲	9	71986	Plug, Cup, Sealing [Ku]	1
▲	10	71987	Pin, Dowel [Ku]	2
▲	11	71988	Pin, Dowel [Ku]	2
▲	12	9004431	Pin, Straight [Ku]	2
▲	13	71990	Pin, Eng [Ku]	2
▲	14	71991	Tube, Pin [Ku]	1
▲	15	71992	Plug, Cup, Sealing [Ku]	1
▲	16	9004337	Pin, Start, Spring	1
▲	17	71993	Plug, Eng [Ku]	1
▲	18	70887	Bushing, Gear, Gov [Ku]	1
▲	19	39062	Fitting, Plug [Ku]	1
▲	20	393570	Gasket	1
	21	70888	Fitting, Draincock [Ku]	1

Fig. 2 - Oil Pan Group

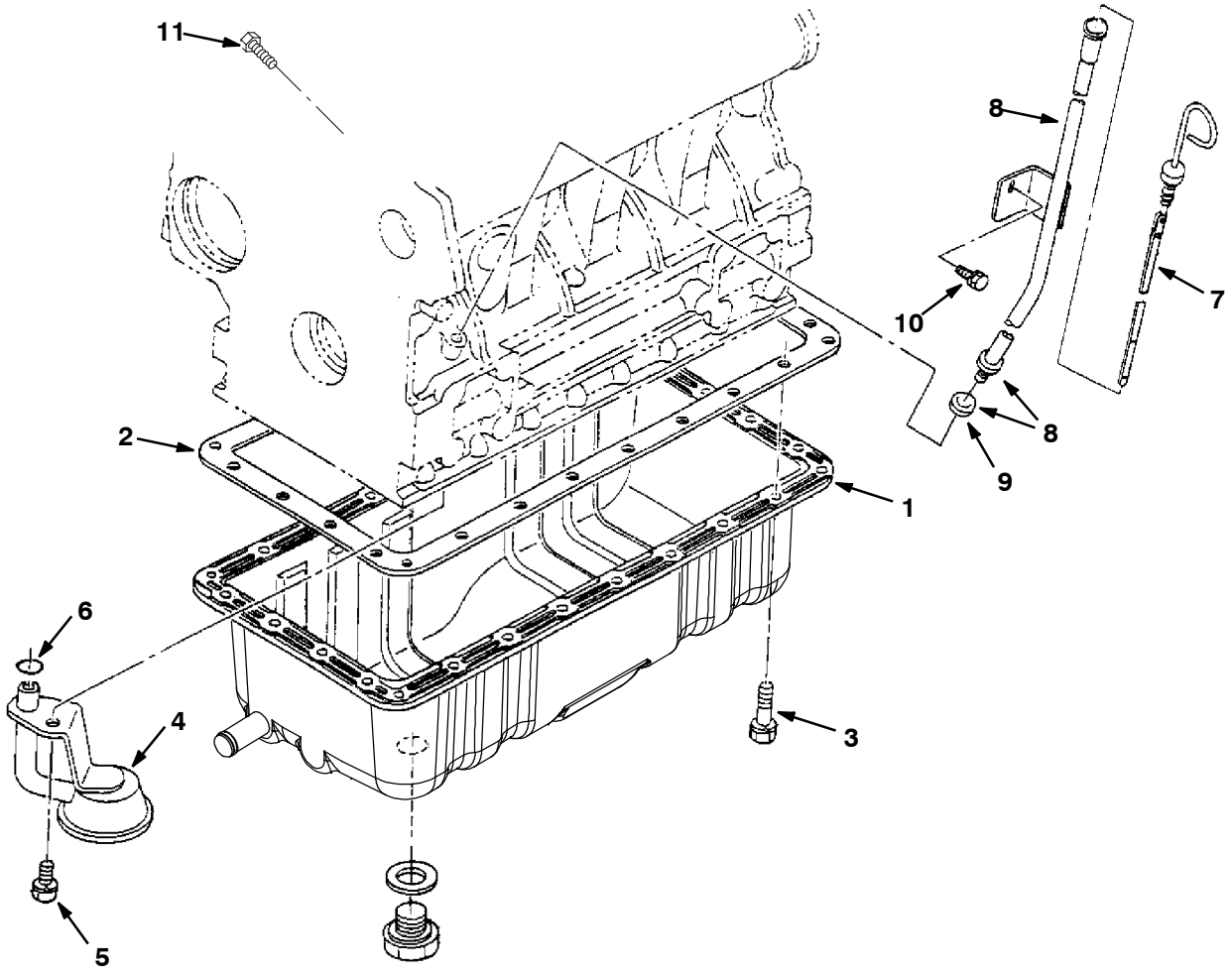

	Ref.	Part No.	Description	Qty.
	1	1023144	Pan, Oil, Dsl	1
	2	70889	Gasket, Pan, Oil	1
	3	9004338	Bolt [Ku]	26
	4	9003888	Filter, Oil [Ku]	1
	5	39094	Screw, Hex [Ku]	1
	6	9004339	O-Ring [Ku]	1
	7	9004435	Gauge, Oil [Ku]	1
▽	8	361428	Dipstick, Oil [Ku]	1
▲	9	361366	Seal, Org [Ku]	1
	10	39073	Screw, Hex [Ku]	1
		66187	Gasket Set	1
	11	9004348	Plug, Gauge, Oil [Ku]	1

Fig. 3 - Cylinder Head Group

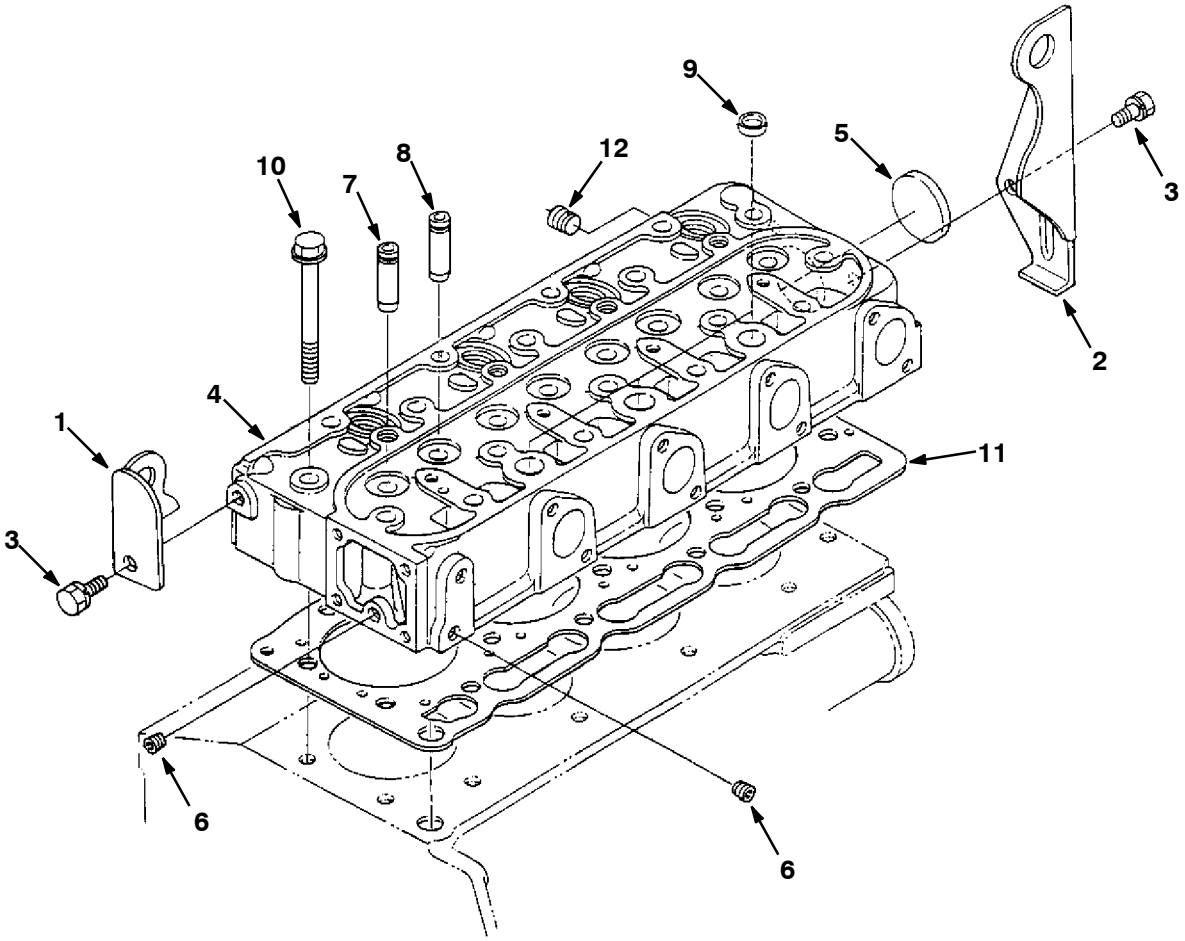

	Ref.	Part No.	Description	Qty.
	1	71996	Ear, Lifting, Eng [Ku]	1
	2	71997	Ear, Lifting, Eng [Ku]	1
	3	39073	Screw, Hex [Ku]	2
▽	4	9004340	Head, Cylinder [Ku]	1
▲	5	393504	Cap, Sealing	1
▲	6	39088	Fitting, Pipe, Plug [Ku]	2
▲	7	372906	Guide, Valve, Inlet	4
▲	8	372907	Guide, Valve, Exhaust	4
▲	9	361372	Plug, Cup, Sealing [Ku]	3
	10	70897	Screw, Hex, Head, Cyl [Ku]	18
	11	9004341	Gasket, Head, Cyl [Ku]	1
		66194	Gasket Set, Upper	1
	12	72010	Fitting, Pipe, Plug [Ku]	1

Fig. 4 - Gear Case Group

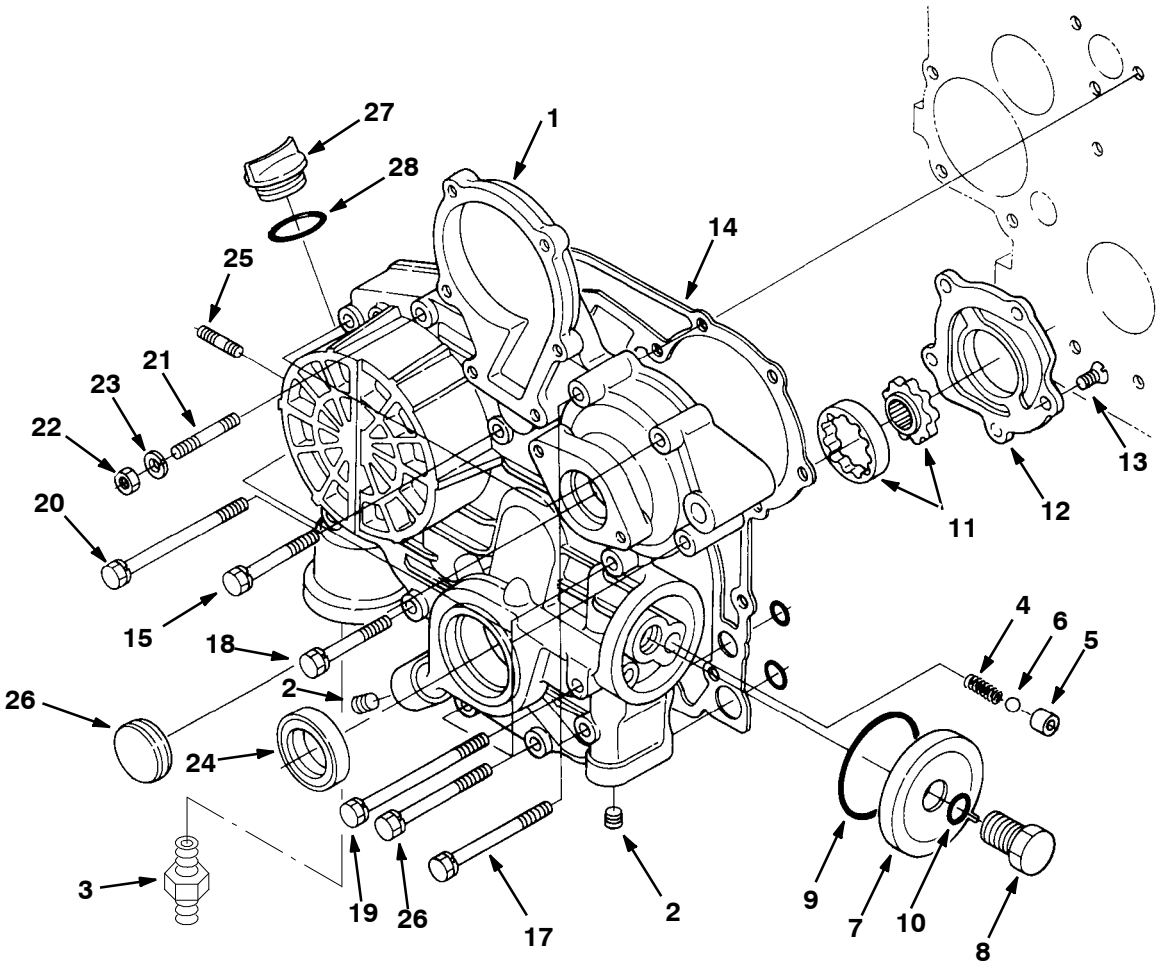

Fig. 4 - Gear Case Group

	Ref.	Part No.	Description	Qty.
▽	1	9004432	Crankcase, Comp [Ku]	1
▲	2	361401	Fitting, Pipe, Plug [Ku]	5
▲	3	12916	Fitting, Fltr, Oil [Ku]	1
▲	4	70900	Spring, Cmpr, Relief [Ku]	1
▲	5	70901	Tube, Seat, Valve, Oil [Ku]	1
▲	6	70902	Ball, Relief, Oil [Ku]	1
▲	7	70905	Cover	1
▲	8	70906	Bolt	1
▲	9	70907	Seal, Org [Ku]	1
▲	10	70911	Seal, Org	1
▲	11	70903	Pump, Oil, Eng [Ku]	1
▲	12	70904	Cover, Pump, Oil	1
	13	72013	Screw, Flt [Ku]	5
	14	70912	Gasket, Case, Gear [Ku]	1
	15	72993	Screw, Hex [Ku]	3
	16	384872	Bolt	4
	17	72994	Screw, Hex [Ku]	2
	18	72014	Screw, Hex [Ku]	1
	19	72015	Screw, Hex [Ku]	2
	20	72016	Bolt	1
	21	9004346	Stud [Ku]	1
	22	39121	Nut, Hex [Ku]	1
	23	39065	Washer, Lock, Split [Ku]	1
	24	361389	Seal, Oil, Front [Ku]	1
	25	9004347	Stud [Ku]	2
	26	72019	Cover	1
	27	361374	Cap, Filler, Oil [Ku]	1
	28	70913	Seal, Org	1

Fig. 5 - Water Pump Group

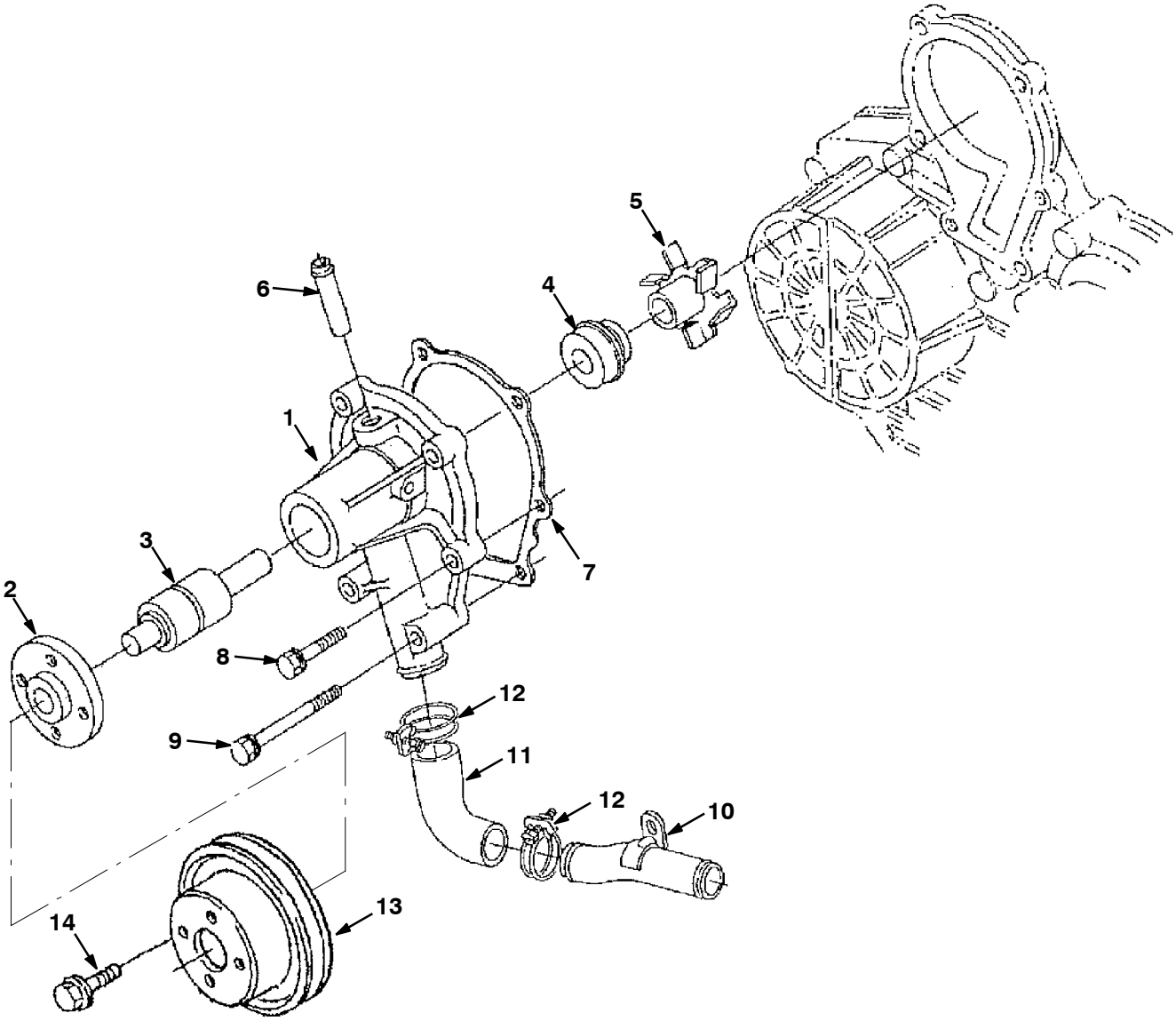

	Ref.	Part No.	Description	Qty.
▽	1	9004402	Pump, Water Assy [Ku]	1
▲	2	70919	Flange, Pump, Water [Ku]	1
▲	3	9004403	Bearing [Ku]	1
▲	4	9004404	Seal, Mechanical Assy [Ku]	1
▲	5	9004405	Impeller, Pump, Water [Ku]	1
▲	6	361440	Fitting, Pipe, Water [Ku]	1
▲	7	70920	Gasket, Pump, Water [Ku]	1
	8	9004406	Bolt [Ku]	4
	9	9004407	Bolt [Ku]	2
	10	9003868	Pipe, Water [Kubota]	1
	11	9003869	Pipe, Water [Kubota]	1
	12	9003870	Clamp [Kubota]	2
	13	55847	Sheave, Fan [Ku]	1
	14	393588	Bolt, Flng	4

Fig. 6 - Main Bearing Case Group

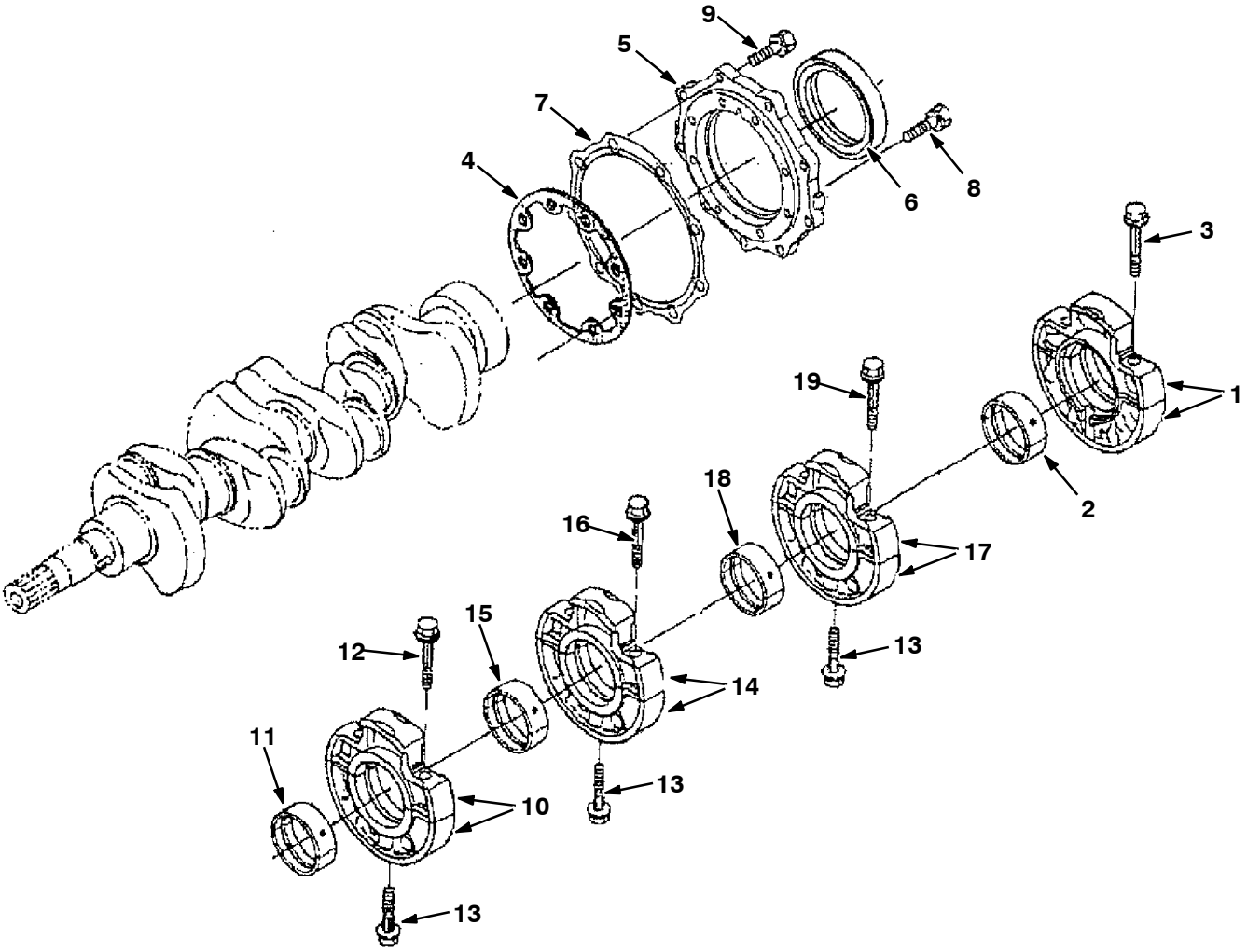

	Ref.	Part No.	Description	Qty.
▽	1	9004349	Bearing, Case [Ku]	1
▲	2	9004436	Crankshaft, Metal [Ku]	1
▲	3	72998	Screw, Hex, Case, Brg, Main [Ku]	2
	4	9004350	Gasket, Bearing, Case [Ku]	1
	5	70923	Cover, Brg Case, Eng [Ku]	1
	6	70924	Seal, Oil, Rear [Ku]	1
	7	70925	Gasket, Case, Gear [Ku]	1
	8	384871	Bolt	8
	9	371017	Bolt	9
▽	10	9004437	Case, Main, Brg Assy	1
▲	11	70948	Bearing, Cshft, Std [Ku]	1
▲	12	72998	Screw, Hex, Case, Brg, Main [Ku]	2
	13	73479	Screw, Hex, Case, Brg, Main [Ku]	3
▽	14	9004438	Case, Main, Brg Assy	1
▲	15	70948	Bearing, Cshft, Std [Ku]	1
▲	16	72998	Screw, Hex, Case, Brg, Main [Ku]	2
▽	17	9004439	Case, Main, Brg Assy	1
▲	18	70948	Bearing, Cshft, Std [Ku]	1
▲	19	72998	Screw, Hex, Case, Brg, Main [Ku]	2

Fig. 7 - Head Cover Group

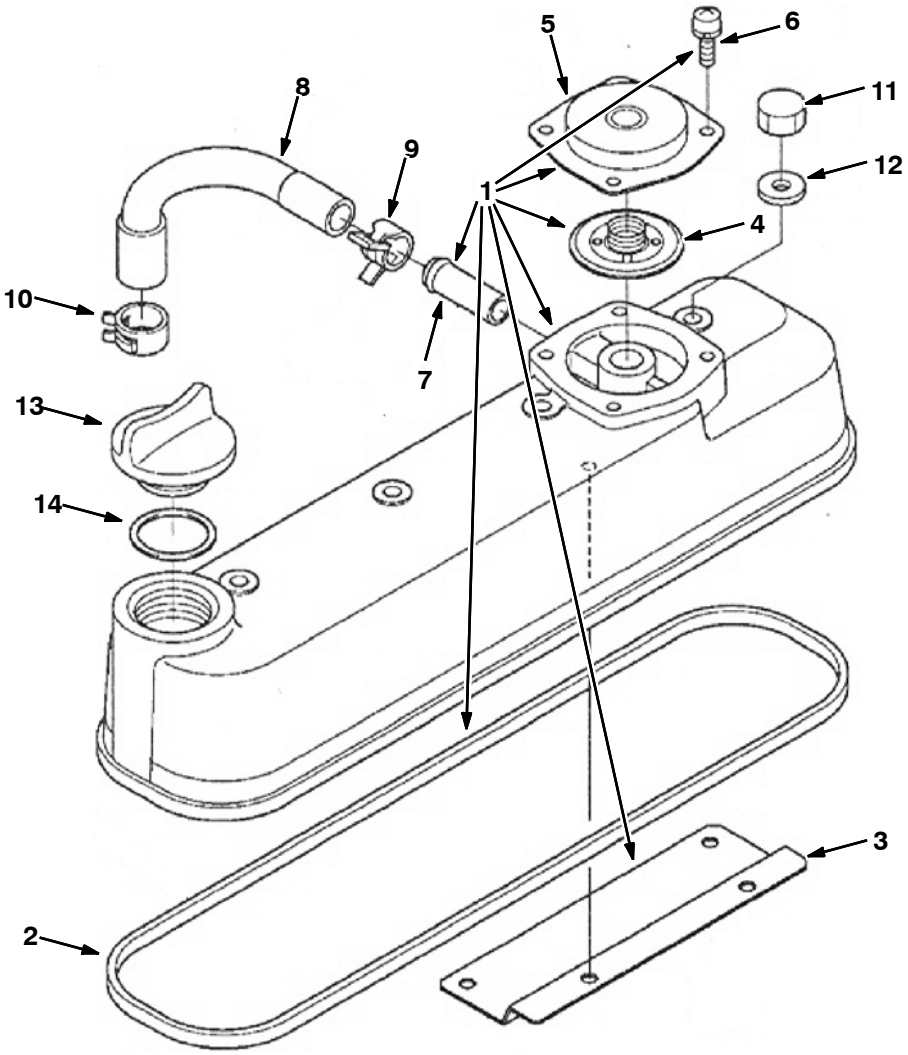

	Ref.	Part No.	Description	Qty.
▽	1	9004433	Cover, Cyl Head Assy [Ku]	1
▲	2	70929	Gasket, Cover, Head, Cyl [Ku]	1
▲	3	372912	Shield, Breather	1
▲	4	372928	Valve, Breather, Complt	1
▲	5	384874	Cover, Breather	1
▲	6	73482	Screw, Hex, W/ Washer [Ku]	4
▲	7	30125	Pipe, Water	1
	8	372913	Tube, Breather	1
	9	372901	Clamp, Hose	1
	10	372904	Clamp, Hose	1
	11	73483	Nut, Hex, Cap	4
	12	73484	Gasket, F/ Bolt [Ku]	4
	13	361374	Cap, Filler, Oil [Ku]	1
	14	70913	Seal, Org	1

Fig. 8 - Manifold Group

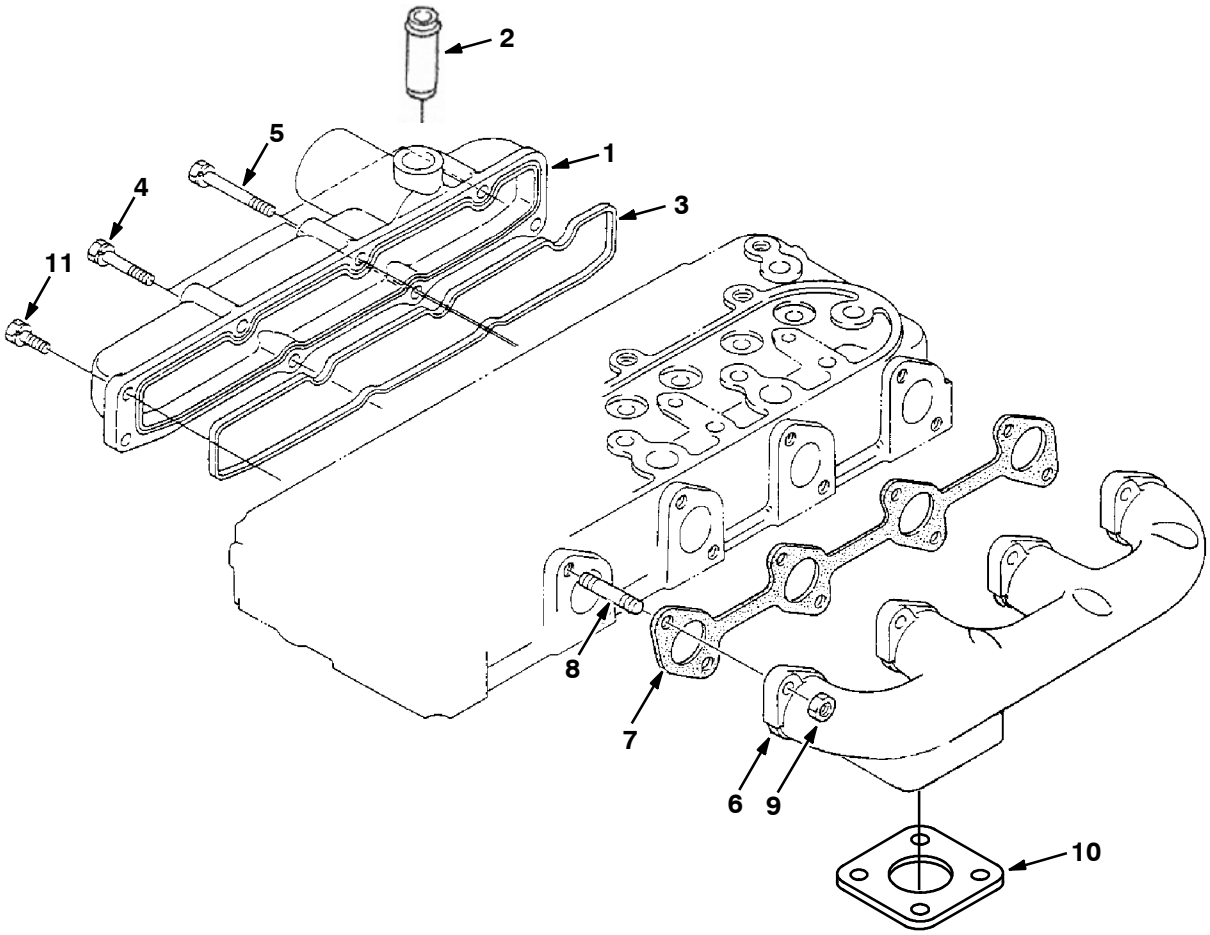

	Ref.	Part No.	Description	Qty.
▽	1	372905	Manifold Assy, Inlet	1
▲	2	73481	Pipe, Breather [Ku]	1
▲	3	70934	Gasket, Manifold, Intake [Ku]	1
	4	9004406	Bolt [Ku]	2
	5	384872	Bolt	3
	6	73487	Manifold, Exhaust [Ku]	1
	7	70935	Gasket, Manifold, Exhaust	1
	8	73488	Stud [Ku]	8
	9	73489	Nut	8
	10	51332	Gasket [Ku]	1
	11	40409	Screw, Hex [Ku]	3

Fig. 9 - Valve, Rocker Arm Group

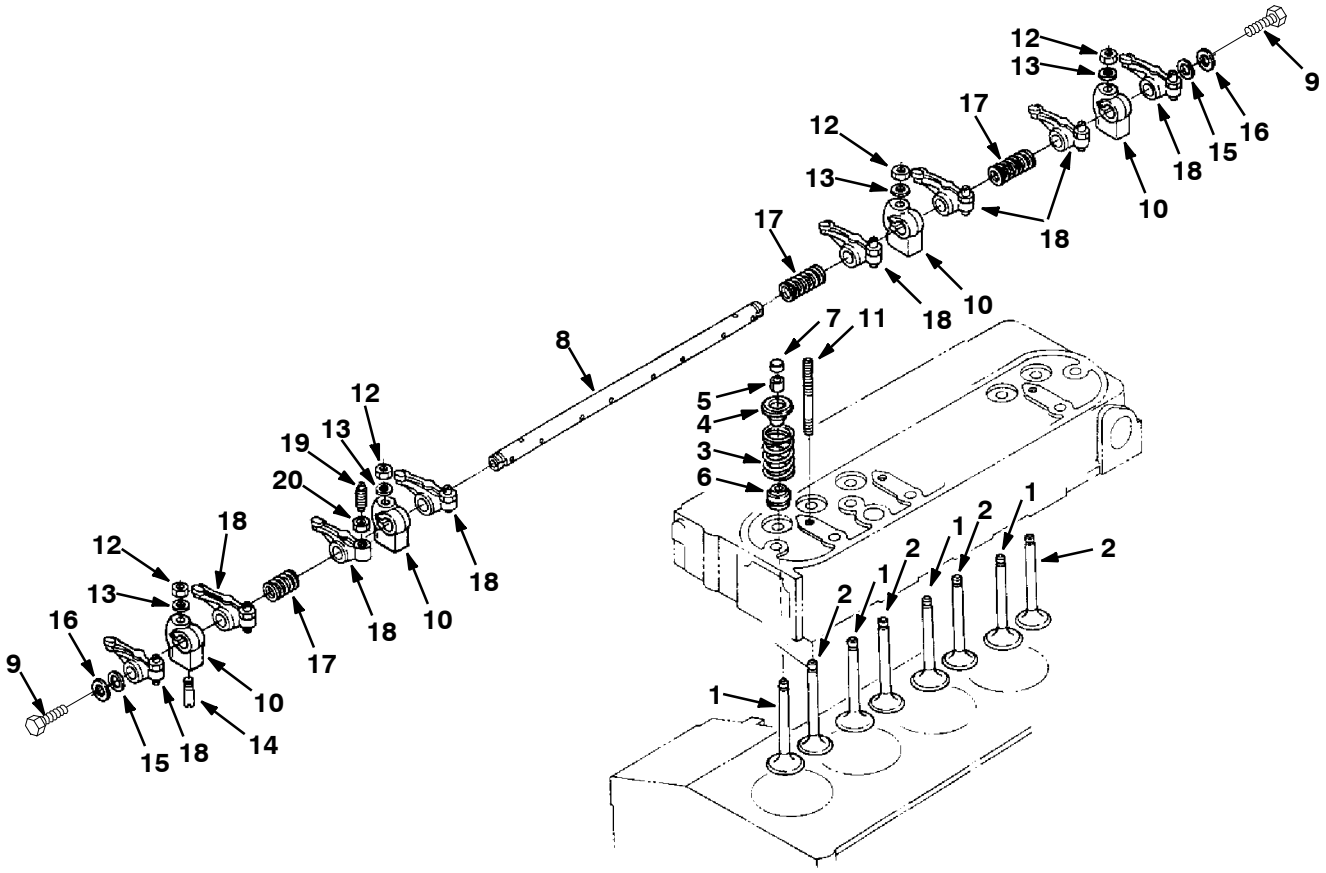

	Ref.	Part No.	Description	Qty.
	1	70936	Valve, Intake [Ku]	4
	2	70937	Valve, Exhaust [Ku]	4
	3	73491	Spring, Valve [Ku]	8
	4	73492	Retainer, Spring, Valve [Ku]	8
	5	73493	Retainer, Spring [Ku]	8
	6	73494	Seal, Stem, Valve [Ku]	8
	7	361392	Cap, Valve [Ku]	8
	8	9004409	Shaft, Rocker, Arm [Ku]	1
	9	393598	Bolt	2
	10	73497	Bracket, Mtg, Rocker Arm [Ku]	4
	11	73498	Stud [Ku]	4
	12	73499	Nut, Hex [Ku]	4
	13	73500	Washer, Flat [Ku]	4
	14	9004410	Pin, Spring [Ku]	1
	15	73502	Washer, Shaft, Rocker [Ku]	2
	16	361589	Washer, Flat [Ku]	2
	17	73504	Spring, Cmpr, Rocker [Ku]	3
▽	18	73506	Arm, Rocker [Ku]	8
▲	19	73507	Screw, Adj, Rocker Arm [Ku]	8
▲	20	73508	Nut, Hex [Ku]	8

Fig. 10 - Fuel Camshaft Group

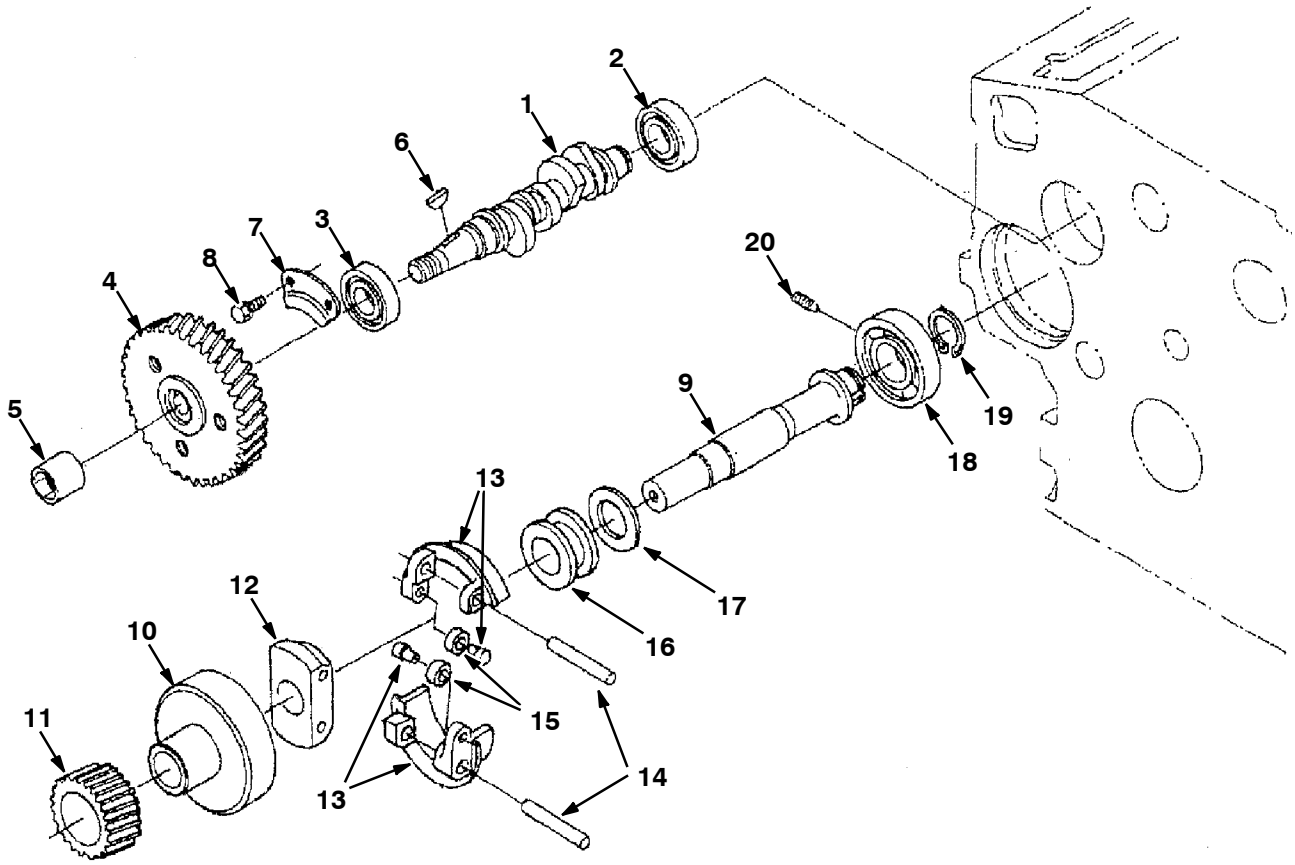

	Ref.	Part No.	Description	Qty.
	1	84636	Camshaft	1
	2	9004368	Bearing, Ball [Ku]	1
	3	9004369	Bearing, Ball [Ku]	1
	4	9004445	Gear, Injection, Pump [Ku]	1
	5	73593	Nut, Cap, Cam [Ku]	1
	6	73594	Key, Woodruff [Ku]	1
	7	73596	Stopper, Fuel [Ku]	1
	8	41973	Bolt, Hex [Ku]	2
▽		73597	Shaft, Govnr	1
▲	9	9004371	Shaft, Governor [Ku]	1
▲	10	73598	Holder, Gear [Ku]	1
▲	11	73599	Gear, Govnr [Ku]	1
▲	12	73600	Holder, Govnr [Ku]	1
▲	13	73601	Weight, Comp, Govnr [Ku]	2
▲	14	73602	Shaft, Govnr [Ku]	2
▲	15	9004372	Shaft, Governor, Weight [Ku]	2
▲	16	70977	Sleeve, Govnr [Ku]	1
▲	17	70978	Washer, Thrust [Ku]	1
	18	9004373	Bearing, Ball [Ku]	1
	19	73603	Ring, Snap [Ku]	1
	20	73604	Screw, Set [Ku]	1

Fig. 11 - Camshaft Group

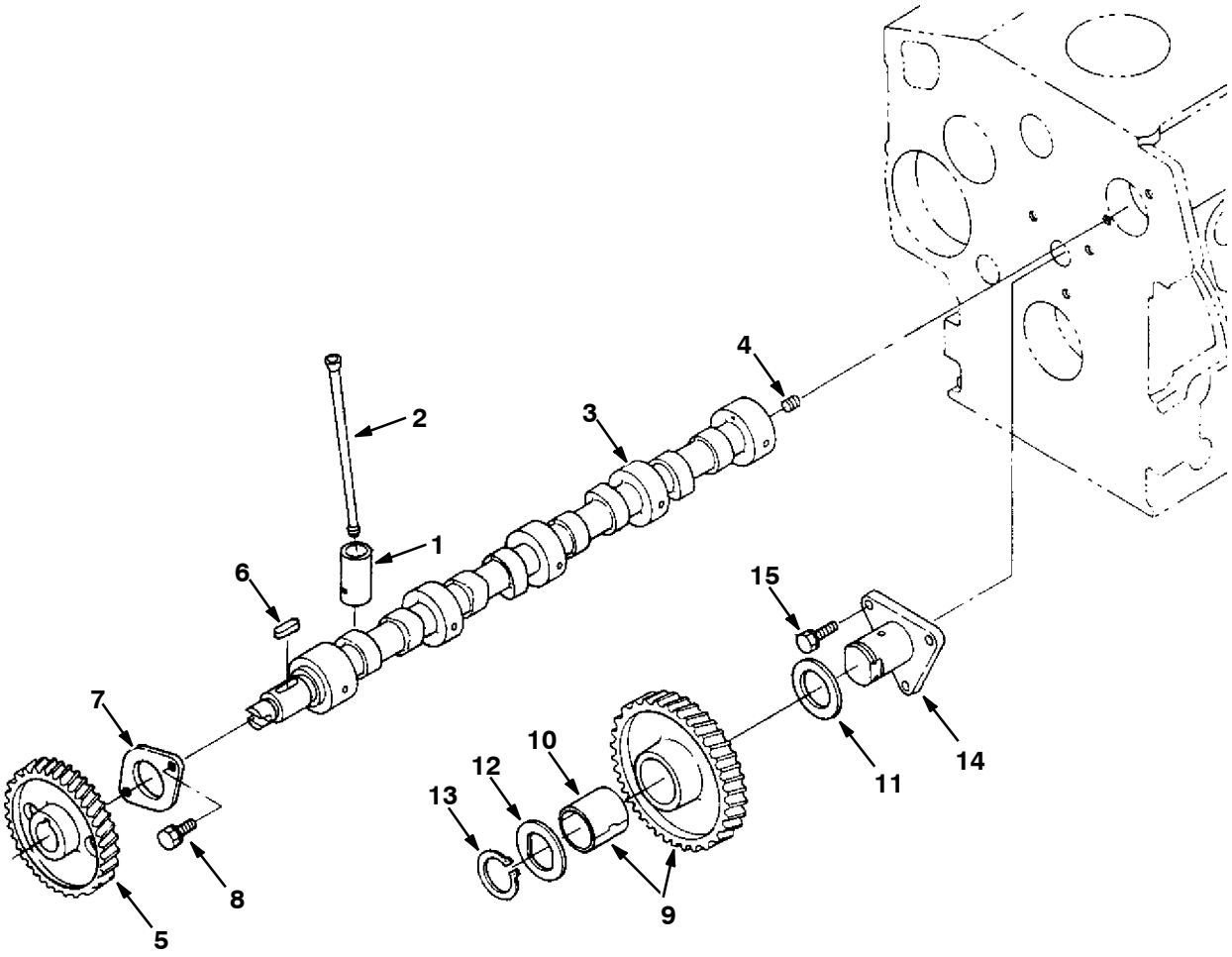

Fig. 11 - Camshaft Group

	Ref.	Part No.	Description	Qty.
	1	9004358	Tappet [Ku]	8
	2	73509	Rod, Push, Valve [Ku]	8
▽	3	9004440	Crankshaft Assy	1
▲	4	39197	Screw, Set [Ku]	1
▲	5	73511	Gear, Camshaft [Ku]	1
▲	6	73512	Key [Ku]	1
▲	7	73513	Stopper, Cam [Ku]	1
▲	8	41973	Bolt, Hex [Ku]	2
▽	9	73514	Gear, Idler, Cam [Ku]	1
▲	10	73515	Bushing, Gear, Idler [Ku]	1
	11	73516	Collar, Gear [Ku]	1
	12	73517	Washer, Collar, Gear [Ku]	1
	13	73518	Ring, Snap [Ku]	1
	14	73519	Shaft, Idler, Gear [Ku]	1
	15	41973	Bolt, Hex [Ku]	3

Fig. 12 - Piston and Crankshaft Group

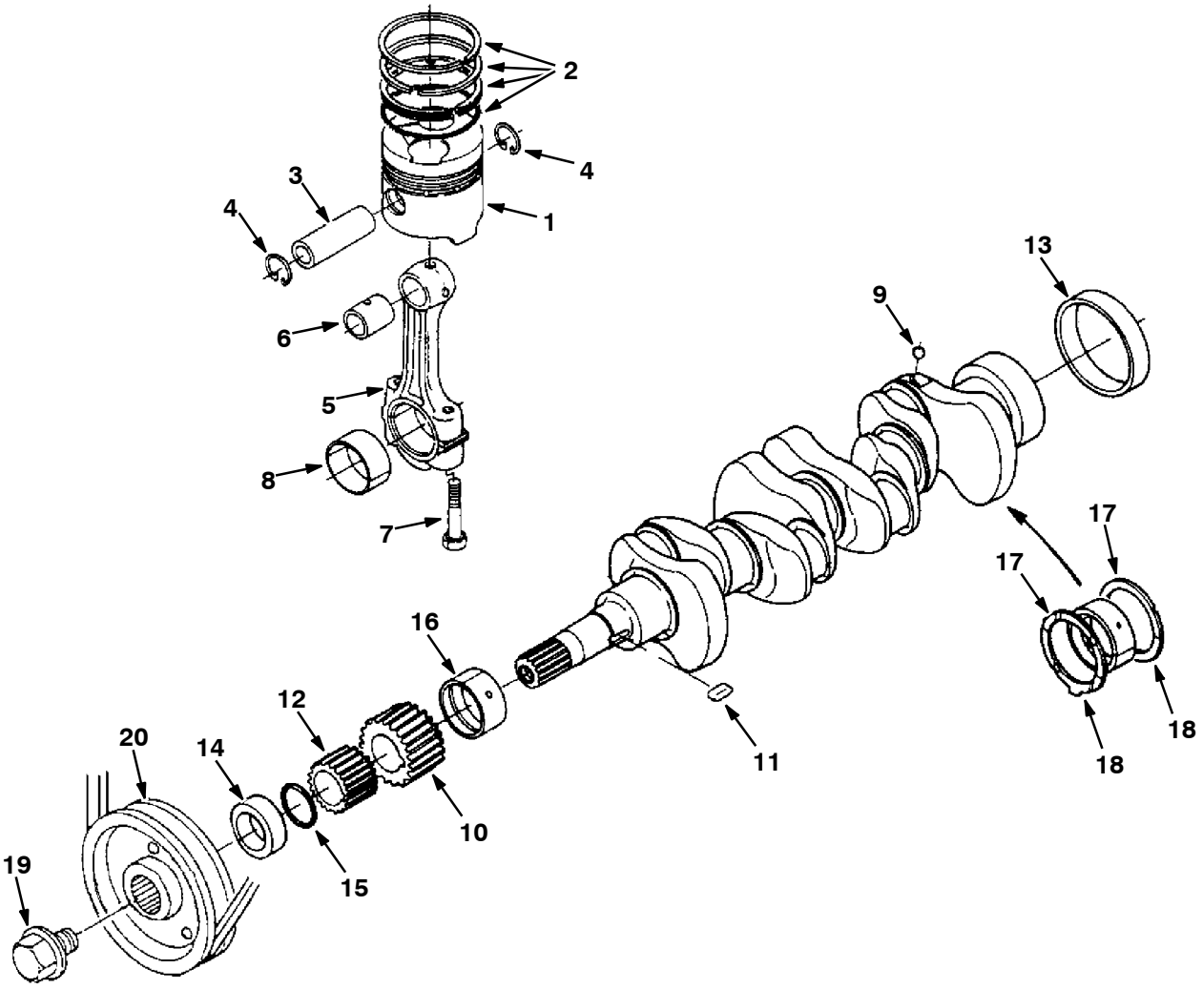

Fig. 12 - Piston and Crankshaft Group

	Ref.	Part No.	Description	Qty.
	1	73520	Piston, Eng [Ku]	4
	1	73521	Piston, Eng [Ku]	4
	2	9004361	Ring, Piston Assy [Ku]	4
	2	9004441	Piston, Ring Assy [Ku]	4
	3	73522	Pin, Piston [Ku]	4
	4	73523	Ring, Snap, Piston [Ku]	8
▽	5	73524	Rod Assy, Connecting [Ku]	4
▲	6	361395	Bushing, Pin, Piston [Ku]16241-21351	4
▲	7	73525	Screw, Rod, Connecting [Ku]	8
▲	8	70941	Bearing, Rod, Connecting, Std [Ku]	4
▲	8	66204	Bearing, Rod, Connecting [-.2mm, Ku]	4
▲	8	66207	Bearing, Rod, Connecting [-.4mm, Ku]	4
▽		73526	Crankshaft	1
▲	9	73527	Ball, Cshft [Ku]	4
▲	10	73528	Gear, Cshft [Ku]	1
▲	11	73529	Key [Ku]	1
▲	12	73530	Gear, Pump, Oil [Ku]	1
▲	13	70942	Bearing, Cshft [Ku]	1
	14	70943	Collar, Crank, Front [Ku]	1
	15	9004363	Ring [Ku]	1
	16	70945	Bearing, Cshft, Std [Ku]	1
	16	70946	Bearing, Cshft, -.2mm [Ku]	1
	16	70947	Bearing, Cshft [Ku]	1
	17	10844	Bearing, Thrust, Std [Ku]	2
	17	70954	Bearing, Thrust [Ku]	2
	17	70955	Bearing, Thrust [-.4mm, Ku]	2
	18	10845	Bearing, Thrust, Std [Ku]	2
	19	73532	Screw, Hex, Cshft [Ku]	2
	20	393400	Sheave, Cshft [Ku]	2

Fig. 13 - Flywheel Group

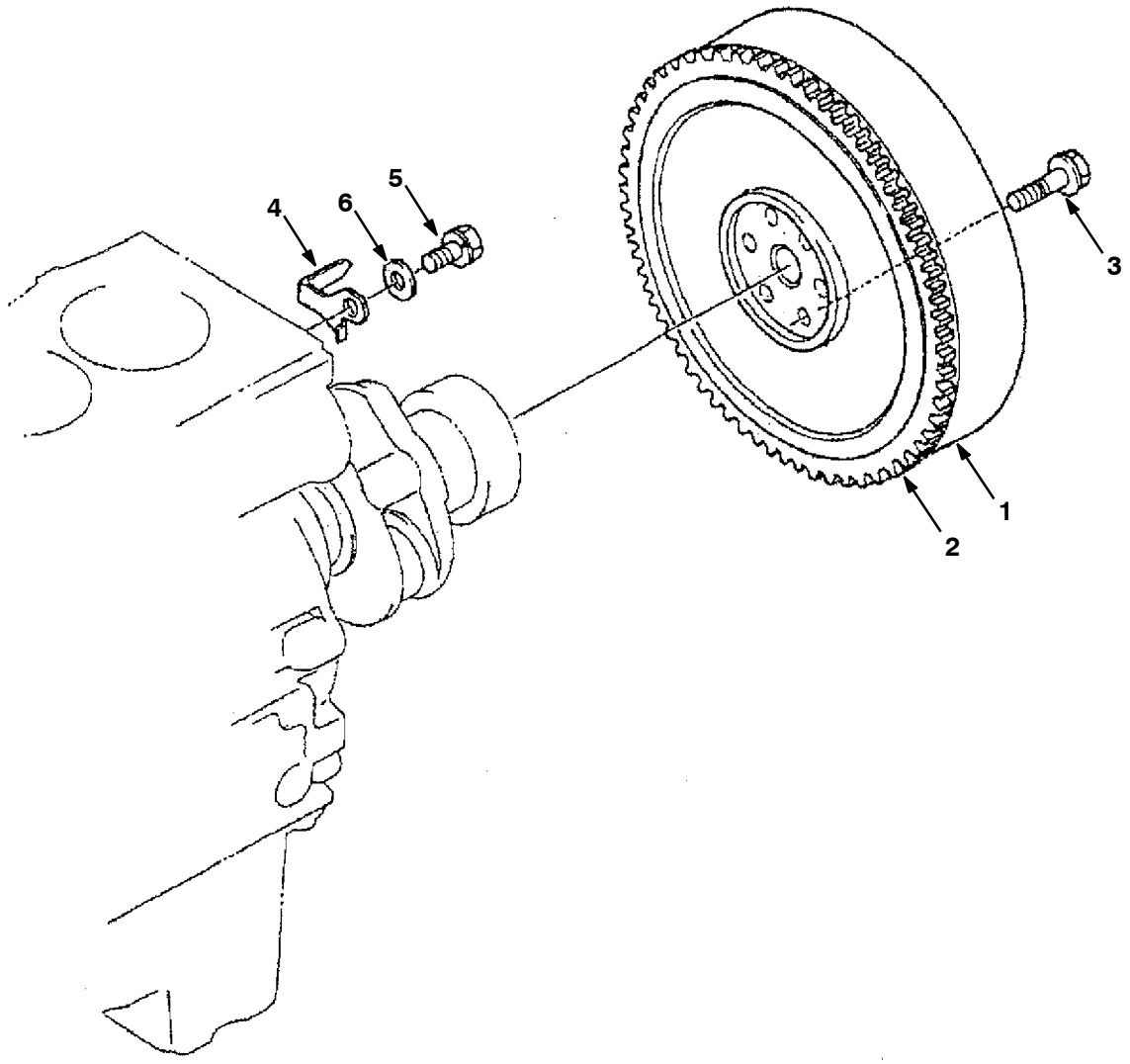

	Ref.	Part No.	Description	Qty.
▽	1	70956	Flywheel	1
▲	2	9004442	Gear, Ring [Ku]	1
	3	73533	Screw, Hex, Flywheel [Ku]	6
	4	9003891	Indicator, Timing [Ku]	1
	5	9004443	Bolt [Ku]	1
	6	9004444	Washer, Plain [Ku]	1

Fig. 14 - Starter Breakdown, 74405

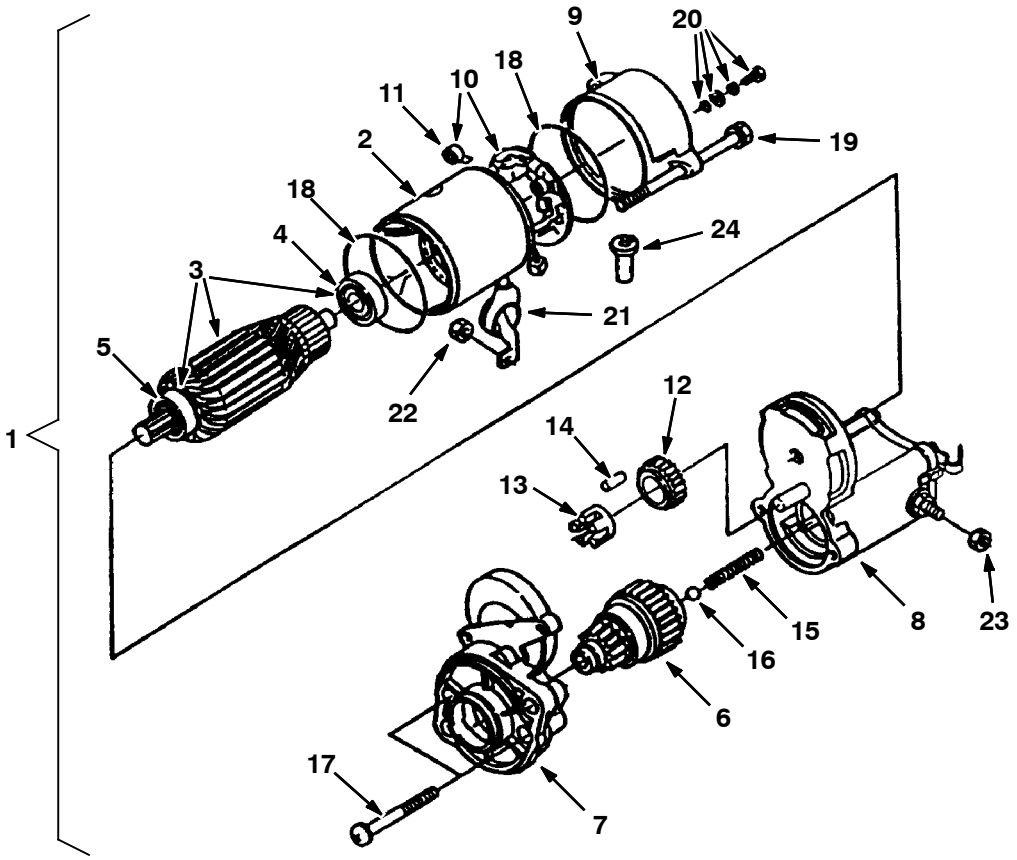

	Ref.	Part No.	Description	Qty.
▽	1	74405	Starter, 12vdc [Kubota]	1
▲	2	70196	Yoke	1
▲▽	3	70197	Armature, Motor [Ku]	1
▲▲	4	70198	Bearing	1
▲▲	5	70199	Bearing	1
▲	6	70200	Clutch	1
▲	7	70201	Frame, End, Drive	1
▲	8	70202	Switch, Magneto [Ku]	1
▲	9	70203	Frame, End	1
▲▽	10	70204	Brushholder	1
▲▲	11	70205	Spring, Brush	4
▲	12	70206	Gear	1
▲	13	70207	Retainer	1
▲	14	73545	Retainer, Gear, Starter [Ku]	5
▲	15	70208	Spring	1
▲	16	73547	Spring, Ext [Ku]	1
▲	17	70209	Bolt	2
▲	18	20433	Seal, Org	2
▲	19	70210	Bolt	2
▲	20	20432	Bolt	2
▲	21	70211	Cover	1
▲	22	73551	Nut, Hex [Ku]	1
▲	23	70212	Nut	1
▲	24	70213	Tube, Drain, Starter	1

Fig. 15 - Nozzle Holder and Glow Plug Group

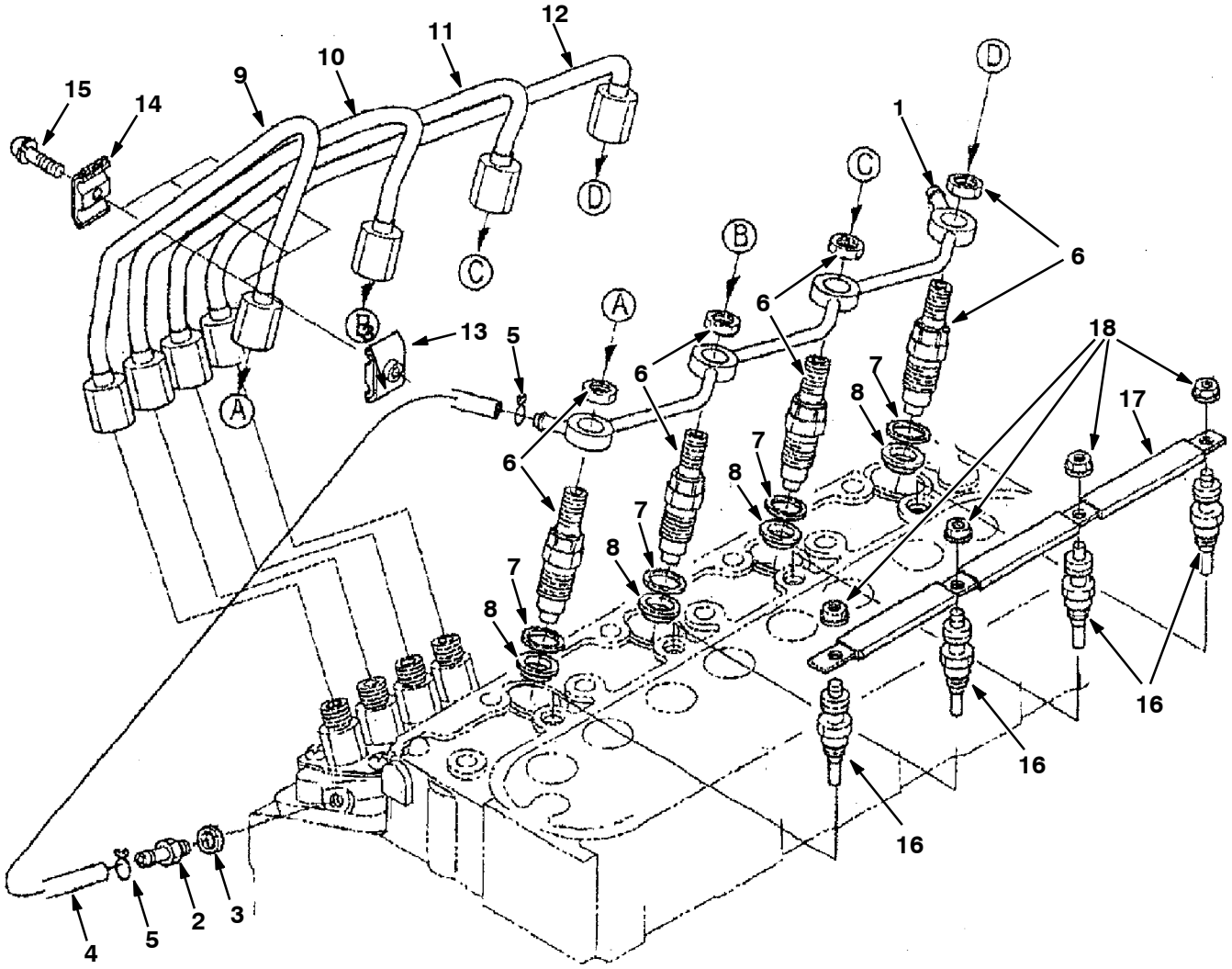

	Ref.	Part No.	Description	Qty.
	1	73554	Pipe, Overflow	1
	2	73555	Fitting, Fuel [Ku]	1
	3	40166	Gasket, F/ Bolt [Ku]	1
▽		361373	Hose, Fuel [Ku]	1
▲	4	9004389	Pipe, Fuel, Overflow [Ku]	2
▲	5	9004390	Pipe, Clip [Ku]	4
▽	6	372917	Housing Assy, Nozzle	1
▲	7	9004450	Gasket [Ku]	1
▲	8	9004451	Seal, Heat [Ku]	1
	9	70965	Tube, Injector, Pipe #1 [Ku]	1
	10	70966	Tube, Injector, Pipe #2 [Ku]	1
	11	70967	Tube, Injector, Pipe #32 [Ku]	1
	12	70968	Pipe, Injector, # 4	3
	13	30131	Clamp, Tube, Inj, Pipe #1 [Ku]	3
	14	39507	Clamp, Pipe	4
	15	393566	Screw, W / Washer	1
	16	84638	Glowplug [Ku]	3
	17	73560	Cord, Ele, Glowplug	3
	18	9004393	Nut, Flange [Ku]	3

Fig. 16 - Nozzle Holder Breakdown

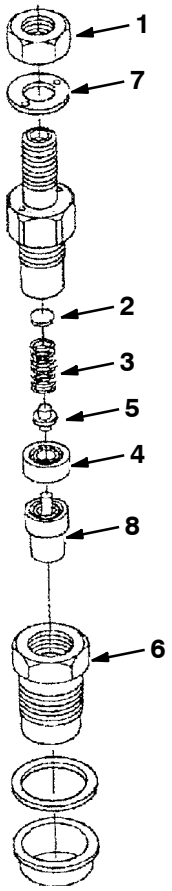

	Ref.	Part No.	Description	Qty.
▽		372917	Housing Assy, Nozzle	4
▲	1	9004395	Nut [Ku]	1
▲	2	9004396	Washer, Adjusting [Ku]	1
▲	3	9004397	Nozzle, Spring [Ku]	1
▲	4	388500	Spacer [Ku]	1
▲	5	9004398	Rod, Push [Ku]	1
	6	9004399	Nut, Nozzle [Ku]	1
	7	9004400	Washer, Plain [Ku]	1
	8	9001101	Fender, Lh	1

Fig. 17 - Injection Pump Group

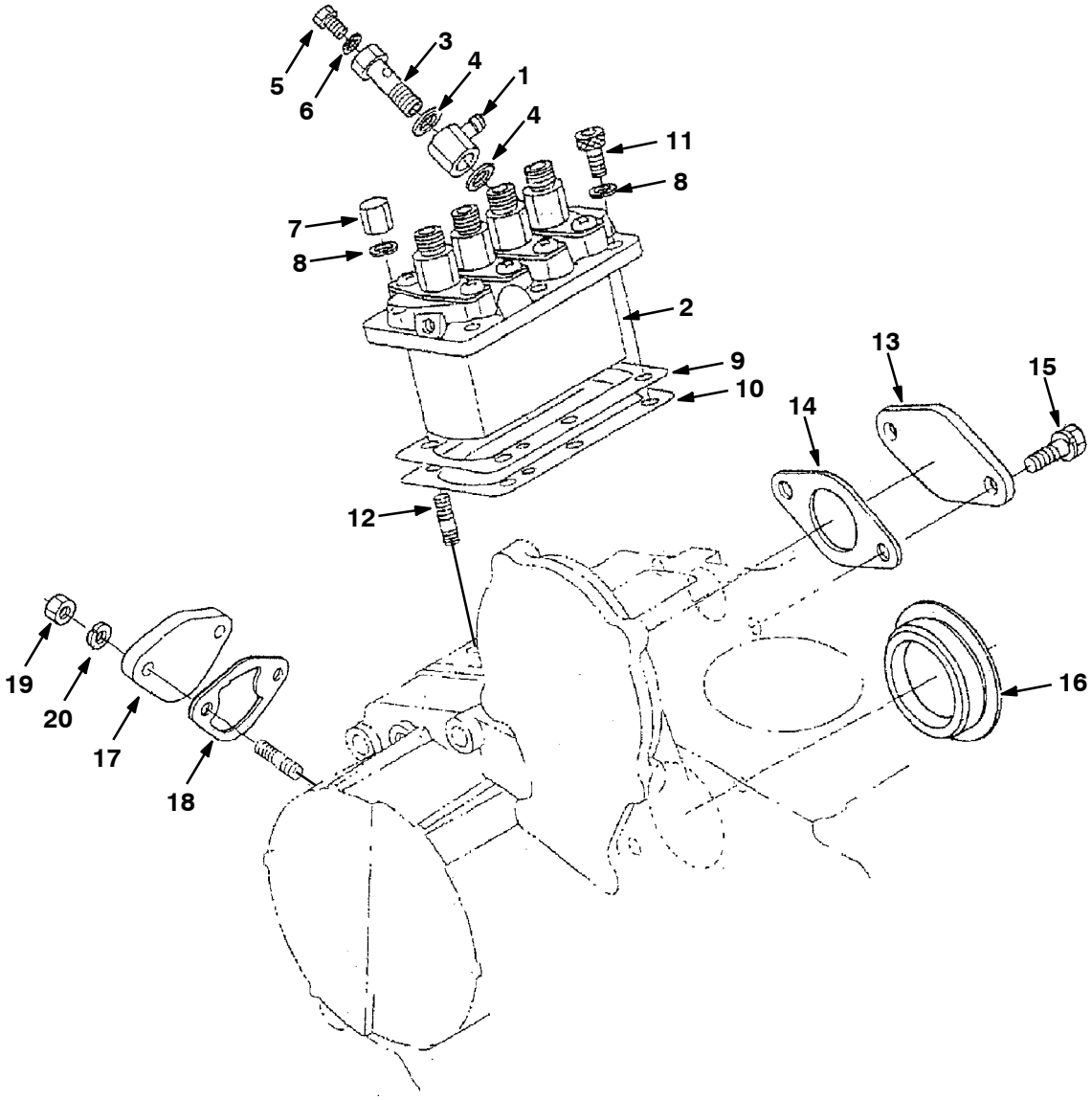

Fig. 17 - Injection Pump Group

	Ref.	Part No.	Description	Qty.
	1	9004376	Eye, Joint [Ku]	1
▽	2	84635	Pump, Injection [Kubo]	1
▲	3	84651	Follower, Screw, Pump, Injection[Ku]	1
▲	4	73588	Gasket, Ftg, Banjo [Ku]	2
▲	5	73589	Screw, Hex [Ku]	1
▲	6	73590	Gasket, F/ Screw [Ku]	1
	7	73563	Nut [Ku]	3
	8	39065	Washer, Lock, Split [Ku]	6
	9	70972	Shim	1
	9	70973	Shim	1
	10	84644	Shim, Pump, Injection	1
	11	73561	Bolt [Ku]	3
	12	73562	Stud [Ku]	3
	13	9004454	Cover, Solenoid [Ku]	1
	14	70165	Gasket, Solenoid, Throttle [Ku]	1
	15	39160	Bolt, Hex [Ku]	2
	16	70188	Cover, Hole, Pump [Ku]	1
	17	73565	Cover, Hole, Pump, Fuel [Ku]	1
	18	70974	Gasket, Pump, Fuel [Ku]	1
	19	39121	Nut, Hex [Ku]	2
	20	39065	Washer, Lock, Split [Ku]	2

Fig. 18 - Injection Pump Breakdown

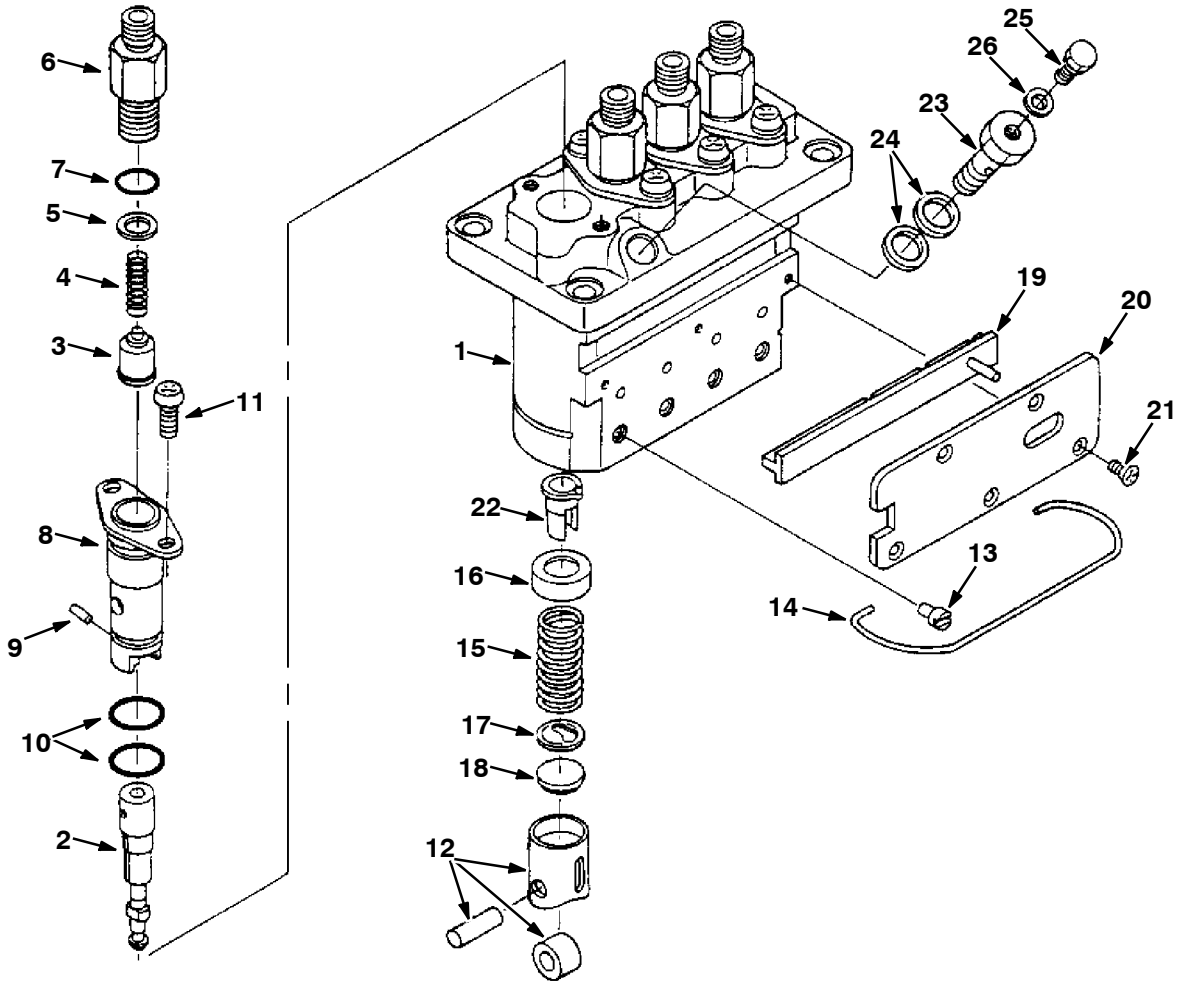

Fig. 18 - Injection Pump Breakdown

	Ref.	Part No.	Description	Qty.
▽	1	84635	Pump, Injection [Kubo]	1
▲	2	84648	Plunger, Pump, Inj [Ku]	4
▲	3	73567	Valve, Eng [Delivery, Ku]	4
▲	4	73568	Spring, Cmpr, Valve, Injector [Ku]	4
▲	5	73569	Gasket, Valve, Injector [Ku]	4
▲	6	73570	Holder, Valve, Inj [Ku]	4
▲	7	73571	Seal, Org [Ku]	4
▲	8	73572	Flange, Sleeve [Ku]	4
▲	9	73573	Pin, Joint, Inj [Ku]	4
▲	10	73574	Seal, Org [Ku]	8
▲	11	73575	Screw, Hex [Ku]	8
▲	12	73576	Tappet, Pump, Injection [Ku]	4
▲	13	73577	Pin, Tappet [Ku]	4
▲	14	73578	Pin, Clamp	1
▲	15	73579	Spring, Cmpr, Plunger [Ku]	4
▲	16	73580	Seat, Spring, Upper, Injector [Ku]	4
▲	17	73581	Seat, Spring, Lower, Injector [Ku]	4
▲	18	73582	Shim, Tappet, Injection [Ku]	1
▲	19	84649	Control, Fuel	1
▲	20	84650	Plate	1
▲	21	73585	Screw, Pump, Injection [Ku]	5
▲	22	73586	Sleeve, Cntrl, Pump, Injection [Ku]	4
▲	23	84651	Follower, Screw, Pump, Injection[Ku]	1
▲	24	73588	Gasket, Ftg, Banjo [Ku]	2
▲	25	73589	Screw, Hex [Ku]	1
▲	26	73590	Gasket, F/ Screw [Ku]	1

Fig. 19 - Idling Group

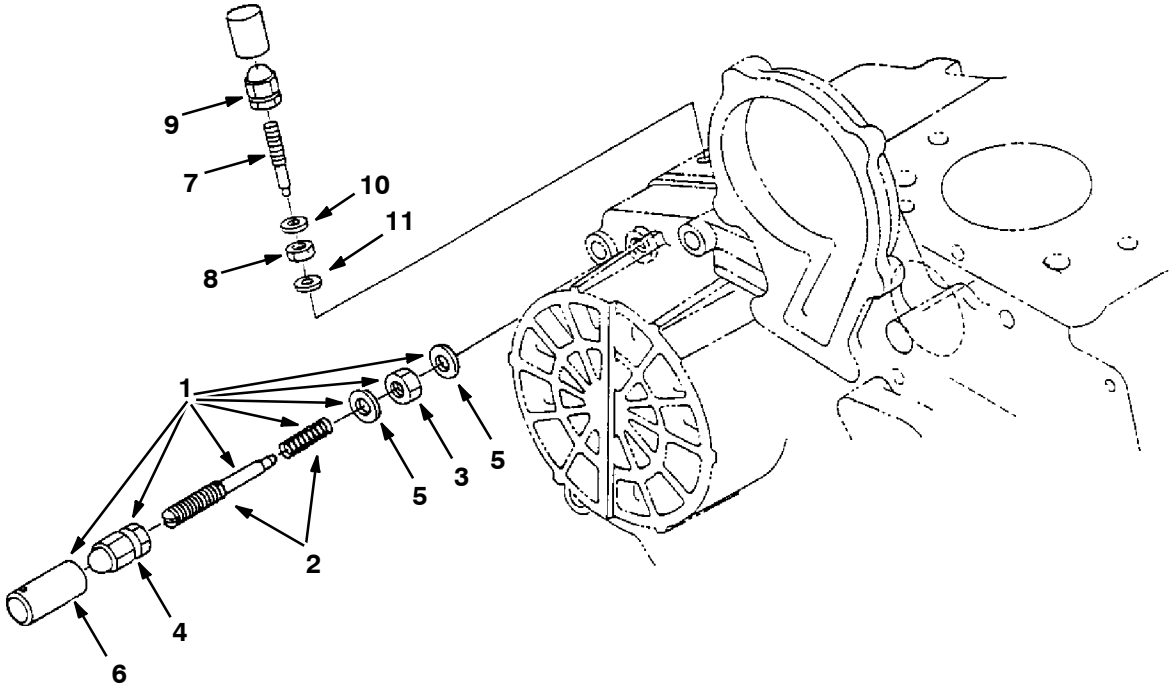

	Ref.	Part No.	Description	Qty.
▽	1	9004446	Idling, Apparatus [Ku]	1
▲	2	9004447	Bolt, Adjustment Assy [Ku]	1
▲	3	73606	Nut, Hex [Ku]	1
▲	4	361375	Nut, Cap [Ku]	1
▲	5	40166	Gasket, F/ Bolt [Ku]	2
▲	6	30136	Cap, Screw, Idler [Ku]	1
	7	73610	Screw, Adj, Stop [Ku]	1
	8	9004374	Nut, Lock [Ku]	1
	9	361375	Nut, Cap [Ku]	1
	10	40166	Gasket, F/ Bolt [Ku]	2
	11	9004375	Gasket [Ku]	1

Fig. 20 - Speed Control Plate Group

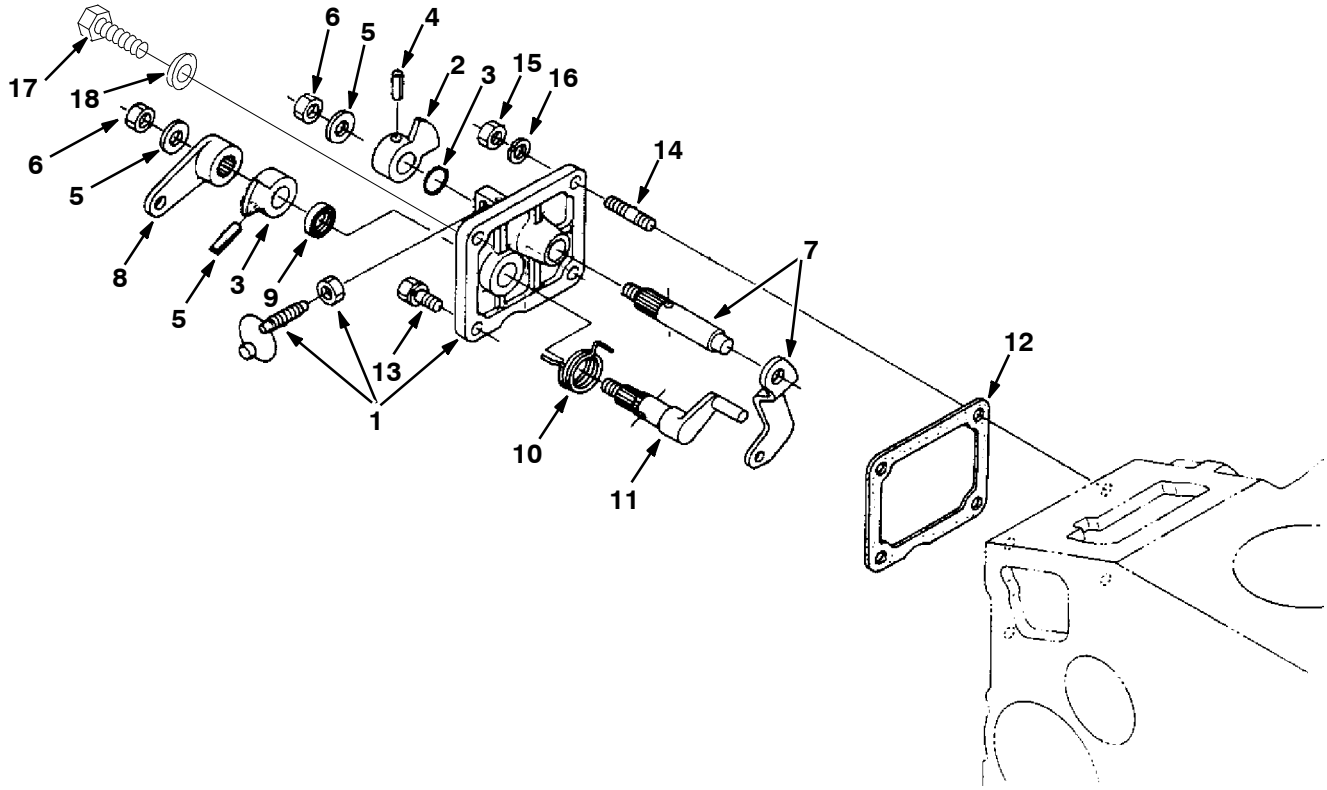

07445 - M20, D

	Ref.	Part No.	Description	Qty.
▽	1	70982	Plate, Cntrl, Spd [Ku]	1
▲	2	73619	Lever, Cntrl, Spd [Ku]	2
▲	3	9004385	O-Ring [Ku]	1
▲	4	40407	Pin, Spring [Ku]	2
▲	5	73621	Washer, Flat [Ku]	2
▲	6	73622	Nut, Hex [Ku]	2
▲	7	73623	Lever, Plate, Cntrl [Ku]	1
▲	8	73624	Lever, Stop [Ku]	1
▲	9	70983	Seal, Oil [Ku]	1
▲	10	73625	Spring, Tors [Ku]	1
▲	11	73626	Shaft, Lever, Spd [Ku]	1
	12	70984	Gasket, Cover, Spd [Ku]	1
	13	41973	Bolt, Hex [Ku]	2
	14	9004386	Stud [Ku]	2
	15	39121	Nut, Hex [Ku]	2
	16	39065	Washer, Lock, Split [Ku]	2
	17	9004449	Bolt [Ku]	1
	18	40166	Gasket, F/ Bolt [Ku]	1

Fig. 21 - Governor Group

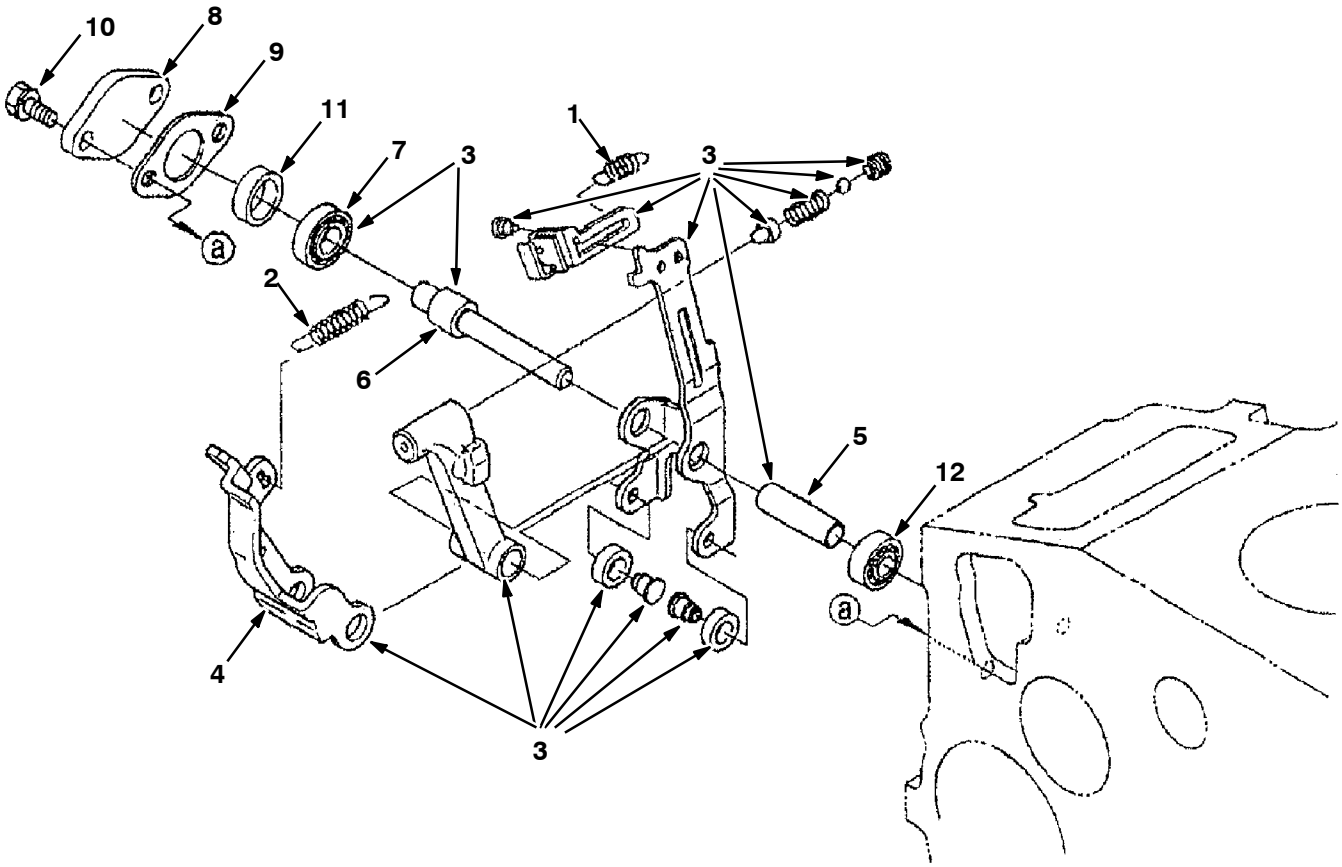

07447 - M20, D

	Ref.	Part No.	Description	Qty.
	1	9004379	Spring, Start [Ku]	1
	2	9004448	Spring, Governor [Ku]	1
▽	3	9004775	Lever Assy, Fork [KU]	1
▲	4	9004381	Lever, Fork [Ku]	1
▲	5	9004382	Lever, Fork, Shaft [Ku]	1
▲	6	9004283	Belt Kit, W/ Installation Tool	1
▲	7	70989	Bearing, Ball [Ku]	1
	8	73631	Cover, Lever, Gov [Ku]	1
	9	361430	Gasket, Cover, Gov [Ku]	1
	10	71995	Screw, Hex [Ku]	2
	11	70991	Collar, Govnr [Ku]	1
	12	70992	Bearing, Ball [Ku]	1

Fig. 22 - Water Flange Group

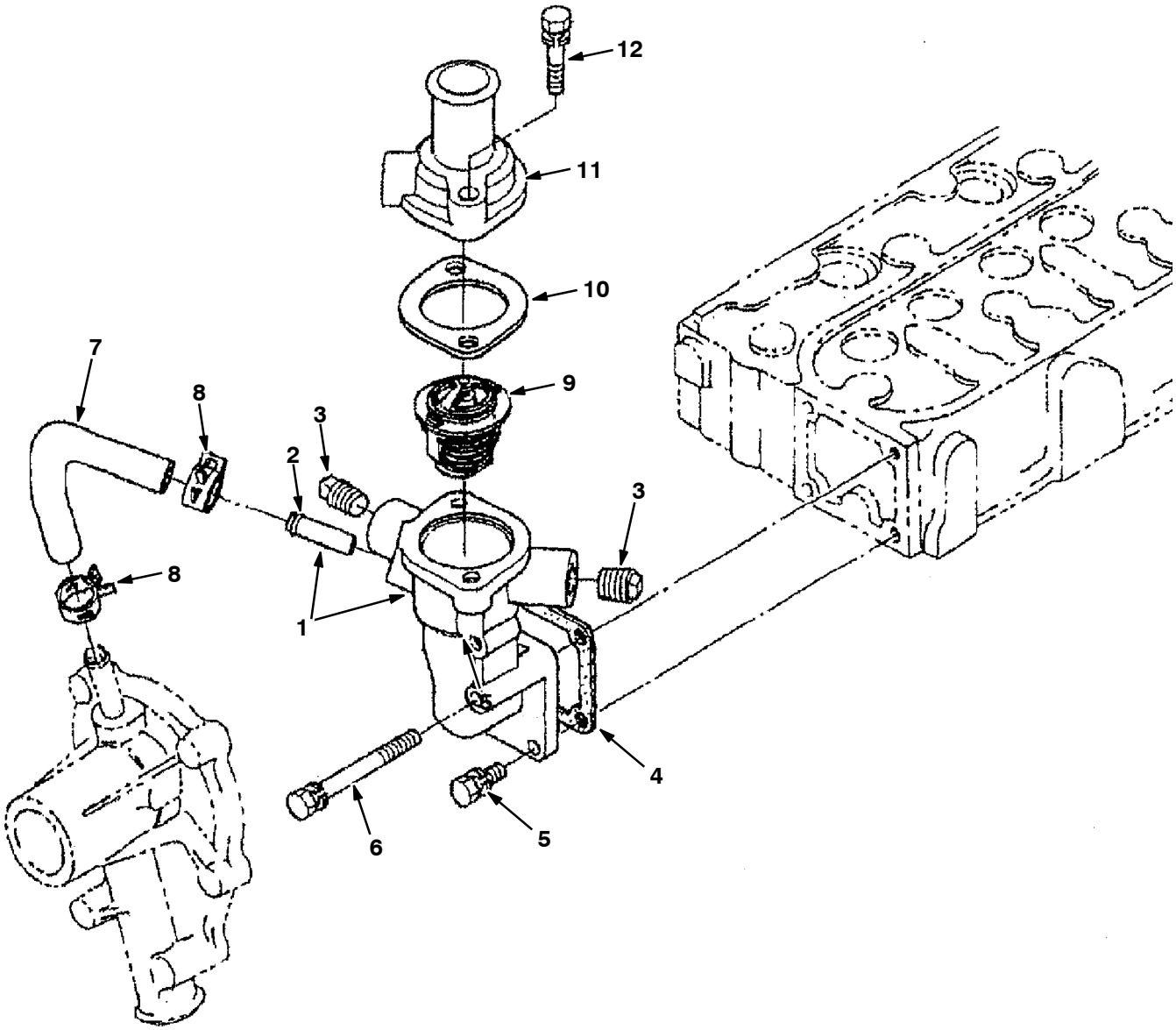

	Ref.	Part No.	Description	Qty.
▽	1	368090	Flange, Water [Ku]	1
▲	2	384859	Pipe, Water, Return	1
	3	73632	Fitting, Pipe, Plug [Ku]	2
	4	70994	Gasket, Hsg, Thermostat [Ku]	1
	5	41973	Bolt, Hex [Ku]	3
	6	384872	Bolt	1
	7	73633	Hose, Water [Ku]	1
	8	73634	Clamp, Hose, Heater [Ku]	2
	9	10852	Thermostat, 180deg, 1.7d [Ku]	1
	10	10851	Gasket	1
	11	368091	Housing, Thermostat [Ku]	1
	12	40418	Bolt [Ku]	2

SECTION 7

CONTENTS **PAGE**

PART NUMBER TO PAGE NUMBER CROSS REFERENCE LIST 7-2
PART DESCRIPTION TO PAGE NUMBER CROSS REFERENCE LIST 7-15

PART NUMBER TO PAGE NUMBER CROSS REFERENCE LIST

Part Number	Page Number
C460919	2-175
CD001	2-25
00500-15	4-2
00960	2-101
01314	2-115
01684	2-75, 2-117
01685	2-9, 2-11, 2-49, 2-105
01754	3-25
01760	2-19, 2-23
01762	2-117
02351	2-45
02706	4-17, 4-19
02850	2-7, 2-17, 2-19, 2-21, 2-89, 2-91, 2-101, 3-23
03026	2-47
03192	2-39
03193	2-97
04706	2-37
04733-2	2-89
06537	2-39
06549	2-93, 2-95, 2-105, 3-3, 3-5, 3-7, 3-9, 3-15, 3-17, 3-39
06926	2-35
06927	2-19, 2-21, 2-89, 2-91, 2-101
06928	2-17
06932	3-15
06933	2-17, 2-43, 3-3, 3-5, 3-7, 3-9, 3-17, 3-39
06934	2-43, 3-15, 3-17
06935	3-3, 3-5, 3-7, 3-9, 3-15
06938	2-43, 3-3, 3-5, 3-7, 3-9
06940	3-29
06941	2-57
06942	2-99, 3-15, 3-17
06943	2-101, 3-31
06944	2-79, 2-141, 2-143
06945	2-63, 2-77
06955	2-25, 2-73, 2-115, 3-31
06960	2-99
06961	2-37
06962	2-57, 2-59, 2-87, 2-115
06963	2-39, 2-111
06965	2-107, 3-11
06966	2-39, 3-31
06969	2-69, 2-71, 2-143
06971	2-95
06974	2-65
06975	2-117
06977	2-117
07259	2-93, 2-95
07299	2-39
07450	2-113
07471	2-141
07785	3-3, 3-5, 3-7, 3-9
07786	2-101
07788	2-9, 2-11
07789	2-17, 2-93, 2-95, 3-15
07790	2-15, 2-21, 2-25, 2-29, 2-40, 2-49, 2-51, 2-53, 2-59, 2-85, 2-87, 3-5, 3-9, 3-31
07791	2-7, 2-19, 2-21, 2-23, 2-25, 2-27, 2-45, 2-51, 2-53, 2-57, 2-61, 2-63, 2-75, 2-89, 2-91, 2-107, 2-109, 2-135, 2-141, 3-25, 3-31
07792	2-13, 2-15, 2-103, 3-31
07805	2-117
07810	2-115
07819	3-17
07934	2-143
08175	2-107, 2-117
08178	2-75
08179	2-105, 2-113
08182	2-69, 2-75, 2-105, 2-107, 2-111, 2-115, 3-11
08202	2-69, 2-71
08236	2-85, 2-87
08329	2-61, 2-63
08708	2-31, 2-33, 2-37, 2-43, 2-45, 2-57, 2-63, 2-77, 2-79, 2-81, 2-83, 2-101, 2-141, 2-143, 3-15, 3-17, 3-29, 3-31
08709	2-7, 2-25, 2-39, 2-47, 2-49, 2-51, 2-53, 2-57, 2-59, 2-73, 2-77, 2-89, 2-93, 2-95, 2-101, 2-105, 2-107, 2-111, 2-113, 2-115, 2-117, 2-135, 2-149, 3-11
08711	2-65, 2-69, 2-71, 2-117
08712	1-1, 2-75, 2-79, 2-85, 2-87
08713	1-1, 2-81, 2-83, 2-85, 2-87, 2-103, 2-105, 3-23
08714	2-97, 3-3, 3-7
08716	3-3, 3-5, 3-7, 3-9
09007	2-75
09010	2-9, 2-11, 2-75, 2-85, 2-87, 2-117
09011	2-61, 2-85
09088	2-69
09120	2-117
09145	3-3, 3-5, 3-7, 3-9
09164	3-15, 3-17
09200	2-15, 3-17
09244	2-113, 3-7, 3-9, 3-38
09252	2-93, 2-95
09570	2-63
09740	2-61, 3-23
09771	2-79
09893	2-101
1005229	1-1, 2-66
1005740	2-115
1007220	2-115
1007807	2-117
1007953	2-141, 2-143
1011123	3-11
1012615	2-31, 2-33
1013031	2-51, 2-53
1013117	2-51, 2-53
10143	2-49
1014563	2-59
1015205	2-59
1015261	3-27
1015273	2-25
1015274	2-21
1015314	2-59
1015911	2-103
1016029	3-25
1016314	2-49, 3-29
1016383	2-55
1016563	3-29
1016827	2-45
1017126	1-1, 2-45
1017141	2-175
1017218	2-29, 2-81, 2-85, 2-101, 2-103
1018289	2-135
1020341	3-15, 3-17
1021265	2-37
1021579	1-1, 2-135
1022105	2-17
1022569	2-63
1023144	5-4, 6-4
1023486	2-123, 2-127, 2-131
1023853	2-57
1023862	2-63
1024249	2-63
1024260	2-35, 2-37, 4-5
1024478	2-35, 2-37
1025132	2-135
1025133	2-135
1025196	2-27
1025990	2-123, 2-127, 2-131

Part Number	Page Number
1026019	2-65
1026317	2-93, 2-95
1026459	2-111, 3-11
1026462	2-111, 3-11
1026525	2-111, 3-11
1026605	2-73
1026610	2-73
1026681	2-83
1026688	2-75
1026755	2-85, 2-87
1026798	1-1, 2-81, 2-83
1026825	2-15
1026833	2-65
1026841	2-71
1026856	2-71
1026879	1-1, 2-85, 2-87
1027079	2-63
1027148	2-51
1027149	2-99
1027188	2-39
1027273	2-39
1027293	2-65
1027317	2-65
1027332	2-65
1027380	2-5
1027531	2-77
1027533	2-77
1027589	2-57, 2-59
1027651	2-77
1027756	2-61, 4-13
1027798	3-3, 3-5, 3-7, 3-9
1027800	3-3, 3-5, 3-7, 3-9
1028094	2-63
1028146	2-71
1028159	2-71
1028190	2-63
1028201	2-13, 2-15
1028246	2-77
1028252	2-7
1028492	2-61
1028560	2-137
1028750	2-31
1028790	2-31, 2-33
1028832	2-31, 2-33
1029018	2-39
1029061	2-127, 2-131
1029105	3-29
1029183	2-27
1029238	2-89, 2-91
1029254	2-141, 4-17
1029255	2-143
1029280	2-89, 2-91
1029580	2-9
1029674	2-107, 2-109
1029682	2-107, 2-111, 3-11
1029689	2-49
1029704	2-107
1029709	2-107
1029801	2-11
1029951	2-31, 2-33
1030102	2-93, 2-95
1030218	1-1, 2-85, 2-87
1030306	2-57, 2-59
1030374	2-141, 2-143
1030451	2-103
1030475	2-57
1030498	2-137, 2-139
1030553	2-13
1030572	2-57
1030585	2-21
1030587	2-13
1030588	2-15, 2-21
1030592	3-25
1030593	2-21, 2-25
1030622	2-101
1030626	2-57
1030646	2-13
1030813	2-31
1030972	2-173
1030973	3-3, 3-5, 3-7, 3-9
1030985	2-31, 2-33
1031026	2-57, 2-59
1031027	2-57
1031051	2-137
1031122	2-101
1031207	3-25
1031211	2-31
1031503	2-7, 2-97
1031566	2-57, 2-59
1031616	3-23
1031621	2-35
1031623	2-21, 2-59
1031625	2-17
1031641	2-27
1031664	2-31, 2-33
1031665	2-105
1031683	2-31
1031820	2-55
1031892	2-55
1031916	3-11
1031921	2-77
1031939	2-77
1032012	1-1, 2-9, 2-11
1032067	3-19, 3-21
1032069	3-19
1032108	2-39
1032119	2-47
1032147	2-19
1032184	2-39
1032193	2-23
1032262	3-19, 3-21
1032315	2-13, 2-15
1032393	2-63
1032416	2-23
1032429	2-115
1032432	2-115
1032449	2-115
1032456	2-63
1032488	2-71
1032515	1-1, 2-71
1032545	2-81, 2-83, 3-15
1032584	3-15, 3-17
1032707	3-15, 3-17
1032722	3-19, 3-21
1032752	3-15, 3-17
1032812	2-45
1032821	2-81
1032894	2-19
1032915	2-135
1032919	2-39
1032950	2-131, 2-133
1032962	2-19, 2-21
1032993	2-63
1032995	2-63
1033034	2-63
1033201	2-13
1033237	2-77
1033286	2-13, 2-15
1033287	2-13, 2-15
1033288	2-13, 2-15
1033291	2-17
1033343	2-9, 2-11
1033520	2-173
1033575	2-45
1033578	2-7
1033607	2-19
1033630	2-45
1033670	2-123, 2-127, 2-131
1033685	2-149, 4-26
1033746	2-45
1033760	2-31, 2-33
1033771	2-31, 2-33
1033788	2-137, 2-139
1033863	2-105
1033883	2-31, 2-33
1033884	2-31
1033897	2-45
1033914	2-141, 2-143
1033915	2-141, 2-143
1033916	2-141
1033969	2-35, 2-37
1033995	2-75, 2-77, 2-79
1034133	2-77
1034168	1-1, 2-81, 2-83
1034191	3-3, 3-5, 3-7, 3-9
1034244	2-77
1034254	2-19
1034358	2-19
1034378	2-19, 2-21
1034455	2-69
1034462	2-69
1034501	2-111
1034547	2-57
1034614	2-81
1034671	2-147, 4-9
1034760	2-105
1034763	2-105
1034803	2-35
1034806	2-61
1034854	2-13

Part Number	Page Number
1034864	2-19, 2-89
1034910	2-75
1034943	2-63
1034978	2-97
1035138	2-65
1035144	2-149
1035153	2-31, 2-33
1035293	2-99
1035400	2-115
1035483	2-101
1035488	2-65
1035506	2-99
1035507	2-31, 2-33
1035510	2-101
1035619	2-77
1035620	2-75
1035660	2-81, 2-83, 3-15
1035684	1-1, 2-81, 2-83
1035807	2-19
1035808	2-19
1035809	2-19
1035810	2-19
1035811	2-23
1035812	2-27
1035813	2-45
1035815	2-27
1035826	2-75
1035857	2-51
1035889	2-173
1035922	2-63
1035999	2-39
1036014	2-31, 2-33
1036027	2-71
1036103	2-51, 2-53
1036111	3-3, 3-7
1036157	2-79
1036173	3-3, 3-5, 3-7, 3-9
1036183	3-7, 3-9
1036185	2-123, 2-127, 2-131
1036188	2-131
1036193	2-123, 2-127
1036194	2-123, 2-127
1036195	2-131
1036197	2-131
1036199	2-135
1036201	2-127, 2-131, 3-12
1036202	2-131
1036206	2-131
1036207	2-131
1036208	2-131
1036209	2-131
1036210	2-131
1036211	2-131
1036230	3-29
1036333	2-111, 3-11
1036377	2-47
1036489	2-17
1036500	2-17
1036502	2-17
1036513	2-19, 2-23
1036519	2-81, 2-83
1036564	3-31
1036608	2-13, 3-33
1036702	2-105
1036802	2-99
1036819	2-7
1036844	2-49
1036847	2-49
1036859	2-49
1036892	2-9, 2-11, 2-13, 2-15, 2-21, 2-25, 2-29, 2-40, 2-45, 2-49, 2-57, 2-59, 3-5, 3-9
1036906	2-123, 2-127
1036913	2-7
1036985	3-3, 3-7, 3-9
1036995	3-3, 3-5, 3-7, 3-9
1037082	2-63
1037088	2-101
1037098	2-63
1037099	2-81, 2-83
1037139	2-79
1037162	2-123, 2-127
1037265	2-105
1037335	2-85, 2-87
1037345	1-1, 2-9, 2-11, 2-45, 2-85, 2-87
1037346	2-7, 2-13, 2-15, 2-17, 2-19, 2-21, 2-23, 2-25, 2-27, 2-43, 2-45, 2-49, 2-51, 2-53, 2-57, 2-59, 2-75, 2-81, 2-83, 2-91, 2-107, 2-109, 2-113, 2-135, 2-137, 3-23, 3-33
1037354	2-27, 2-39, 2-47, 2-57, 2-71, 2-85, 2-89, 2-105, 2-111, 2-113, 2-135, 3-31
1037355	2-7, 2-47, 2-59, 2-69, 2-71, 2-93, 2-95, 2-107, 2-113
1037358	2-13, 2-15, 2-63, 2-65, 2-103, 2-105, 2-113, 2-115, 3-19, 3-21, 3-23, 3-31, 3-36, 3-37
1037476	2-105
1037786	2-45
1038037	1-1, 2-81
1038060	2-105
1038070	2-93
1038101	2-105
1038160	2-99
1038172	2-99
1038176	2-85, 2-87, 2-115
1038209	2-47
1038329	2-105
1038353	1-1, 2-81
1038360	2-75
1038372	2-105
1038387	2-173
1038570	2-55
1038738	2-13, 2-15
1038806	2-13, 2-15
1038896	2-105
1038915	2-93, 2-95
1038922	2-93
1038959	2-13, 2-15
1039007	3-15
1039008	3-15
1039020	3-15
1039038	3-15
1039057	2-93, 2-95
1039067	3-15
1039127	2-101
1039141	2-111, 3-11
1039199	2-111, 3-11
1039208	2-49
1039210	2-141
1039212	2-49
1039228	2-105
1039286	2-65
1039290	2-53
1039295	2-53
1039309	2-141
1039320	2-9, 2-11
1039327	2-65
1039340	2-141
1039388	2-53
1039389	2-53
1039425	2-13
1039483	2-141
1039501	2-117
1039517	2-71
1039520	2-71
1039523	2-71
1039553	2-105
1039586	2-123, 2-127
1039628	2-111
1039649	3-11
1039735	3-3, 3-5, 3-7, 3-9
1039752	2-79
1039753	2-123, 2-127, 2-131
1039812	2-89
1039846	2-101
1039853	2-101
1039883	2-85, 2-87
1039907	2-85
1039914	2-95
1039916	2-85, 2-87
1039942	2-89
1039948	2-101
1039971	2-89, 2-91
1039999	2-89, 2-91
1040019	2-113, 3-7, 3-9
1040082	2-89
1040091	2-145, 4-7

Part Number	Page Number
1040096	2-39
1040118	2-89
1040126	3-31
1040146	2-7
1040162	2-75
1040198	2-79
1040276	2-83
1040363	2-17
1040400	2-83
1040408	2-83
1040467	2-37, 2-43, 2-45, 2-51, 2-53, 2-57, 2-59, 2-81, 2-83, 2-85, 2-87, 2-113, 2-115, 3-15, 3-23
1040564	2-103
1040590	2-83
1040707	2-27
1040753	2-113, 2-115
1040756	2-103
1040759	2-85, 2-87
1040761	2-75
1040812	2-103
1040816	2-19, 2-21
1040835	2-43
1040962	2-35
1041034	2-111, 3-11
1041102	2-5
1041123	2-113
1041237	2-101
1041383	2-123, 2-127, 2-131
1041385	2-123, 2-127, 2-131
1041386	2-123, 2-127, 2-131
1041392	2-123, 2-127, 2-131
1041393	2-61
1041446	2-115
1041473	3-15, 3-17
1041539	2-113
1041558	2-63
1041754	3-15, 3-17
1041839	2-57
1041870	3-31
1041873	2-31, 2-33
1041882	3-15, 3-17
1041925	3-17
1041941	2-123, 2-127, 2-131
1041944	3-17
1041967	2-81, 2-83
1042004	2-131, 2-133
1042021	2-73
1042024	2-73
1042027	2-103
1042047	2-99
1042097	2-5
1042101	1-1
1042327	2-93
1042328	2-93
1042463	2-101
1042493	3-17
1042511	3-17
1042515	2-61, 2-63
1042518	3-17
1042661	3-17
1042718	3-15, 3-17
1042785	2-113
1042791	2-9, 2-11
1042812	2-9
1042829	2-11
1042831	3-17
1042855	2-113
1042868	3-17
1042885	3-36
1042888	3-36
1042973	2-93, 2-95
1043045	3-31
1043049	3-12
1043066	2-135
1043092	2-103
1043176	3-36, 3-37
1043183	3-36
1043372	2-175
1043373	2-175
1043610	2-51
1043613	2-51
1043652	2-145, 2-147
1043751	2-19, 2-47
1043754	2-141, 2-143
1043755	2-141, 2-143
1043759	2-57
1043760	2-19
1043762	2-19
1043869	2-103
1043896	2-57
1043927	2-103
1043996	2-19
1044095	2-85
1044109	2-63
1044229	2-57
1044279	3-29
1044391	2-57
1044419	1-1, 2-85, 2-87
1044420	1-1, 2-85, 2-87
1044691	2-13, 2-15
1044752	2-53
1044754	2-53
1044764	2-81, 2-83
1044768	2-81, 2-83
1044939	2-81
1044950	1-1, 2-85, 2-87
1044992	2-45
1044998	2-99
1045024	2-57
1045033	3-31
1045061	2-103
1045063	3-29
1045101	3-19
1045109	2-99
1045125	2-135
1045128	2-101
1045151	3-31
1045153	3-31
1045155	3-31
1045156	3-31
1045203	3-31
1045224	2-7
1045232	2-101
1045348	1-1, 2-7
1045352	2-9, 2-11
1045354	1-1, 2-9, 2-11
1045357	1-1, 2-81, 2-83
1045359	1-1, 2-81
1045366	1-1, 2-9, 2-11
1045434	2-99
1045487	2-31, 2-33, 2-105
1045525	2-17, 3-33
1045681	3-31
1045764	2-57, 2-59
1045865	2-43
1045888	3-29
1045947	3-40
1045964	2-113, 2-115
1045999	2-43
1046048	2-113
1046052	2-113
1046109	2-137
1046121	2-123, 2-127, 2-131
1046406	2-19, 2-27
1046408	2-89
1046413	2-19
1046418	2-27
1046426	2-13, 2-15
1046428	2-9, 2-11, 2-103
1046613	2-45
1046632	4-11
1046890	2-117
1046893	2-31
1046928	2-95
1046929	2-95
1046946	3-31
1046993	3-15, 3-17
1047015	3-15, 3-17
1047073	2-85, 2-87
1047096	2-85, 2-87
1047225	3-31
1047418	2-81, 2-83
1047420	2-81, 2-83
1047543	2-81, 2-83
1047618	2-173
1047619	2-173
1047720	2-63
1047741	2-175
1047806	2-63
1047929	2-63
1048061	2-63
1048072	2-63
1048084	2-63
1048261	2-17
1048335	2-103
1048353	2-103
1048740	3-23

Part Number	Page Number
1048743	3-23
1048891	1-1, 2-85, 2-87
1048932	2-17
1048955	2-17
1048997	2-101
1049017	3-23
1049061	3-23
1049158	2-81, 2-83
1050295	3-23
1050757	2-40
1051052	2-17
1051863	2-59
1052552	2-59
1053164	2-103
1053318	2-25
1053361	2-103
1053523	2-67
1054236	2-139
1054256	2-107, 2-109, 3-11
1054382	2-57, 2-59
1054428	2-57, 2-59
1054664	2-139
1054842	2-19
1054901	2-61, 4-15
1054905	2-141, 4-19
1055002	2-59
1055029	2-55
1055564	2-59
1056406	2-57
1056407	2-57
1056769	2-31, 2-33
1056828	2-15
1057337	2-117
1057338	2-107, 2-109, 3-11
1057643	2-117
1057707	1-2
1057708	1-2
1057710	1-2
1057711	1-2
1057776	2-21
1057778	2-21
1057786	2-21
1057875	2-15
1057880	2-15
1057890	2-47
1057934	2-91
1057936	2-91
1057942	2-91
1057961	2-25
1057999	2-57
1058092	2-81, 2-83
1058108	2-15
1058133	1-1, 3-31
1058273	2-15
1058404	2-59
1058670	2-59
1058784	2-37
1058785	2-37
1058807	2-37
1058996	2-35, 2-37
1059052	2-59
1059211	2-21
1059221	2-29
1059223	2-81, 2-83
1059252	3-23, 3-25
1059269	2-25
1059276	2-25
1059278	2-91
1059285	2-25
1059286	2-25
1059291	2-25
1059307	2-15
1059339	2-91
1059440	2-21
1059468	2-55
1059477	2-21
1059478	2-21
1059479	2-21
1059481	2-21
1059516	2-21
1059520	2-21
1059532	2-51, 2-53
1059868	2-29
1059874	2-21, 2-29
1059996	2-21
1060009	2-59
1060343	2-59
1060413	2-89, 2-91
1060449	2-21
1060546	3-37
1060586	3-23
1060639	2-21
1060648	3-25
1060763	2-105
1060764	2-111
1060765	2-99
1061000	2-21
1061016	3-21
1061047	2-175
1061048	2-175
1061140	3-5, 3-9
1061145	2-21
1061146	2-21
1061147	2-21
1061162	3-37
1061203	3-5, 3-9
1061498	2-59
1061503	2-59
1061629	3-37
1061961	1-1, 2-69
1062083	3-23
1062084	3-23
1062944	3-27
1062952	3-27
10632	3-25
10632-14	3-5, 3-9
10632-4	2-101
10632-8	2-13
10632-9	3-5, 3-9
1064528	2-15
1065452	2-123, 2-125, 2-127, 2-129
1065453	2-123, 2-125, 2-127, 2-129
1065781	2-141
1066063	2-91
1066893	2-17
1066933	3-25
1066952	3-23
1066957	3-27
1066972	3-25
1066980	3-27
1067052	2-117
1067053	2-141
1067054	2-139
1067055	2-101
1067057	2-143
1067058	2-133
1067059	2-93, 2-95
1067083	2-125, 2-129, 2-133
1067084	2-125, 2-129
1067085	2-133
1067086	2-129, 2-133
1067087	2-125, 2-129, 2-133
1067088	2-129, 2-133, 3-11
1067089	2-125, 2-129, 2-133
1067090	2-125, 2-129, 2-133
1067092	2-133
1067093	2-133
1067094	2-133
1067095	2-133
1067096	2-133
1067097	2-125, 2-129
1067098	2-133
1067099	2-125, 2-129
1067100	2-133
1067101	2-125, 2-129
1067102	2-125, 2-129
1067103	2-133
1067104	2-125, 2-129, 2-133
1067105	2-125, 2-129, 2-133
1067106	2-125, 2-129, 2-133
1067107	2-125, 2-129, 2-133
1067108	2-125, 2-129, 2-133
1067109	2-125, 2-129, 2-133
1067110	2-125, 2-129, 2-133
1067112	2-125, 2-129, 2-133
1067113	2-125, 2-129
1067114	2-133
1067115	2-125, 2-129, 2-133
1067153	2-133
1067154	2-133
1067177	2-139
1067178	2-141, 2-143
1067179	2-141, 2-143
1067180	2-141
1067181	2-141
1067182	2-141
1067185	2-139
1067186	2-139

Part Number	Page Number
1067187	2-139
1067216	3-27
1067217	3-25
1067298	2-133
1067299	2-125, 2-129
1067300	2-125, 2-129
1067301	2-133
1067661	3-11
1067662	3-11
1067773	2-135
1067869	3-23
1067870	3-25
1067872	3-23
1067873	3-25
1067874	3-23
1067875	3-23
1067876	3-27
1067877	3-27
1067878	3-23
1067879	3-27
1067880	3-27
1067881	3-27
1067884	3-27
1067885	3-27
1067886	3-25
1067887	3-25
1067889	3-27
1067890	3-27
1067891	3-23
1067895	3-27
1067907	3-27
1067909	3-25
1067910	3-25
1067911	3-23
1067912	3-34
1067917	3-25
1067918	3-23
1067919	3-27
1068299	2-139
1068687	3-25
1068688	3-25
1068689	3-25
1068690	3-25
1068751	3-25
1068947	3-40
1069019	1-2
1069020	1-2
1069201	3-25
1069210	3-23
1069211	3-23
1069229	3-25
1069231	3-25
1069232	3-23
1069310	3-25
1069311	3-27
1069312	3-27
1069313	3-27
1069314	3-25
1069315	3-25
1069316	3-23
1069317	3-25
1069318	3-25
1069322	3-27
1069326	3-23, 3-25, 3-27
1069330	3-25
1069580	3-38
1069681	3-23
1069687	3-23
1069688	3-23, 3-25
1070124	3-38
1070324	3-38
1071053	2-61
1071132	3-38
1071716	2-141, 2-143
1071717	2-141, 2-143
1071857	2-173
1071860	2-173
1072046	3-25
1072047	3-25
1072054	3-31
1072224	2-39
1072476	2-77
1072531	2-125, 2-129, 2-133
1072632	2-139
1072633	2-125, 2-129, 2-133
1072815	2-17
1073641	2-17
10832	2-141, 2-143
10844	5-17, 6-17
10845	5-17, 6-17
10851	5-31, 6-29
10852	5-31, 6-29
10895	5-3
11635	1-1, 2-81
1201894	2-17
12267	2-105, 2-113, 2-115
12277	2-117
12895	5-15
12916	6-7
13015	2-49
13248	2-77, 2-99, 2-101, 2-103, 2-145, 2-147, 3-3, 3-7
13773	2-117
13865	2-111, 3-11
13904	4-7, 4-9, 4-26
13907	4-7, 4-9, 4-17, 4-19, 4-21
140916	3-38
140962	2-17, 2-57
14242	2-69, 2-71
14432	2-47
14605	2-75
150709	3-29
15331	2-75
15555-2	2-45
15675	2-87, 2-91
16082	2-107, 2-109, 3-11
16213	2-77, 2-79
16376	2-39
16391	2-103
16411	1-1
16412	1-1
16455	2-93, 2-95
16695	4-2, 4-3
16735	2-15, 2-21, 2-25, 2-29, 2-39, 2-101, 2-141, 3-23
16930	2-7, 2-53, 2-85, 2-97
16931	2-101, 2-103, 2-117, 3-15, 3-17, 3-31
17414	2-45
19064	2-21
19065	2-7, 2-73, 2-89, 2-91
19066	2-15, 2-21, 2-31, 2-33, 2-43, 2-91, 2-93, 2-95, 2-105, 2-113, 3-3, 3-5, 3-7, 3-9, 3-15, 3-17, 3-31, 3-38
19207	2-175
19252	2-39
19580	2-79
19583	2-61, 2-63
19676	2-57
20432	5-21, 6-19
20433	5-21, 6-19
20634	2-103
20719	5-23
21119	2-123, 2-127, 2-131
21168	2-13, 2-15, 2-89, 2-93, 2-95
21198	2-77, 2-141
21246	2-7
21933	4-5
21934	4-5
21935	4-5
222158	2-85, 2-93, 2-95, 2-135
222159	2-85, 2-87, 3-29
222196	2-107, 2-111, 3-11
222236	2-77
222290	2-31, 2-33, 2-173
222460	2-69, 2-71, 2-105, 2-113, 2-115
222497	2-51, 2-53
22290	2-37, 2-111, 3-11
223350	2-13, 2-15
223609	2-105
22654	4-2, 4-3
24012	2-51, 2-53
24265	2-83
24339	2-61, 2-63, 2-71
24899	2-117
24976	2-39
25014	2-51, 2-53, 3-27
25122	2-135
25312	3-39
25537	2-17
25643	1-1

Part Number	Page Number
25887	2-117
26395-2	2-7
26663	2-73
27767	3-29
28296	2-99
29558	2-105, 2-111, 3-11
30013	2-21, 2-101
30121	5-17
30122	5-17
30125	5-10, 6-10
30131	5-23, 6-20
30132	5-23
30136	5-28, 6-26
30251	2-117
30252	2-117
30253	2-117
30255	2-117
30407	2-39, 3-11
31249	2-73
31354	4-2, 4-3
313552	3-11
31373	4-3
31375	4-2
31380	4-3
31381	4-2
31385	4-3
314421	3-15
314427	3-15
314428	3-15
314432	3-15
31525	2-49, 3-31
31568	2-131
31613	1-1, 2-135
31701	2-65
31922	3-7, 3-9
32126	2-61
32183	2-45
32483	2-37, 2-77, 2-79, 2-87, 3-3, 3-5, 3-7, 3-9
32485	2-31, 2-33, 2-69, 2-103, 2-105, 2-107, 2-117, 2-141, 2-143
32486	2-37, 2-65, 2-69, 2-71, 2-75, 2-105, 2-107
32490	1-1, 2-45, 2-57, 2-85, 2-87, 3-15, 3-17, 3-29
32491	1-1, 2-7, 2-9, 2-11, 2-15, 2-17, 2-21, 2-25, 2-27, 2-39, 2-47, 2-51, 2-53, 2-57, 2-59, 2-61, 2-63, 2-77, 2-81, 2-83, 2-85, 2-87, 2-89, 2-91, 2-101, 2-111, 2-115, 2-149, 3-11, 3-15, 3-17, 3-23, 3-31
32492	2-9, 2-11, 2-39, 2-49, 2-51, 2-53, 2-57, 2-59, 2-75, 2-85, 2-87, 2-101, 2-107, 2-109, 2-111, 2-115, 3-11, 3-19, 3-21, 3-27, 3-38
32493	2-7, 2-53, 2-95, 2-97
32522	2-69
32598	2-69, 2-71, 2-93, 2-95
32716	2-105, 2-113, 2-115
32960	2-57, 2-59
32982	2-135
32983	2-17
32984	2-49
32987	2-61, 2-63, 2-117
33580	4-13, 4-15
33807	2-113
33928	2-73
33932	2-73
33948	2-99
34159	4-23
34176	4-2
34178	4-13, 4-15
34357	2-137, 2-139, 2-145, 2-147
34392	2-131
34738	2-57
34816	2-31
34821	2-49
34823	2-49
34877	2-39
35529	2-93, 2-95
35707	2-49
35886	2-63
35973	2-117
360369	2-17
360370	2-17
360460	2-105
360801	2-105
360943	2-81, 2-91
360973	2-21, 3-38
361023	2-135
361075	2-31, 2-33
361339	2-87, 2-103
361366	5-4, 6-4
361368	5-23
361372	6-5
361373	5-23, 6-20
361374	5-10, 6-7, 6-10
361375	6-26
361389	6-7
361392	5-12, 6-12
361395	6-17
361401	6-7
361427	5-11
361428	5-4, 6-4
361430	5-30, 6-28
361436	5-3, 6-3
361440	5-8, 5-31, 6-8
361589	6-12
363087	2-113, 2-115
36328	2-65, 2-93, 2-95, 2-117, 2-143
363976	2-73
364779	2-45
364805	2-51, 2-53
365009	2-123, 2-127, 2-131
365066	2-45
36643	2-49
36661	2-103
367113	2-131
367403	2-105
367404	2-93, 2-95
367679	2-81, 2-83
367718	3-17
367950	3-15
367974	3-15, 3-17
368090	5-31, 6-29
368091	5-31, 6-29
368197	2-115
369481	2-65
369704	2-7
369746	1-1, 2-47
369747	2-47
369781	2-69, 2-71, 2-105
370008	2-5
370009	2-5
370181	2-9, 2-11, 2-66, 2-71
371017	6-9
372900	5-10
372901	5-10, 6-10
372904	5-10, 6-10
372905	5-11, 6-11
372906	6-5
372907	6-5
372912	5-10, 6-10
372913	5-10, 6-10
372917	5-23, 6-20, 6-21
372918	5-10
372920	5-3
372921	5-5
372927	5-10
372928	5-10, 6-10
373217	4-13
373218	4-21
373226	4-13, 4-15
373236	4-13, 4-15
373291	4-13, 4-15
373297	4-13, 4-15
373298	4-13, 4-15
373299	4-13, 4-15
373317	4-17, 4-19
373327	4-17, 4-19
373336	4-17, 4-19
373337	4-17, 4-19
373346	4-17, 4-19
373374	4-23
373375	4-23

Part Number	Page Number
373389	4-17, 4-19
373391	4-17, 4-19
373393	4-17, 4-19
373394	4-17, 4-19
373395	4-17, 4-19
373396	4-17, 4-19
373398	4-17, 4-19
373402	4-17, 4-19
373406	4-23
373407	4-21
373408	4-21
373409	4-21
373410	4-21
373412	4-23
373413	4-17, 4-19, 4-23
373414	4-21
373415	4-21
373429	4-17, 4-19
373430	4-17, 4-19
373431	4-19
373434	4-17, 4-19
373435	4-15
373436	4-15
373437	4-15
373438	4-15
373493	4-17, 4-19
373543	4-15
373545	4-13, 4-15
373619	2-35, 2-37
373637	4-7, 4-9
373639	4-7, 4-9
373640	4-7, 4-9
373642	4-7, 4-9
373646	4-7, 4-9, 4-26
373647	4-7, 4-9
373655	4-26
373656	4-7, 4-9
373657	4-7, 4-9
373658	4-7, 4-9
373663	4-7, 4-9
373665	4-7, 4-9
373678	4-17, 4-23
373684	4-7, 4-9
373685	4-7, 4-9
373690	4-7, 4-9
373691	4-7, 4-9
373692	4-7, 4-9
373693	4-9
373694	4-7, 4-9
373695	4-13
373696	4-13
373697	4-13
373698	2-61
373699	4-17, 4-19
373700	4-17, 4-19
373701	4-17, 4-19
373702	2-93, 2-95
373703	4-23
373704	2-35, 2-37
373705	4-26
373706	4-26
373707	2-141, 2-143
373708	2-141, 2-143
373711	2-101
373712	2-101
373720	4-21, 4-23
374000	2-175
374224	2-175
374560	2-61
374563	2-61
37460	4-21
37462	4-21
374710	2-69
37555	4-2, 4-3
377084	2-31, 2-33
377165	2-7
377235	2-123, 2-127, 2-131
377249	2-117
377537	1-1
377538	1-1
377540	1-1
379607	2-107, 2-109, 3-11, 4-3
379608	2-117, 4-2
379656	2-43
379684	2-113
379686	2-113
379829	2-87
380521	2-39
380559	2-43
381391	2-57, 2-59
381857	2-123, 2-127, 2-131
381865	2-123, 2-127, 2-131
383139	2-117
383142	2-117
383143	2-117
383160	1-1
383161	2-7
383194	2-115
383202	2-175
383203	2-117, 2-175
383205	2-113, 2-115
383255	2-65
384859	6-29
384871	6-9
384872	6-7, 6-11, 6-29
384874	6-10
388153	2-37
388500	6-21
38968	4-13, 4-15
39005	2-69, 2-99, 2-111, 3-11
39051	5-3, 6-3
39062	5-3, 6-3
39063	5-3, 5-5
39065	5-7, 5-25, 5-29, 5-31, 6-7, 6-23, 6-27
39073	5-4, 5-5, 6-4, 6-5
39087	5-3, 6-3
39088	5-3, 5-5, 6-3, 6-5
390880	2-99
39094	5-4, 6-4
39103	5-7
39105	5-3
39119	5-9
39121	5-7, 5-25, 5-29, 5-31, 6-7, 6-23, 6-27
39160	5-15, 5-28, 5-30, 6-23
39161	5-7
39197	5-15, 6-15
39239	2-31, 2-33
392611	2-49
39272	2-49
39277	2-25, 2-49, 2-57, 2-59, 2-63, 2-73, 2-101, 3-23
39278	2-51, 2-53, 2-105
39279	2-93, 2-95, 2-149
39283	2-39, 2-49, 2-65, 2-103, 3-19, 3-21
39284	2-39, 2-77
39285	2-39, 2-101, 2-103, 2-145, 2-147, 3-31
39309	2-35
39311	2-103, 2-105
39312	2-115
39313	2-65
393215	2-101
393244	2-49
393359	3-31
393370	3-31
393371	3-31
393400	6-17
393401	2-43
39349	2-39, 2-49, 2-57, 2-59, 2-61, 2-77, 2-101, 2-103, 2-105, 3-23
39350	2-57, 2-61, 2-63, 2-145, 2-147
393504	6-5
393566	6-20
393570	6-3
393588	6-8
393598	6-12
39394	2-107, 2-109, 3-11
39395	2-117
394922	2-31, 2-33
39507	6-20
39508	5-23
39527	4-2
39562	2-69
395973	2-145, 2-147
396213	2-123, 2-127, 2-131
396217	3-12
396234	2-123, 2-127
396810	2-149
397225	2-81, 2-83
397826	2-105

Part Number	Page Number
397889	2-31, 3-15, 3-17
39827	1-1
398279	2-47
398481	2-175
398501	2-31, 2-33
398508	2-31
398528	2-31
398806	2-23, 2-25, 2-27, 2-29
40166	5-23, 5-28, 6-20, 6-26, 6-27
40352	2-69
40407	5-29, 6-27
40409	5-11, 5-13, 6-11
40418	6-29
40607	2-101
40625	2-137, 2-139
40678	2-45
41139	2-49, 2-91
41140	2-39, 2-103, 3-31
41141	2-49
41142	2-7, 2-39, 2-103
41178	1-1, 2-81, 2-101
41186	2-49, 2-77, 2-117, 3-31
41187	2-9, 2-11
41342	2-49, 2-105
41359	2-75, 2-77, 2-79
41361	2-49
41430	2-7, 2-39, 2-49, 2-53, 2-57, 2-59, 2-71, 2-77, 2-87, 2-101, 2-105, 2-115, 3-17, 3-19, 3-21, 3-31
41517	2-65
41619	2-9, 2-11, 2-65
41792	5-4
41973	5-15, 5-29, 5-31, 6-13, 6-15, 6-27, 6-29
42011	2-49
42120-1	2-93, 2-95
42223	2-143
42260	2-149
43290	2-111, 2-115, 3-11
43555	3-31
43611	2-25, 2-81, 2-83, 2-89
43844	2-45, 2-55, 2-57, 2-59
44869	2-101, 2-117, 2-145, 2-147
44961	2-55, 2-107, 2-109
45181	2-73
45261	2-107, 2-111, 3-11
45622	4-13, 4-15
45623	4-13, 4-15
45628	4-2, 4-3
45780	2-7
45786	2-66, 2-71
46480	2-135, 2-149
46481	2-135
46482	2-135, 2-145, 2-147
46559	2-107, 2-109, 3-11
46563	2-73
47167	3-29
47501	2-107, 2-109, 3-11
47504	3-11
47508	2-107, 2-109, 2-141, 2-143, 3-12
47512	2-145, 2-147
47566	2-45
47585	2-37
47638	2-63, 2-93, 2-95, 2-135
47801	2-61, 2-63
48985	2-69
49034	3-19, 3-21, 3-23
49177	2-17
49263	2-57, 2-89
49266	2-45, 2-57, 2-59, 3-3, 3-5, 3-7, 3-9
49609	2-35
49697	2-91
49800	2-17, 2-19, 2-21, 2-89, 2-91
51109	2-73
51225	2-107, 2-111, 3-11
51331	5-5
51332	2-51, 2-53, 5-11, 6-11
51338	2-61, 2-63, 2-69, 2-71
51339	2-61, 2-63, 2-69, 2-71
51534	2-111, 3-11
51538	2-75, 2-107, 2-111, 3-11
51560-5	2-47
51564	2-117
51715	2-117
51813	2-105
52142	2-137, 2-139
52296	3-17
52402	2-35, 2-37, 2-149
52405	4-13, 4-15
52911	2-143
52929	2-135
53029	2-45
53076	2-135
53466	2-99
53468	2-85, 2-107, 2-109, 3-11
53816	2-66
53817	1-1, 2-66
53818	2-66
53819	2-66
53819-2	2-66
54051	2-61, 2-63
54052	2-61, 2-63
54086	2-63
54087	2-61, 2-63
54182	2-7
54184	2-7
54190	1-1, 2-7
54204	2-117
54274	2-57, 2-59, 2-101, 2-145, 2-147
54333	2-45
54390	2-69, 2-71
54400	2-69, 2-105
54577	2-69
54878	2-117
54911-16	2-39
54911-32	2-55
54922	2-5
54923	2-5
54925	2-5
54927	2-5
54995	2-105, 2-113
55034	2-89
55586	2-35, 2-37, 2-57, 2-59, 2-115, 2-149
55685	2-61, 2-145, 2-147
55779	2-117
55837	2-39
55845	3-31
55847	5-8, 6-8
55849	1-1, 2-39
55926	4-17, 4-19
56185	2-35, 2-37
56186	2-31, 2-33, 2-43
56228	2-117
56690	2-35, 2-37, 2-145, 2-147, 2-149
56692	2-57, 2-59, 2-141, 2-143
56820	2-61, 2-63
56827	2-141
57315	2-61
57773	2-39
57824	2-117
57988	3-12
58056	2-63
58078	2-69
58228	2-39
58286	2-39, 2-49
58494	2-19, 2-23
58592	2-135
58842	2-61
59009	2-73
59015	2-45
59192	2-9, 2-11
59194	2-11
59195	2-9
59440	2-5
59537	2-9
59538	2-11
59542	2-93, 2-95

Part Number	Page Number
59577	2-35, 2-37
59634	2-111, 3-11
59649	2-77
59658	2-105
59767	2-175
59899	2-105
60751	3-7, 3-9
610943	3-15, 3-17
611140	3-25
61882	4-21
61886	4-23
626081	2-81, 2-83
630448	2-85, 2-87
63234	2-103
63378	2-17
63511	2-135
63810	2-39, 3-29
63926	2-93, 2-95
64173	2-105
64425	2-105
64489	2-77
64886	2-61
65145-1	2-141, 2-143
65206	2-123, 2-127
65232	4-3
66018	2-5
66019	2-5
66187	5-4, 6-4
66188	2-175
66194	5-5, 6-5
66204	5-17, 6-17
66205	5-8
66207	5-17, 6-17
66211	2-69
66213	2-69
67665	2-71
67811	2-141, 2-143
68441	3-12
68872	2-49
69461	2-17
69904	2-7
69915	2-7
69972	2-93, 2-95
70096	4-17, 4-19
70100	4-17, 4-19
70157	2-61, 2-85, 2-87, 2-107, 2-109, 2-149
70158	2-69
70161	2-69
70165	2-43, 5-28, 6-23
70173	2-45
70188	5-28, 6-23
70189	5-7
70196	5-21, 6-19
70197	5-21, 6-19
70198	5-21, 6-19
70199	5-21, 6-19
70200	5-21, 6-19
70201	5-21, 6-19
70202	5-21, 6-19
70203	5-21, 6-19
70204	5-21, 6-19
70205	5-21, 6-19
70206	5-21, 6-19
70207	5-21, 6-19
70208	5-21, 6-19
70209	5-21, 6-19
70210	5-21, 6-19
70211	5-21, 6-19
70212	5-21, 6-19
70213	5-21, 6-19
70280	2-66
70622	2-37
70623	2-37
70709	2-37
70717	2-37
70887	5-3, 6-3
70888	5-3, 6-3
70889	5-4, 6-4
70890	5-4
70891	5-4
70893	5-4
70895	5-5
70896	5-5
70897	5-5, 6-5
70899	5-5
70900	5-7, 6-7
70901	5-7, 6-7
70902	5-7, 6-7
70903	5-7, 6-7
70904	5-7, 6-7
70905	5-7, 6-7
70906	5-7, 6-7
70907	5-7, 6-7
70909	5-7
70910	5-7
70911	5-7, 6-7
70912	5-7, 6-7
70913	5-7, 5-10, 6-7, 6-10
70915	5-8
70916	5-8
70917	5-8
70919	5-8, 6-8
70920	5-8, 6-8
70921	5-9
70922	5-9
70923	5-9, 6-9
70924	5-9, 6-9
70925	5-9, 6-9
70926	5-9
70927	5-9
70928	5-9
70929	5-10, 6-10
70934	5-11, 6-11
70935	5-11, 6-11
70936	5-12, 6-12
70937	5-12, 6-12
70938	5-17
70939	5-17
70940	5-17
70941	5-17, 6-17
70942	5-17, 6-17
70943	5-17, 6-17
70944	5-17
70945	5-17, 6-17
70946	5-17, 6-17
70947	5-17, 6-17
70948	5-17, 6-9
70949	5-17
70950	5-17
70951	5-17
70952	5-17
70953	5-17
70954	5-17, 6-17
70955	5-17, 6-17
70956	5-19, 6-18
70957	5-19
70964	5-23
70965	5-23, 6-20
70966	5-23, 6-20
70967	5-23, 6-20
70968	5-23, 6-20
70972	5-25, 6-23
70973	5-25, 6-23
70974	5-25, 6-23
70975	5-13
70976	5-13
70977	5-13, 6-13
70978	5-13, 6-13
70979	5-13
70980	5-28
70982	5-29, 6-27
70983	5-29, 6-27
70984	5-29, 6-27
70985	5-30
70986	5-30
70987	5-30
70988	5-30
70989	5-30, 6-28
70991	5-30, 6-28
70992	5-30, 6-28
70994	5-31, 6-29
70998	5-3, 6-3
70999	6-3
71373	2-69
71385	2-43
71388	2-43
71539	2-43
71579	2-7
71985	5-3, 6-3
71986	5-3, 6-3
71987	5-3, 6-3
71988	5-3, 6-3
71989	5-3
71990	5-3, 6-3
71991	5-3, 6-3
71992	5-3, 6-3
71993	5-3, 6-3
71995	5-4, 5-13, 6-28
71996	5-5, 6-5

Part Number	Page Number
71997	5-5, 6-5
71999	5-5
72010	5-5, 6-5
72011	5-7
72012	5-7
72013	5-7, 6-7
72014	5-7, 6-7
72015	5-7, 6-7
72016	5-7, 6-7
72017	5-7
72018	5-7, 5-29
72019	6-7
72381	2-175
72489	2-45
72926	2-61, 2-65
72968	2-7, 2-59, 2-83
72970	2-37, 2-43
72977	2-49
72993	5-7, 6-7
72994	5-7, 5-11, 6-7
72995	5-7, 5-31
72996	5-8, 5-11, 5-31
72997	5-8
72998	5-9, 6-9
72999	5-9
73109	2-135
73281	2-61
73411	2-77, 2-79
73471	2-55
73479	5-9, 6-9
73481	5-11, 6-11
73482	6-10
73483	5-10, 6-10
73484	5-10, 6-10
73487	5-11, 6-11
73488	5-11, 6-11
73489	6-11
73491	5-12, 6-12
73492	5-12, 6-12
73493	5-12, 6-12
73494	5-12, 6-12
73495	5-12
73496	5-12
73497	5-12, 6-12
73498	5-12, 6-12
73499	5-12, 6-12
73500	5-12, 6-12
73501	5-12
73502	5-12, 6-12
73503	5-12
73504	5-12, 6-12
73505	5-12
73506	5-12, 6-12
73507	5-12, 6-12
73508	5-12, 6-12
73509	5-15, 6-15
73510	5-15
73511	5-15, 6-15
73512	5-15, 6-15
73513	5-15, 6-15
73514	5-15, 6-15
73515	5-15, 6-15
73516	5-15, 6-15
73517	5-15, 6-15
73518	5-15, 6-15
73519	5-15, 6-15
73520	5-17, 6-17
73521	5-17, 6-17
73522	5-17, 6-17
73523	5-17, 6-17
73524	5-17, 6-17
73525	5-17, 6-17
73526	5-17, 6-17
73527	5-17, 6-17
73528	5-17, 6-17
73529	5-17, 6-17
73530	5-17, 6-17
73532	5-17, 6-17
73533	5-19, 6-18
73534	5-19
73535	5-19
73545	5-21, 6-19
73547	5-21, 6-19
73551	5-21, 6-19
73554	5-23, 6-20
73555	5-23, 6-20
73560	5-23, 6-20
73561	5-25, 6-23
73562	5-25, 6-23
73563	5-25, 6-23
73565	5-25, 6-23
73567	5-27, 6-25
73568	5-27, 6-25
73569	5-27, 6-25
73570	5-27, 6-25
73571	5-27, 6-25
73572	5-27, 6-25
73573	5-27, 6-25
73574	5-27, 6-25
73575	5-27, 6-25
73576	5-27, 6-25
73577	5-27, 6-25
73578	5-27, 6-25
73579	5-27, 6-25
73580	5-27, 6-25
73581	5-27, 6-25
73582	5-27, 6-25
73585	5-27, 6-25
73586	5-27, 6-25
73588	5-27, 6-23, 6-25
73589	5-27, 6-23, 6-25
73590	5-27, 6-23, 6-25
73592	5-13
73593	5-13, 6-13
73594	5-13, 6-13
73595	5-13
73596	5-13, 6-13
73597	5-13, 6-13
73598	5-13, 6-13
73599	5-13, 6-13
73600	5-13, 6-13
73601	5-13, 6-13
73602	5-13, 6-13
73603	5-13, 6-13
73604	5-13, 6-13
73605	5-28
73606	5-28, 6-26
73607	5-28
73610	5-28, 6-26
73618	5-29
73619	5-29, 6-27
73620	5-29
73621	5-29, 6-27
73622	5-29, 6-27
73623	5-29, 6-27
73624	5-29, 6-27
73625	5-29, 6-27
73626	5-29, 6-27
73627	5-30
73628	5-30
73629	5-30
73630	5-30
73631	5-30, 6-28
73632	5-31, 6-29
73633	5-31, 6-29
73634	5-31, 6-29
73636	5-31
73737	2-49
74027	3-27
74040	2-23
74094	4-2, 4-3
74095	4-2
74098	4-2, 4-7, 4-9
74099	4-2
74100	4-2, 4-3
74101	4-3
74122	4-13, 4-15
74123	4-13, 4-15
74125	4-13
74165	4-13, 4-15
74166	4-13, 4-15
74167	4-13, 4-15
74168	4-13, 4-15
74174	4-2
74180	4-17, 4-19
74183	4-5
74184	4-21
74185	4-5
74193	4-5
74196	4-5
74210	4-21
74222	4-5
74223	4-21
74225	4-17, 4-19
74226	4-17, 4-19
74232	4-5
74237	4-17, 4-19
74240	4-21
74243	4-5
74244	4-5

Part Number	Page Number
74245	4-5
74249	4-13, 4-15
74250	4-2, 4-3
74254	4-21
74256	4-21
74257	4-21
74258	4-21
74259	4-17, 4-19, 4-23
74262	4-21
74265	4-21
74266	4-21
74267	4-21
74271	4-23
74272	4-21
74273	4-21, 4-25
74274	4-23
74275	4-23
74276	4-21
74277	4-23
74278	4-23
74280	4-21
74281	4-21
74282	4-23
74405	2-39, 5-21, 6-19
75575	2-85, 2-87
75934	2-77, 2-79
75968	2-37
762156	2-135
762179	2-107, 2-109
762180	2-55
762425	2-93, 2-95, 2-135
762426	2-61, 2-145, 2-147
762427	2-63, 2-85, 2-87, 2-111, 2-115, 2-149, 3-11
762428	2-37, 2-59, 2-115, 2-149
762432	2-61, 2-63
762433	2-37, 2-145, 2-147, 2-149
762437	2-145, 2-147
762438	2-37, 2-149
762439	2-107, 2-109, 2-141, 2-143, 3-11
762445	2-101, 2-117, 2-145, 2-147
762456	2-59, 2-141, 2-143
762463	2-135
762466	2-141
762468	2-61, 2-143
762469	2-135, 2-141
762481	2-135
762484	2-135
762492	2-135, 2-139
762516	2-173
763042	2-105
763045	3-15, 3-17, 3-38
76426	3-23
76570	2-9, 2-11, 2-39, 2-57, 2-75, 2-77, 2-103, 2-105, 2-111, 3-11
767407	2-143
767410	2-145, 2-147
767422	3-11
767430	2-145, 2-147
76888	3-15
769077	2-145, 2-147
76956	2-49
76957	3-31
77002	2-45
77003	4-7, 4-9
77005	4-7, 4-9, 4-26
77006	4-7, 4-9
77097	2-85, 2-87, 2-111, 2-115, 2-149, 3-11
771090	2-37
77214	2-39
77306	2-131
77308	2-131
77345	2-61
77473	2-123, 2-127
79380	3-15, 3-17
79381	2-55
79399	2-40
79742	4-21
79747	4-21
79748	4-23
79749	4-23
79750	4-23
79751	4-23
79752	4-23
79753	4-23
79754	4-25
79755	4-25
79756	4-25
79757	4-25
79758	4-25
79759	4-25
79760	4-25
79761	4-25
79762	4-25
79763	4-25
79764	4-25
79765	4-25
79766	4-25
79767	4-25
79776	4-25
79779	4-21
79828	4-13, 4-15
79868	2-149
80061	3-23
80395	2-107, 2-111, 3-11
80491	2-81, 2-83
81710	3-31
82200	3-3, 3-5
82733	2-81, 2-83
82739	2-101
82829	2-91
82839	2-75
83159	3-7, 3-9
84170	2-77, 2-79
84581	2-107, 2-109, 3-11
84631	5-5
84635	5-25, 5-27, 6-23, 6-25
84636	5-13, 6-13
84638	5-23, 6-20
84644	5-25, 6-23
84647	5-3
84648	5-27, 6-25
84649	5-27, 6-25
84650	5-27, 6-25
84651	5-27, 6-23, 6-25
84660	3-40
86240	2-69, 2-113, 2-115
86799	2-13, 2-15
86866	2-75, 2-89
86877	2-175
86953	2-105
87172	3-36, 3-37
87316	2-17
87631	2-117
87672	2-123, 2-127, 2-131
87738	2-57, 2-59
87816	2-73
9000227	2-131
9000351	2-123, 2-127
9000355	2-45
9000845	3-7, 3-9
9000846	3-3, 3-5
9000879	3-3, 3-5, 3-7, 3-9
9001101	6-21
9003635	3-19
9003805	3-7
9003865	3-3
9003868	5-8, 6-8
9003869	5-8, 6-8
9003870	5-8, 6-8
9003888	6-4
9003891	6-18
9003933	3-39
9004070	3-11
9004077	1-1, 2-81
9004078	1-1, 2-85, 2-87
9004086	3-40
9004087	3-40
9004088	3-40
9004089	3-40
9004090	3-40
9004091	3-40
9004100	3-40
9004107	3-36
9004283	6-28
9004325	2-33
9004335	6-3
9004337	6-3
9004338	6-4

Part Number	Page Number
9004339	6-4
9004340	6-5
9004341	6-5
9004346	6-7
9004347	6-7
9004348	6-4
9004349	6-9
9004350	6-9
9004358	6-15
9004361	6-17
9004363	6-17
9004368	6-13
9004369	6-13
9004371	6-13
9004372	6-13
9004373	6-13
9004374	6-26
9004375	6-26
9004376	6-23
9004379	6-28
9004381	6-28
9004382	6-28
9004385	6-27
9004386	6-27
9004389	6-20
9004390	6-20
9004393	6-20
9004395	6-21
9004396	6-21
9004397	6-21
9004398	6-21
9004399	6-21
9004400	6-21
9004402	6-8
9004403	6-8
9004404	6-8
9004405	6-8
9004406	6-8, 6-11
9004407	6-8
9004409	6-12
9004410	6-12
9004431	6-3
9004432	6-7
9004433	6-10
9004435	6-4
9004436	6-9
9004437	6-9
9004438	6-9
9004439	6-9
9004440	6-15
9004441	6-17
9004442	6-18
9004443	6-18
9004444	6-18
9004445	6-13
9004446	6-26
9004447	6-26
9004448	6-28
9004449	6-27
9004450	6-20
9004451	6-20
9004454	6-23
9004513	2-33
9004517	2-51, 2-53
9004518	2-135
9004519	2-93, 2-95
9004522	2-49
9004523	2-49
9004526	2-17, 3-33
9004527	2-93, 2-95
9004528	2-31, 2-33
9004529	2-31
9004545	1-1, 2-31, 2-33
9004574	2-75
9004575	2-75
9004590	4-11
9004591	4-11
9004592	4-11
9004593	4-11
9004594	4-11
9004595	4-11
9004596	4-11
9004597	4-11
9004598	4-11
9004599	4-11
9004600	4-11
9004601	4-11
9004602	4-11
9004603	4-11
9004644	1-1
9004645	3-40
9004646	3-40
9004647	3-40
9004648	3-40
9004649	3-40
9004650	3-40
9004651	3-40
9004652	3-40
9004653	3-40
9004654	3-40
9004655	3-40
9004656	3-40
9004657	3-40
9004658	3-40
9004659	3-40
9004660	3-40
9004661	3-40
9004662	3-40
9004663	3-40
9004664	3-40
9004665	3-40
9004666	3-40
9004727	3-40
9004728	3-40
9004775	6-28
9004815	2-81, 2-83
9004865	2-71
9004867	2-71
9004868	2-71
9004869	2-71
9004870	2-71
9004871	2-71
9004873	2-71
9004940	1-1, 2-7, 2-9, 2-11
9005082	2-17
9005789	2-40
9006001	5-4
9006789	2-63
9006886	2-57
9007131	3-3, 3-5, 3-7, 3-9
9007181	3-5
9007972	2-91
9007973	2-29
9007974	2-21
9007975	2-21
9007976	2-25
9007977	2-15
9007978	2-15
9007979	2-15
9008178	3-40
9008195	3-37
9008198	3-9
9008199	3-5
9008200	3-21
9008228	2-51, 2-53
9008230	2-51, 2-53
9008624	2-101
9008697	2-61, 2-123, 2-127, 2-141
9008919	2-103
9009218	3-23
9009219	3-23
9009220	3-27
9009247	2-101
9010085	3-38
9010086	3-38
9011154	2-125, 2-129, 2-133, 2-145, 2-147
99321	1-2
99997	2-66

PART DESCRIPTION TO PAGE NUMBER CROSS REFERENCE LIST

A

Actuator, Govnr, Dsl, 2-43
Actuator, Valve En, 4-23
Actuator, Valve, Bypass, 4-17, 4-19
Adapter, Actuator, Govnr, Eng, Dsl, 2-43
Adapter, Hsng, Flywheel [1505, Kubo], 2-39
Adaptor Assy, Pump, Hyd, 4-17, 4-19
Adjuster Kit, Manual, W/ Pivot, 2-71
Alarm Assy, Backup, 12-24vdc 82-107dba, 3-3, 3-5, 3-7, 3-9
Alternator, 12vdc, 075a [Valeo], 2-49
Angle, 2-111, 3-11
Angle Wldt, Bmpr, Tower, Lh, 3-36, 3-37
Angle Wldt, Bmpr, Tower, Rh, 3-36, 3-37
Angle, Guide, 2-19, 2-89
Angle, Keeper, Cable, 2-113
Angle, Mtg, Ground, 3-31
Angle, Mtg, Stl, .19 2.3 3.7 01.0l 3hole, 2-23
Angle, Sppt Wldt, Hinge, 2-19
Antenna, Telem, 110 In [Gprs], 3-38
Arm Wldt, Alternator, Dsl, 2-49
Arm Wldt, Brush, Main, Drive, Lh, 2-117
Arm Wldt, Brush, Side, 2-107, 2-111, 3-11
Arm Wldt, Lever, 2-105
Arm Wldt, Neutral, 2-77
Arm Wldt, Safety, 2-89
Arm, Brush, Main, W/ Label, 2-117
Arm, Brush, Side, 2-107
Arm, Control En, 4-21
Arm, Lift, Hppr, W/ Label, Replmt, 2-93, 2-95
Arm, Linkage, Side Brush, 2-111, 3-11
Arm, Rocker [Ku], 6-12
Arm, Safety, Hppr, W/ Label, Replmt, 2-93, 2-95
Arm, Wiper, Windshield, 3-23
Armature, Motor [Ku], 6-19
Armrest, Rh, 2-17
Assembly Apparatus, Idle, 5-28
Assembly Bolt, Adjusting, 5-28
Assembly Camshaft, 5-15
Assembly Case, Main Bearing, 5-9
Assembly Case, Main Bearing 1, 5-9
Assembly Case, Main Bearing 2, 5-9
Assembly Case, Main Bearing 3, 5-9
Assembly Cock, Drain, 5-3
Assembly Connecting Rod, 5-17
Assembly Lever, Fork, 5-30
Assembly Pipe, Over Flow, 5-23
Assembly Piston Ring, 5-17
Assembly Piston Ring 05, 5-17
Assembly Plate, Control, 5-29
Assembly Pump, Injection, 5-27
Assembly Pump, Injection (See Injection Pump Breakdown), 5-25
Assembly Pump, Water, 5-8
Assembly Rocker Arm, 5-12
Assembly Rotor, Oil Pump, 5-7
Assembly Seal, Mechanical, 5-8
Assembly Shaft, Governor, 5-13
Assembly Shaft, R-arm, 5-12
Assembly Tappet, 5-27
Assy Armature, 5-21
Assy Bolt, 5-21
Assy Holder, Brush, 5-21
Assy Starter, 5-21
Assy Switch, Magneto, 5-21
Assy Yoke, 5-21
Axle Wldt, Rear, 4 Wheel, 2-63

B

Backplate S/A En, 4-23
Ball, 5-7, 5-17, 5-21
Ball, Cshft [Ku], 6-17
Ball, Relief, Oil [Ku], 6-7
Band, Pipe, 5-23, 5-31
Bar, Flat, Ss 0.12 01.00 X 18.5l, 4/0.5h, 2-93
Bar, Flat, Stl 0.19, 01.50 X 04.1l, 2-61
Bar, Flat, Stl 0.38, 01.00 X 03.3l, 2-45
Bar, Flt, Stl 0.38, 01.50 X 03.0l, 1/.6h, 2-65
Battery, Wet, 12vdc 0600cca, 2-49
Bearing, 4-21, 4-23, 5-21, 6-19
Bearing [Ku], 6-8
Bearing Assy, Cup / Cone, 45mmb, 2-63
Bearing Kit [Cl], 4-5
Bearing, Ball, 5-8, 5-13, 5-30
Bearing, Ball [Ku], 6-13, 6-28
Bearing, Ball, 8mmb X 22mmd X 7mmw, 2-77
Bearing, Ball, 1.38b 2.83d 0.67w, 2-117
Bearing, Case [Ku], 6-9
Bearing, Cone, 1.38b 0.71w, 2-61, 2-63, 2-69, 2-71
Bearing, Cone, Pump, Hyd, 4-17, 4-19
Bearing, Cshft [Ku], 6-17
Bearing, Cshft, -.2mm [Ku], 6-17
Bearing, Cshft, Std [Ku], 6-9, 6-17
Bearing, Cup, 4-17, 4-19
Bearing, Cup, 2.56d 0.55w, 2-61, 2-63, 2-69, 2-71
Bearing, Flng, 0.75b 1.00d 0.75l, Bnz, 2-77
Bearing, Flng, 2hole, 0.50b, 2-37
Bearing, Flng, 2hole, 0.50b [Nyl], 2-37
Bearing, Flng, 2hole, 0.75b, 2-73
Bearing, Journal-1.25 I.D. X .75 Lg, 2-85, 2-87
Bearing, Rod, Connecting [-.2mm, Ku], 6-17
Bearing, Rod, Connecting [-.4mm, Ku], 6-17
Bearing, Rod, Connecting, Std [Ku], 6-17
Bearing, Self Align, 1.25b 2.00d, 2-93, 2-95
Bearing, Thrust [-.4mm, Ku], 6-17
Bearing, Thrust [Ku], 6-17
Bearing, Thrust, 0.66b 1.25d 0.06w, 2-113
Bearing, Thrust, Motor, Hyd, 4-2, 4-3
Bearing, Thrust, Pump, Hyd, 4-17, 4-19
Bearing, Thrust, Std [Ku], 6-17
Bearing, W/ Collar, 0.75b 1.85d 1.06w, 2-117
Bell Crank, 4-25
Belt Kit, W/ Installation Tool, 6-28
Belt, V, 37.3l [Ax], 1-1, 3-31
Belt, V, 42.0l [Hc41], 2-49
Belt, V, 42.5l [3v], 1-1
Bezel, Switch [3 Gang], 2-31, 2-33
Blade, Wiper, Windshield, 3-23
Block, Spacer, Hinge, 3-15
Blown, Fan, Motor, 4-11
Bolt, 5-4, 5-5, 5-7, 5-8, 5-9, 5-11, 5-13, 5-15, 5-17, 5-19, 5-21, 5-25, 5-28, 5-29, 5-30, 5-31, 6-7, 6-9, 6-11, 6-12, 6-19, 6-29
Bolt [Ku], 6-4, 6-8, 6-11, 6-18, 6-23, 6-27, 6-29
Bolt Kit, M10 X 1.50 X 16, Thin, 2-35
Bolt, Adjusting, 5-28
Bolt, Adjustment Assy [Ku], 6-26
Bolt, Bearing Case 1, 5-9
Bolt, Carriage, M8 X 1.25 X 30, 1-1, 2-81, 2-83
Bolt, Carriage, M8 X 1.25 X 40, 2-7
Bolt, Connecting Rod, 5-17
Bolt, Cylinder Head, 5-5
Bolt, Eye, M10 X 1.50 X 117mm, 08.00 Eye, 2-115
Bolt, Flng, 6-8
Bolt, Flywheel, 5-19
Bolt, Hex [Ku], 6-13, 6-15, 6-23, 6-27, 6-29
Bolt, Hold-Down, Battery 08.5l, 2-49
Bolt, Motor, Hyd, 4-13, 4-15
Bolt, Shld, .25d X 1.25, #10-24, 2-73
Bolt, Shld, .31d X 1.00, .25-20, 2-77, 2-79
Bolt, Shld, 1.37d X 5.13l,1.1-18 Drilled, 2-61
Bolt, U, .50-20 X 6.00, 4.13id, 2-65
Bolt. Bearing Case 2, 5-9
Boot, 90deg .50id 1.00id 2.50l, Red, 2-49, 3-29
Boot, Bellows, 3.1l 4.4w 2.8h 1hole, Neo, 2-37
Boot, Terminal, Battery, 02-01ga, Blk, 2-49
Box, Instrument, li, Trimmed, 2-31, 2-33
Box, Pre-Filter, Lower, Trimmed, 2-99
Box, Pre-Filter, Upper, 3 X 4, Trimmed, 2-99
Brace Wldt, 2-19
Brace Wldt, Sppt, 2-21
Brace Wldt, Sppt [Gm 2010], 2-19
Bracket Wldt, 2-105
Bracket Wldt, Brush, Side, 2-105
Bracket Wldt, Light, Flsh, 3-3, 3-7
Bracket Wldt, Linkage, Propel, 2-77

Bracket Wldt, Linkage, Propel [Mits], 2-77
Bracket Wldt, Mtg, Alternator, Dsl, 2-49
Bracket Wldt, Mtg, Bmpr, 3-36, 3-37
Bracket Wldt, Mtg, Compressor, 3-31
Bracket Wldt, Mtg, Cyl, 2-115
Bracket Wldt, Mtg, Motor (S30 and XP only), 2-59
Bracket Wldt, Mtg, Propel, 2-79
Bracket Wldt, Mtg, Radiator, 2-57, 2-59
Bracket Wldt, Mtg, Shakr, 2-103
Bracket Wldt, Radiator (S30 and XP only), 2-59
Bracket Wldt, Radiator (S30 X4 only), 2-59
Bracket Wldt, Reservoir, Hyd, 2-135
Bracket Wldt, Sppt, Cover, Rear, Rh, 2-21
Bracket Wldt, Sppt, Radiator, Rh, 2-59
Bracket Wldt, Steering, Tilt, 2-37
Bracket Wldt, Wand, 3-17
Bracket, Mtg, Cover, 3-23
Bracket, Alarm, Backup, 3-5, 3-9
Bracket, Angle, Hold-Down, Battery, 2-49
Bracket, Angle, Keeper, Cable, 2-69, 2-105
Bracket, Angle, Lintel, 2-25
Bracket, Angle, Mtg, Seat, 2-17
Bracket, Brush, Stop Adj, 2-115
Bracket, Coil, Mtg, 4-11
Bracket, Flap, Recirculation, 2-7
Bracket, Grill, 2-19, 2-21
Bracket, Handle, Latch, 3-27
Bracket, Hinge, 3-17
Bracket, Latch, Cover, Top, 2-25
Bracket, Latch, Lh, 2-89, 2-91
Bracket, Latch, Rh, 2-89, 2-91
Bracket, Latch, Shrd, 2-21
Bracket, Latch, Shrd, Seat, 2-15
Bracket, Latch, Side, Door, 2-29
Bracket, Lift, 2-113
Bracket, Light, 3-5, 3-9
Bracket, Mtg, Air Deflector, 3-17
Bracket, Mtg, Air-Clnr, 2-19, 2-47
Bracket, Mtg, Cab, 3-23
Bracket, Mtg, Cntrl, Eng, 2-43
Bracket, Mtg, Condenser, 2-59
Bracket, Mtg, Cooling Shrd, 2-57
Bracket, Mtg, Eng [Kubota], 2-39
Bracket, Mtg, Eng, Rear [Kubota], 2-39
Bracket, Mtg, Fan Shrd, 2-57
Bracket, Mtg, Filter, 2-99
Bracket, Mtg, Filter, Rh, 2-99
Bracket, Mtg, Fltr, 2-101
Bracket, Mtg, Heat Shield, 2-51, 2-53
Bracket, Mtg, Isolator, 2-53
Bracket, Mtg, Lh, 2-117
Bracket, Mtg, Mirror, 3-19, 3-21, 3-23
Bracket, Mtg, Mirror, Lower, 3-23
Bracket, Mtg, Mirror, Upper, 3-23
Bracket, Mtg, Motor, Side Brush, 2-107, 2-109, 3-11
Bracket, Mtg, Rh, 2-117
Bracket, Mtg, Rocker Arm [Ku], 6-12
Bracket, Mtg, Switch, 2-93, 2-95
Bracket, Mtg, Tank, 2-57
Bracket, Mtg, Tank [Gm 2010], 2-57
Bracket, Mtg, Telem [S30], 3-38
Bracket, Mtg, Tube, 3-15, 3-17
Bracket, Mtg, Wand, 3-15, 3-17
Bracket, Prop, Rod, Cover, 2-25
Bracket, Retainer, Dust Seal, 2-99
Bracket, Retainer, Safety, 2-77, 2-79
Bracket, Retainer, Seal, 2-9, 2-11
Bracket, Rocker Arm, 5-12
Bracket, Seal, Chute, 2-85, 2-87
Bracket, Seal, Lh, 2-81, 2-83
Bracket, Seal, Rh, 2-81, 2-83
Bracket, Skirt, 2-9, 2-11
Bracket, Sppt, 3-31
Bracket, Sppt, Alternator, Dsl, 2-49
Bracket, Sppt, Cover, Rear, Lh, 2-21
Bracket, Sppt, Hppr Seal, 1-1, 2-81, 2-83
Bracket, Sppt, Hyd Tube, 2-141
Bracket, Sppt, Ohg, 3-19
Bracket, Sppt, Prop, Rod, 2-25
Bracket, Sppt, Radiator, 2-59
Bracket, Sppt, Rear, Shrd, 2-21
Bracket, Sppt, Shrd, Rear, Lower, Lh, 2-21
Bracket, Sppt, Shrd, Rear, Lower, Rh, 2-21
Bracket, Sppt, Shrd, Rear, Upper, Lh, 2-21
Bracket, Support, Hinge, 2-81
Bracket, Support, Tube, 2-63
Bracket, Switch, 2-113, 2-115
Bracket, Switch, Reverse, 3-3, 3-5, 3-7, 3-9
Bracket, U, .12, 1.2w 2.3 1.0l, 2/0.6h, 2-105
Bracket, U, .19, 2.8w 0.9 1.0l, 1/0.3h, 2-117
Brake Assy, Drum, Mech, 07.9d [6600]], 2-69
Brake Kit, Repair, 2-69
Brake Wldt, Parking, 2-73
Brake, Knot, Lh, 7.0d, 2-71
Brake, Knot, Rh, 7.0d, 2-71
Brush, Disk, Swp, 25.4 D, Flat Wire, 2-5
Brush, Disk, Swp, 26.0 D, Nylon, 2-5
Brush, Disk, Swp, 26.0 D, Polypropylene, 2-5
Brush, Swp, 45L, 5 Double Row Patrol, Nylon, 2-5
Brush, Swp, 45L, 8 Double Row, Nylon, 2-5
Brush, Swp, 45L, 8 Double Row, Polypropylene, 2-5
Brush, Swp, 45L, 8 Double Row, Polypropylene & Wire, 2-5
Brush, Swp, 45L, 8 Double Row, Wire, 2-5
Brush, Swp, 45L, 24 Single Row, Natural Fiber & Wire, 2-5
Brush, Swp, 45L, 24 Single Row, Nylon, 2-5
Brush, Swp, 45L, Sand Wedge, Polypropylene, 2-5
Brush, Swp, 45L, Window , Polypropylene, 2-5
Brushholder, 6-19
Bumper Kit, Corner, Ci, [S30], 3-36, 3-37
Bumper Wldt, Front, 2-93, 2-95
Bumper, Rbr, 2.5d X 1.00, 2-65
Bush, Governor Gear, 5-3
Bush, Idle Gear, 5-15
Bush, Piston Pin, 5-17
Bushing En, 4-21
Bushing En, 4-23
Bushing, Flng, 0.44b 1.25d 0.25l, 2-113, 2-115
Bushing, Gear, Gov [Ku], 6-3
Bushing, Gear, Idler [Ku], 6-15
Bushing, Pin, Piston [Ku]16241-21351, 6-17
Bushing, Sleeve, 0.31b 0.55d 0.38l, Oib, 2-75
Bushing, Sleeve, 0.37b 0.50d 0.50l, Oib, 2-73
Bushing, Sleeve, 0.50b 0.59d 0.38l, Stl, 2-105
Bushing, Sleeve, 0.50b 0.59d 0.62l, Fgl, 2-111, 3-11
Bushing, Sleeve, 1.00b 1.13d 0.99l, Fgl, 2-93, 2-95
Button, Cntrl, Horn, 2-35, 2-37

C

Cable, 06ga 13.0l Blk, 2-39
Cable, 06ga 16.0l Red .38ring /.38ring, 2-49
Cable, Battery, 02ga 33.0l Red .38ring, 2-49
Cable, Battery, 02ga 36.0l Blk .38ring, 2-49
Cable, Brake, 2-69
Cable, Glv .09d 013.0l .38eye /.38eye, 2-57
Cable, Glv .13d 010.0l .52eye /.52eye, 3-36, 3-37
Cable, Glv .13d 063.4l .50eye / M10, 2-105
Cable, Glv .19 24.5l .3 Eye / M10, 2-113
Cable, Glv .19d 009.88l .38eye / M10, 2-115
Cable, Push / Pull, 057.1l M6x1.0/M6x1.0, 2-79
Cable, Push / Pull, 062.5l M6x1.0/M6x1.0, 2-77
Cable, Push / Pull, 070.4l M6x1.0/M6x1.0, 2-75
Cam, 4-17, 4-19
Cam, Fuel, 5-13
Camplate S/A En, 4-21
Camshaft, 6-13
Camshaft, Fuel, 5-13
Cap, 5-28
Cap Screw En, 4-21
Cap, Breather, Hyd (CE Only), 2-135
Cap, Breather, Hyd, 2.4 Ds, 2-135
Cap, Enclosure, Hose, 3-15, 3-17
Cap, End, Motor, Hyd, 4-3

Cap, End, Valve, Steering, 4-5
Cap, Filler, Oil [Ku], 6-7, 6-10
Cap, Fuel, Tank, 2-45
Cap, Hub, Dust, 2.57d 0.77l, 2-69, 2-71
Cap, Radiator, 14psi [Stant Ao-2516], 2-57, 2-59
Cap, Screw, Idler [Ku], 6-26
Cap, Screw, Strg Valve, 4-2
Cap, Sealing, 5-3, 5-5, 6-5
Cap, Valve, 5-12
Cap, Valve [Ku], 6-12
Cap, Valve, Tire, Tubeless [Schrader], 2-66, 2-71
Cap, Vinyl, 3.28d 0.45l, 2-117
Case, Main, Brg Assy, 6-9
Channel, 2-13, 2-15
Channel, .12, 1.5w 0.5 44.6l, 3/0.4h, 2-7
Channel, Mtg, Fan Motor, 2-57
Channel, Mtg, Fan Motor (S30 X4 only), 2-59
Channel, Shield, Muffler, 2-51, 2-53
Charge Pmp Adap En, 4-23
Cir-clip, External, 5-12, 5-30
Cir-clip, Governor Shaft, 5-13
Cir-clip, Idle Gear, 5-15
Cir-clip, Piston Pin, 5-17
Clamp [Kubota], 5-8, 6-8
Clamp, Bridge, 5.0, 3-17
Clamp, Cable, Nyl, 0.62d, Nat, 3-38
Clamp, Cable, Ss, 2.50d X 1.00w, 1hole, 2-61, 2-85, 2-87, 2-107, 2-109, 2-149
Clamp, Cable, Stl, 0.38d X 0.38w, 1hole, 2-7
Clamp, Cable, Stl, 0.44d X 0.62w, 1hole, 2-45
Clamp, Cable, Stl, 0.63d X 0.75w, 1hole, 2-91
Clamp, Cable, Stl, 0.75d X 0.75w, 1hole, 2-141
Clamp, Cable, Stl, 0.9x1.8x0.62w, 1hole, 2-63
Clamp, Cable, Stl, 1.50d X 1.00w, 1hole, 2-99
Clamp, Cable, Stl, 1.75d X 1.00w, 1hole, 2-85, 2-107, 2-109, 3-11
Clamp, Hose, 5-10, 6-10
Clamp, Hose, Heater [Ku], 6-29
Clamp, Hose, Wormdrive, 0.25-0.62d, .31w, 2-45, 2-55, 2-57, 2-59
Clamp, Hose, Wormdrive, 0.31-0.88d, .31w, 2-45
Clamp, Hose, Wormdrive, 0.56-1.06d, .56w, 2-39, 3-29
Clamp, Hose, Wormdrive, 1.25-2.00d, .50w, 2-55
Clamp, Hose, Wormdrive, 1.81-2.75d, .50w, 2-47
Clamp, Hose, Wormdrive, 2.50-3.50d, .50w, 3-31
Clamp, Hose, Wormdrive, 3.75-4.62d, .62w, 3-15, 3-17
Clamp, Mtg, Fltr, Air, 2-47
Clamp, Muffler, 1.62d, 2-51, 2-53
Clamp, Pipe, 6-20
Clamp, Pipe 1, 5-23
Clamp, Pipe 2, 5-23
Clamp, Tube, 0.37d 0.50d, 2 Hole, 2-141, 2-143
Clamp, Tube, 0.50d 0.50d, 2 Hole, 2-141, 2-143
Clamp, Tube, 0.63d 0.63d, 2 Hole, 2-63
Clamp, Tube, Inj, Pipe #1 [Ku], 6-20
Clevis Wldt, Adj, .50pin 0.50-20, Pl, 2-69
Clevis, Adj, 0.38pin, 0.50-20thd, 2-69
Clevis, Adj, 0.38pin, M10x1.5, 2-105, 2-113, 2-115
Clevis, Adj, M6 Pin, M6 X 1.0 Rh, Pl, 2-75
Clip, .250h, Plstc [Pine-Tree], 2-13, 2-15, 2-89
Clip, Keeper, Blower Mtg, 4-11
Clip, Keeper, Open, 2-39, 3-11
Clip, Rod, Cab, 3-27
Clip, Spring, 2-71
Clip, Spring, Prop Arm, 2-93, 2-95
Clutch, 6-19
Clutch, Over Running, 5-21
Coil, Heater / Evaporator, 4-11
Collar 1, 5-30
Collar, Crank, Front [Ku], 6-17
Collar, Crankshaft, 5-17
Collar, Gear [Ku], 6-15
Collar, Govnr [Ku], 6-28
Collar, Idle Gear 1, 5-15
Collar, Idle Gear 2, 5-15
Collet, Valve Spring, 5-12
Column, Steering, 09.9l 0.86d 36tooth, 2-37
Column, Steering, Tilt, 2-35
Comp Idle Gear 1, 5-15
Comp. Case, Gear, 5-7
Comp. Crankshaft, 5-17
Comp. Flywheel, 5-19
Comp. Lever, Fork 1, 5-30
Comp. Lever, Governor, 5-29
Comp. Oil Pan (Rear Sump), 5-4
Comp. Weight, Governor, 5-13
Compressor, A/C [134, Tm-08hd], 3-31
Condenser, Ac, 3-31
Contact Kit, W/ Brush [En], 2-37
Control Box Assy Kit, Replmt, Telem[Can], 3-38
Control Box Assy Kit, Replmt, Telem[Usa], 3-38
Control, Fuel, 6-25
Control, Govnr [All Purpose], 2-43
Control, Manual, 4-25
Control, Manual (See Breakdowns), 4-21
Controls, Ac/Heater [S30], 3-25
Cooler, Hyd, 18gpm 400btu Of12 20x8x2, 2-137
Cord, Ele, Glowplug, 6-20
Cord, Glow Plug, 5-23
Cord, Sponge, 1-1, 2-85, 2-87
Coupler En, 4-23
Coupling, Drive, Flex, 09.5d /13tooth (S30 Only), 2-39
Coupling, Drive, Flex, 09.5d /15tooth (S30 X4 Only), 2-39
Cover, 4-11, 5-7, 5-21, 5-28, 6-7, 6-19
Cover Assy, Head, Cyl, 5-10
Cover Assy, Hppr, 2-89
Cover Assy, Rear, 2-19
Cover Wldt, Top, 2-23
Cover, Access, 4-11
Cover, Bearing Case, 5-9
Cover, Breather, 5-10, 6-10
Cover, Brg Case, Eng [Ku], 6-9
Cover, Cyl Head Assy [Ku], 6-10
Cover, Dsl, W/ Label, Replmt, 2-17, 3-33
Cover, End, 4-17, 4-19
Cover, Fork Lever Shaft, 5-30
Cover, Fuse, 3-25
Cover, Hole, Pump [Ku], 6-23
Cover, Hole, Pump, Fuel [Ku], 6-23
Cover, Hose, Plstc, Cab, 3-23
Cover, Hppr, Rotomold, Afmkt [S30], 2-91
Cover, Latch, 3-27
Cover, Lever, Gov [Ku], 6-28
Cover, Lntl, Lh, 2-13
Cover, Lntl, Lh, Rotomold, Afmkt [S30], 2-15
Cover, Lntl, Rh, 2-13
Cover, Lntl, Rh, Rotomold, Afmkt [S30], 2-15
Cover, Oil Pump, 5-7
Cover, Pump, Oil, 6-7
Cover, Rear, Lh, Rotomold, Afmkt [S30], 2-21
Cover, Rear, Rh, Rotomold, Afmkt [S30], 2-21
Cover, Seat, Rotomold, Afmkt [S30], 2-15
Cover, Seat, Trimmed, 2-15
Cover, Side, Lh, 2-27
Cover, Side, Rh, 2-13
Cover, Side, Rotomold, Afmkt [S30], 2-29
Cover, Solenoid [Ku], 6-23
Cover, Top, Rotomold, Afmkt [S30], 2-25
Cradle Sub Assy En, 4-21
Crankcase, Comp [Ku], 6-7
Crankcase, Complt, 5-3
Crankcase, Complt [Ku], 6-3
Crankshaft, 6-17
Crankshaft Assy, 6-15
Crankshaft, Metal [Ku], 6-9
Cylinder, Hyd, 1.5b 06.3l 01.50strk 2500, 2-111, 3-11
Cylinder, Hyd, 2.0b 08.0l 04.00strk 2500, 2-85, 2-87, 2-115
Cylinder, Hyd, 2.0b 15.0l 08.00strk 1500, 2-61
Cylinder, Hyd, 2.0b 16.8l 09.50strk 3000, 2-63
Cylinder, Hyd, 2.5b 28.6l 18.62strk 3000, 2-93, 2-95

D

Deflector, Air, 3-17
Diode, Ele, Plug, 2-31, 2-33, 2-173
Diode, Ele, Plug (CE Only), 2-173
Dipstick, Oil [Ku], 6-4
Disc, 0.06, 04.39d 01.67b, 4/.30h 3.8bc, 2-117
Disc, 0.08, 04.39d 02.56b, 4/.28h 3.8bc, 2-117
Door Assy, Hppr, Vac Wand, 3-15
Door Wldt, 2-81, 2-83
Door Wldt, Brush, Lh, 2-11
Door Wldt, Brush, Rh, 2-9
Door Wldt, Dust, 2-85, 2-87
Door Wldt, Hppr, 2-81, 2-83, 2-85, 2-87, 3-15
Door Wldt, Rh, 3-27
Door Wldt, Shakr, 2-103
Door Wldt, Vacuum, 3-15
Door, Access, 2-17, 2-57
Door, Vacuum, 3-15
Dowel Bushing En, 4-21
Dowel Pin, 4-25
Drive, Motor, Hyd, 4-2, 4-3, 4-13, 4-15
Driveshaft, Pump, Hyd, 4-17, 4-19
Drum Assy, Brake, 2-71
Dryer, A/C, 3-31
Duct Wldt, Chute, Dust, 34 Deg, 2-101
Duct, Outlet, Vacuum, 2-101
Duct, Vyl, 0.74 X 1.50 .75d Max 48.0l, 2-89

E

Ear, Lifting, Eng [Ku], 6-5
Element, Fltr, Air [Dn], 1-1, 2-47
Element, Fltr, Air, Safety, 1-1, 2-47
Element, Fltr, Fuel [Dn], 1-1, 2-45
Element, Fltr, Oil, Eng, Spin-On[Ku], 2-39
Element, Fltr, Oil, Spin-on [Ku], 1-1
End Cap, Motor, Hyd, 4-2
Engine Assy, Dsl, 25hp [Ku V1505 Tier4f] (See Engine Breakdown), 2-39
Engine Assy, Dsl, 37Hp, (See Engine Breakdown), 2-39
Extinguisher Kit, Fire, Ci [S30], 3-39
Extinguisher, Fire, 2.5 Lb Dry, 3-39
Eye, Joint [Ku], 6-23

F

Fan, Cooling, 14.1d, 6 Blade, 0.5b Taper, 2-57, 2-59
Fastener, Wire, Tie [Button Head], 2-31, 2-33
Fender, Lh, 6-21
Filter, 4-11
Filter Assy, Cyl, Dust, Replmt [S30], 2-103
Filter Assy, Fuel, Dsl, 2-45
Filter Assy, Hyd, 10mic, 1-1, 2-135
Filter, Air, 2.0 Inlet, Str, 2-47
Filter, Cyl, 11.09d, 13.31l, 6.6 Id, 1-1
Filter, Oil [Ku], 6-4
Fitting, Brs, Breather [02mp], 2-101
Fitting, Brs, E45, Pf02/Pm02, 2-39
Fitting, Brs, E90, Bm03/Pm02, 2-45
Fitting, Brs, E90, Bm10/Pm04, 3-29
Fitting, Brs, E90, Em05/Pm02, 2-45
Fitting, Brs, E90, Em05/Pm04, 2-45
Fitting, Brs, E90, If05/Pm04, 2-45
Fitting, Brs, Str, Bm03/Pm02, 2-101
Fitting, Brs, Str, Em10/Pm06, 3-29
Fitting, Brs, Str, Pf04/Pm06, 2-55
Fitting, Brs, Str, Pf06/Pm08, 3-29
Fitting, Brs, Str, Pm02, Service, 2-47
Fitting, Brs, Tee, Pf04/Pf04/Pm04, Run, 3-29
Fitting, Draincock [Ku], 6-3
Fitting, Draincock, .25npt, 2-55
Fitting, E90, Bm10/Pm08, 4-11
Fitting, Fltr, Oil [Ku], 6-7
Fitting, Fuel [Ku], 6-20
Fitting, Grease, Str Pm04 .47l, 2-93, 2-95
Fitting, Grease, Str Pm04 .63l, 2-61, 2-63
Fitting, Hyd, Cap, Jf06, 2-137, 2-139
Fitting, Hyd, E45, Ff04/Fm04, 3-11
Fitting, Hyd, E45, Ff12/Jm12, 2-143
Fitting, Hyd, E45, Fm04/Om06, 2-101
Fitting, Hyd, E45, Jf04/Jm04, 3-12
Fitting, Hyd, E45, Jf12/Jm12, 2-143
Fitting, Hyd, E45, Jm04/Om06, 2-101
Fitting, Hyd, E45, Jm10/Om12, 2-63
Fitting, Hyd, E90, Ff06/Fm06, 3-11
Fitting, Hyd, E90, Fm04/Om04, 2-85, 2-87, 2-111, 2-115, 2-149, 3-11
Fitting, Hyd, E90, Fm04/Om06, 2-63, 2-93, 2-95, 2-135
Fitting, Hyd, E90, Fm04/Om06 (S30 X4 Only), 2-135
Fitting, Hyd, E90, Fm06/Om06, 2-61, 2-63
Fitting, Hyd, E90, Fm06/Om08, 2-145, 2-147
Fitting, Hyd, E90, Fm08/Om08, Med, 2-117
Fitting, Hyd, E90, Fm10/Om08, 2-141
Fitting, Hyd, E90, Fm10/Om12, 2-135, 2-141
Fitting, Hyd, E90, Fm12/0m08, 2-141
Fitting, Hyd, E90, Fm12/Om12, 2-135, 2-139
Fitting, Hyd, E90, Fm12/Om16, 2-143
Fitting, Hyd, E90, Fm16/Om12, 2-139
Fitting, Hyd, E90, Fm20/Om20, 2-135
Fitting, Hyd, E90, Jf06/Jm06, 3-11
Fitting, Hyd, E90, Jm04/Om04, 2-85, 2-87, 2-111, 2-115, 2-149, 3-11
Fitting, Hyd, E90, Jm04/Om06, 2-63, 2-93, 2-95, 2-135
Fitting, Hyd, E90, Jm04/Om06 (S30 X4 Only), 2-135
Fitting, Hyd, E90, Jm06/Om06, 2-61, 2-63
Fitting, Hyd, E90, Jm06/Om08, 2-145, 2-147
Fitting, Hyd, E90, Jm08/Om08, Med, 2-117
Fitting, Hyd, E90, Jm10/Om08, 2-141
Fitting, Hyd, E90, Jm10/Om12, 2-135
Fitting, Hyd, E90, Jm12/0m08, 2-141
Fitting, Hyd, E90, Jm12/Om12, 2-135
Fitting, Hyd, E90, Jm12/Om16, 2-143
Fitting, Hyd, E90, Jm16/Om12, 2-137, 2-139
Fitting, Hyd, E90, Jm20/Om20, 2-135
Fitting, Hyd, Plug, Fm10, 2-135
Fitting, Hyd, Plug, Jm08, 2-39
Fitting, Hyd, Plug, Jm10, 2-135
Fitting, Hyd, Plug, Om04, 4-7, 4-9
Fitting, Hyd, Plug, Om06, 2-145, 2-147
Fitting, Hyd, Plug, Om06 (S30 and XP Only), 2-135
Fitting, Hyd, Plug, Om08, 4-7, 4-9
Fitting, Hyd, Plug, Pm02, 2-135
Fitting, Hyd, Rst, Fm04/Of04, .047, 2-93, 2-95
Fitting, Hyd, Rst, Jf04/Jm04, .047, 2-93, 2-95
Fitting, Hyd, Str, Ff16/Fm12, 2-139
Fitting, Hyd, Str, Fm04/Om04, 2-59, 2-115, 2-149
Fitting, Hyd, Str, Fm04/Om04 (S30 X4 Only), 2-37
Fitting, Hyd, Str, Fm04/Om06, 2-61, 2-145, 2-147
Fitting, Hyd, Str, Fm06/Om06, 2-37, 2-145, 2-147, 2-149
Fitting, Hyd, Str, Fm06/Om06, Long, 2-37
Fitting, Hyd, Str, Fm06/Om08, 2-149
Fitting, Hyd, Str, Fm06/Om08 (S30 X4 Only), 2-37
Fitting, Hyd, Str, Fm06/Om10, 2-107, 2-109, 2-141, 2-143, 3-11
Fitting, Hyd, Str, Fm08/Om08, 2-101, 2-117, 2-145, 2-147
Fitting, Hyd, Str, Fm08/Om08, Long, 2-145, 2-147
Fitting, Hyd, Str, Fm08/Om10, 2-59, 2-141, 2-143
Fitting, Hyd, Str, Fm10/Om10, 2-135
Fitting, Hyd, Str, Fm10/Om12, 2-61, 2-143
Fitting, Hyd, Str, Fm12/Om12, 2-149
Fitting, Hyd, Str, Fm16/Om12, 2-139, 2-145, 2-147
Fitting, Hyd, Str, Fm16/Om16, 2-135
Fitting, Hyd, Str, Fm20/Om16, 2-141, 2-143
Fitting, Hyd, Str, Jm04/Om04, 2-57, 2-59, 2-115, 2-149
Fitting, Hyd, Str, Jm04/Om04 (S30 X4 Only), 2-35, 2-37
Fitting, Hyd, Str, Jm04/Om06, 2-61, 2-145, 2-147
Fitting, Hyd, Str, Jm06/Om06, 2-37, 2-145, 2-147, 2-149
Fitting, Hyd, Str, Jm06/Om06 (S30 and S30 XP Only), 2-35

Fitting, Hyd, Str, Jm06/Om06, Long, 2-37
Fitting, Hyd, Str, Jm06/Om06, Long (S30 and S30 XP Only), 2-35
Fitting, Hyd, Str, Jm06/Om08, 2-149
Fitting, Hyd, Str, Jm06/Om08 (S30 X4 Only), 2-35, 2-37
Fitting, Hyd, Str, Jm06/Om10, 2-107, 2-109, 2-141, 2-143, 3-12
Fitting, Hyd, Str, Jm08/Om08, 2-101, 2-117, 2-145, 2-147
Fitting, Hyd, Str, Jm08/Om10, 2-57, 2-59, 2-141, 2-143
Fitting, Hyd, Str, Jm10/Om10, 2-135, 2-149
Fitting, Hyd, Str, Jm10/Om12, 2-143
Fitting, Hyd, Str, Jm12/Om12, 2-149
Fitting, Hyd, Str, Jm16/Om12, 2-137, 2-139, 2-145, 2-147
Fitting, Hyd, Str, Jm16/Om16, 2-135
Fitting, Hyd, Str, Jm20/Om16, 2-141, 2-143
Fitting, Hyd, Str, Metric, Om10/If05, 2-45
Fitting, Hyd, Str, Om04/Qm04, 2-145, 2-147
Fitting, Hyd, Str, Om06/Qm04, 2-145, 2-147
Fitting, Hyd, Str, Pf02/Pm04, 2-45
Fitting, Hyd, Str, Pm02/Pm02, 2-45
Fitting, Hyd, Tee, Ff04/Fm04/Fm04, Run, 3-11
Fitting, Hyd, Tee, Fm04/Fm04/Fm04,Bh Br, 2-133
Fitting, Hyd, Tee, Jf04/Jm04/Jm04, Run, 3-12
Fitting, Hyd, Tee, Jm04/Jm04/Jm04,Bh Br, 2-131
Fitting, Pipe, Plug [Ku], 6-3, 6-5, 6-7, 6-29
Fitting, Pipe, Plug, Pm04, Sq Head, 2-45
Fitting, Pipe, Water [Ku], 5-8, 6-8
Fitting, Plug [Ku], 6-3
Fitting, Plug, O-Ring, 4-17, 4-19
Fitting, Plug, O-Ring, #4, 4-2
Fitting, Plug, O-Ring, Motor, Hyd, 4-2
Fitting, Plug, Org, #6, Valve [Cec], 4-7, 4-9, 4-26
Flange Wldt, Fltr, 2-103
Flange, Brg, 1.9id 2h, 2-117
Flange, Brg, Mount, 2-37
Flange, Motor, Hyd, 4-2, 4-3
Flange, Pump, Water [Ku], 5-8, 6-8
Flange, Sleeve, 5-27
Flange, Sleeve [Ku], 6-25
Flange, Water [Ku], 5-31, 6-29
Flap Assy, Seal, Dust Chute, 2-101
Flap, Tire/Tube, 570/500-8, 2-66
Flap, Wand, Vacuum, 3-15
Flasher, 12-80vdc, 2a, 3-3, 3-5, 3-7, 3-9
Flasher, Hd, 12vdc 25a [10-57300], 3-7, 3-9
Flywheel, 6-18
Follower, Piston, 4-21
Follower, Screw, Pump, Injection[Ku], 6-23, 6-25
Frame Wldt, Crossmember, 4 Wheel, 2-65
Frame Wldt, Main [S30], 2-7
Frame, Drive End, 5-21
Frame, End, 5-21, 6-19
Frame, End, Drive, 6-19
Fuel Pump Cover Plate, 5-25
Fuelline, .31d 05if/05if, Stl, 2-45
Fuse, 60a, 32vdc [Fem Maxi], 3-29
Fuse, Blade, 002a, 32vdc, 3-25
Fuse, Blade, 005a, 32vdc, 3-25
Fuse, Blade, 020a, 32vdc, 3-25
Fuse, Blade, 030a, 32vdc, 2-173
Fuse, Blade, 060a [Maxi], 2-31, 2-33
Fuse, Blade, 15a, 32v [Mini], 2-31, 2-33
Fuse, Blade, 25a, 32vdc [Mini], 2-31, 2-33
Fuse, Blade, 40A [Maxi], 2-173
Fuseholder, Cab, 3-25

G

Gasket, 5-3, 5-4, 5-10, 5-23, 5-27, 5-28, 5-29, 5-30, 6-3, 6-29
Gasket [Ku], 2-51, 2-53, 6-11, 6-20, 6-26
Gasket Ku, 5-11
Gasket Set, 6-4
Gasket Set, Lower, 5-4
Gasket Set, Upper, 5-5, 6-5
Gasket, 2.00, 06.30w 10.63l, Adh, 2-101
Gasket, Bearing Case, 5-9
Gasket, Bearing Case Cover, 5-9
Gasket, Bearing, Case [Ku], 6-9
Gasket, Case, Gear [Ku], 6-7, 6-9
Gasket, Cover, Gov [Ku], 6-28
Gasket, Cover, Head, Cyl [Ku], 6-10
Gasket, Cover, Spd [Ku], 6-27
Gasket, Cyclinder Head, 5-5
Gasket, Delivery Valve, 5-27
Gasket, Ex-manifold, 5-11
Gasket, F/ Bolt [Ku], 6-10, 6-20, 6-26, 6-27
Gasket, F/ Screw [Ku], 6-23, 6-25
Gasket, Ftg, Banjo [Ku], 6-23, 6-25
Gasket, Fuel Pump, 5-25
Gasket, Gear Case, 5-7
Gasket, Head Cover, 5-10
Gasket, Head, Cyl [Ku], 6-5
Gasket, Hsg, Thermostat [Ku], 6-29
Gasket, Manifold, Exhaust, 6-11
Gasket, Manifold, Intake [Ku], 5-11
Gasket, Manifold, Intake [Ku], 6-11
Gasket, Neo, .06, 02.00w 02.00l, Adh, 2-103
Gasket, Oil Pan, 5-4
Gasket, Pan, Oil, 6-4
Gasket, Panel, Instmt, 2-31
Gasket, Panel, Switch, 2-31, 2-33
Gasket, Pump, Fuel [Ku], 6-23
Gasket, Pump, Water [Ku], 6-8
Gasket, Rbr, .13, 07.87w 09.84l, Adh, 2-17
Gasket, Rbr, Dust Chute, 2-85, 2-87
Gasket, Rbr, Pedal, Propel, 2-75
Gasket, Sender, Fuel, 2-45
Gasket, Sensor, Thermal, 2-81, 2-83
Gasket, Solenoid, Throttle [Ku], 2-43, 6-23
Gasket, Thermostat, 5-31
Gasket, Thrtl Blk, 5-28
Gasket, Ure, .50, 07.47w, 15.47l, Adh, 3-15
Gasket, Valve, Injector [Ku], 6-25
Gasket, Water Flange, 5-31
Gasket, Water Pump, 5-8
Gasket,Harness, 2-31, 2-33
Gasspring, 072lb, 06.2strk, 2-19, 2-23
Gauge, Oil, 5-4
Gauge, Oil [Ku], 6-4
Gear, 5-21, 6-19
Gear, Camshaft, 5-15
Gear, Camshaft [Ku], 6-15
Gear, Crankshaft, 5-17
Gear, Cshft [Ku], 6-17
Gear, Governor, 5-13
Gear, Govnr [Ku], 6-13
Gear, Idler, Cam [Ku], 6-15
Gear, Injection Pump, 5-13
Gear, Injection, Pump [Ku], 6-13
Gear, Oil Pump Drive, 5-17
Gear, Pump, Oil [Ku], 6-17
Gear, Ring, 5-19
Gear, Ring [Ku], 6-18
Geroler, Motor, Hyd, 4-13, 4-15
Geroter,Ring In En, 4-23
Geroter,Ring Ot En, 4-23
Gerotor Set, Motor, Hyd, 4-2, 4-3
Gerotor, Pump, Hyd, 4-17, 4-19
Glovenet-525 Document Rack/Net 60200104-, 2-25
Glowplug [Ku], 6-20
Grill, 2-19, 2-21
Grill Wldt, Rear, Rh, 2-21
Grill Wldt, Screen, Rear, Rh, 2-21
Grill, Cooler, Oil, 2-19
Grill, Eng, 2-19
Grill, Rear, 2-19
Grommet, Rbr, .25Id .375Od, 4-11
Grommet, Rbr, .50Id 1.0Od, 4-11
Grommet, Rbr, 0.62id, F/0.9h, .06 Matl, 2-101
Grommet, Rbr, 0.63id, F/0.8h, .12 Matl, 3-5, 3-9
Grommet, Rbr, 0.75id, F/1.3h, .12 Matl (CE Only), 2-13
Grommet, Rbr, 0.89id, F/1.2h, .14 Matl, 3-25
Grommet, Rbr, 1.00id, F/1.4h, .12 Matl, 3-5, 3-9
Guard Wldt, Ohg, Top, 3-19, 3-21
Guard, Belt, Compressor, 3-31
Guard, Belt, Dsl, W/ Label, Replmt, 2-49
Guard, Brush, 2-107, 2-109, 3-11
Guard, Fan, 2-59
Guard, Hose, Rbr, 5.0l, 2-107, 2-109
Guard, Hose, Rbr, 8.0l, 2-55

Guard, Hose, Wrap, Plstc, 37.0, 2-61
Guard, Rear, Lh [4-Wheel], 2-63
Guard, Rear, Rh [4-Wheel], 2-63
Guard, String, Motor, Brush, 2-107, 2-109, 3-11
Guide Assy, Oil Gauge, 5-4
Guide, Exhaust Valve, 5-5
Guide, Inlet Valve, 5-5
Guide, Valve, Exhaust, 6-5
Guide, Valve, Inlet, 6-5

H

Handle, Door, Cab, 3-27
Handle, Locking, Cab, 3-27
Harness, Backup, Rev [S30], 3-3, 3-5, 3-7, 3-9
Harness, Cover, Hppr [S30], 2-173
Harness, Ele [Extn, Telemetry], 3-38
Harness, Eng, Dsl [S30], 2-173
Harness, Hppr [S30], 2-173
Harness, Main [S30 Xp] (S30 XP Only), 2-173
Harness, Main, [S30] (S30 Only), 2-173
Harness, Ohg [S30], 3-3, 3-5, 3-7, 3-9
Harness, Switch, Seat, Ce [S30 Xp] (CE Only) (S30 XP Only), 2-173
Harness, Switch, Seat, Ce [S30] (CE Only) (S30 Only), 2-173
Harness, Wire, Cab, 3-34
Head, Cyl, 5-5
Head, Cyl, W/O Valves, 5-5
Head, Cylinder [Ku], 6-5
Headlight, 12vdc, 35watt 2.8a, Halogen, 2-89, 2-91
Heater & A/C Assy, W/Fan, 4-11
Heater Unit, W/ A/C & Fan, 3-23
Hinge, 2-23
Hinge Wldt, 2-81, 2-83, 3-15
Hinge Wldt, Cover, Hppr, Lh, 2-91
Hinge Wldt, Cover, Hppr, Rh, 2-91
Hinge Wldt, Hppr, 2-81, 2-83
Hinge Wldt, Shrd, Lh, 2-21, 2-27, 2-29
Hinge Wldt, Shrd, Lower Lh, 2-27
Hinge Wldt, Shrd, Rh, 2-15, 2-21
Hinge Wldt, Shrd, Side, Lh, 2-29
Hinge, .25pin .12 4.0w 04.0l, 4/.44sl, 2-19
Hinge, .25pin .12, Cover, Top, 2-25
Hinge, .40pin 2.2w 02.0l, 4/0.21h, 3-15, 3-17
Hinge, Bracket, Door, Cab, 3-27
Hinge, Rbr, 2-85, 2-87
Holder,, 5-13
Holder, Delivery Valve, 5-27
Holder, Gear [Ku], 6-13
Holder, Governor Gear, 5-13
Holder, Govnr [Ku], 6-13
Holder, Valve, Inj [Ku], 6-25
Hook, Engine 1, 5-5
Hook, Engine 2, 5-5
Hopper Wldt, Stl, Rear Dump, 2-83
Hopper, Plstc, Trimmed, 2-81
Horn, 12vdc, Dba [Wolo], 2-7
Hose Assy, W/2cuff, 4.0d 156l 4.0/4.0, 3-15, 3-17
Hose Kit, Hyd, Replmt [S30], 2-125, 2-129, 2-133, 2-145, 2-147
Hose Kit, Rear Drive, Replmt, 2-61, 2-123, 2-127, 2-141
Hose, 0050, 04, If05str / Im05str, 10.0, 2-45
Hose, 0300, 08, Jf08str / None, 19.0, 2-39
Hose, A/C, 06, E90/E90, 021.0l [R134], 3-31
Hose, A/C, 06, E90/E90, 052.0l [R134], 3-31
Hose, A/C, 08, E90/E90, 052.0l [R134], 3-31
Hose, A/C, 10, E90/E90, 060.0l [R134], 3-31
Hose, Afmkt, Rbr, Heater, 0.62id, 20ft, 3-29
Hose, Coolant, Upper, Dsl, 2-55
Hose, Drain, Overflow, Radiator, 2-57, 2-59
Hose, Exhaust, Vacuum, 5.0id, 40.0l, 3-17
Hose, Fuel [Ku], 6-20
Hose, Fuel, 0.31id [Evap Emission 07], 2-45
Hose, Fuel, 0.18id, 29.0l, 2-57, 2-59
Hose, Fuel, 0.18id, 54.0l, 2-45
Hose, Hyd, Med04, Ff04str/Ff04str, 042.0, 2-133
Hose, Hyd, Med04, Ff04str/Ff04str, 051.0, 2-133
Hose, Hyd, Med04, Ff04str/Ff04str, 052.0, 2-133
Hose, Hyd, Med04, Ff04str/Ff04str, 42.0, 2-133
Hose, Hyd, Med04, Jf04e45/Jf04str, 038.0, 2-123, 2-127, 2-131
Hose, Hyd, Med04, Jf04e45/Jf04str, 078.0, 2-123, 2-127
Hose, Hyd, Med04, Jf04str/Jf04str, 042.0, 2-131
Hose, Hyd, Med04, Jf04str/Jf04str, 046.0, 2-131
Hose, Hyd, Med04, Jf04str/Jf04str, 051.0, 2-131
Hose, Hyd, Med04, Jf04str/Jf04str, 052.0, 2-131
Hose, Hyd, Med04, Jf04str/Jf04str, 37.0, 2-123, 2-127, 2-131
Hose, Hyd, Med04, Jf04str/Jf04str, 42.0, 2-131
Hose, Hyd, Med10, Ff10str/Ff10str, 024.0, 2-133
Hose, Hyd, Med10, Jf10e90/Jf10str, 27.0, 2-123, 2-127
Hose, Hyd, Med10, Jf10str/Jf10str, 024.0, 2-131
Hose, Hyd, Med16, Jf16e90/Jf16str, 016.0, 2-123, 2-127, 2-131
Hose, Hyd, Med16, Jf16e90/Jf16str, 019.0, 2-131
Hose, Hyd, Med16, Jf16e90/Jf16str, 19.0, 2-123, 2-127
Hose, Hyd, Spcl, Ff10e45/Ff10str, 056.0, 2-125, 2-129
Hose, Hyd, Spcl, Ff10e45/Ff10str, 56.0, 2-123, 2-127
Hose, Hyd, Spcl, Ff10str/Ff10str, 046.0, 2-123, 2-125, 2-127, 2-129
Hose, Hyd, Spcl, Ff12e45/Ff12str, 025.0, 2-133
Hose, Hyd, Spcl, Ff12e45/Ff12str, 028.0, 2-133
Hose, Hyd, Spcl, Jf10e45/Jf10str, 029.0, 2-131, 2-133
Hose, Hyd, Spcl, Jf12e45/Jf12str, 025.0, 2-131
Hose, Hyd, Spcl, Jf12e45/Jf12str, 028.0, 2-131
Hose, Hyd, Suc12, Ff12e45/Ff12str, 32.0, 2-133
Hose, Hyd, Suc12, Ff12str/Ff12str, 025.0, 2-125, 2-129
Hose, Hyd, Suc12, Jf12e45/Jf12str, 32.0, 2-131
Hose, Hyd, Suc12, Jf12str/Jf12str, 27.0, 2-123, 2-127
Hose, Hyd, Suc20, Ff20e45/Ff20str, 022.5, 2-125, 2-129
Hose, Hyd, Suc20, Ff20e45/Ff20str, 025.0, 2-133
Hose, Hyd, Suc20, Jf20e45/Jf20str, 022.5, 2-123, 2-127
Hose, Hyd, Suc20, Jf20e45/Jf20str, 025.0, 2-131
Hose, Hyd, Tc04, Ff04e45/Ff04str, 038.0, 2-125, 2-129, 2-133
Hose, Hyd, Tc04, Ff04e45/Ff04str, 078.0, 2-125, 2-129
Hose, Hyd, Tc04, Ff04e90/Ff04str, 042.0, 2-129, 2-133
Hose, Hyd, Tc04, Ff04e90/Ff04str, 092.0, 2-125, 2-129, 2-133
Hose, Hyd, Tc04, Ff04e90/Ff04str, 126.0, 2-129, 2-133, 3-11
Hose, Hyd, Tc04, Ff04e90/Ff04str, 21.0, 2-133
Hose, Hyd, Tc04, Ff04str/Ff04str, 018.0, 2-125, 2-129, 2-133
Hose, Hyd, Tc04, Ff04str/Ff04str, 037.0, 2-125, 2-129, 2-133
Hose, Hyd, Tc04, Jf04e90/Jf04str, 042.0, 2-127, 2-131
Hose, Hyd, Tc04, Jf04e90/Jf04str, 092.0, 2-123, 2-127, 2-131
Hose, Hyd, Tc04, Jf04e90/Jf04str, 126.0, 2-127, 2-131, 3-12
Hose, Hyd, Tc04, Jf04e90/Jf04str, 21.0, 2-131
Hose, Hyd, Tc04, Jf04str/Jf04str, 018.0, 2-123, 2-127, 2-131
Hose, Hyd, Tc04, Jf04str/Jf04str, 039.0, 2-123, 2-127, 2-131

Hose, Hyd, Tc06, Ff06e90/Ff06str, 026.0, 2-133
Hose, Hyd, Tc06, Ff06e90/Ff06str, 028.0, 2-125, 2-129
Hose, Hyd, Tc06, Ff06e90/Ff06str, 030.0, 2-133
Hose, Hyd, Tc06, Ff06e90/Ff06str, 054.0, 2-125, 2-129
Hose, Hyd, Tc06, Ff06e90/Ff06str, 062.0, 2-125, 2-129
Hose, Hyd, Tc06, Ff06e90/Ff06str, 080.0, 2-125, 2-129
Hose, Hyd, Tc06, Ff06e90/Ff06str, 086.0, 2-125, 2-129, 2-133
Hose, Hyd, Tc06, Ff06e90/Ff06str, 102.0, 3-11
Hose, Hyd, Tc06, Ff06e90/Ff06str, 134.0, 2-125, 2-129, 2-133
Hose, Hyd, Tc06, Ff06e90/Ff06str, 20.0, 2-133
Hose, Hyd, Tc06, Ff06e90/Ff06str, 58.0, 2-133
Hose, Hyd, Tc06, Ff06e90/Ff06str, 84.0, 2-133
Hose, Hyd, Tc06, Ff06str/Ff06str, 048.0, 2-125, 2-129, 2-133
Hose, Hyd, Tc06, Jf06e90/Jf06str, 026.0, 2-131
Hose, Hyd, Tc06, Jf06e90/Jf06str, 028.0, 2-123, 2-127
Hose, Hyd, Tc06, Jf06e90/Jf06str, 030.0, 2-131
Hose, Hyd, Tc06, Jf06e90/Jf06str, 062.0, 2-123, 2-127
Hose, Hyd, Tc06, Jf06e90/Jf06str, 102.0, 3-12
Hose, Hyd, Tc06, Jf06e90/Jf06str, 134.0, 2-123, 2-127, 2-131
Hose, Hyd, Tc06, Jf06e90/Jf06str, 20.0, 2-131
Hose, Hyd, Tc06, Jf06e90/Jf06str, 50.0, 2-123, 2-127, 2-131
Hose, Hyd, Tc06, Jf06e90/Jf06str, 54.0, 2-123, 2-127
Hose, Hyd, Tc06, Jf06e90/Jf06str, 58.0, 2-131
Hose, Hyd, Tc06, Jf06e90/Jf06str, 84.0, 2-131
Hose, Hyd, Tc06, Jf06e90/Jf06str, 86.0, 2-123, 2-127, 2-131
Hose, Hyd, Tc06, Jf06str/Jf06e90, 080.0, 2-123, 2-127
Hose, Hyd, Tc06, Jf06str/Jf06str, 048.0, 2-123, 2-127, 2-131
Hose, Hyd, Tc08, Ff06e90/Ff06str, 120.0, 3-11
Hose, Hyd, Tc08, Ff08e90/Ff08str, 018.0, 2-125, 2-129, 2-133
Hose, Hyd, Tc08, Ff08e90/Ff08str, 034.0, 2-125, 2-129, 2-133
Hose, Hyd, Tc08, Ff08e90/Ff08str, 042.0, 2-125, 2-129, 2-133
Hose, Hyd, Tc08, Ff08e90/Ff08str, 052.0, 2-125, 2-129, 2-133
Hose, Hyd, Tc08, Ff08str/Ff08str, 040.0, 2-125, 2-129, 2-133
Hose, Hyd, Tc08, Ff08str/Ff08str, 041.0, 2-125, 2-129, 2-133
Hose, Hyd, Tc08, Jf06e90/Jf06str, 120.0, 3-12
Hose, Hyd, Tc08, Jf08e90/Jf08str, 018.0, 2-123, 2-127, 2-131
Hose, Hyd, Tc08, Jf08e90/Jf08str, 034.0, 2-123, 2-127, 2-131
Hose, Hyd, Tc08, Jf08e90/Jf08str, 40.0, 2-123, 2-127, 2-131
Hose, Hyd, Tc08, Jf08e90/Jf08str, 52.0, 2-123, 2-127, 2-131
Hose, Hyd, Tc08, Jf08str/Jf08e90, 42.0, 2-123, 2-127, 2-131
Hose, Hyd, Tc08, Jf08str/Jf08str, 040.0, 2-123, 2-127, 2-131
Hose, Hyd, Tc08, Jf08str/Jf08str, 37.0, 2-123, 2-127, 2-131
Hose, Hyd, Tc10, Ff10e90/Ff10str, 027.0, 2-125, 2-129
Hose, Hyd, Tc10, Ff10e90/Ff10str, 42.0, 2-135
Hose, Hyd, Tc10, Jf10e90/Jf10str, 42.0, 2-135
Hose, Hyd, Tc12, Ff12e90/Ff12str, 014.0, 2-125, 2-129, 2-133
Hose, Hyd, Tc16, Ff16e90/Ff16str, 016.0, 2-125, 2-129, 2-133
Hose, Hyd,Med, Jf16str/Jf16e90, 16.0, 2-123, 2-127, 2-131
Hose, Intake, Mold, 1.75id 2.00id [Epdm], 2-47
Hose, Med04, Jf04e45/Jf04str, 86.0, 2-123, 2-127
Hose, Nozzle, Floor, 3-15, 3-17
Hose, Pvc, Clr, 0.38id 0.56od 022.0l, 2-55
Hose, Rbr, 3-15, 3-17
Hose, Rbr, 1.25id 1.25id, 2-55
Hose, Rbr, 2.00id 2.50od 02.5l, 2-47
Hose, Rbr, E90, 1.25id 1.25id 04.2 02.6, 2-55
Hose, Sleeve, Fire, 2-131, 2-133
Hose, Vacuum, 0.16id X 012.0l, 2-101
Hose, Water [Ku], 6-29
Housing, 4-17, 4-19
Housing Assy, Nozzle, 5-23, 6-20, 6-21
Housing En, 4-21
Housing S/A En, 4-21
Housing Wldt, Sppt, Drive, Lh, 2-63
Housing Wldt, Sppt, Drive, Rh, 2-63
Housing, Brg, Motor, Hyd, 4-13, 4-15
Housing, Brg, Pivot, Door, 2-85, 2-87
Housing, Fltr, Trimmed, 2-101
Housing, Flywheel, Mach, Dsl, 3 Wheel (S30 Only), 2-39
Housing, Flywheel, Mach, Dsl, 4 Wheel (S30 X4 Only), 2-39
Housing, Motor, Hyd, 4-2, 4-3
Housing, Sppt, Drive, 2-61
Housing, Thermostat [Ku], 5-31, 6-29
Housing, Valve, 4-13, 4-15
Housing,Control, 4-25
Hub Assy, Wheel, 5 Bolt 4.50bc Taper B, 2-61, 2-63
Hub Wldt, 2-77
Hub, Adapter, Brush, 1.00b, 2-107, 2-109, 3-11

I

Idling, Apparatus [Ku], 6-26
Impeller Assy, Vacfan [Coyote], 2-101
Impeller, Pump, Water [Ku], 6-8
Impeller, Water Pump, 5-8
Indicator, Ele, [Multi-Display], 2-31
Indicator, Press, 60psi (S30 only), 2-135
Indicator, Service, Fltr, Air [20h20 Dn], 2-47
Indicator, Timing [Ku], 6-18
Innertube, 6.00 X 9.00 [Js-2], 2-71
Innertube, Valve [5.00r-8, Js2, 500-8], 2-66
Insert, Plate, Cam, Pump, Hyd, 4-17, 4-19
Instr, Maint, Wall Chart [Rotomold S30] (ONLINE ONLY), 3-40
Instr, Maint, Wall Chart[S30-Online], 3-40
Instr, Motor, Hyd, Repair [En], 4-2
Instr, Repair, Motor, Hyd, Gear, 4-13, 4-15
Instr, Repair, Pump, 4-17, 4-19
Instr, Valve, Steering, Repair, 4-5
Instruction, Repair, Motor, Hyd, 4-3
Insulation, Acstc, 0.5, 03.0 X 23.0 Adh, 2-21
Insulation, Acstc, 0.5, 05.5 X 23.0 Adh, 2-21
Insulation, Acstc, 0.5, 11.5 X 14.5 Adh, 2-21
Insulation, Acstc, 2.0, 02.0 X 12.0, 2-9, 2-11
Insulation, Acstc, Rnd, 0.8, 02.5d 0.5h, 2-37
Insulation, Flame-Retardant, 0.5, 2-45
Insulation, Flame-Retardant, 0.75-0.88, 2-13, 2-15
Insulation, Flame-Retardant, 1.0, 2-23
Insulation, Flame-Retardant, 1.00, 2-17, 2-19, 2-27
Insulation, Heat, Liner, Lh, 3-25
Insulation, Heat, Liner, Rh, 3-25
Insulation, Sound, Liner, 3-25
Insulation, Sound, Liner, Lh, 3-25
Insulation, Sound, Liner, Rh, 3-25
Insulation, Sound, Liner, Side, Lh, 3-25
Insulation, Sound, Liner, Side, Rh, 3-25
Insulation, Sound, Liner, Top, 3-25
Isolator, Rbr, 2-51, 2-53
Isolator, Vib, Bshg, 1.1d 0.6l .4b 0.78h, 2-57, 2-59, 2-77, 2-101, 2-145, 2-147
Isolator, Vib, Flng, 1.3h .4b 2/.34h, 2-39

K

Key, 5-17
Key [Ku], 6-15, 6-17
Key En, 4-23
Key, Feather, 5-15
Key, Ignition, 1-1
Key, Ignition [Replmt W/O Dust Boot], 2-31, 2-33
Key, Latch, Door Assy, 3-27
Key, Motor, Hyd, 4-13, 4-15
Key, Shaft, Pump, Hyd, 4-17, 4-19
Key, Sq, 0.12 X 0.12, 0.50l, 2-101
Key, Woodruff, 5-13
Key, Woodruff [Ku], 6-13
Key, Woodruff, 0.25 1.00, [Asa#0808], 4-2
Kit, Rotating, Pump, Hyd, 4-17, 4-19
Kit, Seal, Hyd, Pump, 4-17, 4-19
Kit, Seal, Motor, Hyd, 4-2, 4-3, 4-13, 4-15
Kit, Shim, 4-17, 4-19
Knob, 2-111, 3-11, 4-11
Knob Assy, Star, 1.12d 3ear M06x1.0 0.8l, 2-81, 2-83
Knob Assy,Star,1.97d 4ear M10x1.5 10.75l, 2-105
Knob, 1.12d 3.86l M10 X 1.5, Plstc Tpr], 2-105, 2-113
Knob, Rnd, 2.38d 0.88l M6 X 1.0, Plstc, 2-81, 2-83
Knob, Star, 2.20d 8ear 1.1l M10x1.5, Nyl, 2-113, 2-115
Knob, Star, 2.75d 4ear 1.1l M8x1.25, 2-103
Knob, Star, 2.75d 4ear 1.1l M8x1.25,Thru, 2-103
Knob, Tee, 0.38-16, 2.5 X 1.0 1.1l,Plstc, 2-37

L

Label [Fuse Block], 3-25
Label Set, Hi Temp, 2-175
Label Set, Info/Hzrd [Multi-Mach], 2-175
Label Set, Info/Hzrd, Misc, Ce (CE Only), 2-175
Label Set, Info/Hzrd, Misc, Tj (Japan Only), 2-175
Label, Caution, Battery, Tj (Japan Only), 2-175
Label, Circuitbreaker [Fuse Box], 3-25
Label, Cyclone [S30], 2-175
Label, Handle, Lift, 2-175
Label, Info [Exit], 3-23
Label, Info, Arm, Brush, 2-117, 2-175
Label, Info, Hyd Fluid, Na / Ce (Japan Only), 2-175
Label, Level, Sound [100 Db] (CE Only), 2-175
Label, Logo, 10.4l, White [Tennant], 2-175
Label, Opertnl, Telem [Fcc/Ic], 3-38
Label, Panl, Instmt, Basic, 2-31
Label, Panl, Instmt, Rh, 2-31, 2-33
Label, White [S30], 2-175
Lamp, 12vdc, 0.5a, 04cp [#1157], 2-7
Lamp, 12vdc, 37.5watt, Halogen, 2-89, 2-91
Lamp, Bulb, Flsh, 3-3, 3-5
Lamp, Bulb, Strobe, 3-7, 3-9
Lamp, Clr, 12vdc [#3157 Series], 3-7, 3-9
Latch, 2-17, 2-19, 2-21, 2-23, 2-25, 2-27, 2-29, 2-89, 2-91
Latch Kit, Door, Access, Ci [S30], 2-81, 2-83
Latch Wldt, Bolt, 2-81, 2-83
Latch, Bolt, 2-9, 2-11
Latch, Cab, 3-27
Latch, Cmpr, M5 X 0.8 Blk, 2-117
Latch, Cmpr, Spring, Knurled Knob, Pl, 2-17, 2-57
Latch, Hook, 2-9, 2-11
Leg Wldt, Guard, Lh, 3-19, 3-21
Leg Wldt, Guard, Rh, 3-19, 3-21
Lens Assy, W/ Reflector, 2-89, 2-91
Lens, Amb, F/ Strobe / Flasher, 3-3, 3-5, 3-7, 3-9
Lens, Blu, F/ Strobe / Flasher, 3-3, 3-5, 3-7, 3-9
Lens, Red, F/ Strobe / Flasher, 3-3, 3-5, 3-7, 3-9
Lever Assy, 177.8 X 45, 2-71
Lever Assy, Fork [KU], 6-28
Lever Wldt, Brush, Side, 2-105
Lever Wldt, Lift, Brush, Main, 2-113
Lever, Cntrl, Spd [Ku], 6-27
Lever, Engine Stop, 5-29
Lever, Fork [Ku], 6-28
Lever, Fork 2, 5-30
Lever, Fork, Shaft [Ku], 6-28
Lever, Lift, Brush, 2-111, 3-11
Lever, Plate, Cntrl [Ku], 6-27
Lever, Pump, 2-77
Lever, Speed Control, 5-29
Lever, Stop [Ku], 6-27
Light Kit, Inside, Ci [S30], 3-3, 3-5
Light Kit, outdoor, Ci [S30], 3-7, 3-9
Light, Dome, Cab, 3-25
Light, Flsh, 12vdc, Amb, Rwk, 3-3, 3-5
Light, Led, White, 12-24vdc, 3-3, 3-5, 3-7, 3-9
Light, Panl, 14vdc, 1.1 X 1.0, 2-31, 2-33
Light, Panl, 14vdc, 1.1 X 1.0 (CE Only), 2-31, 2-33
Light, Strobe, Amb, 12-48vdc, Rwk, 3-7, 3-9
Link, 0.19, 1.0w 16.5l, 1/0.5h 1/0.4sl, 2-89
Link, Crank, Limiter, 2-75
Link, Feedback, 4-25
Lip Wldt, Oprtr Station / Cab, 3-23
Lip Wldt, Station, Oprtr, 2-15
Lip, Station, Oprtr [Ii], 2-13
Lockwasher En, 4-21
Louver, Rt, Roll, 3-25

M

Magnet, Drive Brush, 2-17
Magnet, Pickup, 2-39
Maint Kit, 400Hr, Diesel [S30], 1-1
Manifold Assy, Inlet, 5-11, 6-11
Manifold, Exhaust [Ku], 6-11
Manifold, Exhaust, Front, Down, 5-11
Manual, Eng [Kubo, V1505e], 3-40
Manual, Oprtr [S30 Dsl, Bg, Ce], 3-40
Manual, Oprtr [S30 Dsl, Cz, Ce], 3-40
Manual, Oprtr [S30 Dsl, De, Ce], 3-40
Manual, Oprtr [S30 Dsl, Dk, Ce], 3-40
Manual, Oprtr [S30 Dsl, Ee, Ce], 3-40
Manual, Oprtr [S30 Dsl, En, Ce], 3-40
Manual, Oprtr [S30 Dsl, Es, Ce], 3-40
Manual, Oprtr [S30 Dsl, Fi, Ce], 3-40
Manual, Oprtr [S30 Dsl, Fr, Ce], 3-40
Manual, Oprtr [S30 Dsl, Gr, Ce], 3-40
Manual, Oprtr [S30 Dsl, Hu, Ce], 3-40
Manual, Oprtr [S30 Dsl, It, Ce], 3-40
Manual, Oprtr [S30 Dsl, Lt, Ce], 3-40
Manual, Oprtr [S30 Dsl, Lv, Ce], 3-40
Manual, Oprtr [S30 Dsl, Nl, Ce], 3-40
Manual, Oprtr [S30 Dsl, No, Ce], 3-40
Manual, Oprtr [S30 Dsl, Pl, Ce], 3-40
Manual, Oprtr [S30 Dsl, Pt, Ce], 3-40
Manual, Oprtr [S30 Dsl, Ro, Ce], 3-40
Manual, Oprtr [S30 Dsl, Ru, Ce], 3-40
Manual, Oprtr [S30 Dsl, Se, Ce], 3-40
Manual, Oprtr [S30 Dsl, Si, Ce], 3-40
Manual, Oprtr [S30 Dsl, Sk, Ce], 3-40
Manual, Oprtr [S30 Dsl, Tr, Ce], 3-40
Manual, Oprtr [S30, Dsl En Na], 3-40
Manual, Oprtr [S30, Dsl Es Na], 3-40
Manual, Oprtr [S30, Dsl Fr Na], 3-40
Manual, Oprtr [S30, Dsl Jp], 3-40
Manual, Parts [S30, Dsl En], 3-40
Manual, Service [S30 EN], 3-40
Mat, Floor (S30XP Only), 2-13, 2-15
Media, Oprtr, DVD [S30 EN ES FR], 3-40
Metal, Crankpin, 5-17
Metal, Crankpin 02, 5-17
Metal, Crankpin 04, 5-17
Metal, Crankshaft 1, 5-17
Metal, Crankshaft 2, 5-17
Metal, Crankshaft 3, 5-17
Metal, Crankshaft1 02, 5-17
Metal, Crankshaft1 04, 5-17
Metal, Crankshaft2 02, 5-17
Metal, Crankshaft2 04, 5-17
Metal, Crankshaft3 02, 5-17
Metal, Crankshaft3 04, 5-17
Metal, Side 1, 5-17
Metal, Side 1 02, 5-17
Metal, Side 1 04, 5-17
Metal, Side 2, 5-17
Metal, Side 2 02, 5-17
Metal, Side 2 04, 5-17
Mirror, Convex, 0.50d, 3-23
Mirror, Convex, 06.7 X 06.2, 3-19, 3-21, 3-23
Molding, Afmkt, Trim, Pvc, .18 .31, 08ft, 2-19, 2-27

Molding, Afmkt, Trim, Pvc, .18 .31, 12ft, 2-89
Motor, Ele, 2200rpm 0.08hp 06.0a, Shakr, 2-103
Motor, Hyd, Gear, [In] 02.8 1500, 4-2
Motor, Hyd, Gear, [In] 17.9 B 1500, 4-3
Motor, Hyd, Gear, [Int], 19.0 X 3000, 4-13
Motor, Hyd, Gear, Ext 0.28 Rh 3000, 2-101
Motor, Hyd, Gear, Ext 0.67 Rh 2500, 2-57, 2-59
Motor, Hyd, Gear, Int 02.8 Bi-Dir 1500 (See Breakdowns), 2-117
Motor, Hyd, Gear, Int 02.8 Bi-Dir 2500, 2-117
Motor, Hyd, Gear, Int 07.9 Bi-Dir 3000, 2-63
Motor, Hyd, Gear, Int 15.0 Bi-Dir 3000 (See Breakdowns), 2-61
Motor, Hyd, Gear, Int 17.1 Bi-dir 3000, 4-15
Motor, Hyd, Gear, Int 17.1 Bi-Dir 3000 (See Breakdowns), 2-61
Motor, Hyd, Gear, Int 17.9 Bi-Dir 1500 (See Breakdowns), 2-107, 2-109, 3-11
Motor, Hyd, Gear, Int 17.9 Bi-Dir 2500, 2-107, 2-109, 3-11
Motor, Info, Repair, 2-101
Motor, Starter, 12vdc [Kubota] (See Engine Breakdown), 2-39
Motor, Wiper, Cab, 3-23
Muffler, Exhaust, 2-51, 2-53

N

Nozzle, Spring [Ku], 6-21
Nut, 5-7, 5-11, 5-12, 5-25, 5-28, 5-29, 5-31, 6-11, 6-19
Nut [Ku], 6-21, 6-23
Nut En, 4-21
Nut, Cap, 5-10, 5-13, 5-25, 5-28
Nut, Cap [Ku], 6-26
Nut, Cap, Cam [Ku], 6-13
Nut, Coil, Nyl Patch, 4-7, 4-9
Nut, Flange [Ku], 6-20
Nut, Hex [Ku], 6-7, 6-12, 6-19, 6-23, 6-26, 6-27
Nut, Hex, Cap, 6-10
Nut, Hex, Flexlock, .50-20, 2-65
Nut, Hex, Flng, M10 X 1.50, 2-13, 2-15, 2-103, 3-31
Nut, Hex, Flng, M5 X 0.80, 2-17, 2-93, 2-95, 3-15
Nut, Hex, Flng, M6 X 1.00, 2-15, 2-21, 2-25, 2-29, 2-40, 2-49, 2-51, 2-53, 2-59, 2-85, 2-87, 3-5, 3-9, 3-31
Nut, Hex, Flng, M8 X 1.25, 2-7, 2-19, 2-21, 2-23, 2-25, 2-27, 2-45, 2-51, 2-53, 2-57, 2-61, 2-63, 2-75, 2-89, 2-91, 2-107, 2-109, 2-135, 2-141, 3-25, 3-31
Nut, Hex, Jam, .38-16, 2-69
Nut, Hex, Jam, .38-16, Lh, 2-69
Nut, Hex, Jam, .50-20, 2-69
Nut, Hex, Jam, .75-16, 2-63
Nut, Hex, Jam, .75-16, Lh, 2-63
Nut, Hex, Jam, M10 X 1.5, Ss, 2-105, 2-113, 2-115
Nut, Hex, Jam, M20 X 1.5, 2-35, 2-37
Nut, Hex, Lock, .25-20, Nl, 2-77, 2-79
Nut, Hex, Lock, .31-18, Nl, 2-17
Nut, Hex, Lock, .31-18, Nl (S30XP Only), 2-17
Nut, Hex, Lock, .31-18, Nl, Thin, 2-19, 2-23
Nut, Hex, Lock, .31-24, Nl, 2-57, 2-59
Nut, Hex, Lock, .38-16, Nl, Thin, 2-49
Nut, Hex, Lock, .75-10, Nl, 2-61, 2-63, 2-117
Nut, Hex, Lock, #10-24, Nl, 2-73
Nut, Hex, Lock, M10 X 1.5, Nl, 2-7, 2-39, 2-49, 2-53, 2-57, 2-59, 2-71, 2-77, 2-87, 2-101, 2-105, 2-115, 3-17, 3-19, 3-21, 3-31
Nut, Hex, Lock, M10 X 1.5, Nl, Ss, 2-97, 3-3, 3-7
Nut, Hex, Lock, M12 X 1.75, Nl, 2-65, 2-69, 2-71, 2-117
Nut, Hex, Lock, M14 X 2.00, Nl, 2-65
Nut, Hex, Lock, M4 X 0.70, Nl, 2-7, 2-17, 2-19, 2-21, 2-89, 2-91, 2-101, 3-23
Nut, Hex, Lock, M4 X 0.70, Nl, Ss, 2-73
Nut, Hex, Lock, M5 X 0.80, Nl, 2-93, 2-95, 2-105, 3-3, 3-5, 3-7, 3-9, 3-15, 3-17, 3-39
Nut, Hex, Lock, M6 X 1.00, Nl, 2-31, 2-33, 2-37, 2-43, 2-45, 2-57, 2-63, 2-77, 2-79, 2-81, 2-83, 2-101, 2-141, 2-143, 3-15, 3-17, 3-29, 3-31
Nut, Hex, Lock, M6 X 1.00, Nl, Ss, 1-1, 2-75, 2-79, 2-85, 2-87
Nut, Hex, Lock, M8 X 1.25, Nl, 2-7, 2-25, 2-39, 2-47, 2-49, 2-51, 2-53, 2-57, 2-59, 2-73, 2-77, 2-89, 2-93, 2-95, 2-101, 2-105, 2-107, 2-111, 2-113, 2-115, 2-117, 2-135, 2-149, 3-11
Nut, Hex, Lock, M8 X 1.25, Nl, Ss, 1-1, 2-81, 2-83, 2-85, 2-87, 2-103, 2-105, 3-23
Nut, Hex, Sltd, .75-16, 4-2
Nut, Hex, Sltd, 1.00-20, 2-69, 2-71
Nut, Hex, Sltd, 1.12-18, 2-61, 2-63
Nut, Hex, Std, .38-16, 2-51, 2-53, 3-27
Nut, Hex, Std, .75-10, 2-61
Nut, Hex, Std, M10 X 1.50, 2-115
Nut, Hex, Std, M12 X 1.75, 2-65
Nut, Hex, Std, M12 X 1.75, Ss, 2-9, 2-11
Nut, Hex, Std, M3 X 0, 3-25
Nut, Hex, Std, M6 X 1.00, 8, 2-75, 2-77, 2-79
Nut, Hex, Std, M6 X 1.00, Ss, 3-3, 3-5, 3-7, 3-9
Nut, Hex, Std, M8 X 1, 2-101
Nut, Hex, Std, M8 X 1.25, 2-103, 2-105
Nut, Hex, Std, M8 X 1.25, Brs, 2-49
Nut, Hexagon, 5-21
Nut, Jam, 4-21
Nut, Lock [Ku], 6-26
Nut, Motor, Hyd, 4-13, 4-15
Nut, Nozzle [Ku], 6-21
Nut, Wheel, .50-20 X 60 Angle, 2-61, 2-63, 2-71
Nut, Wing, .31-18, 2-49
Nut, Wing, M10 X 1.5, Pltd, 2-99

O

O-Ring, 5-3, 5-4, 5-5, 5-7, 5-17, 5-21, 5-27, 5-29
O-Ring [Ku], 6-4, 6-27
Ohg Kit, Ci [S30], 3-19, 3-21
Oil Filter, Plug, 5-7
Oil, Hyd [El, Iso 100, 01gal], 1-2
Oil, Hyd [El, Iso 100, 05gal], 1-2
Oil, Hyd [El, Iso 32, 01gal], 1-2
Oil, Hyd [El, Iso 32, 05gal], 1-2
Oil, Hyd [El, Iso 68, 01gal], 1-2
Oil, Hyd [El, Iso 68, 05gal], 1-2
Oil, Hydraulic 68 [20l] (CE ONLY), 1-2
Orifice, Valve En, 4-21

P

Pad, Pedal, Brake, 3.96l 2.36w 0.75, 2-73
Paint, Airdry, Blk, 12oz (NOT EUROPE), 1-1
Paint, Airdry, Gray, 12oz (NOT EUROPE), 1-1
Paint, Airdry, Iron Gray, 12oz (NOT EUROPE), 1-1
Paint, Airdry, Off-White, 12oz (NOT EUROPE), 1-1
Paint, Airdry, Teal, 12oz, Solid (NOT EUROPE), 1-1
Pan, Oil, Dsl, 6-4
Pane, Glass, Wndw, Front, 3-23
Pane, Glass, Wndw, Lh Side, Cab, 3-23
Pane, Glass, Wndw, Rear, 3-23
Pane, Wndw, Lower, Cab, 3-27
Pane, Wndw, Slide, Rh, Cab, 3-27
Panel Assy, Instmt, Basic, Replmt, 2-31
Panel Assy, Switch, Replmt, 2-31, 2-33
Panel Kit, Label, Replmt [S30], 2-33
Panel Kit, Replmt [S30], 2-33
Panel Wldt, Access, 2-75
Panel Wldt, Deflector, Heat, 2-45
Panel Wldt, Handle, Lift, 2-113
Panel Wldt, Heat, Shield, Lh, 2-21
Panel Wldt, Lift, 2-115
Panel Wldt, Mtg, Door, 2-85
Panel Wldt, Side, 2-13, 3-33
Panel Wldt, Top, Cab, 3-25
Panel, Heat, Shield, Rear, Lh, 2-21
Panel, Instrument, Basic, 2-31
Panel, Light, 2-31, 2-33
Panel, Roof, Plstc, Cab, 3-25
Panel, Seat, 2-17

Panel, Shrd, Eng, 2-21
Panel, Shrd, Seat, 2-15
Panel, Side, Access, 2-13, 2-15
Panel, Side, Access, Ce (CE Only), 2-13, 2-15
Panel, Switch Ii, 2-31, 2-33
Pedal Wldt, Brake, 2-73
Pedal, Propel, Lower, W/Tread, 2-75
Pedal, Propel, Upper, W/Tread, 2-75
Pin Assy, Side Brush W/ Clip, 2-107, 2-109, 3-11
Pin, Clamp, 5-27, 6-25
Pin, Clevis, 0.25d X 0.50l, 2-99
Pin, Clevis, 0.25d X 0.75l, 2-75
Pin, Clevis, 0.37d X 0.62l, 2-89
Pin, Clevis, 0.37d X 1.00l, 2-69
Pin, Clevis, 0.37d X 1.50l, 2-105, 2-111, 3-11
Pin, Clevis, 0.37d X 2.12l, 2-105
Pin, Clevis, 0.37d X 4.33l, 2-75
Pin, Clevis, 0.38d X 1.13l, 2-69, 2-113, 2-115
Pin, Clevis, 0.50d X 1.25l, 2-69
Pin, Clevis, 0.50d X 1.75l, 2-111, 2-115, 3-11
Pin, Clevis, 0.50d X 2.00l, 2-111, 3-11
Pin, Clevis, 0.50d X 2.25l, 2-85, 2-87
Pin, Clevis, 0.50d X 4.25l, 2-107, 2-111, 3-11
Pin, Clevis, 0.50d X 5.00l, 2-75, 2-107, 2-111, 3-11
Pin, Clevis, 0.50d X 5.50l, 2-107, 2-111, 3-11
Pin, Cotter, .062 X 0.75, 2-75
Pin, Cotter, .094 X 0.75, 2-69, 2-99, 2-111, 3-11
Pin, Cotter, .094 X 1.00, 2-105, 2-113
Pin, Cotter, .125 X 1.00, 2-69, 2-75, 2-105, 2-107, 2-111, 2-115, 3-11
Pin, Cotter, .125 X 1.25, 2-107, 2-117
Pin, Cotter, .125 X 1.75, 2-69, 2-71
Pin, Cotter, .125 X 2.50, 2-61, 2-63
Pin, Cotter, .156 X 1.25, 2-85, 2-87
Pin, Cotter, Hair, 0.38d .072 Wir, 2-75, 2-89
Pin, Dowel [Ku], 6-3
Pin, Dowel, Cyl Block [1pk=4], 2-39
Pin, Dowel, Pump, Hyd, 4-17, 4-19
Pin, Eng [Ku], 6-3
Pin, Headed, 4-25
Pin, Hitch, .500d X 6.00l, Pl, 3-36, 3-37
Pin, Hppr, Lift, 2-93
Pin, Joint, 5-27
Pin, Joint, Inj [Ku], 6-25
Pin, Lift, Hppr, 2-93, 2-95
Pin, Lock, Cab, 3-27
Pin, Locking, Steering, Tilt [S30], 2-37
Pin, Pipe, 5-3
Pin, Piston, 5-17
Pin, Piston [Ku], 6-17
Pin, Pivot, 0.75d 02.1l, Int 0.33b, 2-77
Pin, Roll, .125d X 1.25l, .125/.129, 2-111, 3-11
Pin, Spring, 5-29
Pin, Spring [Ku], 6-12, 6-27
Pin, Start Spring, 5-3
Pin, Start, Spring, 6-3
Pin, Straight, 5-3
Pin, Straight [Ku], 6-3
Pin, Tappet [Ku], 6-25
Pin, Tappet Guide, 5-27
Pin, Valve, Steering, 4-5
Pipe, Breather [Ku], 5-11, 6-11
Pipe, Clip [Ku], 6-20
Pipe, Drain, 5-21
Pipe, Fuel, Overflow [Ku], 6-20
Pipe, Injection 1, 5-23
Pipe, Injection 2, 5-23
Pipe, Injection 3, 5-23
Pipe, Injection 4, 5-23
Pipe, Injector, # 4, 6-20
Pipe, Over Flow, 5-23
Pipe, Overflow, 6-20
Pipe, Water, 5-10, 6-10
Pipe, Water [Kubota], 5-8, 6-8
Pipe, Water Return 1, 5-31
Pipe, Water Return 2, 5-31
Pipe, Water, Return, 6-29
Piston, 5-17
Piston 05, 5-17
Piston, Eng [Ku], 6-17
Piston, Pump, Hyd, Gear, 4-13, 4-15
Piston, Ring Assy [Ku], 6-17
Piston, Servo, 4-21
Pivot Wldt, Brush, Side, 2-107, 2-111, 3-11
Pivot, Adj, Brush, 2-105
Plate, 2-95, 5-27, 6-25
Plate Wldt, Brush, Adj, 2-113, 2-115
Plate Wldt, Lower, 2-103
Plate Wldt, Perma-Filter, 2-81, 2-83
Plate Wldt, Pump, 2-79
Plate Wldt, Sppt, Hppr, Lh, 2-93
Plate Wldt, Sppt, Hppr, Rh, 2-93
Plate Wldt, Stop [S30], 2-113
Plate, Adj, Brush, 2-105
Plate, Attmnt, Cover, 2-13
Plate, Brush, Adj, 2-115
Plate, Cntrl, Spd [Ku], 6-27
Plate, Cover, 2-101, 4-17, 4-19
Plate, Cover En, 4-21
Plate, Filler, 2-57
Plate, Filler, A/C, 3-31
Plate, Guide, 2-103
Plate, Hinge, 2-89
Plate, Idler, 3-31
Plate, Lift, Brush, 2-105
Plate, Lift, Upper, 2-105
Plate, Lock Plate, 2-66
Plate, Motor, Wiper, Cab, 3-23
Plate, Mtg, 2-117
Plate, Mtg, Cntrl, Eng, 2-43
Plate, Mtg, Steer-Control, 2-35
Plate, Mtg, Vacfan, 2-101
Plate, Prop, Rod, 2-25
Plate, Retainer, Door, Dump, 1-1, 2-85, 2-87
Plate, Retainer, Leaf Spring, 2-65
Plate, Ring, Headlight, Lh, 2-91
Plate, Ring, Headlight, Rh, 2-91
Plate, Ring, Light, 2-91
Plate, Seal, Retainer, 1-1, 2-85, 2-87
Plate, Spacer, Motor, Hyd, 4-2, 4-3
Plate, Sppt, Hppr, 2-95
Plate, Sppt, Hppr Bottom, 2-81
Plate, Spring, U Bolt, Lower, 2-65
Plate, Spring, U Bolt, Upper, 2-65
Plate, Stop, Parking, 2-73
Plate, Valve, Motor, Hyd, 4-13, 4-15
Plate, Valve, Pump, Hyd, 4-17, 4-19
Plate, Vent, 3-25
Plate, Wear, Steering Valve, 4-5
Plate, Wheel, Ce, 2-71
Plate,Lift,Premium, 2-111
Plug, 4-13, 4-15, 4-25, 5-3, 5-5, 5-7, 5-31
Plug #8, 4-21
Plug Assy [Cl], 4-5
Plug En, 4-23
Plug S/A En, 4-21
Plug Wldt, Drive, Brush, 2-117
Plug Wldt, Idler, Brush, 2-117
Plug, Cup, Sealing [Ku], 6-3, 6-5
Plug, Drain, 5-4
Plug, Eng [Ku], 6-3
Plug, Expansion, 5-3
Plug, Gauge, Oil [Ku], 6-4
Plug, Glow, 5-23
Plug, Hole, Rnd, 0.25h 0.43l, Brb, Nyl, 2-91
Plug, Hole, Rnd, 0.25h 0.8l, Brb, Nyl, 2-93, 2-95
Plug, Hole, Rnd, 0.30h 0.3l, 3-23
Plug, Hole, Rnd, 0.38h .03-.12, Blk Nyl, 2-115
Plug, Hole, Rnd, 0.44h .03-.12, Blk Nyl, 2-113
Plug, Hole, Rnd, 1.25h .03-.12, Blk Nyl, 3-15
Plug, Hole, Rt, Rocker Switch, .87 X 1.7, 2-31, 2-33
Plug, Oil Filler, 5-10
Plug, Orifice, Valve, Hyd, .035, 4-9
Plug, Orifice, Valve, Hyd, .040, 4-7, 4-9
Plug, Orifice, Valve, Hyd, .046, 4-7, 4-9
Plug, Pump, Hyd, Gear, 4-13, 4-15
Plug,#12 O-Ring Ph, 4-21
Plunger, Pump, 5-27
Plunger, Pump, Inj [Ku], 6-25
Poppet En, 4-23
Poppet, Pump, Hyd, Gear, 4-13, 4-15
Pulley Assy, Cable, 2.8d 0.50b, 2-113
Pulley, Cable, 1.5d Nyl, 2-69, 2-71, 2-105
Pulley, Cable, 3.1d 2.30b, .19d Cable, 2-105
Pully, Fan, 5-8
Pump Assy, Water, 12vdc, 3-29
Pump, Fuel, 2-45

Pump, Hyd, Gear, Ext, 3, 00.70 2500, Cw, 2-141, 2-143
Pump, Hyd, Piston, [V] 1.44 [R] 4000, 4-17
Pump, Hyd, Piston, Var, 1.24 4500, Cw, 4-19
Pump, Hyd, Piston, Var, 1.24 4500, Cw (See Breakdowns), 2-141
Pump, Hyd, Piston, Var, 2.48 4500, Cw (See Breakdowns), 2-143
Pump, Info, Repair, 2-141, 2-143
Pump, Injection [Kubo], 6-23, 6-25
Pump, Oil, Eng [Ku], 6-7
Pump, Oil, Pickup [Sump, Ku], 5-4
Pump, Water Assy [Ku], 6-8
Push Rod, 5-15

R

Race, Bearing Ce, 4-21
Race, Bearing, Pump, Hyd, 4-17, 4-19
Race, Thrust, Motor, Hyd, 4-2, 4-3
Rack, Control, 5-27
Radiator [Cross-Flow], 2-57
Radiator, W/ Hyd Cooler [Side X Side], 2-59
Relay Assy, 12vdc [2f/1r], 3-29
Relay, 12vdc, 040a, Spdt No, 2-43
Relay, 12vdc, 040a, Spdt No (CE Only), 2-31, 2-33
Relay, 12vdc, 070a, Spst No [Potter], 2-43
Relay, 12vdc, 35a, Spdt [Micro 280], 2-31, 2-33
Relief Valve Sa En, 4-23
Repair Info,Pmp En, 4-23
Reservoir, Hyd, W/ Label, Replmt, 2-135
Resistor, 022.00ohm, 0040watt, 2-43
Retainer, 5-21, 6-19
Retainer, Blade, Deflector, 2-7
Retainer, Boot, Steering Column, 2-37
Retainer, Gear, Starter [Ku], 6-19
Retainer, Motor, 2-103
Retainer, Motor, Hyd, 4-13, 4-15
Retainer, Pulley, 2-105
Retainer, Shaft, 0.12id .38od X .052, 3-27
Retainer, Skirt, 2-83
Retainer, Skirt, .12, 1.5w X 14.4l, Blk, 2-9, 2-11
Retainer, Spring [Ku], 6-12
Retainer, Spring, Valve [Ku], 6-12
Retainer, Stop, 2-115
Retainer, Valve Spring, 5-12
Rim Assy, 08.0 X 3.8, 4.5bc /5bolt, 2-66
Rim Assy, 09.0 X 4.0, 4.5bc /5bolt, 2-71
Ring [Ku], 6-17
Ring, Motor, Hyd, 4-13, 4-15
Ring, Piston Assy [Ku], 6-17
Ring, Retainer, Steering Valve, 4-5
Ring, Retaining, 4-17, 4-19, 4-25
Ring, Retaining En, 4-23
Ring, Retaining, Ext, 0.50d, Hd, 2-37
Ring, Retaining, Ext, 0.50d, Ss, 2-105
Ring, Retaining, Ext, 1.50d, Hd, 2-93, 2-95
Ring, Retaining, Int, 2.00d, 2-93, 2-95
Ring, Retaining, Pump, Hyd, 4-17, 4-19
Ring, Snap [Ku], 6-13, 6-15
Ring, Snap, Piston [Ku], 6-17
Rivet, Blind, .125d X 0.32 X .25d, Alm, 2-17
Rivet, Blind, .125d X 0.32 X .25d, Stl, 2-57
Rivet, Plstc, .250d X 0.90, 2-7, 2-19, 2-21, 2-37, 2-43, 2-59, 2-83
Rivet, Plstc, .325d X 0.79, 2-7
Rod Assy, Connecting [Ku], 6-17
Rod Wldt, Brake, 2-73
Rod Wldt, Safety, Hppr Cover, 2-99
Rod-End, M6 X 1.0rh Fem 6mmb [Nylon], 2-75, 2-77, 2-79
Rod-End, 0.75-16lh Fem 0.75b Zerk, 2-63
Rod-End, 0.75-16rh Fem 0.75b Zerk, 2-61, 2-63
Rod-End, 0.75-16rh Mal 0.75b [Teflon], 2-61
Rod, Handle, Cab, 3-27
Rod, Hanger, Isolator, 2-51, 2-53
Rod, Latch, Cab, 3-27
Rod, Push [Ku], 6-21
Rod, Push, Valve [Ku], 6-15
Rod, Thrd, 2 End, M10 X 1.5 04.6l, 2-99
Rod, Thrd, M10x1.5 80l, 2-111, 3-11
Rod, Tie, 4 Wheel, 2-63
Roll Pin En, 4-23
Roller, 5-21
Rotating Kit, 4-21

S

Screw, 5-7, 5-23, 5-27
Screw, Adj, Rocker Arm [Ku], 6-12
Screw, Adj, Stop [Ku], 6-26
Screw, Adjusting, 5-12
Screw, Btn, M8 X 1.25 X 40, Ss, 2-105
Screw, Cap, 4-17, 4-19, 4-21
Screw, Cap En, 4-21, 4-23
Screw, Cap, Motor, Hyd, 4-3, 4-13, 4-15
Screw, Cap, Pump, Hyd, 4-17, 4-19
Screw, Flt [Ku], 6-7
Screw, Flt, Soc, .75-10 X 2.50, Al, 2-117
Screw, Flt, Soc, M5 X 0.80 X 16, 10.9, 2-117
Screw, Flt, Soc, M8 X 1.25 X 25, 10.9, 2-115
Screw, Follow, 5-27
Screw, Hex [Ku], 6-4, 6-5, 6-7, 6-11, 6-23, 6-25, 6-28
Screw, Hex, .31-09 X 1.25, Wood, 2-107, 2-109, 3-11
Screw, Hex, .31-18 X 1.25, G5, 2-49
Screw, Hex, .31-18 X 1.50, G5, 3-31
Screw, Hex, .38-16 X 0.75, Nl, 2-117
Screw, Hex, .38-16 X 1.25, G5, 2-77, 2-141
Screw, Hex, .38-16 X 1.25, Nl, 2-107, 2-109, 3-11
Screw, Hex, .38-16 X 3.00, G5, 2-49
Screw, Hex, .75-10 X 2.50, Fl, 2-117
Screw, Hex, .75-10 X 3.00, G5, 2-63
Screw, Hex, .75-10 X 3.25, G5, 2-61
Screw, Hex, 10-24 X 0.50, Ss, 2-49
Screw, Hex, Case, Brg, Main [Ku], 6-9
Screw, Hex, Cshft [Ku], 6-17
Screw, Hex, Flywheel [Ku], 6-18
Screw, Hex, Head, Cyl [Ku], 6-5
Screw, Hex, M10 X 1.25 X 20, 8.8, 2-39, 2-49
Screw, Hex, M10 X 1.25 X 25, 8.8, 2-39
Screw, Hex, M10 X 1.5 X 130, 8.8, 3-17
Screw, Hex, M10 X 1.5 X 25, 8.8, 3-19, 3-21
Screw, Hex, M10 X 1.5 X 35, 9.8, Sems, 3-36, 3-37
Screw, Hex, M10 X 1.5 X 60, 8.8, 2-111
Screw, Hex, M10 X 1.5 X 80, 8.8, 3-11
Screw, Hex, M10 X 1.50 X 100, 8.8, 2-39
Screw, Hex, M10 X 1.50 X 110, 8.8, 2-39, 3-31
Screw, Hex, M10 X 1.50 X 120, 8.8, Fl, 2-39
Screw, Hex, M10 X 1.50 X 16, 8.8, 2-99
Screw, Hex, M10 X 1.50 X 20, 8.8, 2-37
Screw, Hex, M10 X 1.50 X 25, 10.9, 2-9, 2-11, 2-66, 2-71
Screw, Hex, M10 X 1.50 X 25, 8.8, 2-39, 2-49, 2-65, 2-103
Screw, Hex, M10 X 1.50 X 30, 8.8, 2-39
Screw, Hex, M10 X 1.50 X 35, 8.8, 2-39, 2-77
Screw, Hex, M10 X 1.50 X 35, 9.8, Sems, 2-13, 2-15, 2-63, 2-65, 2-103, 2-105, 2-113, 2-115, 3-19, 3-21, 3-23, 3-31
Screw, Hex, M10 X 1.50 X 40, 8.8, 2-39, 2-101, 2-103, 2-145, 2-147, 3-31
Screw, Hex, M10 X 1.50 X 45, 8.8, 2-57, 2-59, 2-87, 2-115
Screw, Hex, M10 X 1.50 X 50, 8.8, 2-7, 2-53, 2-85, 2-97
Screw, Hex, M10 X 1.50 X 60, 8.8, 2-39
Screw, Hex, M10 X 1.50 X 80, 8.8, 2-107
Screw, Hex, M10 X 1.50 X 90, 8.8, 2-97
Screw, Hex, M12 X 1.75 X 140, 8.8, 2-65
Screw, Hex, M12 X 1.75 X 40, 10.9, 2-93, 2-95
Screw, Hex, M12 X 1.75 X 40, 8.8, 2-69, 2-71, 2-143
Screw, Hex, M12 X 1.75 X 50, 8.8, 2-95
Screw, Hex, M12 X 1.75 X 80, 8.8, 2-65
Screw, Hex, M12 X 1.75 X 90, 8.8, 2-117
Screw, Hex, M14 X 2.00 X 90, 8.8, 2-65
Screw, Hex, M16 X 2.00 X 20, 8.8, 2-117
Screw, Hex, M4 X 0.70 X 10, Fmg, Blk, 2-113, 2-115
Screw, Hex, M4 X 0.70 X 20, Ss, 2-73
Screw, Hex, M5 X 0.80 X 16, 8.8, 2-113, 3-7, 3-9, 3-38

Screw, Hex, M5 X 0.80 X 16, Fmg, 3-31
Screw, Hex, M5 X 0.80 X 20, 8.8, 2-93, 2-95
Screw, Hex, M6 X 1.0 X 16, 8.8, 3-15, 3-17
Screw, Hex, M6 X 1.0 X 20, 9.8, Sems, 2-45, 2-51, 2-53, 2-57, 2-81, 2-83, 2-85, 2-87, 2-113
Screw, Hex, M6 X 1.00 X 10, 8.8, 2-57
Screw, Hex, M6 X 1.00 X 10, Fmg, 2-85, 2-93, 2-95, 2-135
Screw, Hex, M6 X 1.00 X 12, Nl, Ss, 1-1, 2-81
Screw, Hex, M6 X 1.00 X 16, 8.8, 2-99, 3-15
Screw, Hex, M6 X 1.00 X 16, Fmg, 2-87, 2-103
Screw, Hex, M6 X 1.00 X 20, 8.8, 2-101, 3-31
Screw, Hex, M6 X 1.00 X 20, 9.8, Sems, 2-37, 2-43, 2-59, 2-115, 3-15, 3-23
Screw, Hex, M6 X 1.00 X 20, Nl, Ss, 2-117
Screw, Hex, M6 X 1.00 X 20, Ss, 3-3, 3-5, 3-7, 3-9
Screw, Hex, M6 X 1.00 X 25, 8.8, 2-79, 2-141, 2-143
Screw, Hex, M6 X 1.00 X 25, 9.8 Sems, 2-9, 2-11, 2-13, 2-40, 2-45, 2-49, 2-57, 2-59
Screw, Hex, M6 X 1.00 X 25, 9.8, Sems, 2-15, 2-21, 2-25, 2-29, 3-5, 3-9
Screw, Hex, M6 X 1.00 X 25, Fmg, 2-85, 2-87, 3-29
Screw, Hex, M6 X 1.00 X 25, Ss, 2-75
Screw, Hex, M6 X 1.00 X 30, 8.8, 2-63, 2-77
Screw, Hex, M6 X 1.00 X 30, 9.8, Sems, 1-1, 2-9, 2-11, 2-45, 2-85, 2-87
Screw, Hex, M6 X 1.00 X 35, Ss, 2-117
Screw, Hex, M6 X 1.00 X 70, Ss, 2-79
Screw, Hex, M8 X 1.25 X 16, 8.8, 2-15, 2-21, 2-25, 2-29, 2-39, 2-101, 2-141, 3-23
Screw, Hex, M8 X 1.25 X 16, Ss, 2-87, 2-91
Screw, Hex, M8 X 1.25 X 20, 8.8, 2-101, 2-103, 2-117, 3-15, 3-17, 3-31
Screw, Hex, M8 X 1.25 X 20, Fmg, 3-15, 3-17, 3-38
Screw, Hex, M8 X 1.25 X 20, Ss, 2-61, 3-23
Screw, Hex, M8 X 1.25 X 20, Ss, Sems, 3-15, 3-17
Screw, Hex, M8 X 1.25 X 25, 8.8, 2-25, 2-49, 2-57, 2-59, 2-63, 2-73, 2-101, 3-23
Screw, Hex, M8 X 1.25 X 25, 9.8, Sems, 2-7, 2-13, 2-15, 2-17, 2-19, 2-21, 2-23, 2-25, 2-27, 2-43, 2-45, 2-49, 2-51, 2-53, 2-57, 2-59, 2-75, 2-81, 2-83, 2-91, 2-107, 2-109, 2-113, 2-135, 2-137, 3-23, 3-33
Screw, Hex, M8 X 1.25 X 25, Ss, 2-9, 2-11, 2-75, 2-85, 2-87, 2-117
Screw, Hex, M8 X 1.25 X 30, 8.8, 2-9, 2-11, 2-39, 2-57, 2-75, 2-77, 2-103, 2-105, 2-111, 3-11
Screw, Hex, M8 X 1.25 X 30, 9.8, Sems, 2-27, 2-39, 2-47, 2-57, 2-71, 2-85, 2-89, 2-105, 2-111, 2-113, 2-135, 3-31
Screw, Hex, M8 X 1.25 X 30, Ss, 2-61, 2-85
Screw, Hex, M8 X 1.25 X 35, 8.8, 2-25, 2-73, 2-115, 3-31
Screw, Hex, M8 X 1.25 X 35, 9.8, Sems, 2-7, 2-47, 2-59, 2-69, 2-71, 2-93, 2-95, 2-107, 2-113
Screw, Hex, M8 X 1.25 X 35, Nl, Ss, 2-105
Screw, Hex, M8 X 1.25 X 40, 8.8, 2-49, 2-105
Screw, Hex, M8 X 1.25 X 50, 8.8, 2-51, 2-53, 2-105
Screw, Hex, M8 X 1.25 X 60, 8.8, Fl, 2-73
Screw, Hex, M8 X 1.25 X 70, 8.8, 2-93, 2-95, 2-149
Screw, Hex, W/ Washer [Ku], 6-10
Screw, Motor, Hyd, 4-2, 4-3
Screw, Pan, 5-10
Screw, Pan, 12-16 X 0.50, F/ Plstc, 2-21, 3-38
Screw, Pan, 12-16 X 0.75, F/ Plstc, 2-91
Screw, Pan, M5 X 0.8 X 12, Ss, 3-17
Screw, Pan, M5 X 0.80 X 16, 4.8, 3-17, 3-39
Screw, Pan, M5 X 0.80 X 25, 4.8, 3-15
Screw, Pan, M6 X 1.00 X 20, 4.8, 3-15, 3-17
Screw, Pan, M8 X 1.25 X 25, Blk, 2-105
Screw, Pan, Phl, .31-18 X 0.75, G2, 2-17
Screw, Pan, Phl, .31-18 X 1.00, G2, 2-17
Screw, Pan, Phl, 08-16 X 1.00, F/ Plstc, 2-25
Screw, Pan, Phl, 10-14 X 0.75, F/ Plstc, 2-81
Screw, Pan, Phl, 10-32 X 0.50, G2, Blk, 2-31, 2-33
Screw, Pan, Phl, M3 X 0.50 X 12, Blk, 3-25
Screw, Pan, Phl, M4 X 0.70 X 10, 4.8, 2-35
Screw, Pan, Phl, M4 X 0.70 X 10, Blk, 3-25
Screw, Pan, Phl, M4 X 0.70 X 10, Ss, 2-91
Screw, Pan, Phl, M4 X 0.70 X 16, 4.8, 2-19, 2-21, 2-89, 2-91
Screw, Pan, Phl, M4 X 0.70 X 16, Ss, 2-83, 2-101
Screw, Pan, Phl, M4 X 0.70 X 20, 4.8, 2-17
Screw, Pan, Phl, M4 X 0.70 X 20, Blk, 3-23
Screw, Pan, Phl, M4 X 0.70 X 25, Blk, 3-25
Screw, Pan, Phl, M4 X 0.70 X 60, 4.8, 2-7
Screw, Pan, Phl, M5 X 0.80 X 10, 4.8, 3-15
Screw, Pan, Phl, M5 X 0.80 X 12, Ss, 2-15
Screw, Pan, Phl, M5 X 0.80 X 16, 4.8, 2-17, 2-43, 3-3, 3-5, 3-7, 3-9
Screw, Pan, Phl, M5 X 0.80 X 16, Blk, 2-31, 2-33, 2-105
Screw, Pan, Phl, M5 X 0.80 X 20, 4.8, 2-43, 3-15, 3-17
Screw, Pan, Phl, M5 X 0.80 X 25, 4.8, 3-3, 3-5, 3-7, 3-9
Screw, Pan, Phl, M5 X 0.80 X 25, Blk, 3-25
Screw, Pan, Phl, M5 X 0.80 X 40, 4.8, 2-43, 3-3, 3-5, 3-7, 3-9
Screw, Pan, Phl, M5 X 0.80 X 50, 4.8, 3-29
Screw, Pan, Phl, M6 X 1.0 X 16, Blk, 3-27
Screw, Pan, Phl, M6 X 1.0 X 35, Blk, 3-27
Screw, Pan, Phl, M6 X 1.00 X 12, Blk, 2-17, 3-33
Screw, Pan, Phl, M6 X 1.00 X 12, Nl, Pl, 3-27
Screw, Pan, Phl, M6 X 1.00 X 16, 4.8, 3-3, 3-5, 3-7, 3-9
Screw, Pan, Phl, M8 X 1.25 X 16, Blk, 3-27
Screw, Pan, Phl, M8 X 1.25 X 25, Blk, 3-25
Screw, Pan, Phl, M8 X 1.25 X 50, Blk, 3-25
Screw, Pump, Injection [Ku], 6-25
Screw, Rod, Connecting [Ku], 6-17
Screw, Set, 4-25, 5-12, 5-13, 5-15
Screw, Set [Ku], 6-13, 6-15
Screw, Set, Soc, 10-24 X 0.25, Nl, 2-103
Screw, Soc, .31-24 X 1.00, Al, 2-77
Screw, Soc, .38-16 X 1.50, Al, 2-141, 2-143
Screw, Soc, .38-16 X 2.00, Al, 2-79
Screw, Soc, .50-13 X 1.50, Al, 2-61, 2-63
Screw, Soc, M10 X 1.50 X 16, 12.9, 2-31, 2-33
Screw, Soc, M10 X 1.50 X 25, 12.9, 2-35
Screw, Soc, M10 X 1.50 X 50, 12.9, 2-149
Screw, Soc, M16 X 2.00 X 50, 12.9, 2-61, 2-65
Screw, Soc, M6 X 1.00 X 16, 12.9, 2-43
Screw, Soc, M6 X 1.00 X 20, 12.9, Nl, 2-117
Screw, Soc, M8 X 1.25 X 16, 12.9, 2-35
Screw, Valve, Steering, 4-5
Screw, W / Washer, 6-20
Screw, With Washer, 5-23
Seal Assy, Pre-Filter, 2-99
Seal Kit, 2-61, 2-93, 2-95, 2-141, 2-143
Seal Kit, Cartridge, 4-7, 4-9, 4-26
Seal Kit, Motor, 2-101
Seal Kit, Pump En, 4-21, 4-23
Seal Kit, Scu, 2-35, 2-37
Seal Kit, Steering [Cl], 4-5
Seal Kit, Vacuum Hsng, Replmt, 2-101

Seal Kit,Cntrl, 4-25
Seal, Afmkt, Bulb, 90, 0.50d, 03ft, 3-25
Seal, Afmkt, Bulb, 90, 0.75d F/11ga 01ft, 2-21
Seal, Afmkt, Bulb, 90, 0.75d F/11ga 02ft, 2-15, 2-21
Seal, Afmkt, Bulb, 90, 0.75d F/11ga 03ft, 3-25
Seal, Afmkt, Bulb, 90, 0.75d F/11ga 08ft, 2-21, 2-25
Seal, Afmkt, Bulb, Adh 0.38, 0.75w 02ft, 2-59
Seal, Afmkt, Bulb, Str, .50d F/11ga 02ft, 2-21, 2-59
Seal, Afmkt, Bulb, Str, .50d F/11ga 03ft, 2-17
Seal, Afmkt, Bulb, Str, .75d F/07ga 03ft, 3-23
Seal, Afmkt, Bulb, Str, 0.76, 0.93w 01ft, 2-21
Seal, Afmkt, Bulb, Str, 0.76, 0.93w 02ft, 2-25
Seal, Afmkt, Bulb, Str, 0.76, 0.93w 20ft, 3-27
Seal, Afmkt, Foam, 1.18 X 1.18, 01ft, 3-23
Seal, Afmkt, Foam, 1.18 X 1.18, 03ft, 3-23, 3-25
Seal, Afmkt, Rbr, Clsd, Adh, 02ft, 2-9, 2-11, 2-103
Seal, Afmkt, Rbr, Clsd, Adh, 05f, 2-103
Seal, Afmkt, Rbr, Clsd, Adh, 08ft, 2-13, 2-15
Seal, Afmkt, Rbr, Open, Adh, 01ft, 2-27
Seal, Afmkt, Rbr, Open, Adh, 03ft, 2-19
Seal, Afmkt, Rbr, Wndw, 08ft, 3-27
Seal, Afmkt, Rbr, Wndw, 10ft, 3-23
Seal, Afmkt, Rbr, Wndw, 10ft [Zipper], 3-23
Seal, Afmkt, Ure, Adh, 0.38, 0.38w 02ft, 2-59
Seal, Cavity, Grease, 4 Wheel, 2-63
Seal, Celr Rbr, .25, 06.0w 06.0l, Adh, 3-15
Seal, Chute, Dust, 2-101
Seal, Door, Dump, 1-1, 2-85, 2-87
Seal, Drive, Rear, Grease Cav, 2-61
Seal, Foam, .50 7.47w 15.47l, Ure, Adh, 2-81, 2-83
Seal, Foam, .50, 1.00w 72.00l, Adh, 3-23
Seal, Heat, 5-23
Seal, Heat [Ku], 6-20
Seal, Hppr, 2-81, 2-83
Seal, Inlet, Pre-Filter, 2-81, 2-83
Seal, Lip, 8.86id, 2-103
Seal, Mechanical Assy [Ku], 6-8
Seal, Oil, 5-7, 5-9, 5-29
Seal, Oil [Ku], 6-27
Seal, Oil, Front [Ku], 6-7
Seal, Oil, Rear [Ku], 6-9
Seal, Org, 5-10, 6-7, 6-10, 6-19
Seal, Org [Ku], 6-4, 6-7, 6-25
Seal, Org, .064 X 00.30id #03, 2-45
Seal, Org, .069 X 03.06id, 2-141, 2-143
Seal, Org, .072 X 00.35id #04, 4-7, 4-9
Seal, Org, .078 X 00.47id #06, 4-7, 4-9
Seal, Org, .078 X 00.47id 06, 4-26
Seal, Org, .087 X 00.64id #08, 4-7, 4-9
Seal, Perma-Filter, 2-81, 2-83
Seal, Pre-Filter, 2-99
Seal, Pre-Filter [Midsize], 2-99
Seal, Rbr, .13, 9.06w 9.84l, Red, 2-101
Seal, Rbr, Clsd, 1.00, Door, Brush, Lh, 2-11
Seal, Rbr, Clsd, 1.00, Door, Brush, Rh, 2-9
Seal, Rbr, Clsd, 2.00w 09.8l Lh, 2-11
Seal, Rbr, Clsd, 2.00w 09.8l Rh, 2-9
Seal, Rbr, Open, 0.12, 0.25w 27.4l Adh, 2-57
Seal, Stem, Valve [Ku], 6-12
Seal, Trim, Bulb, 90 Degree, 2-13, 2-15
Seal, Valve Stem, 5-12
Seal, Wiper, Door, 1-1, 2-85, 2-87
Seat Kit, Std, Replmt (S30 Only), 2-17
Seat, Deluxe [S30] (S30XP Only) (See Breakdowns), 2-17
Seat, Spring Lower, 5-27
Seat, Spring Upper, 5-27
Seat, Spring, Lower, Injector [Ku], 6-25
Seat, Spring, Upper, Injector [Ku], 6-25
Seat, Std [Michigan, Model V-2505] (S30 Only), 2-17
Seat, Std [Milsco] (S30 Only), 2-17
Seat, Suspension, W/1 Arm & Seatbelt (S30XP Only), 2-17
Seat, Valve, 5-7
Seatbelt, Retractable [Deluxe Seat], 2-17
Send-Unit, Fuel, 2-45
Send-Unit, Water, Temp,04npt[113oh/195d], 2-135
Shaft, 2-69
Shaft, Drive Sp En, 4-21
Shaft, Fork Lever, 5-30
Shaft, Governor [Ku], 6-13
Shaft, Governor Weight, 5-13
Shaft, Governor, Weight [Ku], 6-13
Shaft, Govnr, 6-13
Shaft, Govnr [Ku], 6-13
Shaft, Idle Gear 1, 5-15
Shaft, Idler, Gear [Ku], 6-15
Shaft, Idler, Plug, Brush, 2-117
Shaft, Input, 4-25
Shaft, Lever, Spd [Ku], 6-27
Shaft, Motor, Hyd, 4-13, 4-15
Shaft, Output, Motor, Hyd, 4-2, 4-3
Shaft, Rocker, Arm [Ku], 6-12
Shaft, Stop Lever, 5-29
Sheave, 01grv, 04.1pd 1.6b [Xl], 3-31
Sheave, 01grv, Rwk 393400 [3v], 3-31
Sheave, Cshft [Ku], 6-17
Sheave, Fan [Ku], 6-8
Sheave, Flat, 2.6d 0.62w 0.38b, 3-31
Shield, Breather, 5-10, 6-10
Shield, Heat, 2-57
Shield, Heat, W/ Label, DSL, Replmt, 2-51, 2-53
Shield, Heat, Tank [Gm 2010], 2-57
Shield, Heat, W/Label, Dsl, Replmt, 2-51, 2-53
Shim, 5-27, 6-23
Shim, Injection Pump 0.20 mm, 5-25
Shim, Injection Pump 0.25 mm, 5-25
Shim, Injection Pump 0.30 mm, 5-25
Shim, Pump, Injection, 6-23
Shim, Tappet, Injection [Ku], 6-25
Shims En, 4-23
Shock Absorber, 2.3 Strk, 2-77, 2-79
Shoe Assy, Brake, 177.8 X 45, 2-71
Shoe Set, Brake [1 Set=1pkg=2 Shoes], 2-69
Shroud Kit, Fan, Afmkt, 2-57
Shroud Wldt, Radiator, 2-57
Shroud Wldt, Station, Oprtr, 2-13, 2-15
Shroud, Cooling, 2-57
Shroud, Fan, 2-57, 2-59
Side Brush Kit, Lh, Ci [S30], 3-11
Skirt Kit, Door, Hppr, Maint [S30], 1-1, 2-85, 2-87
Skirt Kit, Hppr Maint [S30], 1-1
Skirt Kit, Hppr, Maint [S30], 2-81
Skirt Kit, Side / Rear [S30], 1-1, 2-7, 2-9, 2-11
Skirt, A/C, 3-31
Skirt, Deflector, 2-9, 2-11, 2-83
Skirt, Deflector Wheel Pocket Skirt, 1-1
Skirt, Door, Brush, 1-1, 2-9, 2-11
Skirt, Hppr, 1-1, 2-81
Skirt, Lip, 1-1, 2-81, 2-83
Skirt, Lip, Hppr, 1-1, 2-81
Skirt, Lip, Hppr, Stl, 2-83
Skirt, Neo, .06, 20.00w 20.00l (S30 and XP only), 2-57
Skirt, Neo, .06, 20.00w 20.00l (S30 X4 only), 2-57
Skirt, Neo, .06, 30.00w 41.00l [3 Wheel] (S30 and XP only), 2-59
Skirt, Neo, .06, 30.00w 41.00l [4 Wheel] (S30 X4 only), 2-59
Skirt, Neo, .12, 06.65w 18.50l, 03/ Sl, 1-1, 2-81
Skirt, Neo, .18, 06.74w 49.00l, 04/ Sl Rear Skirt, 1-1
Skirt, Neo, .18, 06.74w 50.00l, 04/ Sl, 1-1, 2-7
Skirt, Neo, .37, 06.00w 44.65l, 04/ Sl, 2-7
Skirt, Neo, .37, 06.00w 44.65l, 04/ Sl Recirculation, 1-1
Skirt, Rbr, 2-7
Skirt, Rbr, .12, 10.66w 43.00l, 10/ Sl, 2-7
Sleeve, 0.31b 0.50d 0.3l, Ss, 2-105
Sleeve, Cntrl, Pump, Injection [Ku], 6-25
Sleeve, Control, 5-27
Sleeve, Crankshaft, 5-17
Sleeve, Dashpo, Pump, Hyd, Gear, 4-13, 4-15
Sleeve, Governor, 5-13
Sleeve, Govnr [Ku], 6-13
Sleeve, Nyl, #27 20.0l, 2-117
Sleeve, Nyl, 2.38id 05.0l, 2-61

Sleeve, P/M, 0.21b 0.32d 0.4l, Stl Pl, 3-15, 3-17
Sleeve, P/M, 0.25b 0.38d 0.2l [430ss], 2-81, 2-83
Sleeve, P/M, 0.31b 0.50d 0.5l [430ss], 2-69, 2-71, 2-105, 2-113, 2-115
Sleeve, P/M, 0.31b 0.50d 0.7l [430ss], 2-107, 2-111, 3-11
Sleeve, P/M, 0.31b 0.50d 1.3l [430ss], 2-51, 2-53
Sleeve, P/M, 0.33b 0.63d 0.4l, Ss / Oil, 2-105
Sleeve, P/M, 0.40b 0.63d 0.1l [430ss], 2-99
Solenoid, #10, 12vdc, 4-7, 4-9
Solenoid, #8, 12vdc, 4-7, 4-9
Spacer [Ku], 6-21
Spacer, 0.32d, 1.00d, 0.38l, Pl (CE Only), 2-17
Spacer, 0.33b 0.50d 0.15l, Pl, 2-77
Spacer, 0.35b, 1.50d, 0.25l, Pl, 2-63
Spacer, Coil, #8, 4-7, 4-9
Spacer, Fan, 2-49
Spacer, Hinge, 3-17
Spacer, Plstc, 0.18b 0.27d 0.27l, 3-23
Spacer, Plstc, 0.62b 0.75d 0.27l, 3-23
Spacer, Rnd, .38b .88d .38l, 2-17
Spacer, Sppt, 2-85
Spacer, Valve, Steering, 4-5
Spindle Wldt, Wheel, Front, Lh, 2-71
Spindle Wldt, Wheel, Front, Rh, 2-71
Spool, Pilot, Hyd, 4-7, 4-9
Spring, 2-69, 4-13, 4-15, 5-7, 5-21, 6-19
Spring Assy Kit, 2-7
Spring Assy, Centering,10lb, 75mm Travel, 2-79
Spring En, 4-23
Spring Kit, Scu [Cl], 4-5
Spring, Brush, 5-21, 6-19
Spring, Cmpr, 0.48od .04wir 03.5l, 2-81, 2-83
Spring, Cmpr, 0.72od .06wir 02.3l, 2-37, 2-111, 3-11
Spring, Cmpr, 0.97od .11wir 02.5l, 2-107, 2-111, 3-11
Spring, Cmpr, Plunger [Ku], 6-25
Spring, Cmpr, Relief [Ku], 6-7
Spring, Cmpr, Rocker [Ku], 6-12
Spring, Cmpr, Valve, Injector [Ku], 6-25
Spring, Cntr, 4-25
Spring, Delivery Valve, 5-27
Spring, Ext [Ku], 6-19
Spring, Extn, 0.50od 0.06wir 02.5l, 2-85, 2-87
Spring, Extn, 0.75od 0.09wir 02.5l, 2-73
Spring, Extn, 1.00od 0.12wir 05.0l, 2-77
Spring, Extn, 1.39od 0.15wir 09.0l, 2-115
Spring, Governor, 5-30
Spring, Governor [Ku], 6-28
Spring, Leaf, 21.5inch [Slipper], 2-65
Spring, Motor, Hyd, 4-13, 4-15
Spring, Plunger, 5-27
Spring, Return, 5-29
Spring, Rocker Arm, 5-12
Spring, Start, 5-30
Spring, Start [Ku], 6-28
Spring, Tens, Brake, 2-71
Spring, Tors [Ku], 6-27
Spring, Tors, 0.61id .18wir 02.0coil, 2-71
Spring, Tors, 0.75id .06wir 02.8coil, 2-73
Spring, Tors, 1.09id .11wir 03.0coil, 2-105
Spring, Valve, 5-12
Spring, Valve [Ku], 6-12
Spring,Retainer, 4-25
Starter, 12vdc [Kubota], 2-39, 6-19
Steer-Control, Hyd#10 04.5 4000 (S30 X4 Only), 2-35, 2-37
Steer-Control, Hyd05, 06.1 2030, 2-37, 4-5
Steer-Control, Hyd05, 06.1 2030 (See Breakdowns)
(S30 and S30 XP Only), 2-35
Steer-control, Info, Repair, 2-35, 2-37
Stem, Valve, Hyd [4w2p], 4-7, 4-9
Stop Wldt, Suspension, 4 Wheel, 2-65
Stopper, 5-13
Stopper, Cam [Ku], 6-15
Stopper, Camshaft, 5-15
Stopper, Fuel [Ku], 6-13
Strainer, Hyd, 010gpm 100mesh, 2-135
Strainer, Hyd, 025gpm 100mesh 03psi, 1-1, 2-135
Strap, Cap, Enclosure, 3-15, 3-17
Strap, Door, Cab, 3-27
Strap, Door, Dump, Side, 1-1, 2-85, 2-87
Strap, Main, Lip, 1-1, 2-81, 2-83
Strap, Pyp, 0.07 1.0w 18.5l, W/ Buckle, 3-15, 3-17
Strap, Rbr, 2-103
Strap, Static, W/Grommet, .19 1.1w 25.0l, 2-7
Strap, Tank, Fuel, 2-45
Strap, Tank, Hyd, 2-135
Strip, Backing, Hppr, 2-7
Strip, Seal, 2-19
Stud, 5-7, 5-11, 5-12, 5-25, 5-29, 5-31
Stud [Ku], 6-7, 6-11, 6-12, 6-23, 6-27
Stud, Ball, .39d .31-16, Gasspring, 2-19, 2-23
Stud, Strike, Cab, 3-27
Stud, Wheel, .50-20 X 1.50l, 0.297th, 2-63
Stud, Wheel, .50-20 X 1.50l, 0.370th, 2-61
Stud, Wheel, .50-20 X 1.88l, 0.560th, 2-71
Switch Assy, Press, No 02400psi, 2-145, 2-147
Switch Kit, Press, Replmt[S30], 2-101
Switch Kit, Replmt, Thermostat, Eng, 2-40
Switch, A/C [Binary], 3-31
Switch, Key, 4 Pos [Honeywell], 2-31, 2-33
Switch, Limit, 15a, Nc, 2-113, 3-7, 3-9
Switch, Magneto [Ku], 6-19
Switch, Press, 0006psi Dpdt, 2-40
Switch, Press, Hyd, 18-24psi, Spst, No (S30 XP and X4 Only), 2-135
Switch, Pressure, 12v, 2-101
Switch, Rocker, Dpdt, Mom / Off / Mom, 2-31
Switch, Rocker, Dpdt, On / Off / Mom, 2-31
Switch, Rocker, Dpst, On / None / On, 2-31
Switch, Rocker, Dpst, On / None / On (S30 Only), 3-15, 3-17
Switch, Rocker, Prgrsv, 2-31
Switch, Rocker, Prgrsv (Operating Lights), 2-31, 2-33
Switch, Seat, No [Delta 6440-04], 2-17
Switch, Snap, 15a Nc, Rlr, 2-105
Switch, Snap, 15a No, 3-3, 3-5, 3-7, 3-9
Switch, Snap, 15a No, Rlr, 2-93, 2-95
Switch, Thermal, 160deg, Spdt, 2-81, 2-83
Switch, Thermostat, Water, 2-40
Switch, Turn Signal, 3-7, 3-9

T

Taillight, 12vdc, 6.3 X 2.5, 2-7
Tank, Coolant, 03.30w 4.7hi 04.7l,1liter, 2-57
Tank, Coolant, 03.6w 04.1hi 05.5l,1liter, 2-57, 2-59
Tank, Fuel, 2-45
Tape, Warning, Left Blk/Yel [33 Mtr] (CE Only), 2-175
Tape, Warning, Rh, Blk / Yel [33 Mtr] (CE Only), 2-175
Tappet, 5-15
Tappet [Ku], 6-15
Tappet, Pump, Injection [Ku], 6-25
Thermostat, 180deg, 1.7d, 5-31
Thermostat, 180deg, 1.7d [Ku], 6-29
Thermostat, Heater/Air, 4-11
Tie, Cable, Nyl, 07.3l .19w 1.8 Max D, 2-45, 2-57, 2-59, 3-3, 3-5, 3-7, 3-9
Tie, Cable, Nyl, 11.4l .19w 3.0 Max D, 2-57, 2-89
Tie, Cable, Nyl, 14.5l .30w 4.0 Max D, 2-55, 2-107, 2-109
Timer, 12vdc, 10a [Ce Seat Switch] (CE Only), 2-31
Timer, 12vdc, 1a [10s Sgl Shot], 2-43
Timer, 12vdc, 30sec On, 2-31
Timer, 12vdc, 6sec Spcl [Tosr116], 2-31
Tire Assy, Foam-filled, 125/75-08 5bolt (Standard), 2-67
Tire Assy, Pneu, 21 X 6.0-12 4.5bc, Ce, 2-71
Tire Assy, Pneu, 5.00 4.5bc/5blt[R8ic70] Pneumatic Rear, 1-1
Tire Assy, Pneu, 570/500-08 4.5bc 5bolt (Standard), 2-66
Tire Assy, Pneu, 600x9 4.5bc/5bolt, Ce Pneumatic Front, 1-1

Tire Assy, Solid, 18.0 X 4.3 4.5bc 5bolt (Option), 2-66
Tire Assy, Solid, 18.0x4.3 4.5bc/5bolt Solid Rear Tire, 1-1
Tire Assy, Solid, 20.8 X 5.0, W/ Brg, 1-1, 2-69
Tire, Pneu, 21 X 6.0 X 9.0 12 Ply [Ic40], 2-71
Tire, Solid, 18.0 X 7.0 X 8.0[4.33 Sc15], 2-66
Tire, W/ Tube, W/ Flap, 2-66
Track, Slide, Seat Adj, 12.5l, 2-17
Track, Slide, Seat Adj, 12.5l, W/Latch, 2-17
Tread, Non-Skid, 02.2w 11.5l, 2-75
Tread, Non-Skid, 04.5w 10.0l, 2-13, 2-15
Tread, Non-Skid, 10.0w 12.0l, 2-13, 2-15
Tube Assy, Hyd, Cooler [Coyote], 2-137, 2-139
Tube Assy, Hyd, Fltr, 2-139
Tube Assy, Hyd, Fltr [Coyote], 2-137
Tube Assy, Hyd, Motor [Lh-Inner], 2-63
Tube Assy, Hyd, Motor [Lh-Outer], 2-63
Tube Assy, Hyd, Valve Tank [Coyote], 2-137, 2-139
Tube Kit, Exhaust, Repair, Dsl [S30], 2-51, 2-53
Tube Wldt, 2-117
Tube Wldt, Door, 3-17
Tube Wldt, Exhaust, Dsl [Roto Cover], 2-51, 2-53
Tube, 0.38id 0.5ood 00.6l, Ss, 2-103
Tube, 0.38id 0.75od 00.3l, Ss, 2-49
Tube, 0.41id, 0.73od, 00.88l, Stl, 2-103
Tube, 0.59id 1.25od 00.6l, Stl, 2-111, 3-11
Tube, 0.77id 1.75od 00.7l, Stl, Pntd, 2-61
Tube, Breather, 5-10, 6-10
Tube, Coolant, Lower, Dsl, 2-55
Tube, Coolant, Lower, Dsl [Roto-mold], 2-55
Tube, Drain, Starter, 6-19
Tube, Exhaust, Tailpipe, 3 Wheel, 2-51
Tube, Exhaust, Tailpipe, 4 Wheel, 2-53
Tube, Hose, 3-15, 3-17
Tube, Hyd [Pump Charge], 2-141
Tube, Hyd, Gear Pump Front [Coyote], 2-141, 2-143
Tube, Hyd, Gear Pump Front[S30 Mit2013], 2-141, 2-143
Tube, Hyd, Gear Pump Middle [Coyote], 2-141, 2-143
Tube, Hyd, Gear Pump Middle[S30 Mit2013], 2-141, 2-143
Tube, Hyd, Gear Pump Rear [Coyote], 2-141
Tube, Hyd, Pump, Drain, 2-141
Tube, Hyd, Pump, Rear Drive, Ff10/Fm10, 2-141
Tube, Hyd, Right Inside, 2-63
Tube, Hyd, Right Outside, 2-63
Tube, Hyd, Steering Drain, 2-137, 2-139
Tube, Injector, Pipe #1 [Ku], 6-20
Tube, Injector, Pipe #2 [Ku], 6-20
Tube, Injector, Pipe #32 [Ku], 6-20
Tube, Pin [Ku], 6-3
Tube, Plstc, 0.25id 0.31od 00.5l, Blk, 2-117
Tube, Seat, Valve, Oil [Ku], 6-7
Turnbuckle, Body, .38thread, 03.9l, 2-69

V

Valve Assy, Relief [Cl], 4-5
Valve Plate, 4-23
Valve Spool, 4-25
Valve, Breather, Complt, 5-10, 6-10
Valve, Check, 4-7, 4-9
Valve, Cntrl, Solenoid, 4-7, 4-9
Valve, Delivery, 5-27
Valve, Eng [Delivery, Ku], 6-25
Valve, Exhaust, 5-12
Valve, Exhaust [Ku], 6-12
Valve, Expansion, 4-11
Valve, Heater, 3-29
Valve, Hyd [Priority Ds05g1200], 2-149
Valve, Hyd, Flow Cntrl, 4-26
Valve, Hyd, Flow Divider, 4-26
Valve, Hyd, Flow Divider, Propel [4w], 4-26
Valve, Hyd, Flow Divider, Propel [4w] (See Breakdowns), 2-149
Valve, Hyd, Solenoid, 12vdc [06s], 4-7, 4-9
Valve, Hyd, Solenoid, 12vdc [06s] (See Breakdowns), 2-145
Valve, Hyd, Solenoid, 12vdc [08s] (See Breakdowns), 2-147
Valve, Inlet, 5-12
Valve, Intake [Ku], 6-12
Valve, Motor, Hyd, 4-13, 4-15
Valve, Relief, 4-7, 4-9
Valve, Relief, 3000psi, 4-17, 4-23
Valve, Relief, 3500psi, 4-19
Valve, Relief, Pump , 4-17, 4-19
Valve, Stem, No, 4-7, 4-9
Video, Oprtr, Dvd [S30 En Es Fr], 3-40

W

Wand, Vacuum, 3-15, 3-17
Washer, 4-17, 4-19, 4-21
Washer Flat,0.50,Sae, 2-37
Washer 1, 5-12
Washer 2, 5-12
Washer En, 4-21, 4-23
Washer, Adjusting [Ku], 6-21
Washer, Cab, Shld, Glass, 3-25
Washer, Collar, Gear [Ku], 6-15
Washer, Flat [Ku], 6-12, 6-27
Washer, Flat, #10, 3-17
Washer, Flat, 0.16b 0.38d .05, Pl, 06, 2-21
Washer, Flat, 0.19b 0.44d .03, Nyl, Blk, 2-31, 2-33
Washer, Flat, 0.19b 0.50d .03, Stl, Blk, 3-23, 3-25
Washer, Flat, 0.25, Fendr, 1-1, 2-81, 2-101
Washer, Flat, 0.25, Sae, 2-37, 2-77, 2-79, 2-87, 3-3, 3-5, 3-7, 3-9
Washer, Flat, 0.25, Sae, Blk, 3-27
Washer, Flat, 0.25, Std, 1-1, 2-45, 2-57, 2-85, 2-87, 3-15, 3-17, 3-29
Washer, Flat, 0.25b 0.56d .05, Pl, 10, 3-38
Washer, Flat, 0.27b 0.69d .05, Ss, 2-75, 2-117
Washer, Flat, 0.31, Fendr, 2-21, 2-101
Washer, Flat, 0.31, Sae, 2-39, 2-49, 2-57, 2-59, 2-61, 2-77, 2-101, 2-103, 2-105, 3-23
Washer, Flat, 0.31, Sae, Blk, 3-23, 3-25, 3-27
Washer, Flat, 0.31, Std, 1-1, 2-7, 2-9, 2-11, 2-15, 2-21, 2-25, 2-27, 2-39, 2-47, 2-51, 2-53, 2-57, 2-59, 2-61, 2-63, 2-77, 2-81, 2-83, 2-85, 2-87, 2-89, 2-91, 2-101, 2-111, 2-115, 2-149, 3-11, 3-15, 3-17, 3-23, 3-31
Washer, Flat, 0.31, Std (S30XP Only), 2-17
Washer, Flat, 0.31b 0.67d .07, Stl, Blk, 3-25
Washer, Flat, 0.32b 1.00d .12, Ss, 2-29, 2-81, 2-85, 2-101, 2-103
Washer, Flat, 0.34b 1.50d .12, Stl, Pl, 2-87
Washer, Flat, 0.38, Fendr, 2-99
Washer, Flat, 0.38, Sae, 2-31, 2-33, 2-69, 2-103, 2-105, 2-107, 2-117, 2-141, 2-143
Washer, Flat, 0.38, Std, 2-9, 2-11, 2-39, 2-49, 2-51, 2-53, 2-57, 2-59, 2-75, 2-85, 2-87, 2-101, 2-107, 2-109, 2-111, 2-115, 3-11, 3-19, 3-21, 3-27, 3-38
Washer, Flat, 0.38b 0.88d .08, Ss, 2-9, 2-11, 2-49, 2-105
Washer, Flat, 0.38b 0.88d .12, Stl, Pl, 2-17
Washer, Flat, 0.39b 0.75d .06, Nyl, 2-25, 2-81, 2-83, 2-89
Washer, Flat, 0.40b 0.81d .06, Nyl, 3-17
Washer, Flat, 0.40b 1.12d .12, Ss, 2-59
Washer, Flat, 0.40b 1.12d .12, Stl, Pl, 2-77, 2-99, 2-101, 2-103, 2-145, 2-147, 3-3, 3-7
Washer, Flat, 0.44b 2.00d .12, Stl, Pl, 2-39
Washer, Flat, 0.50, Sae, 2-65, 2-69, 2-71, 2-75, 2-105, 2-107
Washer, Flat, 0.50, Std, 2-7, 2-53, 2-95, 2-97
Washer, Flat, 0.53b 1.75d .12, Stl, Pl, 2-117
Washer, Flat, 0.56b 1.38d .11, Ss, 2-9, 2-11, 2-65
Washer, Flat, 0.62, Sae, 2-75
Washer, Flat, 0.75, Sae, 2-57, 2-61, 2-63, 2-145, 2-147

Washer, Flat, 0.81b 1.24d .03, Stl, Pl, 2-77
Washer, Flat, 08, 2-7, 2-73, 2-89, 2-91
Washer, Flat, 1.02b 1.75d .12, Stl, 2-69, 2-71, 2-93, 2-95
Washer, Flat, 1.10b 1.50d .12, Stl, Pl, 2-49
Washer, Flat, 1.39b 2.12d .13, Stl, 2-61, 2-63
Washer, Flat, 10, 2-15, 2-21, 2-31, 2-33, 2-43, 2-91, 2-93, 2-95, 2-105, 2-113, 3-3, 3-5, 3-7, 3-9, 3-15, 3-31
Washer, Flat, 2.16b 3.50d .16, Felt, 2-61
Washer, Flat, 2.24b 3.03d .12, Ni, 2-63
Washer, Flat, Belleville, .31, 2-49, 2-77, 2-117, 3-31
Washer, Flat, Belleville, .38, 2-9, 2-11
Washer, Flat, Belleville, .50, 2-65, 2-93, 2-95, 2-117, 2-143
Washer, Flat, Belleville, M10, 2-105
Washer, Flt, Pump, Hyd, 4-17, 4-19
Washer, Lock, Int-ext, 0.25, 2-39, 2-103, 3-31
Washer, Lock, Int-Ext, 0.31, 2-49
Washer, Lock, Int-Ext, 0.38, 2-7, 2-39, 2-103
Washer, Lock, Int-Ext, 10, 2-49, 2-91
Washer, Lock, Int, 0.25, 2-135
Washer, Lock, Int, 0.31, 2-49
Washer, Lock, Split [Ku], 6-7, 6-23, 6-27
Washer, Plain, 5-12, 5-29, 5-30
Washer, Plain [Ku], 6-18, 6-21
Washer, Pump, Hyd, 4-17, 4-19
Washer, Sealing, 0.28b 0.75d Ss, Neo, 3-23
Washer, Shaft, Rocker [Ku], 6-12
Washer, Spring, 5-7, 5-25, 5-29, 5-31
Washer, Thrust, 5-13
Washer, Thrust [Ku], 6-13
Washer, Thrust, 0.61b 1.25d .06, Fgl, 2-105
Weight, Comp, Govnr [Ku], 6-13
Weight, Counter, Casting, 52.8lb, 2-97
Weight, Counter, Casting, 72.8lb, 2-97
Weight, Counter, Casting, 72.8lb (S30 and S30XP Only), 2-7
Weight, Counter, Casting, 79.9 Lb, 2-7
Weight, Eccentric, 2-103
Wheel Kit, Rh, Replmt [4x], 2-63
Wheel, Steering, 14.0d 0.81b 36tooth, 2-35, 2-37
Wire, 10ga 16.0l Blk .25ring /.38ring, 2-49, 3-31

Y

Yoke, 6-19