PARTS LIST

RALLY 1200

SAVE THESE INSTRUCTIONS

OVERVIEW 120 VOLT

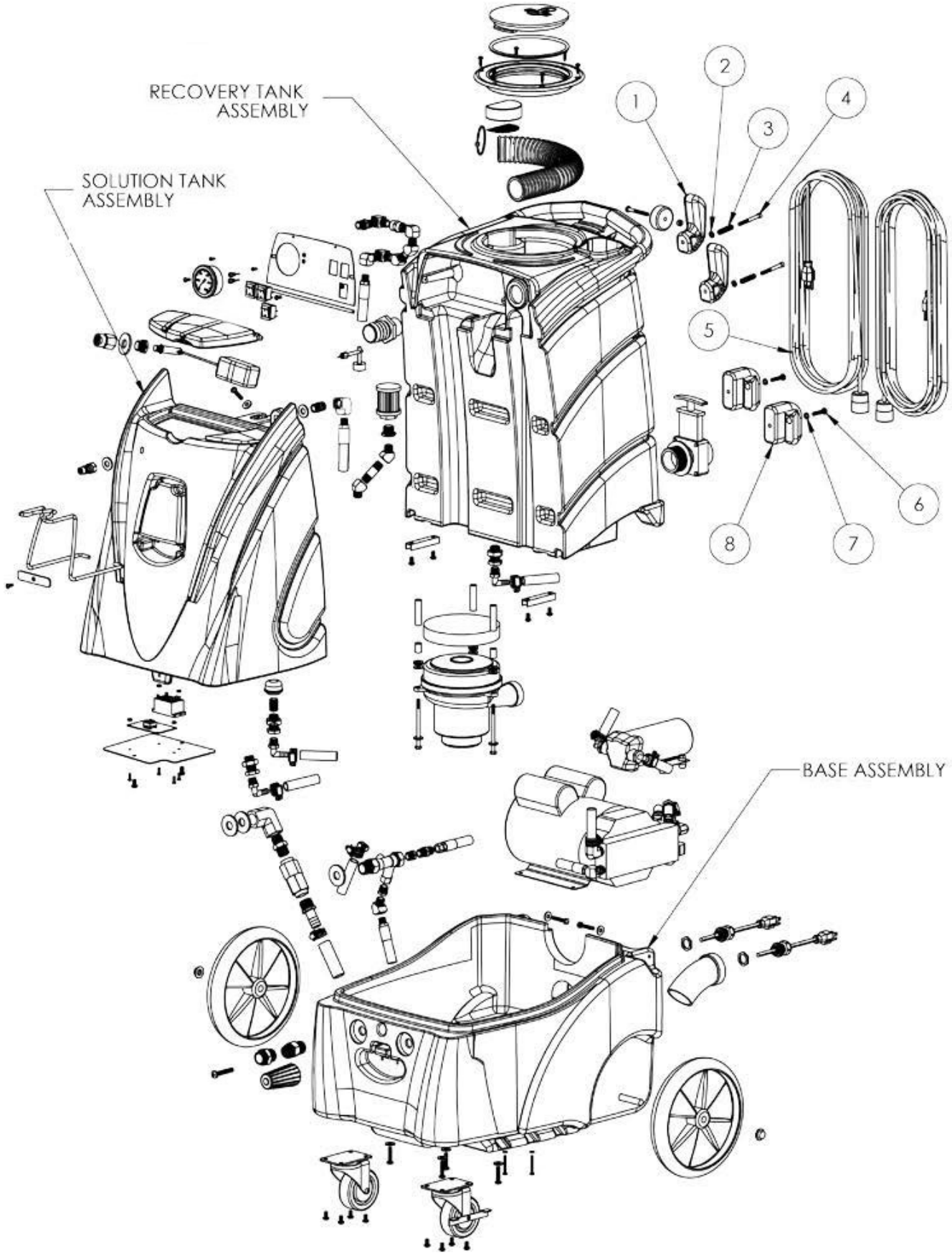

OVERVIEW 120 VOLT

ITEM	PART NO.	DESCRIPTION	QTY
1	4099011	CORD WRAP, (SET FOR ONE CORD, FASTENERS NOT INCLUDED)	2
2	9120935	1/4 WASHER, .268 ID x .5 OD x .060 THK (PK-10)	2
3	4098551	SPRING, CORD WRAP, UPPER	2
4	9121150	1/4-20 x 2-1/4 ROUND HEAD PHILIPS MACHINE SCREW (PK-2)	2
5	4099341	CORD, EXTENTION, 12-3 SJTW, 25FEET LONG	2
6	9121141	1/4-20 X 1 ROUND HEAD PHILIPS MACHINE SCREW (PK-5)	2
7	9120935	1/4 WASHER, .268 ID x .5 OD x .060 THK (PK-10)	2
8	4099011	CORD WRAP, (SET FOR ONE CORD, FASTENERS NOT INCLUDED)	2
N/S	4093359	1.5" X 25' VACUUM HOSE, KIT	1
N/S	4093351	1.5" X 25' VACUUM HOSE	1
N/S	2599621	1.5 ID SCREW CUFF TO FIT 2" WAND	1
N/S	4093331	25' HIGH PRESSURE LINE COMP.	1

BASE ASSEMBLY 120 VOLT

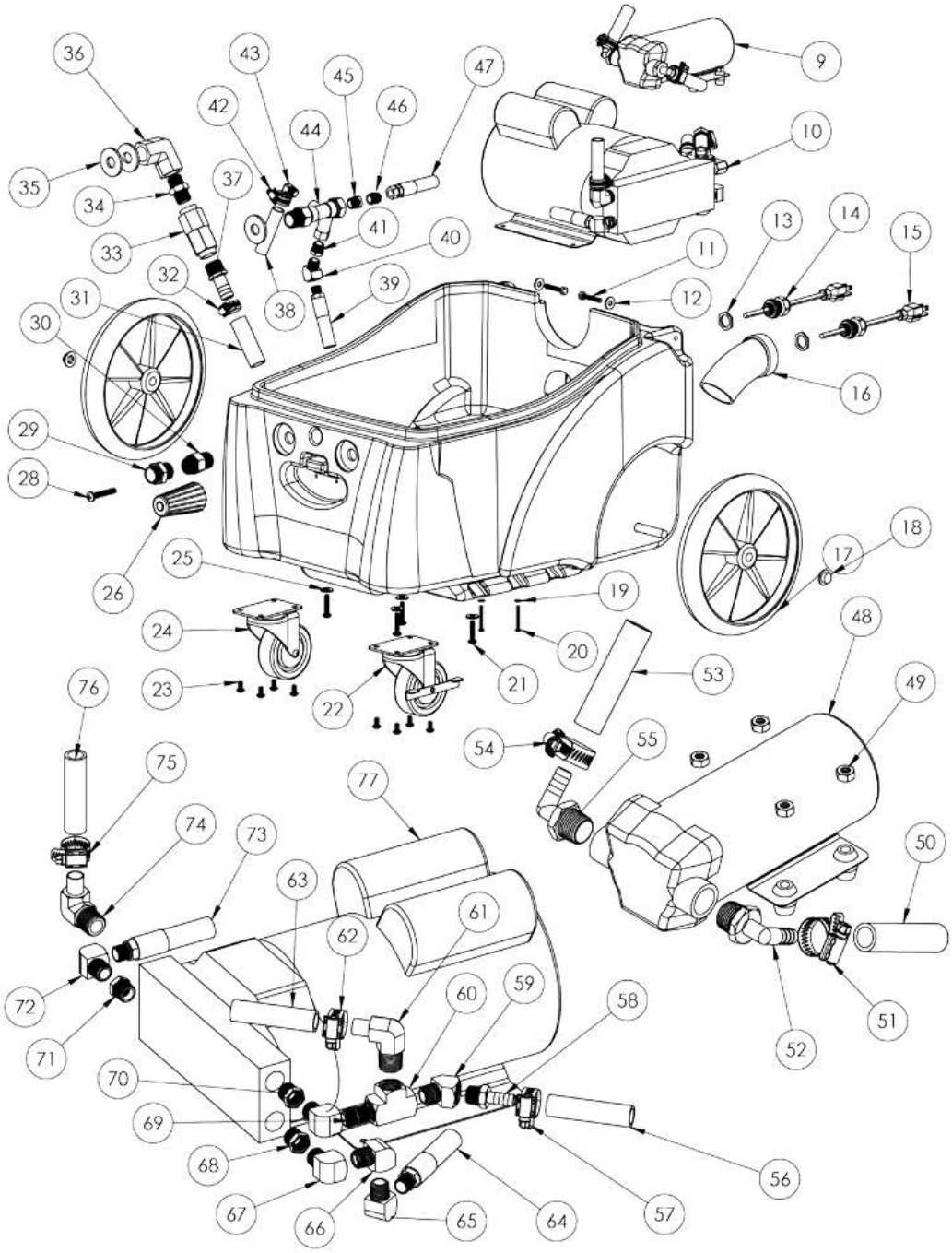

ITEM	PART NO.	DESCRIPTION	QTY
9	4099481	PUMP, AUTO DUMP, RALLY 1200	1
10	4099491	PUMP, 1200 PSI, 120V, RALLY 1200	1
11	9121780	5/16 -18 X 1-1/2 HEX HEAD BOLT (PK 2)	2
12	9121390	11/32 ID X 11/16 0D FLAT WASHER (5/16) (PK 10)	2
13	4099321	STRAIN RELIEF, HEYCO-PG16, W/NUT	2
14	4099321	STRAIN RELIEF, HEYCO-PG16, W/NUT	2
15	4099331	CORD, PIG TAIL, 12-3 SJTW	2
16	4093041	SPOUT, DRAIN GATE	1
17	4099811	WHEEL,10" DIA, EXTRATOR	2
18	4092151	NUT, PUSH-ON, HUB CAP, 1/2 AXLE	2
19	9120930	11/32 ID X 11/16 0D FLAT WASHER (5/16) (PK 10)	4
20	9121151	1/4-20 X 2-3/4" ROUND HEAD PHILIPS (PK 5)	4
21	9121150	1/4-20x2-1/4 ROUND HEAD PHILIPS (PK 2)	4

BASE ASSEMBLY 120 VOLT

ITEM	PART NO.	DESCRIPTION	QTY
22	4099831	CASTER, 3.5", W/BRAKE, EXTRATOR	1
23	9121045	1/4-20 x 1/2 ROUND HEAD (PK 10)	8
24	4099821	CASTER, 3.5", EXTRATOR	1
25	9120930	9/32 ID X 5/8 0D FLAT WASHER (1/4) (PK 10)	4
26	4098361	UNLOADER, VRS3, W/KNOB, 1200PSI, EZ	1
28	9121810	5/16-18 X 2 ROUND HEAD SCREW (PK 2)	1
29	4099891	FITTING, 1/2 MPT X 3/4 MALE GARDEN HOSE	1
30	4099921	FITTING, PIPE COUPLER, 1/2 FNPT, BRASS	1
31	4098321	HOSE, 1/2, DUMP PUMP-EXIT, 23 LONG	1
32	2392141	HOSE CLAMP 11/16 TO 1-1/4 DIA	1
33	4099881	CHECK VALVE, 1/4 NPT, BRASS	1
34	4099911	FITTING, HEX NIPPLE, 1/2 NPT, BRASS	1
35	4098581	WASHER, FLAT, 3/4", STAINLESS STEEL, SMALL OD	2
36	4099971	FITTING,90 DEGREE ELBOW,1/2 FNPT, BRASS	1
37	4099901	FITTING, 1/2 HOSE BARB X 1/2 MNPT, BRASS	1
38	4098331	HOSE, 1/2, UNLOADER-SOLUTION TANK, 30"	1
39	4098681	HOSE, 1/4 MPT X 1/4 FPT, 58" LONG	1
40	2795861	FITTING, STREET ELBOW, 45 DEGREE x 1/4" NPT	1
41	4890211	FITTING, REDUCER, 3/8 MPT – 1/4 FPT, BRASS	1
42	2392141	HOSE CLAMP 11/16 TO 1 1/4 DIA	1
43	4099191	FITTING, 3/8 MNPT X 1/2 HOSE BARB,90 DEG, BRASS	1
44	4098361	UNLOADER, VRS3, W/KNB, 1200PSI, EZ	1
45	4890211	FITTING, REDUCER, 3/8 MPT-1/4 FPT, BRASS	1
46	4096041	FITTING, CLOSE NIPPLE, 1/4 MNPT	1
47	4098671	HOSE,1/4 MPT X 1/4 FPT, 34" LONG	1
48	4099481	PUMP, AUTO DUMP, RALLY 1200	1
49	9120920	1/4-20 HEX NUT STAINLESS STEEL (PK 10)	4
50	4098321	HOSE, 1/2, DUMP PUMP-EXIT, 23LONG	1
51	2392141	HOSE CLAMP 11/16 TO 1 1/4 DIA	1
52	4098371	FITTING, 1/2 HOSE BARB X 3/4 QD EL	1
53	4098341	HOSE, 1/2, RECOVERY TANK-DUMP PUMP, 24	1
54	2392141	HOSE CLAMP 11/16 TO 1 1/4 DIA	1
55	4098371	FITTING, 1/2 HOSE BARB X 3/4 QD EL	1
56	4098351	HOSE, 1/2 SOLUTION TANK-PUMP, 67" LONG	1
57	2392141	HOSE CLAMP 11/16 TO 1 1/4 DIA	1
58	4099181	FITTING,1/4 MNPT-1/2 HOSE BARB, STRAIGHT	1
59	2795861	FITTING,STREET ELBOW, 45 DEGREE x 1/4" NPT	1
60	4096811	FITTING, TEE, 1/4 FNPT, BRASS	1
61	4099001	FITTING, 1/4 MNPT-1/2 HOSE BARB, 90 DEG, BRASS	1
62	2392141	HOSE CLAMP 11/16 TO 1 1/4 DIA	1
63	4098381	HOSE, DUALFEED FOR 1200PSI PUMP	1
64	4098691	HOSE, 1/4 MPT X 1/4 FPT, 80" LONG	1
65	2795851	FITTING, 90 DEGREE, STREET ELBOW, 1/4 NPT	1
66	4099171	FITTING, 90 DEG, STREET ELBOW, 1/4NPT, LOW PROFILE	1
67	4099171	FITTING, 90 DEG, STREET ELBOW, 1/4NPT, LOW PROFILE	1
68	4890211	FITTING, REDUCER, 3/8 MPT-1/4 FPT, BRASS	1
69	4096041	FITTING, CLOSE NIPPLE, 1/4 MNPT	1
70	4890211	FITTING, REDUCER, 3/8 MPT-1/4 FPT, BRASS	1
71	4890211	FITTING, REDUCER, 3/8 MPT-1/4 FPT, BRASS	1
72	4099171	FITTING, 90 DEG, STREET ELBOW, 1/4NPT, LOW PROFILE	1
73	4098671	HOSE, 1/4 MPT X 1/4 FPT, 34" LONG	1
74	4099001	FITTING, 1/4 MNPT-1/2 HOSE BARB, 90 DEG, BRASS	1
75	2392141	HOSE CLAMP 11/16 TO 1 1/4 DIA	1
76	4098381	HOSE, DUAL FEED FOR 1200PSI PUMP	1

RECOVERY TANK ASSEMBLY 120 VOLT

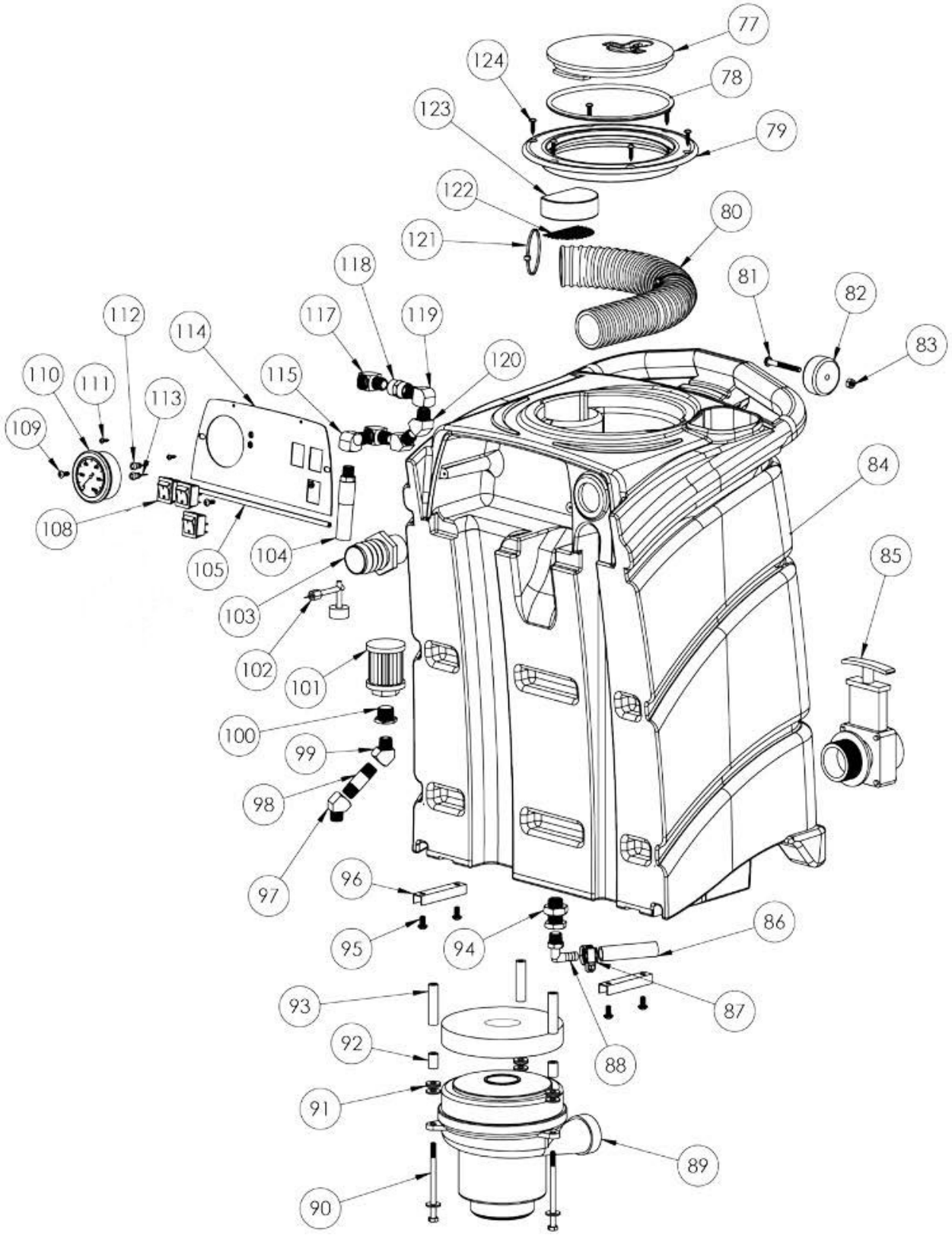

RECOVERY TANK ASSEMBLY 120 VOLT

ITEM	PART NO.	DESCRIPTION	QTY
77	4099791	LID, RECOVERY, 6", TWIST LOCK, BLACK	1
78	4099791	LID, RECOVERY, 6", TWIST LOCK, BLACK	1
79	4099791	LID, RECOVERY, 6", TWIST LOCK ,BLACK	1
80	4098751	HOSE, DIFFUSING, RECOVERY TANK	1
81	9121150	1/4 -20 x 2, ROUND HEAD PHILIPS (PK 2)	1
82	4099841	WHEEL, 2", EXTRACTOR, HANDLE	1
83	9120920	1/4-20 HEX NUT STAINLESS STEEL (PK 10)	1
84	4097791	RECOVERY TANK, 12 GALLON, BLACK, RALLY 1200	1
85	4091231	VALVE, GATE, DUMP, 1-1/2"	1
86	4098341	HOSE, 1/2, RECOVERY TANK - DUMP PUMP, 24”	1
87	2392141	HOSE CLAMP 11/16 TO 1 1/4 DIA	1
88	4099001	FITTING, 1/4 MNPT – 1/2 HOSE BARB, 90 DEGREE, BRASS	1
89	4099501	MOTOR, VAC, 2 STAG, 120V, 122475-00	1
90	9121360	1/4-20 x 4 HEX HEAD BOLT (PK 2)	3
91	9120930	9/32 ID X 5/8 0D FLATWASHER (1/4) (PK 10)	3
92	4098541	SPACER, 1/2 OD X 1/4 ID X 3/4, NYLON	3
93	4098561	SPACER, 1/2 OD X 1/4 ID X 2-1/8, NYLON	3
94	4098981	FITTING, BULKHEAD, 1/4 NPT	1
95	9121045	1/4-20 x 1/2 RND HD (PK 10)	4
96	4099621	BRACKET, RECOVERY TO SOLUTION	2
97	2795861	FITTING, STREET ELBOW, 45 DEGREE x 1/4"NPT	1
98	4099981	FITTING, NIPPLE, 1/4 NPT, 2.5 LONG, BRASS	1
99	2795861	FITTING, STREET ELBOW, 45 DEGREE x 1/4"NPT	1
100	4099961	FITTING, BUSHING, 3/4 MNPT X 3/8 FNPT	1
101	4099871	STRAINER, AUTO DUMP, RALLY 1200	1
102	4099311	SWITCH, FLOAT, HORIZONTAL MOUNT	1
103	4091241	HOSE BARB, 1.5", VACUUM	1
104	4098691	HOSE, 1/4 MPT X 1/4 FPT, 80" LONG	1
105	4099851	TRIM, CONTROL PANEL, EXTRACTOR	1
108	4099291	SWITCH, ROCKER, SPLASH PROOF	3
109	9120715	10 - 32 x 1/2 PAN HEAD PHILIPS SCREW (PK 5)	1
110	4099471	GAUGE, 2000PSI, PANEL MOUNT, 1200	1
111	9120140	#6 X 5/8 PAN HEAD SHEET METAL SCREW (PK 3)	2
112	4099361	LIGHT, LED, GREEN, 220V	1
113	4099351	LIGHT, LED, RED, 110V	1
114	4097991	PANEL, 3 SWITCH, W/GAGE, NO HOUR METER, RALLY1200	1
	4099581	PANEL, 3 SWITCH, W/GAGE & HOUR METER, RALLY1200	1
115	2795851	FITTING, 90 DEGREE, STREET ELBOW, 1/4 NPT	2
117	4099171	FITTING, 90 DEG, STREET ELBOW, 1/4NPT, LOW PROFILE	1
118	4099991	FITTING,COUPLER,1/4FNPT, BRASS	1
119	4099171	FITTING, 90 DEG, STREET ELBOW, 1/4NPT, LOW PROFILE	1
120	2795861	FITTING, STREET ELBOW, 45 DEGREE x 1/4" NPT	2
121	9123000	11" LONG WIRE TIE (PK-5)	2
122	4099531	SCREEN, INTAKE, VAC MOTOR, SPOTTER	1
123	4099711	FILTER, INTAKE, EXTRACTOR	1
124	9121212	#12 x 1/2 PHILIPS HEAD SHEET METAL SCREW (PK 6)	6

SOLUTION TANK ASSEMBLY 120 VOLT

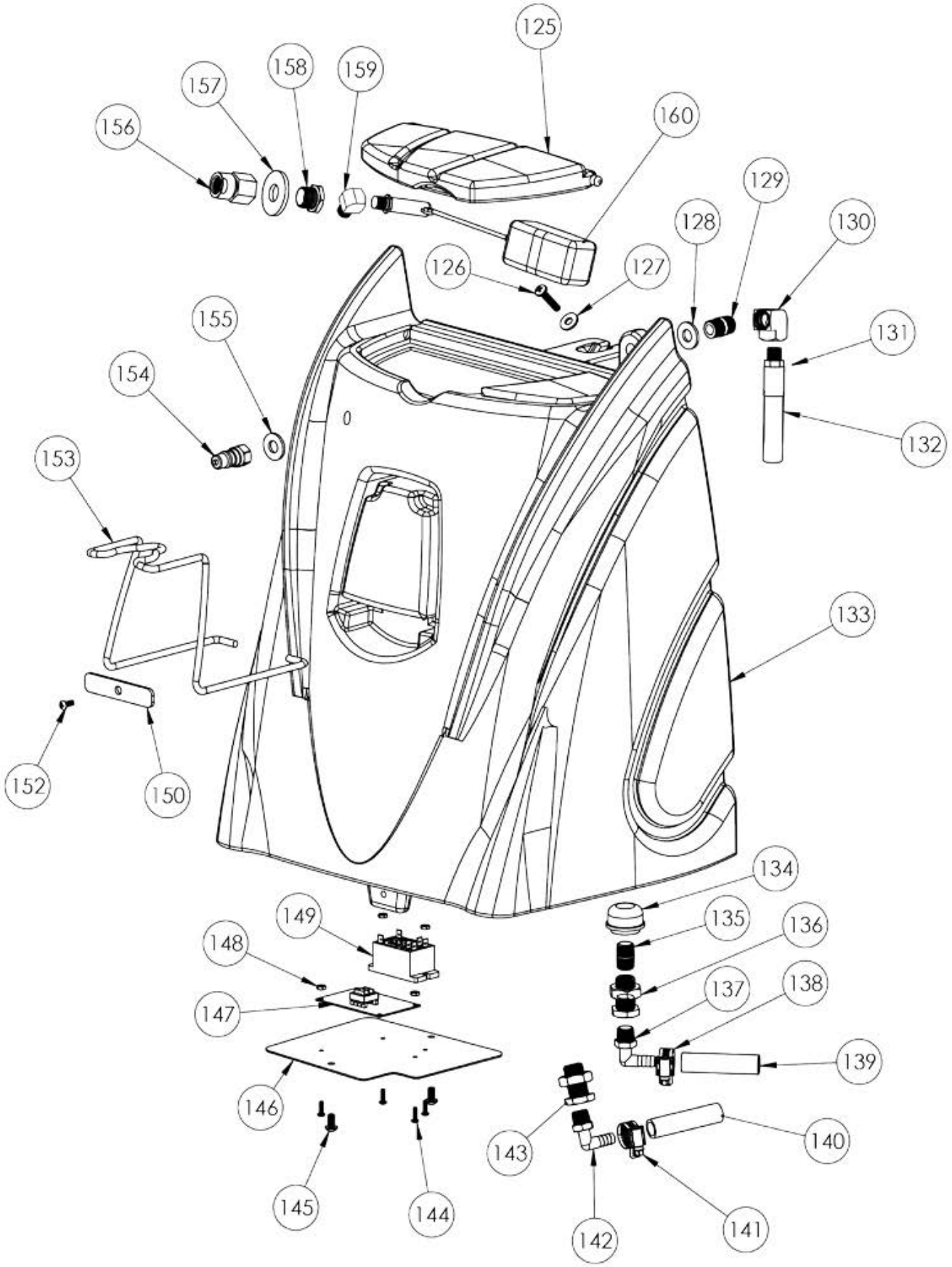

SOLUTION TANK ASSEMBLY 120 VOLT

ITEM	PART NO.	DESCRIPTION	QTY
125	4099041	LID,SOLUTION TANK,12GAL,BLACK	1
126	9121146	1/4-20 X 1-1/4 ROUND HEAD PHILIPS (PK 2)	1
127	9121390	11/32 ID X 11/16 0D FLATWASHER 5/16 (PK 10)	1
128	9122450	1/2 SAE FLAT WASHER STAINLESS (PK 5)	1
129	4098991	FITTING, PIPE NIPPLE,1/4MPT X 1-1/2	1
130	3891141	FITTING, BRASS ELBOW, 90 DEGREE X 1/4" NPT	1
132	4098681	HOSE, 1/4 MPT X 1/4 FPT, 58" LONG	1
133	4099051	TANK, SOLUTION, 12 GAL, GREEN	1
134	4099861	FILTER, 1/4" PIPE, ACORN,EXT	1
135	4096041	FITTING, CLOSE NIPPLE, 1/4 MNPT	1
136	4098981	FITTING, BULKHEAD, 1/4 NPT	1
137	4099001	FITTING, 1/4 MNPT - 1/2 BARB, 90 DEGREE, BRASS	1
138	2392141	HOSE CLAMP 11/16 to 1 1/4 DIA	1
139	4098351	HOSE,1/2 SOL TANK-PUMP,67"LONG	1
140	4098331	HOSE,1/2,UNLOADER-SOL TANK,30"	1
141	2392141	HOSE CLAMP 11/16 to 1 1/4 DIA	1
142	4099001	FITTING,1/4 MNPT-1/2 BARB, 90 DEGREE, BRASS	1
143	4098981	FITTING, BULKHEAD, 1/4 NPT	1
144	9120075	6-32 X 5/8 ROUND HEAD PHILIPS M/S (PK 10)	4
145	9121045	1/4-20 X 1/2 ROUND HEAD PHILIPS (PK 10)	2
146	4099651	COVER, ELECTRICAL COMPARTMENT	1
147	4099371	DUAL CIRCUIT INDICATOR, 120V	1
148	9120020	6-32 HEX NUT W/ STAR LOCK WASHER	4
149	4099301	RELAY, VACUUM MOTOR, 12 GAL, 120V	1
150	4099641	PLATE, KEEPER, HOSE HOOK, UPPER	1
152	9121045	1/4-20 X 1/2 ROUND HEAD PHILIPS (PK 10)	1
153	4099601	HOOK, HOSE, UPPER	1
154	3590751	FITTING, 1/4" FNPT X 1/4 QD	1
155	9122450	1/2 SAE FLAT WASHER STAINLESS (PK 5)	1
156	4099941	FITTING, HOSE COUPLER, 3/4 FNPT, BRASS	1
157	4098571	WASHER, FLAT, 1", SS, SMALL OD	1
158	4099961	FITTING, BUSHING, 3/4 MNPT X 3/8 FNPT	1
159	4099951	FITTING, 45 DEGREE STREET ELBOW, 3/8 NPT, BRASS	1
160	4099931	VALVE, AUTO-FILL, COMPLETE, 1200	1

WIRE DIAGRAM 120 VOLT

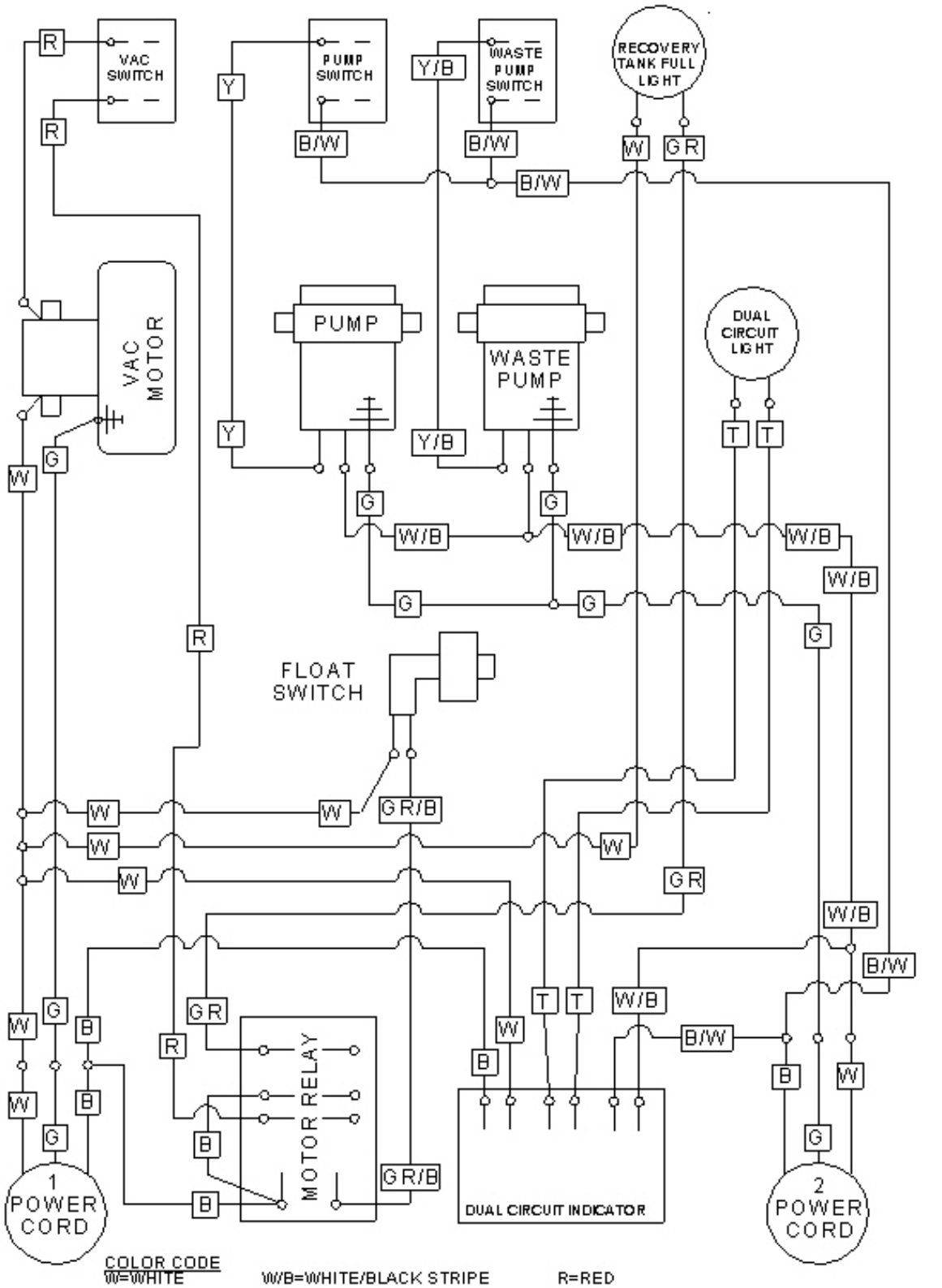

COLOR CODE

W=WHITE
B=BLACK
G=GREEN
W/B=WHITE/BLACK STRIPE
B/W=BLACK/WHITE STRIPE
GR/B=GREY/BLACK STRIPE
R=RED
T=TAN
GR=GREY
Y=YELLOW
Y/B=YELLOW/BLACK STRIPE

WIRE DIAGRAM 240 VOLT

RALLY 1200 240 VOLT WIRING DIAGRAM

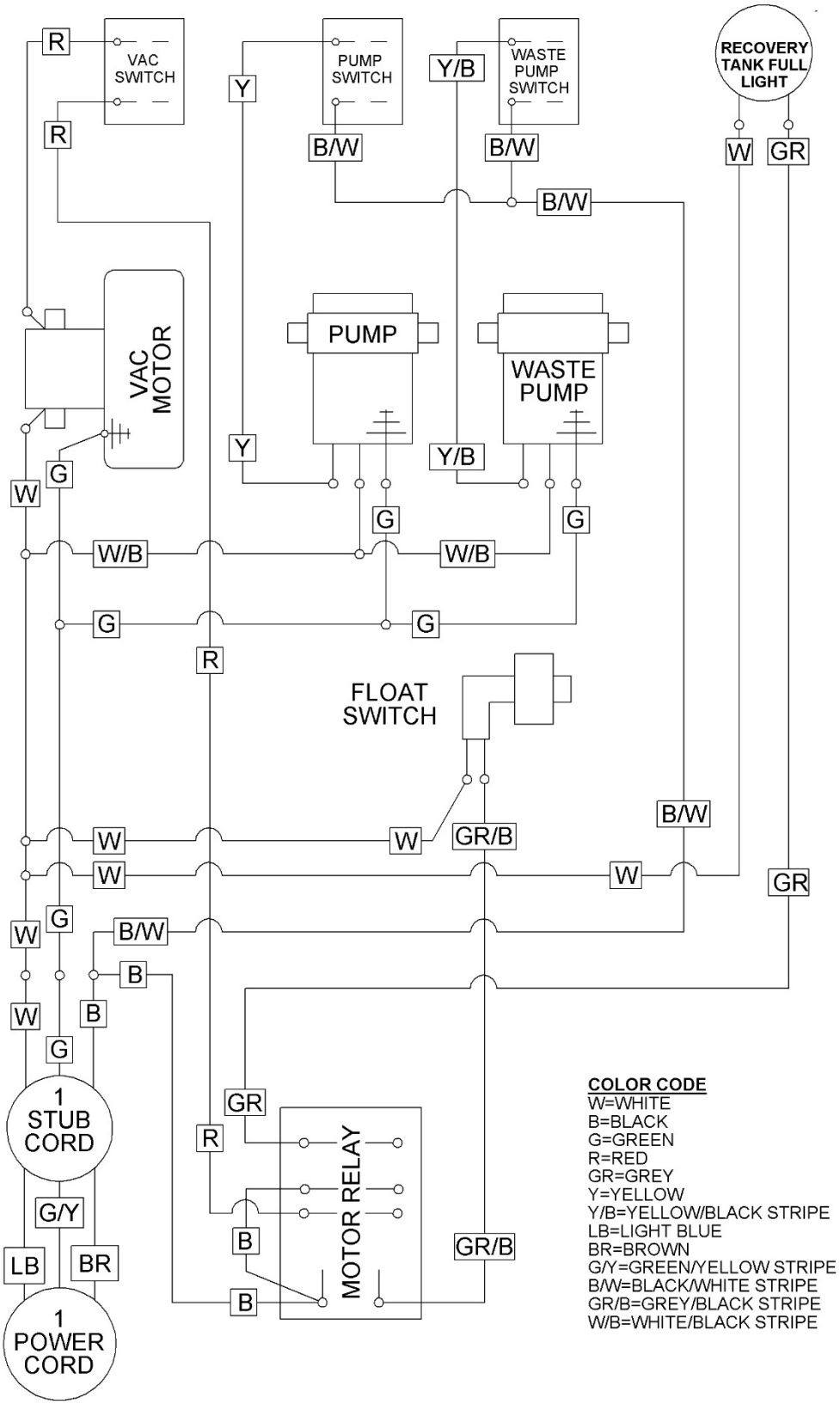

OVERVIEW 240 VOLT

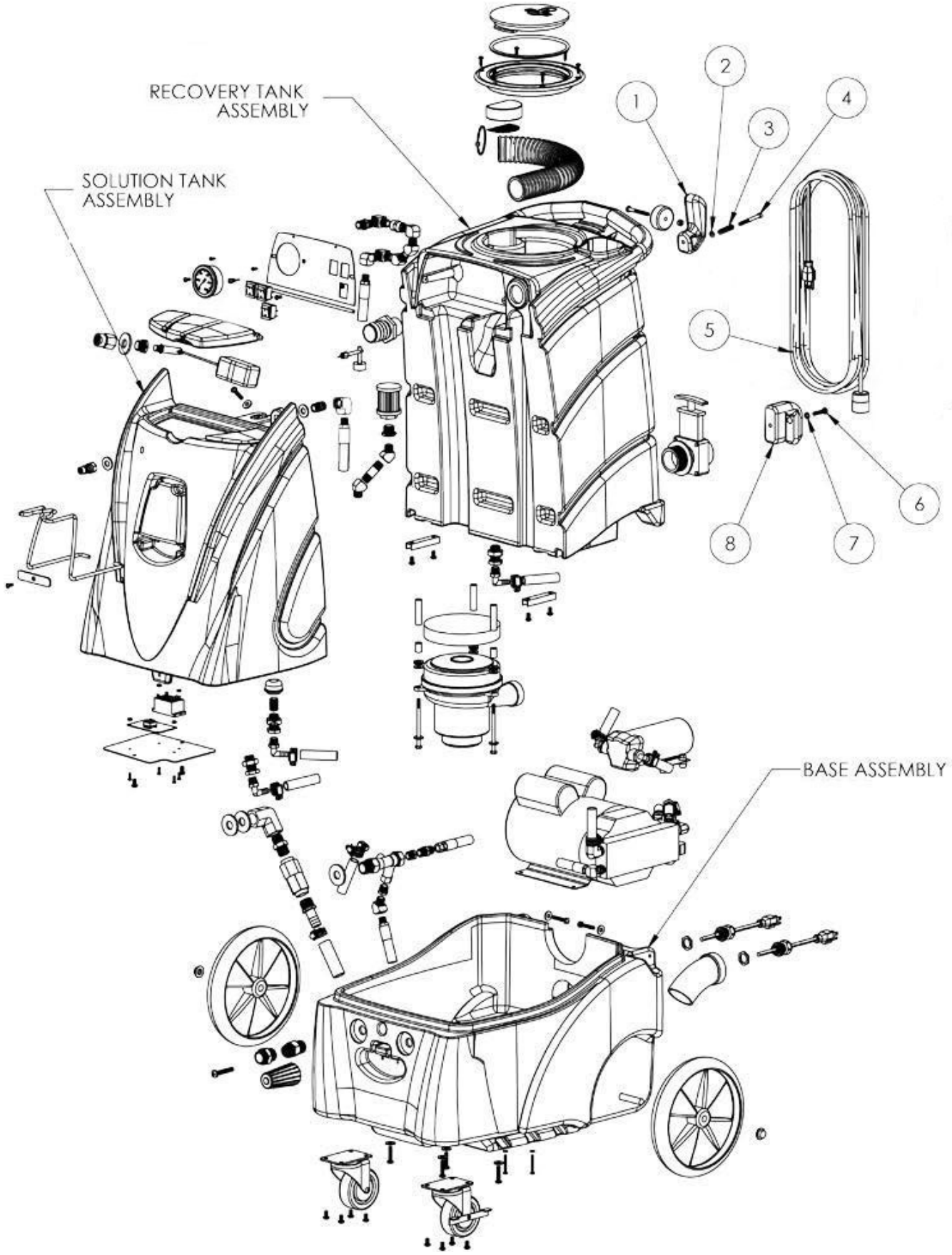

OVERVIEW 240 VOLT

ITEM	PART NO.	DESCRIPTION	QTY
1	4099011	CORD WRAP, (SET FOR ONE CORD, FASTENERS NOT INCLUDED)	1
2	9120935	1/4 WASHER, .268 ID x .5 OD x .060 THK (PK-10)	1
3	4098551	SPRING, CORD WRAP, UPPER	1
4	9121150	1/4-20 x 2-1/4 ROUND HEAD PHILIPS MACHINE SCREW (PK-2)	1
5	4898721	CORD, SHUKO W/TWIST LOCK, 50 FEET LONG	1
6	9121141	1/4-20 X 1 ROUND HEAD PHILIPS MACHINE SCREW (PK-5)	1
7	9120935	1/4 WASHER, .268 ID x .5 OD x .060 THK (PK-10)	1
8	4099011	CORD WRAP, (SET FOR ONE CORD, FASTENERS NOT INCLUDED)	1
N/S	4093359	1.5" X 25' VACUUM HOSE, KIT	1
N/S	4093351	1.5" X 25' VACUUM HOSE	1
N/S	2599621	1.5 ID SCREW CUFF TO FIT 2" WAND	1
N/S	4093331	25' HIGH PRESSURE LINE COMP.	1

BASE ASSEMBLY 240 VOLT

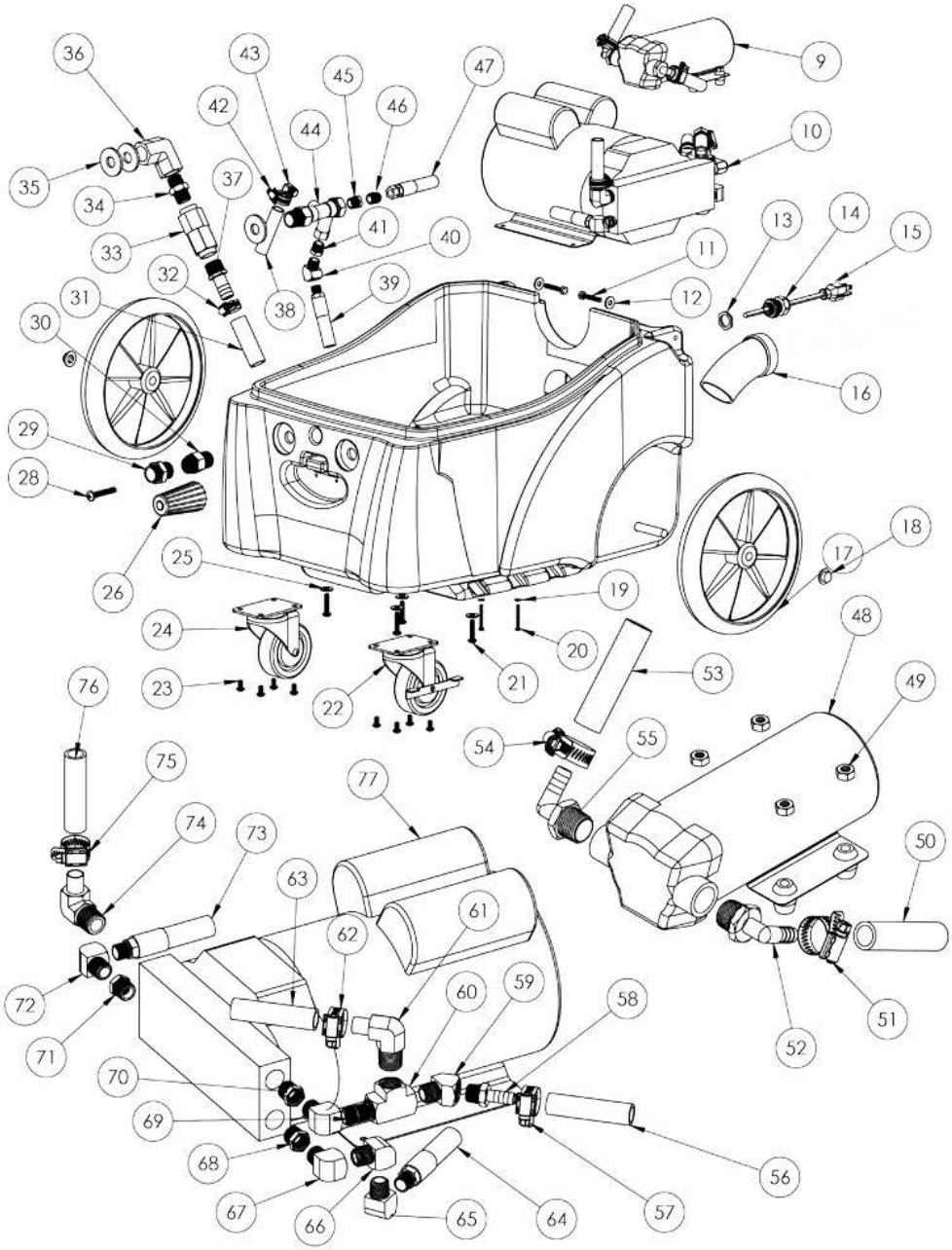

ITEM	PART NO.	DESCRIPTION	QTY
9	4098041	PUMP, AUTO DUMP, RALLY 1200, 240 VOLT	1
10	4099491	PUMP, 1200 PSI, 120V, RALLY 1200	1
11	9121780	5/16 -18 X 1-1/2 HEX HEAD BOLT (PK 2)	2
12	9121390	11/32 ID X 11/16 0D FLAT WASHER (5/16) (PK 10)	2
13	4099321	STRAIN RELIEF, HEYCO-PG16, W/NUT	1
14	4099321	STRAIN RELIEF, HEYCO-PG16, W/NUT	1
15	4892711	CORD, PIG TAIL, W/TWIST LOCK,17” LONG, 240 VOLT	1
16	4093041	SPOUT, DRAIN GATE	1
17	4099811	WHEEL,10" DIA, EXTRATOR	2
18	4092151	NUT, PUSH-ON, HUB CAP, 1/2 AXLE	2
19	9120930	11/32 ID X 11/16 0D FLAT WASHER (5/16) (PK 10)	4
20	9121151	1/4-20 X 2-3/4" ROUND HEAD PHILIPS (PK 5)	4
21	9121150	1/4-20x2-1/4 ROUND HEAD PHILIPS (PK 2)	4

BASE ASSEMBLY 240 VOLT

ITEM	PART NO.	DESCRIPTION	QTY
22	4099831	CASTER, 3.5", W/BRAKE, EXTRATOR	1
23	9121045	1/4-20 x 1/2 ROUND HEAD (PK 10)	8
24	4099821	CASTER, 3.5", EXTRATOR	1
25	9120930	9/32 ID X 5/8 0D FLAT WASHER (1/4) (PK 10)	4
26	4098361	UNLOADER, VRS3, W/KNOB, 1200PSI, EZ	1
28	9121810	5/16-18 X 2 ROUND HEAD SCREW (PK 2)	1
29	4099891	FITTING, 1/2 MPT X 3/4 MALE GARDEN HOSE	1
30	4099921	FITTING, PIPE COUPLER, 1/2 FNPT, BRASS	1
31	4098321	HOSE, 1/2, DUMP PUMP-EXIT, 23 LONG	1
32	2392141	HOSE CLAMP 11/16 TO 1-1/4 DIA	1
33	4099881	CHECK VALVE, 1/4 NPT, BRASS	1
34	4099911	FITTING, HEX NIPPLE, 1/2 NPT, BRASS	1
35	4098581	WASHER, FLAT, 3/4", STAINLESS STEEL, SMALL OD	2
36	4099971	FITTING,90 DEGREE ELBOW,1/2 FNPT, BRASS	1
37	4099901	FITTING, 1/2 HOSE BARB X 1/2 MNPT, BRASS	1
38	4098331	HOSE, 1/2, UNLOADER-SOLUTION TANK, 30"	1
39	4098681	HOSE, 1/4 MPT X 1/4 FPT, 58" LONG	1
40	2795861	FITTING, STREET ELBOW, 45 DEGREE x 1/4" NPT	1
41	4890211	FITTING, REDUCER, 3/8 MPT – 1/4 FPT, BRASS	1
42	2392141	HOSE CLAMP 11/16 TO 1 1/4 DIA	1
43	4099191	FITTING, 3/8 MNPT X 1/2 HOSE BARB,90 DEG, BRASS	1
44	4098361	UNLOADER, VRS3, W/KNB, 1200PSI, EZ	1
45	4890211	FITTING, REDUCER, 3/8 MPT-1/4 FPT, BRASS	1
46	4096041	FITTING, CLOSE NIPPLE, 1/4 MNPT	1
47	4098671	HOSE,1/4 MPT X 1/4 FPT, 34" LONG	1
48	4098041	PUMP, AUTO DUMP, RALLY 1200, 240 VOLT	1
49	9120920	1/4-20 HEX NUT STAINLESS STEEL (PK 10)	4
50	4098321	HOSE, 1/2, DUMP PUMP-EXIT, 23LONG	1
51	2392141	HOSE CLAMP 11/16 TO 1 1/4 DIA	1
52	4098371	FITTING, 1/2 HOSE BARB X 3/4 QD EL	1
53	4098341	HOSE, 1/2, RECOVERY TANK-DUMP PUMP, 24	1
54	2392141	HOSE CLAMP 11/16 TO 1 1/4 DIA	1
55	4098371	FITTING, 1/2 HOSE BARB X 3/4 QD EL	1
56	4098351	HOSE, 1/2 SOLUTION TANK-PUMP, 67" LONG	1
57	2392141	HOSE CLAMP 11/16 TO 1 1/4 DIA	1
58	4099181	FITTING,1/4 MNPT-1/2 HOSE BARB, STRAIGHT	1
59	2795861	FITTING,STREET ELBOW, 45 DEGREE x 1/4" NPT	1
60	4096811	FITTING, TEE, 1/4 FNPT, BRASS	1
61	4099001	FITTING, 1/4 MNPT-1/2 HOSE BARB, 90 DEG, BRASS	1
62	2392141	HOSE CLAMP 11/16 TO 1 1/4 DIA	1
63	4098381	HOSE, DUALFEED FOR 1200PSI PUMP	1
64	4098691	HOSE, 1/4 MPT X 1/4 FPT, 80" LONG	1
65	2795851	FITTING, 90 DEGREE, STREET ELBOW, 1/4 NPT	1
66	4099171	FITTING, 90 DEG, STREET ELBOW, 1/4NPT, LOW PROFILE	1
67	4099171	FITTING, 90 DEG, STREET ELBOW, 1/4NPT, LOW PROFILE	1
68	4890211	FITTING, REDUCER, 3/8 MPT-1/4 FPT, BRASS	1
69	4096041	FITTING, CLOSE NIPPLE, 1/4 MNPT	1
70	4890211	FITTING, REDUCER, 3/8 MPT-1/4 FPT, BRASS	1
71	4890211	FITTING, REDUCER, 3/8 MPT-1/4 FPT, BRASS	1
72	4099171	FITTING, 90 DEG, STREET ELBOW, 1/4NPT, LOW PROFILE	1
73	4098671	HOSE, 1/4 MPT X 1/4 FPT, 34" LONG	1
74	4099001	FITTING, 1/4 MNPT-1/2 HOSE BARB, 90 DEG, BRASS	1
75	2392141	HOSE CLAMP 11/16 TO 1 1/4 DIA	1
76	4098381	HOSE, DUAL FEED FOR 1200PSI PUMP	1

RECOVERY TANK ASSEMBLY 240 VOLT

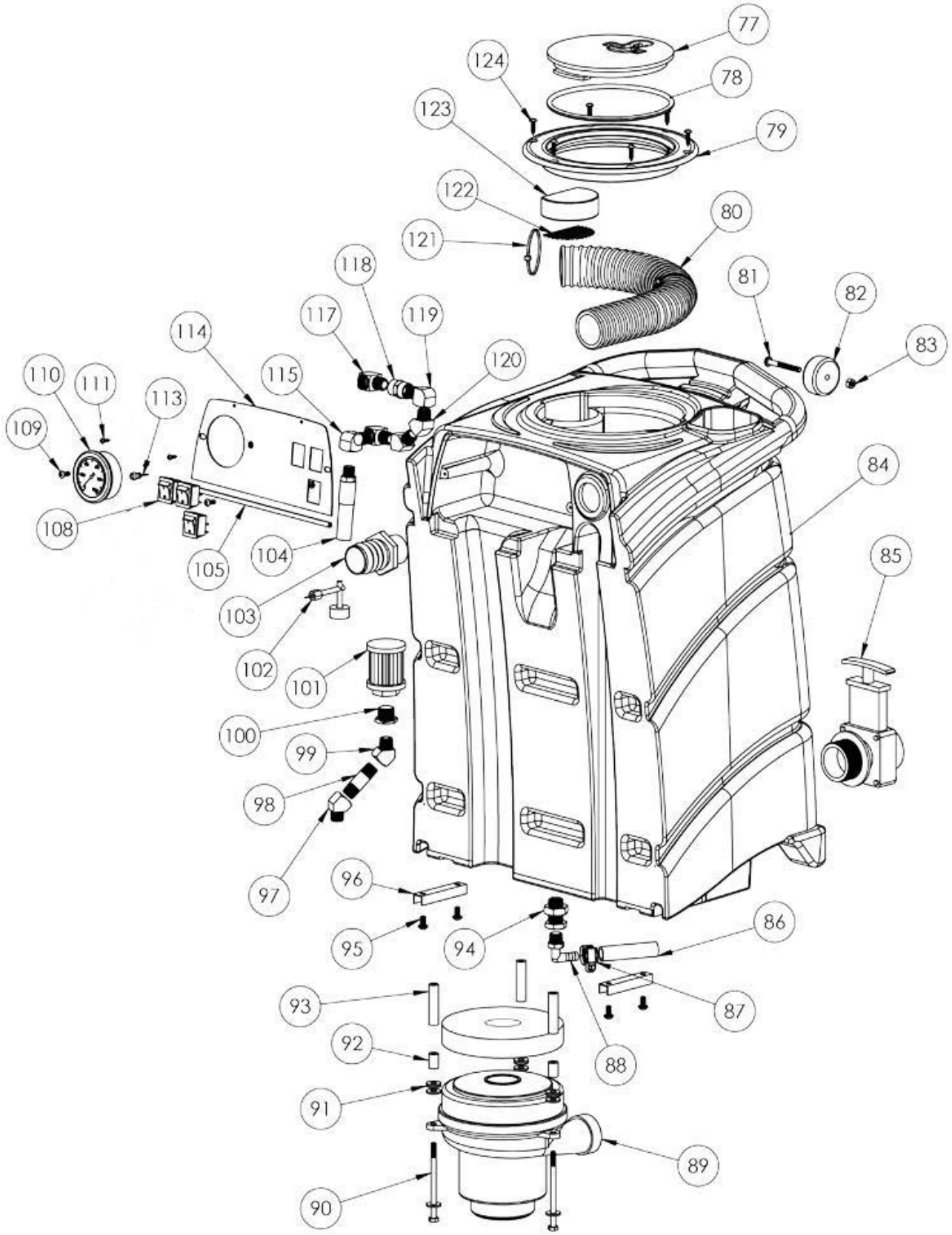

RECOVERY TANK ASSEMBLY 240 VOLT

ITEM	PART NO.	DESCRIPTION	QTY
77	4099791	LID, RECOVERY, 6", TWIST LOCK, BLACK	1
78	4099791	O-RING, LID, RECOVERY, 6", EXTRACTOR	1
79	4099791	LID, RECOVERY, 6", TWIST LOCK ,BLACK	1
80	4098751	HOSE, DIFFUSING, RECOVERY TANK	1
81	9121150	1/4 -20 x 2, ROUND HEAD PHILIPS (PK 2)	1
82	4099841	WHEEL, 2", EXTRACTOR, HANDLE	1
83	9120920	1/4-20 HEX NUT STAINLESS STEEL (PK 10)	1
84	4099021	BASE, EXTRACTOR, 12 GALLON, BLACK	1
85	4091231	VALVE, GATE, DUMP, 1-1/2"	1
86	4098341	HOSE, 1/2, RECOVERY TANK - DUMP PUMP, 24”	1
87	2392141	HOSE CLAMP 11/16 TO 1 1/4 DIA	1
88	4099001	FITTING, 1/4 MNPT – 1/2 HOSE BARB, 90 DEGREE, BRASS	1
89	4098411	MOTOR, VAC, 2 STAG, 240V,	1
90	9121360	1/4-20 x 4 HEX HEAD BOLT (PK 2)	3
91	9120930	9/32 ID X 5/8 0D FLATWASHER (1/4) (PK 10)	3
92	4098541	SPACER, 1/2 OD X 1/4 ID X 3/4, NYLON	3
93	4098561	SPACER, 1/2 OD X 1/4 ID X 2-1/8, NYLON	3
94	4098981	FITTING, BULKHEAD, 1/4 NPT	1
95	9121045	1/4-20 x 1/2 RND HD (PK 10)	4
96	4099621	BRACKET, RECOVERY TO SOLUTION	2
97	2795861	FITTING, STREET ELBOW, 45 DEGREE x 1/4"NPT	1
98	4099981	FITTING, NIPPLE, 1/4 NPT, 2.5 LONG, BRASS	1
99	2795861	FITTING, STREET ELBOW, 45 DEGREE x 1/4"NPT	1
100	4099961	FITTING, BUSHING, 3/4 MNPT X 3/8 FNPT	1
101	4099871	STRAINER, AUTO DUMP, RALLY 1200	1
102	4099311	SWITCH, FLOAT, HORIZONTAL MOUNT	1
103	4091241	HOSE BARB, 1.5", VACUUM	1
104	4098691	HOSE, 1/4 MPT X 1/4 FPT, 80" LONG	1
105	4099851	TRIM, CONTROL PANEL, EXTRACTOR	1
108	4099291	SWITCH, ROCKER, SPLASH PROOF	3
109	9120715	10 - 32 x 1/2 PAN HEAD PHILIPS SCREW (PK 5)	1
110	4099471	GAUGE, 2000PSI, PANEL MOUNT, 1200	1
111	9120140	#6 X 5/8 PAN HEAD SHEET METAL SCREW (PK 3)	2
113	4098221	LIGHT, LED, RED, 220 VOLT	1
114	4098471	PANEL, 3 SWITCH, W/GAGE, NO HOUR METER, RALLY1200	1
115	2795851	FITTING, 90 DEGREE, STREET ELBOW, 1/4 NPT	2
117	4099171	FITTING, 90 DEG, STREET ELBOW, 1/4NPT, LOW PROFILE	1
118	4099991	FITTING,COUPLER,1/4FNPT, BRASS	1
119	4099171	FITTING, 90 DEG, STREET ELBOW, 1/4NPT, LOW PROFILE	1
120	2795861	FITTING, STREET ELBOW, 45 DEGREE x 1/4" NPT	2
121	9123000	11" LONG WIRE TIE (PK-5)	2
122	4099531	SCREEN, INTAKE, VAC MOTOR, SPOTTER	1
123	4099711	FILTER, INTAKE, EXTRACTOR	1
124	9121212	#12 x 1/2 PHILIPS HEAD SHEET METAL SCREW (PK 6)	6

SOLUTION TANK ASSEMBLY 240 VOLT

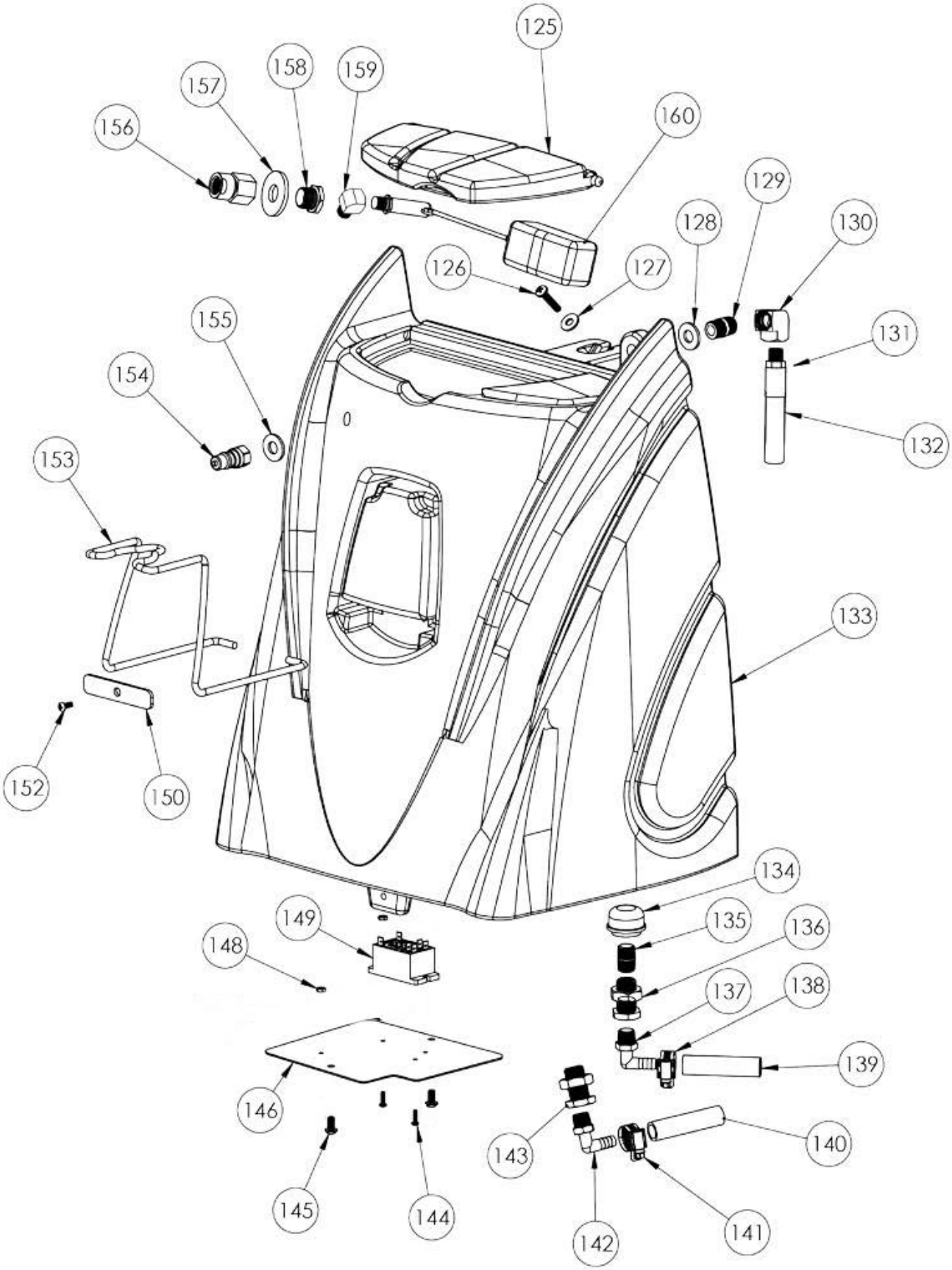

SOLUTION TANK ASSEMBLY 240 VOLT

ITEM	PART NO.	DESCRIPTION	QTY
125	4099041	LID,SOLUTION TANK,12GAL,BLACK	1
126	9121146	1/4-20 X 1-1/4 ROUND HEAD PHILIPS (PK 2)	1
127	9121390	11/32 ID X 11/16 0D FLATWASHER 5/16 (PK 10)	1
128	9122450	1/2 SAE FLAT WASHER STAINLESS (PK 5)	1
129	4098991	FITTING, PIPE NIPPLE,1/4MPT X 1-1/2	1
130	3891141	FITTING, BRASS ELBOW, 90 DEGREE X 1/4" NPT	1
132	4098681	HOSE, 1/4 MPT X 1/4 FPT, 58" LONG	1
133	4099051	TANK, SOLUTION, 12 GAL, GREEN	1
134	4099861	FILTER, 1/4" PIPE, ACORN,EXT	1
135	4096041	FITTING, CLOSE NIPPLE, 1/4 MNPT	1
136	4098981	FITTING, BULKHEAD, 1/4 NPT	1
137	4099001	FITTING, 1/4 MNPT - 1/2 BARB, 90 DEGREE, BRASS	1
138	2392141	HOSE CLAMP 11/16 to 1 1/4 DIA	1
139	4098351	HOSE,1/2 SOL TANK-PUMP,67"LONG	1
140	4098331	HOSE,1/2,UNLOADER-SOL TANK,30"	1
141	2392141	HOSE CLAMP 11/16 to 1 1/4 DIA	1
142	4099001	FITTING,1/4 MNPT-1/2 BARB, 90 DEGREE, BRASS	1
143	4098981	FITTING, BULKHEAD, 1/4 NPT	1
144	9120075	6-32 X 5/8 ROUND HEAD PHILIPS M/S (PK 10)	2
145	9121045	1/4-20 X 1/2 ROUND HEAD PHILIPS (PK 10)	2
146	4099651	COVER, ELECTRICAL COMPARTMENT	1
148	9120020	6-32 HEX NUT W/ STAR LOCK WASHER	2
149	4098251	RELAY, VACUUM MOTOR, 12GAL, 240 VOLT	1
150	4099641	PLATE, KEEPER, HOSE HOOK, UPPER	1
152	9121045	1/4-20 X 1/2 ROUND HEAD PHILIPS (PK 10)	1
153	4099601	HOOK, HOSE, UPPER	1
154	3590751	FITTING, 1/4" FNPT X 1/4 QD	1
155	9122450	1/2 SAE FLAT WASHER STAINLESS (PK 5)	1
156	4099941	FITTING, HOSE COUPLER, 3/4 FNPT, BRASS	1
157	4098571	WASHER, FLAT, 1", SS, SMALL OD	1
158	4099961	FITTING, BUSHING, 3/4 MNPT X 3/8 FNPT	1
159	4099951	FITTING, 45 DEGREE STREET ELBOW, 3/8 NPT, BRASS	1
160	4099931	VALVE, AUTO-FILL, COMPLETE, 1200	1

ACCESSORIES

4090509	TOOLKIT, EXTRACTOR, UPHOLSTERY, STAIR, HYDROGLIDE
4096841	4" WIDE UPHOLSTERY TOOL 500PSI
4093371	WAND, 2JET, EXTRACTOR, HYDROGLIDE
4097301	30" X 9 3/4 STAIR TOOL
4098069	TOOLKIT, EXTRACTOR, UPHOLSTERY, STAIR, 2JET SS WAND
4093251	WAND, 2 JET, STAINLESS STEEL
4096841	4" WIDE UPHOLSTERY TOOL 500PSI
4097301	30" X 9 3/4 STAIR TOOL
4098079	TOOLKIT, EXTRACTOR, DETAL, STAIR, CREVIC
4096851	3.5" DETAIL TOOL 500 PSI
4096871	18" INTERNAL SPRAY CREVICE TOOL
4097301	30" X 9 3/4 STAIR TOOL

4093371	WAND, 2JET, EXTRACTOR, HYDROGLIDE
4093251	WAND, 2 JET, STAINLESS STEEL
4097951	BRASS TRIGGER VALVE
4096841	4" WIDE UPHOLSTERY TOOL 500PSI
4097301	30" X 9 3/4 STAIR TOOL
4098491	TOOL, DETAIL, 4” CLEAR HEAD
4096851	3.5" DETAIL TOOL 500 PSI
4096871	18" INTERNAL SPRAY CREVICE TOOL
4090321	1.5" X 50' VACUUM HOSE

NSS® Enterprises, Inc.
3115 Frenchmens Road, Toledo, Ohio 43607
PHONE (419) 531-2121 FAX (419) 531-3761
mailus@nss.com www.nss.com