i-mop® XL

Auto scrubber for hard floor surfaces

User manual

EN

Model part No. :

1273254- SCRBR, [I-MOP XL, GLOBAL, CORD, CHARGER

For North America/International:

Tennant Company

10400 Clean Street, Eden Prairie,
MN 55344-2650
Telephone: (800) 553-8033
Internet: www.tennantco.com

For EMEA region:

Tennant N.V.

Industrielaan 6 5405 AB
P.O. Box 6 5400 AA, Uden -The Netherlands
Europe@tennantco.com

9030325
Revision: 03 (02/2025)

Preface

Thank you for choosing the i-mop® XL, the auto scrubber that cleans faster, cleaner, safer, greener, and is better for everyone. The i-mop® XL's compact design allows you to clean right to the edge and under obstacles, minimizing manual scrubbing. The battery operated i-mop® XL is equipped with two counter-rotating brushes that provide a deep scrub and a great cleaning result. The i-mop® XL significantly reduces the amount of water and chemicals needed which both leads to a greener result and reduces the risk of slippery floors. Please read this manual carefully for important information and operating instructions before using the i-mop® XL. Save this manual for future reference. This i-mop® XL will provide excellent performance. The best results will be obtained when the i-mop® XL is:

• Regularly maintained per the i-mop® XL preventive maintenance instructions in this manual.
• Operated with reasonable care and caution.
• Maintained with manufacturer-supplied parts.

Purpose of the user manual

The purpose of the user manual is to provide the user with information in such a way that during the life of the i-mop® XL, the machine is used correctly, efficiently and safely, even in the event of reasonably foreseeable misuse, as described in section 1.2 of this manual.

The user manual contains instructions regarding:

- Personal operator safety
- Intended and non-intended use of the i-mop® XL
- Instructions for daily use
- Maintenance instructions
- Storage conditions
- Disposal of the i-mop® XL

These instructions must be considered to avoid risks that could lead to physical and/or material damage.

Antimicrobial tanks

The tanks on the i-mop® use an antibacterial mix-in to make the plastic safer both inside and outside. Because it is mixed into the plastic, the effect will last the lifetime of the tank. The reduction of bacteria reduces the odours coming from the recovery tank and protects operators who handle the tank every day. Bacterial reduction in contact with the tank wall has been certified and tested at ≥99.99% efficacy.

Target audience

This user manual is intended for operators of the i-mop®XL and their supervisors, as well as partners and importers.

Operators of the i-mop® XL

The i-mop® XL may only be operated by a person who has correctly read and understood the instructions in this manual or is trained by an experienced operator who has read and understood the instructions in this manual.

Reading guide

The following symbols and terms are used throughout this manual to alert the reader to safety issues and important information:

Symbol	Term	Explanation
	INFORMATION	Read the instructions before using the machine.
	WARNING	Indicates a hazardous situation which, if the safety instructions are not followed, can lead to injuries of the operator or bystanders and light and/or moderate damage to the product or the environment.
	CAUTION	Indicates a hazardous situation which, if the safety instructions are not followed, can lead to light and / or moderate damage to the product or the environment.
	ATTENTION	Indicates a liability situation, where the manufacturer or its partners and affiliates cannot be held accountable for damages caused by non-compliance.
	STRONG MAGNET	Indicates that the machine contains strong magnets. These can cause pacemakers to stop working or cause electronic data to be damaged, such as information stored on access passes.
	PACEMAKER	Indicates that operators and maintenance crew wearing pacemakers should keep a minimal distance of 6 in / 15 cm. In this specific case operators may not use the machine as a backpack.
	BATTERIES	Indicates a battery-operated machine, batteries must be charged according to the instructions in the separate class I battery charger user manual. Batteries must be disposed of according to your local laws and regulations.
	SLIPPERY SURFACE	Indicates that the machine can cause floors to become slippery. In the workplace, it is advised to place slippery surface signs in these areas.

Content

Preface 2
Purpose of the user manual 2
Target audience .... 3.
Operators of the i-mop® XL....3
Reading guide 4
Content 5
1. Introduction 7
1.1. Intended use of the product.... 7
1.2. Non-intended use of the product.... 8
1.3. Lifespan.... 8
1.4. Modifications 8
1.5. Specifications 9
1.6. Warranty.... 10
1.7. Identification 10
2. Description 11
3. Safety....12
3.1. General safety instructions 12
3.1.1 Sweep before scrub 12
3.1.2 Brush condition 12
3.1.3 Machine orientation 12
3.1.4 Antibacterial tanks.... 12
3.1.5 Strong magnets.... 12
3.1.6 Battery.... 12
3.2. Risks during operation.... 13
3.2.1 Dress safely.... 13
3.2.2 Mark the job site 13
3.2.3 Careful when parking 13
3.3. Risks after operation.... 13
3.3.1 Remove battery 13
3.3.2 Machine orientation 13
3.3.3 Careful when storing 13
4. Transport and storage....14
4.1. General 14
4.2. Store position 14
4.3. Transport outside 15
4.4. Transport in a vehicle 16
5. Assembly and installation 17
5.1. Unboxing.... 17

5.2. Assembly 18
5.2.1 Charging the battery 18
5.2.2 Attaching the brushes 18
5.2.3 Attaching the squeegee 19
5.2.4 Installing the cleaning solution tank 20
5.2.5 Installing the recovery tank 20

6. Operation 21

6.1. Before you start 21
6.1.1 Before you start 21
6.1.2 Inserting the battery 22
6.1.3 Filling the cleaning solution tank 22

6.2. Operation procedure 23
6.2.1 Walking to the job site 23
6.2.2 At the job site 24
6.2.3 ECO mode 29
6.2.4 Turning off the i-mop® XL 30
6.2.5 Emptying tanks 29

6.3. Cleaning and storage 31
6.3.1 Flushing the system 31
6.3.2 Cleaning the tanks 31
6.3.3 Cleaning the filter and floatshutoff 32
6.3.4 Removing the battery 34
6.3.5 Checking the brushes and squeegee 35
6.3.6 Store in an upright position 35

7. Maintenance 36

7.1. Brush replacement 36

7.2. Squeegee replacement 37
7.2.1 Detaching the squeegee 37
7.2.2 Flipping/replacing the squeegee blade 37
7.2.3 Attaching the squeegee 38

7.3. Replacing the vacuum hose 37
7.4. Cleaning the particle filter 38

7.5. Recommended additional cleaning 39

7.6. Recommended service time 40

7.7. Accessories 40

8. Troubleshooting 41

9. Decommissioning and disposal 42

10. Partslist 42

1. Introduction

The i-mop® XL is a safe, user-friendly machine. This manual helps you to get started and explains the operation and maintenance procedure. You will be pleasantly surprised by the fast and effective use of the battery operated i-mop® XL. The batteries must be fully charged before use. Refer to the operating manual supplied with battery charger (p/n 1250527 or 1264257) for correct charging procedure.

This manual is intended for those who work with the i-mop® XL and/or perform daily maintenance. The manual must be read fully before the first actions. This manual describes the correct method of use, safety measures, maintenance and transport.

The manufacturer continuously improves all their products based on user experience and feedback. Any deviations between the texts and/or images from the manual and your i-mop® XL can therefore arise from the difference in model or from possible changes due to continuous development and innovation.

1.1. Intended use of the product

The i-mop® XL is a specialized machine for scrubbing hard floor surfaces. You can use any type of water-based scrubbing detergent.

Solution tank caps and brush lockers come in HACCP color coded versions (blue,green,red,yellow) See section 10. Parts. This allows you to use different cleaning solutions and brushes per cleaning application. For example, when you move from a food preparing area within a restaurant, simply exchange the tank and brush by color matching.

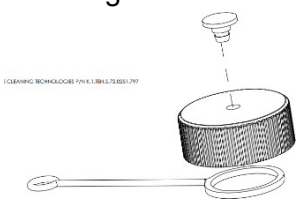

Tank Cap

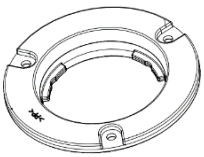

Brush locker

Figure 1

1.2. Non-intended use of the product

WARNING

Non-intended use can have consequences for the safety of operators and bystanders and will void the warranty on the product.

- NEVER operate the i-mop® XL near flammable dusts, liquids or vapors.
- NEVER operate the i-mop® XL when flammable or poisonous liquids like gasoline, oil, acids, or other volatile substances are on the floor.
- DO NOT fill the i-mop® XL with any flammable detergent. ONLY use the water-based cleaning solutions.
- DO NOT use water that exceeds 113°F / 45°C. Using water warmer than this temperature will void the tank warranty.
- DO NOT use cleaning solutions with a pH level below 2 or above 11 in order to prevent damage to sensitive components.
- DO NOT use the i-mop® XL outdoors or on uneven surfaces.
- DO NOT operate this i-mop® XL over electrical floor outlets in order to avoid electrical shock.
- NO RIDERS! Do not carry passengers on top of the i-mop® XL.
- DO NOT use the i-mop® XL as stepladder or platform.
- DO NOT store the i-mop® XL outside in order to avoid damage to electronic components.
- ONLY use manufacturer-supplied parts for maintenance.
- KEEP AWAY from children! The i-mop® XL is a professional cleaning machine to be used by trained adults only.

1.3. Lifespan

Each i-mop® XL is guaranteed to operate for at least 2000 hours. The wear on brushes and squeegee heavily depends on the roughness of the surface. They need to be checked regularly.

CAUTION

To ensure proper and safe operation throughout the life of the i-mop® XL, the machine must be checked by an authorized service provider every 500 hours..

1.4. Modifications

It is not permitted to make modifications to the design of the i-mop® XL without consultation and permission from the manufacturer. This affects the warranty, see section 1.6 of this manual.

1.5. Specifications

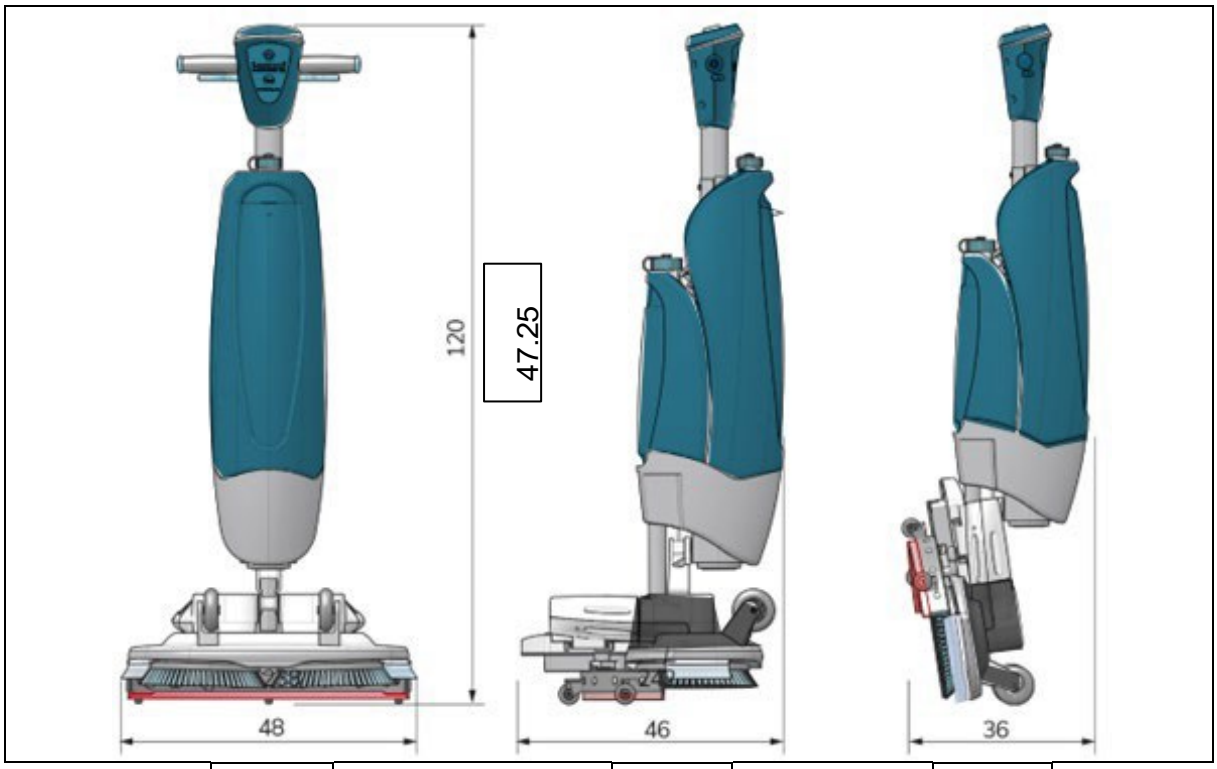

Figure 2

18.89 | 18.11 | 14.17

Product size:	120 x 48 x 46 cm | 47.25”x 18,89” x 18,11”
Product size in store position:	120 x 48 x 36 cm | 47.25”x 18,89” x 14.17”
Weight (including batteries):	23.6 kg | 52 lbs
Li-on battery:	DC (25.2V, 9Ah, 222Wh)
Battery capacity:	2 batteries (i-power 9)
Operation time of batteries:	90 min (i-power 9) / 140 min (i-power 14)
Brush pressure:	22.5 kg | 48.4 lbs
Brush speed:	350 RPM
Detergent tank capacity:	4 L | 1.05 gal.
Recovery tank capacity:	6 L / 4 L recommended max | 1.58 to 1.05 gal.
Vibration:	Amplitude (mm): <0.4442 Velocity (m/s): <0.008 Acceleration (m/s²): 0.943
Noise level (1m):	68.0 dB((Brush only) 70 dB (Vac Low) 72 (Vac High)
Theoretical performance:	Up to 1800 m^2 p/h | 19,375 sq ft p/h
Practical performance:	1000 - 1300 m^2 p/h | 10,763-13,993 sq ft p/h
Scrub deck anti-corrosion coating:	YES
Castor wheels:	YES
Power cut off at store position:	YES
Angle power cut off:	YES < 32°
Floating ball for recovery tank:	YES

1.6. Warranty

The i-mop® XL should be used as intended and described in this manual. Using the i-mop® XL outside will void the warranty on the product.
Fill out the supplied machine installation/warranty report and send to Tennant.

1.7. Identification

The ID tag, containing a serial number and production number, can be found on the bar behind the wastewater tank.

1. Serial number plate under the deck: (fig. 3)

Figure 3

2. Label behind the recovery watertank:

   (fig. 4)

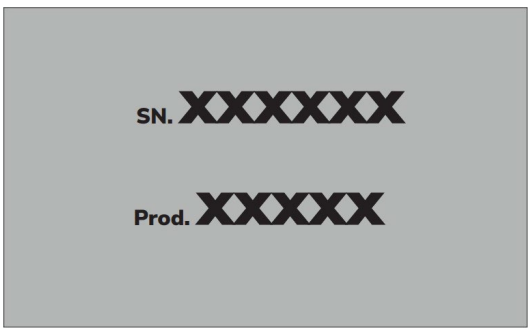

Figure 4

2. Description

The compact i-mop® XL consists of two main parts:

- The body that contains the motor, cleaning solution tank, recovery tank, handle with triggers and control panel.
- The scrub deck that contains the brushes and squeegee.

The i-mop® XL can be folded into a store position; this is recommended for storage.

The i-mop® XL consists of:

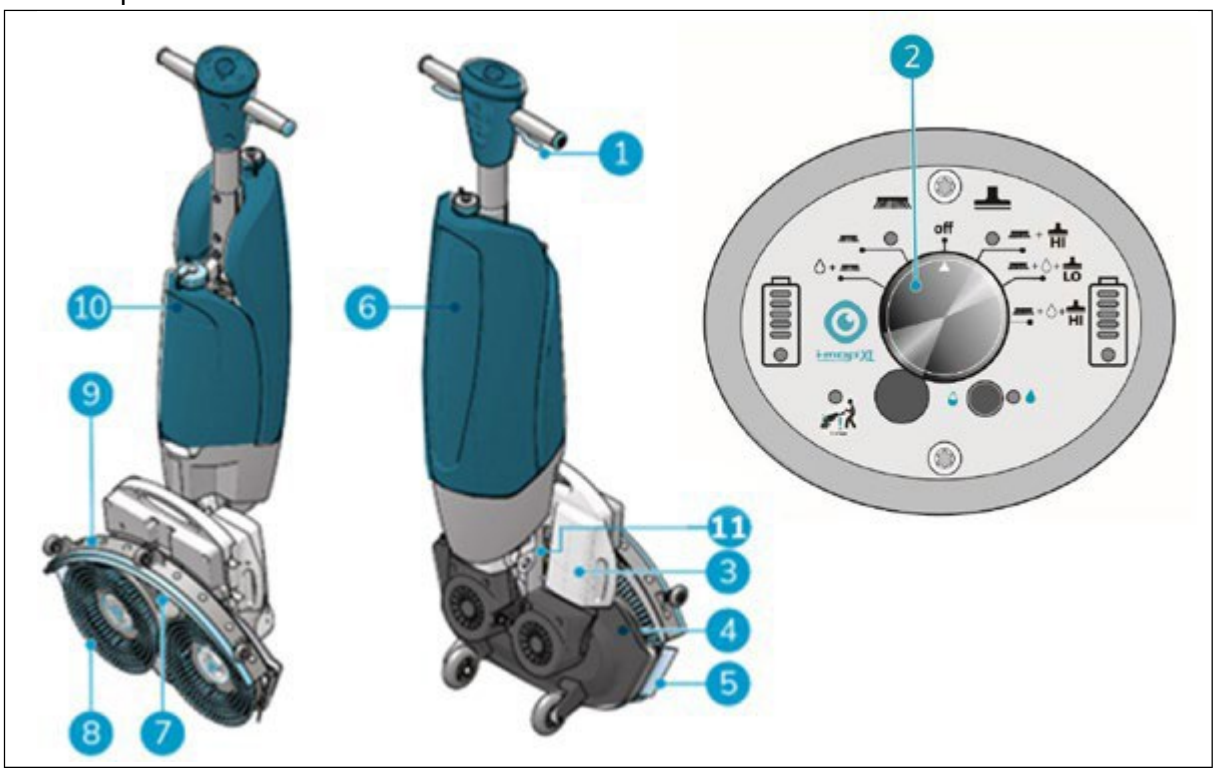

Figure 5

Legend

1. Trigger
2. Control panel
3. Batteries
4. Scrub deck
5. Splash guard
6. Recovery tank
7. Vacuum hose
8. Rotating brushes
9. Squeegee
10. Solution tank
11. I-balancer

3. Safety

Safety comes first. Therefore, please take your time to read and understand these safety instructions. Improper use can case cause harm or void the manufacturer's warranty.

3.1. General safety instructions

3.1.1. Sweep before scrub

Remove loose objects from the floor that can be propelled by or caught in the rotating brushes.

3.1.2. Brush condition

Make sure to check the condition of the brush before use. Change the brush only when the machine is turned off and in the stored position.

3.1.3. Machine orientation

Always keep the body of the i-mop® XL in an upright position when inserting cleaning fluid or battery.

3.1.4. Antibacterial tanks

Always keep the antibacterial tanks of the i-mop® XL out of direct sunlight. This can cause discoloration.

3.1.5. Strong magnets

CAUTION

Please be aware of the integrated magnets that hold the fluid tanks in place and on the scrub deck.

WARNING

Operators and maintenance crew wearing pacemakers should keep a minimal distance of 6 in/15 cm.

3.1.6. Battery

Always use the automatic battery charger provided by the manufacturer.

CAUTION

During normal operation, the 25V battery cause no safety hazard on their own. Please adhere to the following safety instructions regarding the battery:

- Do not crush, pierce or damage in any way.
- Do not heat or incinerate.
- Do not short-circuit.
- Do not dismantle.
- Keep dry.
- Only charge between 5°C~40°C / 41°F~104°F.
- Only use between 5°C~45°C / 41°F~113°F.

3.2. Risks during operation

3.2.1. Dress safely

Do not wear a necktie, scarf, or any loose or dangling clothing or jewelry of any type while operating this i-mop® XL. These types of clothing or jewelry could become tangled in rotating parts, causing serious injury or death.

3.2.2. Mark the job site

WARNING

During operation the cleaning solution can cause slippery patches on the floor. Therefore, it is advised to mark the job site with a wet floor marker to warn passers by.

3.2.3. Careful when parking

Do not park the i-mop® XL on ramps or slopes. Always park the i-mop® XL on a level, hard surface.

3.3. Risks after operation

3.3.1. Remove battery

Remove the battery before executing any maintenance task, or before storage.

When the batteries are being charged, do not leave them permanently on the charger.

3.3.2. Machine orientation

Always keep the body of the i-mop® XL in the stored position when replacing brushes or squeegee. (See section 4.2 store position)

3.3.3. Careful when storing

Do not store the i-mop® XL on ramps or slopes. Always store the i-mop® XL on a level, hard surface. Always store the i-mop® XL with scrub deck in the stored position.

4. Transport and storage

4.1. General

CAUTION

Always keep the body of the i-mop® XL in an upright position when filling the cleaning solution tank or inserting the battery.

Before storage or transport, drain the machine and remove the battery after each use.

4.2. Store position

CAUTION

Please be aware of the integrated magnet on the scrub deck.

The store position is the upright vertical position for storage and maintenance tasks.
The store position will disable the power to the machine. When placed in the store position, there will be a 3 minute delay before machine power is disabled for service and maintenance purposes. Unlike previous generations of i-mop, the i-mop XL will only power on when the scrub deck is lowered on the floor. When parked in its upright position, the i-mop XL will remain completely powered off to avoid unwanted battery discharge.

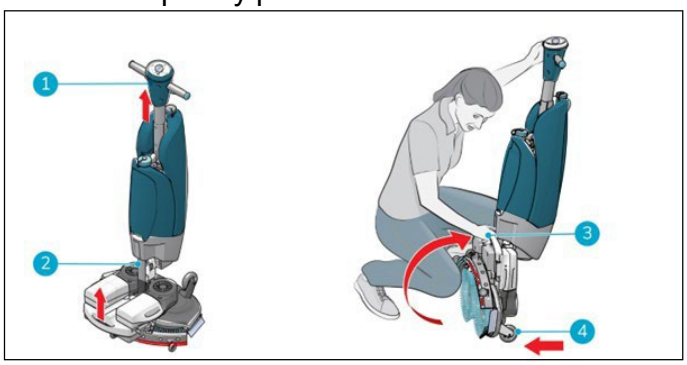

Figure 6

1. Make sure the vacuum hose (Figure 6 pos 2) is pushed back into the machine so it cannot get squeezed.
2. Crouch down and hold the handle (Figure 6, pos 1) with one hand while holding the scrub deck (Figure 6, pos 3) with your other hand.
3. Lift the scrub deck slowly until it stands upright on the front wheels (Figure 6, pos 4). Guide the body towards the scrub deck until it snaps into a resting position.

ATTENTION

Unlike previous generations of i-mop, the i-mop XL will only power on when the scrub deck is lowered on the floor. When in the stored position, the i-mop XL will remain completely powered off to avoid unwanted battery discharge. (The first 3 minutes there is no disabled power to the machine in parking position, for service and maintenance purpose)

4.3. Transport outside

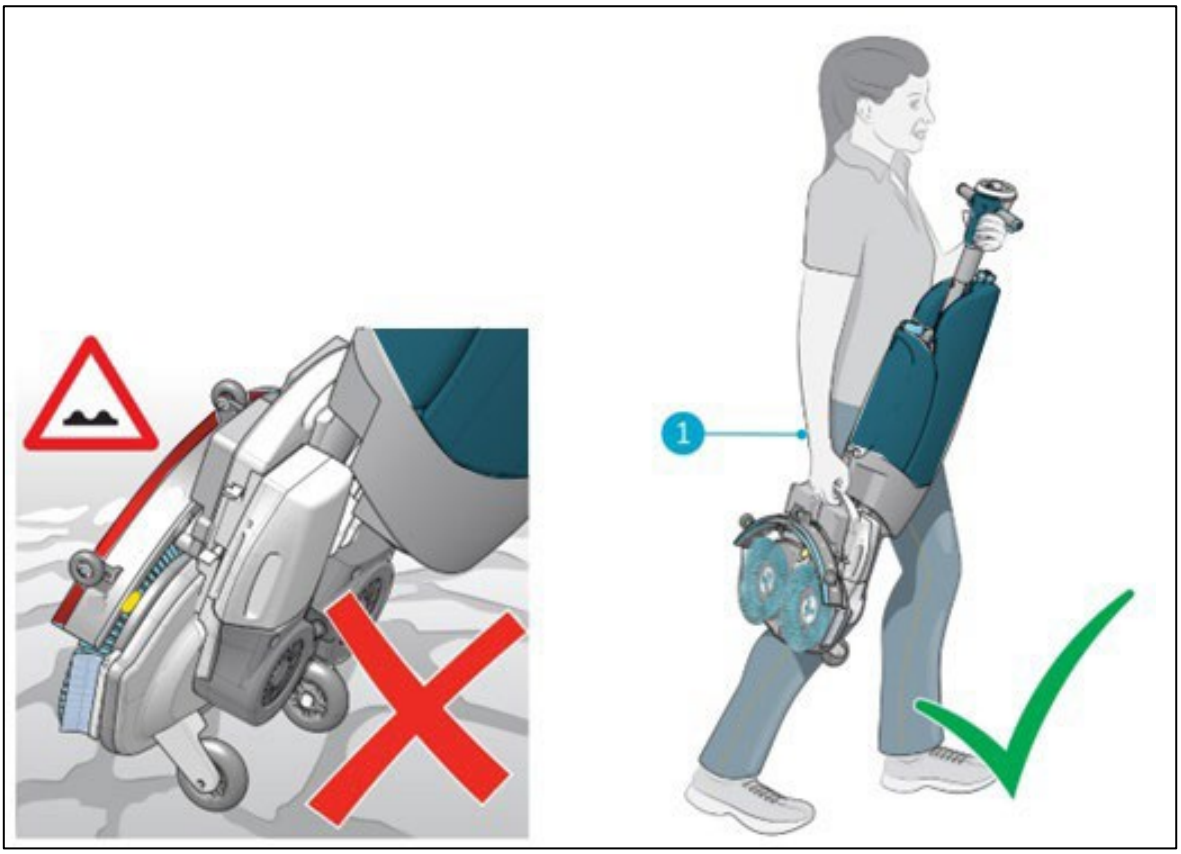

Figure 7

When outside:

1. Put the i-mop® XL in store position, see section 4.2.
2. Carry the i-mop® XL with one hand while holding the handle (Figure 7, pos 1) with your other hand.

CAUTION

The transport wheels are not designed to roll over dirty surfaces, sand can cause the wheels to block. Lift the i-mop® XL while moving it from one building to another.

CAUTION

Pay attention to proper lifting technique to avoid back strain and/or injury. Keep your back straight and make sure to lift it carefully.

4.4. Transport in a vehicle

The preferred way to transport your i-mop® XL is in an upright position and safely secured.

1. Make sure both tanks are empty.
2. Put the i-mop® XL in store position, see section 4.2.
3. Remove the batteries.
4. Lift the i-mop® XL into the vehicle.
5. Secure the i-mop® using a tension belt or another appropriate restraint (Figure 8, pos 1).

Figure 8

The i-mop® XL is a compact machine and fits in the trunk of your car. Before loading the i-mop® XL into your vehicle, make sure both tanks and the battery are removed.

1. Put the i-mop® XL in store position, see section 4.2.
2. Remove the battery and both tanks.
3. Set the i-mop® XL into a vertical/store position.
4. Prevent the i-mop® XL from moving around during transport by using a tension belt or another appropriate restraint.

CAUTION

The seal of the solution and recovery tank can be damaged during transport in horizontal position. Make sure you remove the tanks before loading the machine into your car. Improper use will void the warranty.

5. Assembly and installation

The i-mop® XL does not require much assembly. Most importantly, you will have to attach the brushes and squeegee.

5.1. Unboxing

The i-mop® XL body is packed in a single box. The battery and charger are delivered in a separate box within this packaging and can be ordered separately.

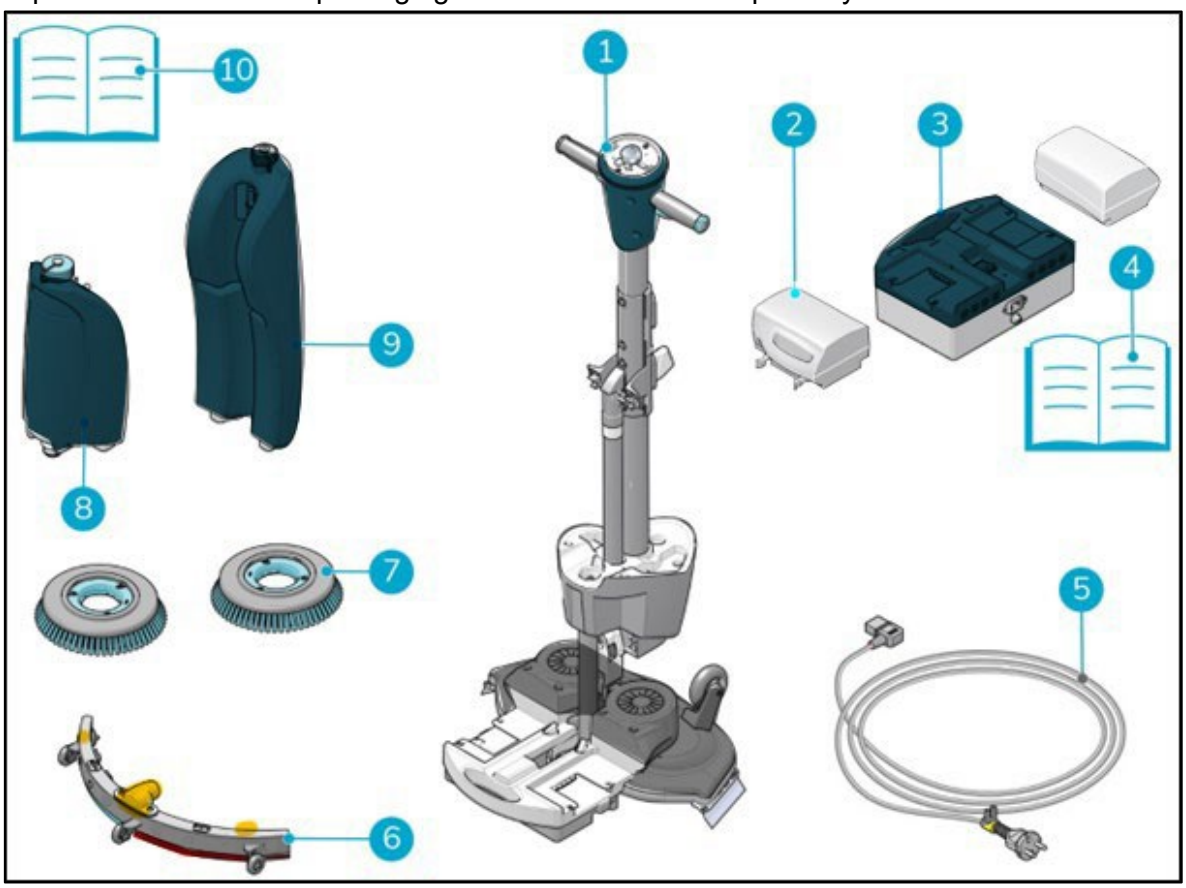

Figure 9

1. 1x i-mop XL main body
2. 2x batteries (i-power 9)
3. 1x battery charger (i-charge 2)
4. 1x battery charger manual
5. 1x power cord
6. 1x squeegee assembly (Linatex)
7. 2x brushes (Standard)
8. 1x cleaning solution tank
9. 1x recovery tank (anti microbial)
10. 1x this manual

5.2. Assembly

5.2.1. Charging the battery

Charge the battery according to the instructions in the battery charger manual. Make sure the battery is charged regularly.

5.2.2. Attaching the brushes

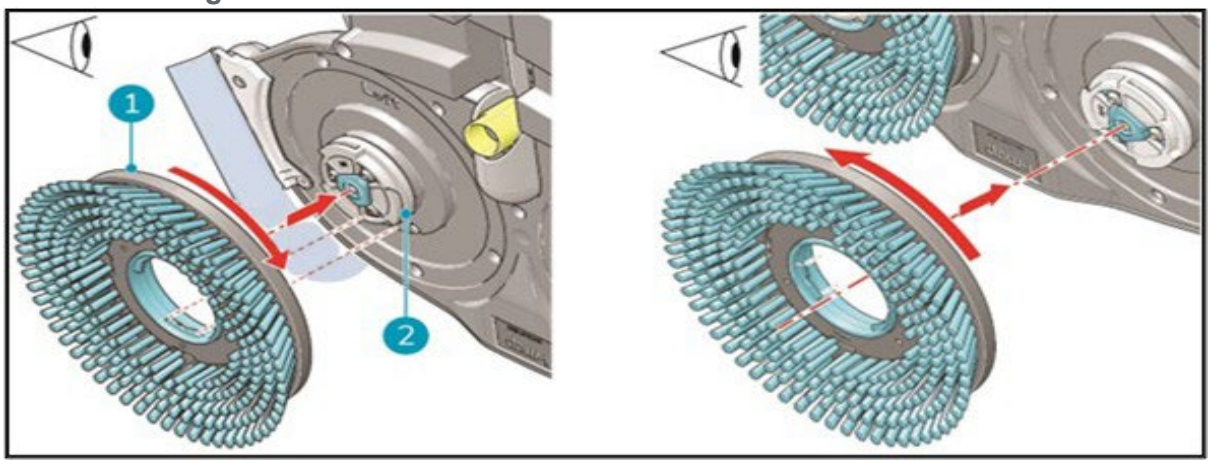

Figure 10

To attach the brushes:

1. Put the i-mop® XL in store position, see section 4.2.
2. Hold the scrub deck firmly with one hand.
3. Align the left brush (Figure 10, pos 1) with the left motor disk (Figure 10, pos 2). Align the latches and cut-outs in the brush and motor disk.
4. Push the brush on the motor disk.
5. Turn the left brush clockwise until you see the motor disk turning. The brush is now in place.
6. Align the right brush with the right motor disk. Align the latches and cut-outs in the brush and motor disk.
7. Push the brush on the motor disk.
8. Turn the right brush anticlockwise until you see the motor disk turning. The brush is now in place.

5.2.3. Attaching the squeegee

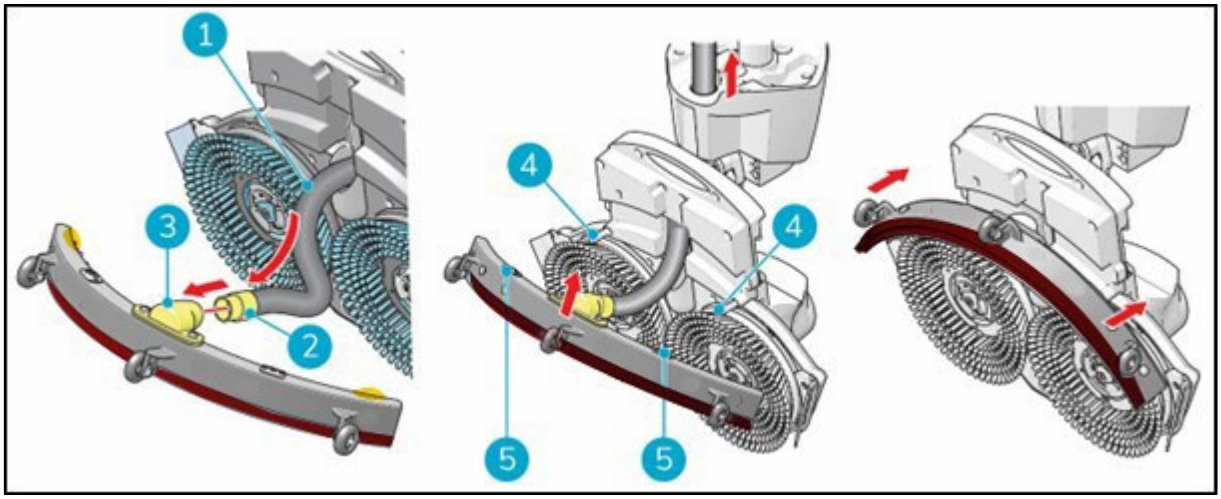

Figure 11

To attach the squeegee:

1. Take the vacuum hose (Figure 11, pos 1).
2. Insert the hose connector (11, pos 2) in the squeegee (Figure 11, pos 3).
3. Twist the hose connector 1/4 turn for a firm fit (Figure 11, pos 2).
4. Carefully pull the vacuum hose back into the machine.
5. Hold the scrub deck firmly with one hand.
6. Align the pins on the scrub deck (Figure 11, pos 4) with the holes on the squeegee (Figure 11, pos 5).
7. Push the left side of the squeegee in place.
8. Push the right side of the squeegee in place.

5.2.4. Installing the cleaning solution tank

1. Put the tank (Figure 12, pos 1) on the i-mop® XL with the valve first.
2. Press the tank downward on the nipple to open the valve seal.

Push the tank forward into place until you hear a ‘click’.

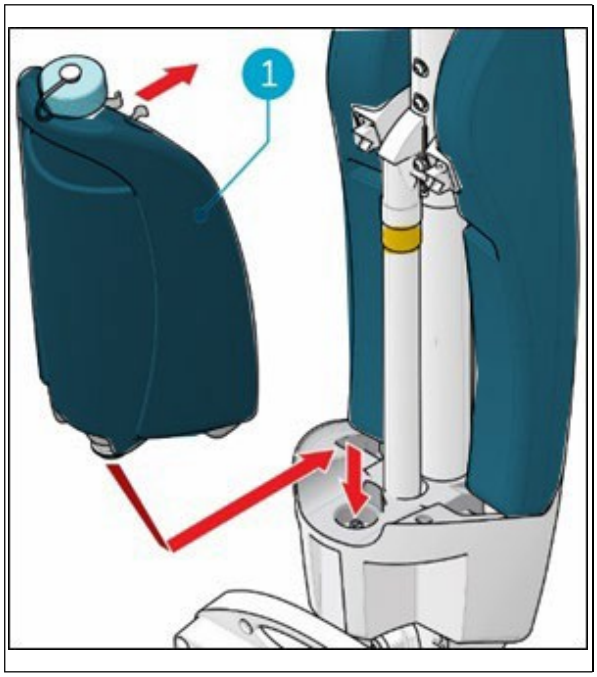

Figure 12

5.2.5. Installing the recovery tank

1. Put the bottom of the recovery tank (Figure 13, pos 1 and pos 3) on the front of the i-mop® XL.
2. Push the top of the tank into place until you hear a ‘click’ sound, the magnet (Figure 13 pos 2) will lock the recovery tank into place.

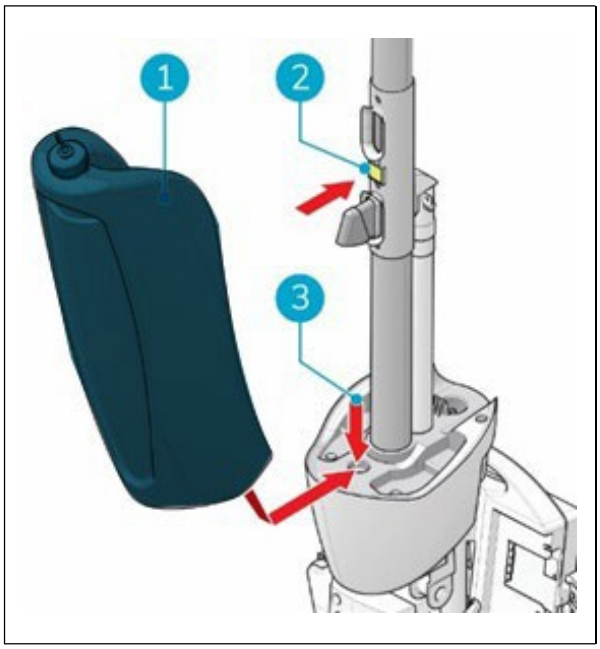

Figure 13

6. Operation

6.1.1. Before you start

Check the brushes and squeegee for wear and tear, see chapter 7 for maintenance instructions.

6.1.2. Inserting the battery

CAUTION

Only use i-power® batteries specifically designed for use in i-mop® devices.

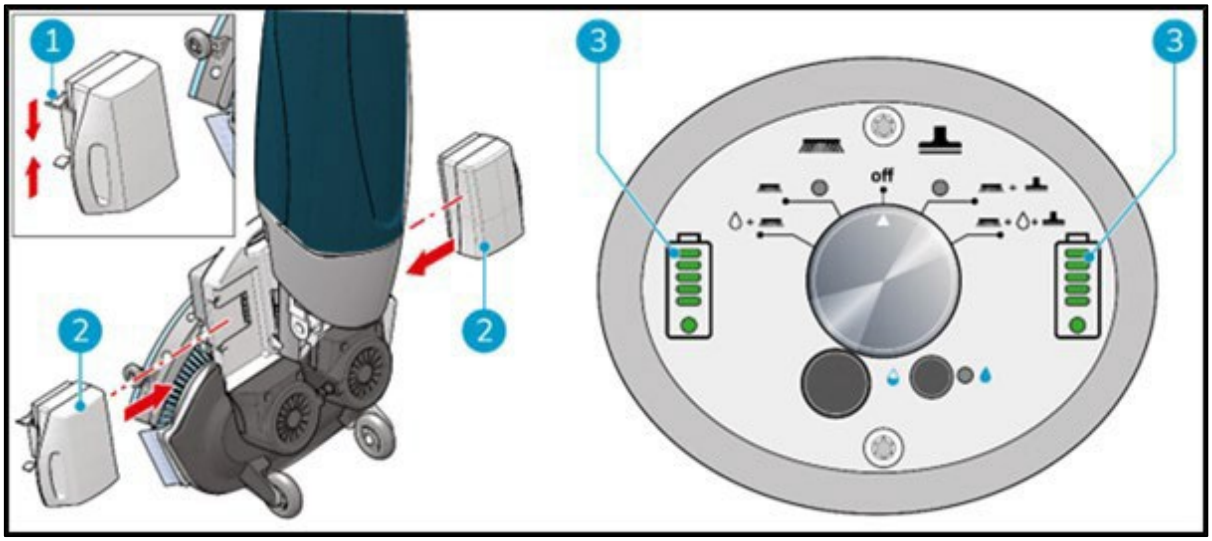

Figure 14

1. Push the blue coded battery (Figure 14, pos 2) in the blue battery slot. A click indicates that the battery is locked in place (Figure 14, pos 1).

2. Push the grey coded battery in the grey battery slot. A click indicates that the battery is locked in place.

3. During operation, the battery indicators (Figure 14,, pos 3) on the control panel show the amount of power left.

TIP:
It is not recommended to use the batteries when charged below 40% (2 marks).

6.1.3. Filling the cleaning solution tank

1. Remove the cap on the tank.
2. Pour in a maximum of 1 gal/ 4L of cleaning fluid.
3. Replace cap and make sure it seals tightly.
4. Put the i-mop® XL in store position, see section 4.2.
5. Put the tank on the i-mop® XL with the valve first (Figure 15, pos. 1)
6. Press the tank downward to break the valve seal.
7. Push the tank in place, the metal clip will lock the solution tank in place.
8. Clean your hands afterwards.

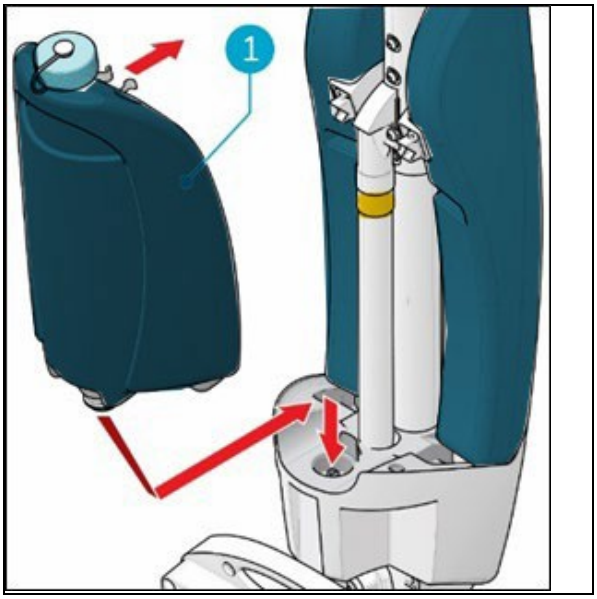

Figure 15

6.2. Operation procedure

6.2.1. Walking to the job site

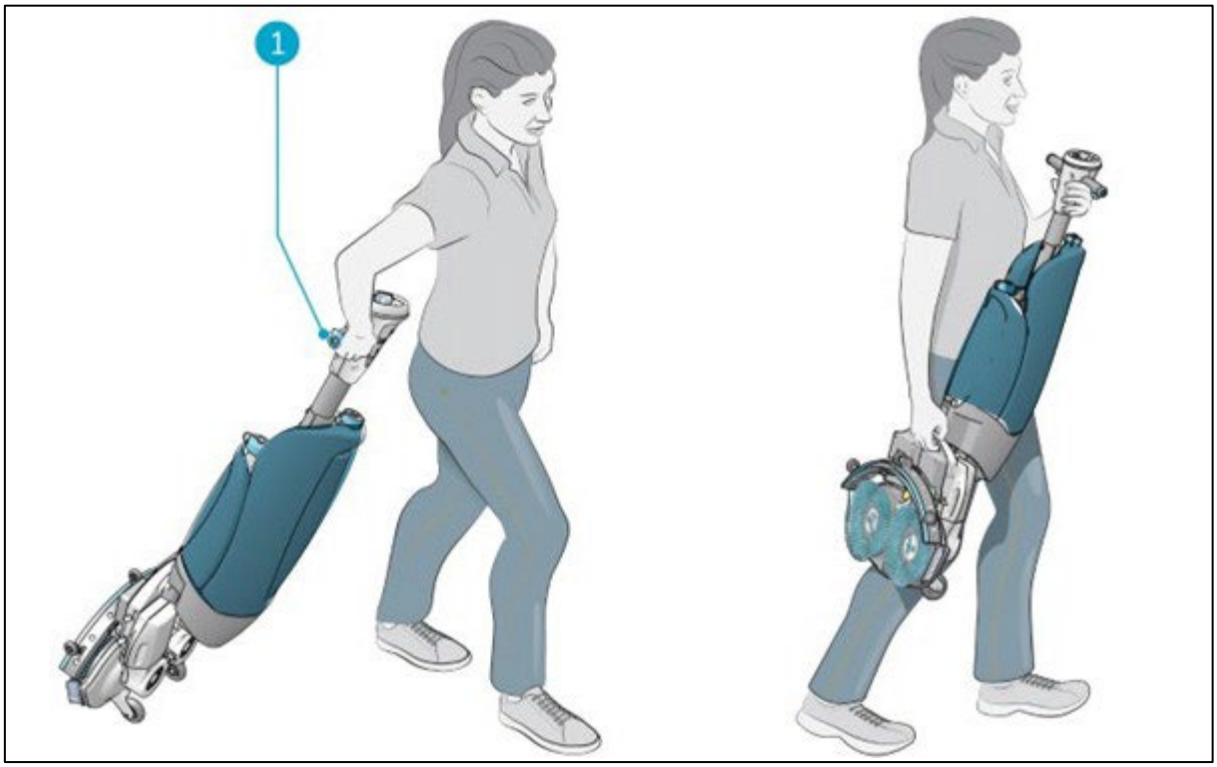

Figure 16

To move the i-mop® XL from one location to another one in a building:

1. Put the i-mop® XL in store position, see section 4.2.
2. Hold the handle with one hand (Figure 16, pos 1).
3. Don't forget to bring a wet floor marker.
4. Walk slowly and pay extra attention if you pull the i-mop® XL over obstacles.
5. To lift the i-mop® XL over obstacles, always use two hands.

- Hold the handle with one hand.
- Lift the scrub deck with the other hand.

6.2.2. At the job site

1. Crouch down while holding the scrub deck firmly with one hand (Figure 17, pos 2).

2. Push the handle forward with your other hand (Figure 17, pos 1).

3. Bring the scrub deck slowly down to the floor. This will enable power to the machine.

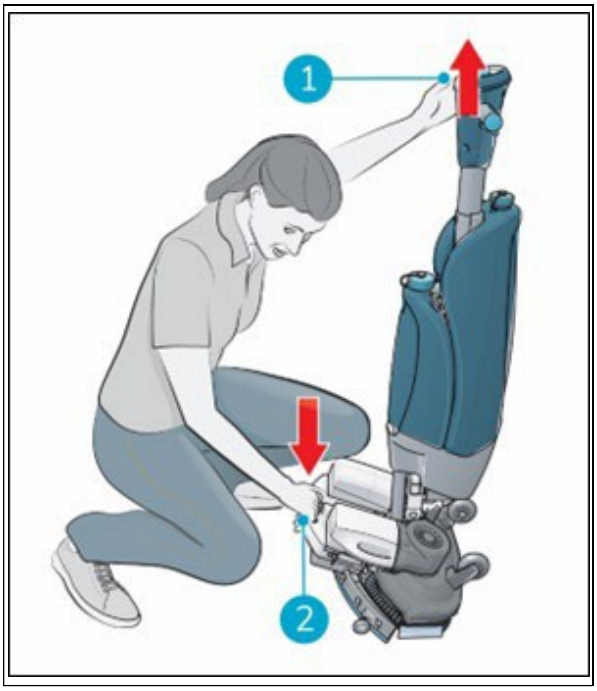

Figure 17

WARNING

Never push down the scrub deck with your foot.

ATTENTION

Unlike previous generations of i-mop, the i-mop XL will only power on when the scrub deck is lowered on the floor. When in the stored position, the i-mop XL will remain completely powered off to avoid unwanted battery discharge. (When placed in the store position, there will be a 3 minute delay before machine power is disabled for service and maintenance purposes.)

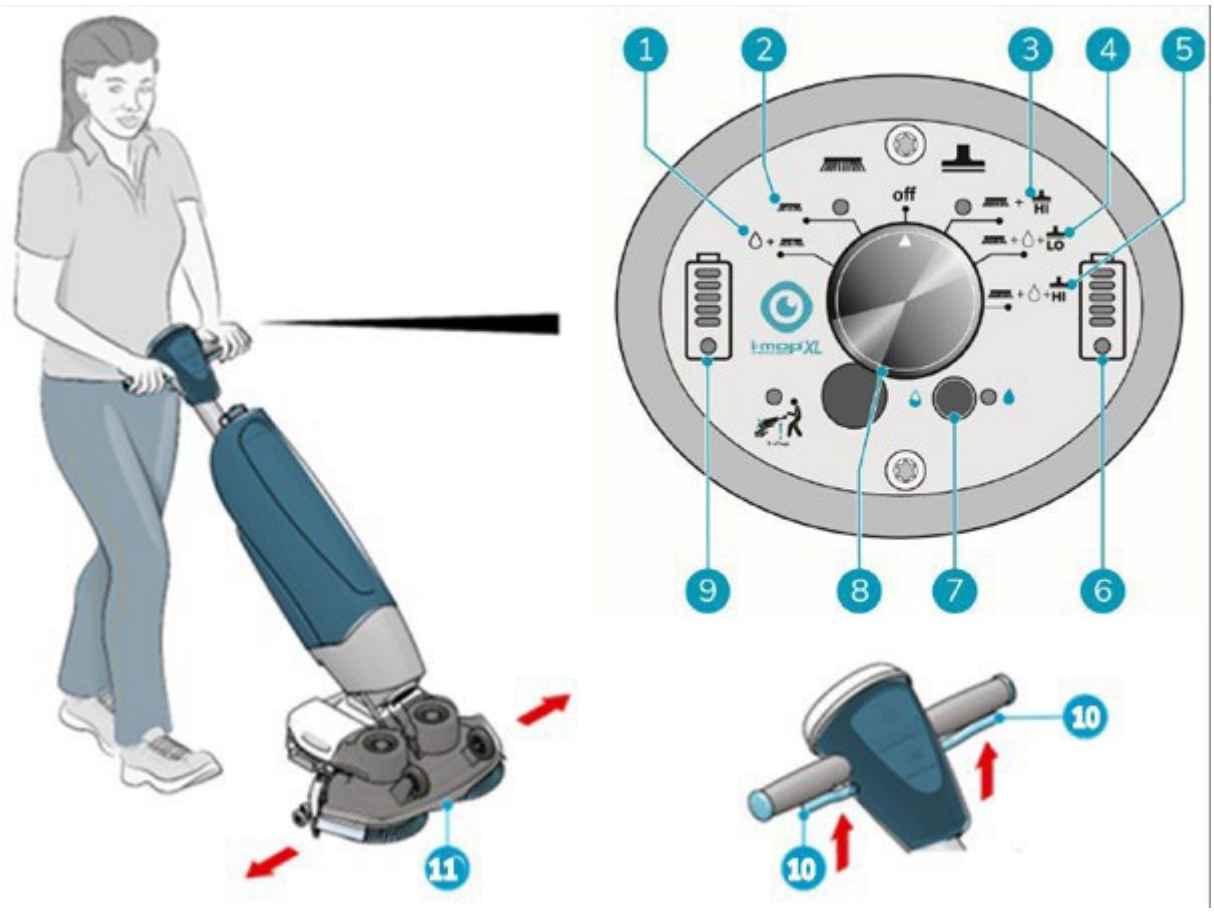

Figure 18

4. Stand behind the i-mop® XL . Choose your cleaning mode via the main switch (Figure 18, pos. 7). This will also turn on the i-mop XL . You can select the options independently or combined.

- MODE 1: Brush + water/cleaning solution (Figure 18, pos. 1).
- MODE 2: Brush only (Figure 18, pos. 2).
- MODE 3: Brush + vacuum (Figure 18, pos. 3).
- MODE 4: Brush + water/cleaning solution + Lo vacuum (Figure 18, pos. 4).
- MODE 4: Brush + water/cleaning solution + Hi vacuum (Figure 18, pos. 5).

5. Hold the handle with both hands.

6. Squeeze the trigger on the handle (Figure 18, pos. 10). This will also start the i-mop® XL.

7. Once the trigger is squeezed the i-mop XL will move forward.

8. Walk behind the i-mop XL.

9. Steer by gently turning the handle left or right to move the scrub deck (Figure 18, pos. 11).

10. Releasing the trigger (Figure 18, pos. 10) will immediately stop the i-mop XL . The vacuum motor will stop after 3 seconds.

TIP: Learn to swivel

Operating the i-mop® XL is very intuitive and like steering a bicycle. The i-mop® XL is designed to move forward. To turn, stop walking and use your inside hand (the hand in the direction you want to go to) to turn the handle. The i-mop® XL can swivel 360 degrees making it possible to reverse direction.

WARNING

Do not operate the i-mop® XL at more than an arm's length. Operating below a 32-degree angle can cause water to run into the vacuum motor. The shut off float ball filtration system prevent vacuum motor damage.

2. The i-balancer. (figure 19)

The i-balance system allows the i-mop to stand up and remain balanced in any position while operating the i-mop XL. Simply rest the i-mop in the position you like, and it will stay standing. The i-balance system also helps to support the weight of the machine using a tensioned spring.

* put the arm always back at storage position before parking the unit. (figure 20A).

* never store the machine using the i-balance system.

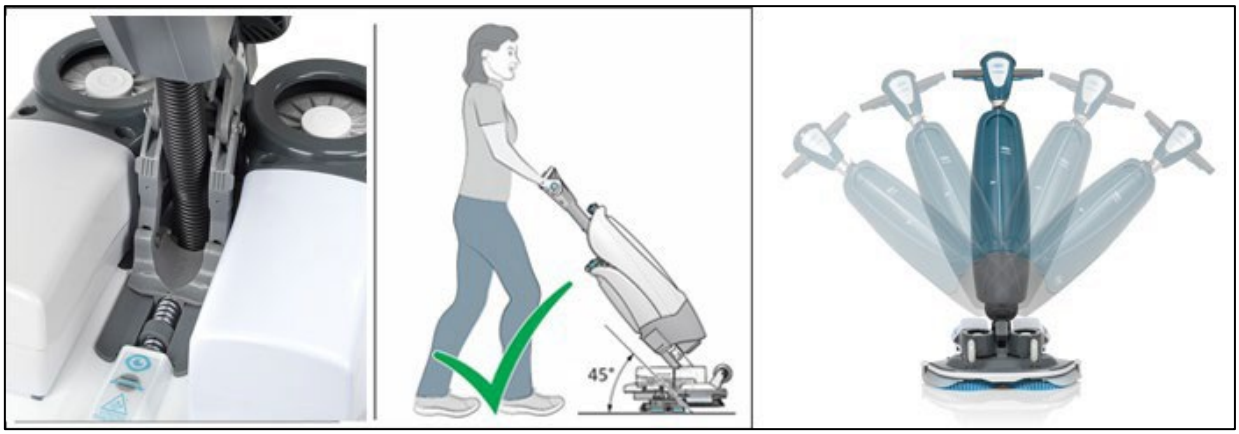

Figure 19

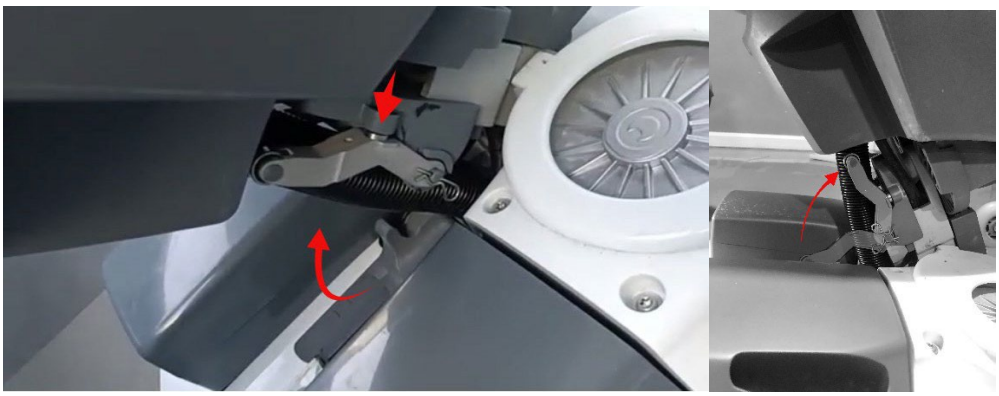

Figure 20A: bringing back in position before parking the unit.

3. For short term parking of the machine i-mop® has a built in timer to manage and guarantee it's durability on brushes. The operator shouldn't park the machine too long on it's brushes to avoid damage to the brushes. The display will start to light up as indicated in figure 20B. After 9.5 minutes the lights indicated on A,B,C,D start blinking.

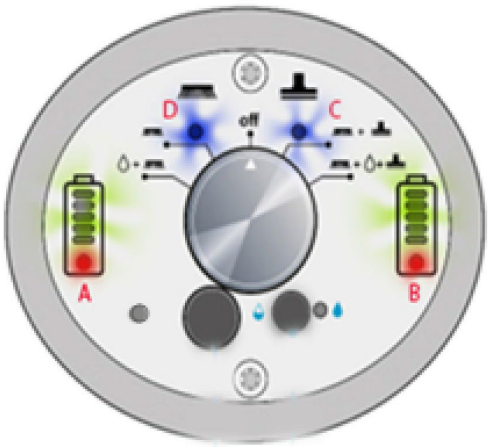

Figure 20B

12. After 9.5 minutes + 5 minutes the lights on the display A|B|C|D are off.
Within this time setting you are still able to operate the machine if you switch on the machine. After 1.5 minutes more the machine will be completely shut off and you are not able to work with the machine anymore. By lifting the deck and bringing the deck down again you will be able to work again when you switch the knob in the desired direction.

TIP: Use the i-balancer as a parking
For quick actions like cleaning a surface with a microfibre cloth or get something quickly out of the work cabinet, you can park the i-mop on the i-balancer. By doing this, the machine will stand on it's own and the user would be able to do some quick emergency tasks. To avoid brush damage there is a built in timer that will inform the user what to do. See step 11 and 12 (6.2.2.) what the lights are for.

6.2.3. Easy lift kit

WARNING

Walk slowly and pay extra attention when the lifter kit is activated. The floor remains wet. Make sure to mark the job site using a wet floor marker.

Activating the lifter kit will lift the squeegee up, to give detergents some dwell time.

1. Put the i-mop® XL Pro in store position, see section 4.2.
2. Push the lever (Figure 20C, pos. 1) following the arrow .
3. Pull the lifter kit down. The wheel will go down (Figure 20C, pos. 2).
4. Use the device as normal. Be careful the floor will remain wet.

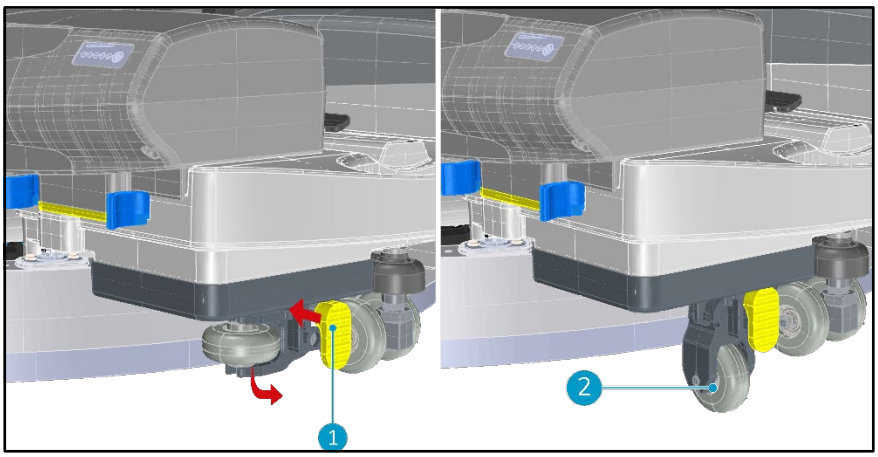

Figure 20C

Make sure to end cleaning of the jobsite with the lifter kit deactivated.

5. To deactivate push the lever.(Fig. 20C,1) The weight of the machine will push the lifter kit in.

6.2.4. ECO mode

1. The ECO mode will use 40% less cleaning solution.

2. Turn on the ECO mode by pushing the ECO button, after you have selected your cleaning mode. (Figure 21, pos 1).

3. Turn off ECO mode by pushing the ECO mode again.

4. To adjust water flow when ECO mode is activated, you can remove the rubber cap (Figure 21, pos 2) and use a small flathead screwdriver to change the flow rate on the dial below the cap. See flow rate table on the next page.

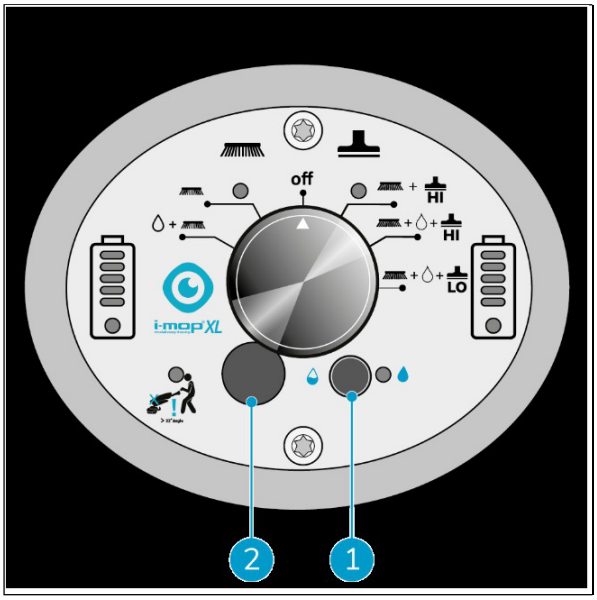

Figure 21

Standard flow: 250ml/minute

Arrow position	Water flow down time (Sec.)	Water stop tme (Sec.)	Water flow(ml/minute)	Remark
0	0.588	9.412	15	minimum flow rate water saving
1	1.176	8.824	29	
2	1.764	8.236	44	
3	2.352	7.648	59	
4	2.94	7.06	74	
5	3.528	6.472	88	
6	4.116	5.884	103	
7	4.704	5.296	118	
8	5.292	4.708	132	
9	5.88	4.12	147	
A	6.468	3.532	162	Standard flow rate water saving
B	7.056	2.944	176	
C	7.644	2.356	191	
D	8.232	1.768	206	
E	8.82	1.18	221	
F	9.408	0.592	235	Maximum flow rate water saving

Note that the flow rate is only affected when ECO mode is turned on.

6.2.5. Turning off the i-mop® XL

1. Use the i-mop XL main switch (Figure 22, pos 1) and choose MODE 3 Brush + Dry vacuum (Figure 22, pos 2).

2. Operate it about 15-20 feet / 2-4 meter farther to vacuum remaining cleaning solution up.

3. Then set the main switch to the OFF position.

Note that the vacuum motor will continue to run for approximately 3 more seconds.

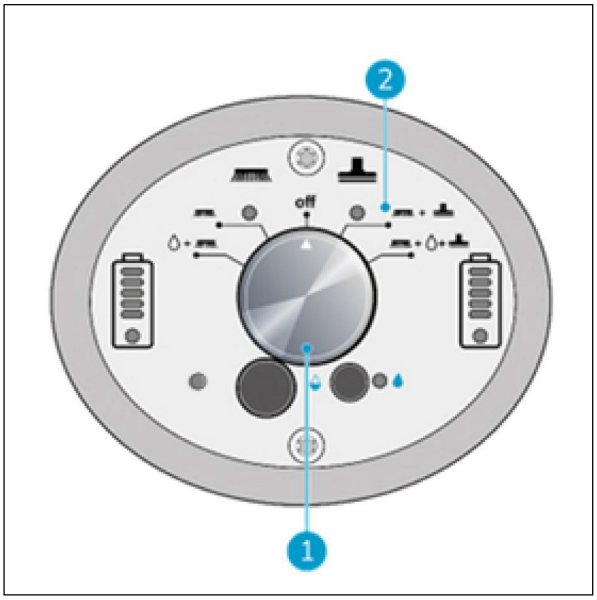

Figure 22

6.2.6. Angle warning indicator

1. The angle warning indictor will flash at the blue circled area as soon the operator will go below 32 degrees. The indicator light will turn on and the water recovery will be paused. When the handle is raised above 32 degrees the vac motor will restart after 5 seconds. (figure 23)

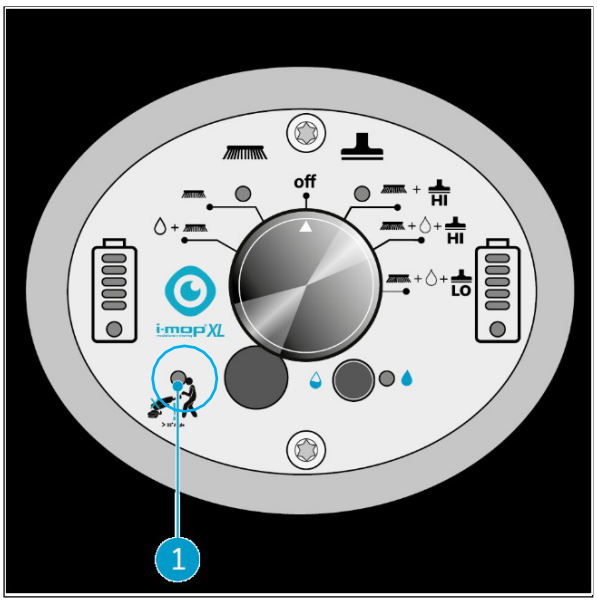

Figure 23

6.2.7. Emptying tanks

Dispose of water or cleaning solution from both tanks in an appropriate drain. Even though the recovery tank is bigger, empty it each time the cleaning solution tank is filled.

WARNING

Please observe the local provisions regarding solution disposal related to wastewater treatment.

6.3. Cleaning and storage

6.3.1. Flushing the system

Be sure to flush the tanks out completely to discard any remaining solution in the lines and valves:

1. Refill the solution tank with 2 to 4 cups / 0.5 to 1 liter of clean water.

4. Select the brush, cleaning solution and vacuum mode on the control panel. (Figure 24, pos2)

5. Use the trigger to start the i-mop® XL and allow it to flush the system.

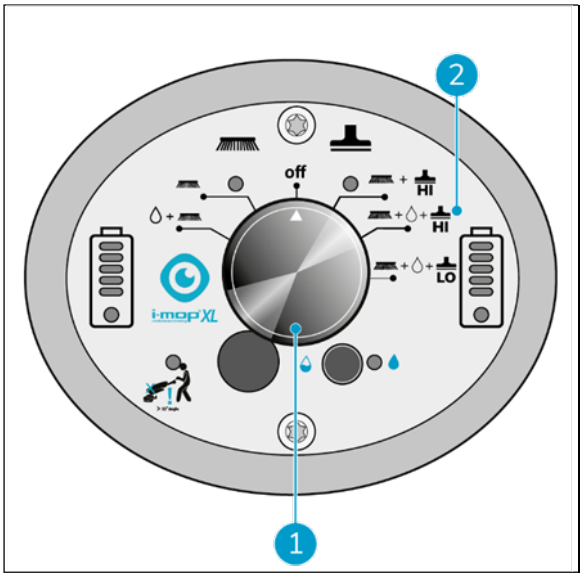

Figure 24

6.3.2. Cleaning the tanks

1. Dispose of water or cleaning solution from both tanks in an appropriate drain.

6. To clean the recovery tank thoroughly:

- Partially fill the tank with fresh water and hold it horizontally with the holes facing up.
- Tilt the tank repeatedly, thoroughly rinsing all the dirt and debris out from the tank.

7. To clean the solution tank, follow the same procedure.

TIP: Dry the tanks
Slightly open both tank caps before storage to allow the tanks to dry.

6.3.3. Cleaning the filter and floatshutoff.

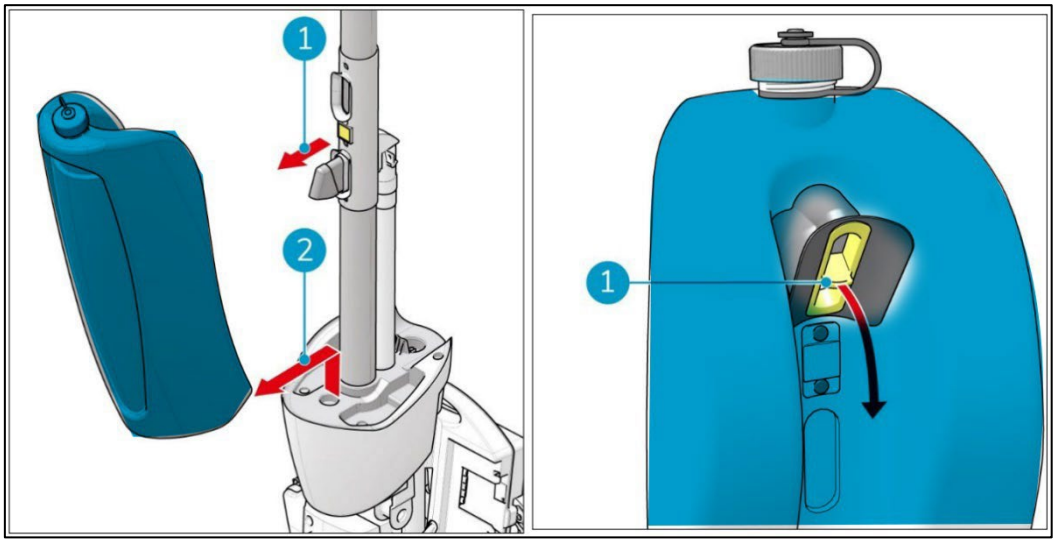

Figure 25 *Figure 26*

To clean the recovery tank and ball float shutoff assembly, you have to remove the recovery tank from the i-mop® XL

1. Pull the top of the recovery tank outwards (Figure 25, pos 1).
2. Lift the recovery tank up and move it away from the body of the i-mop XL (Figure 25 pos 2)
3. Grab the support frame of the ball float shutoff assembly (Figure 26, pos 1) between your index finger and your thumb and pull it outwards.

Taking apart the ball float shutoff.

8. Pull the support frame (Figure 27, pos 2) out of the rubber housing (Figure 27, pos 3). To do this, bend the rubber flaps (Figure 27, pos 1) outwards to release the 4 nocks of the support frame.

9. Pull the float ball housing (Figure 27, pos 4) out of the rubber housing. To do this, bend the rubber ring (Figure 27, pos 5) outwards to release the 4 nocks of the float ball housing.

10. The floating ball (Figure 27, pos 6) comes out

11. Rinse the parts with tap water. If required, clean with a brush (Figure 28, pos 1).

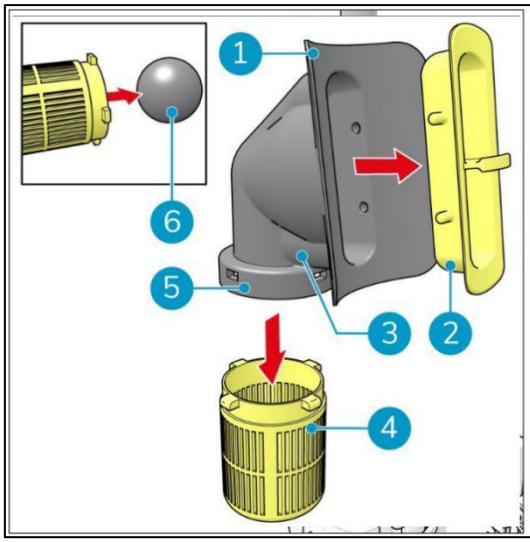

Figure 27

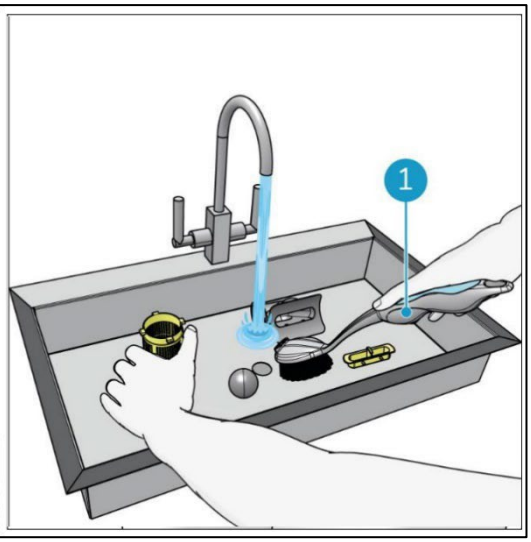

Figure 28

Assembling the ball float shutoff.

12. Place the floating ball in the float ball housing (Figure 29, pos 1).

13. Press the float ball housing (Figure 29, pos 4) into the rubber housing (Figure 29, pos 3). Make sure that the 4 nocks of the float ball housing fit into the holes in the rubber ring (Figure 29, pos 5).

14. Press the support frame (Figure 29, pos 2) in the rubber housing (Figure 29, pos 3). Make sure that the 4 nocks fit into the holes of the rubber housing.

15. Fill the recovery tank with approximately 1 liter of tap water (Figure 30, pos 1).

16. Carefully shake it and dispose of the waste water properly.

17. Place the ball float shutoff assembly back in the recovery tank, see Figure 30. Make sure that the support frame and rubber housing sit flush on the tank and seals it.

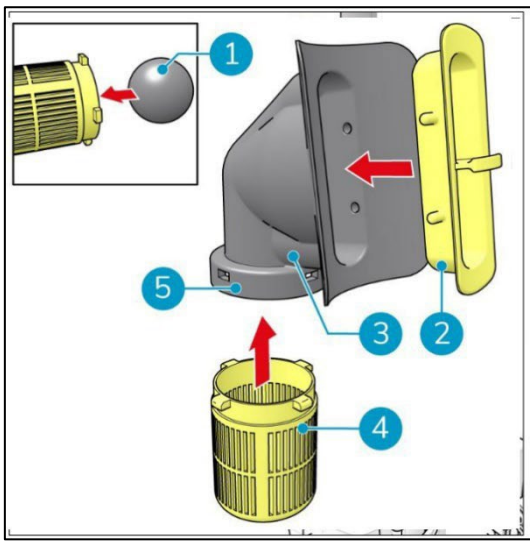

Figure 29

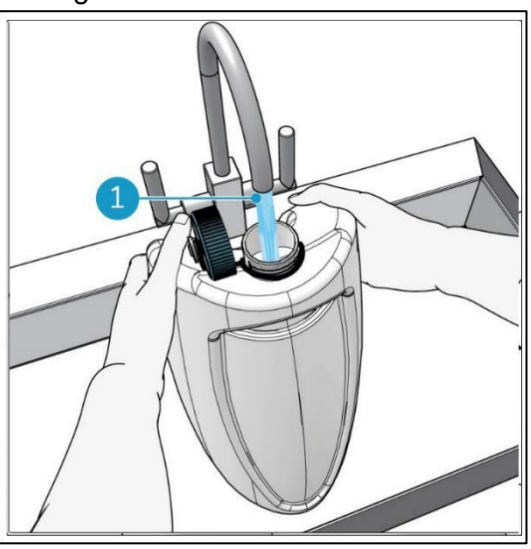

Figure 30

18. Put the bottom of the recovery tank (Figure 31, pos 1 and pos 3) on the front of the i-mop® XL

19. Push the top of the tank into place until you hear a "click" sound, the magnet (Figure 31, pos 2) will lock the recovery tank into place.

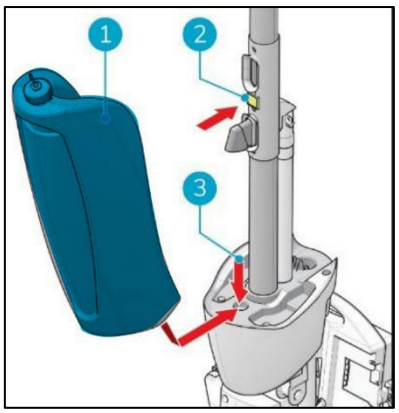

figure 31.

6.3.4. Removing the battery

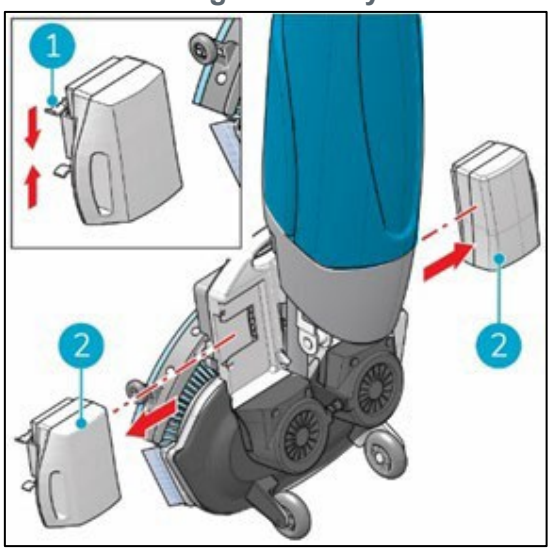

Figure 32

1. Put the i-mop® XL in store position, see section 4.2.

20. Hold the i-mop® XL by the scrub deck to stabilize.

21. Press the retaining clip inwards (Figure 32, pos 1)Battery will lift from its anchor, pull the battery away (Figure 32 ,pos 2).

22. When the i-mop® XL isn't used regularly, store the charged battery in a dry, clean place.

23. Make sure the battery is charged monthly.

6.3.5. Checking the brushes and squeegee

1. Check to see if both brushes are clean and intact, see section 7.1 for removal instructions.

- Clean them under fresh water or replace them if necessary.
- Replace brushes if the yellow wear indicator is the same height as other bristles.

24. Check to see if the squeegee is clean and intact, see section 7.2 for removal instructions.

- Clean it with fresh water and wipe it with a clean, damp cloth.
- Replace the squeegee blades when necessary.

6.3.6. Store in an upright position

1. Please ensure that the i-mop® XL is stored in a place where nobody can bump into it.

25. Put the i-mop® XL in store position, see section 4.2.

26. Store the i-mop® XL close to a wall (Figure 33, pos 1) with the handle pointing towards the wall and the brushes facing away from the wall.

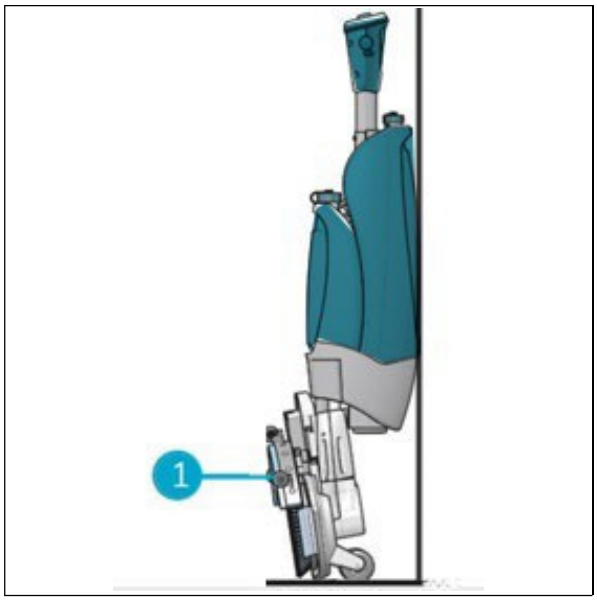

Figure 33

7. Maintenance

CAUTION

Remove the battery before executing any maintenance task.

CAUTION

Always keep the body of the i-mop® XL in an upright position when replacing the brushes or the squeegee.

7.1. Brush replacement

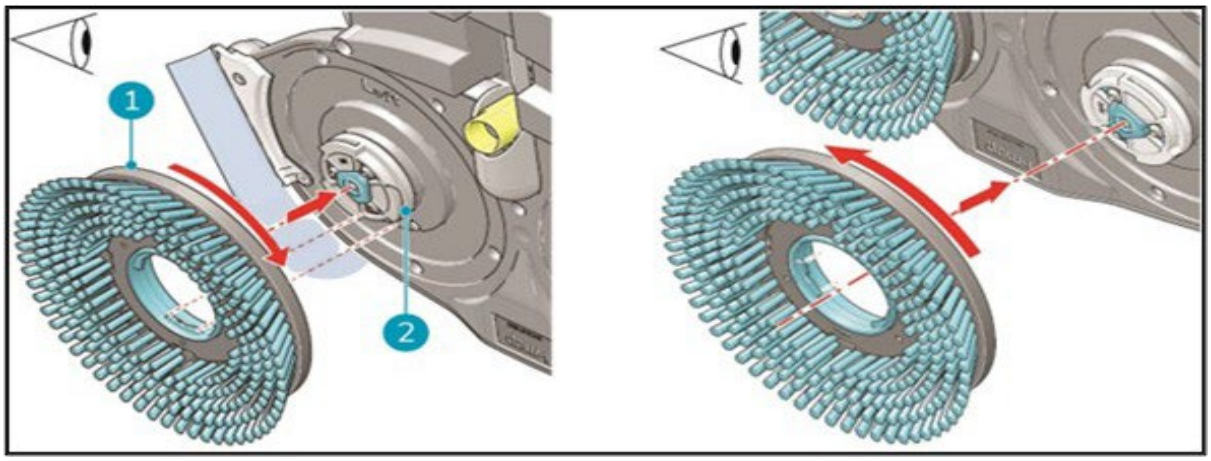

Figure 34

The brushes are attached to the scrub deck with a bayonet fitting.

1. Put the i-mop® XL in store position, see section 4.2.

27. Hold the scrub deck firmly with one hand.

28. Using your other hand to turn the left brush (Figure 34 , pos 1) anticlockwise until you feel resistance or see the motor disk turning as well.

29. Pull the brush towards you, off the motor disk.

30. Turn the right brush clockwise until you feel resistance or see the motor disk turning as well.

31. Pull the brush towards you, off the motor disk.

32. Visually inspect the motor disks.

33. Clean the i-mop® XL scrub deck with a clean, dry cloth before you install the brushes.

7.2. Squeegee blade replacement

The squeegee blades come in pairs and wear out over time. When you notice the floor is no longer being dried properly, replace the squeegee blades.

7.2.1 Detaching the squeegee

1. Put the i-mop® XL in store position, see section 4.2.

34. Hold the scrub deck firmly with one hand.

35. Pull on the left side of the squeegee (Figure 35, pos 1) to remove it.

36. Pull on the right side of the squeegee to remove it. (Figure 35 pos 2.)

37. Remove the vacuum hose from the squeegee by twisting the hose.

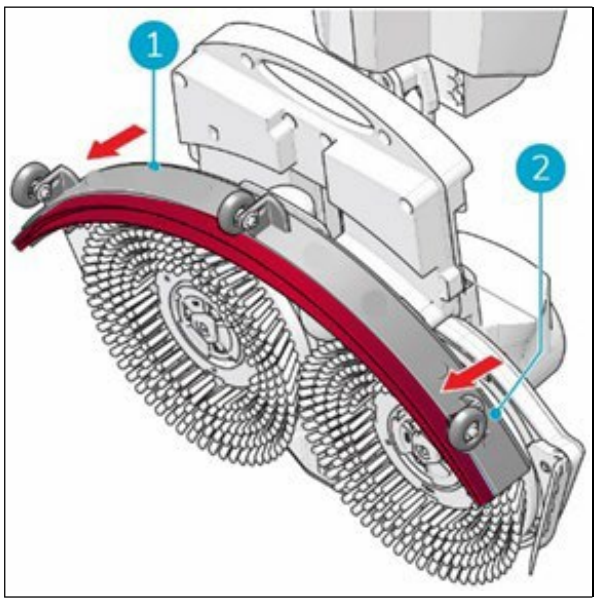

Figure 35

7.2.2. Flipping/replacing the squeegee blade

1. Press the two yellow buttons on top of the squeegee assembly

38. Take out the inner squeegee rubbers holder.

39. Once the central part is out, you can easily take off the rear rubber blade.

40. Replace the center part in the squeegee assembly

7.2.3. Attaching the squeegee

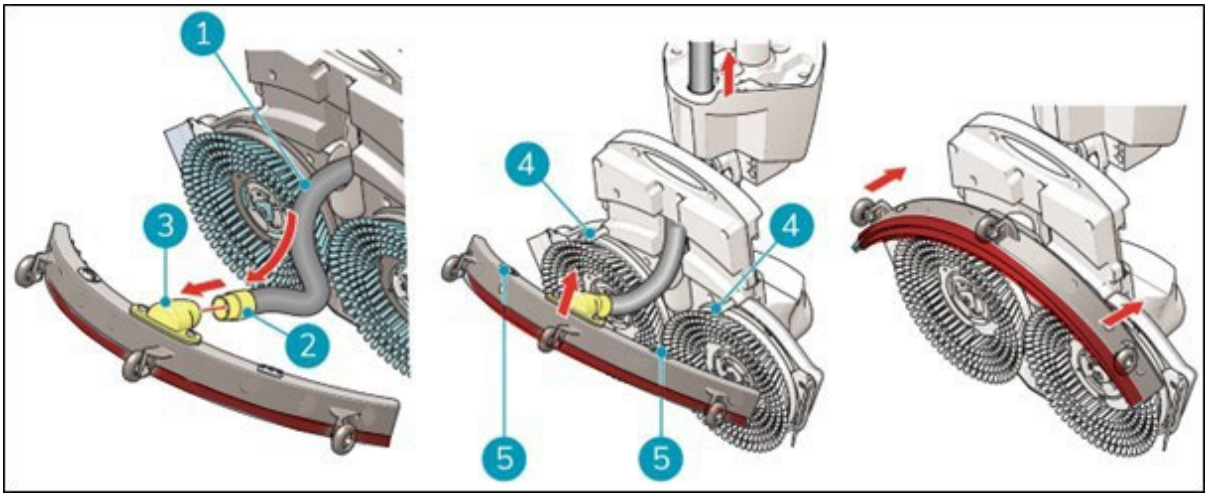

Figure 36

To attach the squeegee:

1. Take the vacuum hose (Figure 36, pos 1).
2. Insert the hose connector (Figure 36, pos 2) in the squeegee (Figure 36, pos 3).
3. Twist the hose connector 1/4 turn for a firm fit (Figure 36, pos 2).
4. Carefully pull the vacuum hose back into the machine.
5. Hold the scrub deck firmly with one hand.
6. Align the pins on the scrub deck (Figure 36, pos 4) with the holes on the squeegee (Figure 36, pos 5).
7. Push the left side of the squeegee in place.
8. Push the right side of the squeegee in place.

7.3. Vacuum hose replacement

1. Detach the squeegee as described in 7.2.

41. Remove the solution tank. You can see where the vacuum hose is connected at the i-mop® XL handle.

42. Hold the scrub deck firmly with one hand.

43. Detach the vacuum hose by twisting the connector 1/4 turn anticlockwise.

44. Now you can carefully pull the vacuum hose from the top of the machine.

45. Guide the new vacuum hose via the opening to the hose connector located at the i-mop XL handle.

46. Connect the top to the hose connector by twisting it clockwise 1/4 turn until they have lined up.

47. Reinstall the squeegee.

7.4. Cleaning the particle filter

1. Locate the loader assembly top cover (figure 37, part 1) under the solution tank.

2. Remove the valve, (Figure 37, part 3) by turning it counter-clockwise.

3. Remove the particle filter (Figure 37, part 2) and run it under the warm water to clean it out. you may use a soft brush if it is heavily clogged.

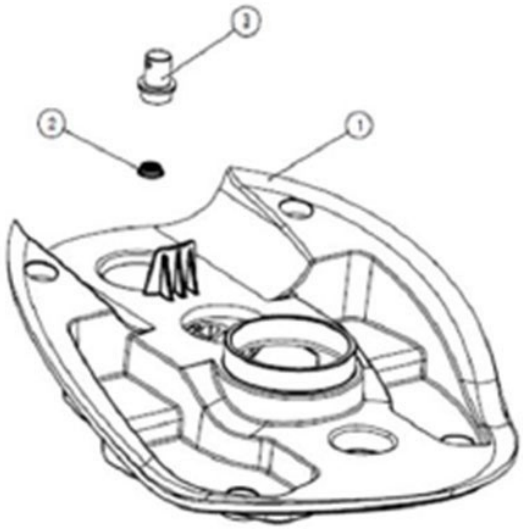

Figure 37.

Clean the filter connector

Use the #2 hex wrench to remove the filter connector. Clean the filter joint with clean water.

Assemble the washed filter joint on the machine and tighten it with the #2 hex wrench.

7.5. Recommended additional cleaning

Clean the exterior of the i-mop® XL weekly with a non-abrasive, non-solvent cleaner or a clean, damp cloth. To clean the scrub deck, remove the brushes.

7.6. Recommended service time

Service must be done by one of our service partners. The first service is recommended after 200 hours. It is recommended to schedule a full service every 500 hours.

7.7. Accessories

The i-mop® XL can be equipped with different brushes and polishing pads. The use of these accessories is only allowed by experienced and trained operators as some polishing pads can be abrasive and can cause damage to the floor surface when applied incorrectly. For more information please contact our sales department, or the partner who provided the i-mop® XL.

8. Troubleshooting

Problem	Cause	Solution
No power	No battery	Insert battery
	Empty battery	Charge battery
	Battery incorrectly placed	Remove and reinstall battery
Insufficient/no water flow	Wrong program	Check the operating mode on the control panel
	Eco mode on	Check the ECO mode light on the control panel
	Empty tank	Fill the tank
	Tank incorrectly placed	The tank valve must be clicked on the nipple to open the seal, replace the tank
	Filter blocked	Ensure the solution tank has no dirt particles and the filter is clean
	Blocked water pipe	Request for service
Poor water recovery	Squeegee opening blocked	Remove the pipe and clean the squeegee opening
	Tears in squeegee blades	Replace squeegee blades
	Filter blocked	Check the yellow filter and clean if necessary
	Vacuum hose blocked	Check and remove blockage
	Vacuum pump not running	Request for service
Leakage	Tanks incorrectly placed	Check and reattach fluid tanks
	Tear in vacuum hose	Replace vacuum hose or request for service
Battery not charging	Battery is at end of life	Replace battery
Charger not charging		Request service
The lights on top of the machine start flashing.	The machine is in parking position longer than 10 minutes	Put the machine back in store position or proceed cleaning
If any problem is caused by electronics and the machine got stuck in functionality there is an reset option.		Make sure that the i-mop is switched off by returning the knob on the control panel to the off position in the middle. Disconnect both battery packs from the machine and hold down the 'water save' button for 30 seconds. Release the button and reinstall both battery packs.

9. Decommissioning and disposal

ATTENTION
It is the responsibility of the i-mop® XL owner to dispose of the product responsibly.

After decommissioning, the i-mop® XL still contains valuable resources and needs to be disposed of according to your local laws and regulations regarding recycling of electrical equipment.

Before disposal please:

1. Flush the machine, see section 6.5.
48. Remove the battery for separate disposal, see section 6.5 (removing battery)
49. Remove all loose components like brushes, tanks and squeegee.
50. Dispose all items according to your local laws and regulations.

10. Parts

P/n	Description
1232627	Front Squeegee Blade, Linatex (standard)
1232629	Rear Squeegee Blade, Linatex (standard)
1265852	Front Squeegee Blade, Urethane (option)
1232635	Rear Squeegee Blade, Urethane (option)
1265851	Squeegee Assembly
1265853	Splash Guard Kit (Left & Right)
1232578	Brush Kit, Blue, Medium, Set of 2 (standard)
1232608	Brush Kit, Lt Blue, Soft, Set of 2 (option)
1232607	Brush Kit, Red, Hard, Set of 2 (option)
1233556	Brush Kit, Blue, Medium, w/ Green Locker, Set of 2 (option)
1233557	Brush Kit, Blue, Medium, w/ Red Locker, Set of 2 (option)
1233559	Brush Kit, Blue, Medium, w/ Yellow Locker, Set of 2 (option)
1232613	Pad Driver Kit, Blue, Set of 2 (option)
1232620	Blue Brush Locker Kit (standard)
1232622	Red Brush Locker Kit (option)
1232624	Yellow Brush Locker Kit (option)
1232626	Green Brush Locker Kit (option)
1234346	Red Pad, Cleaning (box of 10)
1234347	White Pad, Buffing (box of 10)
1234348	Green Pad, Scrubbing (box of 10)
1234350	Blue Pad, Scrubbing (box of 10)
1234344	Black Pad, Light Stripping (box of 10)
1232649	Green Pad, Diamond, Daily Cleaning (Set of 2)
1232645	Yellow Pad, Diamond, Periodic Cleaning (Set of 2)
1232650	White Pad, Diamond, Deep Scrubbing (Set of 2)
1232651	Red Pad, Diamond, Deep Aggressive Scrubbing (Set of 2)
1232647	Orange Pad, Diamond, Ceramic tiles (Set of 2)
1232648	Blue Pad, Diamond, High Traffic Areas (Set of 2)
1265854	Solution Tank Kit, w/ Blue Cap
1232663	Blue Solution Tank Cap Kit (standard)
1232665	Red Solution Tank Cap Kit
1232666	Yellow Solution Tank Cap Kit
1232667	Green Solution Tank Cap Kit
1265855	Recovery Tank Kit
1251765	Recovery Tank Ball Float Assembly
1232100	Battery Kit (Left & Right)
1264543	Battery Charger, 100-240V 2.5A (N. America)
1264257	Battery Charger, 100-240V 9A (N. America - Option)

For North America/International:
Tennant Company
10400 Clean Street, Eden Prairie,
MN 55344-2650
Telephone: (800) 553-8033
Internet: www.tennantco.com

For EMEA region:
Tennant N.V.
Industrielaan 6 5405 AB
P.O. Box 6 5400 AA, Uden -The
Netherlands
Europe@tennantco.com