T12
(Battery)

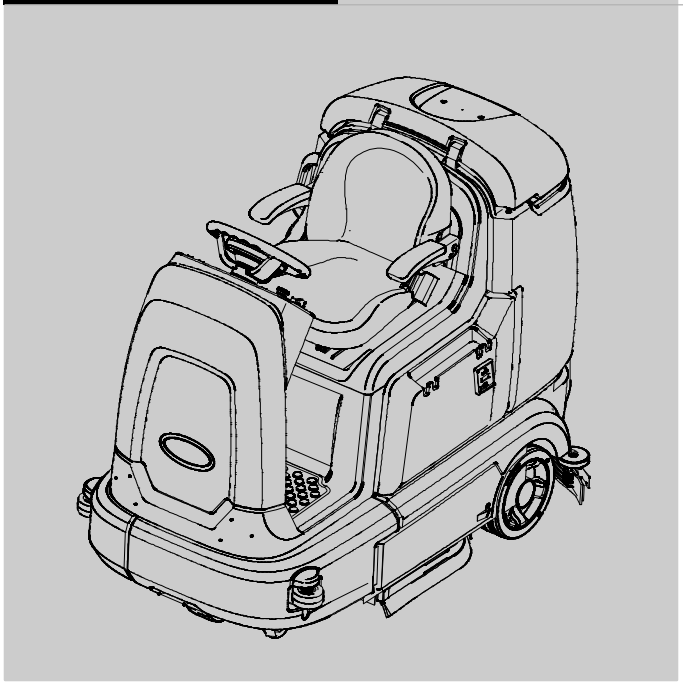

Rider Scrubber Parts Manual

Machine Serial Number Range

(S/N 10000000–19999999)

The Safe Scrubbing Alternative®
Tennant*True*® *Parts*
IRIS® a Tennant Technology
Insta–Fit™ Adapter

Powered by **LITHIUM-ION**

ec H2O®
An ORBIO™ Technology

North America / International

For the latest parts manuals and other language Operator manuals, visit:

www.tennantco.com/manuals

9009916
Rev. 16 (3-2025)

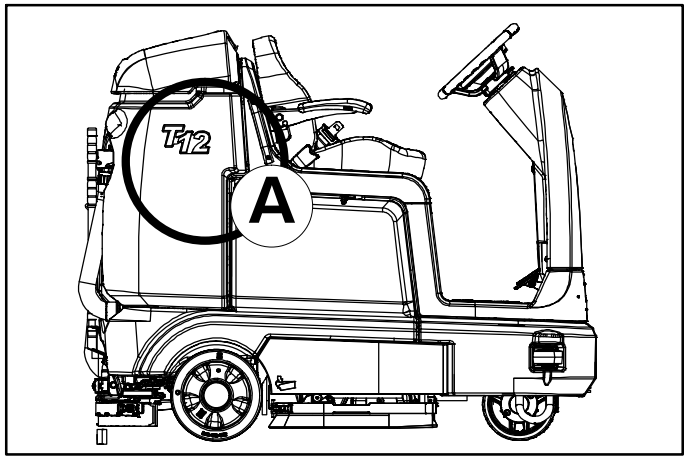

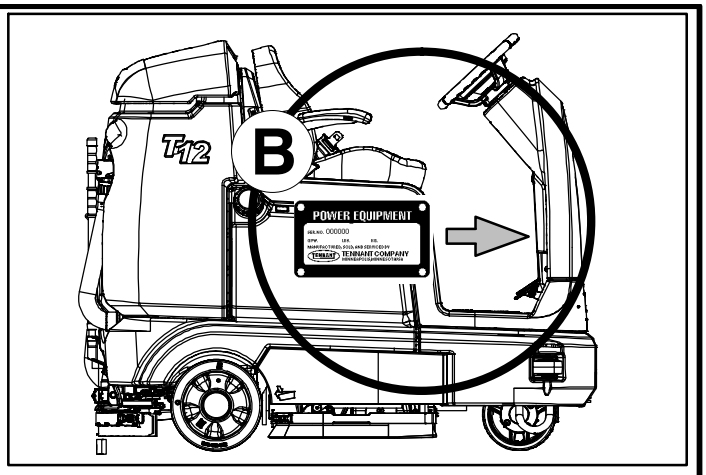

Ref	Part No.	Serial Number	Description	Qty.
1	82681	(100000000–19999999)	Bracket Wldt, Lpg Mount	1
▽ 2	63810	(100000000–19999999)	Latch Assy, Lpg Tank Mtg, W/Nut	4
▲ 3	51839	(100000000–19999999)	Nut Adjustable, Lpg Tank Mtg	2
4	49263	(100000000–19999999)	Tie, Cable	3
5	82556	(100000000–10001564)	Bracket, Vaporizer	1
6	54930	(10000156[illegible]999999)	Vaporizer, LPG	1

D

C

EN

HOW TO ORDER PARTS – See diagram above

Only use TENNANT Company supplied or equivalent parts. Parts and supplies may be ordered online, by phone, by fax or by mail.

Follow the steps below to ensure prompt delivery.

1. **(A)** Identify the machine model.
2. **(B)** Identify the machine serial number from the data plate.
3. **(C)** Ensure the proper serial number is used from the parts list.
4. Identify the part number and quantity. Do not order by page or reference numbers.
5. Provide your name, company name, customer ID number, billing and shipping address, phone number and purchase order number.
6. Provide detail shipping instructions.

(D) ▽ – Identifies an assembly
▲ – Identifies parts included in assembly

Please fill out at time of installation for future reference.

Model No. – _____

Serial No. – _____

Machine Options – _____

Sales Rep. – _____

Sales Rep. phone no. – _____

Customer ID Number – _____

Installation Date – _____

Tennant Company
10400 Clean Street
Eden Prairie, MN 55344–2650
Phone: (800) 553–8033
www.tennantco.com

Touch–N–Go, 1–STEP, Grip–N–Go, Dura–Track, SmartRelease, Duramer, Insta–Fit are trademarks of Tennant Company.

Flow–Rite is a registered trademark of Flow–rite Controls.

Specifications and parts are subject to change without notice.

Copyright © 2013 – 2019, 2022, 2023, 2025 TENNANT Company, Printed in U.S.A.

CN

如何订购部件 – 参见下表

仅使用 TENNANT 公司提供的或同等部件。部件和供应可以在线订购，通过电话、传真或邮件订购。

请遵循下面的步骤确保及时交付。

1. (A) 确定机器型号。
2. (B) 从数据标签确定机器序列号。
3. (C) 确保使用部件列表中的正确序列号。
4. 确定部件号和数量。
   不要按页面或参考编号订购。
5. 提供您的姓名、公司名称、客户 ID 号、付帐和送货地址、电话号码和采购单编号。
6. 提供详细的送货说明。

(D) ▽ – 确定组件
▲ – 确定组件中包含的组件

请在安装时填写供未来参考。

型号 – _____

序列号 – _____

机器选项 – _____

销售代表- _____

销售代表电话号码 – _____

客户 ID 编号 – _____

安装日期 – _____

ES

CÓMO SOLICITAR PIEZAS – Consulte el diagrama anterior.

Utilice sólo las piezas suministradas por TENNANT Company o piezas equivalentes. Puede solicitar las piezas a través de internet, por teléfono, por fax o por correo.

Siga los siguientes pasos para que la entrega sea rápida.

1. **(A)** Indique el modelo de máquina.
2. **(B)** Indique el número de serie de la etiqueta de datos.
3. **(C)** Asegúrese de que indica el número de serie correcto de la lista de piezas.
4. Indique la cantidad y el número de la pieza.
   No realice el pedidoindicando el número de página o el de referencia.
5. Incluya su nombre, el nombre de la empresa, el ID de cliente, las direcciones de envío y facturación, el número de teléfono y el número del pedido de compra.
6. Facilite instrucciones de envío.

(D) ▽ – identifica un conjunto
▲ – identifica piezas de un conjunto

Rellene estos datos cuando realice la instalación para utilizarlos como referencia en el futuro.

Nº modelo – _____

Nº serie – _____

Opciones de la máquina – _____

Vendedor – _____

Nº teléfono vendedor – _____

Nº cliente – _____

Fecha de instalación – _____

FR

COMMENT COMMANDER DES PIÈCES DÉTACHÉES – Voir le schéma ci-dessus.

Utilisez uniquement des pièces fournies par la société TENNANT ou équivalentes. Les pièces et fournitures peuvent être commandées en ligne, par téléphone, fax, ou par courrier.

Suivez les étapes ci-dessous pour assurer une livraison rapide.

1. **(A)** Identifiez le modèle de la machine.
2. **(B)** Identifiez le numéro de série de la machine, à partir de l'étiquette signalétique.
3. **(C)** Assurez-vous que le numéro de série correct est utilisé à partir de la liste de pièces détachées.
4. Identifiez le numéro de pièce et la quantité. Ne commandez pas par page ou numéros de référence.
5. Fournissez votre nom, le nom de votre société, votre numéro d'identification de client, l'adresse de facturation et d'expédition, le numéro de téléphone et le numéro du bon de commande.
6. Fournissez des instructions d'expédition détaillées.

(D) ▽ – identifie un assemblage
▲ – identifie les pièces composant l'assemblage

A remplir au moment de l'installation à titre de référence.

Nº du modèle – _____

Nº de série – _____

Options de la machine – _____

Agent commercial – _____

Nº tél. de l'agent commercial – _____

Numéro d'identification client – _____

Date d'installation – _____

JP

パーツの発注方法 ?上記の図を参照してください

TENNANT社製のパーツまたは同等品のみをお使いください。
パーツやサプライ品のご注文は、オンライン、電話、FAX、または手紙でお願いいたします。
確実にお届けできるように、以下の情報お知らせください。

1. (A) 製品のモデル名をお知らせください。
2. (B) 製品のデータラベルに印刷されているシリアル番号をお知らせください。
3. (C) パーツリストを参照して、シリアル番号が正しいかご確認ください。
4. パーツ番号と数量をお知らせください。マニュアル/カタログのページ番号や参照番号でのご注文はご遠慮ください。
5. お客様のお名前、会社名、顧客ID番号、請求/発送先住所、電話番号、注文書番号をお知らせください。
6. 発送に関するご希望があれば、明記してください。

(D) ▽ – アセンブリを示します
▲ – アセンブリに含まれるパーツを示します

後日確認できるように、設置時に記入してください。

モデルNo. – _____

シリアルNo. – _____

製品のオプション– _____

販売代理店 – _____

販売代理店の電話番号 – _____

顧客ID番号 – _____

設置日 – _____

General Recommended Maintenance Items

Ref.	Part No.	Serial Number	Description	Qty.
	1200430	(10000000–19999999)	Blade, Sqge, Side, 22.50l, Linatex	2
	1202159	(10000000–19999999)	Blade, Sqge, Side, 22.50l, Ure	2
	1202160	(10000000–19999999)	Blade, Sqge, Side, 22.50l, Gum	2
	1200383	(10000000–19999999)	Blade, Sqge, Front, 42.59l [Linard]	1
	1200384	(10000000–19999999)	Blade, Sqge, Rear, 44.96l Linatex	1
	1201825	(10000000–19999999)	Blade, Sqge, Front, 42.59l [Gum]	1
	1201823	(10000000–19999999)	Blade, Sqge, Front, 42.59l [Urethane]	1
	1201826	(10000000–19999999)	Blade, Sqge, Rear, 44.96l Gum	1
	1201824	(10000000–19999999)	Blade, Sqge, Rear, 44.96l Urethane	1
	1054100	(10000000–19999999)	Wheel, 04.0d 2.56w 0.41b	2
	363162	(10000000–19999999)	Wheel, 04.0d 0.89w 0.64b	2
	1205850	(10000000–19999999)	Caster Assy, Swivel	2
	222280	(10000000–19999999)	Battery, Wet, 06vdc 0240ah	6
	1070587	(10000000–19999999)	Battery, Wet, 06vdc 0360ah	6
▽	9010935	(10000000–19999999)	Tool, Belt, Cyl Head, Afmkt [T12] (Cylindrical Scrub Head)	1
▲	1200334	(10000000–19999999)	Belt, Drive, 7 Grv	2
▲	1203758	(10000000–19999999)	Tool, Installation, Belt	1
	1201053	(10000000–19999999)	Skirt, Rbr, Front, Disc (Disc Scrub Head)	1
	1201185	(10000000–19999999)	Strip, Skirt, Rear, Disc (Disc Scrub Head)	1
	361144	(10000000–19999999)	Key, Ignition, Sgl	1
	16411	(10000000–19999999)	Off Whites/G Acrylic12.8oz[Acm101–00171]	1
	16412	(10000000–19999999)	Teal Blue S/G Enamel12.8oz[Icm101–70266]	1
	377540	(10000000–19999999)	Paint, Airdry, Blk, 12oz	1
	377538	(10000000–19999999)	Paint, Airdry, Gray, 12oz [Enamel]	1
	377537	(10000000–19999999)	Iron Gray S/G Enamel12.8oz[Icm101–00517]	1

SECTION 2

Contents **Page**

Fig. 1 – Replacement Brushes, Scrub Head 2-2
Fig. 2 – Replacement Brushes, Side Brush 2-4
Fig. 3 – Main Frame and Wheels Group 2-6
Fig. 4 – Front Bumper and Side Door Group 2-8
Fig. 5 – Seat Support Group 2-10
Fig. 6 – Seat Group, Standard 2-12
Fig. 7 – Seat Kit, Deluxe 2-14
Fig. 8 – Steering and Instrument Panel Group, T12 2-16
Fig. 9 – Steering and Instrument Panel Group, T12XP 2-18
Fig. 10 – Front Cover and Directional Pedal Group 2-20
Fig. 11 – Scrub Head Lift Group 2-22
Fig. 12 – Scrub Head and Drive Motor Group, Disk . 2-24
Fig. 13 – Scrub Head Frame Group, Cylindrical . 2-26
Fig. 14 – Scrub Head Drive Motor Group, Cylindrical 2-28
Fig. 15 – Scrub Head Side Squeegee Group, Right Hand 2-30
Fig. 16 – Scrub Head Side Squeegee Group, Left Hand 2-32
Fig. 17 – Recovery Tank Group 2-34
Fig. 18 – Vacuum Fan Group 2-36
Fig. 19 – Solution Tank Group 2-38
Fig. 20 – Rear Squeegee Lift Group 2-40
Fig. 21 – Rear Squeegee Kit 2-42
Fig. 22 – Electrical Circuit Board Group 2-44
Fig. 23 – Electrical Contactor and Wires Group . 2-46
Fig. 24 – Battery Group, 240Ah 2-48
Fig. 25 – Wire Harnesses Group 2-50
Fig. 26 – Labels Group 2-51

Fig. 1 – Replacement Brushes, Scrub Head

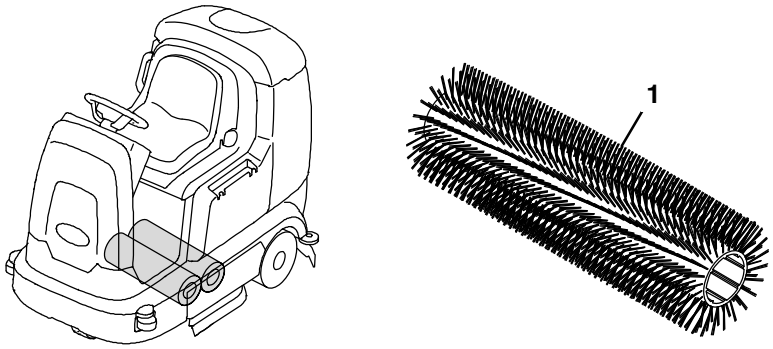

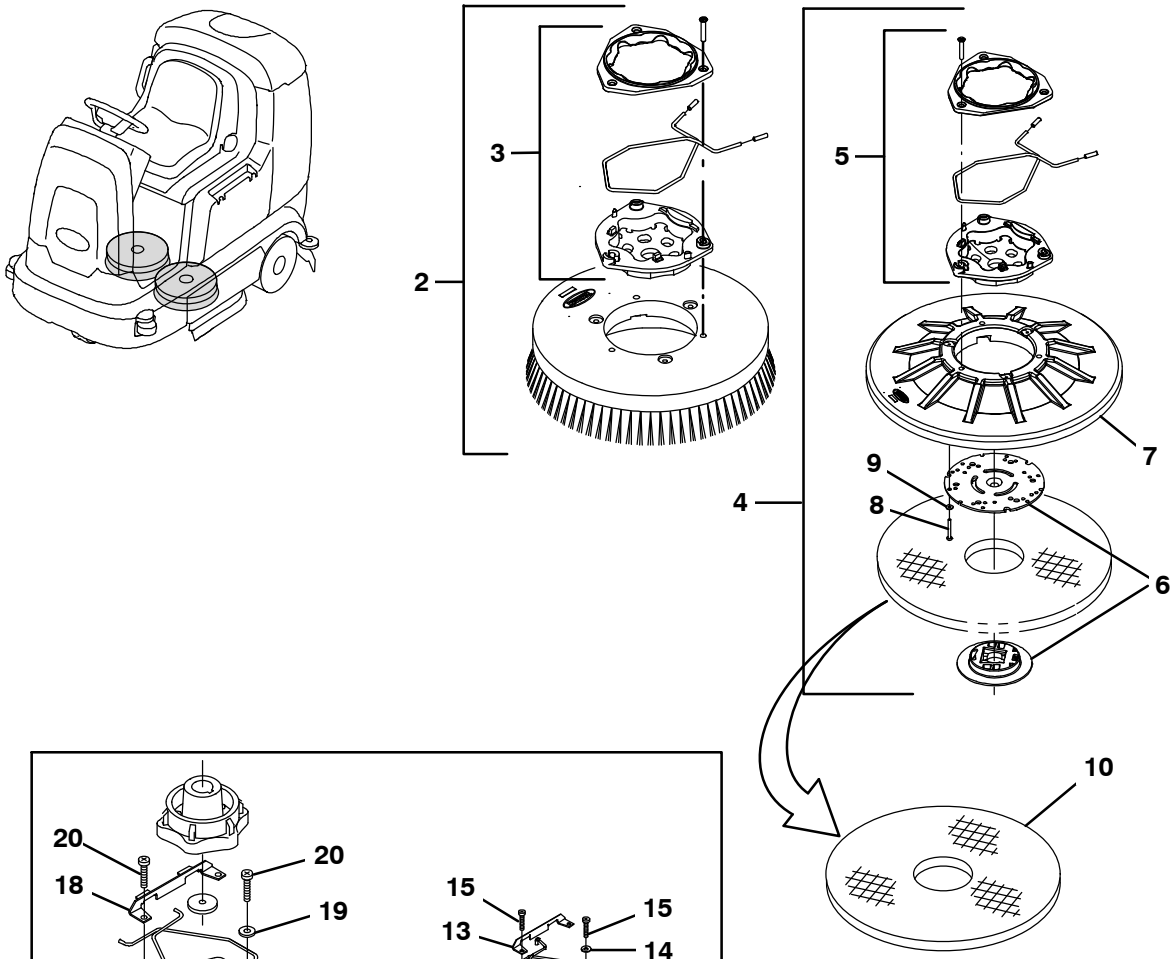

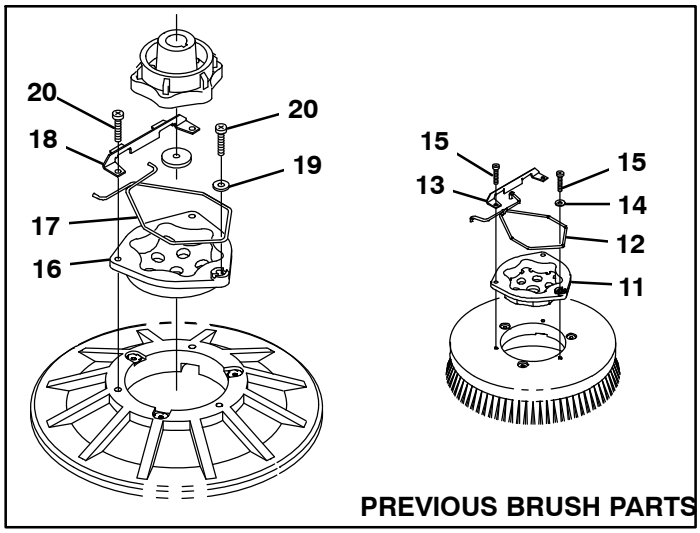

356346

Fig. 1 – Replacement Brushes, Scrub Head

	Ref.	Part No.	Serial Number	Description	Qty.
	1	1201572	(10000000–19999999)	Brush, Scb, 31l, 18sr, Polypropylene, Spiral	2
	1	1201926	(10000000–19999999)	Brush, Scb, 31l, 18sr, Heavy Duty Polypropylene, Spiral	2
	1	1201927	(10000000–19999999)	Brush, Scb, 31l, 18sr, Polyester, Spiral	2
	1	1201928	(10000000–19999999)	Brush, Scb, 31l, 18sr, Super Abrasive, Spiral	2
▽	2	1220235	(10000000–19999999)	Brush Assy, Disk, Scrub, 16.0D, Nylon	2
▲	3	9014662	(10000000–19999999)	Brush Kit, Hub Assy, Drive, Ci [Hdpe In]	1
▽	2	1220241	(10000000–19999999)	Brush Assy, Disk, Scrub, 16.0D, Polypropylene	2
▲	3	9014662	(10000000–19999999)	Brush Kit, Hub Assy, Drive, Ci [Hdpe In]	1
▽	2	1221543	(10000000–19999999)	Brush Assy, Disk, Scrub, 16.0D, Super Abrasive	2
▲	3	9014662	(10000000–19999999)	Brush Kit, Hub Assy, Drive, Ci [Hdpe In]	1
▽	2	1220236	(10000000–19999999)	Brush Assy, Disk, Scrub, 16.0D, Heavy Duty Polypropylene	2
▲	3	9014662	(10000000–19999999)	Brush Kit, Hub Assy, Drive, Ci [Hdpe In]	1
▽	4	1220244	(10000000–19999999)	Driver Assy, Pad, 16.0D	2
▲	5	9014666	(10000000–19999999)	Brush Kit, Hub Assy, Drive, Ci [Uhmw]	1
▲	6	370095	(10000000–19999999)	Device, Centering, Clip On, Ti [Gf Pp]	1
▲	7	397976	(10000000–19999999)	Disk, Driver, Pad, W/Face, 16.0D	1
▲	8	09198	(10000000–19999999)	Screw, Pan, Phl, M4 X 0.70 X 35, Ss	3
▲	9	41579	(10000000–19999999)	Washer, Flat, 08, Ss	3
	10	63248–1	(10000000–19999999)	Pad, Stripping, 16.0d, Brown[1pick=1pad]	2
	10	63248–2	(10000000–19999999)	Pad, Scrubbing, 16.0d, Blu [1pick=1pad]	2
	10	63248–3	(10000000–19999999)	Pad, Buff, 16.0d, Red [1pick=1pad]	2
	10	63248–4	(10000000–19999999)	Pad, Polish, 16.0d, White [1pick=1pad]	2
	10	370092	(10000000–19999999)	Pad, Stripping, 16.0d[Hi Prod, Black, 1pick=1pad	2
	10	1051027	(10000000–19999999)	Pad, Surf Prep, 16.0d [Maroon, 1pick=1pad]	2

Previous Brush Parts

Ref.	Part No.	Serial Number	Description	Qty.
11	1017368	(10000000–19999999)	Hub, Drive, Brush, Disk, 3hole 5.8bc	1
12	14838	(10000000–19999999)	Spring, Wir, 0.16d, Brush Retaining	1
13	24299	(10000000–19999999)	Bracket, Retainer, Spring	1
14	01684	(10000000–19999999)	Washer, Flat, 0.27b 0.69d .05, Ss	1
15	32746	(10000000–19999999)	Screw, Pan, Phl, M6 X 1.00 X 35, Ss	2
16	15539	(10000000–19999999)	Hub, Drive, Brush, Disk, 3hole 5.8bc[6t]	1
17	14838	(10000000–19999999)	Spring, Wir, 0.16d, Brush Retaining	1
18	24299	(10000000–19999999)	Bracket, Retainer, Spring	1
19	01684	(10000000–19999999)	Washer, Flat, 0.27b 0.69d .05, Ss	1
20	32746	(10000000–19999999)	Screw, Pan, Phl, M6 X 1.00 X 35, Ss	1
	30241	(10000000–19999999)	Brush Assy, Disk, Scb, 16.0d, Polypropylene (Replaced by 1220241)	2
	1042500	(10000000–19999999)	Brush Assy, Disk, Scb, 16.0d, Polypropylene Stiff (Replaced by 1220236)	2
	1042499	(10000000–19999999)	Brush Assy, Disk, Scb, 16.0d, Nylon (Replaced by 1220235)	2
	1042504	(10000000–19999999)	Brush Assy, Disk, Scb, 16.0d, Super Abrasive (Replaced by 1221543)	2
	397916	(10000000–19999999)	Driver Assy, Pad, 16. (Replaced by 1220244)	2

Fig. 2 – Replacement Brushes, Side Brush

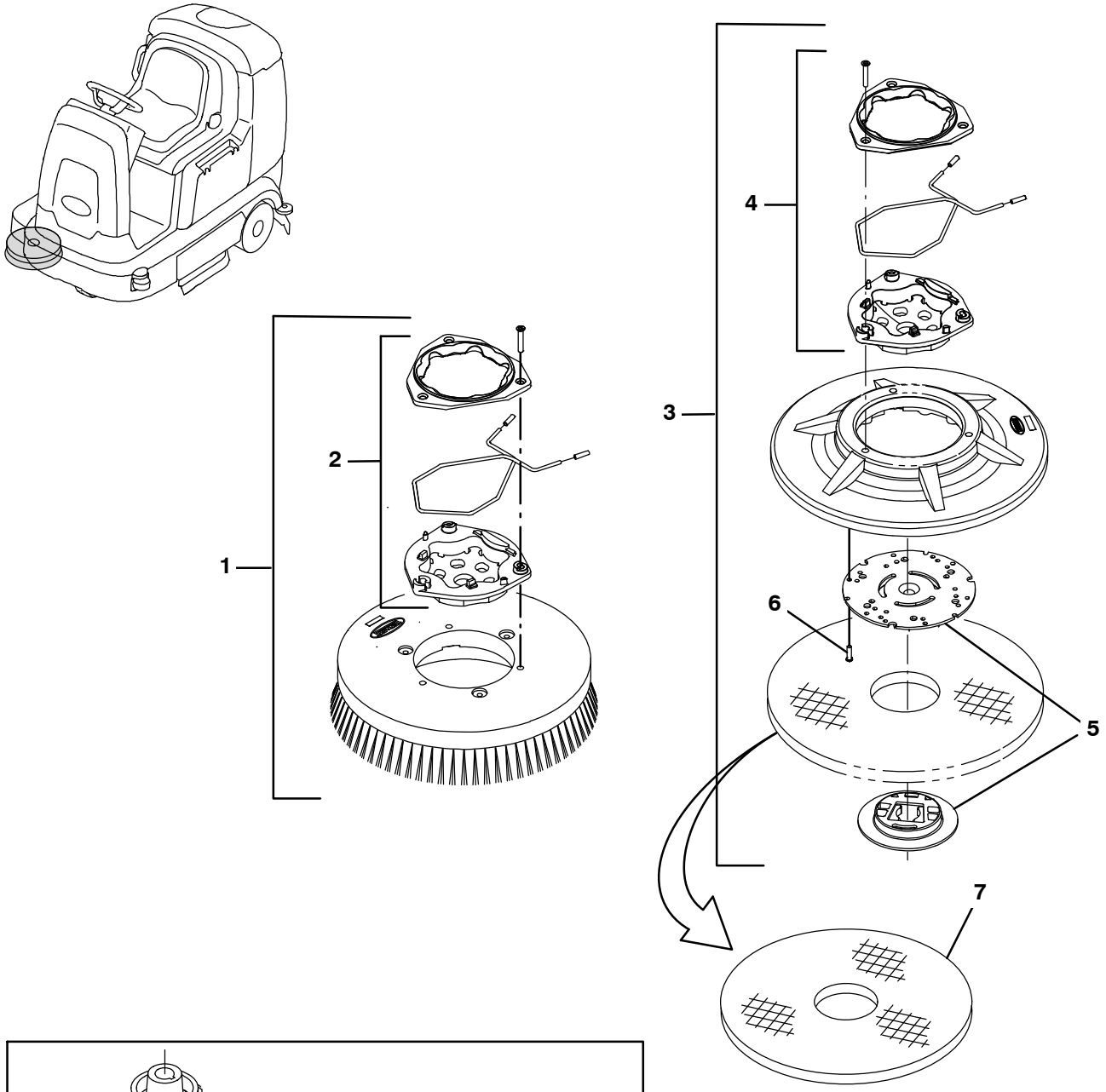

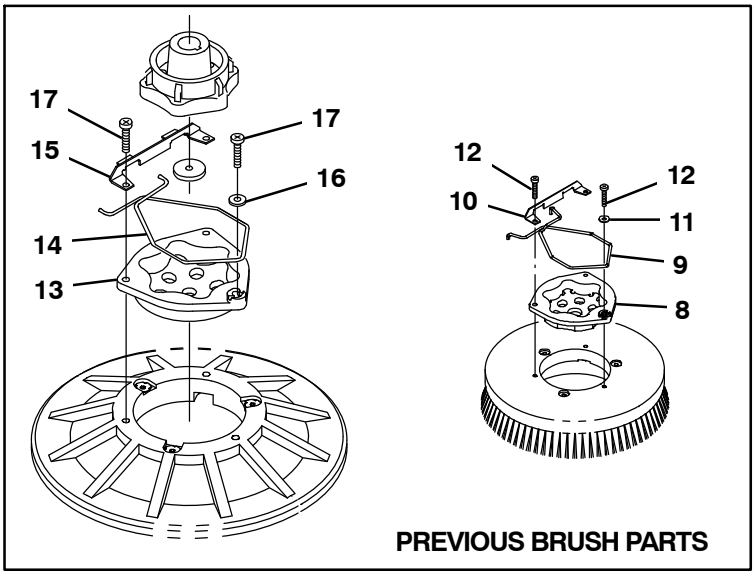

356347

Fig. 2 – Replacement Brushes, Side Brush

	Ref.	Part No.	Serial Number	Description	Qty.
▽	1	1220230	(10000000–19999999)	Brush Assy, disk, Scb, 13.0D, Nylon	2
▲	2	9014662	(10000000–19999999)	Brush Kit, Hub Assy, Drive, Cl	1
▽	1	1220231	(10000000–19999999)	Brush Assy, disk, Scb, 13.0D, Polypropylene Stiff	2
▲	2	9014662	(10000000–19999999)	Brush Kit, Hub Assy, Drive, Cl	1
▽	1	1220232	(10000000–19999999)	Brush Assy, disk, Scb, 13.0d, Super Abrasive	2
▲	2	9014662	(10000000–19999999)	Brush Kit, Hub Assy, Drive, Cl	1
▽	3	1220243	(10000000–19999999)	Driver Assy, Pad, 13.0D	1
▲	4	9014664	(10000000–19999999)	Brush Kit, Hub Assy, Drive, Cl	1
▲	5	370095	(10000000–19999999)	Device, Centering, Clip On, Tl [Gf Pp]	1
▲	6	360943	(10000000–19999999)	Screw, Pan, Phl, 10–14 X 0.75, F/Plstc	3
	7	89046	(10000000–19999999)	Pad, Stripping, 13.0d, Brown[1pick=1pad]	2
	7	89047	(10000000–19999999)	Pad, Scrubbing, 13.0d, Blue	2
	7	89048	(10000000–19999999)	Pad, Buff, 13.0d, Red [1pick=1pad]	2
	7	89049	(10000000–19999999)	Pad, Polish, 13.0d, White [1pick=1pad]	2
	7	1051024	(10000000–19999999)	Pad, Surf Prep, 13.0d [Mar, 1pick=1pad]	2

Ref.	Part No.	Serial Number	Description	Qty.
8	1017368	(10000000–19999999)	Hub, Drive, Brush, Disk, 3hole 5.8bc	1
9	14838	(10000000–19999999)	Spring, Wir, 0.16d, Brush Retaining	1
10	24299	(10000000–19999999)	Bracket, Retainer, Spring	1
11	01684	(10000000–19999999)	Washer, Flat, 0.27b 0.69d .05, Ss	1
12	32746	(10000000–19999999)	Screw, Pan, Phl, M6 X 1.00 X 35, Ss	3
13	1017368	(10000000–19999999)	Hub, Drive, Brush, Disk, 3hole 5.8bc	1
14	1017957	(10000000–19999999)	Spring, Retaining, Brush	1
15	24299	(10000000–19999999)	Bracket, Retainer, Spring	1
16	01684	(10000000–19999999)	Washer, Flat, 0.27b 0.69d .05, Ss	1
17	32746	(10000000–19999999)	Screw, Pan, Phl, M6 X 1.00 X 35, Ss	3
	1042492	(10000000–19999999)	Brush Assy, Disk, Scb, 13.0d, Nylon (Scrubbing) (Replaced by 1220230)	1
	1042494	(10000000–19999999)	Brush Assy, Disk, Scb, 13.0d, Polypropylene Stiff (Scrubbing) (Replaced by 1220231)	1
	1042496	(10000000–19999999)	Brush Assy, Disk, Scb, 13.0d, Super Abrasive (Scrubbing) (Replaced by 1220232)	1
	379013	(10000000–19999999)	Driver Assy, Pad, 13.0d (Replaced by 1220243)	2

Fig. 3 – Main Frame and Wheels Group

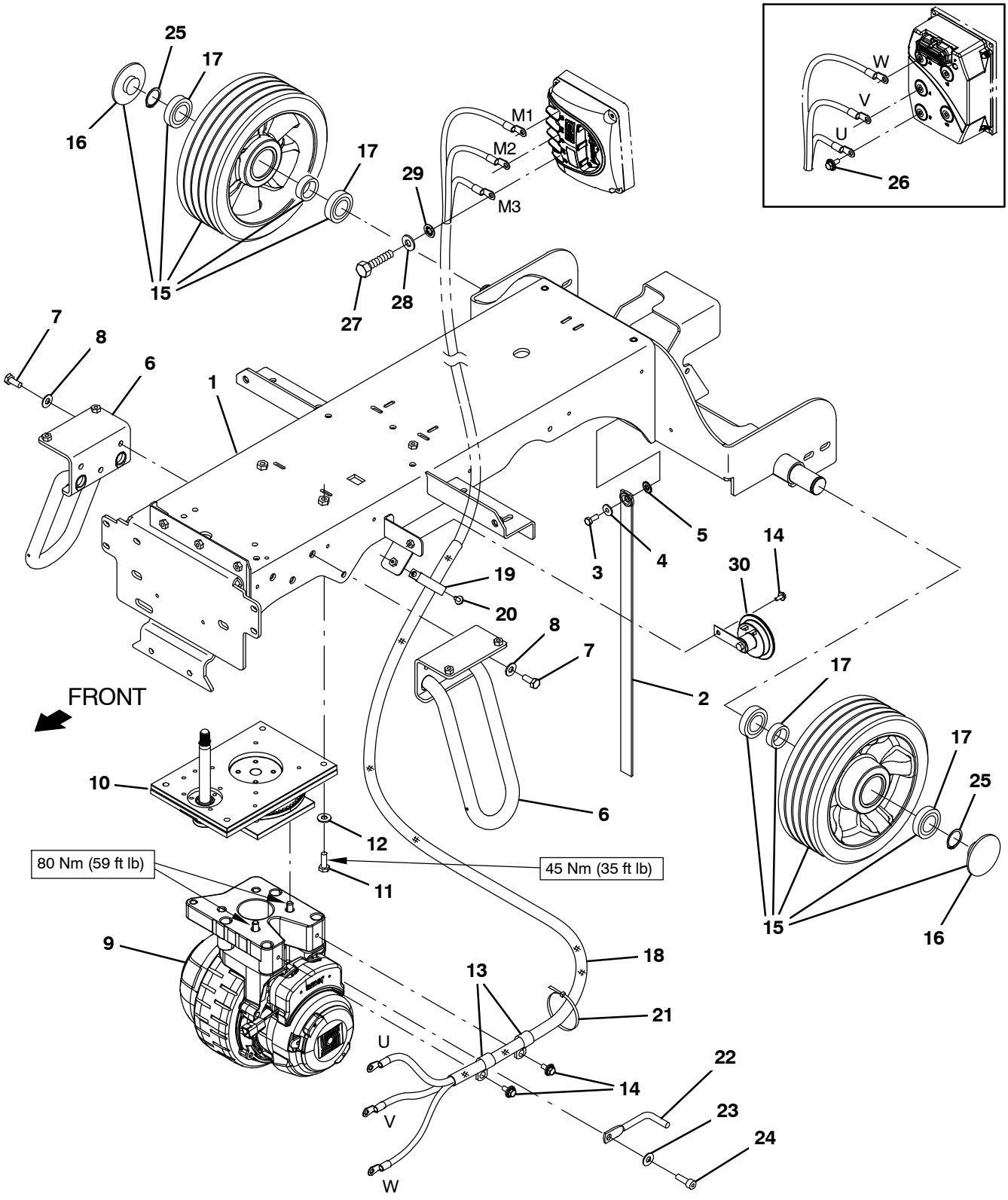

356308

Fig. 3 – Main Frame and Wheels Group

	Ref.	Part No.	Serial Number	Description	Qty.
	1	1200025	(10000000–19999999)	Frame Wldt [T12]	1
	2	71579	(10000000–19999999)	Strap, Static, W/Grommet, .19 1.1w 25.0l	1
	3	09011	(10000000–19999999)	Screw, Hex, M8 X 1.25 X 30, Ss	1
	4	41141	(10000000–19999999)	Washer, Lock, Int–Ext, 0.31	1
	5	01685	(10000000–19999999)	Washer, Flat, 0.38b 0.88d .08, Ss	1
	6	1200298	(10000000–19999999)	Stabilizer Wldt [Cassoday]	2
	7	12317	(10000000–19999999)	Screw, Hex, M10 X 1.50 X 30, Ss	6
	8	01686	(10000000–19999999)	Washer, Flat, 0.44b 1.00d .08, Ss	6
	9	1200150	(10000000–10956761)	Wheel, Drive, Ac (Replaced by 1255933)	1
	9	1246662	(10956762–11025471)	Wheel, Drive, Ac (See Breakdown) (Replaced by 1255933)	1
	9	1255933	(11025472–19999999)	Wheel, Drive, Ac (See Breakdown)	1
	10	1200203	(10000000–11017501)	Steer–Control Assy, Wheel Drive (See Breakdown) (Replaced by 1256309)	1
	10	1256309	(11017502–19999999)	Steer–Control Assy, Wheel Drive (See Breakdown)	1
	11	09028	(10000000–19999999)	Screw, Hex, M10 X 1.50 X 25, Ss	4
	12	01686	(10000000–19999999)	Washer, Flat, 0.44b 1.00d .08, Ss	4
	13	69234	(10000000–10863997)	Clamp, Cable, Stl, 1.00d X 0.75w, 1hole	2
	13	58366	(10863998–19999999)	Clamp, Cable, Stl, 1.25d X 1.00w, 1hole	2
	14	1020341	(10000000–19999999)	Screw, Hex, M8 X 1.25 X 20, Ss, Sems	3
▽	15	1060626	(10000000–19999999)	Tire Assy, Solid, 300mm X 100mm, Ure	2
▲	16	9011872	(10000000–19999999)	Cap, Hub, Wheel [For 1060626]	1
▲	17	24899	(10000000–19999999)	Bearing, Ball 1.48B 2.38B 0.67W	2
	18	31646	(10000000–19999999)	Sleeve, Nyl, 1.63ID 25.0l	1
	19	09570	(10000000–19999999)	Clamp, Cable, Stl, 0.9x1.8x0.62w, 1hole	1
	20	1034731	(10000000–19999999)	Screw, Hex, M6 X 1.00 X 16, Ss, Sems	1
	21	130773	(10000000–19999999)	Tie, Cable, Nyl, 11.0l, .14w, 3.0 Max. D	3
	22	1207171	(10000000–19999999)	Rod, Sppt	1
	23	33924	(10000000–19999999)	Washer, Flat, M10, Ss	1
	24	41358	(10000000–19999999)	Screw, Soc, M10X1.50X35, 12.9	1
	25	1059019	(10000000–19999999)	Ring, Retaining, Ext, 1.375od	2
	26	1034731	(10000000–10863997)	Screw, Hex, M6 X 1.00 X 16, Ss, Sems	3
	27	87308	(10863998–19999999)	Screw, Hex, M6 X 1.00 x 12, 8.8	3
	28	32483	(10863998–19999999)	Washer, Flat, 0.25, Sae	3
	29	32982	(10863998–19999999)	Washer, Lock, Int, 0.25	3
	30	1057780	(10000000–19999999)	Horn, 36vdc, 110dba	1

Fig. 4 – Front Bumper and Side Door Group

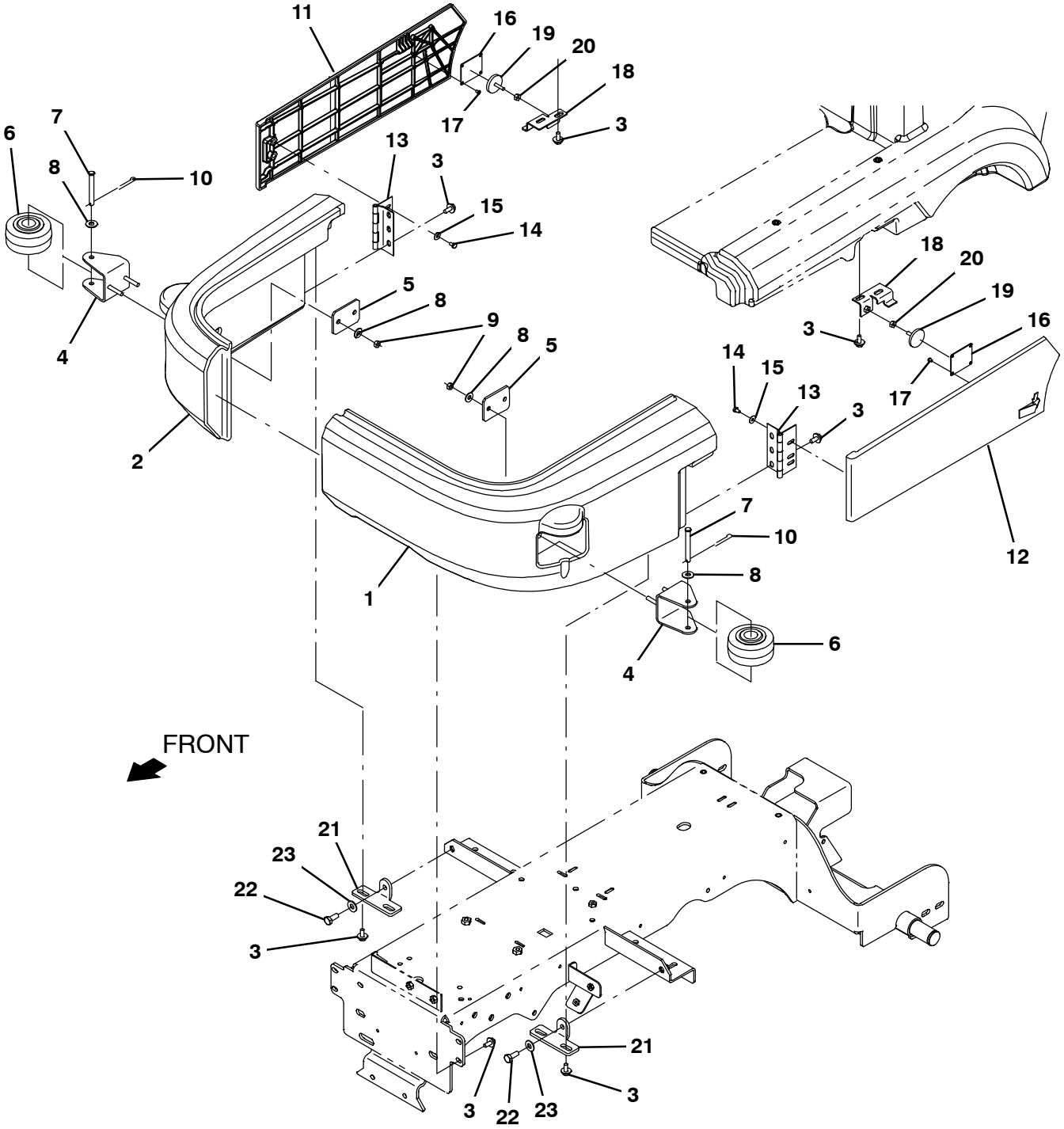

356309

Fig. 4 – Front Bumper and Side Door Group

Ref.	Part No.	Serial Number	Description	Qty.
1	9010924	(10000000–19999999)	Bumper, Lh, Afmkt [T12]	1
2	9010925	(10000000–19999999)	Bumper, Rh, Afmkt [T12]	1
3	1020341	(10000000–19999999)	Screw, Hex, M8 X 1.25 X 20, Ss, Sems	15
4	1200869	(10000000–19999999)	Channel Wldt, Rlr	2
5	1200870	(10000000–19999999)	Plate, Backing, Roller	2
6	1054100	(10000000–19999999)	Wheel, 04.0d 2.56w 0.41b	2
7	57598	(10000000–19999999)	Pin, Clevis, 0.37d X 3.25l	2
8	01685	(10000000–19999999)	Washer, Flat, 0.38b 0.88d .08, Ss	6
9	08713	(10000000–19999999)	Nut, Hex, Lock, M8 X 1.25, Nl, Ss	4
10	44906	(10000000–19999999)	Pin, Cotter, Hair, 0.38d .093 Wir	2
11	1202289	(10000000–19999999)	Panel, Door, Rh	1
12	1202392	(10000000–19999999)	Panel, Door, Lh	1
13	1202349	(10000000–19999999)	Hinge, Brush Door, Bent	2
14	06941	(10000000–19999999)	Screw, Hex, M6 X 1.00 X 10, 8.8	4
15	01684	(10000000–19999999)	Washer, Flat, 0.27b 0.69d .05, Ss	4
16	1202941	(10000000–19999999)	Plate, Latch	2
17	1203025	(10000000–19999999)	Screw, Pan, Phl, 08–16 X 0.25, F/Plstc	8
18	1200984	(10000000–19999999)	Bracket Wldt, Latch, Lh	2
19	1202779	(10000000–19999999)	Magnet, Latch, Brush Door	2
20	32520	(10000000–19999999)	Nut, Hex, Jam, .25–20	2
21	1200460	(10000000–19999999)	Bracket, Bumper, Right	2
22	09028	(10000000–19999999)	Screw, Hex, M10 X 1.50 X 25, Ss	2
23	01686	(10000000–19999999)	Washer, Flat, 0.44b 1.00d .08, Ss	2

Fig. 5 – Seat Support Group

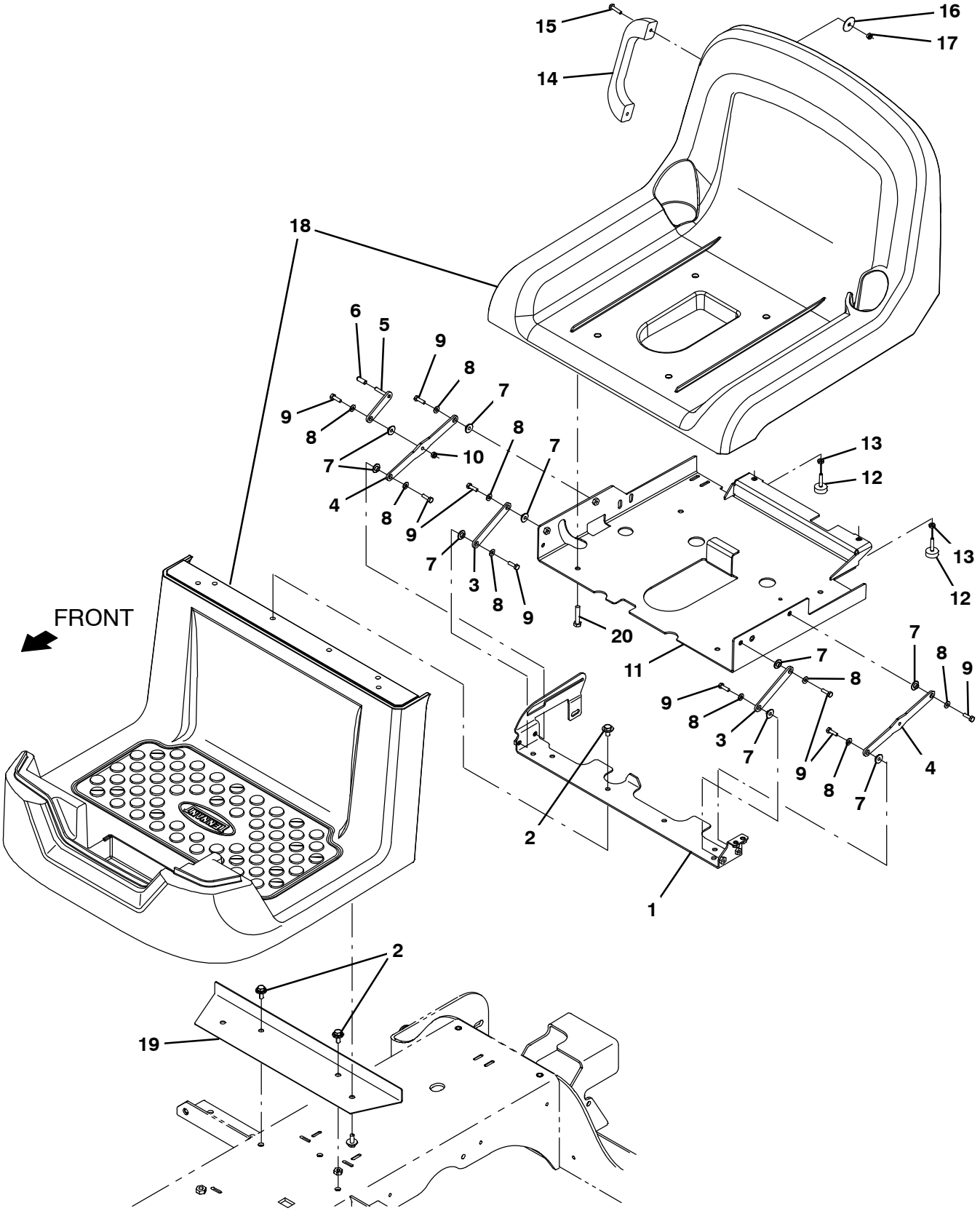

356310

Fig. 5 – Seat Support Group

Ref.	Part No.	Serial Number	Description	Qty.
1	9011057	(10000000–19999999)	Plate Wldt, Mtg, W/Label, Aftmkt, Na	1
1	9011058	(10000000–19999999)	Plate Wldt, Mtg, W/Label, Aftmkt, JP	1
2	1020341	(10000000–19999999)	Screw, Hex, M8 X 1.25 X 20, Ss, Sems	10
3	1200827	(10000000–19999999)	Link, Oprtr Station	2
4	1200828	(10000000–19999999)	Link, Oprtr Station	2
5	1201103	(10000000–19999999)	Link Wldt, Oprtr Station	1
6	1202957	(10000000–19999999)	Grip, Handle, .25d .90l Yel	1
7	1202156	(10000000–19999999)	Sleeve, Flange	9
8	19066	(10000000–19999999)	Washer, Flat, 0.25b 0.56d .05, Pl, 10	10
9	08716	(10000000–19999999)	Screw, Hex, M6 X 1.00 X 20, Ss	9
10	08708	(10000000–19999999)	Nut, Hex, Lock, M6 X 1.00, Nl	1
11	1200210	(10000000–19999999)	Channel Wldt, Seat	1
12	20802	(10000000–19999999)	Bumper, Rbr, 1.0d 0.38th .25–20	2
13	32520	(10000000–19999999)	Nut, Hex, Jam, .25–20	2
14	381962	(10000000–19999999)	Handle, Container	1
15	382726	(10000000–19999999)	Screw, Pan, Phl, M6 X 1.00 X 25, 4.8	2
16	41178	(10000000–19999999)	Washer, Flat, 0.25, Fendr	2
17	08712	(10000000–19999999)	Nut, Hex, Lock, M6 X 1.00, Nl, Ss	2
18	9009632	(10000000–19999999)	Part Kit, Station, Oprtn, Plstc [2Pc=1Kit]	1
19	1200612	(10000000–19999999)	Angle, Support	1
20	09026	(10000000–19999999)	Screw, Hex, M8 X 1.25 X 40, Ss	4

Fig. 6 – Seat Group, Standard

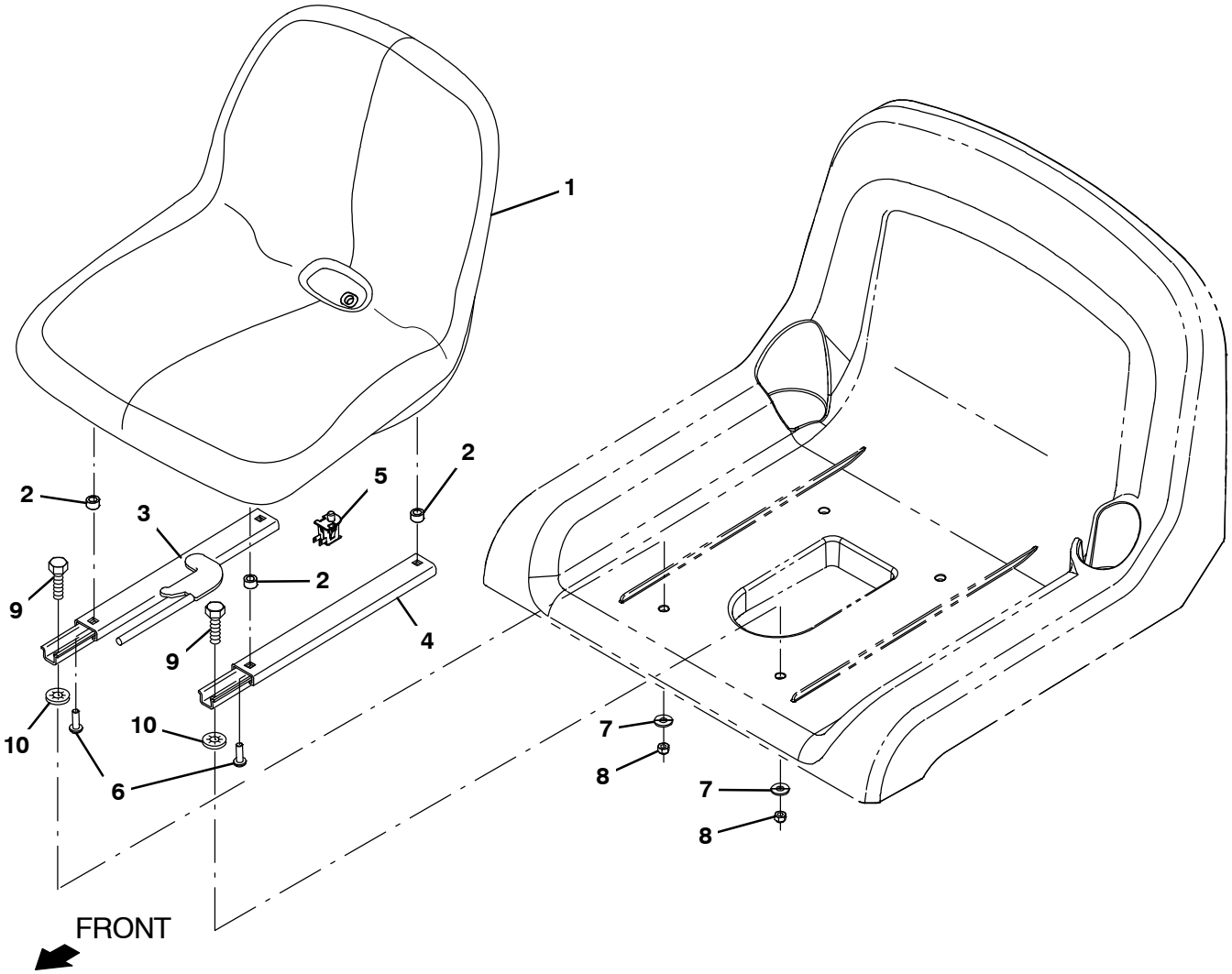

356311

Fig. 6 – Seat Group, Standard

Ref.	Part No.	Serial Number	Description	Qty.
1	1201894	(10000000–19999999)	Seat, Std [Milsco]	1
2	1051052	(10000000–19999999)	Spacer, Rnd, .38b .88d .38l	4
3	1077071	(10000000–19999999)	Track, Locking, 12.5L, No Stud W/Handle	1
4	1077067	(10000000–19999999)	Track, N–Lkg, Seat, 12.5L, No Stud	1
5	1048955	(10000000–19999999)	Switch, Seat, No [Delta 6440–04]	1
6	1035038	(10000000–19999999)	Screw, Hex, .31–18 X 1.38, Ss, Nl	4
7	01685	(10000000–19999999)	Washer, Flat, 0.38b 0.88d .08, Ss	4
8	41437	(10000000–19999999)	Nut, Hex, Lock, .31–18, Nl, Ss	4
9	76955	(10000000–19999999)	Track, N–Lkg, Seat, 12.5L, No Stud	4
10	1077073	(10000000–19999999)	Nut, Push, Bolt Retension, Stl, 5/16 Thrd	4

Fig. 7 – Seat Kit, Deluxe

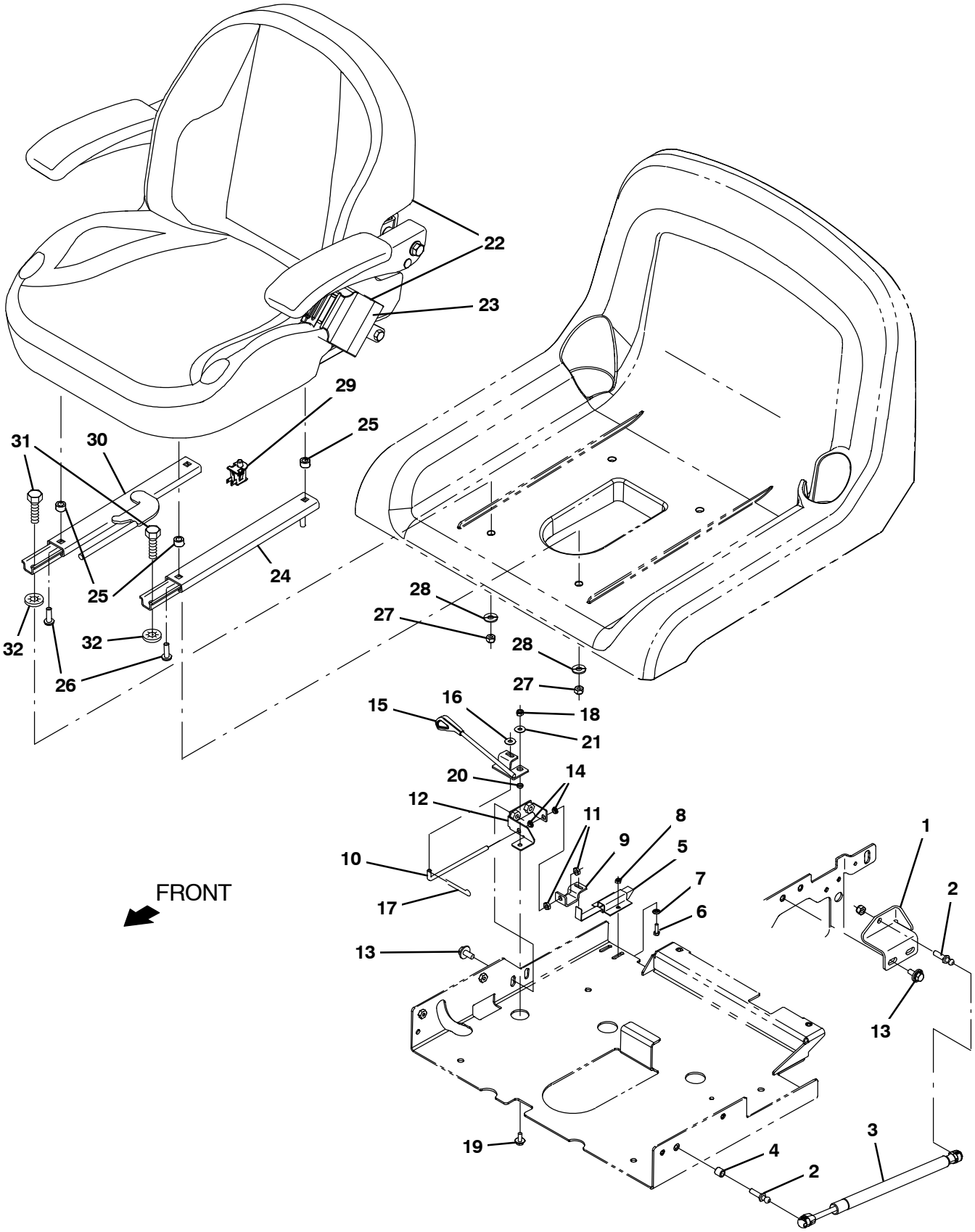

356312

Fig. 7 – Seat Kit, Deluxe

	Ref.	Part No.	Serial Number	Description	Qty.
▽		9009836	(10000000–19999999)	Seat Kit, Deluxe, Ci [T12]	1
▲	1	1202800	(10000000–19999999)	Bracket, Mtg, Ball Stud	1
▲	2	1012878	(10000000–19999999)	Stud, Ball, .39d .31–18	2
▲	3	1260773	(10000000–19999999)	Gas spring, 30lb, 8.0strk	1
▲	4	222460	(10000000–19999999)	Sleeve, P/M, 0.32b 0.50d 0.5l [430ss]	1
▲	5	1025736	(10000000–19999999)	Latch	1
▲	6	24199	(10000000–19999999)	Screw, Hex, M5 X 0.80 X 16, Ss	2
▲	7	140011	(10000000–19999999)	Washer, Flat, 0.21b 0.45d .03, Ss	2
▲	8	09739	(10000000–19999999)	Nut, Hex, Lock, M5 X 0.80, Nl, Ss	2
▲	9	1200999	(10000000–19999999)	Angle, Latch	1
▲	10	1203958	(10000000–19999999)	Handle, Latch	1
▲	11	32520	(10000000–19999999)	Nut, Hex, Jam, .25–20	2
▲	12	1203946	(10000000–19999999)	Bracket Wldt, Latch	1
▲	13	1020341	(10000000–19999999)	Screw, Hex, M8 X 1.25 X 20, Ss, Sems	4
▲	14	80921	(10000000–19999999)	Bushing, Snap–In, 0.25b 0.31d 0.08th Nyl	2
▲	15	1205295	(10000000–19999999)	Handle Assy, Latch, Seat	1
▲	16	01684	(10000000–19999999)	Washer, Flat, 0.27b 0.69d .05, Ss	2
▲	17	08085	(10000000–19999999)	Pin, Cotter, Hair, 0.31d .058 Wir	1
▲	18	08712	(10000000–19999999)	Nut, Hex, Lock, M6 X 1.00, Nl, Ss	1
▲	19	1034731	(10000000–19999999)	Screw, Hex, M6 X 1.00 X 16, Ss, Sems	1
▲	20	1205764	(10000000–19999999)	Sleeve, P/M, 0.25b 0.38d 0.1l [430ss]	1
▲	21	29570	(10000000–19999999)	Washer, Flat, 0.28b 1.00d .06, Stl	1
▲▽	22	1201428	(10000000–19999999)	Seat, Dlx, W/ Armrests & Seatbelt	1
▲▲	23	1248442	(10000000–19999999)	Seatbelt, Orange, Retractable, Afmkt	1
▲	24	1077067	(10000000–19999999)	Track, N–Lkg, Seat, 12.5L, No Stud	1
▲	25	1051052	(10000000–19999999)	Spacer, Rnd, .38b .88d .38l	4
▲	26	1035038	(10000000–19999999)	Screw, Hex, .31–18 X 1.38, Ss, Nl	4
▲	27	41437	(10000000–19999999)	Nut, Hex, Lock, .31–18, Nl, Ss	4
▲	28	01685	(10000000–19999999)	Washer, Flat, 0.38b 0.88d .08, Ss	4
▲	29	1048955	(10000000–19999999)	Switch, Seat, No [Delta 6440–04]	4
▲	30	1077071	(10000000–19999999)	Track, Locking, 12.5L, No Stud W/Handle	1
▲	31	76955	(10000000–19999999)	Screw, Hex, .31–18 X 1.00, G5	4
▲	32	1077073	(10000000–19999999)	Nut, Push, Bolt Retension, Stl, 5/16 Thrd	4

Fig. 8 – Steering and Instrument Panel Group, T12

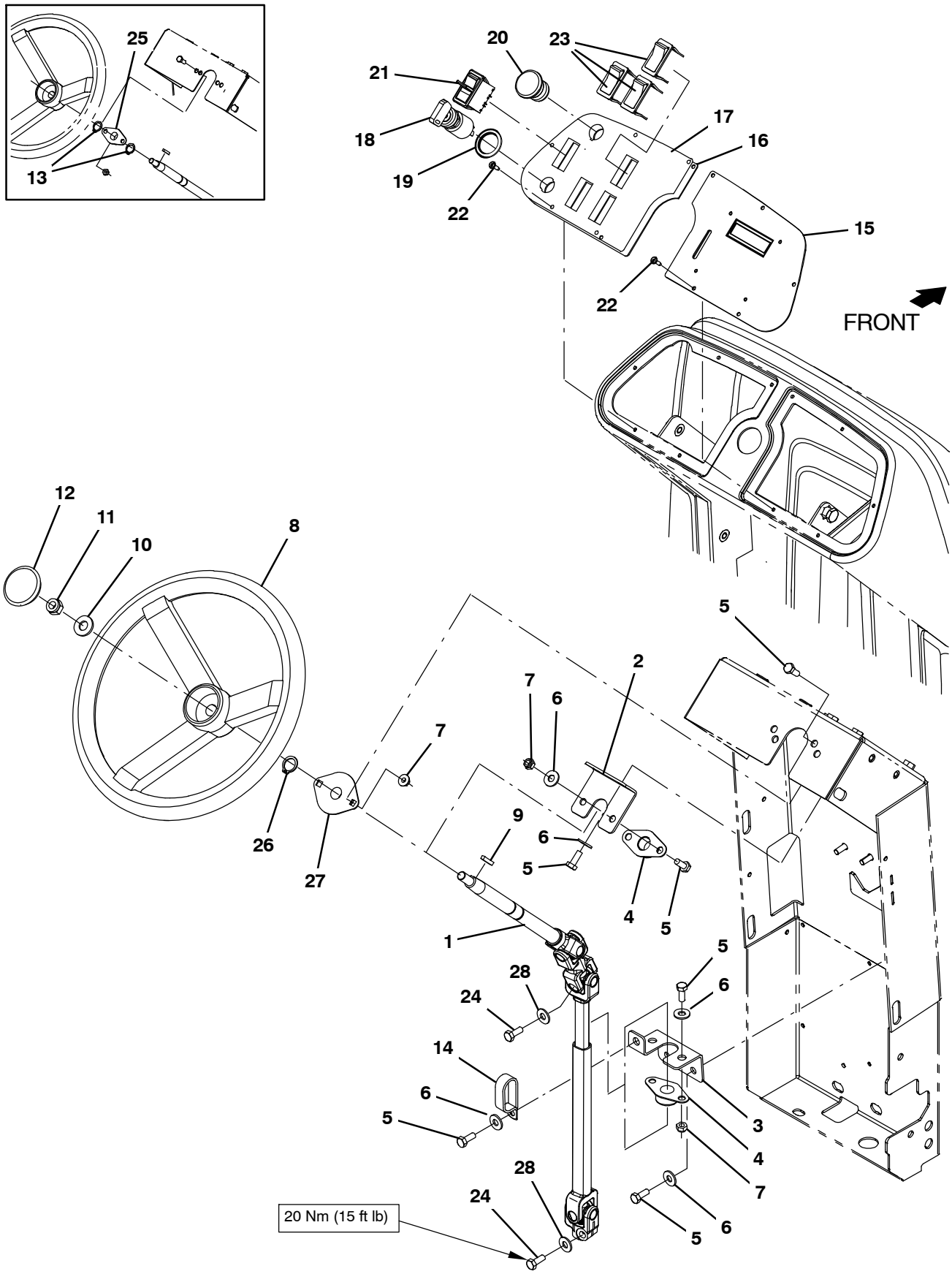

356313

Fig. 8 – Steering and Instrument Panel Group, T12

	Ref.	Part No.	Serial Number	Description	Qty.
	1	1265158	(10000000–19999999)	Shaft Assy, Steering	1
	2	1201253	(10000000–19999999)	Bracket, Mtg, Brg	1
	3	1205753	(10000000–19999999)	Bracket Wldt, Sppt, Brg	1
	4	223065	(10000000–19999999)	Bearing, Flng, 2hole, 0.75b [Nyl]	2
	5	16931	(10000000–19999999)	Screw, Hex, M8 X 1.25 X 20, 8.8	5
	6	32491	(10000000–19999999)	Washer, Flat, 0.31, Std	7
	7	08709	(10000000–19999999)	Nut, Hex, Lock, M8 X 1.25, Nl	6
	8	1036490	(10000000–19999999)	Wheel, Steering, 14.0d, Taper Bore	1
	9	00912	(10000000–19999999)	Key, Sq, 0.19 X 0.19, 1.00l	1
	10	08711	(10000000–19999999)	Nut, Hex, Lock, M12 X 1.75, Nl	1
	11	32493	(10000000–19999999)	Washer, Flat, 0.50, Std	1
	12	1038966	(10000000–19999999)	Cap, Wheel, Steering	1
	13	26428	(10000000–10638330)	Ring, Retaining, Ext, 0.75d, Hd	2
	14	09570	(10000000–19999999)	Clamp, Cable, Stl, 0.9x1.8x0.62w, 1hole	1
	15	9013277	(10000000–19999999)	Panel kit, Cntrl, Replmt [T12]	1
	16	1201180	(10000000–10962735)	Panel, Console, Lh	1
	16	1238865	(10962736–19999999)	Panel, Console, Lh	1
	17	1204177	(10000000–10962735)	Label, Opertnl, Console, Lh	1
	17	1238872	(10962736–19999999)	Label, Opertnl, Console, Lh	1
▽	18	361076	(10000000–19999999)	Switch, Ignition [Merit Gmbh]	1
▲		361144	(10000000–19999999)	Key, ignition, Sgl	1
	19	82226	(10000000–19999999)	Washer, Flat, 0.91b 1.38d .06, Stl, Pl	1
	20	1011735	(10000000–19999999)	Switch, Safety, Shutoff	1
	21	1058679	(10000000–19999999)	Switch, Rocker, Dpdt, On / None / On	1
	22	140825	(10000000–19999999)	Screw, Pan, Phl, 06 X 0.50, Fmg/Ab, Blk	10
	23	398501	(10000000–19999999)	Plug, Hole, Rt, Rocker Switch, .87 X 1.7	3
	24	39277	(10000000–19999999)	Screw, Hex, M8 X 1.25 X 25, 8.8	2
	25	223065	(10000000–10638330)	Bearing, Flng, 2hole, 0.75b [Nyl]	1
	26	26428	(10638331–19999999)	Ring, Retaining, Ext, 0.75D, Hd	1
	27	1057554	(10638331–19999999)	Bearing, Flng, 2hole, 0.75b	1
	28	39349	(10000000–19999999)	Washer, flat, 0.31, Sae	2

Fig. 9 – Steering and Instrument Panel Group, T12XP

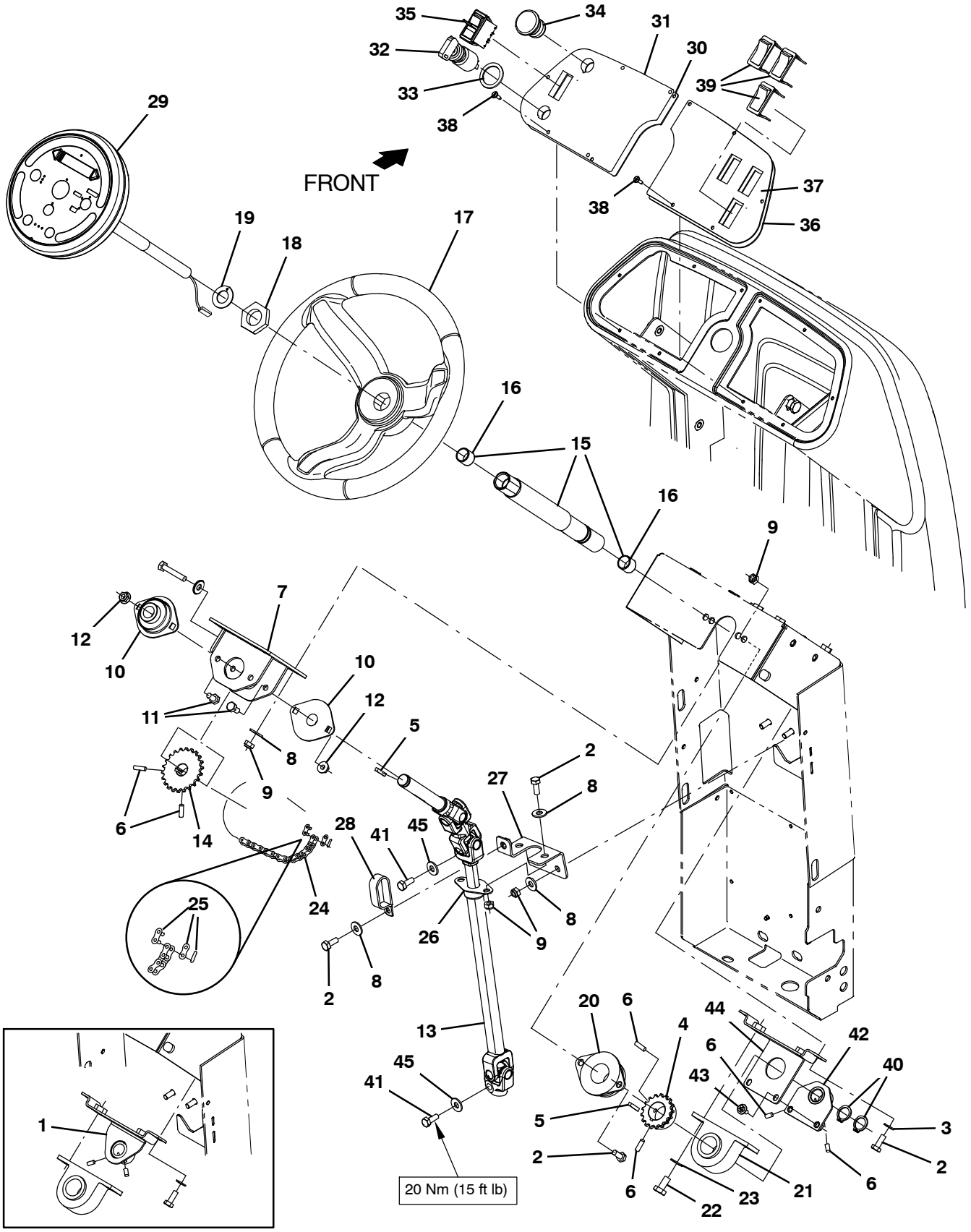

356314

Fig. 9 – Steering and Instrument Panel Group, T12XP

	Ref.	Part No.	Serial Number	Description	Qty.
	1	1200263	(10000000–10713299)	Bracket Wldt, Brg	1
	2	16931	(10000000–19999999)	Screw, Hex, M8 X 1.25 X 20, 8.8	7
	3	32490	(10000000–19999999)	Washer, Flat, 0.25, Std	2
	4	9010942	(10000000–19999999)	Sprocket Kit, 1.12b, Afmkt [T12]	1
	5	00912	(10000000–19999999)	Key, Sq, 0.19 X 0.19, 1.00l	2
	6	09162	(10000000–19999999)	Screw, Set, M6 X 1.00 X 8, Nl	6
	7	1057572	(10000000–19999999)	Plate Wldt, Sppt, Brg	1
	8	32491	(10000000–19999999)	Washer, Flat, 0.31, Std	9
	9	08709	(10000000–19999999)	Nut, Hex, Lock, M8 X 1.25, Nl	10
	10	1057554	(10000000–19999999)	Bearing, Flng, 2hole, 0.75b	2
	11	16735	(10000000–19999999)	Screw, Hex, M8 X 1.25 X 16, 8.8	4
	12	07791	(10000000–19999999)	Nut, Hex, Flng, M8 X 1.25	4
	13	1265159	(10000000–19999999)	Shaft Assy, Steering	1
	14	9010943	(10000000–19999999)	Sprocket Kit, 0.75b, Afmkt [T12]	1
▽	15	1214182	(10713300–19999999)	Tube Assy, Column, Steering	1
▲	16	1057785	(10000000–19999999)	Bearing, Journal, 0.75b 0.88d 0.75l	2
	17	1056412	(10000000–19999999)	Wheel, Steering, 14.4d	1
	18	1059073	(10000000–19999999)	Nut, Hex, Jam, 1.12–12	1
	19	04846	(10000000–19999999)	Washer, Thrust, 0.79b 1.42d 0.06[Garlok]	1
	20	1057043	(10000000–19999999)	Bearing, Flng, 2hole, 1.25b	1
	21	1054654	(10000000–19999999)	Bearing, Pillowblock, 1.12b	1
	22	06961	(10000000–19999999)	Screw, Hex, M10 X 1.5	2
	23	32485	(10000000–19999999)	Washer, Flat, 0.38, Sae	2
	24	1053977	(10000000–19999999)	Chain, Rlr, 35 X 35 Pitches	1
	25	14799	(10000000–19999999)	Link, Chain, Rlr, 35	1
	26	223065	(10000000–19999999)	Bearing, Flng, 2hole, 0.75b [Nyl]	1
	27	1205753	(10000000–19999999)	Bracket Wldt, Sppt, Brg	1
	28	09570	(10000000–19999999)	Clamp, Cable, Stl, 0.9x1.8x0.62w, 1hole	1
	29	9013157	(10000000–10713299)	Panel Assy, Steering Poc, Ci [T12]	1
	29	9010934	(10713300–19999999)	Panel, Pod, W/Instr Afmkt [T12]	1
	30	1201534	(10000000–10962735)	Panel, Console, Lh	1
	30	1238864	(10962736–19999999)	Panel, Console, Lh	1
	31	1204170	(10000000–10962735)	Label, Opertnl, Console, Lh	1
	31	1238867	(10962736–19999999)	Label, Opertnl, Console, Lh	1
▽	32	361076	(10000000–19999999)	Switch, Ignition [Merit Gmbh]	1
▲		361144	(10000000–19999999)	Key, ignition, Sgl	1
	33	82226	(10000000–19999999)	Washer, Flat, 0.91b 1.38d .06, Stl, Pl	1
	34	1011735	(10000000–19999999)	Switch, Safety, Shutoff	1
	35	1058679	(10000000–19999999)	Switch, Rocker, Dpdt, On / None / On	1
	36	1201535	(10000000–19999999)	Panel, Console, Rh	1
	37	1204176	(10000000–19999999)	Label, Opertnl, Console, Rh	1
	38	140825	(10000000–19999999)	Screw, Pan, Phl, 06 X 0.50, Fmg/Ab, Blk	10
	39	398501	(10000000–19999999)	Plug, Hole, Rt, Rocker Switch, .87 X 1.7	3
	40	70651	(10000000–19999999)	Ring, Retaining, Ext, 1.12d	2
	41	39277	(10000000–19999999)	Screw, Hex, M8 X 1.25 X 25, 8.8	2
	42	1208625	(10713300–19999999)	Plate Wldt, Brg	1
	43	1034731	(10713300–19999999)	Screw, Hex, M6 X 1.00 X 16, Sems, Ss	2
	44	1208622	(10713300–19999999)	Bracket Wldt, Brg	1
	45	39349	(10000000–19999999)	Washer, flat, 0.31, Sae	2

Fig. 10 – Front Cover and Directional Pedal Group

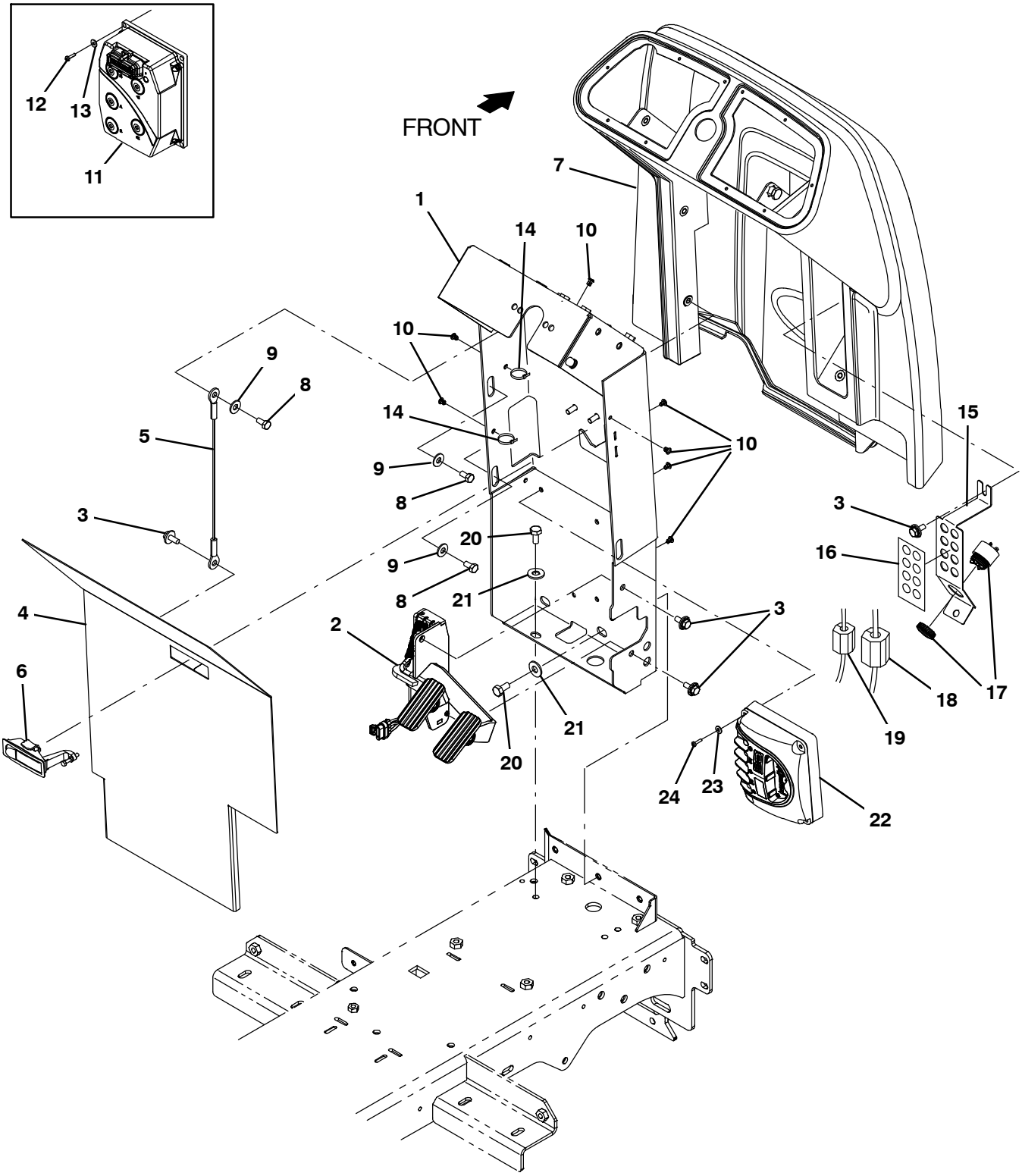

356315

Fig. 10 – Front Cover and Directional Pedal Group

Ref.	Part No.	Serial Number	Description	Qty.
1	1200146	(10000000–10863997)	Channel Wldt, Steering, Pntd	1
1	1218569	(10863998–19999999)	Channel Wldt, Steering, Pntd	1
2	1200253	(10000000–19999999)	Pedal Assy, Accelerator, Brake (See Breakdowns)	1
3	1020341	(10000000–19999999)	Screw, Hex, M8 X 1.25 X 20, Ss, Sems	5
4	9010930	(10000000–19999999)	Panel, Access, Front, Afmkt [T12]	1
4	9011168	(10000000–19999999)	Panel, Access, Front, Afmkt [Jp]	1
5	19676	(10000000–19999999)	Cable, Glv .09d 013.0l .38eye /.38eye	1
6	398806	(10000000–19999999)	Latch	1
7	9010928	(10000000–19999999)	Shroud, Front, Afmkt [T12]	1
8	15675	(10000000–19999999)	Screw, Hex, M8 X 1.25 X 16, Ss	5
9	32491	(10000000–19999999)	Washer, Flat, 0.31, Std	5
10	1202868	(10000000–19999999)	Clip, Tie, 0.25d, Plstc	7
11	1202308	(10000000–10863997)	Controller, 36vdc, 200a [Ac Propel]	1
12	24265	(10000000–10863997)	Screw, Pan, Phl, M4 X 0.70 X 16, Ss	4
13	01683	(10000000–10863997)	Washer, Flat, 10, Ss	4
14	130773	(10000000–19999999)	Tie, Cable, Nyl, 11.0l, .14w, 3.0 Max. D	7
15	1201212	(10000000–19999999)	Bracket, Ele, Cb [T12]	1
16	1201864	(10000000–19999999)	Label, Circuitbreaker	1
17	1052726	(10000000–19999999)	Alarm, 9–48vdc, 95 Db(A) [Ec–H20]	1
18	1052120	(10000000–19999999)	Inductor, 25Mmid [218 Imp At 25Mhz] (Australia Only)	1
19	1052123	(10000000–19999999)	Inductor, 18Mmid [156 Imp At 25Mhz] (Australia Only)	1
20	39283	(10000000–19999999)	Screw, Hex, M10x 1.50 x 25, 8.8	4
21	32492	(10000000–19999999)	Washer, Flat, 0.38, Std	4
22	1218104	(10863998–19999999)	Controller, Drive [T12]	1
23	19066	(10863998–19999999)	Washer, Flat, 0.25B 0.56D, .05, Pl, 10	4
24	06939	(10863998–19999999)	Screw, Pan, Phl, M5X0.80 X 45, 4.8	4

Fig. 11 – Scrub Head Lift Group

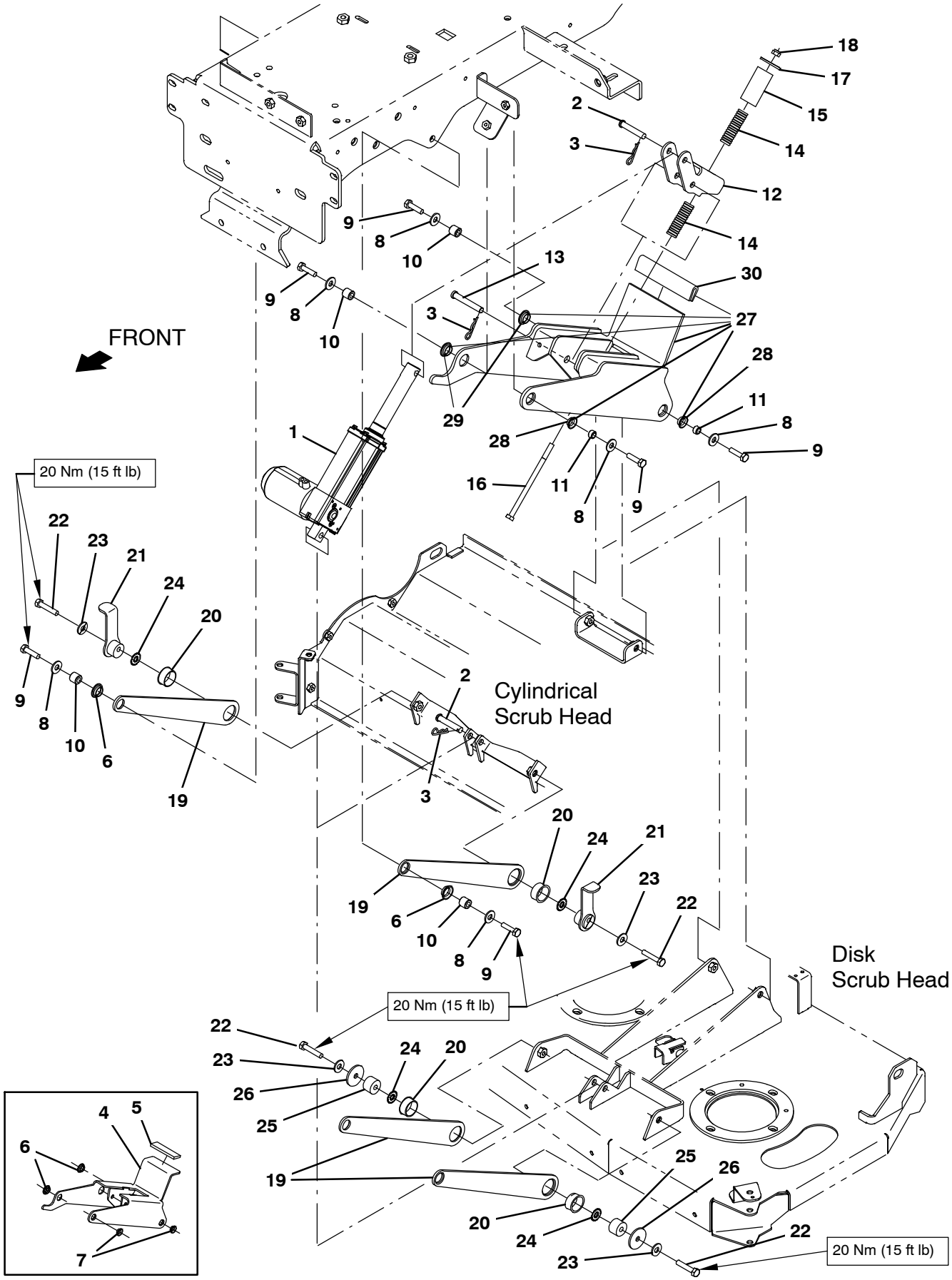

356316

Fig. 11 – Scrub Head Lift Group

	Ref.	Part No.	Serial Number	Description	Qty.
	1	1200774	(10000000–19999999)	Actuator, 36vdc, 3.9strk, 450lb	1
	2	29584	(10000000–19999999)	Pin, Clevis, 0.37d X 2.00l	2
	3	44906	(10000000–19999999)	Pin, Cotter, Hair, 0.38d .093 Wir	3
	4	1200735	(10000000–10728113)	Arm Wldt, Pivot (Replced by 9013613)	1
	5	1200440	(10000000–10728113)	Pad, Stop, Rbr (Replced by 9013613)	1
	6	04843	(10000000–10728113)	Bushing, Flng, 0.63b 0.72d 0.25l	4
	7	1054662	(10000000–10728113)	Bushing, Flng, 0.50b 0.59d 0.25l	2
	8	01685	(10000000–19999999)	Washer, Flat, 0.38b 0.88d .08, Ss	6
	9	09011	(10000000–19999999)	Screw, Hex, M8 X 1.25 X 30, Ss	6
	10	80409	(10000000–19999999)	Sleeve, P/M, 0.34b 0.63d 0.6l, Bnz	4
	11	222516	(10000000–19999999)	Sleeve, P/M, 0.32b 0.50d 0.3l [430ss]	2
	12	1200764	(10000000–19999999)	Bracket, Pivot, Spring	1
	13	365180	(10000000–19999999)	Pin, Clevis, 0.38d X 2.50l	1
	14	1203336	(10000000–19999999)	Spring, Cmpr, .73od 2.5l	2
	15	1204185	(10000000–19999999)	Tube, Bumper	1
	16	1201996	(10000000–19999999)	Screw, Hex, M8 X 1.25 X 140, Ss	1
	17	379829	(10000000–19999999)	Washer, Flat, 0.34b 1.50d .12, Stl, Pl	1
	18	08713	(10000000–19999999)	Nut, Hex, Lock, M8 X 1.25, Nl, Ss	1
	19	1201033	(10000000–19999999)	Link, Head Scb	2
	20	367313	(10000000–19999999)	Bushing, Flng, 1.00b 1.13d 0.50l	2
	21	1201080	(10000000–19999999)	Pivot Wldt	2
	22	09026	(10000000–19999999)	Screw, Hex, M8 X 1.25 X 40, Ss	2
	23	01685	(10000000–19999999)	Washer, Flat, 0.38b 0.88d .08, Ss	2
	24	41141	(10000000–19999999)	Washer, Lock, Int–Ext, 0.31	2
	25	1201354	(10000000–19999999)	Pivot, Lift	2
	26	379829	(10000000–19999999)	Washer, Flat, 0.34b 1.50d .12, Stl, Pl	2
▽	27	9013613	(10728114–19999999)	Arm Kit, Lift, Scb [T12]	1
▲	28	1054662	(10728114–19999999)	Bushing, Flng, 0.50B 0.59D 0.25L	2
▲	29	04843	(10728114–19999999)	Bushing, Flng, 0.63B 0.72D 0.25L	2
▲	30	1020168	(10728114–19999999)	Molding, Afmkt, Trim , Pvc, .08 .11, 01Ft	1

Fig. 12 – Scrub Head and Drive Motor Group, Disk

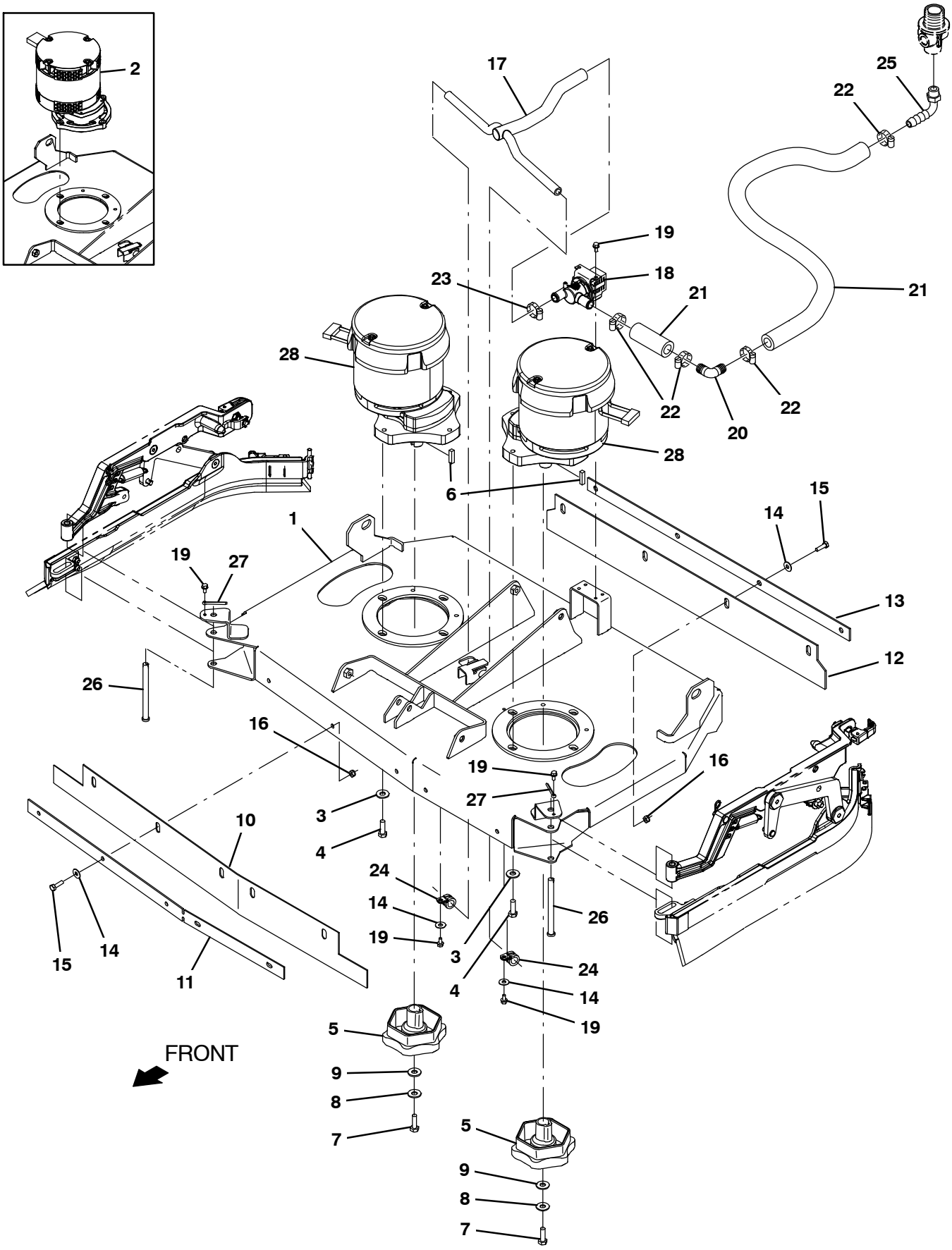

356317

Fig. 12 – Scrub Head and Drive Motor Group, Disk

	Ref.	Part No.	Serial Number	Description	Qty.
	1	1258968	(10000000–19999999)	Head Wldt, Scrbr, Disc	1
▽	2	1200168	(10000000–11056554)	Motor, Ele, 36vdc 0315rpm	2
▲		9009577	(10000000–11056554)	Brush Kit, Motor	2
	3	01685	(10000000–19999999)	Washer, Flat, 0.38b 0.88d .08, Ss	8
	4	09011	(10000000–19999999)	Screw, Hex, M8 X 1.25 X 30, Ss	8
	5	377364	(10000000–19999999)	Hub, Drive, Brush, Disk, 0.75b [6t]	2
	6	00928	(10000000–19999999)	Key, Sq, 0.25 X 0.25, 1.00l	2
	7	09010	(10000000–19999999)	Screw, Hex, M8 X 1.25 X 25, Ss	2
	8	01685	(10000000–19999999)	Washer, Flat, 0.38b 0.88d .08, Ss	2
	9	41186	(10000000–19999999)	Washer, Flat, Belleville, .31	2
	10	1201053	(10000000–19999999)	Skirt, Rbr, Front, Disc	1
	11	1201190	(10000000–19999999)	Strip, Retainer, Front	1
	12	1201127	(10000000–19999999)	Skirt, Rbr, Rear, Disc	1
	13	1201185	(10000000–19999999)	Strip, Skirt, Rear, Disc	1
	14	01684	(10000000–19999999)	Washer, Flat, 0.27b 0.69d .05, Ss	11
	15	09007	(10000000–19999999)	Screw, Hex, M6 X 1.00 X 25, Ss	9
	16	08708	(10000000–19999999)	Nut, Hex, Lock, M6 X 1.00, Nl	9
	17	1201215	(10000000–19999999)	Tube, Distribution, Disc	1
	18	1075240	(10000000–19999999)	Valve, Water, Solenoid, 36vdc Bm12/Bm12	1
	19	223198	(10000000–19999999)	Screw, Hex, M5 X 0.80 X 10, Fmg	6
	20	391365	(10000000–19999999)	Fitting, Plstc, E90, Bm10/Bm10	1
	21	1015026	(10000000–19999999)	Hose, Afmkt, Pvc, Brd, 0.62id, 03ft, Clr	1
	22	63810	(10000000–19999999)	Clamp, Hose, Wormdrive, 0.56–1.06d, .56w	4
	23	54333	(10000000–19999999)	Clamp, Hose, Wormdrive, 0.31–0.88d, .31w	1
	24	1016354	(10000000–19999999)	Clamp, Cable, Ss, 0.50d X 0.50w [Insul]	2
	25	630371	(10000000–19999999)	Fitting, Plstc, E90, Bm10/Pm08	1
	26	1205975	(10000000–19999999)	Pin, Clevis, 0.37d X 5.00l	2
	27	08236	(10000000–19999999)	Pin, Cotter, .156 X 1.25	2
▽	28	1053341	(11056555–Jan 2025)	Motor, Ele, 36vdc 0360rpm 1.00hp Gear	2
▲		1066573	(11056555–Jan 2025)	Brush Kit, Motor	1
▲		9013931	(11056555–Jan 2025)	Bearing, Motor, Ele	1
▲		9013933	(11056555–Jan 2025)	Bearing, Motor, Ele	1
	28	1261035	(Jan 2025–)	Motor, Ele, 36Vdc, 0365Rpm	1

Fig. 13 – Scrub Head Frame Group, Cylindrical

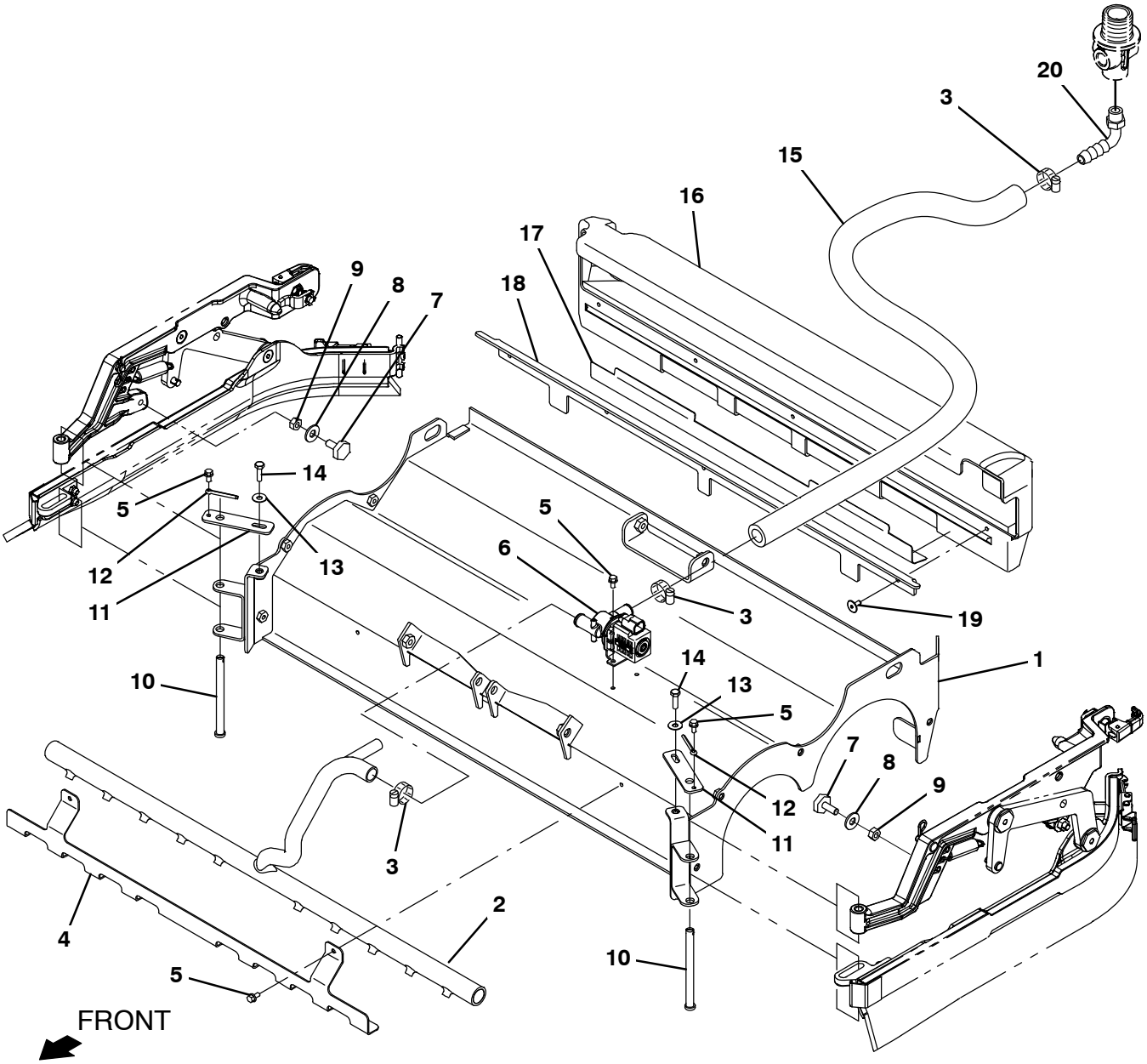

356318

Fig. 13 – Scrub Head Frame Group, Cylindrical

	Ref.	Part No.	Serial Number	Description	Qty.
	1	1200292	(10000000–19999999)	Head Wldt, Scb, Cyl	1
	2	1200012	(10000000–19999999)	Tube, Distribution, T12	1
	3	63810	(10000000–19999999)	Clamp, Hose, Wormdrive, 0.56–1.06d, .56w	3
	4	1201447	(10000000–19999999)	Bracket, Scrbr, Watertube	1
	5	223198	(10000000–19999999)	Screw, Hex, M5 X 0.80 X 10, Fmg	6
	6	1075240	(10000000–19999999)	Valve, Water, Solenoid, 36vdc Bm12/Bm12	1
	7	1204335	(10000000–19999999)	Bumper, Rbr, 1.0 Hex	2
	8	01685	(10000000–19999999)	Washer, Flat, 0.38b 0.88d .08, Ss	2
	9	07786	(10000000–19999999)	Nut, Hex, Std, M8 X 1	2
	10	1205975	(10000000–19999999)	Pin, Clevis, 0.37d X 5.00l	2
	11	1202301	(10000000–19999999)	Bracket, Retainer, Pin	2
	12	08236	(10000000–19999999)	Pin, Cotter, .156 X 1.25	2
	13	01684	(10000000–19999999)	Washer, Flat, 0.27b 0.69d .05, Ss	2
	14	08716	(10000000–19999999)	Screw, Hex, M6 X 1.00 X 20, Ss	2
	15	1015026	(10000000–19999999)	Hose, Afmkt, Pvc, Brd, 0.62id, 03ft, Clr	1
▽	16	9010927	(10000000–19999999)	Debris Tray, Cyl, Afmkt [T12]	1
▲	17	1201574	(10000000–19999999)	Angle, Stl, Perforated .03 1.4 1.4 22l	1
▲	18	1201126	(10000000–19999999)	Lip, Tray, Debris	1
▲	19	32548	(10000000–19999999)	Rivet, Blind, .188d X 0.45 X .62d, Alm	5
	20	630371	(10000000–19999999)	Fitting, Plstc, E90, Bm10/Pm08	1

Fig. 14 – Scrub Head Drive Motor Group, Cylindrical

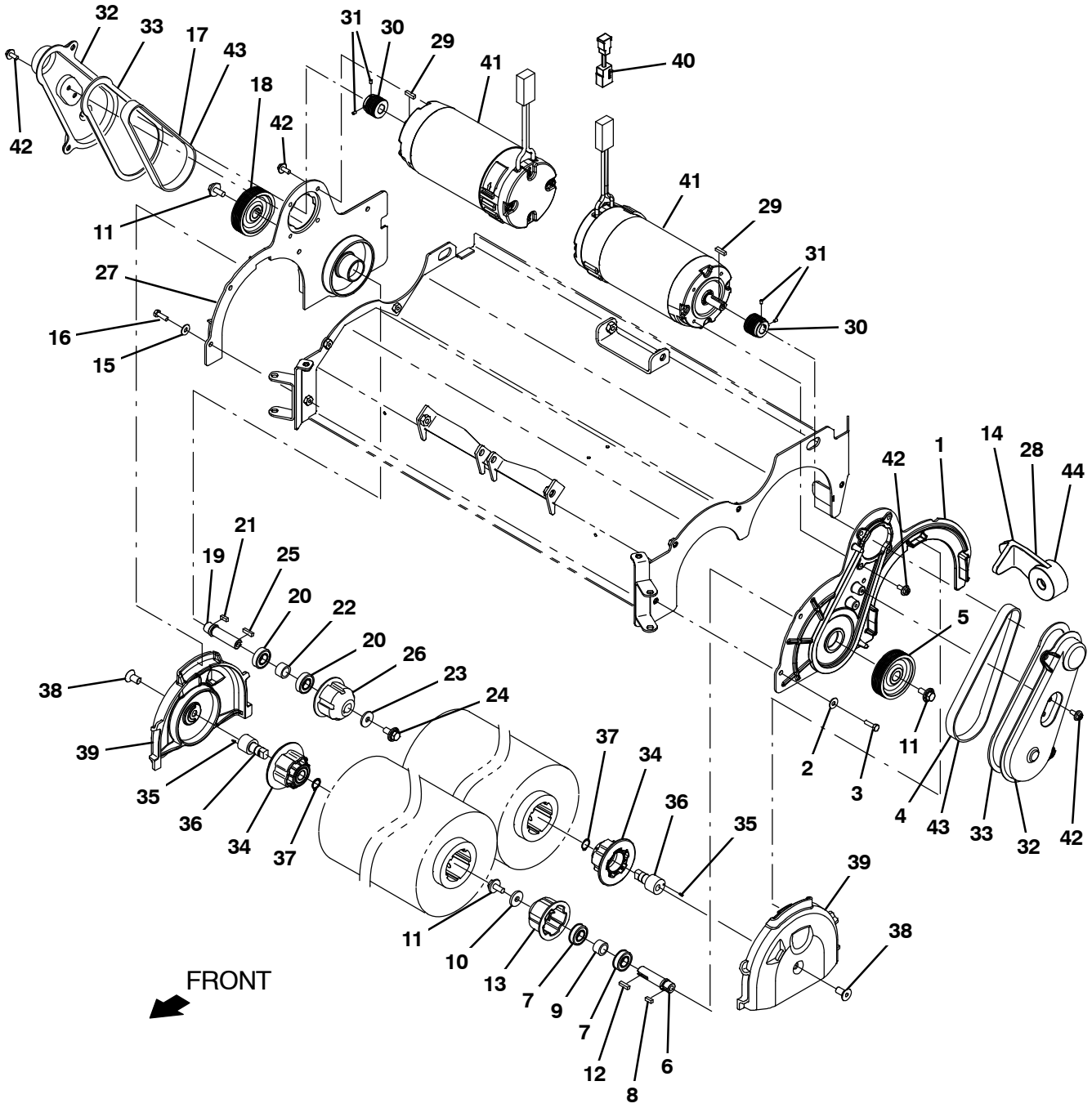

356319

Fig. 14 – Scrub Head Drive Motor Group, Cylindrical

	Ref.	Part No.	Serial Number	Description	Qty.
▽		9010939	(10000000–19999999)	Side Panel Assy, Cyl, Lh, Afmkt [T12]	1
▲	1	1200900	(10000000–19999999)	Plate, Side, Scrubhead, Lh	1
▲	2	01684	(10000000–19999999)	Washer, Flat, 0.27b 0.69d .05, Ss	4
▲	3	08716	(10000000–19999999)	Screw, Hex, M6 X 1.00 X 20, Ss	4
▲	4	1200334	(10000000–19999999)	Belt, Drive	1
▲	5	1200215	(10000000–19999999)	Sheave, 07grv, 2.96pd 0.63b [Pj]	1
▲	6	1200281	(10000000–19999999)	Shaft, Drive	1
▲	7	41360	(10000000–19999999)	Bearing, Ball, 0.59b 1.26d 0.35w[2seal]	2
▲	8	00961	(10000000–19999999)	Key, Sq, 0.19 X 0.19, 0.50l	1
▲	9	1002077	(10000000–19999999)	Tube, 0.59id 0.81od 00.5l	1
▲	10	41186	(10000000–19999999)	Washer, Flat, Belleville, .31	1
▲	11	1020341	(10000000–19999999)	Screw, Hex, M8 X 1.25 X 20, Ss, Sems	2
▲	12	00911	(10000000–19999999)	Key, Sq, 0.19 X 0.19, 0.75l	1
▲	13	378805	(10000000–19999999)	Plug, Drive, Brush, Mach	1
▲	14	1203758	(10000000–19999999)	Tool, Installation, Belt	1
▽		9010940	(10000000–19999999	Side Panel Assy, Cyl, Rh, Afmkt [T12]	1
▲	15	01684	(10000000–19999999)	Washer, Flat, 0.27b 0.69d .05, Ss	4
▲	16	08716	(10000000–19999999)	Screw, Hex, M6 X 1.00 X 20, Ss	4
▲	17	1200334	(10000000–19999999)	Belt, Drive	1
▲	18	1200215	(10000000–19999999)	Sheave, 07grv, 2.96pd 0.63b [Pj]	1
▲	19	1200281	(10000000–19999999)	Shaft, Drive	1
▲	20	41360	(10000000–19999999)	Bearing, Ball, 0.59b 1.26d 0.35w[2seal]	2
▲	21	00961	(10000000–19999999)	Key, Sq, 0.19 X 0.19, 0.50l	1
▲	22	1002077	(10000000–19999999)	Tube, 0.59id 0.81od 00.5l	1
▲	23	41186	(10000000–19999999)	Washer, Flat, Belleville, .31	1
▲	24	1020341	(10000000–19999999)	Screw, Hex, M8 X 1.25 X 20, Ss, Sems	2
▲	25	00911	(10000000–19999999)	Key, Sq, 0.19 X 0.19, 0.75l	1
▲	26	378805	(10000000–19999999)	Plug, Drive, Brush, Mach	1
▲	27	1200898	(10000000–19999999)	Plate, Side, Scrubhead, Rh	1
▲	28	1203758	(10000000–19999999)	Tool, Installation, Belt	1
	29	1014328	(10000000–19999999)	Key, Sq, 05mm X 05mm, 25mml	2
	30	1236053	(10000000–19999999)	Sheave, 07Grv, 1.22Pd 0.55B [Pj]	2
	31	222818	(10000000–19999999)	Screw, Set, Soc, 08–32 X 0.25, Nl	4
	32	1200283	(10000000–19999999)	Cover, Belt	2
	33	1201341	(10000000–19999999)	Gasket, Cover, Belt	1
▽		222752	(10000000–19999999)	Plug Assy, Idler, Brush	2
▲	34	1057629	(10000000–19999999)	Plug, Idler, Brush [Sgl Brg]	1
▲	35	222184	(10000000–19999999)	Pin, Roll, .094d X 0.25l, .094/.097	1
▲	36	222177	(10000000–19999999)	Shaft, Plug, Idler	1
▲	37	01516	(10000000–19999999)	Ring, Retaining, Ext, 0.59d, Basic	1
	38	390996	(10000000–19999999)	Screw, Flt, Soc, M10 X 1.50 X 20,10.9,Nl	2
	39	1200309	(10000000–19999999)	Door, Brush	2
	40	1059170	(10000000–19999999)	Harness, Wire, Adapter [Deutsch, Dtp]	1
	41	1053342	(10000000–19999999)	Motor, Ele, 36vdc 1750rpm 1.00hp 22.0a (See Breakdown)	2
	42	1034731	(10000000–19999999)	Screw, Hex, M6 X 1.00 X 16, Ss, Sems	12
▽		9010935	(10000000–19999999)	Belt, Cyl Head, W/Too;l, Afmkt	1
▲	43	1200334	(10000000–19999999)	Belt, Drive	2
▲	44	1203758	(10000000–19999999)	Tool, Installation, Belt	1

Fig. 15 – Scrub Head Side Squeegee Group, Right Hand

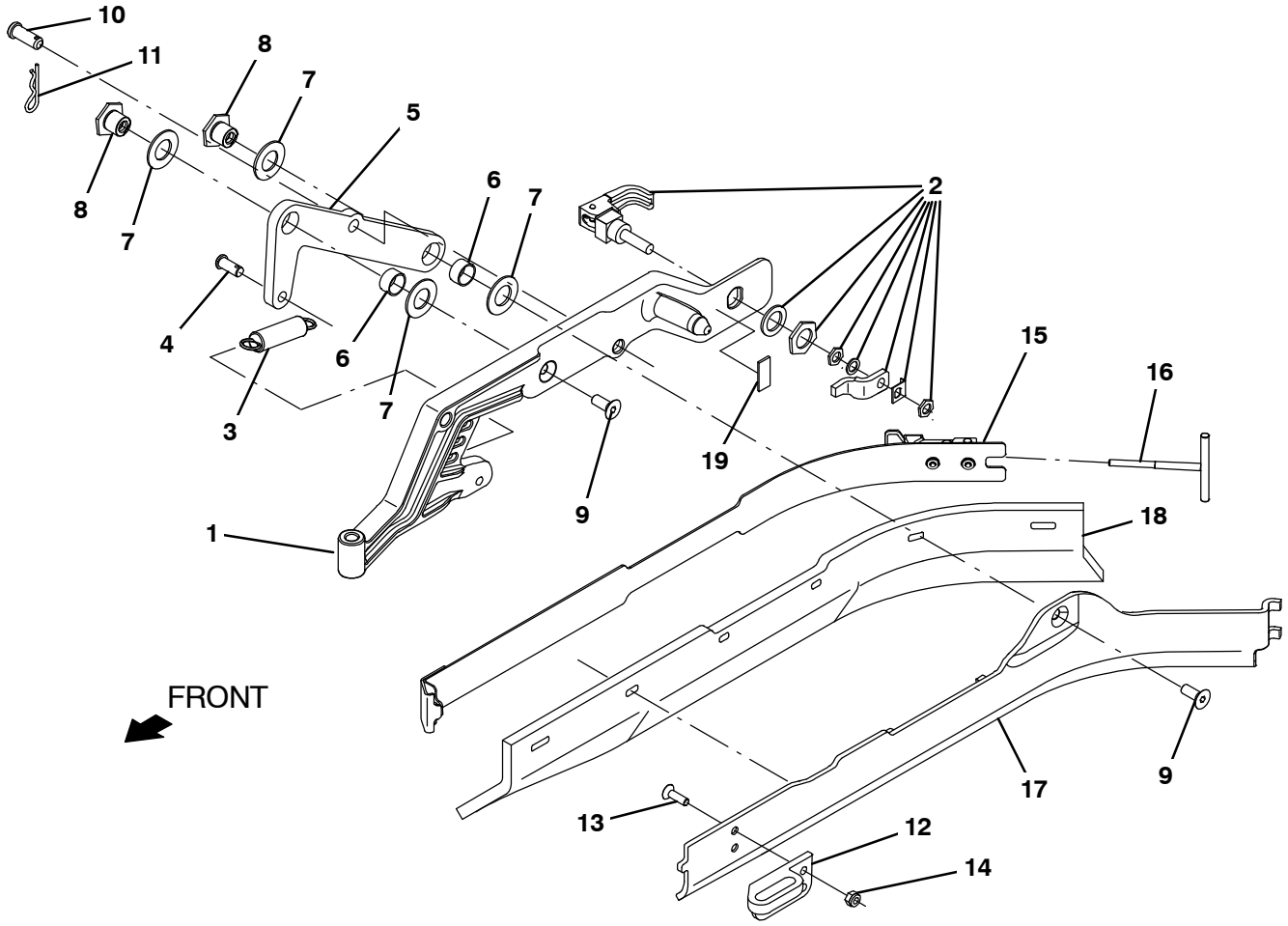

356320

Fig. 15 – Scrub Head Side Squeegee Group, Right Hand

Ref.	Part No.	Serial Number	Description	Qty.
1	1202243	(10000000–19999999)	Door, Casting, Squeegee, Rh	1
2	1065134	(10000000–19999999)	Latch, Cmpr, Yel Grip	1
3	363469	(10000000–19999999)	Spring, Extn, 0.75od 0.10wir 03.0l	1
4	46800	(10000000–19999999)	Pin, Clevis, 0.31D X 0.75L	1
5	1202100	(10000000–19999999)	Bellcrank, Lift, Sqge [T12]	1
6	71607	(10000000–19999999)	Bushing, Sleeve, 0.63b 0.72d 0.38l	2
7	64425	(10000000–19999999)	Washer, Thrust, 0.61b 1.25d .06, Fgl	4
8	1200525	(10000000–19999999)	Nut, T, M8 X 1.25	2
9	79246	(10000000–19999999)	Screw, Flt, Soc, M8 X 1.25 X 20, 18–8,Ss	2
10	09088	(10000000–19999999)	Pin, Clevis, 0.37d X 1.00l	1
11	44906	(10000000–19999999)	Pin, Cotter, Hair, 0.38d .093 Wir	1
12	1243722	(10000000–19999999)	Block, Sqge, Guide, Rh	1
13	1016421	(10000000–19999999)	Screw, Flt, M6 X 1.0 X 20, Ss	2
14	08708	(10000000–19999999)	Nut, Hex, Lock, M6 X 1.00, Nl	2
15	1201453	(10000000–19999999)	Strap Wldt, Sqge	1
16	1054312	(10000000–19999999)	Hook Wldt, Latch	1
17	1200221	(10000000–19999999)	Frame, Sqge, Side, Rh	1
18	1200430	(10000000–19999999)	Blade, Sqge, Side, 22.50l, Linatex (Standard)	1
18	1202159	(10000000–19999999)	Blade, Sqge, Side, 22.50l, Urethane (Option)	1
18	1202160	(10000000–19999999)	Blade, Sqge, Side, 22.50l, Gum (Option)	1
19	1243007	(10000000–19999999)	Gasket, Cushion, Side Squeegee Door	1

Fig. 16 – Scrub Head Side Squeegee Group, Left Hand

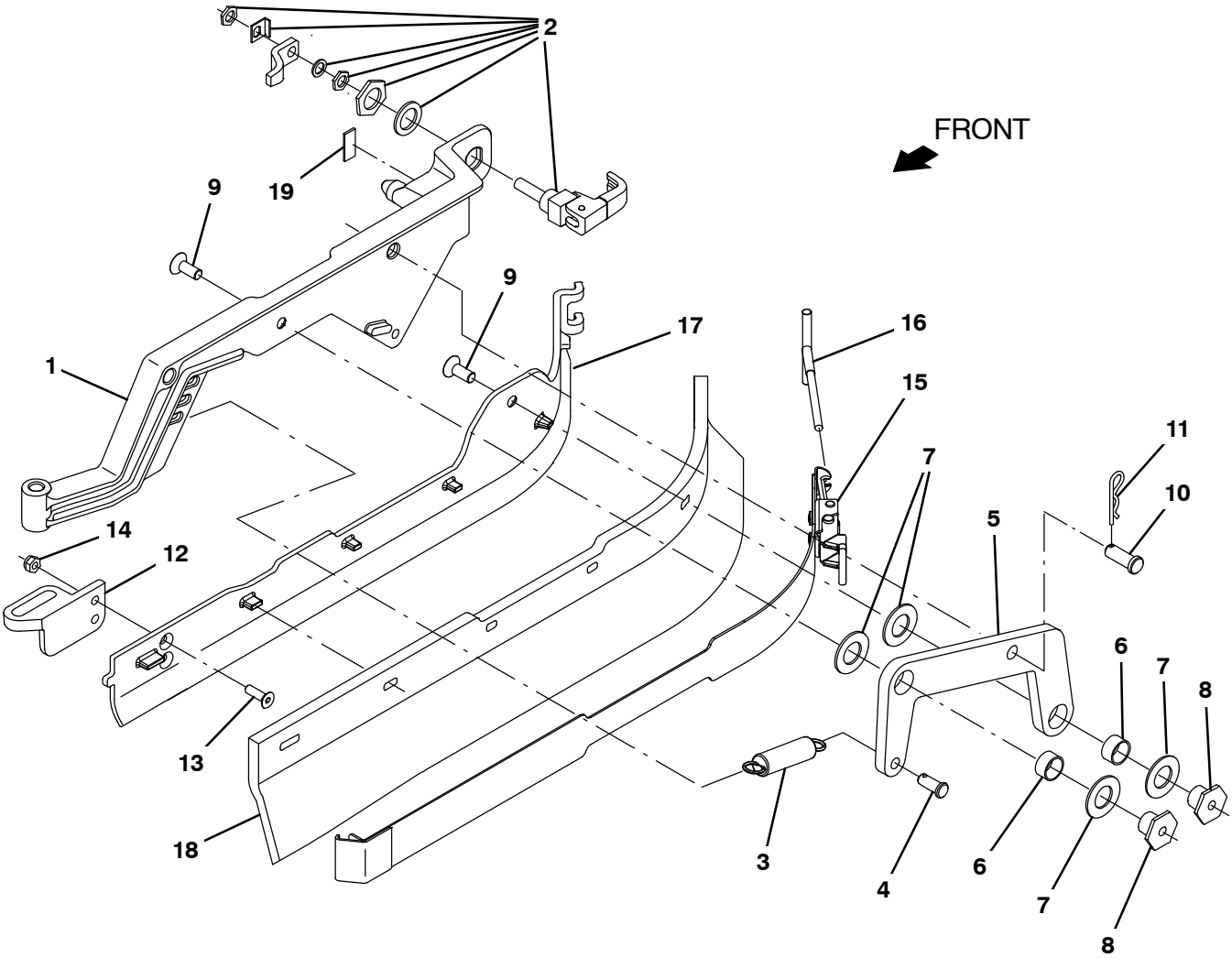

356321

Fig. 16 – Scrub Head Side Squeegee Group, Left Hand

Ref.	Part No.	Serial Number	Description	Qty.
1	1202221	(10000000–19999999)	Door, Casting, Squeegee, Lh	1
2	1065134	(10000000–19999999)	Latch, Cmpr, Yel Grip	1
3	363469	(10000000–19999999)	Spring, Extn, 0.75od 0.10wir 03.0l	1
4	46800	(10000000–19999999)	Pin, Clevis, 0.31D X 0.75L	1
5	1200213	(10000000–19999999)	Bellcrank, Lift, Sqge [T12]	1
6	71607	(10000000–19999999)	Bushing, Sleeve, 0.63b 0.72d 0.38l	2
7	64425	(10000000–19999999)	Washer, Thrust, 0.61b 1.25d .06, Fgl	4
8	1200525	(10000000–19999999)	Nut, T, M8 X 1.25	2
9	79246	(10000000–19999999)	Screw, Flt, Soc, M8 X 1.25 X 20, 18–8,Ss	2
10	09088	(10000000–19999999)	Pin, Clevis, 0.37d X 1.00l	1
11	44906	(10000000–19999999)	Pin, Cotter, Hair, 0.38d .093 Wir	1
12	1243718	(10000000–19999999)	Block, Guide, Sqge	1
13	1016421	(10000000–19999999)	Screw, Flt, M6 X 1.0 X 20, Ss	2
14	08708	(10000000–19999999)	Nut, Hex, Lock, M6 X 1.00, Nl	2
15	1201453	(10000000–19999999)	Strap Wldt, Sqge	1
16	1054312	(10000000–19999999)	Hook Wldt, Latch	1
17	1200011	(10000000–19999999)	Frame, Sqge, Side, Lh	1
18	1200430	(10000000–19999999)	Blade, Sqge, Side, 22.50l, Linatex (Standard)	1
18	1202159	(10000000–19999999)	Blade, Sqge, Side, 22.50l, Urethane (Option)	1
18	1202160	(10000000–19999999)	Blade, Sqge, Side, 22.50l, Gum (Option)	1
19	1243007	(10000000–19999999)	Gasket, Cushion, Side Squeegee Door	1

Fig. 17 – Recovery Tank Group

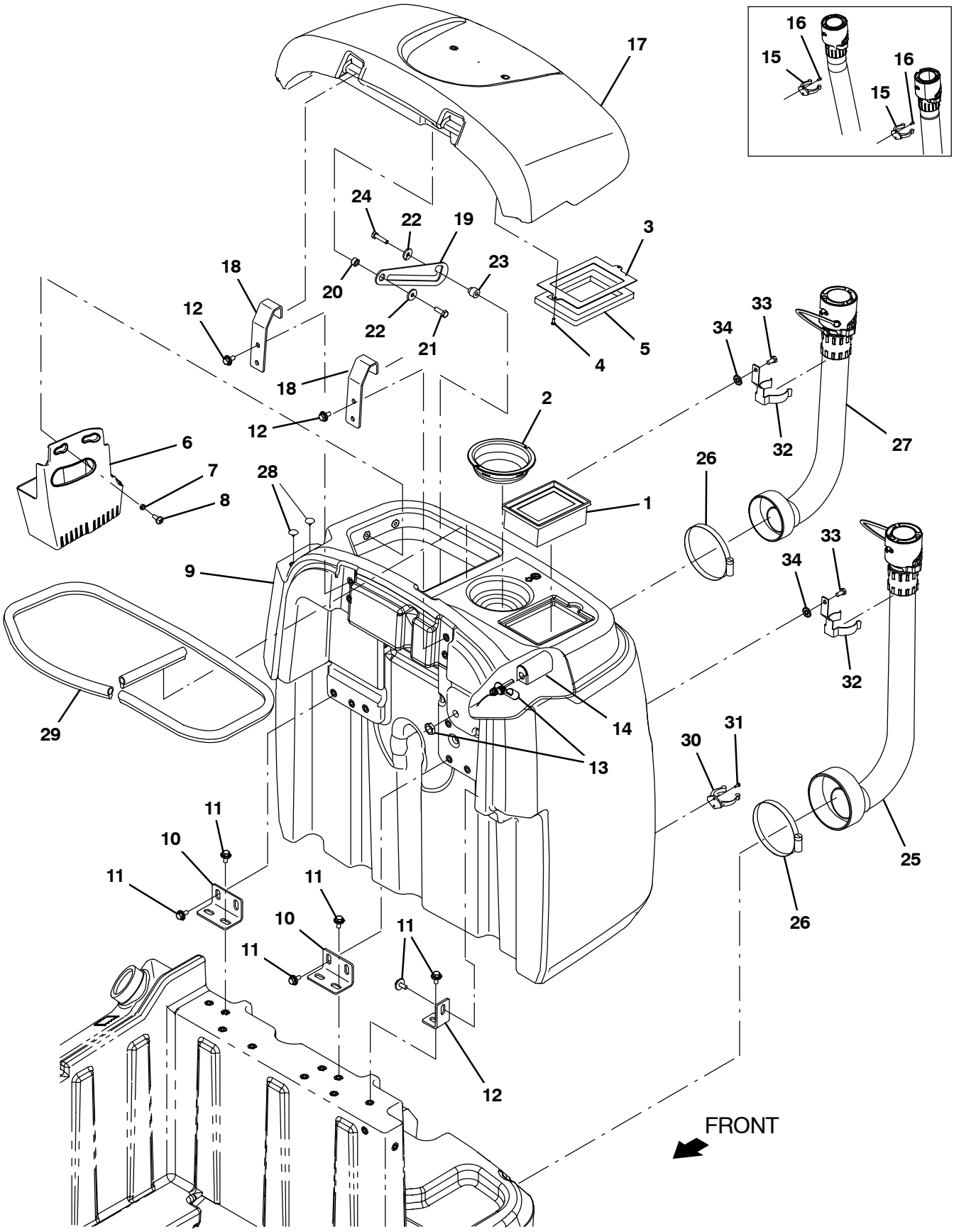

356322

Fig. 17 – Recovery Tank Group

Ref.	Part No.	Serial Number	Description	Qty.
1	1037821	(10000000–19999999)	Filter, Panl, Dust, 2.3 X 04.5 X 06.4	1
2	1026014	(10000000–19999999)	Screen, Vacuum	1
3	1201157	(10000000–19999999)	Plate, Mtg, Gasket	1
4	140825	(10000000–19999999)	Screw, Pan, Phl, 06 X 0.50, Fmg/Ab, Blk	2
5	1016392	(10000000–19999999)	Gasket, Ure, .50, 03.74w 05.31l, Adh	1
6	1201340	(10000000–19999999)	Tray, Debris	1
7	1066720	(10000000–19999999)	Sleeve, P/M, 0.32b 0.44d 0.2l [430ss]	2
8	09737	(10000000–19999999)	Screw, Pan, Phl, M8 X 1.25 X 20, 4.8	2
9	9010920	(10000000–19999999)	Recovery Tank, Afmkt [T12]	1
9	9011173	(10000000–19999999)	Recovery Tank, Afmkt, Jp [T12]	1
10	1200458	(10000000–19999999)	Bracket, Mtg, Tank	3
11	1020341	(10000000–19999999)	Screw, Hex, M8 X 1.25 X 20, Ss, Sems	18
12	1054823	(10000000–19999999)	Angle, Mtg, Tank	1
13	385685	(10000000–19999999)	Sensor, Level, Liq, 14vdc 01a .62–11	1
14	1019285	(10000000–19999999)	Bracket, Protector, Float Switch	1
15	1200746	(10000000–10872535)	Clip, Hose, Plstc 1.88–2.12	2
16	49697	(10000000–10872535)	Screw, Pan, Phl, M4 X 0.70 X 10, Ss	4
17	9010921	(10000000–19999999)	Cover, Recovery Tank, Afmkt [T12]	1
18	1200519	(10000000–19999999)	Bracket, Mtg, Cover	2
19	1057214	(10000000–19999999)	Plate, Arm, Prop	1
20	360460	(10000000–19999999)	Sleeve, P/M, 0.34b 0.63d 0.4l, Ss / Oil	1
21	12333	(10000000–19999999)	Screw, Hex, M8 X 1.25 X 25, Ss, Nl	1
22	1017218	(10000000–19999999)	Washer, Flat, 0.32b 1.00d .12, Ss	2
23	230735	(10000000–19999999)	Sleeve, P/M, Flng, 0.33b 0.75/0.50d 0.8l	1
24	59658	(10000000–19999999)	Screw, Hex, M8 X 1.25 X 35, Nl, Ss	1
25	9013951	(10000000–10872535)	Hose Kit, Mtg, Brkt T12 (819.0) (Solution Tank)	1
25	1216347	(10872536–19999999)	Hose Assy, Drain. 2.0ID x 32.2L, Blk (Solution Tank)	1
26	1201434	(10000000–19999999)	Clamp, Hose, Wormdrive, 4.63–5.50, 0.5w	2
27	9013950	(10000000–10872535)	Hose kit, Mtg, Brk, T12 (665.5) (Recovery Tank)	1
27	1216370	(10872536–19999999)	Hose Assy, Drain, 2.0Id X 26.2L, Blk (Recovery Tank)	1
28	1066063	(10000000–19999999)	Plug, Hole, Rnd, 0.25H 0.43L, Brb, Nyl	4
29	1066433	(10000000–19999999)	Seal, Afmkt, Bulb, Dual, 08ft [F/.30gap]	1
30	1200746	(10000000–19999999)	Clip, Hose, Plstc 1.88–2.12	1
31	49697	(10000000–19999999)	Screw, Pan, Phl, M4 X 0.70 X 10, Ss	2
32	1213730	(10872536–19999999)	Bracket, Mtg, Hose	2
33	15675	(10872536–19999999)	Screw, Hex, M8 X 1.25 X 16, Ss	2
34	41141	(10872536–19999999)	Washer, Lock, Int–Ext, 0.31	2

Fig. 18 – Vacuum Fan Group

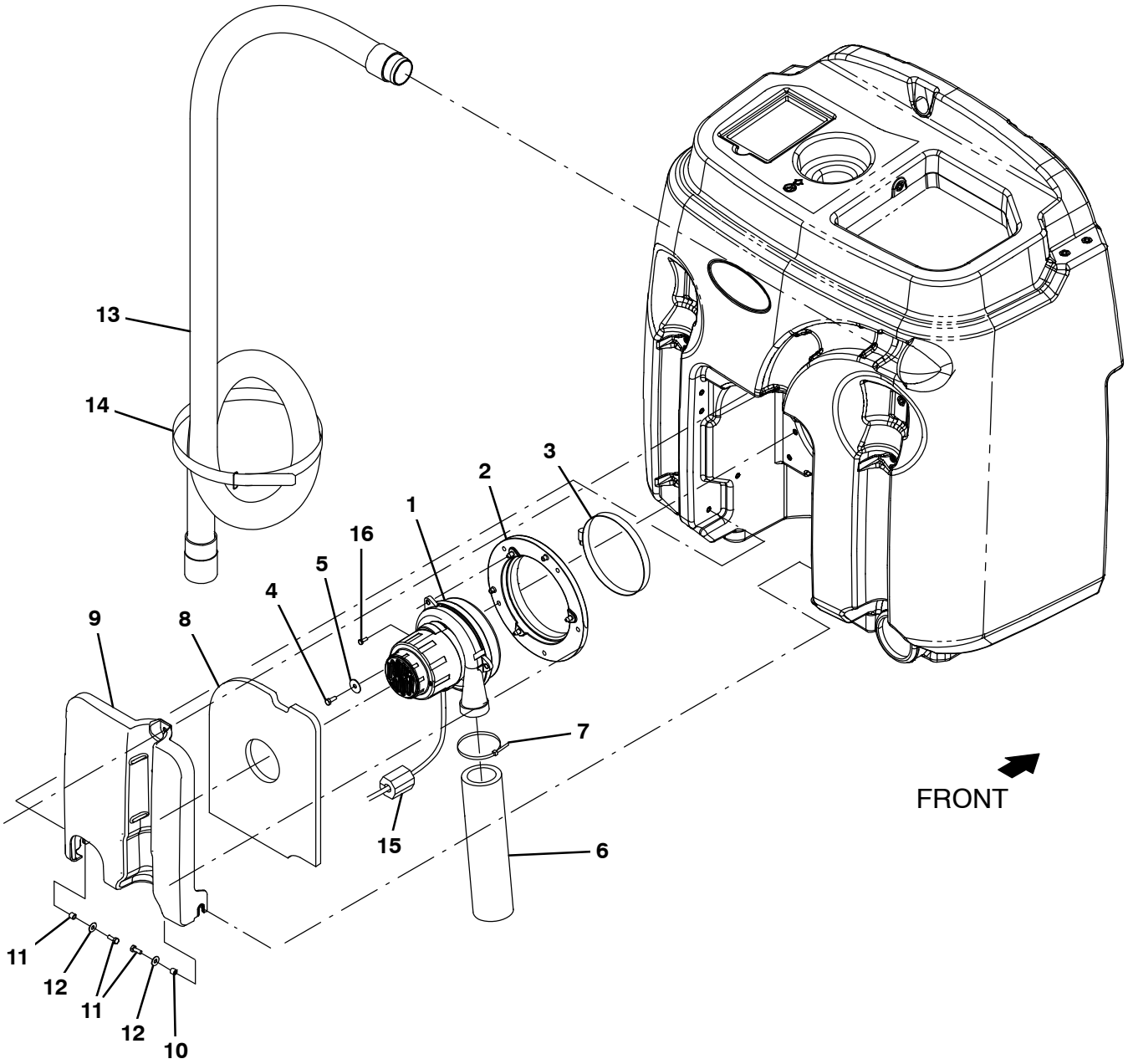

356323

Fig. 18 – Vacuum Fan Group

	Ref.	Part No.	Serial Number	Description	Qty.
▽	1	1200149	(10000000–19999999)	Fan, Vac, 6.6 Dia, Ametek	1
▲		1206774	(10000000–19999999)	Brush Kit, Motor, Fan	1
	2	1201267	(10000000–19999999)	Assy, Seal, Mtg, Vacfan	1
	3	49891	(10000000–19999999)	Clamp, Hose, Wormdrive, 5.56–6.50d, .56w	1
	4	08716	(10000000–19999999)	Screw, Hex, M6 X 1.00 X 20, Ss	5
	5	29570	(10000000–19999999)	Washer, Flat, 0.28b 1.00d .06, Stl	5
	6	1203848	(10000000–19999999)	Muffler, Vacfan, 11.0 L	1
	7	130773	(10000000–19999999)	Tie, Cable, Nyl, 11.0l, .14w, 3.0 Max. D	1
	8	1200369	(10000000–19999999)	Insulation, Acstc, 0.5, 10.4 X 13.0 C–0	1
	9	1200649	(10000000–19999999)	Cover, Fan, Vacuum	1
	10	140154	(10000000–19999999)	Sleeve, P/M, 0.25b 0.38d 0.3l, Pl	2
	11	15678	(10000000–19999999)	Screw, Hex, M6 X 1.00 X 16, Ss	2
	12	01684	(10000000–19999999)	Washer, Flat, 0.27b 0.69d .05, Ss	2
	13	1201875	(10000000–19999999)	Hose, Vacuum, 1.75id X 68.6l, 2 Cuff	1
	14	1067964	(10000000–19999999)	Fastener, 25.0 [Hook & Loop]	1
	15	1052126	(10000000–19999999)	Inductor, 12.7Mmid [156 Imp At 25Mz] (Australia Only)	1
	16	16944	(10000000–19999999)	Screw, hex, m4 X 0.70 X 10, Fmg	1

Fig. 19 – Solution Tank Group

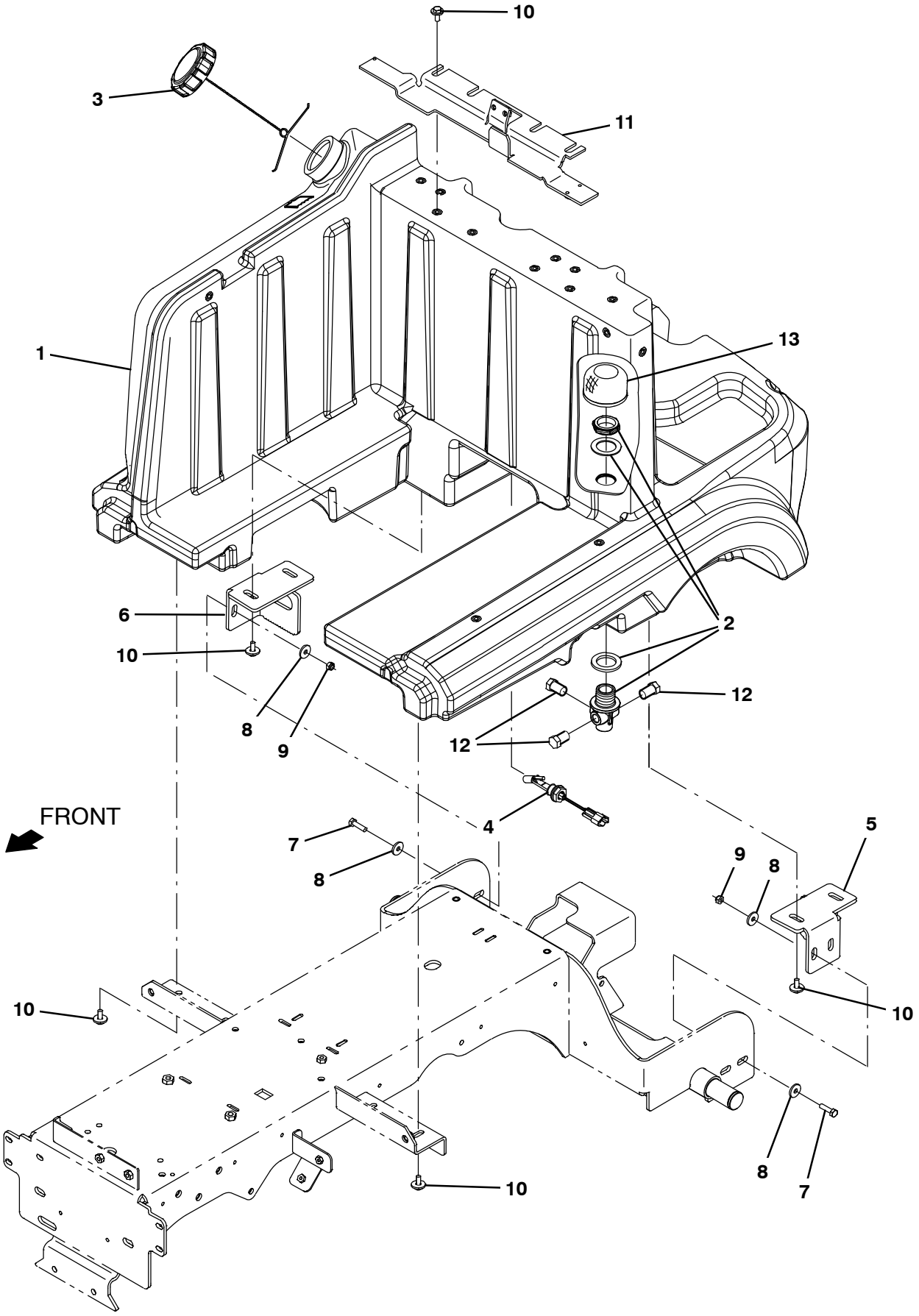

356324

Fig. 19 – Solution Tank Group

Ref.	Part No.	Serial Number	Description	Qty.
1	9010919	(10000000–19999999)	Solution Tank, Afmkt [T12]	1
2	1059317	(10000000–19999999)	Fitting Assy, Soltn, Bh	1
3	1011885	(10000000–19999999)	Cap, Tank	1
4	1201588	(10000000–19999999)	Sensor, Level, Liq, 30watt, Spst	1
5	1201077	(10000000–19999999)	Bracket, Sppt, Tank, Lh	1
6	1201079	(10000000–19999999)	Bracket, Sppt, Tank, Rh	1
7	12317	(10000000–19999999)	Screw, Hex, M10 X 1.50 X 30, Ss	4
8	01686	(10000000–19999999)	Washer, Flat, 0.44b 1.00d .08, Ss	8
9	08714	(10000000–19999999)	Nut, Hex, Lock, M10 X 1.5, Nl, Ss	4
10	1020341	(10000000–19999999)	Screw, Hex, M8 X 1.25 X 20, Ss, Sems	12
11	1205727	(10000000–19999999)	Bracket Wldt, Sppt, Seat	1
12	630146	(10000000–19999999)	Fitting, Plug, Pm06, Nyl	3
13	1027290	(10000000–19999999)	Filter, Soltn, 020Mesh, Pm12 3.1D 02.6L	1

Fig. 20 – Rear Squeegee Lift Group

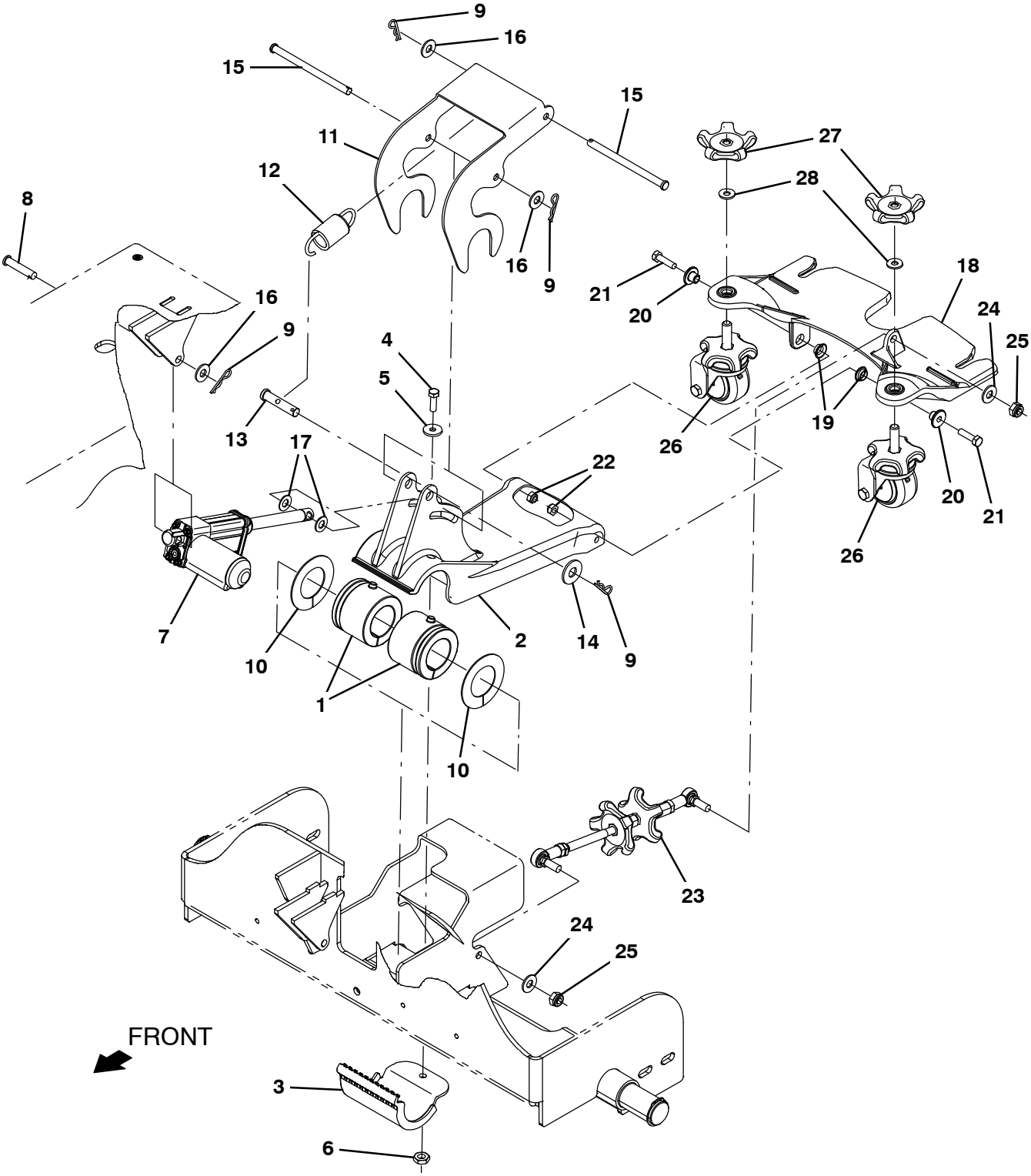

356325

Fig. 20 – Rear Squeegee Lift Group

Ref.	Part No.	Serial Number	Description	Qty.
1	1053815	(10000000–19999999)	Bushing, Flex, Ure	2
2	1053870	(10000000–19999999)	Arm, Lift, Sqge	1
3	1053814	(10000000–19999999)	Clamp, Pivot, Link	1
4	09010	(10000000–19999999)	Screw, Hex, M8 X 1.25 X 25, Ss	1
5	1017218	(10000000–19999999)	Washer, Flat, 0.32b 1.00d .12, Ss	1
6	08713	(10000000–19999999)	Nut, Hex, Lock, M8 X 1.25, Nl, Ss	3
7	1201489	(10000000–19999999)	Actuator, 36vdc, 02.0strk, 0180lb	1
8	94877	(10000000–19999999)	Pin, Clevis, 10mmd X	1
9	44906	(10000000–19999999)	Pin, Cotter, Hair, 0.38d .093 Wir	4
10	1059969	(10000000–19999999)	Washer, Thrust, 1.81b 2.93d .06w, Plstc	2
11	1059316	(10000000–19999999)	Link, Tensioner, Spring	1
12	1201370	(10000000–19999999)	Spring, Extn, 1.26od 0.162wir 03.3l	1
13	1059498	(10000000–19999999)	Pin, Clevis, 0.50d X 2.25l	1
14	32493	(10000000–19999999)	Washer, Flat, 0.50, Std	1
15	1059338	(10000000–19999999)	Pin, Clevis, 0.37d X 5.25l	2
16	01686	(10000000–19999999)	Washer, Flat, 0.44b 1.00d .08, Ss	5
17	1018151	(10000000–19999999)	Washer, Flat, 0.44b 0.88d .06, Nyl	2
18	1204957	(10000000–19999999)	Coupling, Sqge	1
19	1054662	(10000000–19999999)	Bushing, Flng, 0.50b 0.59d 0.25l	2
20	1059990	(10000000–19999999)	Sleeve, Flng, 0.32b 1.00/0.50d 0.6l, Ss	2
21	09011	(10000000–19999999)	Screw, Hex, M8 X 1.25 X 30, Ss	2
22	08713	(10000000–19999999)	Nut, Hex, Lock, M8 X 1.25, Nl, Ss	2
23	9010937	(10000000–19999999)	Turnbuckle Replmt, Afmkt [T12]	1
24	01686	(10000000–19999999)	Washer, Flat, 0.44b 1.00d .08, Ss	2
25	08714	(10000000–19999999)	Nut, Hex, Lock, M10 X 1.5, Nl, Ss	2
26	1205850	(10000000–19999999)	Caster Assy, Swivel	2
27	1055516	(10000000–19999999)	Knob Assy, Star, 3.21d 5ear M12	2
28	578430	(10000000–19999999)	Washer, Flat, 0.50d, Pl [Spring–Disc]	2

Fig. 21 – Rear Squeegee Kit

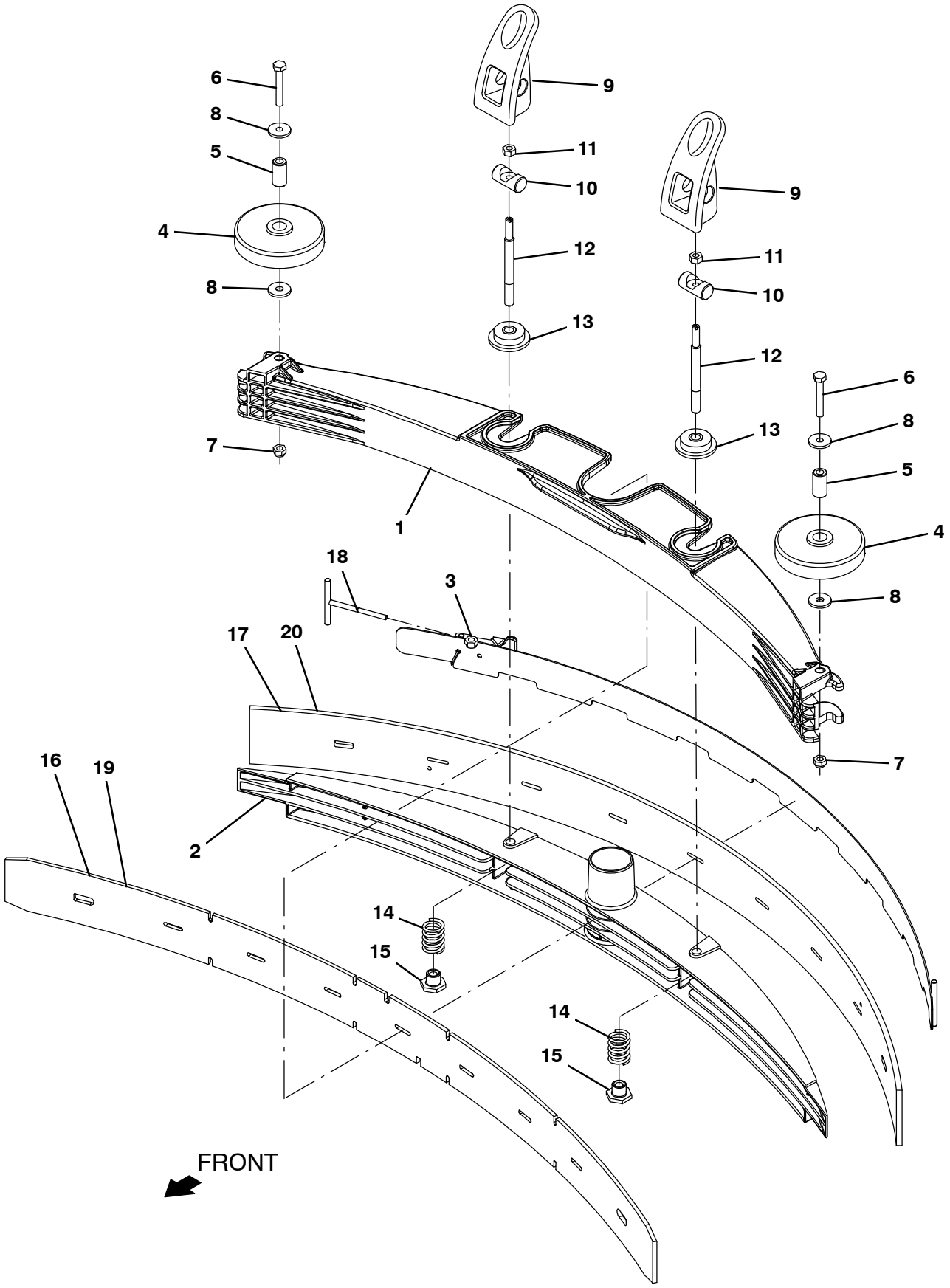

356326

Fig. 21 – Rear Squeegee Kit

	Ref.	Part No.	Serial Number	Description	Qty.
▽		9009817	(10000000–19999999)	Squeegee Kit, Rear, Ci [T12]	1
▲	1	1200219	(10000000–19999999)	Frame, Sqge, Outer	1
▲	2	1200218	(10000000–19999999)	Frame, Sqge, Inner	1
▲	3	1200466	(10000000–19999999)	Clamp Wldt, Retainer, Sqge	1
▲	4	363162	(10000000–19999999)	Wheel, 04.0d 0.89w 0.64b	2
▲	5	363301	(10000000–19999999)	Sleeve, P/M, 0.34b 0.63d 1.2l, Bnz	2
▲	6	49694	(10000000–19999999)	Screw, Hex, M8 X 1.25 X 50, Ss	2
▲	7	08713	(10000000–19999999)	Nut, Hex, Lock, M8 X 1.25, Nl, Ss	2
▲	8	1017218	(10000000–19999999)	Washer, Flat, 0.32b 1.00d .12, Ss	4
▲	9	1052532	(10000000–19999999)	Grip, Lock	2
▲	10	1055396	(10000000–19999999)	Pin, 0.63d, 02.0l [W/Cbore, M8 Screw]	2
▲	11	07786	(10000000–19999999)	Nut, Hex, Std, M8 X 1	2
▲	12	1057407	(10000000–19999999)	Rod, Thrd, 2end, M8x1.25/ M10x1.5 04.7l	2
▲	13	1055506	(10000000–19999999)	Ring, Mtg, Sqge, .38l	2
▲	14	1064770	(10000000–19999999)	Spring, Cmpr, 0.98od .13wir 01.3l, Ss	2
▲	15	391345	(10000000–19999999)	Nut, T, M10 X 1.50 X 0.62od X 0.5l	2
▲	16	1200383	(10000000–19999999)	Blade, Sqge, Front, 42.59l [Linard]	1
▲	17	1200384	(10000000–19999999)	Blade, Sqge, Rear, 44.96l Linatex	1
▲	18	1054312	(10000000–19999999)	Hook Wldt, Latch	
	19	1201825	(10000000–19999999)	Blade, Sqge, Front, 42.59L [Gum] (Option)	1
	19	1201823	(10000000–19999999)	Blade, Sqge, Front, 42.59l [Urethane] (Option)	1
	19	1212213	(10000000–19999999)	Blade, Sqge, Front, Tile, Tile, 42.59L [Linard} (Option)	1
	20	1201826	(10000000–19999999)	Blade, Sqge, Rear, 44.96l Gum (Option)	1
	20	1201824	(10000000–19999999)	Blade, Sqge, Rear, 44.96l Urethane (Option)	1

Fig. 22 – Electrical Circuit Board Group

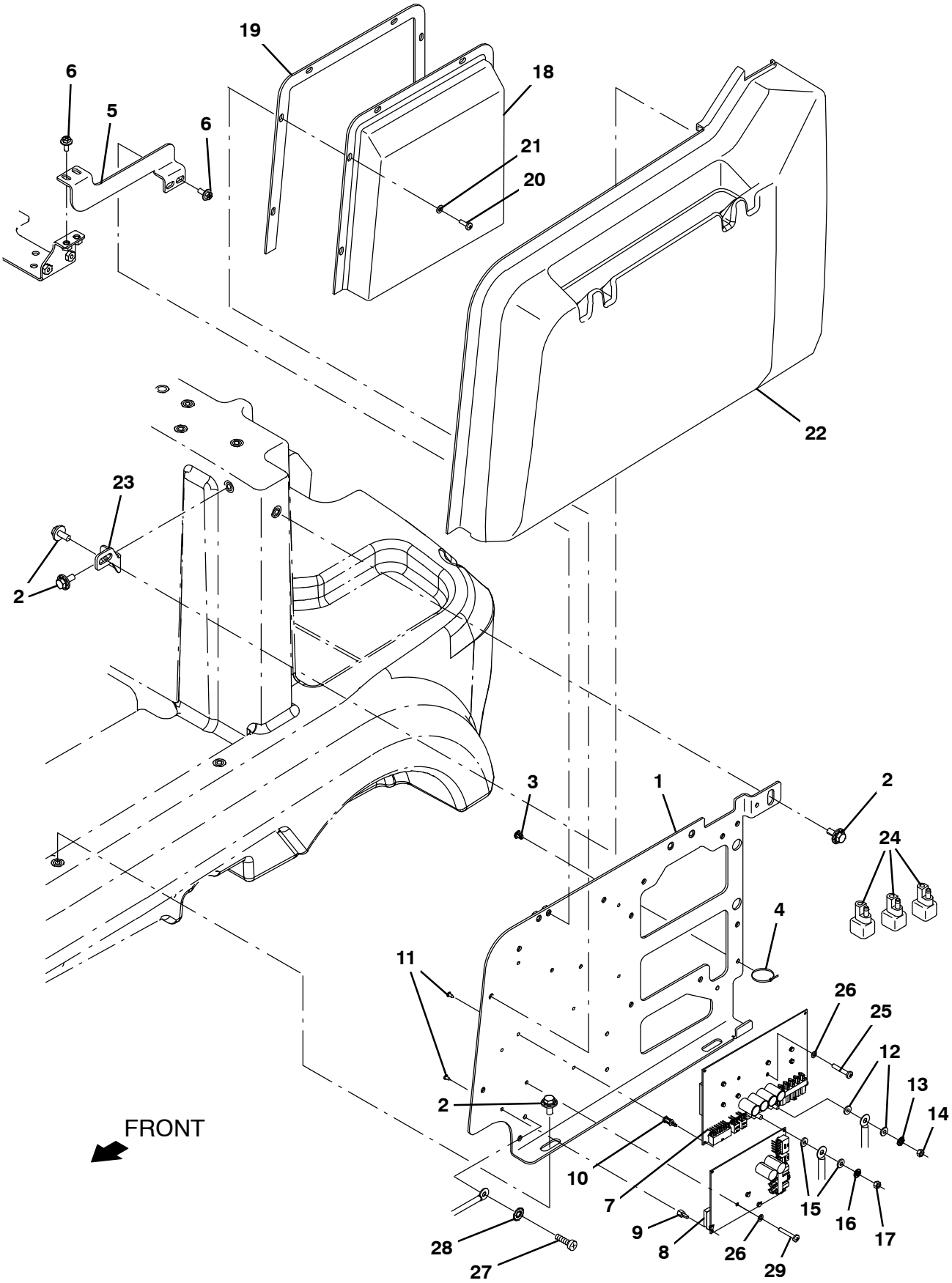

356327

Fig. 22 – Electrical Circuit Board Group

Ref.	Part No.	Serial Number	Description	Qty.
1	1200918	(10000000–19999999)	Plate Wldt, Mtg, Electronic Component	1
2	1020341	(10000000–19999999)	Screw, Hex, M8 X 1.25 X 20, Ss, Sems	5
3	1202868	(10000000–19999999)	Clip, Tie, 0.25d, Plstc	7
4	130773	(10000000–19999999)	Tie, Cable, Nyl, 11.0l, .14w, 3.0 Max. D	7
5	1203717	(10000000–19999999)	Bracket, Stiffener	1
6	1034731	(10000000–19999999)	Screw, Hex, M6 X 1.00 X 16, Ss, Sems	4
7	9010931	(10000000–19999999)	Circuit Board Kit, Scrub, Afmkt [T12]	1
8	9010932	(10000000–19999999)	Circuit board Kit, H20_Sba, Afmkt [T12]	1
9	1016825	(10000000–19999999)	Support, Circuitboard	4
10	1202869	(10000000–19999999)	Support, Circuitboard [0.5”]	4
11	3701.6	(10000000–19999999)	Screw, Pan, Phl, 06–32 x 0.38, Shmtl, Ss	8
12	1202862	(10000000–19999999)	Washer, Flat, .21b .39d .04, Brs	2
13	07514	(10000000–19999999)	Washer, Lock, Int, 10, Ss	1
14	1202864	(10000000–19999999)	Nut, Hex, Std, M5 X 0.80, Brs	1
15	1061918	(10000000–19999999)	Washer, Flat, 0.25b 0.47d .06, Brs	2
16	07515	(10000000–19999999)	Washer, Lock, Int, 0.25, Ss	1
17	1061910	(10000000–19999999)	Nut, Hex, Std, M6 X 1.00, Brs	1
18	1200792	(10000000–19999999)	Cover, Box, Circuitboard	1
19	1201210	(10000000–19999999)	Gasket, Cover, Circuitboard	1
20	06934	(10000000–19999999)	Screw, Pan, Phl, M5 X 0.80 X 20, 4.8	6
21	140011	(10000000–19999999)	Washer, Flat, 0.21b 0.45d .03, Ss	6
22	9010922	(10000000–19999999)	Side Cover, Std, Afmkt [T12]	1
23	1201024	(10000000–19999999)	Bracket, Mtg, Panel	1
24	222290	(10000000–19999999)	Diode, Ele, Plug	3
25	06929	(10000000–19999999)	Screw, Pan, Phl, M4 X 0.70 X 25, 4.8	2
26	1202860	(10000000–19999999)	Washer, Flat, 0.17b 0.31d .03, Nyl	3
27	24199	(10000000–19999999)	Screw, Hex, M5 X 0.80 X 16, Ss	1
28	41140	(10000000–19999999)	Washer, Lock, Int–Ext, 0.25	1
29	24265	(10000000–19999999)	Screw, Pan, Phl, M4 X 0.70 X 16, Ss	1

Fig. 23 – Electrical Contactor and Wires Group

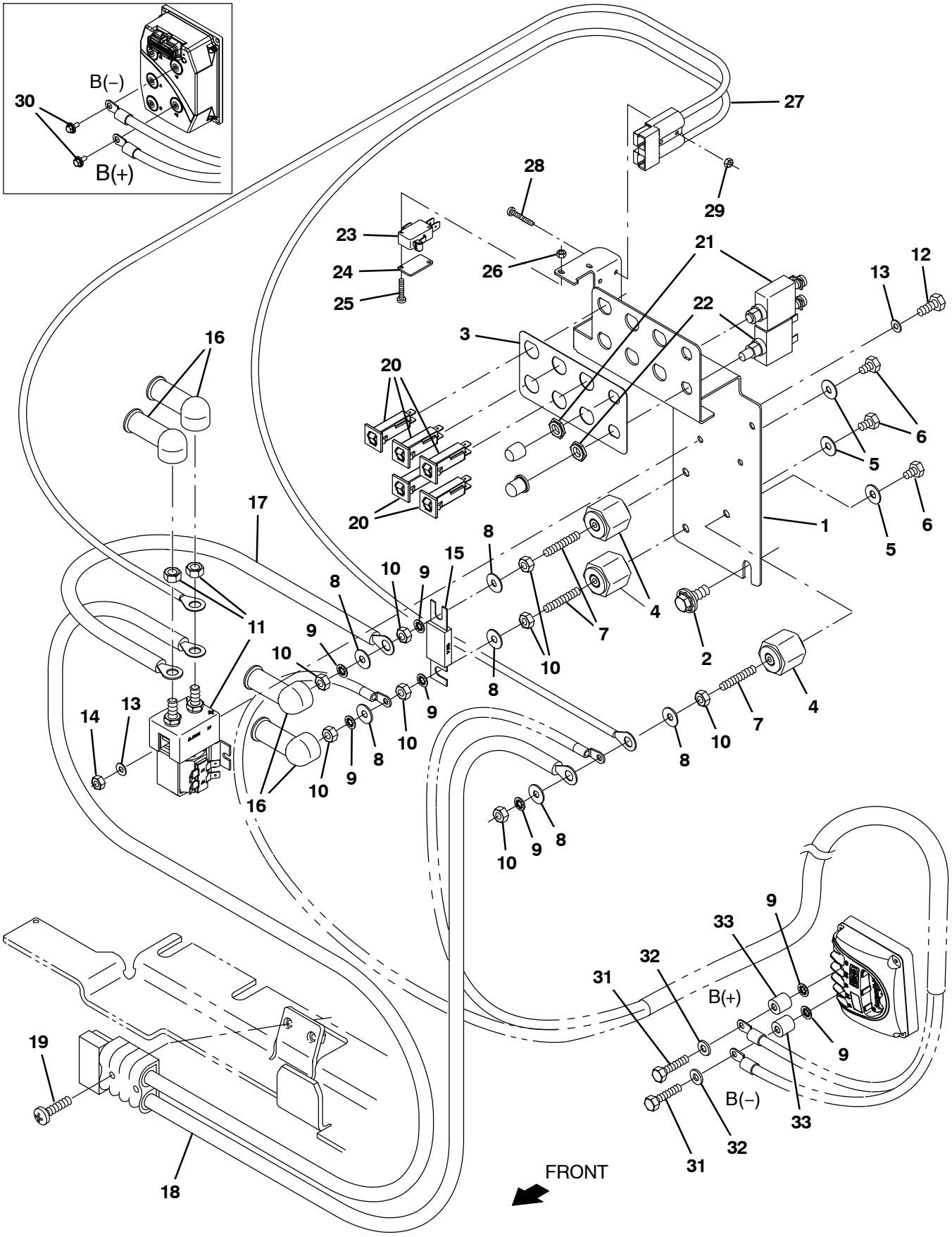

356328

Fig. 23 – Electrical Contactor and Wires Group

Ref.	Part No.	Serial Number	Description	Qty.
1	1246191	(10000000–19999999)	Plate, Electrical	1
2	1020341	(10000000–19999999)	Screw, Hex, M8 X 1.25 X 20, Ss, Sems	2
3	1200913	(10000000–19999999)	Label, Circuitbreaker	1
4	76062	(10000000–19999999)	Stand–Off, Wir, 0.25, Insulator, Panel	3
5	01684	(10000000–19999999)	Washer, Flat, 0.27b 0.69d .05, Ss	3
6	58670	(10000000–19999999)	Screw, Hex, .25–20 X 0.50, Nl	3
7	41702	(10000000–19999999)	Rod, Thrd, Full, .25–20 01.5l	3
8	32490	(10000000–19999999)	Washer, Flat, 0.25, Std	6
9	32982	(10000000–19999999)	Washer, Lock, Int, 0.25	7
10	01690	(10000000–19999999)	Nut, Hex, Std, .25–20	8
11	397609	(10000000–19999999)	Contactor, 36vdc, No	1
12	09738	(10000000–19999999)	Screw, Hex, M5 X 0.80 X 12, Ss	2
13	140011	(10000000–19999999)	Washer, Flat, 0.21b 0.45d .03, Ss	4
14	09739	(10000000–19999999)	Nut, Hex, Lock, M5 X 0.80, Nl, Ss	2
15	87318	(10000000–19999999)	Fuse, 080a, 0.88 2.4l, 125volt,Slow–Blow	1
16	1016314	(10000000–19999999)	Boot, 90deg .50id 1.00id 2.50l, Red	4
17	1069894	(10000000–19999999)	Cable, 06ga 5.5l Brown .25ring /.312ring	1
18	1069897	(10000000–19999999)	Cable, Battery, 4ga, .25ring / .312ring	1
19	33944	(10000000–19999999)	Screw, Pan, Phl, M6 X 1.00 X 35, 4.8	2
20	1064184	(10000000–19999999)	Circuitbreaker, 02.5a, Resetable	5
21	383724	(10000000–19999999)	Circuitbreaker, 25.0a, Resetable	1
22	1206757	(10000000–19999999)	Circuitbreaker, 60.0a, resetable	1
23	600437	(10000000–19999999)	Switch, Snap, 15a, Rlr	1
24	601359	(10000000–19999999)	Plate, Backing, Switch	1
25	06922	(10000000–19999999)	Screw, Pan, Phl, M3 X 0.50 X 20, 4.8	2
26	01754	(10000000–19999999)	Nut, Hex, Std, M3 X 0	2
27	1059169	(10000000–19999999)	Cable Assy, 10ga .25ring /.31ring, 050a	1
28	25005	(10000000–19999999)	Screw, Pan, Phl, 06–32 X 1.00, G1	2
29	75939	(10000000–19999999)	Nut, Hex, Lock, #06–32, Nl	2
30	1034731	(10000000–10863997)	Screw, Hex, M6 X 1.00 X 16, Ss, Sems	2
31	06946	(10863998–19999999)	Screw, Hex, M6 X 1.00 X 35, 8.8	2
32	32483	(10863998–19999999)	Washer, Flat, 0.25, Sae	2
33	1206722	(10863998–19999999)	Sleeve, P/M, 0.25B 0.38D 0.8L	2

Fig. 24 – Battery Group, 240Ah

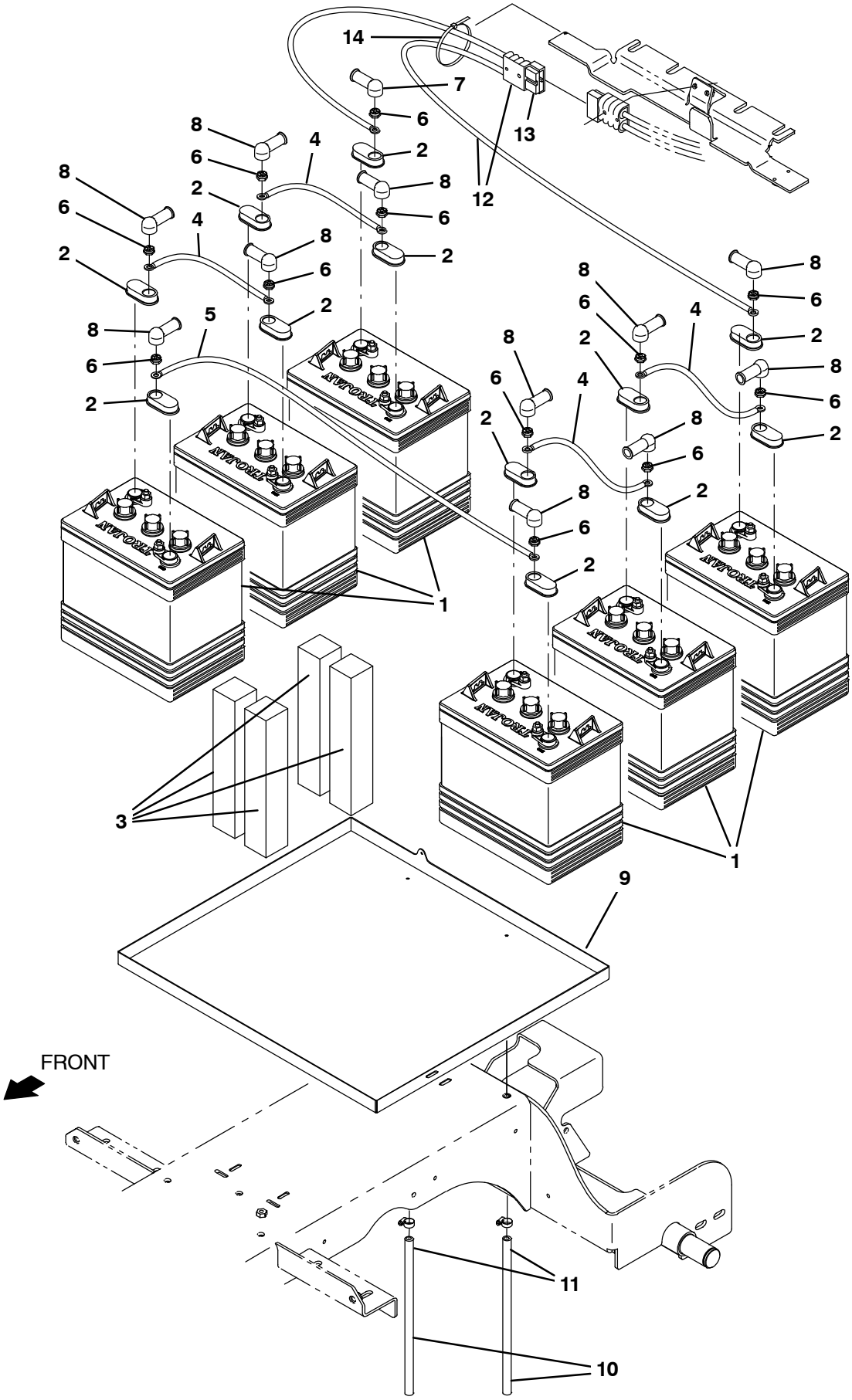

356329

Fig. 24 – Battery Group, 240Ah

	Ref.	Part No.	Serial Number	Description	Qty.
	1	222280	(10000000–19999999)	Battery, Wet, 06vdc 0240ah	6
	2	1041030	(10000000–19999999)	Cap, Battery	12
	3	83415	(10000000–19999999)	Spacer, Battery, Foam, 2.00 X 2.0 X 11.0	4
	4	223355	(10000000–19999999)	Cable, 04ga 08.0l Blk .34ring /.34ring	4
	5	223356	(10000000–19999999)	Cable, 04ga 12.0l Blk .34ring /.34ring	1
	6	87435	(10000000–19999999)	Nut, Hex, Flexlock, .31–18	12
	7	1016314	(10000000–19999999)	Boot, 90deg .50id 1.00id 2.50l, Red	1
	8	611221	(10000000–19999999)	Boot, Terminal, Battery, 25.4mm, Blk	11
	9	1201303	(10000000–19999999)	Tray Wldt, Battery	1
	10	1006401	(10000000–19999999)	Hose, Afmkt, Pvc, Brd, 0.50id, 03ft, Clr	1
	11	54333	(10000000–19999999)	Clamp, Hose, Wormdrive, 0.31–0.88d, .31w	2
▽	12	223361	(10000000–19999999)	Cable Assy, 04ga .34ring /.34ring, 175a	1
▲	13	22892	(10000000–19999999)	Connector, Anderson, 175a, Gray	1
	14	130773	(10000000–19999999)	Tie, Cable, Nyl, 11.0l, .14w, 3.0 Max. D	1

Fig. 25 – Wire Harnesses Group

356359

Ref.	Part No.	Serial Number	Description	Qty.
1	1069346	(10000000–10863997)	Harness, Main, Ele [T12]	1
2	1074780	(10863998–19999999)	Harness, Main, Ele [T12]	1
3	1069745	(10000000–19999999)	Harness. Ele, Seat [T12]	1
4	1069730	(10000000–19999999)	Harness, Wire, Propel Motor [T12]	1
5	1070956	(10000000–10863997)	Harness, Cable, Propel Motor [T12]	1
6	1074787	(10863998–11083475)	Harness, Cable, Propel Motor [T12]	1
6	1077190	(11083476–19999999)	Harness, Cable, Propel Motor [Cw]	1
7	1069891	(10000000–10863997)	Cable Assy, power [T12]	1
8	1074788	(10863998–19999999)	Cable Assy, power [T12]	1

Fig. 26 – Labels Group

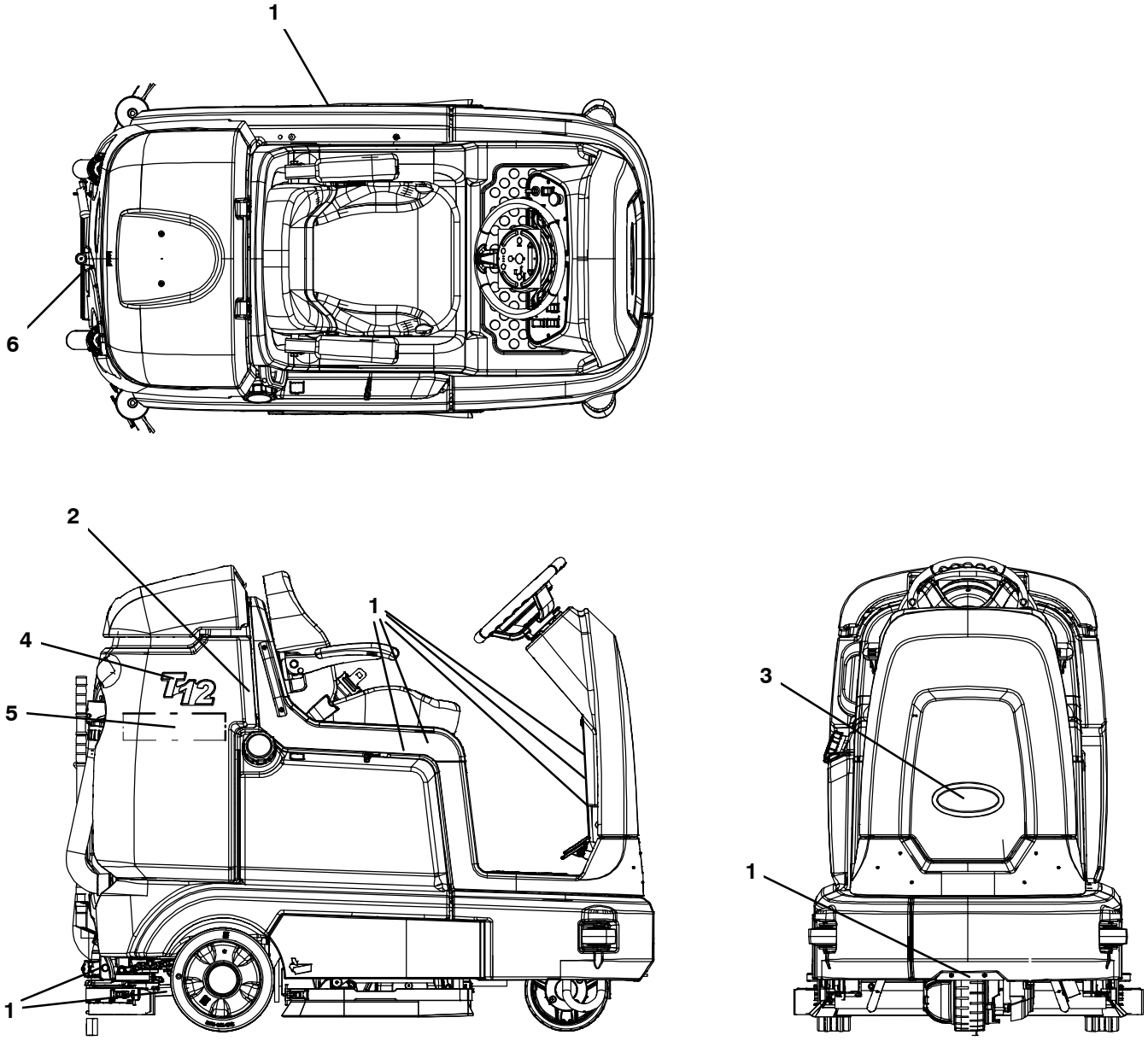

Ref.	Part No.	Serial Number	Description	Qty.
1	1205741	(10000000–19999999)	Label Set, Info/Hzrd [T12]	1
1	1205743	(10000000–19999999)	Label Set, Info/Hzrd, Tj [T12] (Japan Only)	1
2	1205724	(10000000–19999999)	Label, Hzrd, Flammable Matl, Na	1
2	1067120	(10000000–19999999)	Label, Hzrd, Flammable Matl, Tj (Japan Only)	1
3	1204077	(10000000–19999999)	Nameplate, Tennant, Domed 7.0in	1
4	1205426	(10000000–19999999)	Label, Logo [T12]	2
4	1205432	(10000000–19999999)	Label, Logo [T12XP]	2
5	1062813	(10000000–19999999)	Label, Logo, 12.3l 4color [Ec–H2o]	2
6	1056578	(10000000–19999999)	Label, Logo, 05.8L Shite / Tl [Tennant]	2

SECTION 3

Contents **Page**

Fig. 1 – Headlight Group 3-2
Fig. 2 – Strobe Light and Backup Alarm Kit 3-4
Fig. 3 – Strobe Light Kit, Overhead Guard 3-6
Fig. 4 – Spotlight Kit, Blue 3-8
Fig. 5 – Squeegee Guard Group 3-10
Fig. 6 – Heavy Duty Bumper Kit 3-12
Fig. 7 – Overhead Guard Kit 3-14
Fig. 8 – ec–H20 Solution Pump Group 3-16
Fig. 9 – ec–H20 Solution Supply Group, Side Brush 3-18
Fig. 10 – ec–H20 Wire Harness Group 3-20
Fig. 11 – Side Brush Motor and Squeegee Group 3-22
Fig. 12 – Side Brush Pivot Group 3-24
Fig. 13 – Side Brush Bumper and Mount Group 3-26
Fig. 14 – Side Brush Solution Supply Group 3-28
Fig. 15 – Side Brush Electrical Group 3-30
Fig. 16 – Side Brush Wire Harness Group 3-32
Fig. 17 – Spray Hose Kit 3-34
Fig. 18 – Vacuum Wand Kit 3-36
Fig. 19 – Telemetry Group (S/N 10000000–10967790) 3-38
Fig. 20 – Telemetry Group (S/N 10967791–19999999) 3-40
Fig. 21 – Battery Group, 36V 360Ah 3-42
Fig. 22 – Battery Group, 36V 350Ah 3-44
Fig. 23 – Battery Group, Lithium–Ion, 36V, 2 Battery Kit 3-46
Fig. 24 – Battery Expansion Kit, Lithium–Ion, 36V 3-48
Fig. 25 – Battery Charger Group 3-50
Fig. 26 – Battery Charger Group 3-51
Fig. 27 – Battery Charger Group, International Only 3-52
Fig. 28 – Battery Charger Group 3-53
Fig. 29 – Battery Chargers Group, Lithium–Ion . 3-54
Fig. 30 – On–Board Charger Kit 3-56
Fig. 31 – On–Board Charger Group, International 3-58
Fig. 32 – Flow–Ritet Battery Water Manifold Kit 3-60
Fig. 33 – HydrolinkR Battery Watering System Kit 3-61
Fig. 34 – Manual Battery Watering System Kit . . 3-62
Fig. 35 – Transport Group 3-63
Fig. 36 – Fire Extinguisher Group 3-64
Fig. 37 – Documentation Group (Available Online Only) 3-65

Fig. 1 – Headlight Group

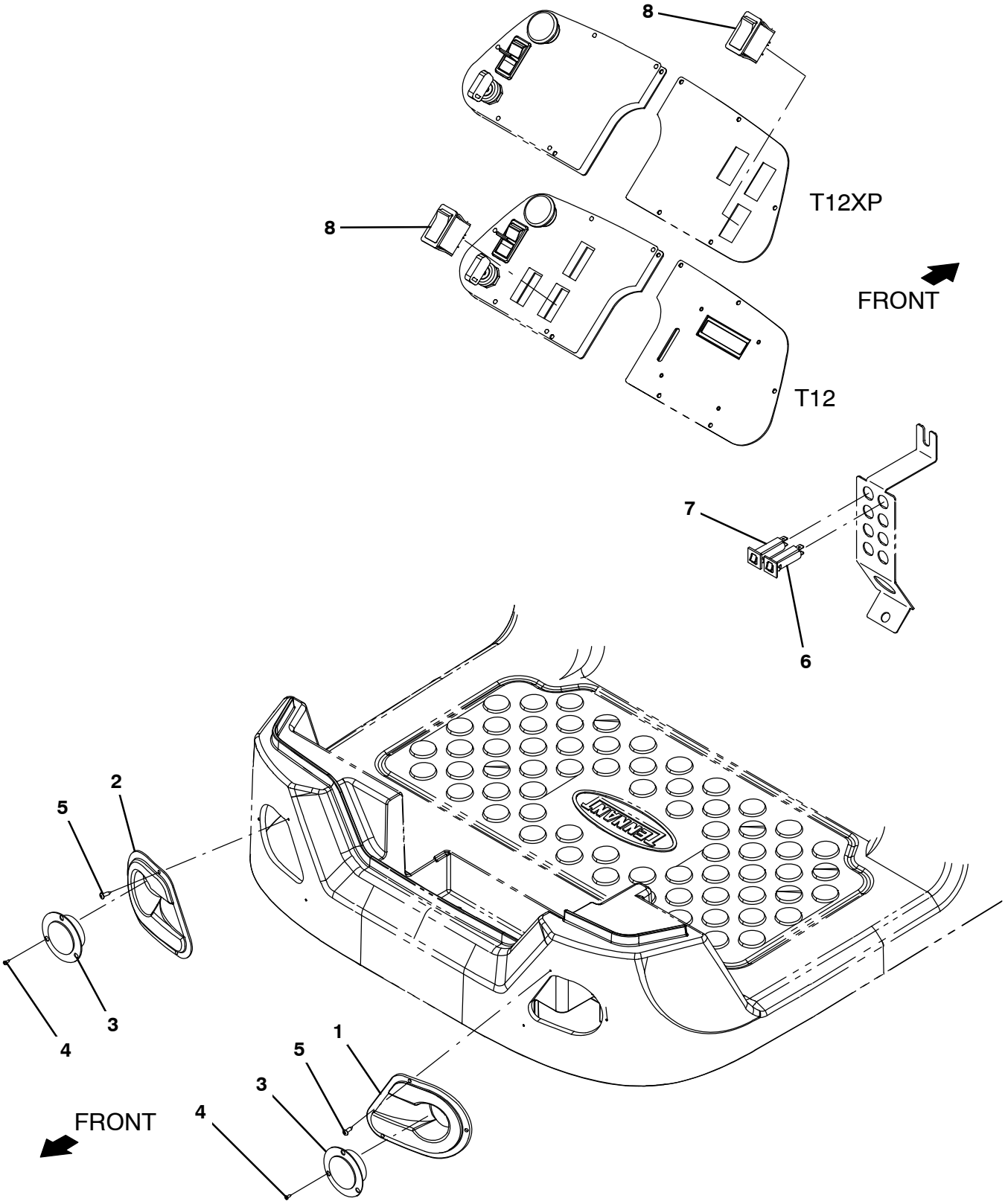

356330

Fig. 1 – Headlight Group

Ref.	Part No.	Serial Number	Description	Qty.
1	1202870	(10000000–19999999)	Bezel, Headlight, Lh [W/Inserts]	1
2	1202892	(10000000–19999999)	Bezel, Headlight, Rh [W/Inserts]	1
3	9008182	(10000000–19999999)	Light Assy, Pre–Sweep, Afmkt	2
4	06920	(10000000–19999999)	Screw, Pan, Phl, M3 X 0.50 X 10, 4.8	6
5	140825	(10000000–19999999)	Screw, Pan, Phl, 06 X 0.50, Fmg/Ab, Blk	6
6	1064184	(10000000–19999999)	Circuitbreaker, 02.5a, Resetable	1
7	1064188	(10000000–19999999)	Circuitbreaker, 15.0a, Resetable	1
8	377084	(10000000–19999999)	Switch, Rocker, Prgrsv	1

Fig. 2 – Strobe Light and Backup Alarm Kit

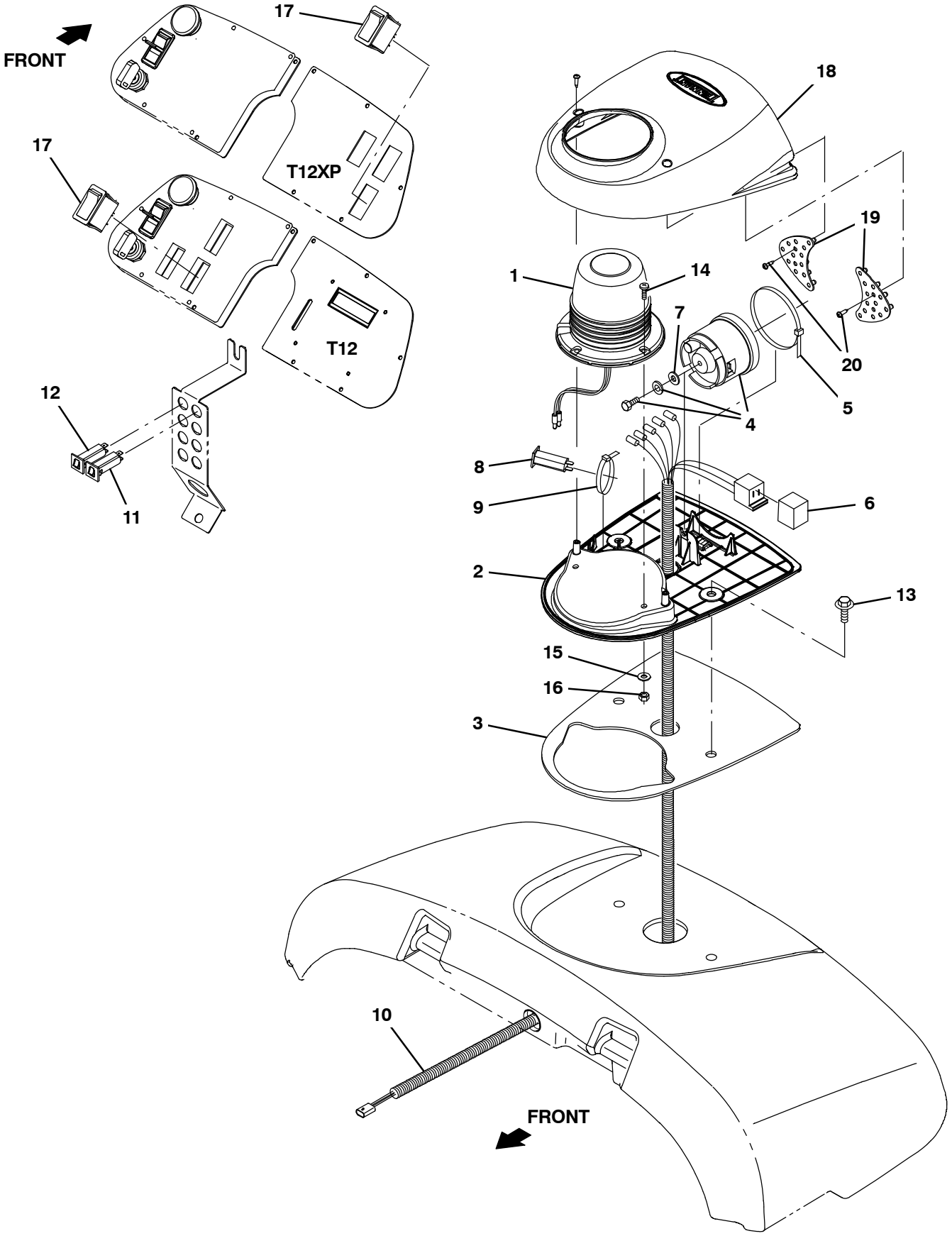

356337

Fig. 2 – Strobe Light and Backup Alarm Kit

	Ref.	Part No.	Serial Number	Description	Qty.
▽		9010353	(10000000–19999999)	Light kit, Strobe, Module, Ci [T12]	1
▲	1	1075296	(10000000–19999999)	Light, Flsh, 12Vdc, Amb, Rwk	1
▲	2	1059938	(10000000–19999999)	Base, Module, Light	1
▲	3	1063263	(10000000–19999999)	Gasket, Base, Module	1
▲	4	1058694	(10000000–19999999)	Alarm, Backup, 12–48vdc, Adj	1
▲	5	49263	(10000000–19999999)	Tie, Cable, Nyl, 11.4l .19w 3.0 Max D	1
▲	6	398526	(10000000–19999999)	Relay, 36Vdc, 005A, Spdt No [Greenwich]	1
▲	7	32483	(10000000–19999999)	Washer, Flat, 0.25, Sae	1
▲	8	1064184	(10000000–19999999)	Circuitbreaker, 02.5a, Resetable	1
▲	9	49266	(10000000–19999999)	Tie, Cable, Nyl, 07.3l .19w 1.8 Max D	1
▲	10	1056979	(10000000–19999999)	Harness, Wire, Alarm / Light [T16]	1
▲	11	1064184	(10000000–19999999)	Circuitbreaker, 02.5a, Resetable	1
▲	12	1064188	(10000000–19999999)	Circuitbreaker, 15.0a, Resetable	1
▲	13	1020341	(10000000–19999999)	Screw, Hex, M8 X 1.25 X 20, Ss, Sems	2
▲	14	06933	(10000000–19999999)	Screw, Pan, Phl, M5 X 0.80 X 16, 4.8	2
▲	15	19066	(10000000–19999999)	Washer, Flat, 0.25b 0.56d .05, Pl, 10	2
▲	16	06549	(10000000–19999999)	Nut, Hex, Lock, M5 X 0.80, Nl	2
▲	17	377084	(10000000–19999999)	Switch, Rocker, Prgrsv	1
▲	18	1062106	(10000000–19999999)	Cover, Module, Light	1
▲	19	1059342	(10000000–19999999)	Light Assy, Led	1
▲	20	140825	(10000000–19999999)	Screw, Pan, Phl, 06 X 0.50, Fmg/Ab, Blk	6

Fig. 3 – Strobe Light Kit, Overhead Guard

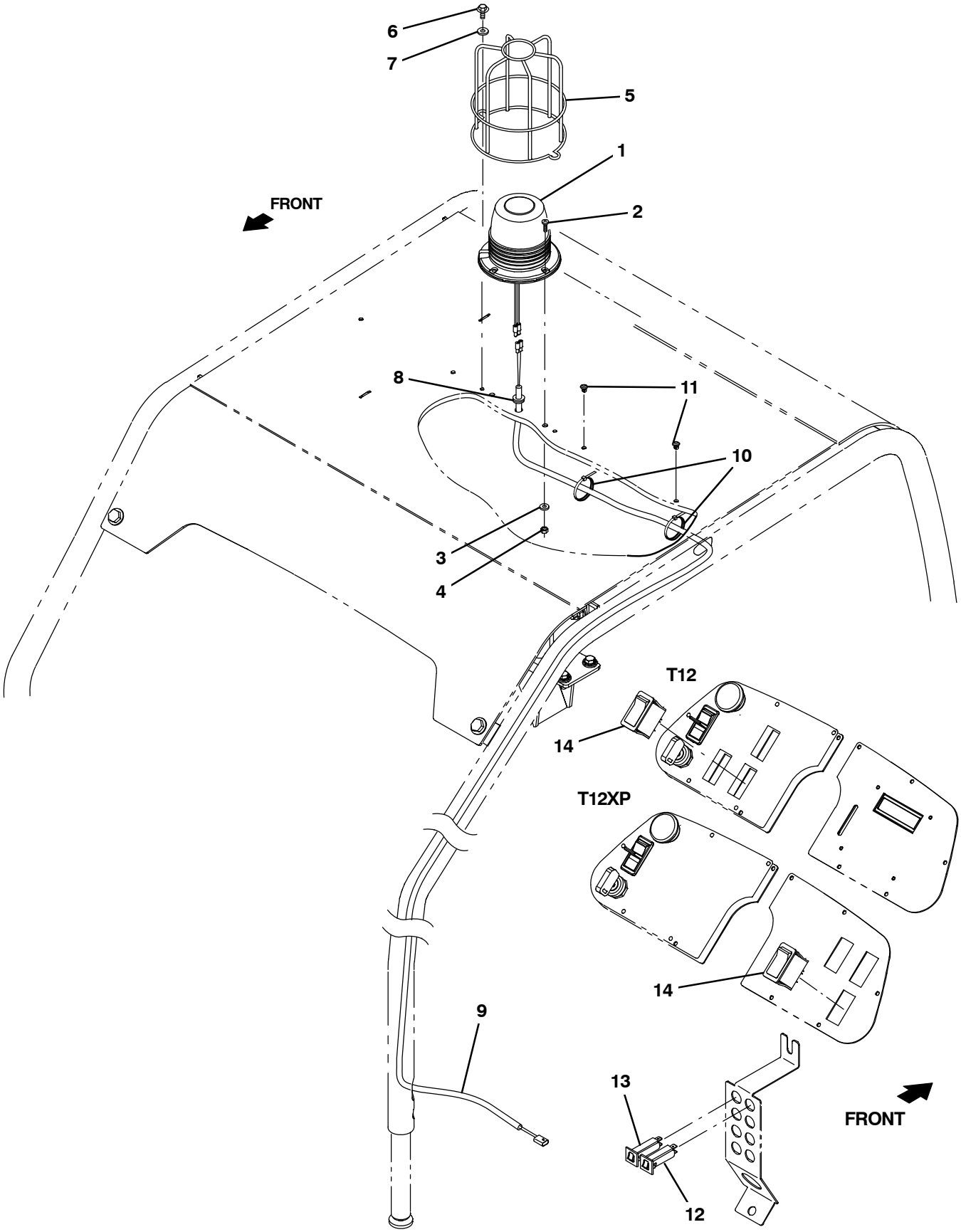

356341

Fig. 3 – Strobe Light Kit, Overhead Guard

	Ref.	Part No.	Serial Number	Description	Qty.
▽		9010351	(10000000–19999999)	Light Kit, Warning, Ohg, Ci [T12]	1
▲	1	1075296	(10000000–19999999)	Light, Flsh, 12Vdc, Amb, Rwk	1
▲	2	06933	(10000000–19999999)	Screw, Pan, Phl, M5 X 0.80 X 16, 4.8	2
▲	3	19066	(10000000–19999999)	Washer, Flat, 0.25b 0.56d .05, Pl, 10	2
▲	4	06549	(10000000–19999999)	Nut, Hex, Lock, M5 X 0.80, Nl	2
▲	5	1039392	(10000000–19999999)	Guard, Light, Revl / Strobe	1
▲	6	74455	(10000000–19999999)	Screw, Hex, M6 X 1.00 X 12, Fmg	2
▲	7	32490	(10000000–19999999)	Washer, Flat, 0.25, Std	2
▲	8	10632–2	(10000000–19999999)	Grommet, Rbr, 0.62id, F/0.9h, .12 Matl	1
▲	9	1069746	(10000000–19999999)	Harness, Ele, Ohg [T12]	1
▲	10	130773	(10000000–19999999)	Tie, Cable, Nyl, 11.0l, .14w, 3.0 Max. D	2
▲	11	1202868	(10000000–19999999)	Clip, Tie, 0.25d, Plstc	2
▲	12	1064184	(10000000–19999999)	Circuitbreaker, 02.5a, Resetable	1
▲	13	1064188	(10000000–19999999)	Circuitbreaker, 15.0a, Resetable	1
▲	14	377084	(10000000–19999999)	Switch, Rocker, Prgrsv	1

Fig. 4 – Spotlight Kit, Blue

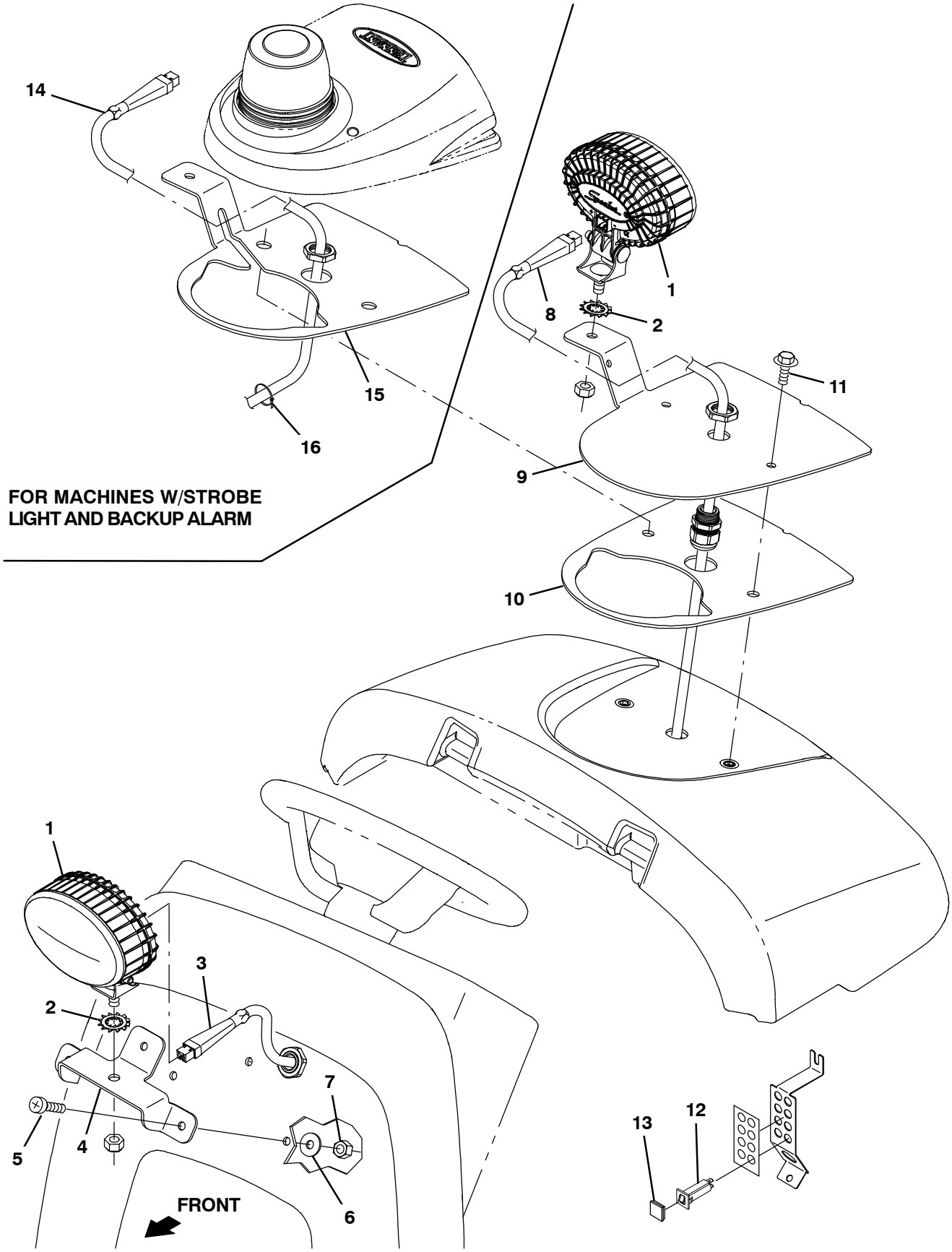

357175

Fig. 4 – Spotlight Kit, Blue

	Ref.	Part No.	Serial Number	Description	Qty.
▽		9020972	(10000000–19999999)	Spotlight Kit, Blue, Ci [T12/T16]	1
▲	1	1240687	(10000000–19999999)	Light, Spot, Blue, Led	2
▲	2	41143	(10000000–19999999)	Washer, Lock, Int–Ext, 0.50	2
▲	3	1254712	(10000000–19999999)	Harness, Blu Spotlight, Front	1
▲	4	1076808	(10000000–19999999)	Brkt, Blu Spotlight, Fr, Cover Mtg	1
▲	5	1031665	(10000000–19999999)	Screw, Pan, M8 X 1.25 X 25, Blk	3
▲	6	39890	(10000000–19999999)	Washer, Flat, M8, Fendr	3
▲	7	08713	(10000000–19999999)	Nut, Hex, Lock, M8 X 1.25, Nl, Ss	3
▲▽	8	1257237	(10000000–19999999)	Harness, Blu Spotlight, Rear	1
▲▲		1016029	(10000000–19999999)	Fuse, Blade, 005a, 32vdc [Atof]	1
▲	9	1077103	(10000000–19999999)	Brkt, Blu Spotlight, Rr, Cover Mtg	1
▲	10	1063263	(10000000–19999999)	Gasket, Base, Module	1
▲	11	1020341	(10000000–19999999)	Screw, Hex, M8 X 1.25 X 20, Ss, Sems	2
▲	12	1064184	(10000000–19999999)	Circuitbreaker, 02.5a, Resetable	1
▲	13	1064191	(10000000–19999999)	Boot, Circuitbreaker	1
▲▽	14	1256917	(10000000–19999999)	Harness, Blu Spotlight, Rear	1
▲▲		1016029	(10000000–19999999)	Fuse, Blade, 005a, 32vdc [Atof]	1
▲	15	1076810	(10000000–19999999)	Brkt, Blu Spotlight, Rr, Cover Mtg	1
▲	16	763114	(10000000–19999999)	Tie, Cable, 11.43l, 2.75d Max	10

Fig. 5 – Squeegee Guard Group

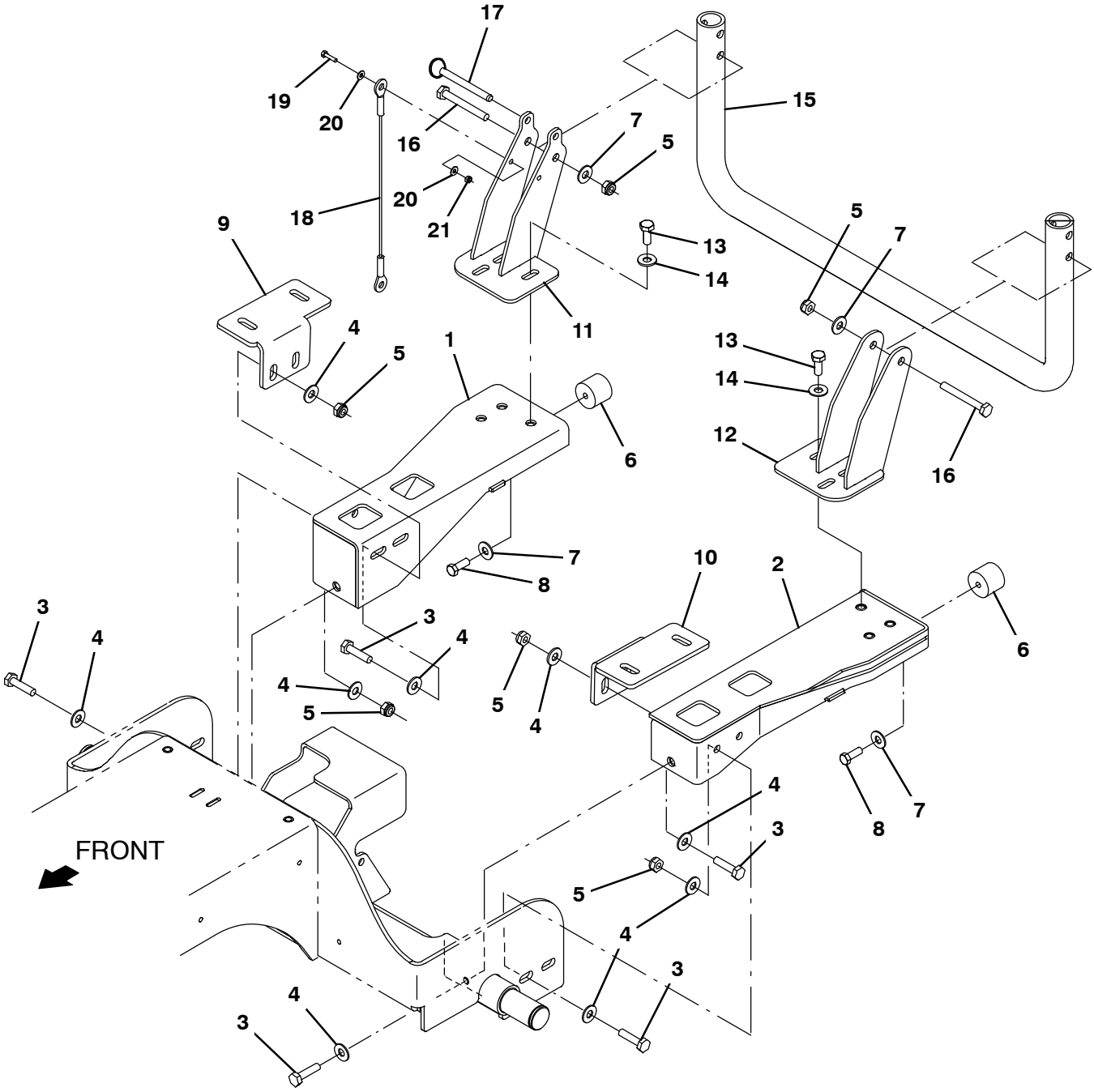

356338

Fig. 5 – Squeegee Guard Group

Ref.	Part No.	Serial Number	Description	Qty.
1	1201496	(10000000–19999999)	Channel Wldt, Bumper, Rh	1
2	1201503	(10000000–19999999)	Channel Wldt, Bumper, Lh	1
3	12317	(10000000–19999999)	Screw, Hex, M10 X 1.50 X 30, Ss	10
4	01686	(10000000–19999999)	Washer, Flat, 0.44b 1.00d .08, Ss	18
5	08714	(10000000–19999999)	Nut, Hex, Lock, M10 X 1.5, Nl, Ss	8
6	1024977	(10000000–19999999)	Bumper, Ure, 1.50d 1.25l	2
7	32492	(10000000–19999999)	Washer, Flat, 0.38, Std	4
8	69225	(10000000–19999999)	Screw, Hex, .38–16 X 1.00, Ss	2
9	1201499	(10000000–19999999)	Bracket, Support, Tank, Rh	1
10	1201504	(10000000–19999999)	Bracket, Support, Tank, Lh	1
11	1202246	(10000000–19999999)	Support Wldt, Guard, Rh	1
12	1202247	(10000000–19999999)	Support Wldt, Guard, Lh	1
13	09028	(10000000–19999999)	Screw, Hex, M10 X 1.50 X 25, Ss	6
14	01685	(10000000–19999999)	Washer, Flat, 0.38b 0.88d .08, Ss	6
15	1204847	(10000000–19999999)	Tube, Guard, Pntd	1
16	06965	(10000000–19999999)	Screw, Hex, M10 X 1.50 X 80, 8.8	2
17	369359	(10000000–19999999)	Pin, Hitch, .375d X 3.12l, Pl	1
18	19676	(10000000–19999999)	Cable, Glv .09d 013.0l .38eye /.38eye	1
19	09252	(10000000–19999999)	Screw, Hex, M5 X 0.80 X 20, 8.8	1
20	01683	(10000000–19999999)	Washer, Flat, 10, Ss	2
21	09739	(10000000–19999999)	Nut, Hex, Lock, M5 X 0.80, Nl, Ss	1

Fig. 6 – Heavy Duty Bumper Kit

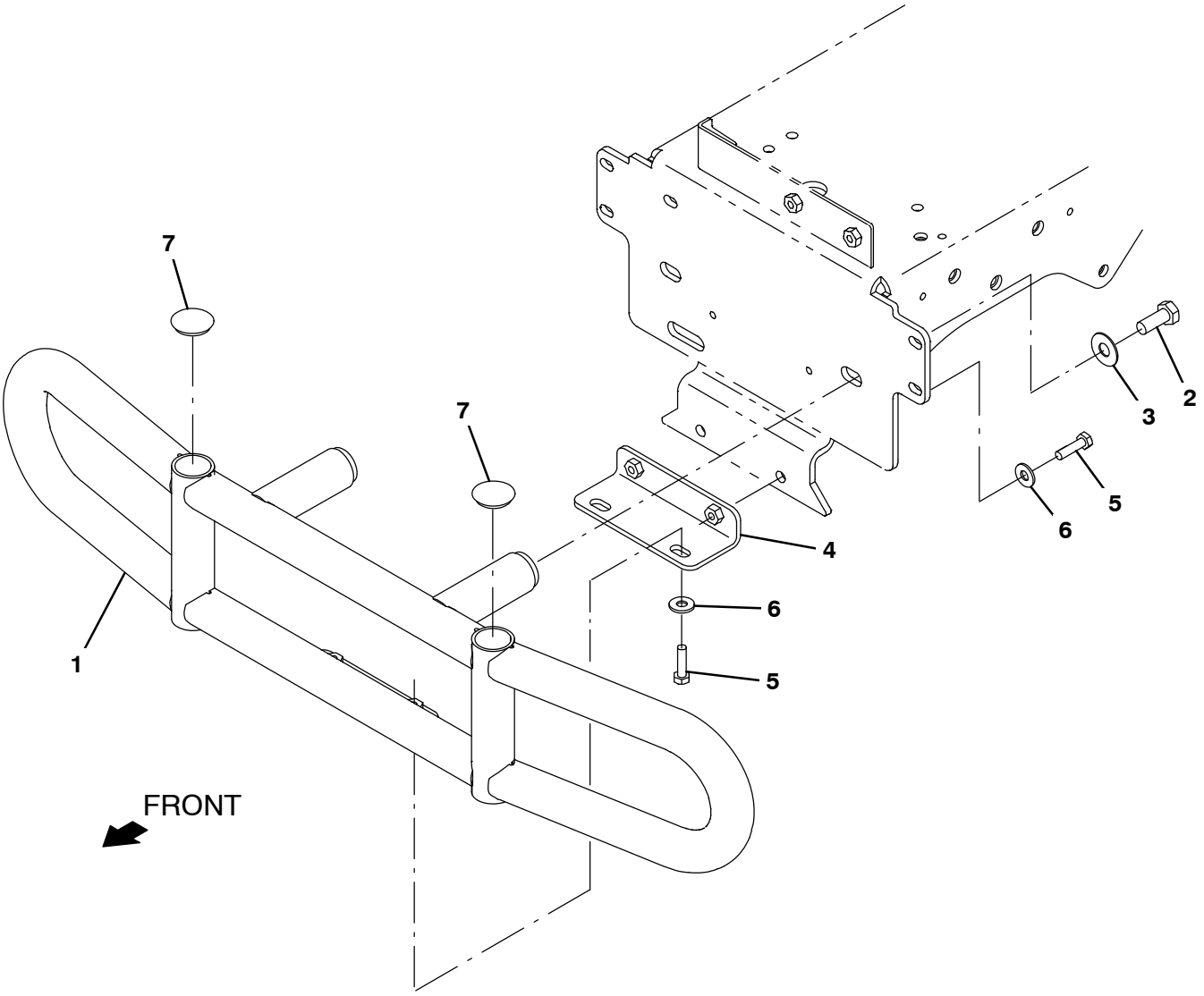

356339

Fig. 6 – Heavy Duty Bumper Kit

NOTE: Overhead Guard Kit (including Heavy Duty Bumper), Tennant Part Number 9009861, includes; Fig. 6 and Fig. 7.

	Ref.	Part No.	Serial Number	Description	Qty.
▽		9009857	(10000000–19999999)	Bumper Kit, Front, Hd, Ci [T12]	1
▲	1	1201452	(10000000–19999999)	Tube Wldt, Bmpr	1
▲	2	12309	(10000000–19999999)	Screw, Hex, M12 X 1.75 X 30, Ss	2
▲	3	140045	(10000000–19999999)	Washer, Flat, 0.51b 1.25d .06, Ss	2
▲	4	1201061	(10000000–19999999)	Bracket Wldt, Bumper	1
▲	5	09011	(10000000–19999999)	Screw, Hex, M8 X 1.25 X 30, Ss	4
▲	6	01685	(10000000–19999999)	Washer, Flat, 0.38b 0.88d .08, Ss	4
▲	7	1010399	(10000000–19999999)	Plug, Hole, Rnd, 1.25h .18, Blk Stl	2

Fig. 7 – Overhead Guard Kit

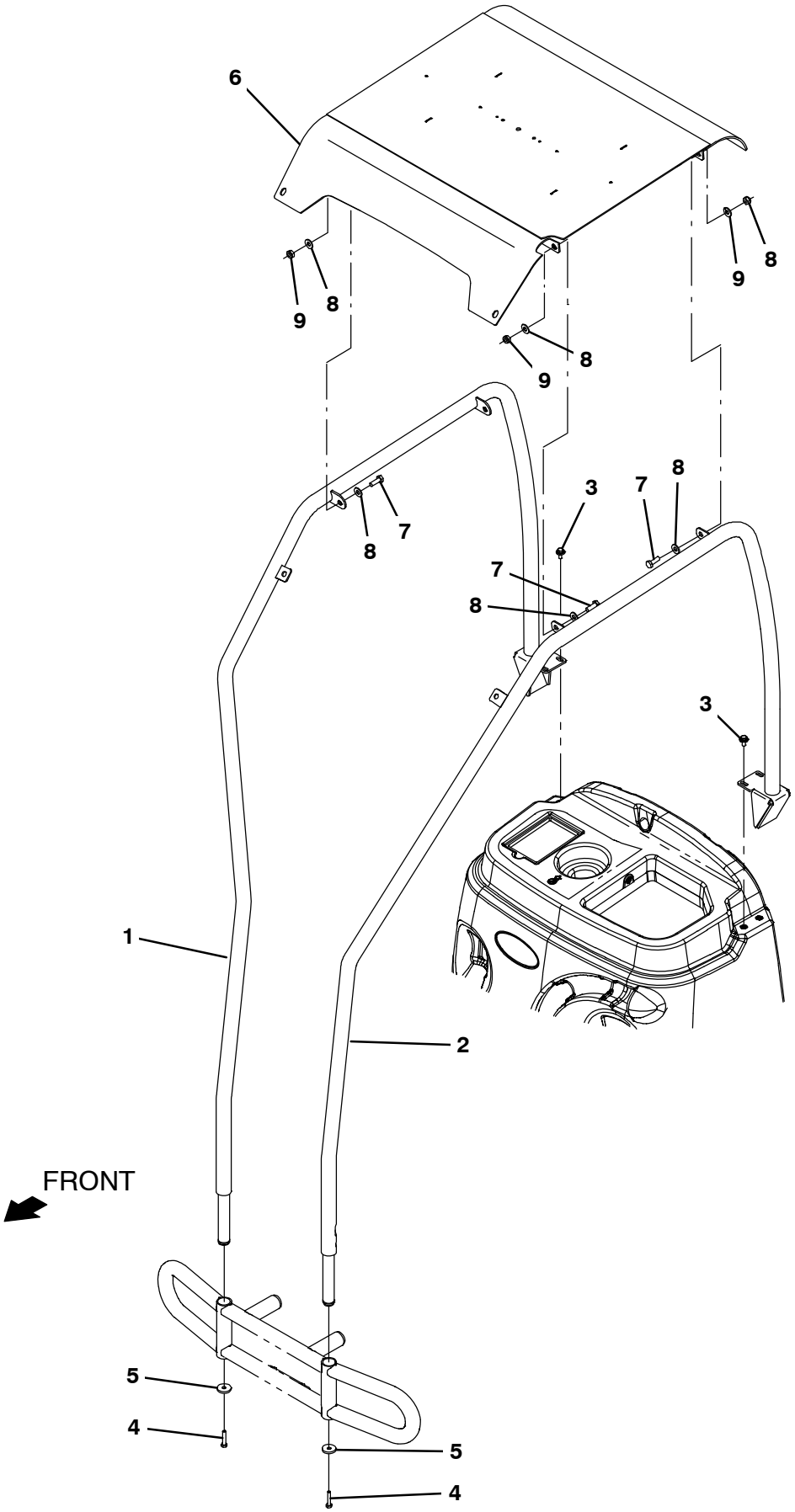

356340

Fig. 7 – Overhead Guard Kit

NOTE: Overhead Guard Kit (including Heavy Duty Bumper), Tennant Part Number 9009861, includes; Fig. 6 and Fig. 7.

	Ref.	Part No.	Serial Number	Description	Qty.
▽		9009848	(10000000–19999999)	Ohg Kit W/O Bumper, Ci [T12]	1
▲	1	1201550	(10000000–19999999)	Tube Wldt, Guard, Rh	1
▲	2	1201357	(10000000–19999999)	Tube Wldt, Guard, Lh	1
▲	3	1020341	(10000000–19999999)	Screw, Hex, M8 X 1.25 X 20, Ss, Sems	4
▲	4	09023	(10000000–19999999)	Screw, Hex, M8 X 1.25 X 35, Fl, Ss	2
▲	5	46983	(10000000–19999999)	Washer, Flat, 0.39b 1.38d .19, Stl, Pl	2
▲	6	1201247	(10000000–19999999)	Guard Wldt, Top, Ohg	1
▲	7	03192	(10000000–19999999)	Screw, Hex, M10 X 1.50 X 30, 8.8	4
▲	8	32492	(10000000–19999999)	Washer, Flat, 0.38, Std	8
▲	9	41430	(10000000–19999999)	Nut, Hex, Lock, M10 X 1.5, Nl	4

Fig. 8 – ec–H20 Solution Pump Group

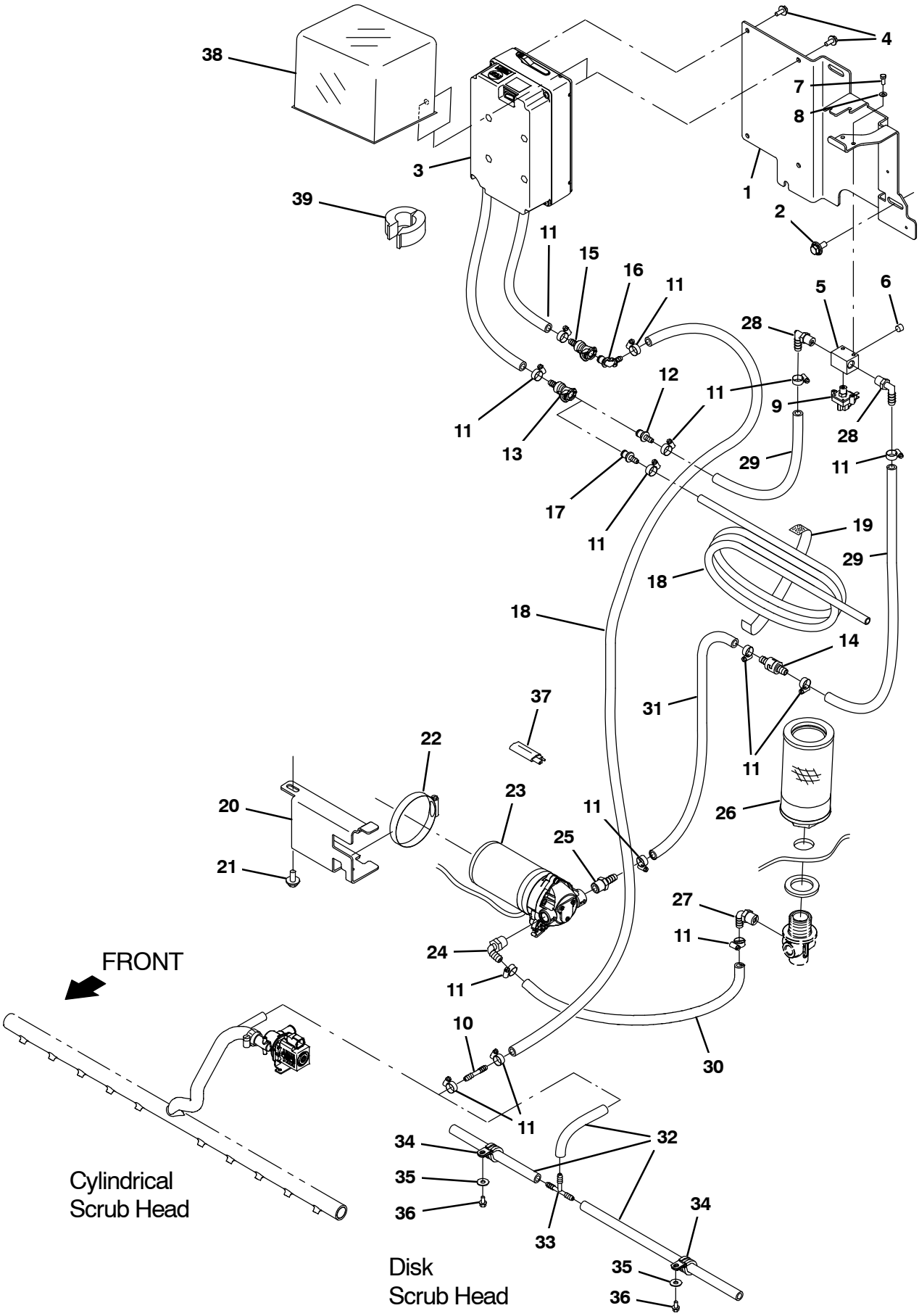

356348

Fig. 8 – ec–H20 Solution Pump Group

Ref.	Part No.	Serial Number	Description	Qty.
1	1247316	(10000000–19999999)	Bracket, Soltn [Ec–H2o]	1
2	1020341	(10000000–19999999)	Screw, Hex, M8 X 1.25 X 20, Ss, Sems	3
3	9010933	(10000000–19999999)	Ech20 Module, Afmkt [T12] (See Breakdowns)	1
4	1034731	(10000000–19999999)	Screw, Hex, M6 X 1.00 X 16, Ss, Sems	4
5	1059231	(10000000–19999999)	Fitting, Stl, Pm04/Pm02/Pm04/Pm02, Spcl	1
6	150208	(10000000–19999999)	Fitting, Brs, Str, Pm02, Plug [Skhd]	1
7	09738	(10000000–19999999)	Screw, Hex, M5 X 0.80 X 12, Ss	2
8	140011	(10000000–19999999)	Washer, Flat, 0.21b 0.45d .03, Ss	2
9	1044415	(10000000–19999999)	Switch, Press, 20psi, Pm02	1
10	1052705	(10000000–19999999)	Fitting, Plstc, Str, Bm04/Bm04	2
11	43844	(10000000–19999999)	Clamp, Hose, Wormdrive, 0.25–0.62d, .31w	14
12	1203814	(10000000–19999999)	Fitting, Plstc, Str, Bm06, Cplg, Male	1
13	1203454	(10000000–19999999)	Fitting, Plstc, Str, Bm06, Cplg, Fem	1
14	1015455	(10000000–19999999)	Valve, Check, 0005psi Bm06/Bm06	1
15	1203996	(10000000–19999999)	Fitting, Plstc, Str, Bm05, Cplg, Fem	1
16	1204024	(10000000–19999999)	Fitting, Plstc, E90, Bm04 Cplg Male	1
17	1204338	(10000000–19999999)	Fitting, Plstc, Str, Bm04, Cplg, Male	1
18	1206779	(10000000–19999999)	Hose, Afmkt, Pvc, Brd, 0.25Id, 08Ft	2
19	1059534	(10000000–19999999)	Fastener, 09.00l [Hook & Loop]	1
20	1201310	(10000000–19999999)	Bracket, Pump, Soltn	1
21	1020341	(10000000–19999999)	Screw, Hex, M8 X 1.25 X 20, Ss, Sems	1
22	43555	(10000000–19999999)	Clamp, Hose, Wormdrive, 2.62–3.50d	1
23	1200328	(10000000–19999999)	Pump, Soltn, Ele, 36vdc, 60psi	1
24	1005630	(10000000–19999999)	Fitting, Plstc, E90, Bm06/Pm06, Nyl	1
25	150538	(10000000–19999999)	Fitting, Plstc, Str, Bm06/Pm06	1
26	1201379	(10000000–19999999)	Filter, Soltn, 080 Mesh, Pm12 3.2d 6.0l	1
27	1005630	(10000000–19999999)	Fitting, Plstc, E90, Bm06/Pm06, Nyl	1
28	57248	(10000000–19999999)	Fitting, Plstc, E90, Bm06/Pm04, Nyl	2
29	1014971	(10000000–19999999)	Hose, Afmkt, Pvc, Brd, 0.38id, 01ft, Clr	2
30	1006400	(10000000–19999999)	Hose, Afmkt, Pvc, Brd, 0.38id, 03ft, Clr	1
31	1014974	(10000000–19999999)	Hose, Afmkt, Pvc, Brd, 0.38id, 02ft, Clr	1
32	1206778	(10000000–19999999)	Hose, Afmkt, Pvc, Brd, 0.25Id, 03Ft	1
33	150713	(10000000–19999999)	Fitting, Plstc, Tee, Bm04/Bm04/Bm04	1
34	1016354	(10000000–19999999)	Clamp, Cable, Ss, 0.50D X 0.50W [Insul]	2
35	01684	(10000000–19999999)	Washer, Flat, 0.27B 0.69D .05, Ss	2
36	223198	(10000000–19999999)	Screw, Hex, M5 X 0.80 X 10, Fmg	2
37	1040868	(10000000–19999999)	Capacitor, Plug [.01 Uf, 200V]	1
38	9011663	(10000000–19999999)	Silicone Cap, Afmkt [ec–H2O]	1
39	1249803	(10000000–19999999)	Ferrite Clam On Id=0.52	1

Fig. 9 – ec–H20 Solution Supply Group, Side Brush

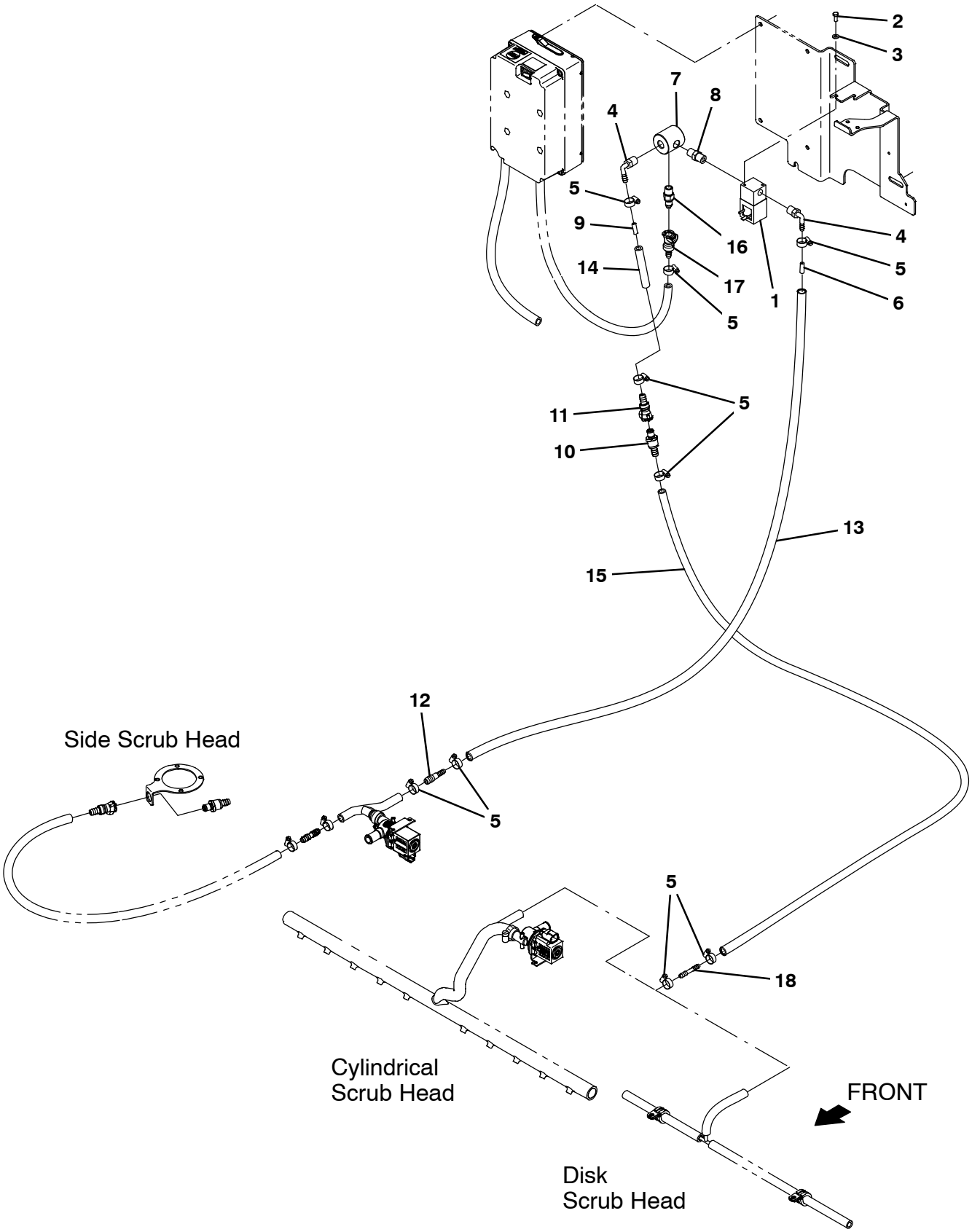

356349

Fig. 9 – ec–H20 Solution Supply Group, Side Brush

Ref.	Part No.	Serial Number	Description	Qty.
1	1028581	(10000000–19999999)	Valve, Water, Solenoid, 36vdc 6.0mm Pf04	1
2	09738	(10000000–19999999)	Screw, Hex, M5 X 0.80 X 12, Ss	2
3	140011	(10000000–19999999)	Washer, Flat, 0.21b 0.45d .03, Ss	2
4	1011170	(10000000–19999999)	Fitting, Plstc, E90, Bm04/Pm04, Nyl	2
5	43844	(10000000–19999999)	Clamp, Hose, Wormdrive, 0.25–0.62d, .31w	9
6	1200467	(10000000–19999999)	Fitting, Plstc, Rst	1
7	1200998	(10000000–19999999)	Fitting, Plstc, Pf04/Pf04/Pf04	1
8	1052010	(10000000–19999999)	Fitting, Plstc, Str, Pm04/Pm04	1
9	1201441	(10000000–19999999)	Fitting, Plstc, Rst, Main Head	1
10	1204338	(10000000–19999999)	Fitting, Plstc, Str, Bm04, Cplg, Male	1
11	1002898	(10000000–19999999)	Fitting, Plstc, Str, Bm04, Cplg,Fem[Tco]	1
12	1039557	(10000000–19999999)	Fitting, Plstc, Str, Bm04/Bm06	1
13	1014949	(10000000–19999999)	Hose, Afmkt, Pvc, Brd, 0.25Id, 08Ft	1
14	1206776	(10000000–19999999)	Hose, Afmkt, Pvc, Brd, 0.25Id, 01Ft	1
15	1206779	(10000000–19999999)	Hose, Afmkt, Pvc, Brd, 0.25Id, 08Ft	1
16	1002899	(10000000–19999999)	Fitting, Plstc, Str, Pm04, Cplg,Mal[Tco]	1
17	1203996	(10000000–19999999)	Fitting, Plstc, Str, Bm05, Cplg, Fem	1
18	1052705	(10000000–19999999)	Fitting, Plstc, Str, Bm04/Bm04	1

Fig. 10 – ec–H20 Wire Harness Group

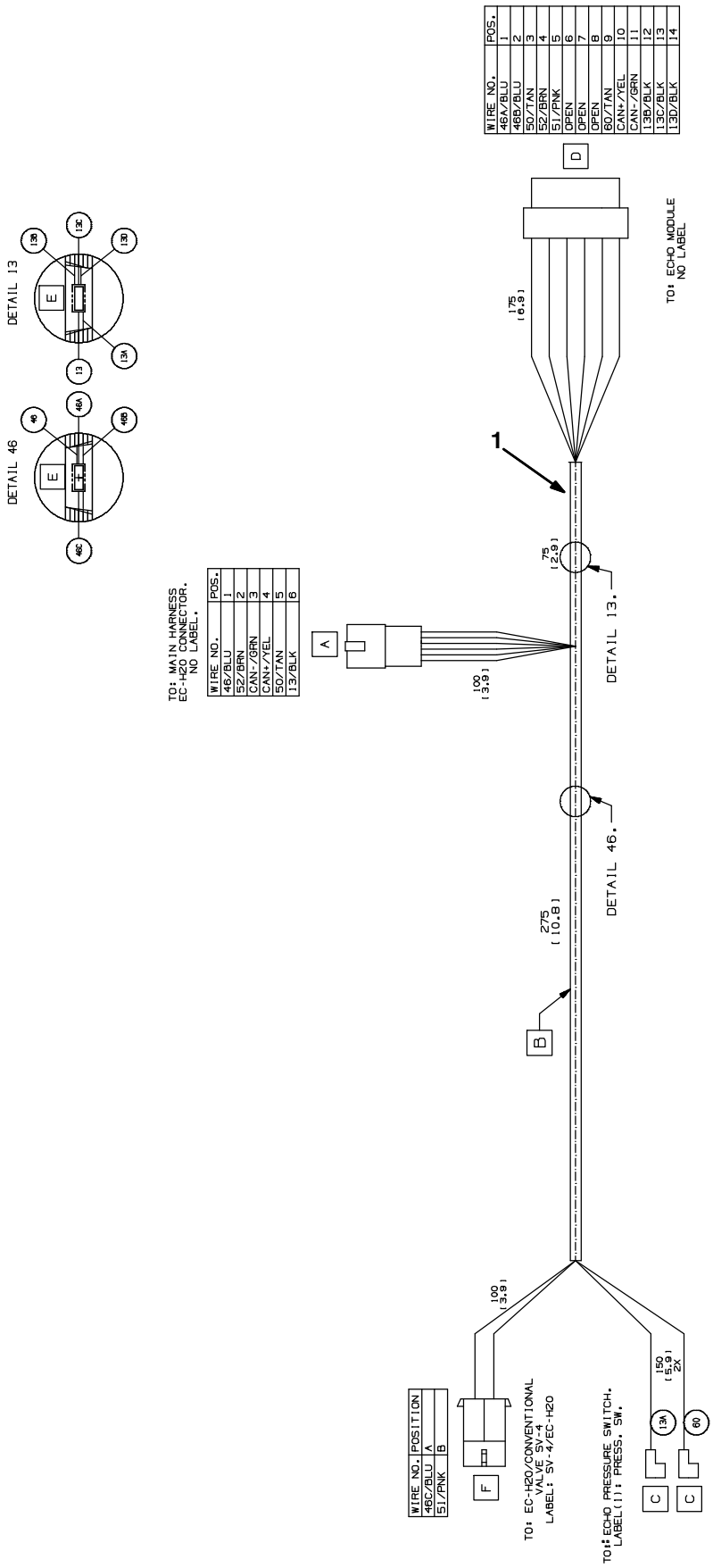

Fig. 10 – ec–H20 Wire Harness Group

Ref.	Part No.	Serial Number	Description	Qty.
1	1069671	(10000000–19999999)	Harness, Ele [Ec–H20, T12]	1

Fig. 11 – Side Brush Motor and Squeegee Group

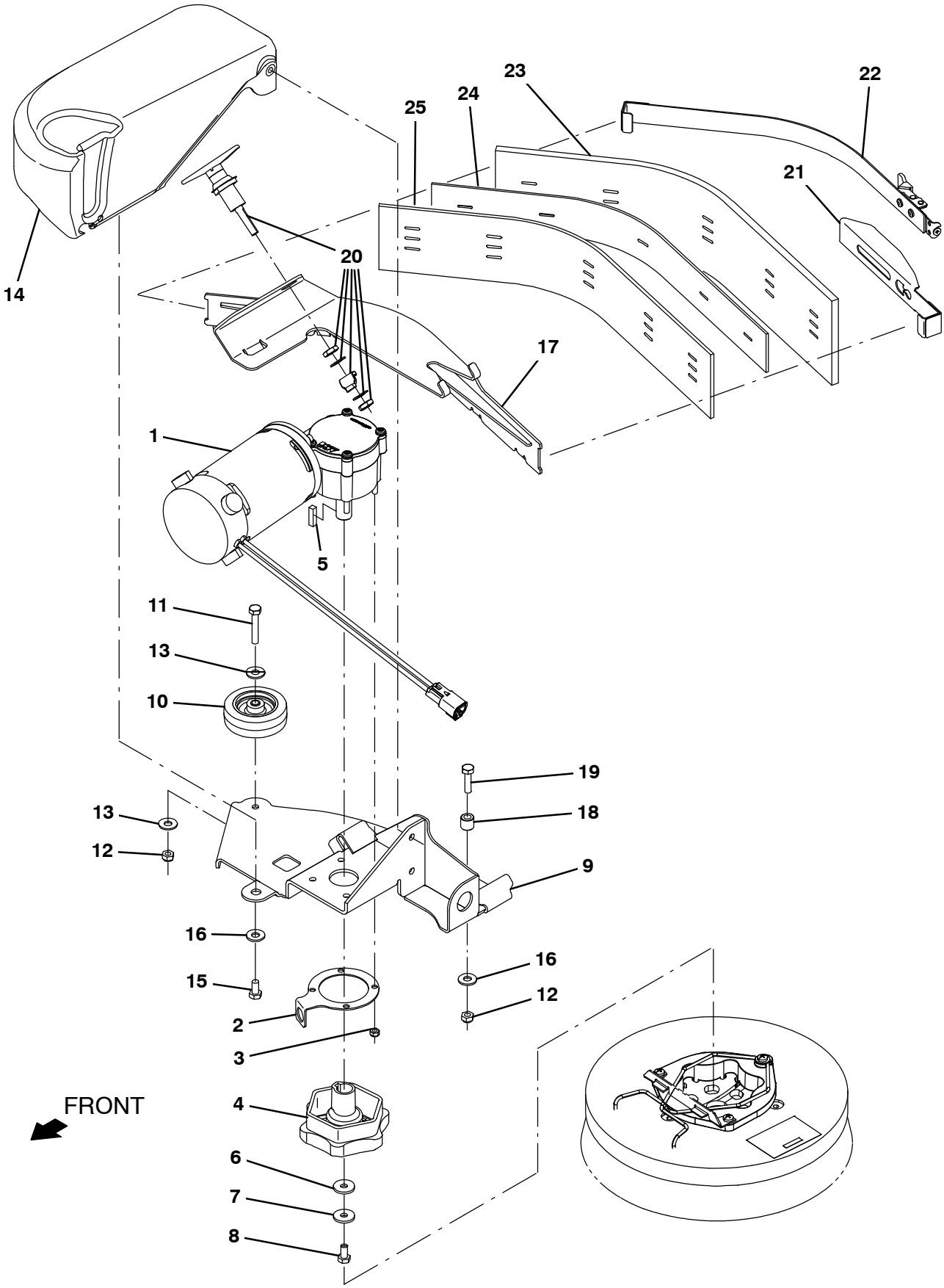

356331

Fig. 11 – Side Brush Motor and Squeegee Group

	Ref.	Part No.	Serial Number	Description	Qty.
▽	1	1245125	(10000000–19999999)	Motor, Ele, 36vdc 0320rpm 0.63hp Gear	1
▲		1242618	(10000000–19999999)	Brush, Motor, [1PC=1Kit]	1
	2	1203439	(10000000–19999999)	Plate, Sppt	1
	3	08712	(10000000–19999999)	Nut, Hex, Lock, M6 X 1.00, Nl, Ss	4
	4	377364	(10000000–19999999)	Hub, Drive, Brush, Disk, 0.75b [6t]	1
	5	00928	(10000000–19999999)	Key, Sq, 0.25 X 0.25, 1.00l	1
	6	1017218	(10000000–19999999)	Washer, Flat, 0.32b 1.00d .12, Ss	1
	7	41186	(10000000–19999999)	Washer, Flat, Belleville, .31	1
	8	09740	(10000000–19999999)	Screw, Hex, M8 X 1.25 X 20, Ss	1
	9	1200417	(10000000–19999999)	Plate Wldt, Deck, Sba	1
	10	1014918	(10000000–19999999)	Wheel, 03.0d 0.88w 0.31b, W/ Bshg, Rbr	1
	11	222505	(10000000–19999999)	Screw, Hex, M8 X 1.25 X 45, Ss	1
	12	08713	(10000000–19999999)	Nut, Hex, Lock, M8 X 1.25, Nl, Ss	2
	13	01685	(10000000–19999999)	Washer, Flat, 0.38b 0.88d .08, Ss	2
	14	9010929	(10000000–19999999)	Cover, Motor, Sba, Afmkt [T12]	1
	15	15675	(10000000–19999999)	Screw, Hex, M8 X 1.25 X 16, Ss	1
	16	01685	(10000000–19999999)	Washer, Flat, 0.38b 0.88d .08, Ss	2
	17	1201327	(10000000–19999999)	Squeegee Wldt, Holder, Sba	1
	18	80409	(10000000–19999999)	Sleeve, P/M, 0.34b 0.63d 0.6l, Bnz	1
	19	09011	(10000000–19999999)	Screw, Hex, M8 X 1.25 X 30, Ss	1
	20	1201149	(10000000–19999999)	Latch, Compression, Sqge, Sba	1
	21	1201609	(10000000–19999999)	Retainer Wldt, Sqge, Sba	1
	22	1201610	(10000000–19999999)	Retainer Wldt, Sqge, Sba, With Latch	1
	23	1201345	(10000000–19999999)	Blade, Sqge, Sba, Linatex	1
	23	1204541	(10000000–19999999)	Blade, Sqge, Sba, Urethane (Option)	1
	23	1204543	(10000000–19999999)	Blade, Sqge, Sba, Gum (Option)	1
	24	1201344	(10000000–19999999)	Spacer, Blade	1
	25	1201343	(10000000–19999999)	Blade, Sqge, Sba, Inner, Linard	1
	25	1204540	(10000000–19999999)	Blade, Sqge, Sba, Inner, Urethane (Option)	1
	25	1204542	(10000000–19999999)	Blade, Sqge, Sba, Inner, Gum (Option)	1

Fig. 12 – Side Brush Pivot Group

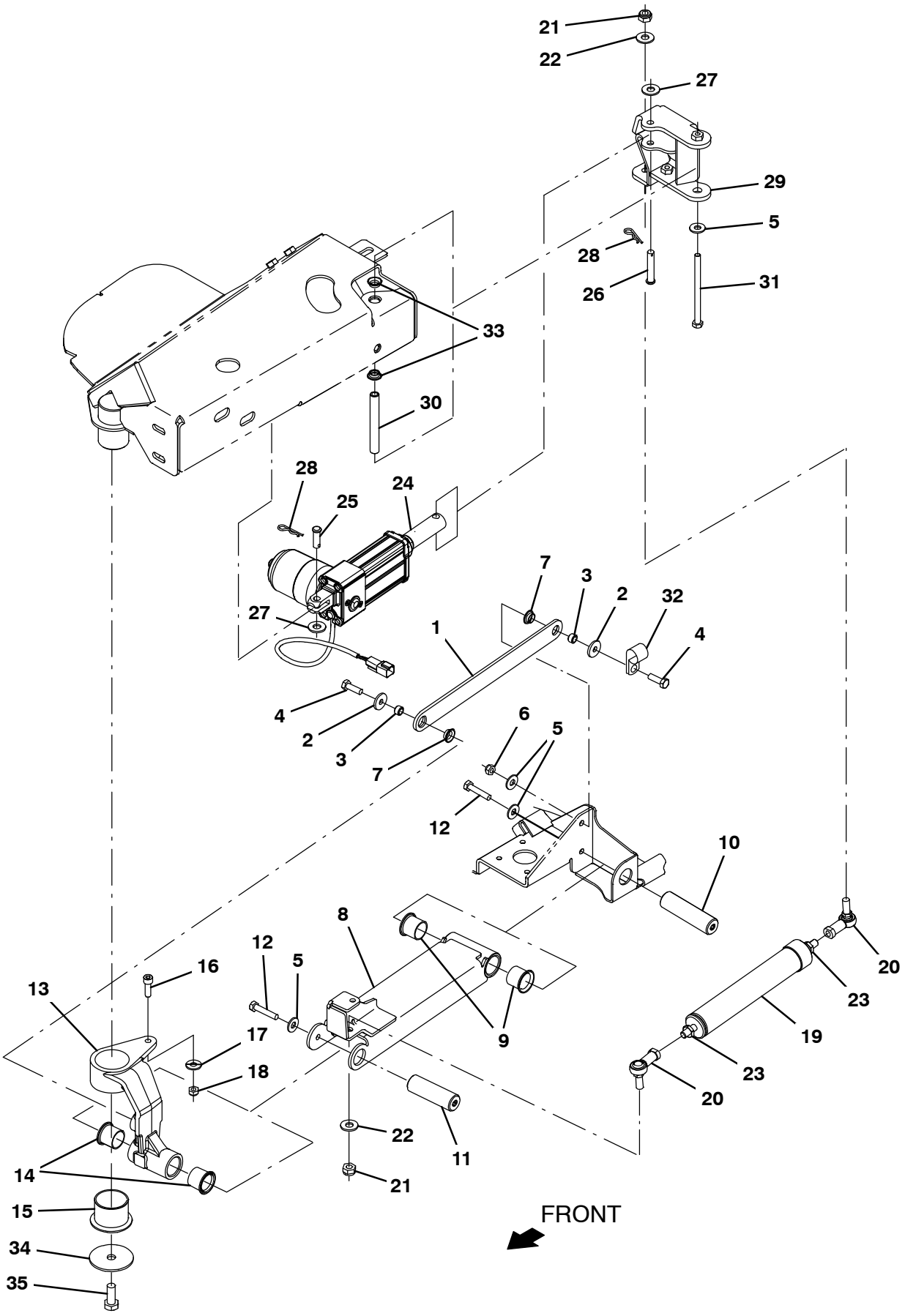

356334

Fig. 12 – Side Brush Pivot Group

	Ref.	Part No.	Serial Number	Description	Qty.
	1	1200939	(10000000–19999999)	Link, Upper	1
	2	1017218	(10000000–19999999)	Washer, Flat, 0.32b 1.00d .12, Ss	2
	3	222516	(10000000–19999999)	Sleeve, P/M, 0.32b 0.50d 0.3l [430ss]	2
	4	09010	(10000000–19999999)	Screw, Hex, M8 X 1.25 X 25, Ss	2
	5	01685	(10000000–19999999)	Washer, Flat, 0.38b 0.88d .08, Ss	5
	6	08713	(10000000–19999999)	Nut, Hex, Lock, M8 X 1.25, Nl, Ss	1
	7	1054662	(10000000–19999999)	Bushing, Flng, 0.50b 0.59d 0.25l	2
▽	8	9011055	(10000000–19999999)	Lift channel Kit, Sba, Afmkt [T12]	1
▲	9	54618	(10000000–19999999)	Bushing, Flng, 1.00b 1.13d 1.00l	2
	10	1201137	(10000000–19999999)	Pin, Pivot, Sba	1
	11	1201575	(10000000–19999999)	Pin, Pivot, Sba	1
	12	09026	(10000000–19999999)	Screw, Hex, M8 X 1.25 X 40, Ss	2
▽	13	9011054	(10000000–19999999)	Pivot Arm Kit, Sba, Afmkt [T12]	1
▲	14	54618	(10000000–19999999)	Bushing, Flng, 1.00b 1.13d 1.00l	2
▲	15	1201101	(10000000–19999999)	Bushing, Flng, 1.75b 1.94d 1.50l	1
▲	16	39308	(10000000–19999999)	Screw, Soc, M8 X 1.25 X 25, 12.9	1
▲	17	01685	(10000000–19999999)	Washer, Flat, 0.38b 0.88d .08, Ss	1
▲	18	08713	(10000000–19999999)	Nut, Hex, Lock, M8 X 1.25, Nl, Ss	1
▽	19	9010938	(10000000–19999999)	Spring Assy, Replmt, Afmkt [T12]	1
▲	20	05686	(10000000–19999999)	Rod–End, M10 X 1.5rh Fem M10 X 1.5stud	2
▲	21	08714	(10000000–19999999)	Nut, Hex, Lock, M10 X 1.5, Nl, Ss	2
▲	22	01686	(10000000–19999999)	Washer, Flat, 0.44b 1.00d .08, Ss	2
▲	23	763064	(10000000–19999999)	Nut, Hex, Jam, M10 X 1.5, [Din439]	2
▽	24	9010941	(10000000–19999999)	Actuator Kit, Sba, Afmkt [T12]	1
▲	25	86240	(10000000–19999999)	Pin, Clevis, 0.38d X 1.13l	1
▲	26	29584	(10000000–19999999)	Pin, Clevis, 0.37d X 2.00l	1
▲	27	01686	(10000000–19999999)	Washer, Flat, 0.44b 1.00d .08, Ss	2
▲	28	44906	(10000000–19999999)	Pin, Cotter, Hair, 0.38d .093 Wir	2
	29	1201094	(10000000–19999999)	Arm Assy, Lift, Actuator	1
	30	1202694	(10000000–19999999)	Sleeve, 0.334b 0.494d 4.00l Stl Pl	1
	31	49883	(10000000–19999999)	Screw, Hex, M8 X 1.25 X 120, 8.8, Fl	1
	32	140314	(10000000–19999999)	Clamp, Cable, Stl, 0.75D X 0.75W, 1Hole	1
	33	1054662	(10000000–19999999)	Bushing, Flng, 0.50b 0.59d 0.25l	2
	34	1200634	(10000000–19999999)	Washer, Flat, 0.48b 2.50d .12, Ss	1
	35	12309	(10000000–19999999)	Screw, Hex, M12 X 1.75 X 30, Ss	1

Fig. 13 – Side Brush Bumper and Mount Group

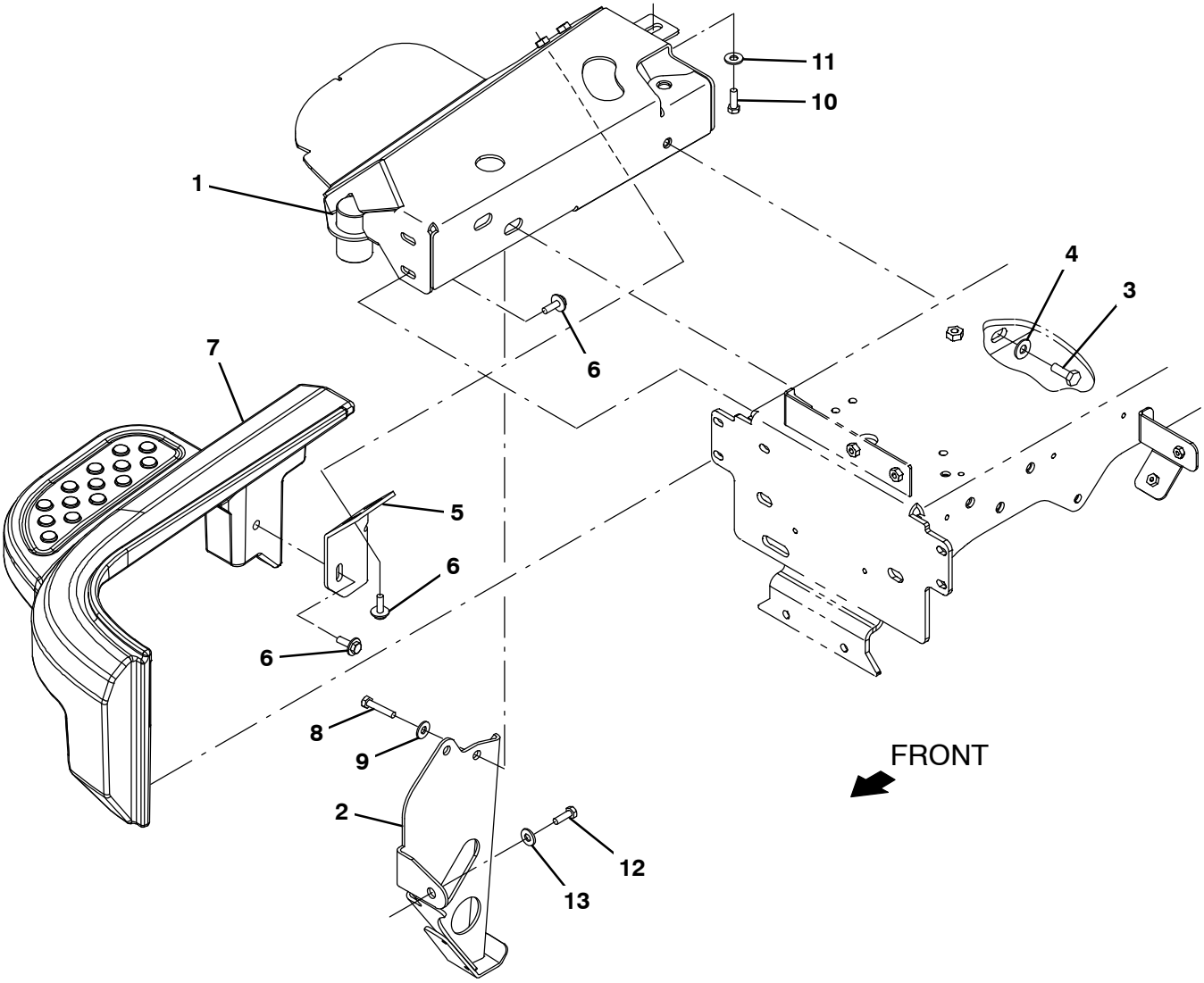

356333

Fig. 13 – Side Brush Bumper and Mount Group

Ref.	Part No.	Serial Number	Description	Qty.
1	1200370	(10000000–19999999)	Bracket Wldt, Mount, Sba	1
2	1202914	(10000000–19999999)	Bracket Wldt, Skid, Anti–Roll	1
3	12317	(10000000–19999999)	Screw, Hex, M10 X 1.50 X 30, Ss	1
4	01686	(10000000–19999999)	Washer, Flat, 0.44b 1.00d .08, Ss	1
5	1202521	(10000000–19999999)	Bracket, Sppt, Door	1
6	1020341	(10000000–19999999)	Screw, Hex, M8 X 1.25 X 20, Ss, Sems	3
7	9010926	(10000000–19999999)	Bumper, Sba, Afmkt [T12]	1
8	09028	(10000000–19999999)	Screw, Hex, M10 X 1.50 X 25, Ss	2
9	01686	(10000000–19999999)	Washer, Flat, 0.44b 1.00d .08, Ss	2
10	09010	(10000000–19999999)	Screw, Hex, M8 X 1.25 X 25, Ss	1
11	01685	(10000000–19999999)	Washer, Flat, 0.38b 0.88d .08, Ss	1
12	12309	(10000000–19999999)	Screw, Hex, M12 X 1.75 X 30, Ss	1
13	140045	(10000000–19999999)	Washer, Flat, 0.51b 1.25d .06, Ss	1

Fig. 14 – Side Brush Solution Supply Group

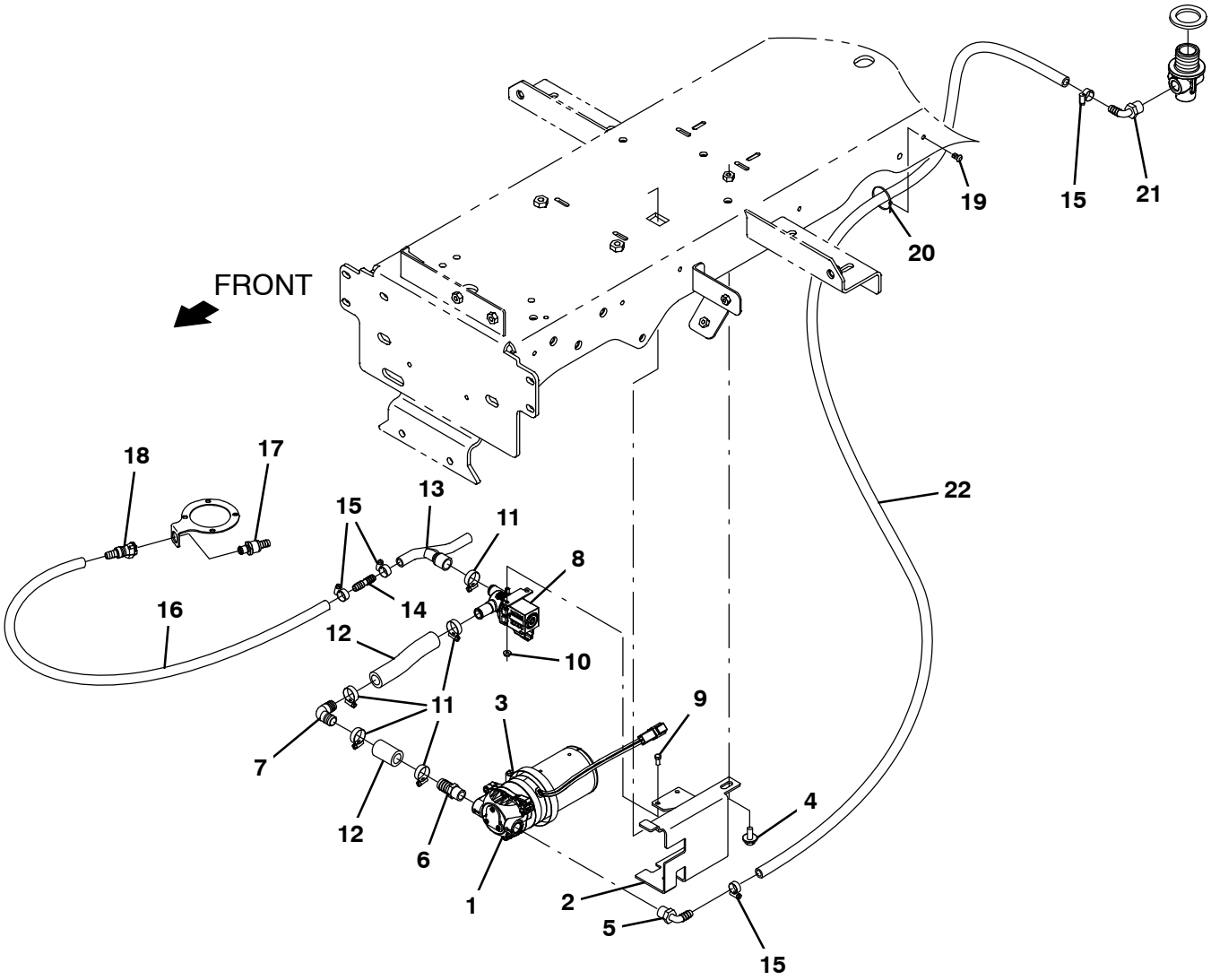

356335

Fig. 14 – Side Brush Solution Supply Group

Ref.	Part No.	Serial Number	Description	Qty.
1	1200713	(10000000–19999999)	Pump, Soltn, 36vdc	1
2	1201313	(10000000–19999999)	Bracket, Pump	1
3	43555	(10000000–19999999)	Clamp, Hose, Wormdrive, 2.62–3.50d	1
4	1020341	(10000000–19999999)	Screw, Hex, M8 X 1.25 X 20, Ss, Sems	1
5	1005630	(10000000–19999999)	Fitting, Plstc, E90, Bm06/Pm06, Nyl	1
6	1013900	(10000000–19999999)	Fitting, Plstc, Str, Bm10/Pm06, Nyl	1
7	391365	(10000000–19999999)	Fitting, Plstc, E90, Bm10/Bm10	1
8	1054795	(10000000–19999999)	Valve, Water, Solenoid, 36vdc Bm12/Bm12	1
9	09738	(10000000–19999999)	Screw, Hex, M5 X 0.80 X 12, Ss	2
10	07789	(10000000–19999999)	Nut, Hex, Flng, M5 X 0.80	2
11	54333	(10000000–19999999)	Clamp, Hose, Wormdrive, 0.31–0.88d, .31w	5
12	1015033	(10000000–19999999)	Hose, Afmkt, Pvc, Brd, 0.62id, 01ft, Clr	1
13	1201336	(10000000–19999999)	Manifold, Soltn, Sba	1
14	20950	(10000000–19999999)	Fitting, Plstc, Str, Bm06/Bm06	1
15	43844	(10000000–19999999)	Clamp, Hose, Wormdrive, 0.25–0.62d, .31w	4
16	1006400	(10000000–19999999)	Hose, Afmkt, Pvc, Brd, 0.38id, 03ft, Clr	2
17	1203438	(10000000–19999999)	Fitting, Plstc, Str, Bm06, Mplg, Male	1
18	1203454	(10000000–19999999)	Fitting, Plstc, Str, Bm06, Cplg, Fem	1
19	1071085	(10000000–19999999)	Clip, Tie, 0.25d, Plstc	2
20	130773	(10000000–19999999)	Tie, Cable, Nyl, 11.0l, .14w, 3.0 Max. D	2
21	1005630	(10000000–19999999)	Fitting, Plstc, E90, Bm06/Pm06, Nyl	1
22	1014976	(10000000–19999999)	Hose, Afmkt, Pvc, Brd, 0.38id, 08ft, Clr	1

Fig. 15 – Side Brush Electrical Group

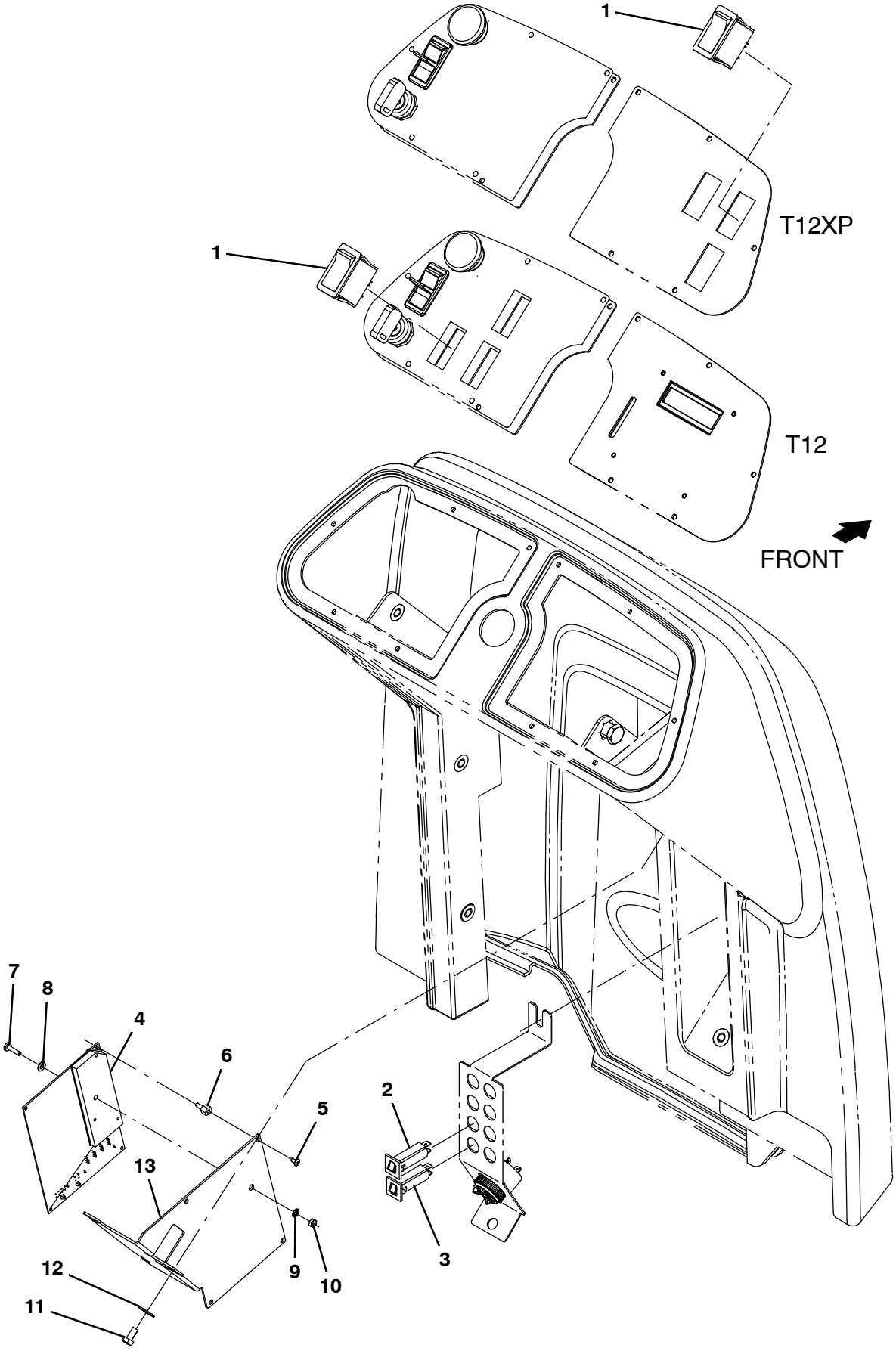

356336

Fig. 15 – Side Brush Electrical Group

Ref.	Part No.	Serial Number	Description	Qty.
1	397889	(10000000–19999999)	Switch, Rocker, Dpst, On / None / On	1
2	1064184	(10000000–19999999)	Circuitbreaker, 02.5a, Resetable	1
3	1064189	(10000000–19999999)	Circuitbreaker, 20.0a, Resetable	1
4	9010932	(10000000–19999999)	Circuit Board Kit, H2o_Sba, Afmkt [T12]	1
5	3701.6	(10000000–19999999)	Screw, Pan, Phl, 06–32 X 0.38, Shtmtl, Ss	4
6	1016825	(10000000–19999999)	Support, Circuitboard	4
7	24265	(10000000–19999999)	Screw, Pan, Phl, M4 X 0.70 X 16, Ss	1
8	70246	(10000000–19999999)	Washer, Flat, 0.19b 0.38d .03, Nyl	1
9	32978	(10000000–19999999)	Washer, Lock, Int, 08	1
10	1049573	(10000000–19999999)	Nut, Hex, Jam, M4 X 0.70, Ss	1
11	09744	(10000000–19999999)	Screw, Hex, M6 X 1.00 X 12, Ss	3
12	01684	(10000000–19999999)	Washer, Flat, 0.27b 0.69d .05, Ss	3
13	1201164	(10000000–19999999)	Bracket, Circuit Board, Sba	1

Fig. 16 – Side Brush Wire Harness Group

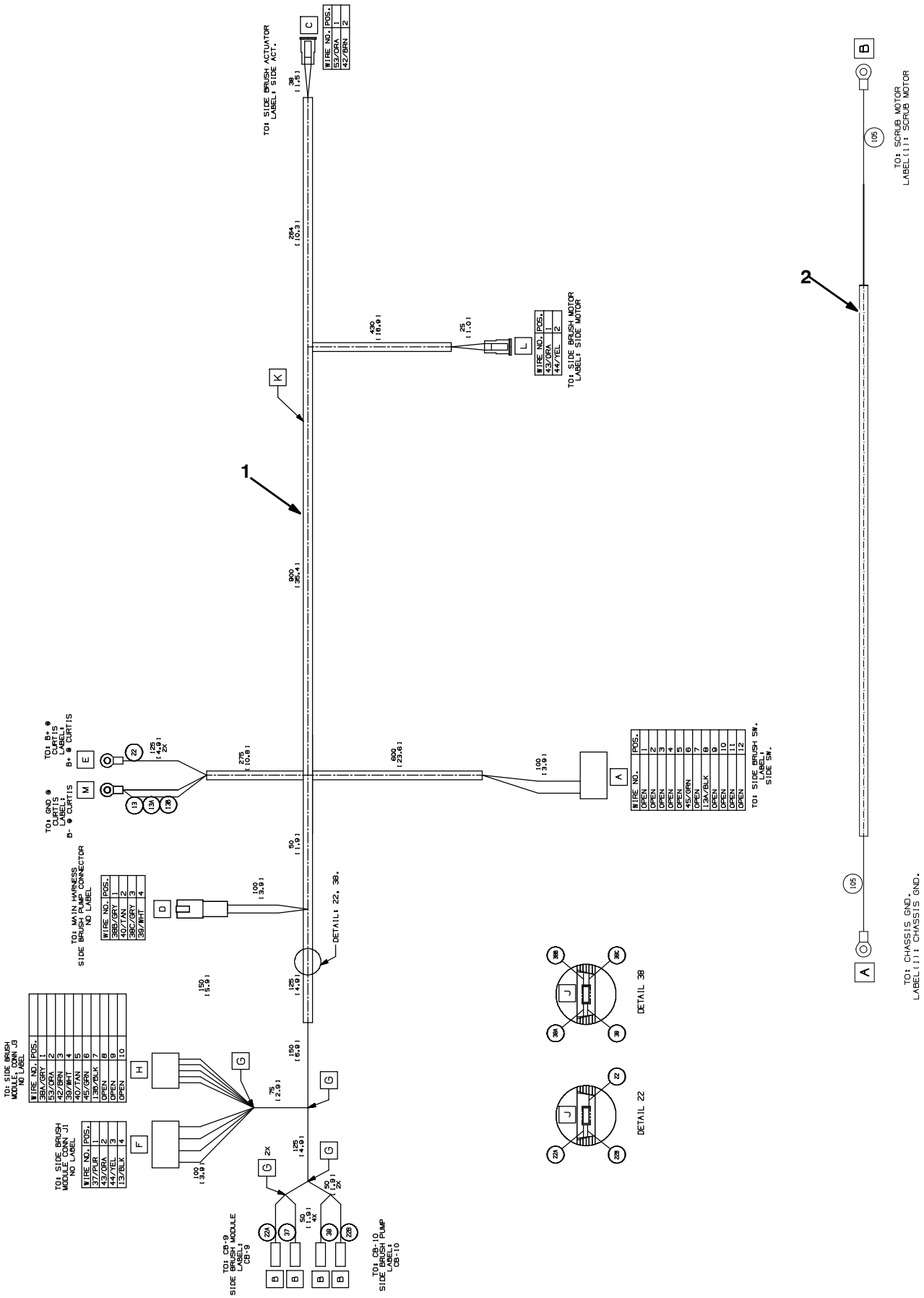

356332

Fig. 16 – Side Brush Wire Harness Group

Ref.	Part No.	Serial Number	Description	Qty.
1	1069639	(10000000–19999999)	Harness, Side Brush, Ele [T12]	1
2	1076673	(10000000–19999999)	Harness, Ele [Gnd., T12]	1

Fig. 17 – Spray Hose Kit

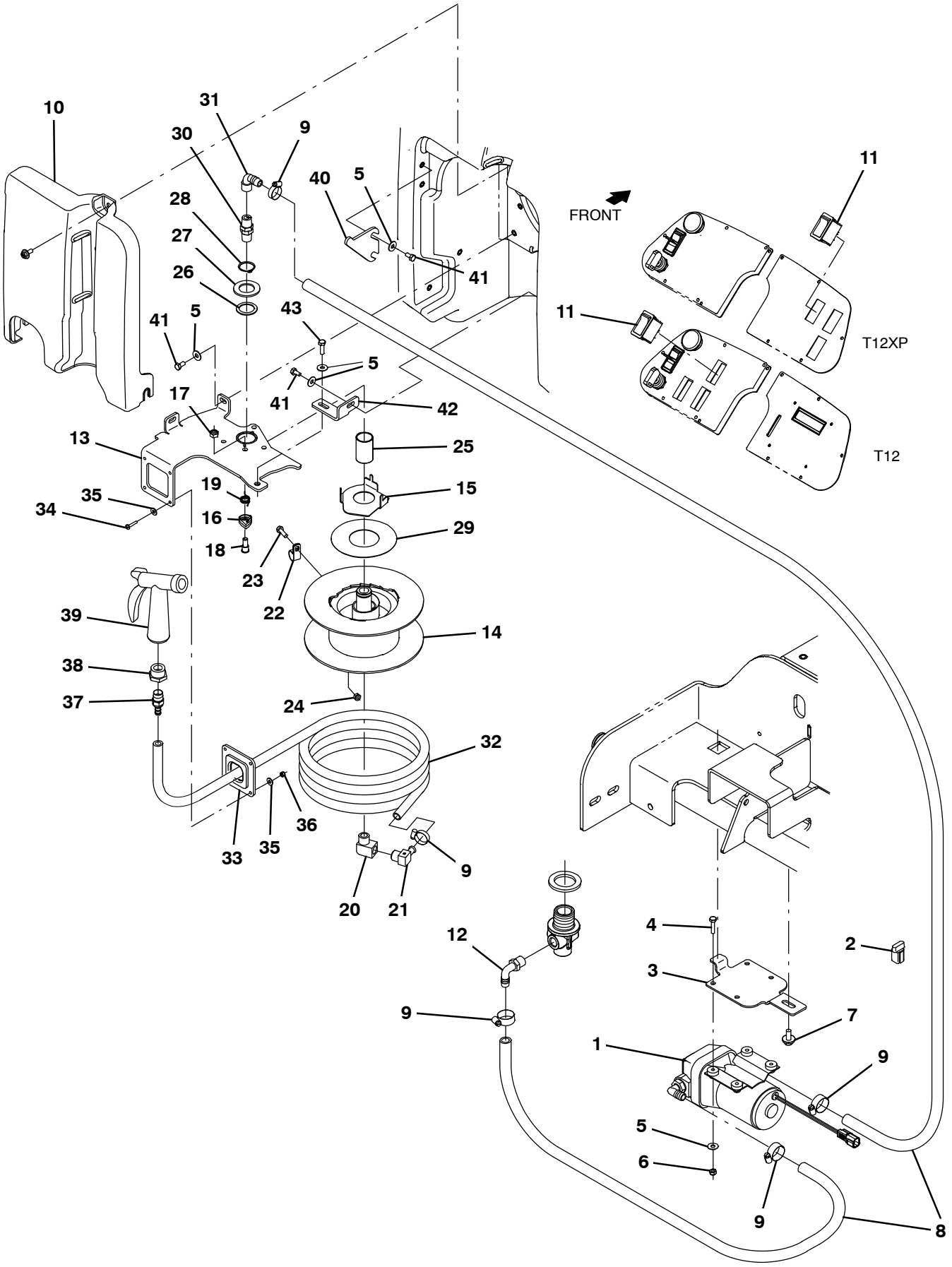

356342

Fig. 17 – Spray Hose Kit

	Ref.	Part No.	Serial Number	Description	Qty.
▽		9009852	(10000000–19999999)	Spray Hose Kit, Ci [T12]	1
▲	1	1054178	(10000000–19999999)	Pump, Soltn, Ele, 36vdc, 45psi	1
▲	2	1056982	(10000000–19999999)	Diode, Ele, Plug	1
▲	3	1201314	(10000000–19999999)	Bracket, Pump, Spray	1
▲	4	09007	(10000000–19999999)	Screw, Hex, M6 X 1.00 X 25, Ss	4
▲	5	01684	(10000000–19999999)	Washer, Flat, 0.27b 0.69d .05, Ss	12
▲	6	08712	(10000000–19999999)	Nut, Hex, Lock, M6 X 1.00, Nl, Ss	4
▲	7	1020341	(10000000–19999999)	Screw, Hex, M8 X 1.25 X 20, Ss, Sems	1
▲	8	1011412	(10000000–19999999)	Hose, Afmkt, Pvc, Brd, 0.50Id, 08Ft., Clr	1
▲	9	54333	(10000000–19999999)	Clamp, Hose, Wormdrive, 0.31–0.88d, .31w	5
▲	10	1202867	(10000000–19999999)	Cover, Access, Vacfan, Trimmed	1
▲	11	398500	(10000000–19999999)	Switch, Rocker, Dpdt, On / None / On	1
▲	12	64778	(10000000–19999999)	Fitting, Plstc, E90, Bm08/Pm06	1
▲	13	1200239	(10000000–19999999)	Plate Wldt, Mtg, Hose–Reel [Cassoday]	1
▲	14	1200313	(10000000–19999999)	Reel Assy, Hose, Small	1
▲	15	1203947	(10000000–19999999)	Washer, Retainer, Spring	1
▲	16	1201393	(10000000–19999999)	Pawl, Ratchet	1
▲	17	08709	(10000000–19999999)	Nut, Hex, Lock, M8 X 1.25, Nl	1
▲	18	1056719	(10000000–19999999)	Bolt, Shld, .41d X 0.35, M8 X 1.25	1
▲	19	1201423	(10000000–19999999)	Spring, Torsion, Hose Reel	1
▲	20	24584	(10000000–19999999)	Fitting, Brs, E90, Pf06/Pm06, Spcl	1
▲	21	1060128	(10000000–19999999)	Fitting, Brs, E90, Bm06/Pm06, Short	1
▲	22	33584	(10000000–19999999)	Clamp, Cable, Stl, 0.63d X 0.50w, 1hole	1
▲	23	06943	(10000000–19999999)	Screw, Hex, M6 X 1.00 X 20, 8.8	1
▲	24	08708	(10000000–19999999)	Nut, Hex, Lock, M6 X 1.00, Nl	1
▲	25	1057816	(10000000–19999999)	Bushing, Sleeve, 1.00b 1.13d 1.750l, Fgl	1
▲	26	1057814	(10000000–19999999)	Washer, Thrust, Plstc 1.02b 1.38d	1
▲	27	32598	(10000000–19999999)	Washer, Flat, 1.02b 1.75d .12, Stl	1
▲	28	09005	(10000000–19999999)	Ring, Retaining, Ext, 1.00d, Basic	1
▲	29	1066919	(10000000–19999999)	Washer, Thrust, 50.0b 110.0d 0.79w	1
▲	30	1200394	(10000000–19999999)	Fitting, Swivel, Str, Pm06/Pm06, Brs	1
▲	31	47388	(10000000–19999999)	Fitting, Brs, E90, Em08/Pm06	1
▲	32	9010936	(10000000–19999999)	Hose, Spray, Afmkt [T12]	1
▲	33	1200665	(10000000–19999999)	Guide, Hose, Hdpe [Cassoday]	1
▲	34	12323	(10000000–19999999)	Screw, Pan, Phl, M4 X 0.70 X 20, Ss	4
▲	35	01683	(10000000–19999999)	Washer, Flat, 10, Ss	8
▲	36	33932	(10000000–19999999)	Nut, Hex, Lock, M4 X 0.70, Nl, Ss	4
▲	37	1060428	(10000000–19999999)	Fitting, Stl, Str, Bm06/Pm06, Swivel	1
▲	38	1027976	(10000000–19999999)	Fitting, Brs, Str, Pf06/Pm12	1
▲	39	769785	(10000000–19999999)	Nozzle, Spray, Gun	1
▲	40	1201096	(10000000–19999999)	Hook, Nozzle, Hdpe	1
▲	41	09744	(10000000–19999999)	Screw, Hex, M6 X 1.00 X 12, Ss	6
▲	42	1200732	(10000000–19999999)	Plate, Mtg, Hose Reel	1
▲	43	08716	(10000000–19999999)	Screw, Hex, M6 X 1.00 X 20, Ss	1

Fig. 18 – Vacuum Wand Kit

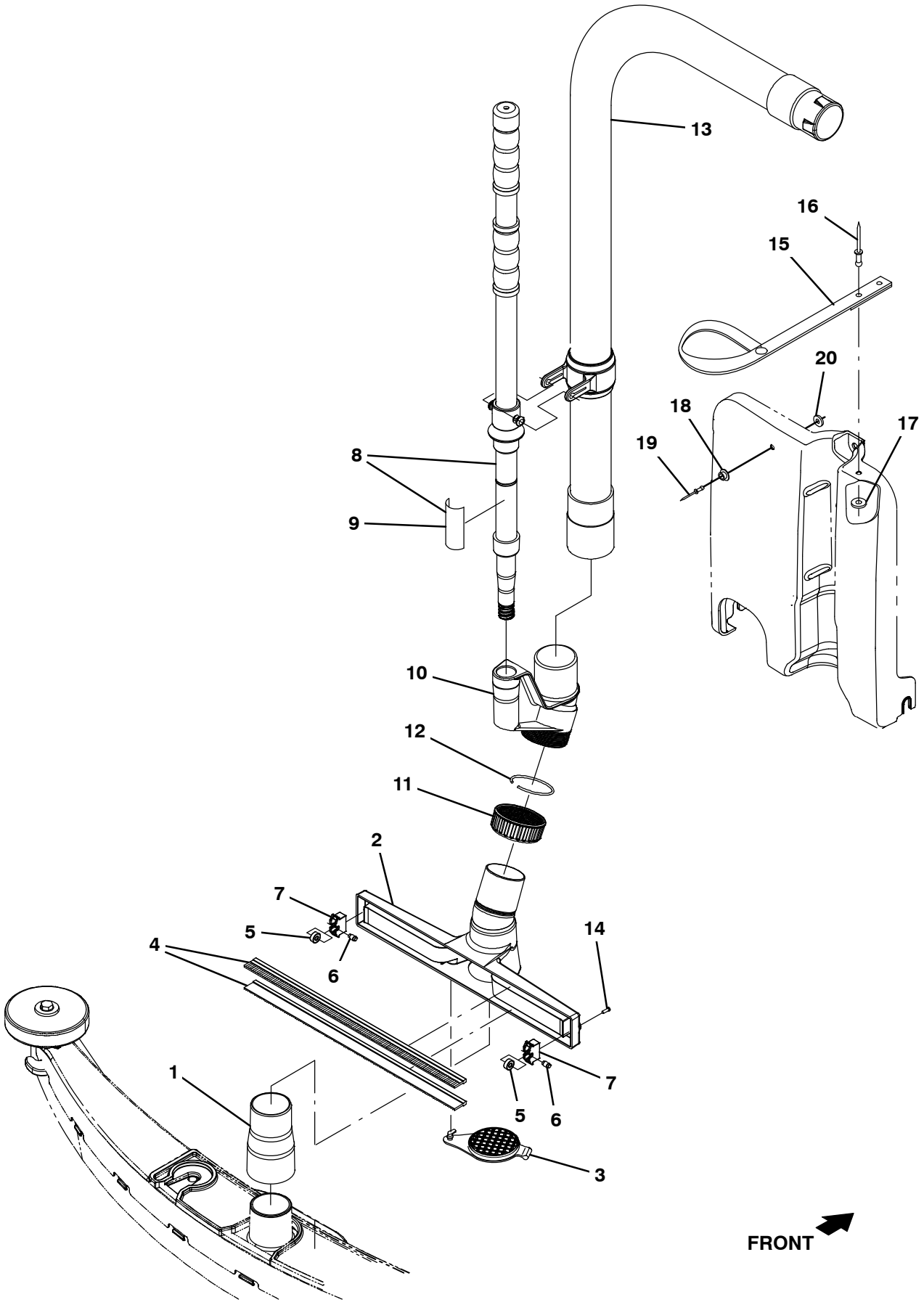

356345

Fig. 18 – Vacuum Wand Kit

	Ref.	Part No.	Serial Number	Description	Qty.
▽		9010356	(10000000–19999999)	Wand Kit, Wet, Ci [T12]	1
▲	1	1060536	(10000000–19999999)	Cuff, Adapter, 1.75 X 2.00, Pvc	1
▲	2	1060440	(10000000–19999999)	Squeegee, Hand	1
▲	3	1060691	(10000000–19999999)	Plug, Adapter, Port	1
▲	4	1061356	(10000000–19999999)	Retainer, Blade, Sqge, 14.2l (Set of 2)	1
▲	5	1061570	(10000000–19999999)	Bearing, Ball, 0.24b 0.51d 0.20w [2seal]	2
▲	6	1061571	(10000000–19999999)	Pin, Axle, Brg	2
▲	7	1022671	(10000000–19999999)	Housing, Sqge, Holder, Wheel, F/609648	2
▲▽	8	9008155	(10000000–19999999)	Handle Kit, Wand, Afmkt	1
▲▲	9	1062659	(10000000–19999999)	Label, Opertnl, Vacuum Wand Handle	1
▲	10	1060708	(10000000–19999999)	Adapter, Swivel, 1.75, Abs	1
▲	11	1060718	(10000000–19999999)	Nut, Compression, 2.25–12, Abs	1
▲	12	1060720	(10000000–19999999)	Ring, Compression	1
▲	13	1200642	(10000000–19999999)	Hose Assy, Sqge, W/2cuff [Cassoday]	1
▲	14	763149	(10000000–19999999)	Screw, Pan, 06– X 0.38, F/ Plstc	2
▲	15	1061811	(10000000–19999999)	Strap, Retainer, Handle	1
▲	16	1067350	(10000000–19999999)	Rivet, Blind, .188d X 0.53 X .62d, Alm	2
▲	17	86308	(10000000–19999999)	Washer, Flat, .19b .50d .06, Alm, Blind	2
▲	18	1061812	(10000000–19999999)	Catch, Snap, Push, Mal	1
▲	19	01335	(10000000–19999999)	Rivet, Blind, .125d X 0.44 X .25d, Alm	1
▲	20	02892	(10000000–19999999)	Washer, Flat, 0.12b 0.38d .03, Pl	1

Fig. 19 – Telemetry Group (S/N 10000000–10967790)

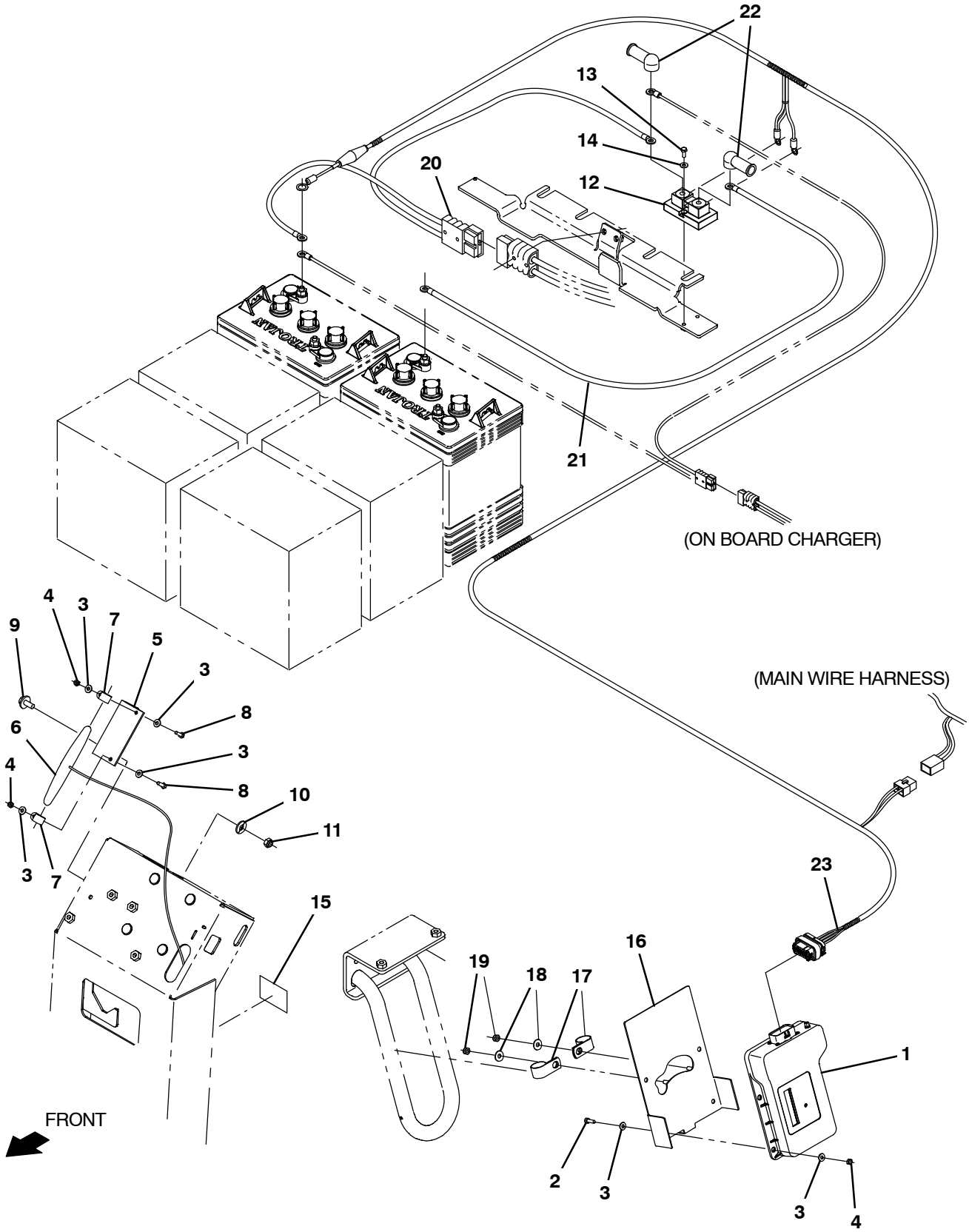

356357

Fig. 19 – Telemetry Group (S/N 10000000–10967790)

	Ref.	Part No.	Serial Number	Description	Qty.
	1	1069467	(10000000–10967790)	Controlbox Assy, Telem [Usa, 3G]	1
	1	1070541	(10000000–10967790)	Controlbox Assy, Telem [3G, Intl]	1
	2	24199	(10000000–10967790)	Screw, Hex, M5 X 0.80 X 16, Ss	4
	3	01683	(10000000–10967790)	Washer, Flat, 10, Ss	12
	4	06549	(10000000–10967790)	Nut, Hex, Lock, M5 X 0.80, Nl	6
	5	1070402	(10000000–10967790)	Angle, Mtg, Antenna, Telem	1
	6	1070659	(10000000–10967790)	Antenna, Telem, 70 In [Gprs]	1
	7	140916	(10000000–10967790)	Clamp, Cable, Nyl, 0.62d, Nat	2
	8	24199	(10000000–10967790)	Screw, Hex, M5 X 0.80 X 16, Ss	2
	9	1020341	(10000000–10967790)	Screw, Hex, M8 X 1.25 X 20, Ss, Sems	2
	10	01685	(10000000–10967790)	Washer, Flat, 0.38b 0.88d .08, Ss	2
	11	08713	(10000000–10967790)	Nut, Hex, Lock, M8 X 1.25, Nl, Ss	2
	12	1070384	(10000000–10967790)	Shunt, 050mv 250a	1
	13	12323	(10000000–10967790)	Screw, Pan, Phl, M4 X 0.70 X 20, Ss	2
	14	19064	(10000000–10967790)	Washer, Flat, 0.16b 0.38d .05, Pl, 06	2
	15	1069580	(10000000–10967790)	Label, Opertnl, Telem [Fcc/Ic]	1
	16	1203695	(10000000–10967790)	Bracket Wldt, Mtg, Box	1
	17	69234	(10000000–10967790)	Clamp, Cable, Stl, 1.00d X 0.75w, 1hole	2
	18	01684	(10000000–10967790)	Washer, Flat, 0.27b 0.69d .05, Ss	2
	19	08712	(10000000–10967790)	Nut, Hex, Lock, M6 X 1.00, Nl, Ss	2
	20	1070978	(10000000–10967790)	Cable Assy, 4ga [T12 – Telemetry]	1
	21	1070498	(10000000–10967790)	Cable, 4ga, Blk [6200e, Telemetry]	1
	22	611221	(10000000–10967790)	Boot, Terminal, Battery, 25.4mm, Blk	2
▽	23	1070042	(10000000–10967790)	Harness, Ele, [Telemetry T12]	1
▲		9009990	(10000000–10967790)	Fuse. 002A. 250Vdc, Cartridge	1

Fig. 20 – Telemetry Group (S/N 10967791–19999999)

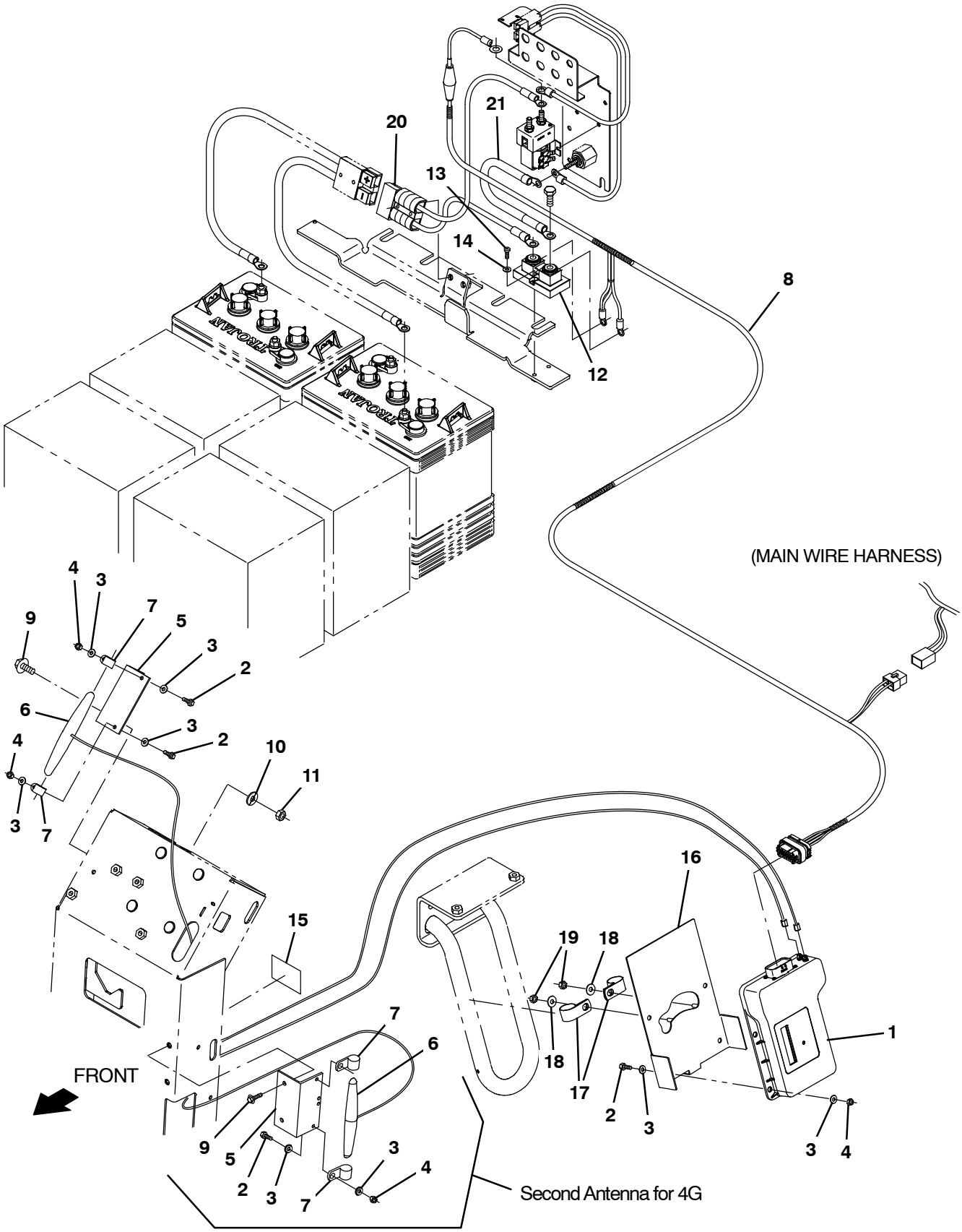

356357

Fig. 20 – Telemetry Group (S/N 10967791–19999999)

	Ref.	Part No.	Serial Number	Description	Qty.
	1	9010085	(10967791–19999999)	Control Box Assy Kit, Replmt, Telem[USA]	1
	1	9010086	(10967791–19999999)	Control Box Assy Kit, Replmt, Telem[INTL]	1
	2	24199	(10967791–19999999)	Screw, Hex, M5 X 0.80 X 16, Ss	8
	3	01683	(10967791–19999999)	Washer, Flat, 10, Ss	16
	4	06549	(10967791–19999999)	Nut, Hex, Lock, M5 X 0.80, Nl	8
	5	1070402	(10967791–19999999)	Angle, Mtg, Antenna, Telem	2
	6	1247522	(10967791–19999999)	Antenna, Telem [4G, 72”]	2
	7	140916	(10967791–19999999)	Clamp, Cable, Nyl, 0.62d, Nat	4
▽	8	1070042	(10967791–19999999)	Harness, Ele, [Telemetry T12]	1
▲		9009990	(10967791–19999999)	Fuse. 002A. 250Vdc, Cartridge	1
	9	06947	(10967791–19999999)	Screw, Hex, M6 X 1.00 X 40, 8.8	4
	10	01685	(10967791–19999999)	Washer, Flat, 0.38b 0.88d .08, Ss	2
	11	08713	(10967791–19999999)	Nut, Hex, Lock, M8 X 1.25, Nl, Ss	2
	12	1070384	(10967791–19999999)	Shunt, 050mv 250a	1
	13	12323	(10967791–19999999)	Screw, Pan, Phl, M4 X 0.70 X 20, Ss	2
	14	19064	(10967791–19999999)	Washer, Flat, 0.16b 0.38d .05, Pl, 06	2
	15	1069580	(10967791–19999999)	Label, Opertnl, Telem [Fcc/Ic]	1
	16	1203695	(10967791–19999999)	Bracket Wldt, Mtg, Box	1
	17	69234	(10967791–19999999)	Clamp, Cable, Stl, 1.00d X 0.75w, 1hole	2
	18	01684	(10967791–19999999)	Washer, Flat, 0.27b 0.69d .05, Ss	2
	19	08712	(10967791–19999999)	Nut, Hex, Lock, M6 X 1.00, Nl, Ss	2
	20	1076675	(10967791–19999999)	Cable Assy, 4ga [T12 – Litelem]	1
	21	1070358	(10967791–19999999)	Cable, 2ga, Blk, Telem [T16]	1

Fig. 21 – Battery Group, 36V 360Ah

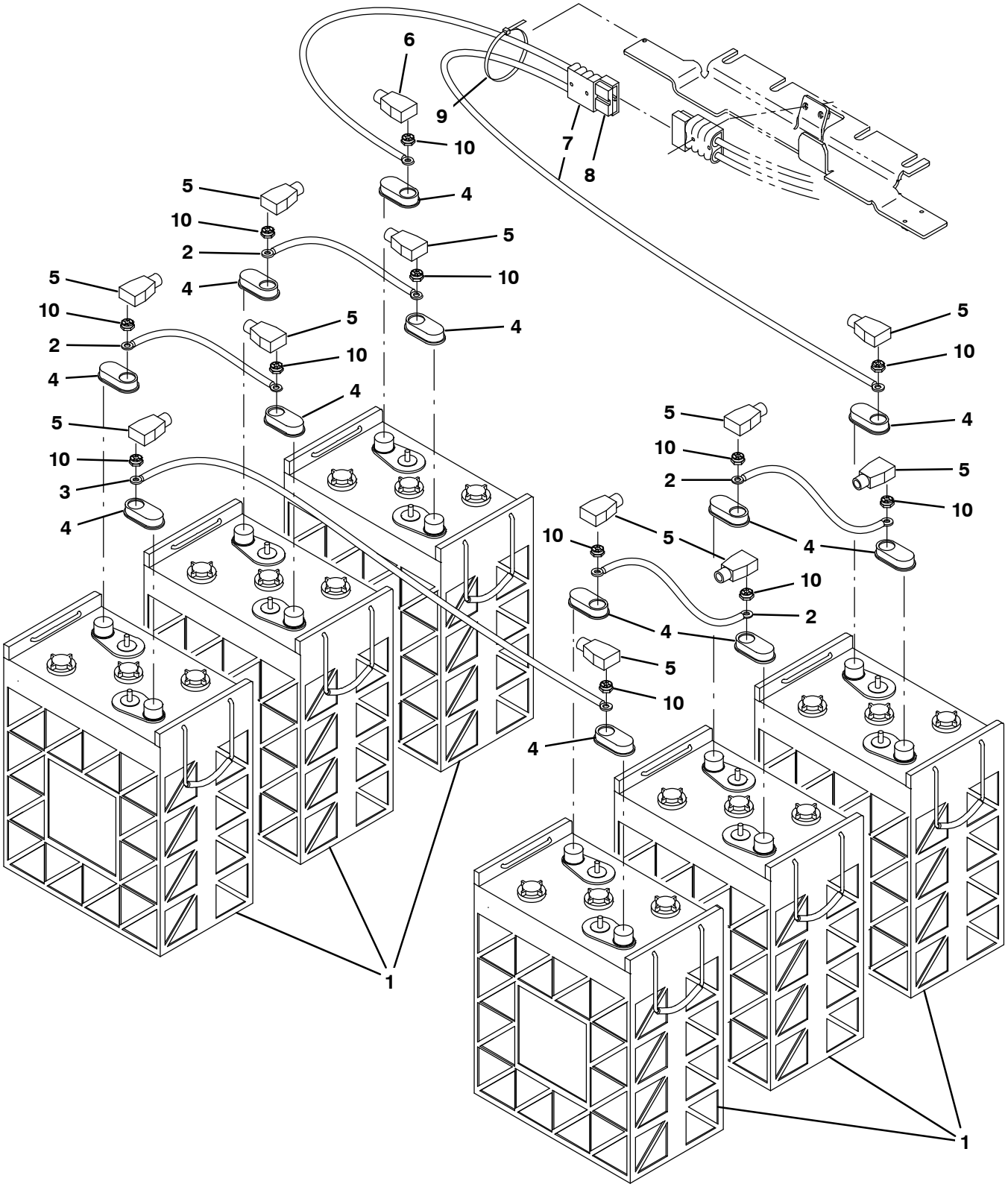

356356

Fig. 21 – Battery Group, 36V 360Ah

	Ref.	Part No.	Serial Number	Description	Qty.
	1	1070587	(10000000–19999999)	Battery, Wet, 06Vdc 0360Ah, W/Carton	6
	2	223356	(10000000–19999999)	Cable, 04ga 12.0l Blk .34ring /.34ring	4
	3	223364	(10000000–19999999)	Cable, 04ga 18.0l Blk .34ring /.34ring	1
	4	1041030	(10000000–19999999)	Cap, Battery	12
	5	68872	(10000000–19999999)	Boot, Terminal, Battery, 02–01Ga, Blk	10
	6	68873	(10000000–19999999)	Boot, Terminal, Battery, 02–01Ga, Red	1
▽	7	223361	(10000000–19999999)	Cable Assy, 04ga .34ring /.34ring, 175a	1
▲	8	22892	(10000000–19999999)	Connector, Anderson, 175a, Gray	1
	9	130773	(10000000–19999999)	Tie, Cable, Nyl, 11.0l, .14w, 3.0 Max. D	1
	10	87435	(10000000–19999999)	Nut, Hex, Flexlock, .31–18	12

Fig. 22 – Battery Group, 36V 350Ah

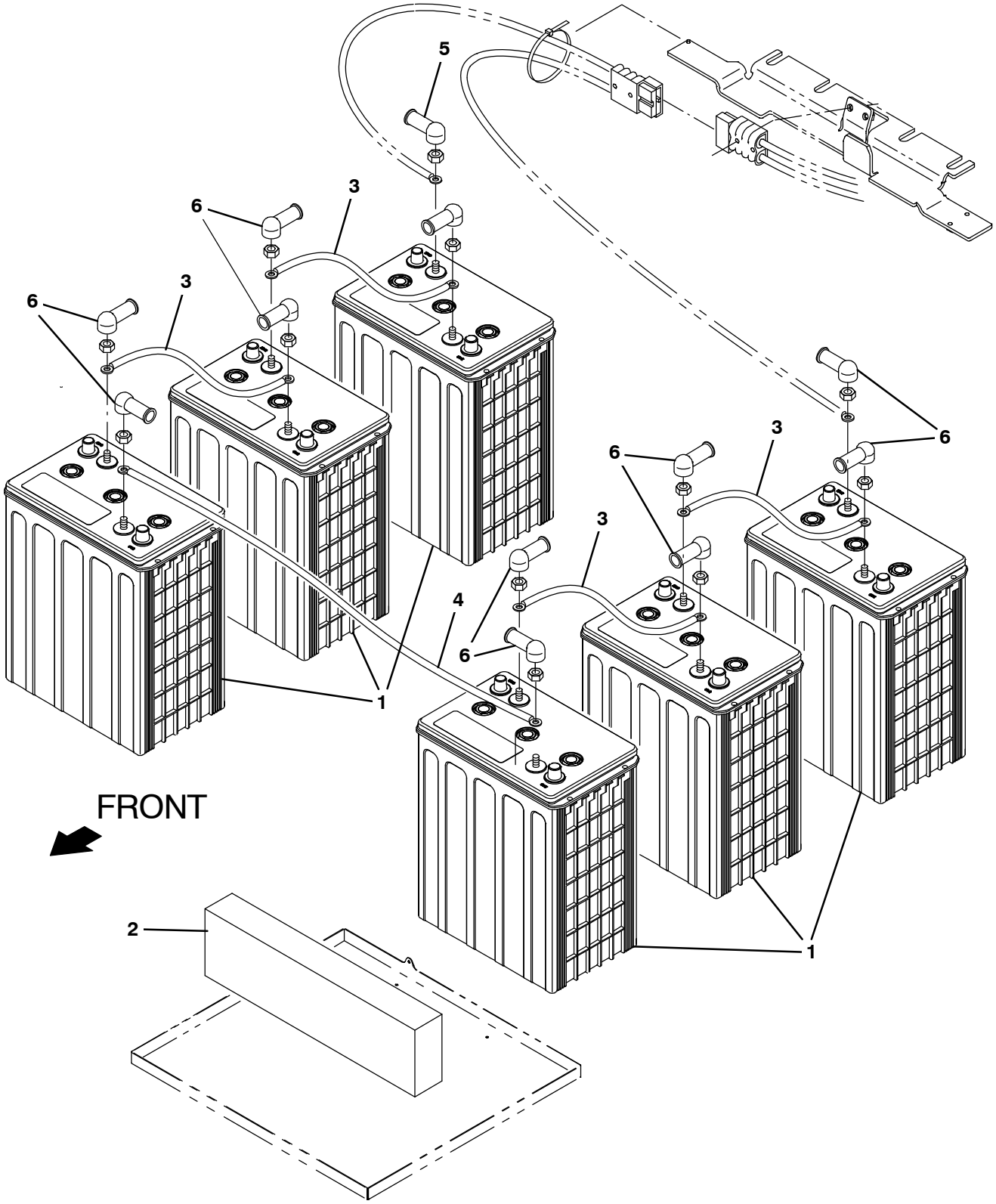

357176

Fig. 22 – Battery Group, 36V 350Ah

Ref.	Part No.	Serial Number	Description	Qty.
1	1262287	(10000000–19999999)	Battery, Agm, 06vdc 350Ah	6
2	630375	(10000000–19999999)	Spacer, Battery, Foam, 1.25 X 3.3 X 13.7	1
3	223355	(10000000–19999999)	Cable, 04ga 08.0l Blk .34ring /.34ring	4
4	223364	(10000000–19999999)	Cable, 04ga 18.0l Blk .34ring /.34ring	1
5	1016314	(10000000–19999999)	Boot, Bulb, .50id 1.00id 2.50l, Red	1
6	611221	(10000000–19999999)	Boot, Terminal, Battery, 25.4mm, Blk	11

Fig. 23 – Battery Group, Lithium–Ion, 36V, 2 Battery Kit

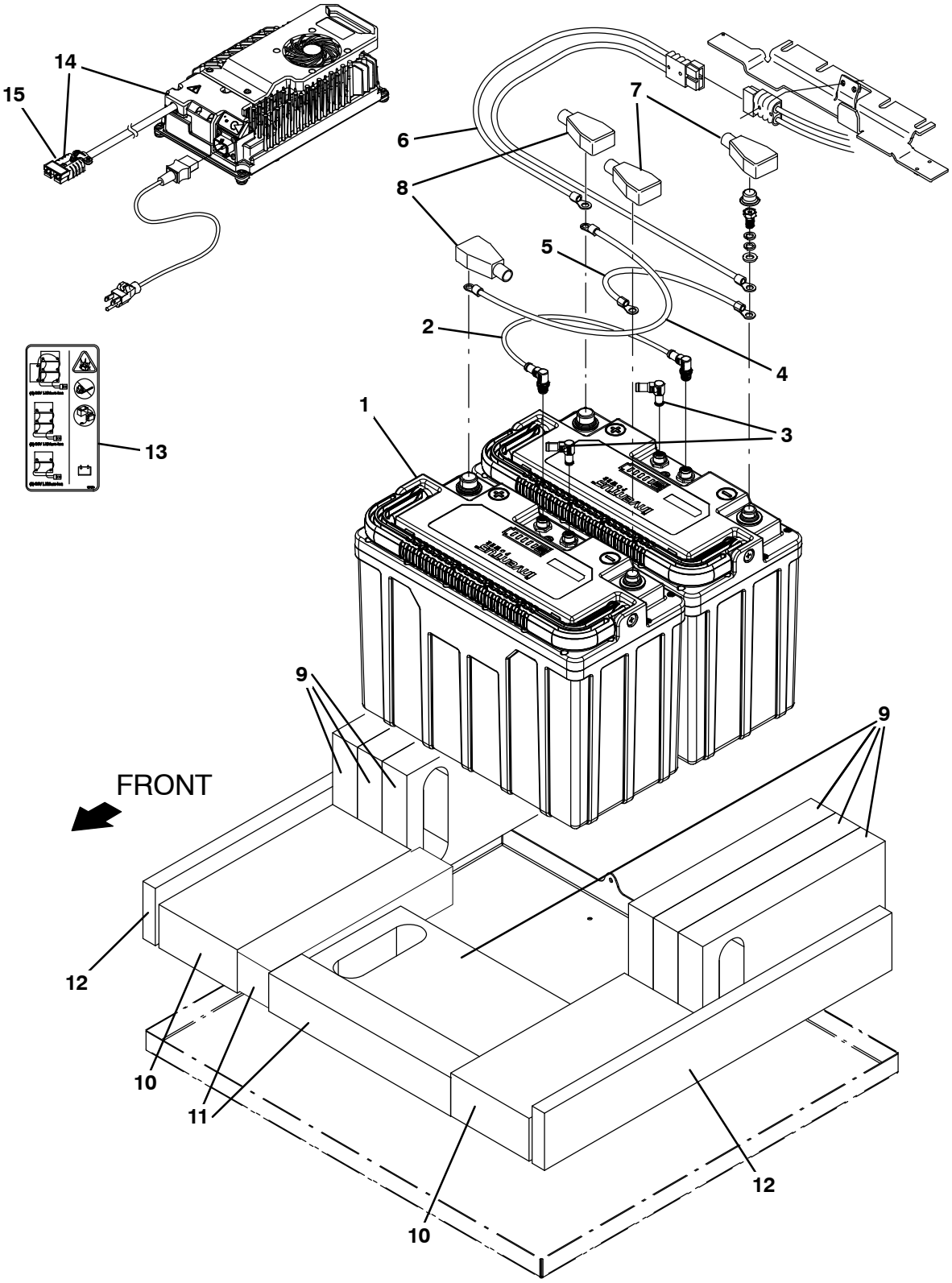

357272

Fig. 23 - Battery Group, Lithium-Ion, 36V, 2 Battery Kit

	Ref.	Part No.	Serial Number	Description	Qty.
▽		9023244	(10000000- 19999999)	Con Kit, Lion, 36V, 2Bat, Afmkt, NA	1
▲	1	9052013	(10000000- 19999999)	Battery, Replmt, Li- Ion, 36v, 80 Ah	2
▲	2	1077084	(10000000- 19999999)	Cable Assy, 8 Pos, Male To Male, 19.7l	1
▲	3	1266966	(10000000- 19999999)	Resistor, Ele, Plug [120, 1/2w, 5%]	2
▲	4	1077083	(10000000- 19999999)	Cable, 04ga 18.0l Red .41ring /.41ring	1
▲	5	223364	(10000000- 19999999)	Cable, 04ga 18.0l Blk .34ring /.34ring	1
▲	6	1271149	(10000000- 19999999)	Cable Assy, 04ga .50ring /.50ring, 175a	1
▲	7	68872	(10000000- 19999999)	Boot, Terminal, Battery, 02- 01ga, Blk	2
▲	8	68873	(10000000- 19999999)	Boot, Terminal, Battery, 02- 01ga, Red	2
▲	9	1271753	(10000000- 19999999)	Weight, Counter, 25.0lb, 1.5 X 11 X 6	7
▲	10	1247131	(10000000- 19999999)	Spacer, Battery, Foam, 2.25 X 4.8 X 10.5	2
▲	11	83415	(10000000- 19999999)	Spacer, Battery, Foam, 2.00 X 2.0 X 11.0	2
▲	12	222473	(10000000- 19999999)	Spacer, Battery, Foam, 0.75 X 3.0 X 21.0	2
▲	13	1271984	(10000000- 19999999)	Label, Hzrd, Battery [T12]	2
▲▽	14	9023334	(10000000- 19999999)	Charger Kit,Li- Ion,36vdc,1200w [Offb]	2
▲▲	15	130155	(10000000- 19999999)	Connector, Battery, 6ga 50a, Gray[2cont]	1

Fig. 24 – Battery Expansion Kit, Lithium–Ion, 36V

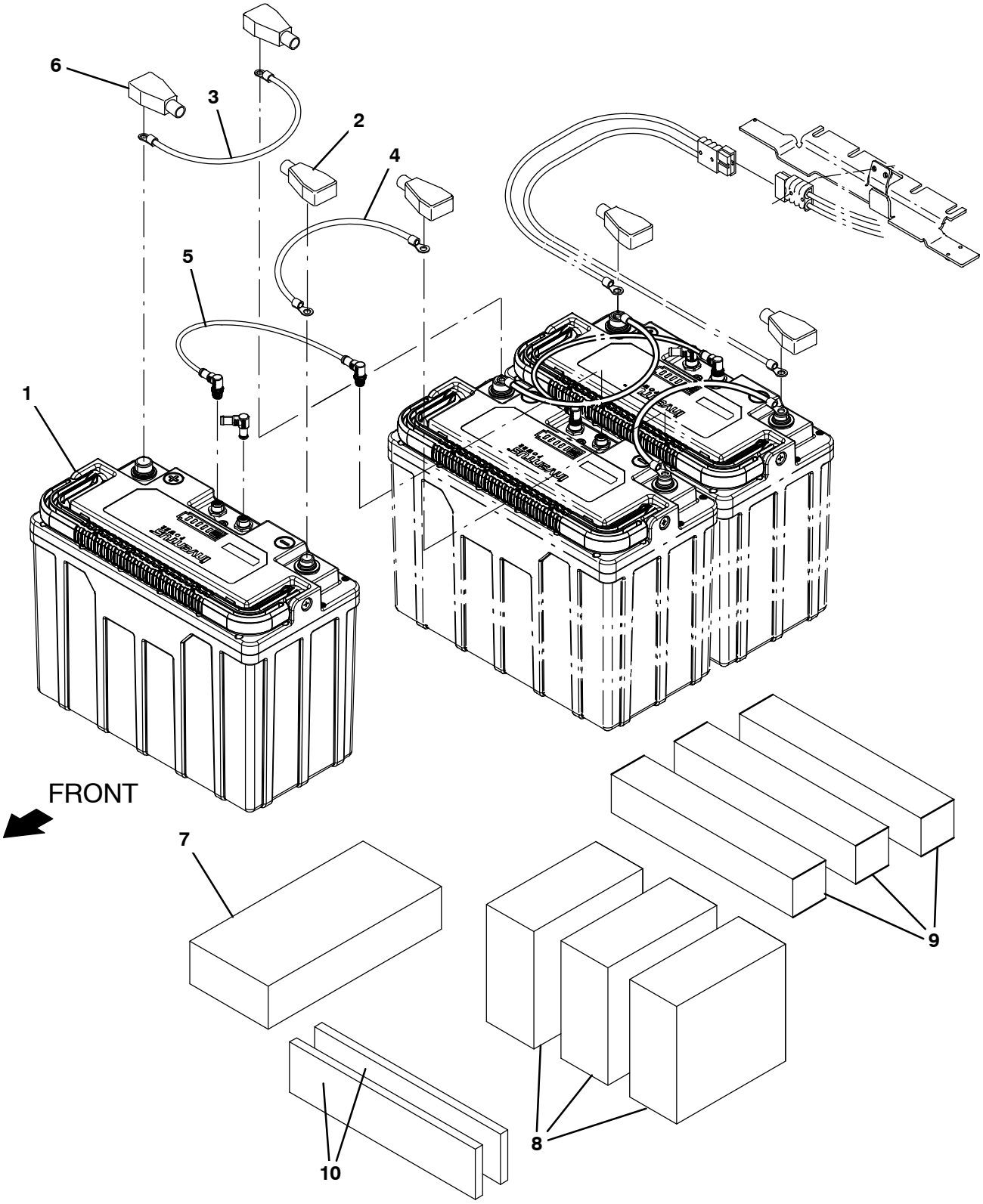

357273

Fig. 23 – Battery Expansion Kit, Lithium–Ion, 36V

	Ref.	Part No.	Serial Number	Description	Qty.
▽		9023246	(10000000–19999999)	Bat Expansion Kit, Lion, 36v, Na [T12]	1
▲	1	9052013	(10000000–19999999)	Battery, Replmt, Li–Ion, 36v, 80 Ah	1
▲	2	68872	(10000000–19999999)	Boot, Terminal, Battery, 02–01ga, Blk	1
▲	3	1077083	(10000000–19999999)	Cable, 04ga 18.0l Red .41ring /.41ring	1
▲	4	223364	(10000000–19999999)	Cable, 04ga 18.0l Blk .34ring /.34ring	1
▲	5	1077084	(10000000–19999999)	Cable Assy, 8 Pos, Male To Male, 19.7l	1
▲	6	68873	(10000000–19999999)	Boot, Terminal, Battery, 02–01ga, Red	1
▲	7	1247131	(10000000–19999999)	Spacer, Battery, Foam, 2.25 X 4.8 X 10.5	1
▲	8	1252818	(10000000–19999999)	Spacer, Battery, Foam, 3.25 X 7.5 X 7	3
▲	9	83415	(10000000–19999999)	Spacer, Battery, Foam, 2.00 X 2.0 X 11.0	3
▲	10	1242643	(10000000–19999999)	Spacer, Battery, Foam, 0.75 X 3.0 X 12.5	2

Fig. 25 – Battery Charger Group

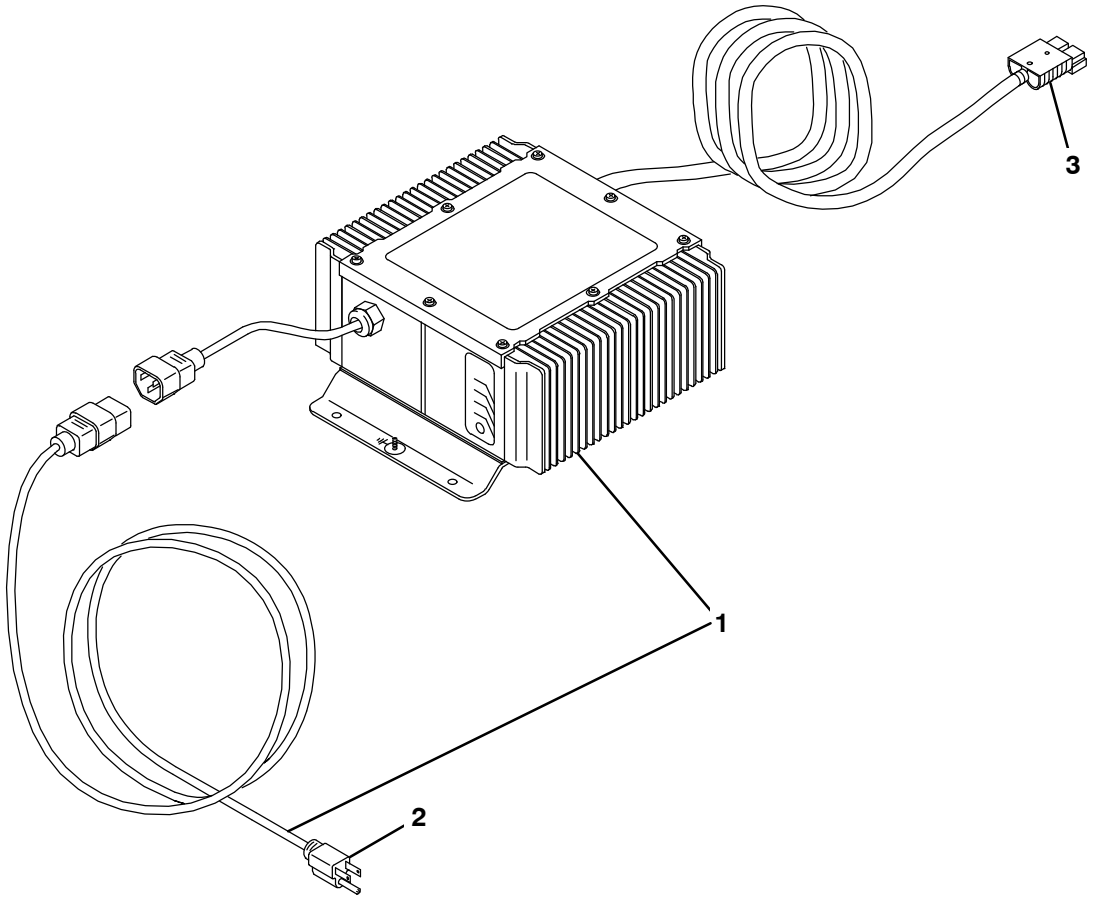

356199

	Ref.	Part No.	Serial Number	Description	Qty.
▽	1	9001055	(10000000–19999999)	Charger Kit, 36vdc 021a, 1ph,Domestic,Ci	1
▲	2	1017079	(10000000–19999999)	Cord, Extn, 16ga /3, 10ft [Sjt]	1
▲	3	130155	(10000000–19999999)	Connector, Battery, 6ga 50a, Gray[2cont]	1

Fig. 26 – Battery Charger Group

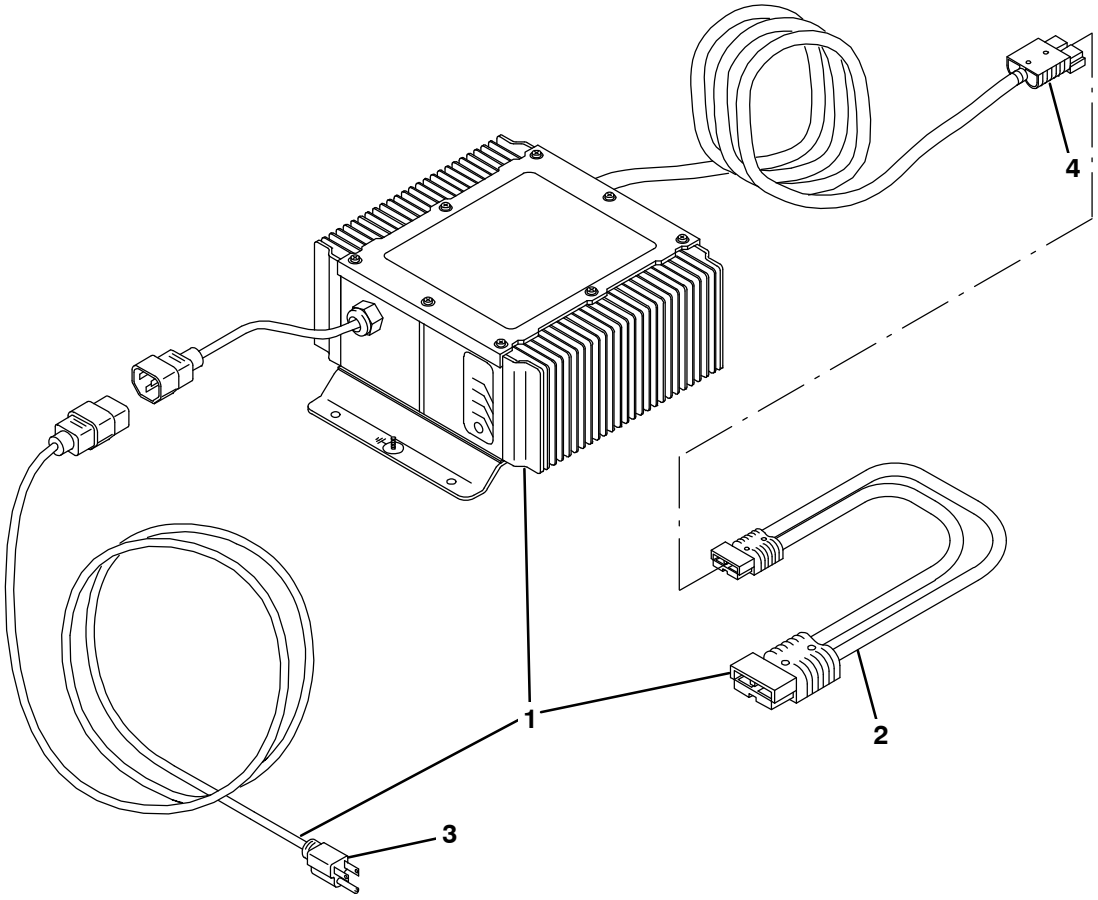

356200

	Ref.	Part No.	Serial Number	Description	Qty.
▽	1	9020990	(10000000–19999999)	Charger Kit, Re–Prog	1
▲	2	223679	(10000000–19999999)	Connector, Battery, 6ga 50a, Gray[2cont]	1
▲	3	1017079	(10000000–19999999)	Cord, Extn, 16ga /3, 10ft [Sjt]	1
▲	4	130155	(10000000–19999999)	Connector, Battery, 6ga 50a, Grayt [2cont]	1

Fig. 27 – Battery Charger Group, International Only

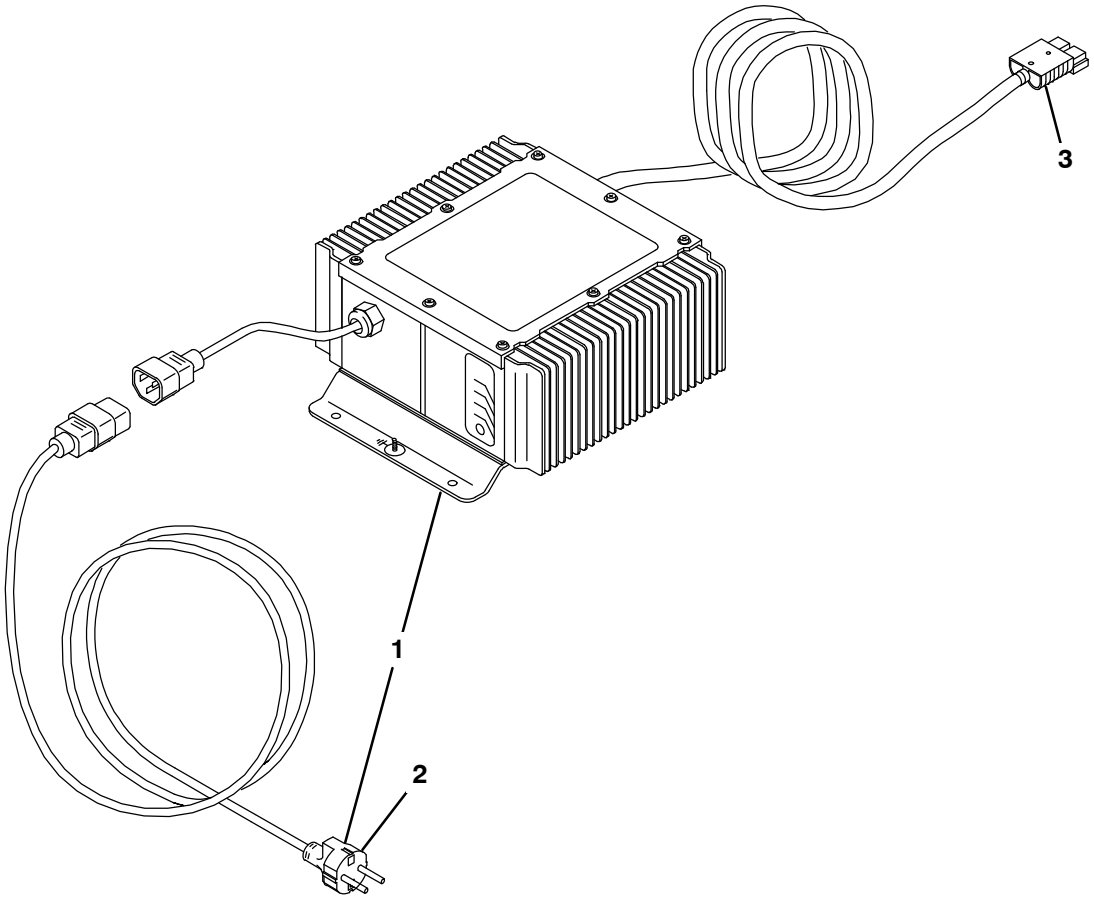

356201

	Ref.	Part No.	Serial Number	Description	Qty.
▽	1	9001062	(10000000–19999999)	Charger Kit, 36vdc 021a, 1ph, Ci	1
▲	2	1019426	(10000000–19999999)	Cord, Chrgr, Ele, [Japanese]	1
▲	3	130155	(10000000–19999999)	Connector, Battery, 6ga 50a, Gray[2cont]	1

	Ref.	Part No.	Serial Number	Description	Qty.
▽	1	9001054	(10000000–19999999)	Charger Kit, 36Vdc 21A 85–265Vac, 1Ph 45/65Hz	1
▲	2	1019242	(10000000–19999999)	Cord, Chrgr, Ele {European]	1
▲	3	130155	(10000000–19999999)	Connector, Battery, 6ga 50a, Gray[2cont]	1

Fig. 28 – Battery Charger Group

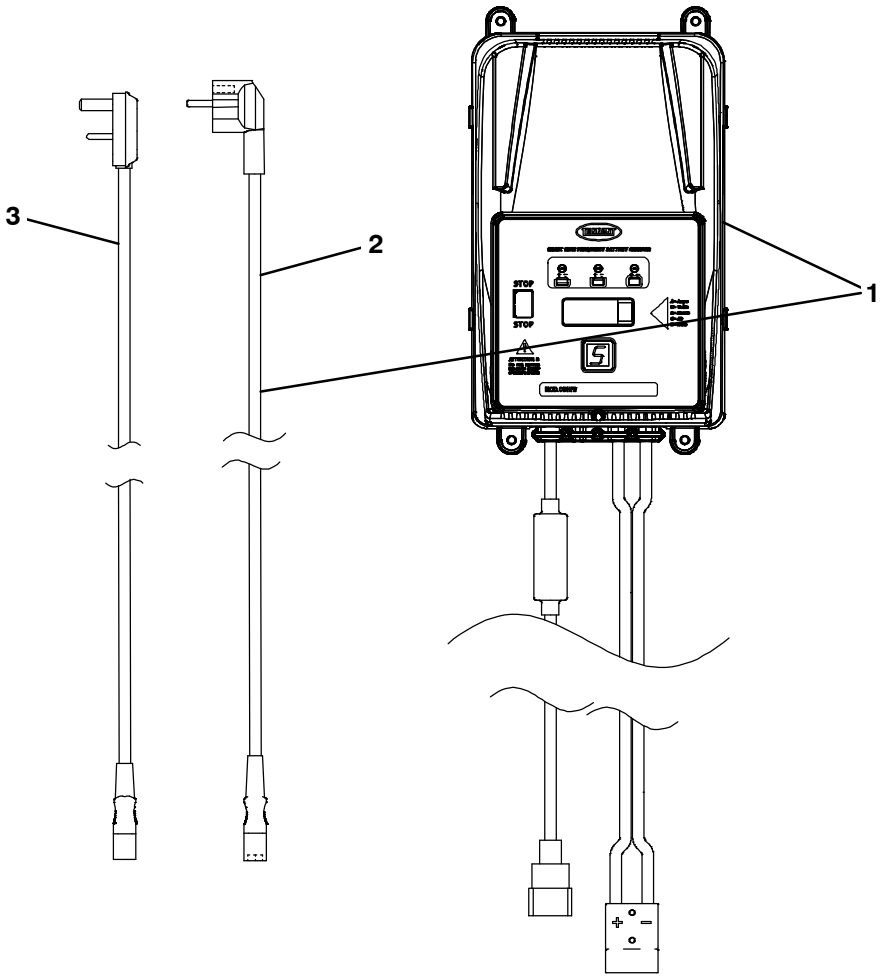

356376

	Ref.	Part No.	Serial Number	Description	Qty.
▽	1	1076685	(10000000–19999999)	Charger, 36Vdc 030A Wet Sb050G 230Vac	1
▲	2	1043746	(10000000–19999999)	Cable, Charger Eu Bc5 & 7	1
▲	3	1041716	(10000000–19999999)	Cable, Charger Uk, Bc5 & 7 (UK Only)	1

Fig. 29 – Battery Chargers Group, Lithium–Ion

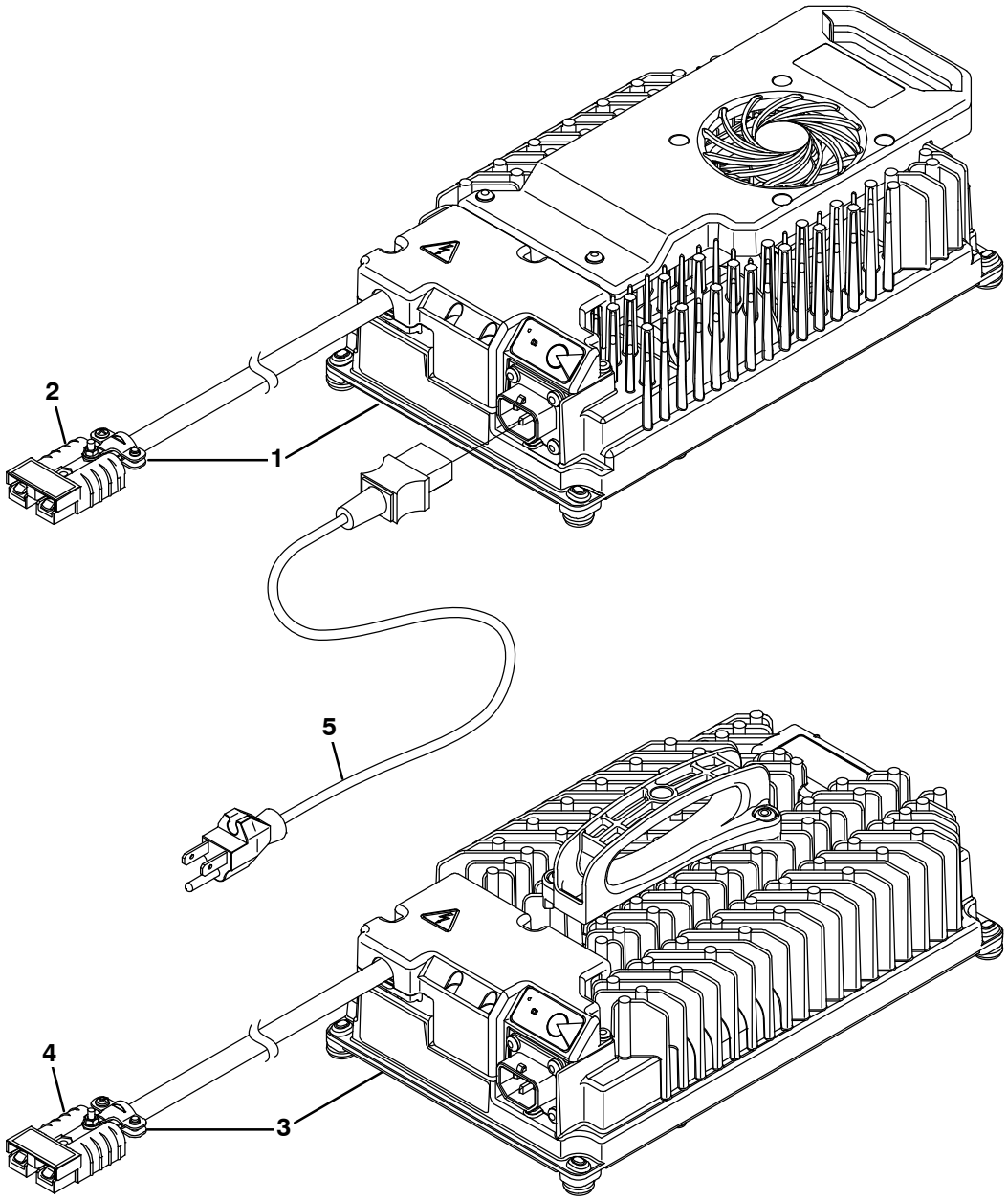

356962

Fig. 29 – Battery Chargers Group, Lithium–Ion

	Ref.	Part No.	Serial Number	Description	Qty.
▽	1	1242861	(10967791–19999999)	Charger, 36vdc 1200w 100–240vac[Off Brd]	1
▲	2	130155	(10967791–19999999)	Connector, Battery, 6ga 50a, Gray[2cont]	1
▽	3	1242864	(10967791–19999999)	Charger, 36vdc 900w 100–240vac [Off Brd]	1
▲	4	130155	(10967791–19999999)	Connector, Battery, 6ga 50a, Gray[2cont]	1
	5	1025642	(10967791–19999999)	Cord, Power, 16/3, 15ft Blk [Us]	1

Fig. 30 – On–Board Charger Kit

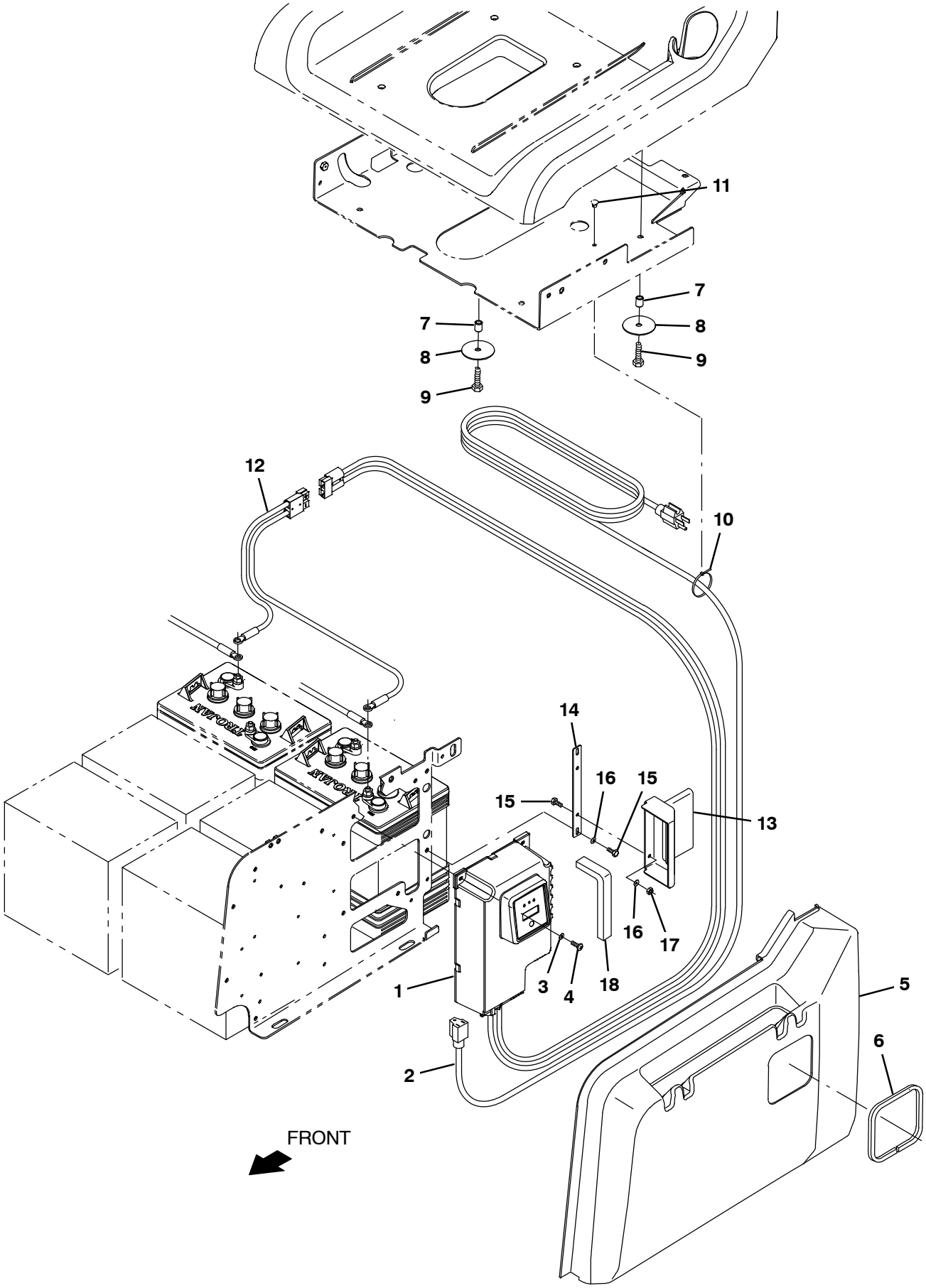

356350

Fig. 30 – On–Board Charger Kit

	Ref.	Part No.	Serial Number	Description	Qty.
▽		9009866	(10000000–19999999)	Charger Kit, On–Board, Us Ci [T12]	1
▲▽	1	9022393	(10000000–19999999)	Charger, Kit, Programmable [T12/T16]	1
▲▲		1030692	(10000000–10983212)	Fuse, 15a, Replmt (If equipped with replaceable fuse)	1
▲	2	1073882	(10000000–19999999)	Cord, Power, 14/3, 15A, 15ft Blk [Us]	1
▲	3	140011	(10000000–19999999)	Washer, Flat, 0.21b 0.45d .03, Ss	3
▲	4	06933	(10000000–19999999)	Screw, Pan, Phl, M5 X 0.80 X 16, 4.8	3
▲	5	1201501	(10000000–19999999)	Cover, Access, Chrgr, Trimmed	1
▲	6	1020170	(10000000–19999999)	Molding, Afmkt, Trim, Pvc, .08 .11, 02ft	1
▲	7	80395	(10000000–19999999)	Sleeve, P/M, 0.32b 0.50d 0.7l [430ss]	2
▲	8	373117	(10000000–19999999)	Washer, Flat, 0.38b 2.25d .07, Stl, Pnt	2
▲	9	09011	(10000000–19999999)	Screw, Hex, M8 X 1.25 X 30, Ss	2
▲	10	763115	(10000000–19999999)	Tie, Cable, 6.0l, 1.25d Max	1
▲	11	1202868	(10000000–19999999)	Clip, Tie, 0.25d, Plstc	1
▲	12	1070508	(10000000–19999999)	Cable Assy, 6ga [6100e – Telemetry]	1
▲	13	1206036	(10000000–19999999)	Duct, Outlet, Heat	1
▲	14	1206052	(10000000–19999999)	Plate, Mtg, Heat Duct	1
▲	15	09738	(10000000–19999999)	Screw, Hex, M5 X 0.80 X 12, Ss	4
▲	16	140011	(10000000–19999999)	Washer, Flat, 0.21b 0.45d .03, Ss	4
▲	17	09739	(10000000–19999999)	Nut, Hex, Lock, M5 X 0.80, Nl, Ss	2
▲	18	1206096	(10000000–19999999)	Seal, Foam, 0.50 0.75w 8.0l, Pvc, Adh	1

Fig. 31 – On–Board Charger Group, International

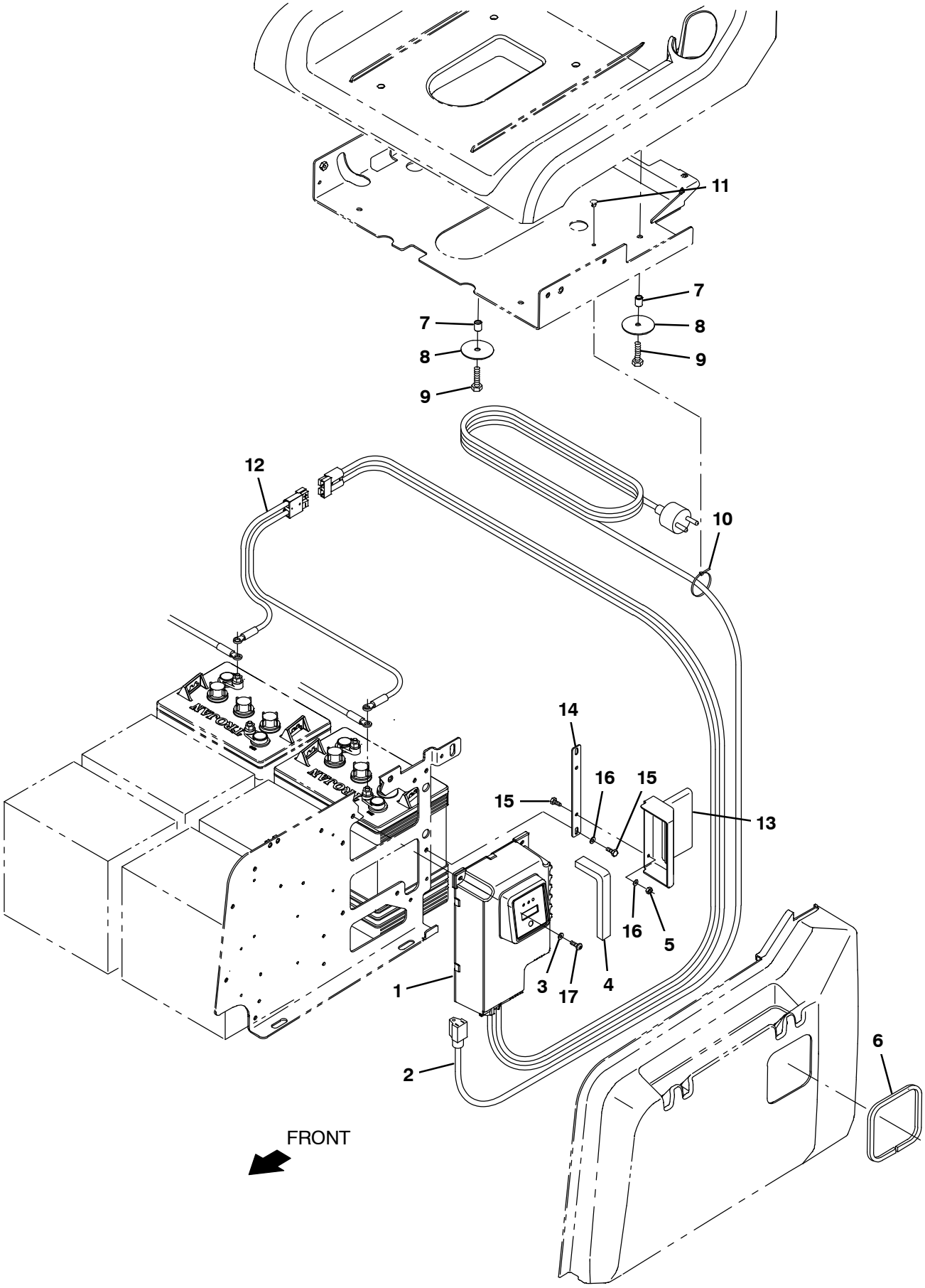

356353

Fig. 31 – On–Board Charger Group, International

	Ref.	Part No.	Serial Number	Description	Qty.
▽	1	9022393	(10000000–19999999)	Charger, Kit, Programmable [T12/T16]	1
▲		1030692	(10000000–10983212)	Fuse, 15a, Replmt (If equipped with replaceable fuse)	1
	2	1019242	(10000000–19999999)	Cord, Chrgr, Ele [European]	1
	2	1026325	(10000000–19999999)	Cord, Power, 1.0mm2/3 Blk[2.5Meter, Australia]	1
	3	140011	(10000000–19999999)	Washer, Flat, 0.21b 0.45d .03, Ss	3
	4	1206096	(10000000–19999999)	Seal, Foam, 0.50 0.75w 8.0l, Pvc, Adh	1
	5	09739	(10000000–19999999)	Nut, Hex, Lock, M5 X 0.80, Nl, Ss	2
	6	1020170	(10000000–19999999)	Molding, Afmkt, Trim, Pvc, .08 .11, 02ft	1
	7	80395	(10000000–19999999)	Sleeve, P/M, 0.32b 0.50d 0.7l [430ss]	2
	8	373117	(10000000–19999999)	Washer, Flat, 0.38b 2.25d .07, Stl, Pnt	2
	9	09011	(10000000–19999999)	Screw, Hex, M8 X 1.25 X 30, Ss	2
	10	763115	(10000000–19999999)	Tie, Cable, 6.0l, 1.25d Max	1
	11	1202868	(10000000–19999999)	Clip, Tie, 0.25d, Plstc	1
	12	1070508	(10000000–19999999)	Cable Assy, 6ga [6100e – Telemetry]	1
	13	1206036	(10000000–19999999)	Duct, Outlet, Heat	1
	14	1206052	(10000000–19999999)	Plate, Mtg, Heat Duct	1
	15	09738	(10000000–19999999)	Screw, Hex, M5 X 0.80 X 12, Ss	4
	16	140011	(10000000–19999999)	Washer, Flat, 0.21b 0.45d .03, Ss	4
	17	06933	(10000000–19999999)	Screw, Pan, Phl, M5 X 0.80 X 16, 4.8	3

Fig. 32 – Flow–Rite™ Battery Water Manifold Kit

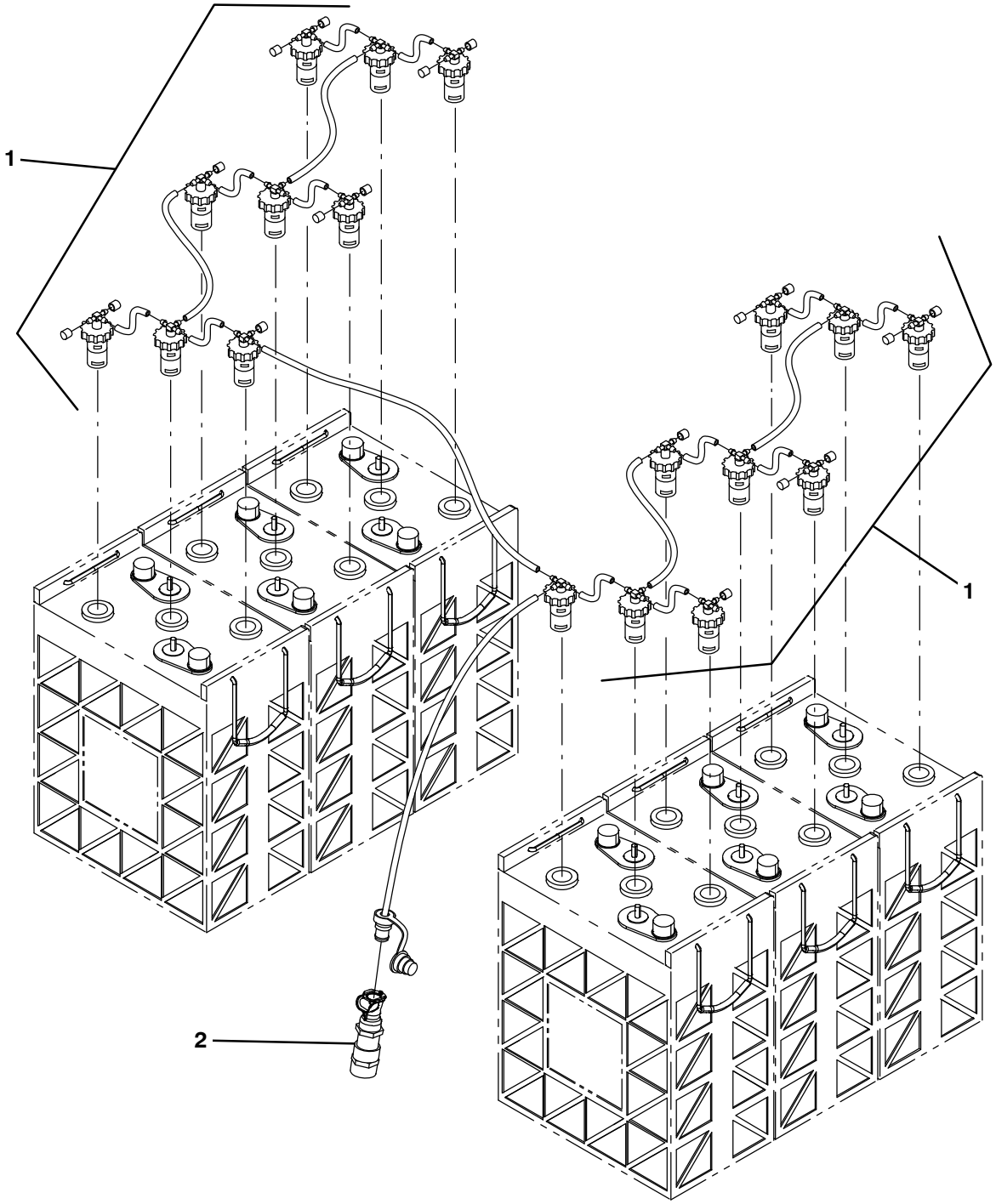

356352

	Ref.	Part No.	Serial Number	Description	Qty.
▽		9009870	(10000000–19999999)	Manifold Kit, Sys, Water, Battery, Di (Replaced by 9045074)	1
▲	1	1060756	(10000000–19999999)	Manifold, Sys, Water, Battery	1
▲	2	1061926	(10000000–19999999)	Valve, Reg, Water	1

Flow-Rite is a registered trademark of Flow-Rite Controls

Fig. 33 – Hydrolink® Battery Watering System Kit

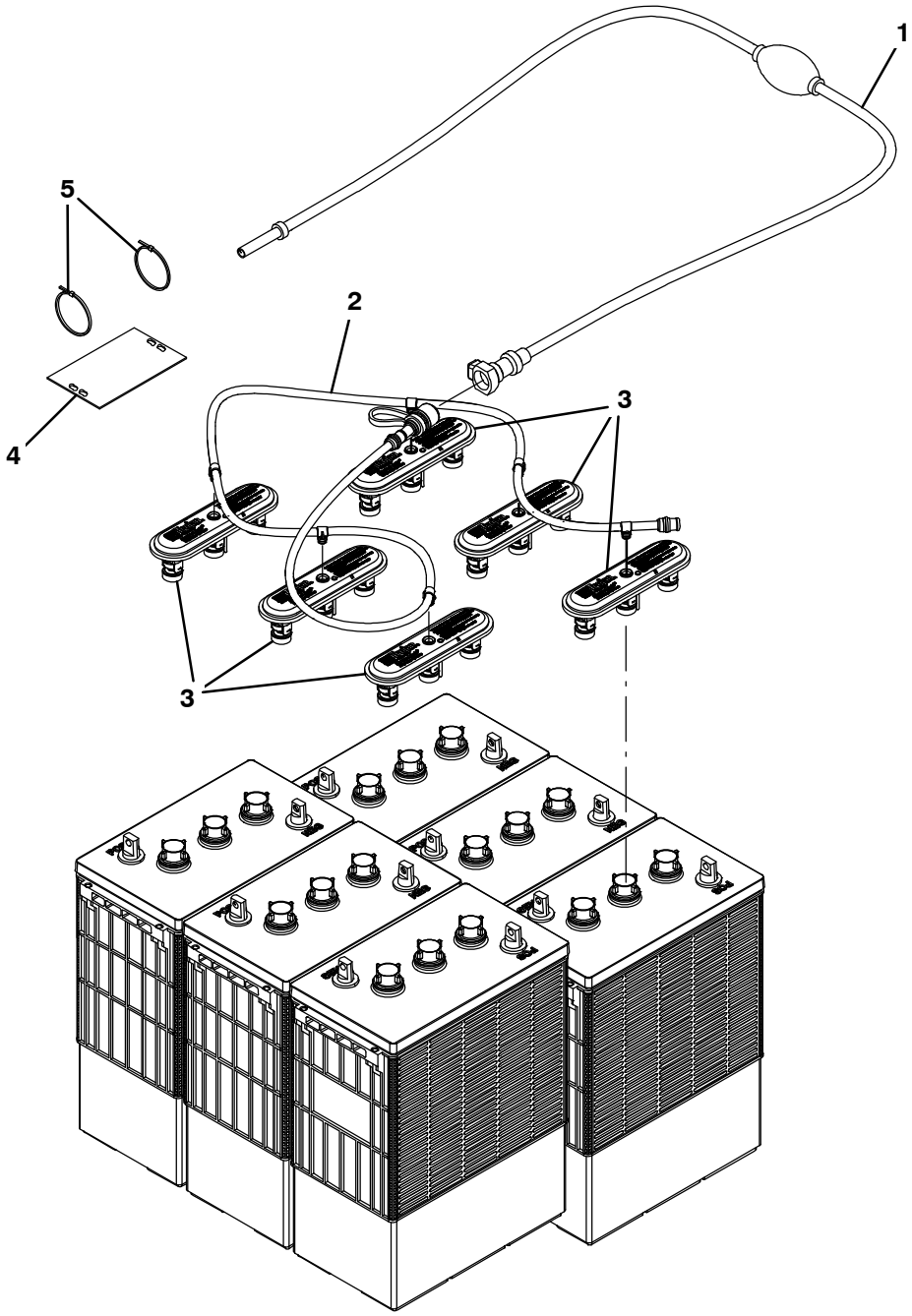

355205

	Ref.	Part No.	Serial Number	Description	Qty.
∇		9010301*	(10000000–19999999)	Pump Kit, Fill, Battery,36vdc,Ci[Trojan] (Replaced by 9045074)	1
▲	1	1058939	(10000000–19999999)	Pump Kit, Fill, Battery	1
▲	2	1201997	(10000000–19999999)	Tube, Water, Battery, 36vdc [Trojan]	1
▲	3	1204142	(10000000–19999999)	Cap, Fill, Battery [Trojan]	6
▲	4	1071084	(10000000–19999999)	Label, Tag, Battery [Hydrolink Watering]	1
▲	5	130773	(10000000–19999999)	Tie, Cable, Nyl, 11.0l, .14w, 3.0 Max. D	2

***This kit is intended for use with Trojan® Lead Acid Batteries Only.**

Hydrolink® is a registered trademark of Trojan® Battery Company.

Fig. 34 – Manual Battery Watering System Kit

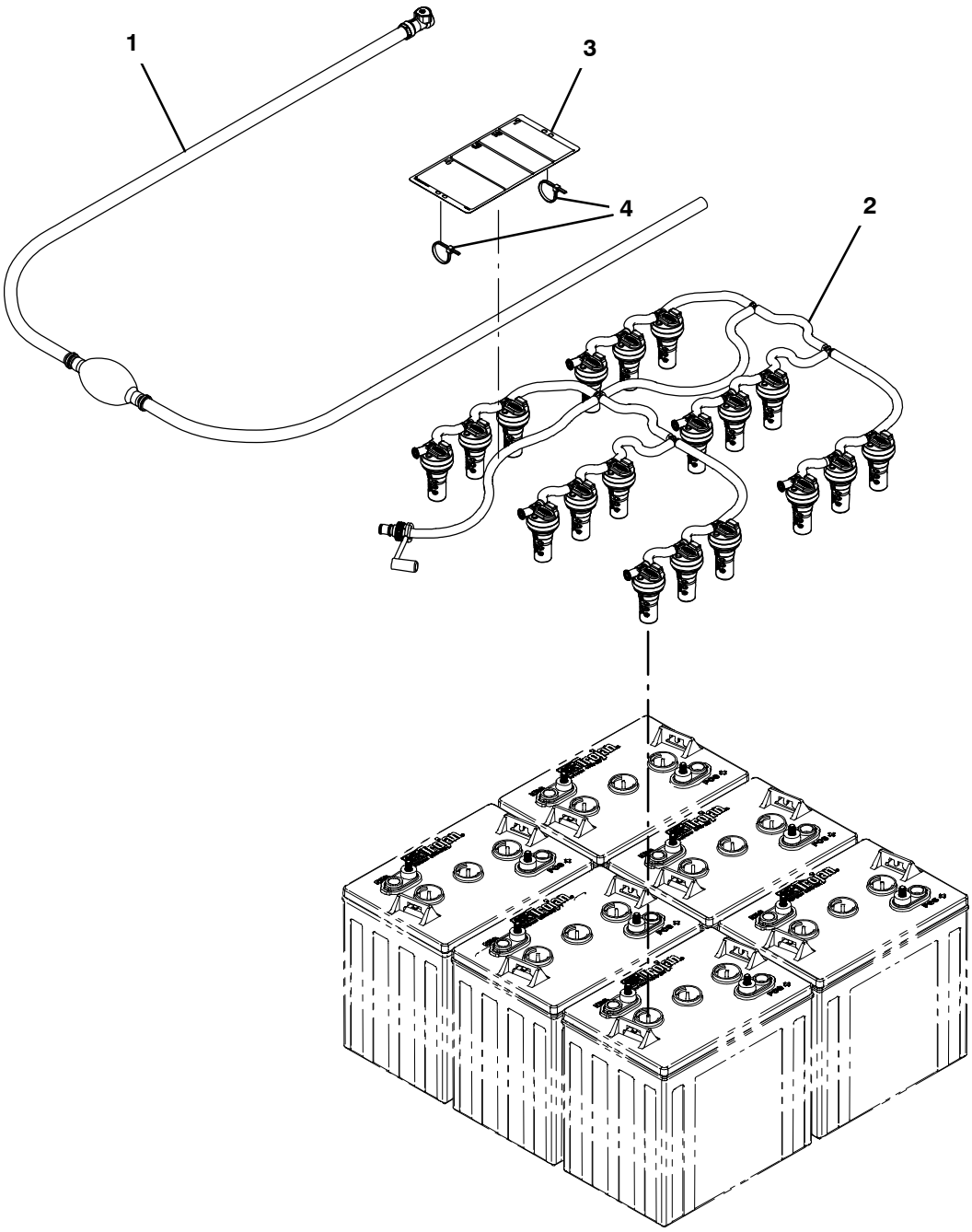

357139

	Ref.	Part No.	Serial Number	Description	Qty.
∇		9045074*	(10000000–19999999)	Fill Kit, 6 Btry, Mnl, Ci [Trojan]	1
▲	1	1236295	(10000000–19999999)	Pump, Hand, Battery	1
▲	2	1248178	(10000000–19999999)	Distribution Assy, Water, Battery	1
▲	3	1253250	(10000000–19999999)	Label, Tag, Battery [Bwt Watering]	1
▲	4	130773	(10000000–19999999)	Tie, Cable, nyl, 11.0L, .14W, 3.0Max. D	2

*This kit is intended for use with Trojan® Lead Acid Batteries Only.

Fig. 35 – Transport Group

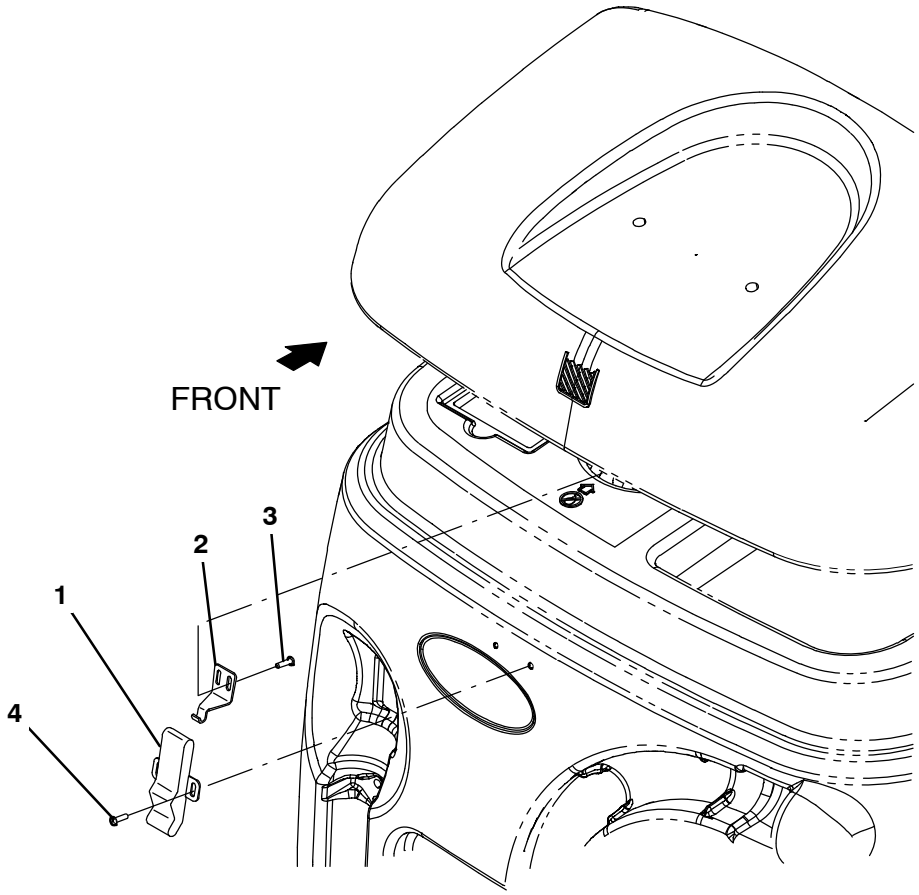

356355

Ref.	Part No.	Serial Number	Description	Qty.
1	140932	(10000000–19999999)	Latch, Draw, Rbr, W/ Keeper, Fr/49800	1
2	1205666	(10000000–19999999)	Bracket, Catch, Latch	1
3	360973	(10000000–19999999)	Screw, Pan, 12–16 X 0.50, F/ Plstc	2
4	140825	(10000000–19999999)	Screw, Pan, Phl, 06 X 0.50, Fmg/Ab, Blk	2

Fig. 36 – Fire Extinguisher Group

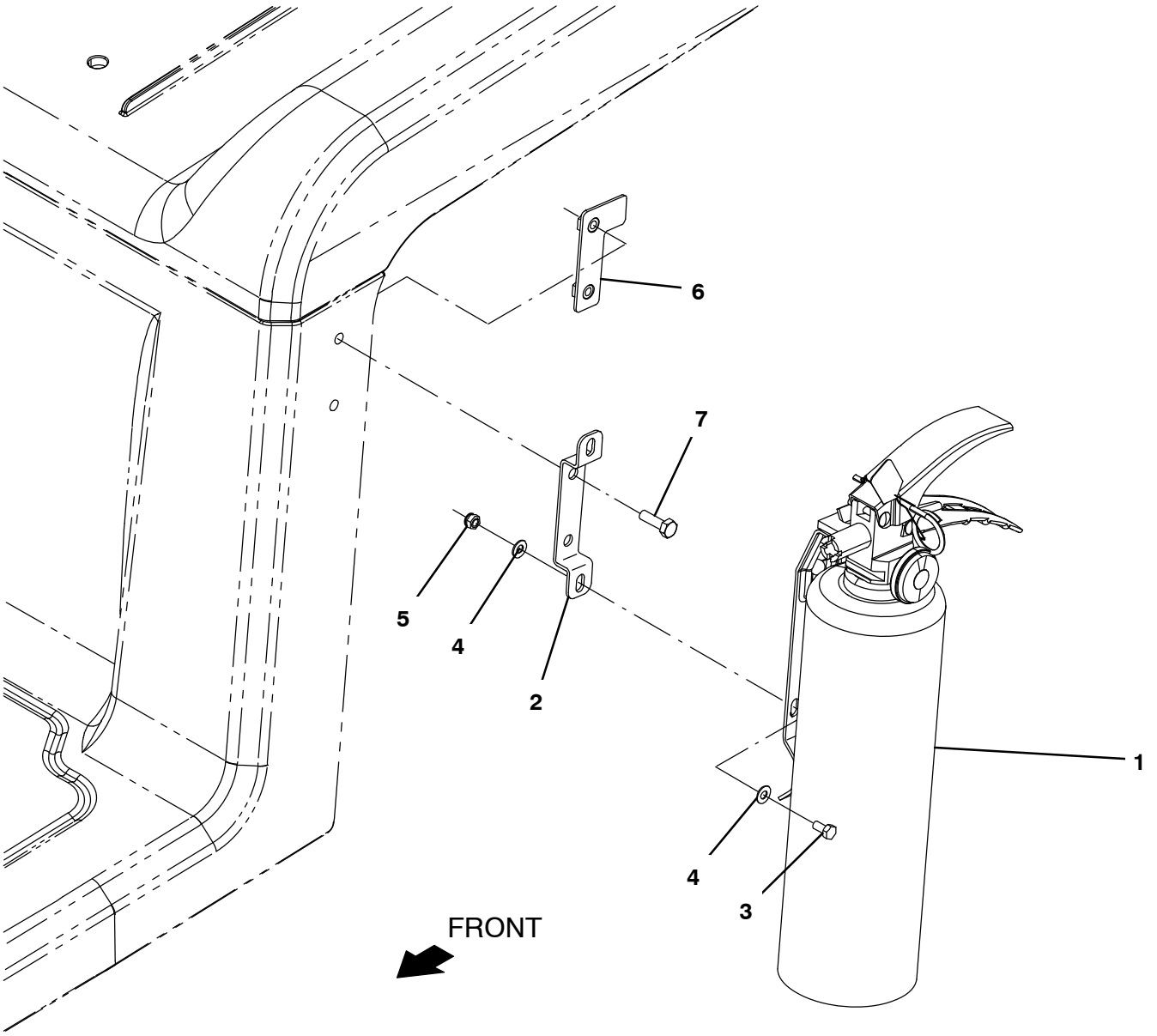

356351

Ref.	Part No.	Serial Number	Description	Qty.
1	25312	(10000000–19999999)	Extinguisher, Fire, 2.5 Lb Dry	1
2	1205877	(10000000–19999999)	Bracket, Mtg, Extinguisher	1
3	09738	(10000000–19999999)	Screw, Hex, M5 X 0.80 X 12, Ss	2
4	140011	(10000000–19999999)	Washer, Flat, 0.21b 0.45d .03, Ss	4
5	09739	(10000000–19999999)	Nut, Hex, Lock, M5 X 0.80, Nl, Ss	2
6	1205889	(10000000–19999999)	Plate Wldt, Mtg, Extinguisher	1
7	08716	(10000000–19999999)	Screw, Hex, M6 X 1.00 X 20, Ss	2

Fig. 37 – Documentation Group (Available Online Only)

Ref.	Part No.	Serial Number	Description	Qty.
	9009910	(10000000–19999999)	Manual, Oprtr [T12 Ele, En, Na]	1
	9009911	(10000000–19999999)	Manual, Oprtr [T12 Ele, Es, Na]	1
	9009912	(10000000–19999999)	Manual, Oprtr [T12 Ele, Fr, Na]	1
	9009913	(10000000–19999999)	Manual, Oprtr [T12 Ele, Ptb]	1
	9009914	(10000000–19999999)	Manual, Oprtr [T12 Ele, Jp]	1
	9009915	(10000000–19999999)	Manual, Oprtr [T12 Ele, Cn]	1
	9009916	(10000000–19999999)	Manual, Parts [T12 Ele, En, Na/Int] (S/N 1000000–1999999)	1
	9012729	(30000000–39999999)	Manual, Parts [T12 Ele, EN] (S/N 3000000–3999999)	1
	9009917	(10000000–19999999)	Manual, Service Info [T12 Ele, En]	1
	9009890	(10000000–19999999)	Dvd, Operator [T12]	1
	9011140	(10000000–19999999)	Instr, Use&Care, Wallchart [T12]	1

To view, print, order, download the latest Parts manual, other language Operator manuals, and Use and Care Guides (wall charts) visit:

www.tennantco.com/manual

SECTION 4

Contents **Page**

Fig. 1 – ec–H2O Module Assembly Breakdown, 9010933 4-2
Fig. 2 – Steering Control Breakdown, 1200203 . . 4-4
Fig. 3 – Steering Control Breakdown, 1256309 . . 4-5
Fig. 4 – Drive Wheel Breakdown, 1246662 4-6
Fig. 5 – Drive Wheel Breakdown, 1255933 4-7
Fig. 6 – Electric Motor Breakdown, 1053342 4-8
Fig. 7 – Accelerator and Brake Pedal Assembly Breakdown, 1200253 4-9

Fig. 1 – ec–H2O Module Assembly Breakdown, 9010933

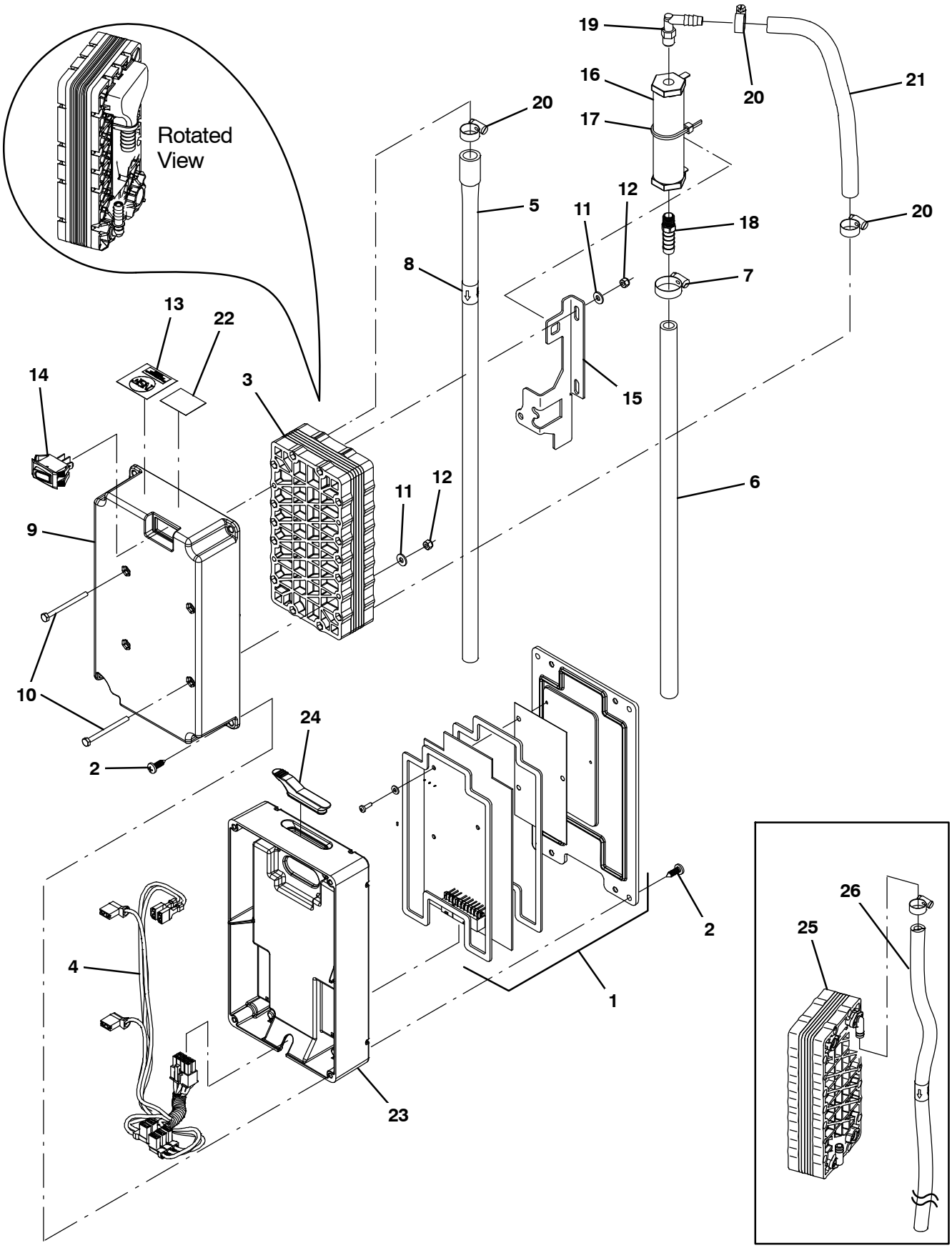

356514

Fig. 1 – ec–H2O Module Assembly Breakdown, 9010933

	Ref.	Part No.	Serial Number	Description	Qty.
▽		9010933	(10000000–19999999)	Ec–H2o Module Kit, Afmkt [T12]	1
▲	1	9020262	(10000000–19999999)	Circuit Board Kit, Ec–H2o, Afmkt [T12]	1
▲	2	1018155	(10000000–19999999)	Screw, Pan, Phl, M5 X 0.80 X 16, Tcut,Ss	8
▲	3	1233516	(10994329–19999999)	Electrode, 5 Plate, [De Nora Tech]	1
▲	4	1069708	(10000000–19999999)	Harness, Ele, Ech2o [T12 Module]	1
▲	5	1243570	(10994329–19999999)	Hose , Molded, Bm08/Bm05	1
▲	6	1014971	(10000000–19999999)	Hose, Afmkt, Pvc, Brd, 01Ft, Clr	1
▲	7	54333	(10000000–19999999)	Clamp, Hose, Wormdrive, 0.31–0.88d, .31w	1
▲	8	1049637	(10000000–19999999)	Label, Direction [Ec–H2o]	1
▲	9	1051519	(10000000–19999999)	Housing, Upper, Module, High Flow	1
▲	10	32509	(10000000–19999999)	Screw, Hex, M4 X 0.70 X 50, Ss	4
▲	11	41579	(10000000–19999999)	Washer, Flat, 08, Ss	4
▲	12	33932	(10000000–19999999)	Nut, Hex, Lock, M4 X 0.70, Nl, Ss	4
▲	13	1046041	(10000000–19999999)	Label, Module [Nsf, Ec–H2o]	1
▲	14	1044393	(10000000–19999999)	Switch, Rocker, Spst, Mom	1
▲	15	1048741	(10000000–19999999)	Bracket, Valve, Large	1
▲	16	1062006	(10000000–19999999)	Electrode, Cylindrical	1
▲	17	130773	(10000000–19999999)	Tie, Cable, Nyl, 11.0l, .14w, 3.0 Max. D	1
▲	18	1055552	(10000000–19999999)	Fitting, Brs, Str, Bm06/Pm02	1
▲	19	1051268	(10000000–19999999)	Fitting, Plstc, E90, Bm05/Pm02, Nyl	1
▲	20	43844	(10000000–19999999)	Clamp, Hose, Wormdrive, 0.25–0.62d, .31w	3
▲	21	1014971	(10000000–19999999)	Hose, Afmkt, Pvc, Brd, 01Ft, Clr	1
▲	22	1068763	(10000000–19999999)	Label, Date Code [Ec–H2o]	1
▲	23	1037032	(10000000–19999999)	Housing, Bottom	1
▲	24	1054776	(10000000–19999999)	Grommet, Blind	1
	25	9018397	(10000000–10994328)	Electrode Kit, 5 Plate, Hi Flow, Replmt	1
	26	9006268	(10000000–10994328)	Hose, Pvc, Brd, 0.38id, 01Ft, Clr	1

Fig. 2 – Steering Control Breakdown, 1200203

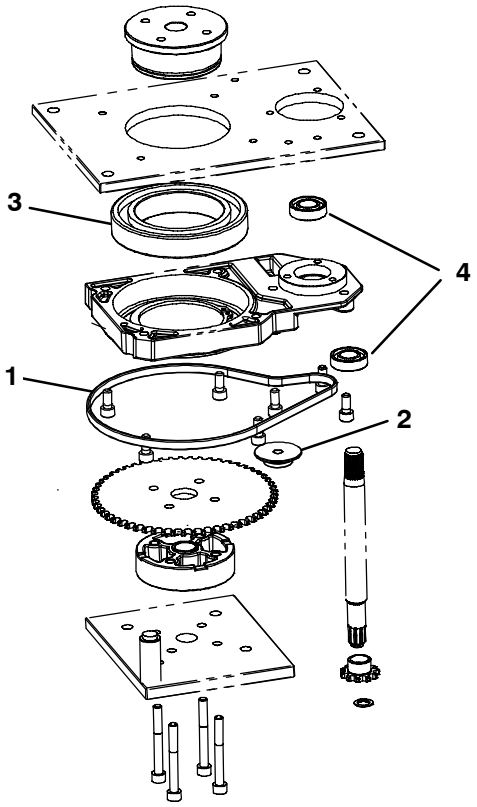

356361

	Ref.	Part No.	Serial Number	Description	Qty.
▽		1200203	(10000000–11017501)	Steer–Control Assy, Wheel Drive	1
▲	1	9011049	(10000000–11017501)	Chain, Steering W/Link	1
▲	2	9011051	(10000000–11017501)	Pulley, Tension	1
▲	3	372874	(10000000–11017501)	Bearing, Steering	1
▲	4	9008719	(10000000–11017501)	Bearing [6003 2RS]	2

Fig. 3 – Steering Control Breakdown, 1256309

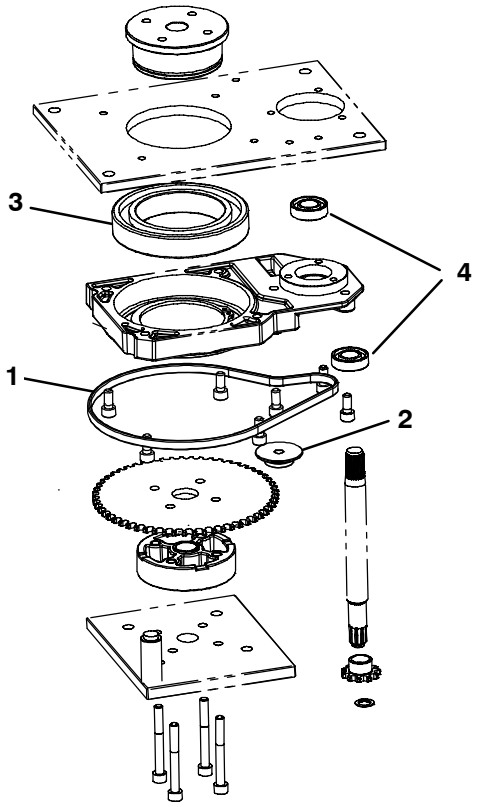

356361

	Ref.	Part No.	Serial Number	Description	Qty.
▽		1256309	(11017502–19999999)	Steer–Control Assy, Wheel Drive	1
▲	1	9011049	(11017502–19999999)	Chain, Steering W/Link	1
▲	2	9011051	(11017502–19999999)	Pulley, Tension	1
▲	3	372874	(11017502–19999999)	Bearing, Steering	1
▲	4	9008719	(11017502–19999999)	Bearing [6003 2RS]	2

Fig. 4 – Drive Wheel Breakdown, 1246662

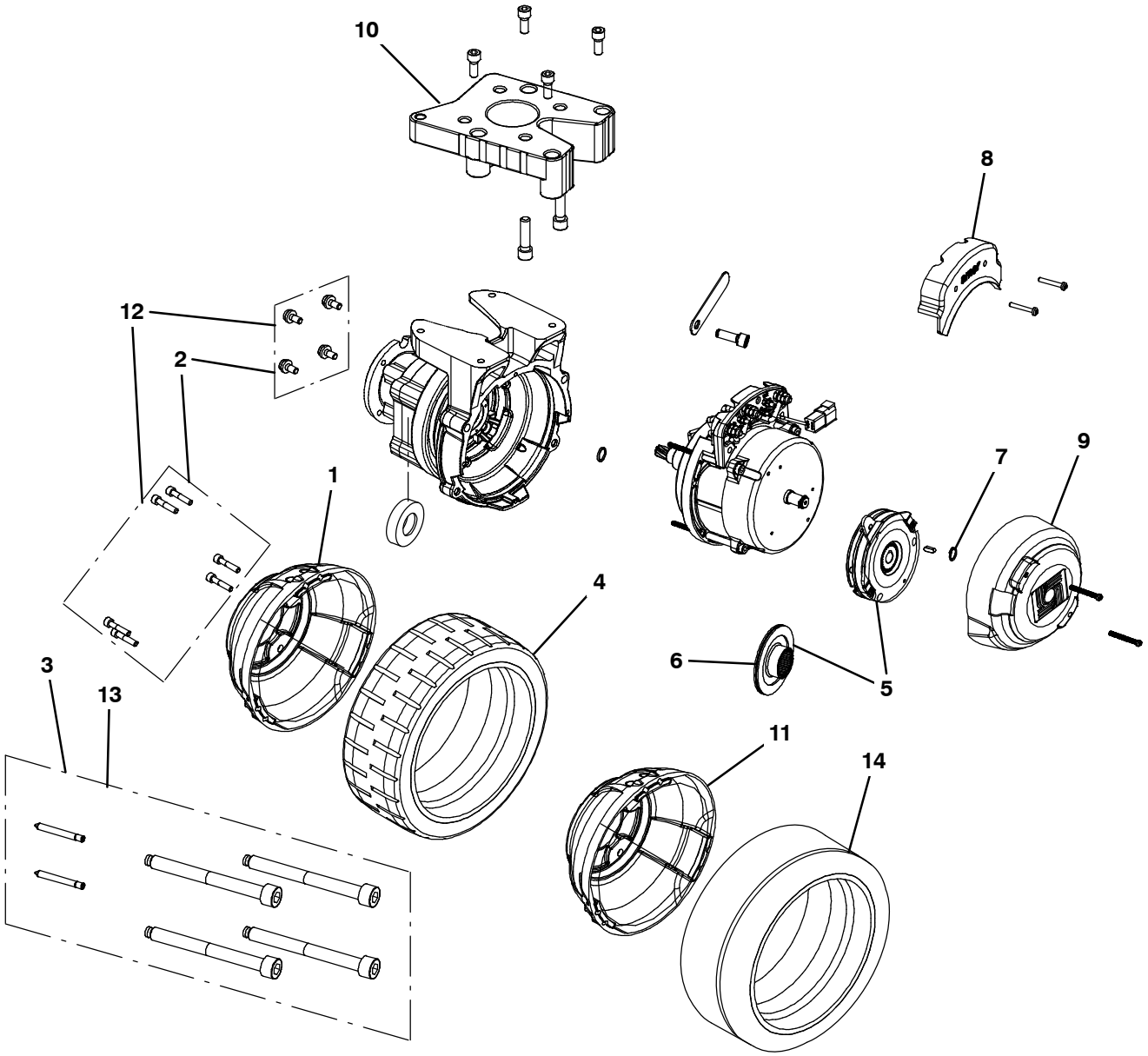

356940

Fig. 4 – Drive Wheel Breakdown, 1246662

	Ref.	Part No.	Serial Number	Description	Qty.
▽		1246662	(10956762–11025471)	Wheel, Drive, Ac	1
▲▽		9020686	(10956762–11025471)	Wheel And Hub Kit, Red [T12]	1
▲▲	1	9020657	(10956762–11025471)	Hub, Alm	1
▲▲	2	9020658	(10956762–11025471)	Screw Kit	1
▲▲	3	9008544	(10956762–11025471)	Tire Kit, Puller	1
▲▲	4	9011048	(10956762–11025471)	Wheel, Pyu [250X90 Red]	1
▲▽	5	9020688	(10956762–11025471)	Brake Kit, Complt [T12/T16]	1
▲▲	6	9020689	(10956762–11025471)	Brake Kit, Rotor [T12/T16]	1
▲	7	9008556	(10956762–11025471)	Ring, Retaining F/1055257	1
▲	8	9008550	(10956762–11025471)	Cover, Box, Connector	1
▲	9	9013901	(10956762–11025471)	Cover, Motor, Drive	1
▲	10	9008552	(10956762–11025471)	Spacer, Alm	1
▽		9020685	(10956762–11025471)	Wheel And Hub Kit, Blue [T12]	1
▲	11	9020657	(10956762–11025471)	Hub, Alm	1
▲	12	9020658	(10956762–11025471)	Screw Kit	1
▲	13	9008544	(10956762–11025471)	Tire Kit, Puller	1
▲	14	9011048	(10956762–11025471)	Wheel, Pyu [250X90 Red]	1

Fig. 5 – Drive Wheel Breakdown, 1255933

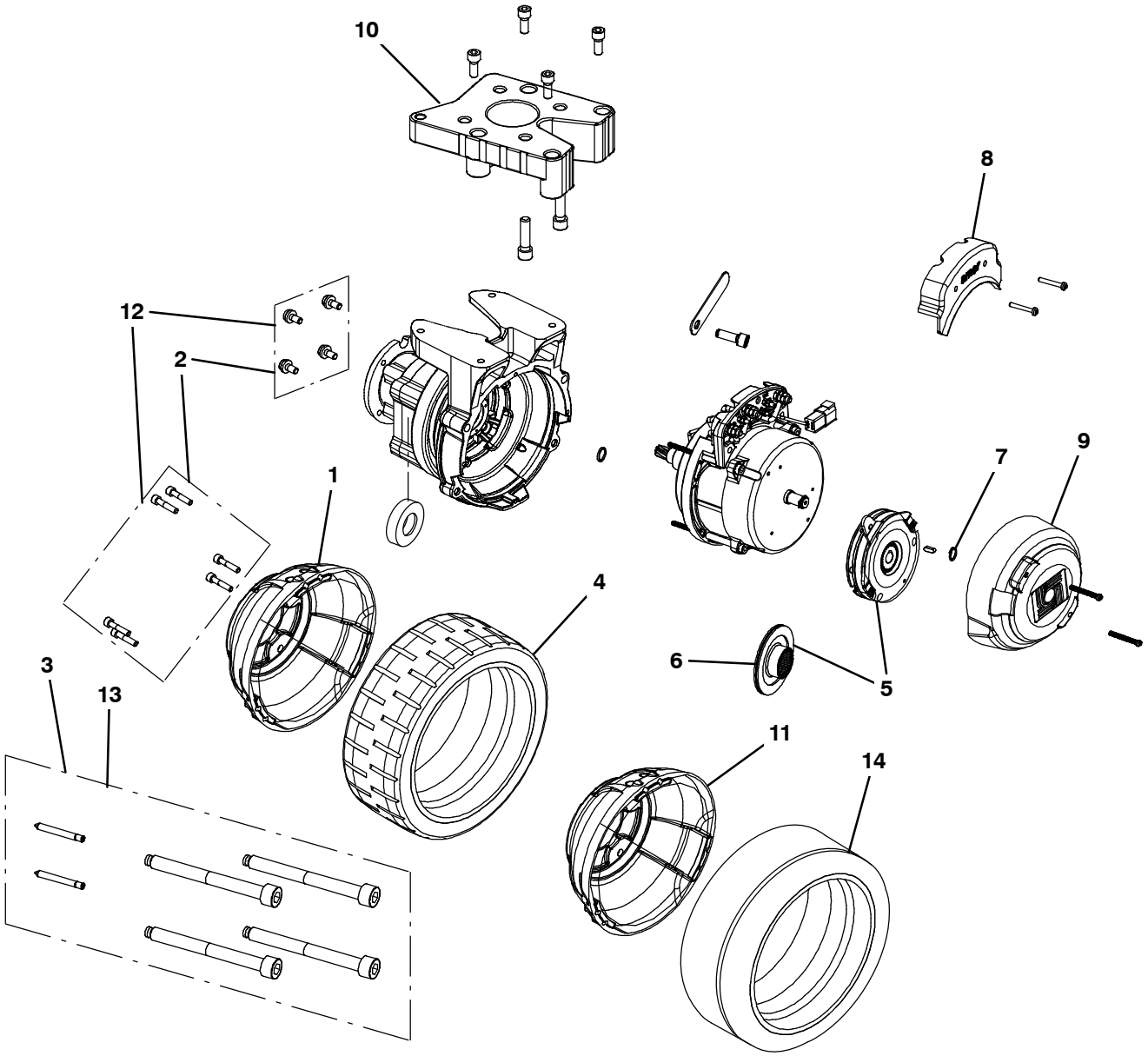

356940

Fig. 5 – Drive Wheel Breakdown, 1255933

	Ref.	Part No.	Serial Number	Description	Qty.
▽		1255933	(11025472–19999999)	Wheel, Drive, Ac	1
▲▽		9020686	(11025472–19999999)	Wheel And Hub Kit, Red [T12]	1
▲▲	1	9020657	(11025472–19999999)	Hub, Alm	1
▲▲	2	9020658	(11025472–19999999)	Screw Kit	1
▲▲	3	9008544	(11025472–19999999)	Tire Kit, Puller	1
▲▲	4	9011048	(11025472–19999999)	Wheel, Pyu [250X90 Red]	1
▲▽	5	9020688	(11025472–19999999)	Brake Kit, Complt [T12/T16]	1
▲▲	6	9020689	(11025472–19999999)	Brake Kit, Rotor [T12/T16]	1
▲	7	9008556	(11025472–19999999)	Ring, Retaining F/1055257	1
▲	8	9008550	(11025472–19999999)	Cover, Box, Connector	1
▲	9	9013901	(11025472–19999999)	Cover, Motor, Drive	1
▲	10	9008552	(11025472–19999999)	Spacer, Alm	1
▽		9020685	(11025472–19999999)	Wheel And Hub Kit, Blue [T12]	1
▲	11	9020657	(11025472–19999999)	Hub, Alm	1
▲	12	9020658	(11025472–19999999)	Screw Kit	1
▲	13	9008544	(11025472–19999999)	Tire Kit, Puller	1
▲	14	9011048	(11025472–19999999)	Wheel, Pyu [250X90 Red]	1

Fig. 6 – Electric Motor Breakdown, 1053342

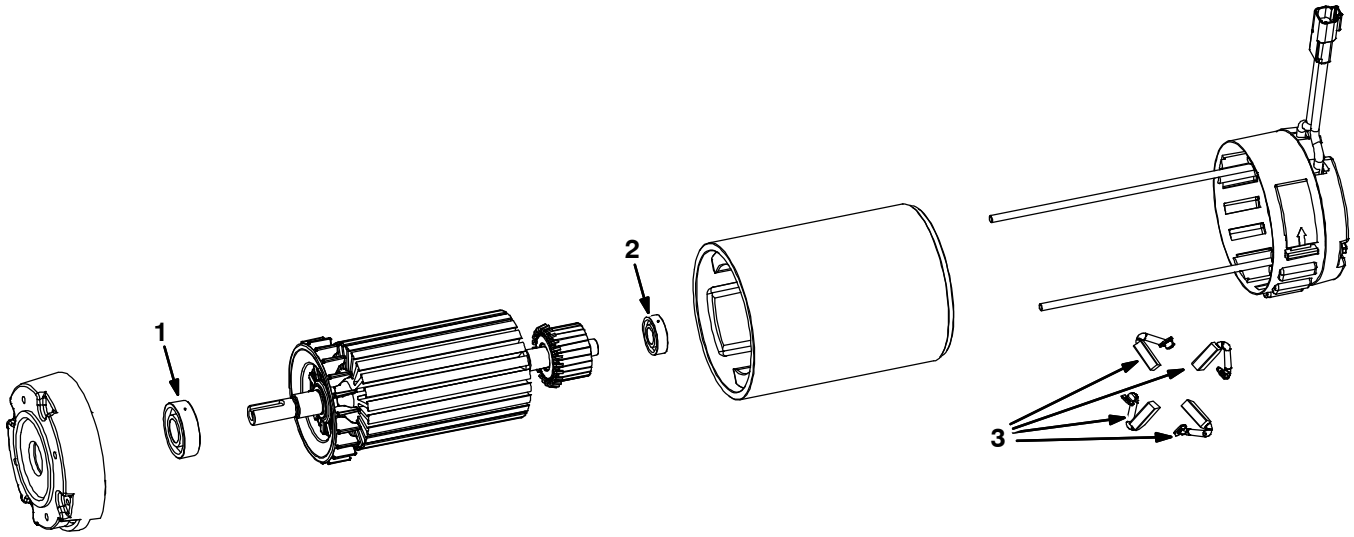

	Ref.	Part No.	Serial Number	Description	Qty.
▽		1053342	(10000000–19999999)	Motor, ele, 36Vdc 1750rpm 1.00hp 22.0a	1
▲	1	9013931	(10000000–19999999)	Bearing, Motor, Ele	2
▲	2	9013934	(10000000–19999999)	Bearing, Motor, Ele	2
▲	3	9011916	(10000000–19999999)	Brush Kit, Motor	1

Fig. 7 – Accelerator and Brake Pedal Assembly Breakdown, 1200253

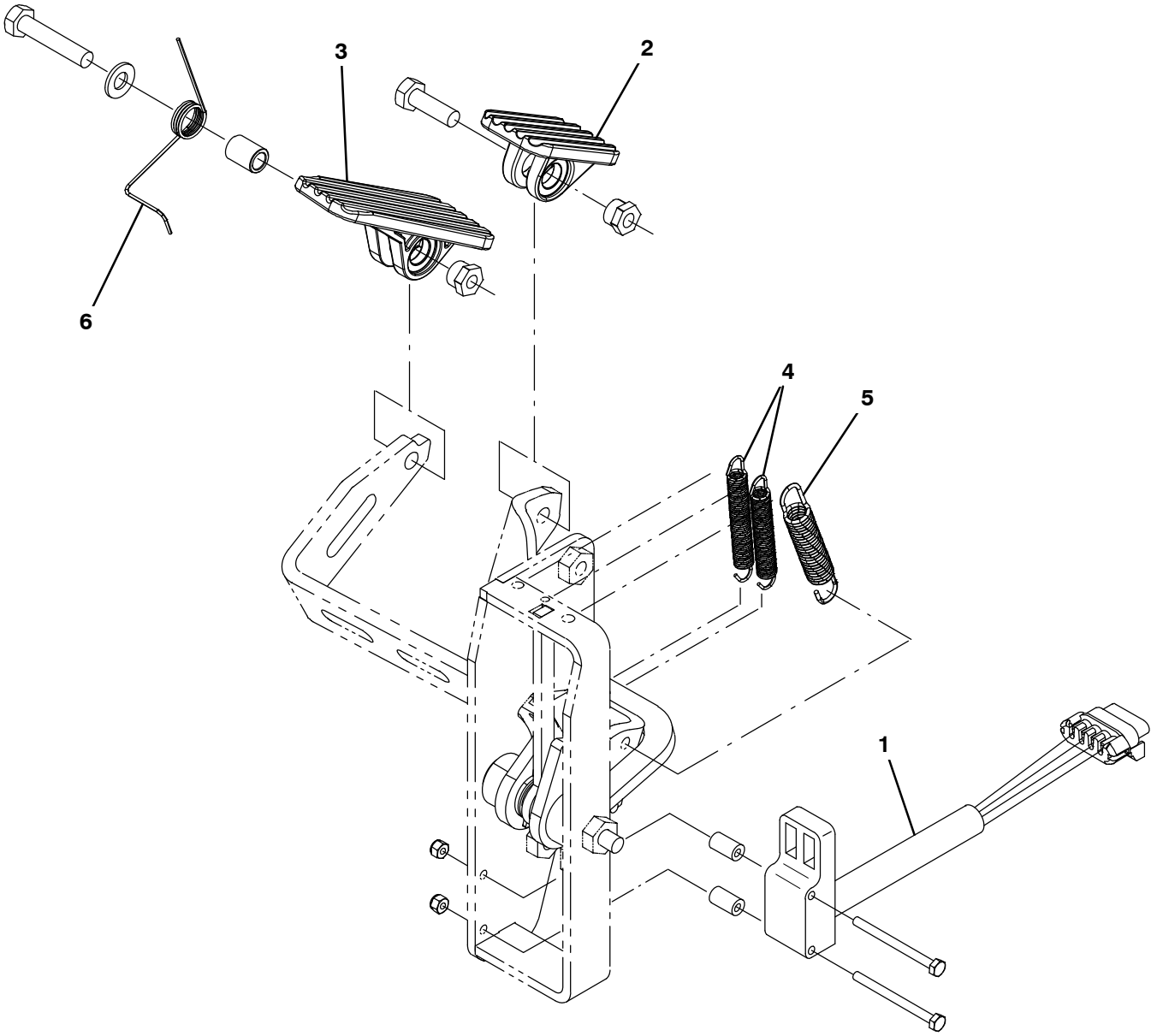

	Ref.	Part No.	Serial Number	Description	Qty.
▽		1200253	(10000000–19999999)	Pedal Assy, Accelerator, Brake	1
▲	1	1058687	(10000000–19999999)	Sensor, Position [Hall]	1
▲	2	1014548	(10000000–19999999)	Pedal, Brake, W/ Tread	1
▲	3	1051836	(10000000–19999999)	Pedal, Propel, W/ Tread	1
▲	4	1061049	(10000000–19999999)	Spring, Extn, 0.35od 0.05wir 02.8l	2
▲	5	1031716	(10000000–19999999)	Spring, Extn, 0.50od 0.07wir 03.0l	1
▲	6	1064665	(10000000–19999999)	Spring, Tors, 0.55id .05wir 04.0coil	1