S16
(Battery)

Rider Sweeper Parts Manual

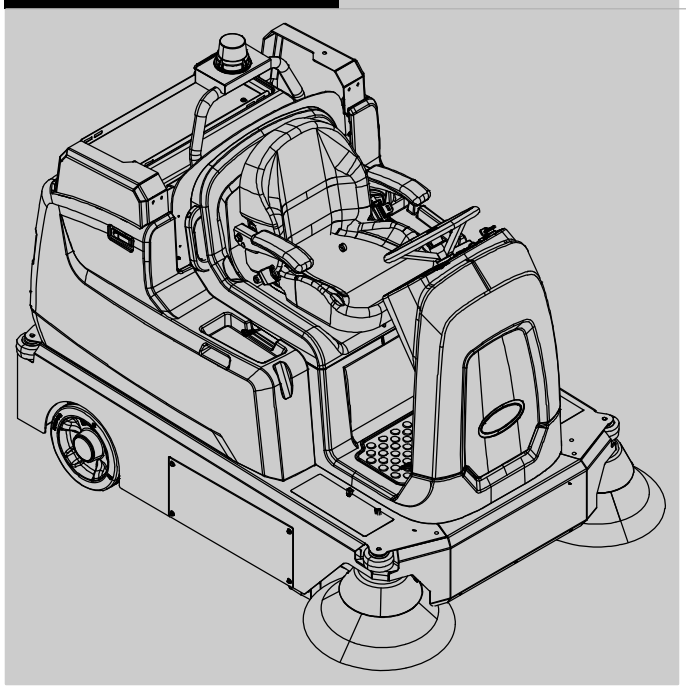

Tennant*True*® *Parts*
IRIS® a Tennant Technology
1–Step®
Smart–Fill® Automatic Battery

Powered by **LITHIUM-ION**

North America / International

For latest Parts manual or other Operator language manual, visit:

www.tennantco.com/manuals

9045325
Rev. 02 (3-2022)

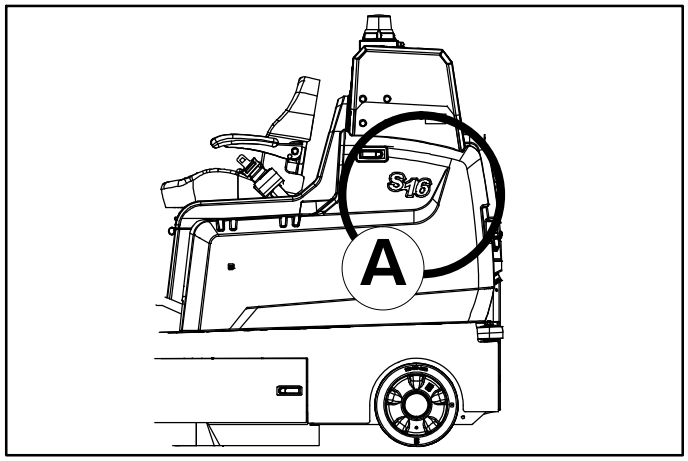

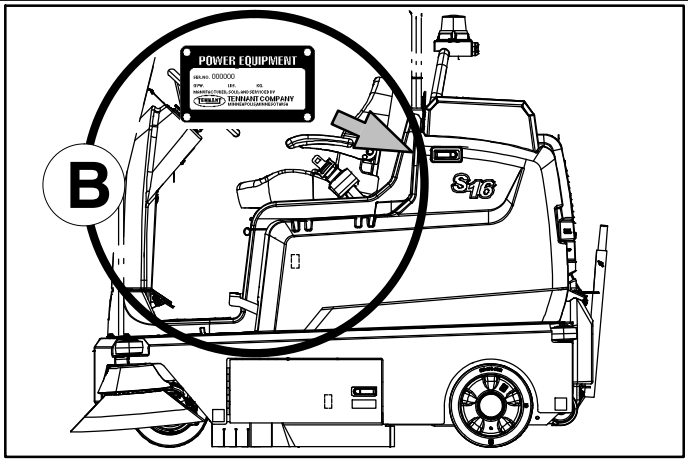

Ref	Part No.	Serial Number	Description	Qty.
1	82681	(000000–)	Bracket Wldt, Lpg Mount	1
▽ 2	63810	(000000–)	Latch Assy, Lpg Tank Mtg, W/Nut	4
▲ 3	51839	(000000–)	Nut Adjustable, Lpg Tank Mtg	2
4	49263	(000000–)	Tie, Cable	3
5	82556	(000000–001039)	Bracket, Vaporizer	1
6	54930	(000000–)	Vaporizer, LPG	1

D

C

EN

HOW TO ORDER PARTS – See diagram above

Only use TENNANT Company supplied or equivalent parts. Parts and supplies may be ordered online, by phone, by fax or by mail.

Follow the steps below to ensure prompt delivery.

1. **(A)** Identify the machine model.
2. **(B)** Identify the machine serial number from the data plate.
3. **(C)** Ensure the proper serial number is used from the parts list.
4. Identify the part number and quantity. Do not order by page or reference numbers.
5. Provide your name, company name, customer ID number, billing and shipping address, phone number and purchase order number.
6. Provide detail shipping instructions.

(D) ▽ – Identifies an assembly
▲ – Identifies parts included in assembly

Please fill out at time of installation for future reference.

Model No. – _____

Serial No. – _____

Machine Options – _____

Sales Rep. – _____

Sales Rep. phone no. – _____

Customer ID Number – _____

Installation Date – _____

Tennant Company
10400 Clean Street
Eden Prairie, MN 55344–2650
Phone: (800) 553–8033 or (763) 513–2850
www.tennantco.com

MaxPro2™, VarioHeight™, Eco–Mode™, Thermo–Sentry™, Perma–Filter™, Duramer™, and FiberShield™ are trademarks of Tennant Company.

Specifications and parts are subject to change without notice.

Copyright © 2020, 2021, 2022 TENNANT Company, Printed in U.S.A.

CN

如何订购部件 – 参见下表

仅使用 TENNANT 公司提供的或同等部件。部件和供应可以在线订购，通过电话、传真或邮件订购。

请遵循下面的步骤确保及时交付。

1. (A) 确定机器型号。
2. (B) 从数据标签确定机器序列号。
3. (C) 确保使用部件列表中的正确序列号。
4. 确定部件号和数量。
   不要按页面或参考编号订购。
5. 提供您的姓名、公司名称、客户 ID 号、付帐和送货地址、电话号码和采购单编号。
6. 提供详细的送货说明。

(D) ▽ – 确定组件
▲ – 确定组件中包含的组件

请在安装时填写供未来参考。

型号 – _____

序列号 – _____

机器选项 – _____

销售代表- _____

销售代表电话号码 – _____

客户 ID 编号 – _____

安装日期 – _____

ES

CÓMO SOLICITAR PIEZAS – Consulte el diagrama anterior.

Utilice sólo las piezas suministradas por TENNANT Company o piezas equivalentes. Puede solicitar las piezas a través de internet, por teléfono, por fax o por correo.

Siga los siguientes pasos para que la entrega sea rápida.

1. **(A)** Indique el modelo de máquina.
2. **(B)** Indique el número de serie de la etiqueta de datos.
3. **(C)** Asegúrese de que indica el número de serie correcto de la lista de piezas.
4. Indique la cantidad y el número de la pieza.
   No realice el pedidoindicando el número de página o el de referencia.
5. Incluya su nombre, el nombre de la empresa, el ID de cliente, las direcciones de envío y facturación, el número de teléfono y el número del pedido de compra.
6. Facilite instrucciones de envío.

(D) ▽ – identifica un conjunto
▲ – identifica piezas de un conjunto

Rellene estos datos cuando realice la instalación para utilizarlos como referencia en el futuro.

Nº modelo – _____

Nº serie – _____

Opciones de la máquina – _____

Vendedor – _____

Nº teléfono vendedor – _____

Nº cliente – _____

Fecha de instalación – _____

FR

COMMENT COMMANDER DES PIÈCES DÉTACHÉES – Voir le schéma ci-dessus.

Utilisez uniquement des pièces fournies par la société TENNANT ou équivalentes. Les pièces et fournitures peuvent être commandées en ligne, par téléphone, fax, ou par courrier.

Suivez les étapes ci-dessous pour assurer une livraison rapide.

1. **(A)** Identifiez le modèle de la machine.
2. **(B)** Identifiez le numéro de série de la machine, à partir de l'étiquette signalétique.
3. **(C)** Assurez-vous que le numéro de série correct est utilisé à partir de la liste de pièces détachées.
4. Identifiez le numéro de pièce et la quantité. Ne commandez pas par page ou numéros de référence.
5. Fournissez votre nom, le nom de votre société, votre numéro d'identification de client, l'adresse de facturation et d'expédition, le numéro de téléphone et le numéro du bon de commande.
6. Fournissez des instructions d'expédition détaillées.

(D) ▽ – identifie un assemblage
▲ – identifie les pièces composant l'assemblage

A remplir au moment de l'installation à titre de référence.

Nº du modèle – _____

Nº de série – _____

Options de la machine – _____

Agent commercial – _____

Nº tél. de l'agent commercial – _____

Numéro d'identification client – _____

Date d'installation – _____

JP

パーツの発注方法 ?上記の図を参照してください

TENNANT社製のパーツまたは同等品のみをお使いください。
パーツやサプライ品のご注文は、オンライン、電話、FAX、または手紙でお願いいたします。
確実にお届けできるように、以下の情報お知らせください。

1. (A) 製品のモデル名をお知らせください。
2. (B) 製品のデータラベルに印刷されているシリアル番号をお知らせください。
3. (C) パーツリストを参照して、シリアル番号が正しいかご確認ください。
4. パーツ番号と数量をお知らせください。マニュアル/カタログのページ番号や参照番号でのご注文はご遠慮ください。
5. お客様のお名前、会社名、顧客ID番号、請求/発送先住所、電話番号、注文書番号をお知らせください。
6. 発送に関するご希望があれば、明記してください。

(D) ▽ – アセンブリを示します
▲ – アセンブリに含まれるパーツを示します

後日確認できるように、設置時に記入してください。

モデルNo. – _____

シリアルNo. – _____

製品のオプション– _____

販売代理店 – _____

販売代理店の電話番号 – _____

顧客ID番号 – _____

設置日 – _____

NA

General Recommended Maintenance Items

	Ref.	Part No.	Serial Number	Description	Qty.
		1067452	(000000–)	Bag, Vacuum, Paper [1pick=1pkg(=10pc)]	1
		377540	(000000–)	Paint, Airdry, Blk, 12oz	1
		377537	(000000–)	Iron Gray S/G Enamel12.8oz[Icm101–00517]	1
		1238116	(000000–)	Filter, Dust, Panel 4.2 X 19.2 X 26.0	1
		1070587	(000000–)	Battery, Wet, 06vdc 0360ah, W/ Cart [Tr]	6
		361144	(000000–)	Key, Ignition, Sgl	1
		1054100	(000000–)	Wheel, 04.0d 2.56w 0.41b	4
▽		9045109	(000000–)	Belt Kit, Swp, Ci	1
▲		1246931	(000000–)	Belt, Drive, 34.3l [Pj09]	1
▲		1223084	(000000–)	Tool, Installation, Belt	1
▲		09164	(000000–)	Screw, Pan, Phl, M6 X 1.00 X 20, 4.8	2
		1252213	(000000–)	Skirt Assy, Front [Sand]	1
		1252460	(000000–)	Skirt, Swp	2
		1244952	(000000–)	Skirt, Recirculation	1
		1240032	(000000–)	Skirt, Swp, Rear	1
		1245246	(000000–)	Skirt, Swp, Rh	1
		1245247	(000000–)	Skirt, Swp, Lh	1
		1247760	(000000–)	Skirt, Brush, Side	1
		1249320	(000000–)	Skirt, Front	1
		1240417	(000000–)	Skirt, Door	2
		1248082	(000000–)	Skirt, Front	1
		1240796	(000000–)	Filter, Hepa, 21.16 X 7.50 X 4.25	1
		1249621	(000000–)	Skirt, Swp, Rh [Carpet]	1
		1249622	(000000–)	Skirt, Swp, Lh [Carpet]	1
		1255297	(000000–)	Skirt Assy, Front [Light Litter]	1

SECTION 2

Contents **Page**

Fig. 1 – Replacement Brushes 2-2
Fig. 2 – Main Frame Group 2-4
Fig. 3 – Shrouds Group 2-6
Fig. 4 – Front Cover and Directional Pedal Group 2-8
Fig. 5 – Steering and Instrument Panel Group . 2-10
Fig. 6 – Seat Support Group 2-12
Fig. 7 – Standard Seat Kit 2-14
Fig. 8 – Deluxe Seat Kit 2-16
Fig. 9 – Drive Wheel and Rear Wheels Group . 2-18
Fig. 10 – Main Brush Drive Motor Group 2-20
Fig. 11 – Main Brush Drive Idler and Lift Arm Group 2-22
Fig. 12 – Main Brush Lift Group 2-24
Fig. 13 – Main Brush Front Flap Group 2-26
Fig. 14 – Main Brush Skirts Group 2-28
Fig. 15 – Side Brush Group, Right Hand 2-30
Fig. 16 – Hopper Group, Low Dump 2-32
Fig. 17 – Hopper Filter Box Cover Group 2-34
Fig. 18 – Hopper Vacuum Fan Group 2-36
Fig. 19 – Hopper Filter Box Housing Group 2-38
Fig. 20 – Hopper Group, High Dump 2-40
Fig. 21 – Hopper Lift Arms Group, High Dump . . 2-42
Fig. 22 – Hopper Hydraulic Lift Cylinder Group, High Dump 2-44
Fig. 23 – Electrical Circuit Board Group 2-46
Fig. 24 – Electrical Box Group 2-48
Fig. 25 – Electrical Box Wiring Group 2-50
Fig. 26 – Battery Tray and Cable Group, Wet, 36V, 360Ah 2-52
Fig. 27 – Wire Harnesses Group 2-54
Fig. 28 – Electrical Schematic 2-66
Fig. 29 – Label Group 2-74

Fig. 1 – Replacement Brushes

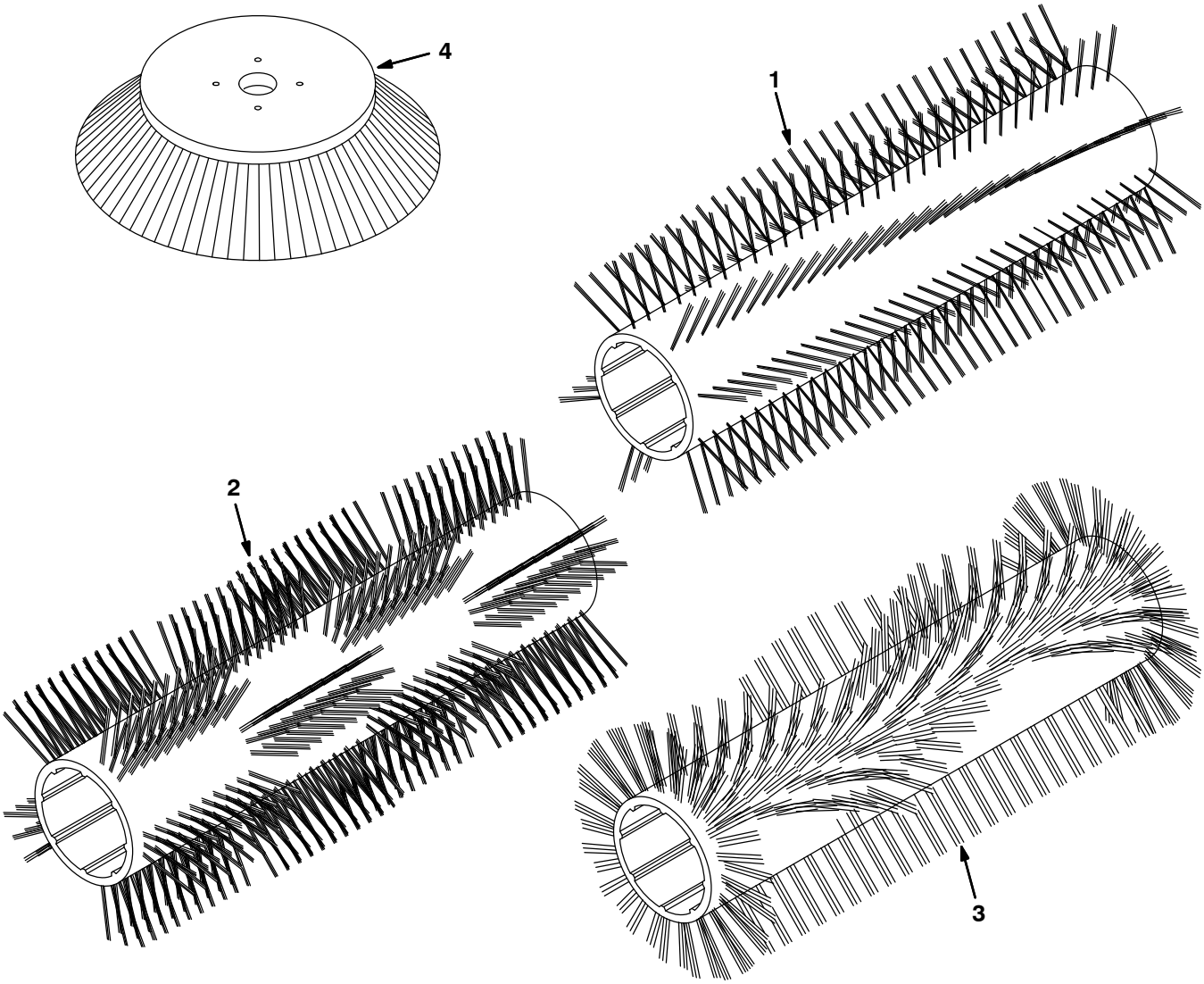

355043

Fig. 1 – Replacement Brushes

Ref.	Part No.	Serial Number	Description	Qty.
1	1240255	(000000–)	Brush, Sweep, 32.4l, 06dr, Polypropylene, Spiral	1
1	1254155	(000000–)	Brush, Sweep, 32.4l, Spiral, Polypropylene and Wire [Bronze]	1
1	1255809	(000000–)	Brush, Sweep, 32.4l, 06sr, Natural Fiber, Spiral	1
2	1239052	(000000–)	Brush, Sweep, 32.4l, Window, Polypropylene, Spiral	1
3	1239051	(000000–)	Brush, Sweep, 32.4l, Wedge, Polypropylene, Spiral	1
4	1225549	(000000–)	Brush, Disk, Sweep, 20.0d, Polypropylene	1

Fig. 2 – Main Frame Group

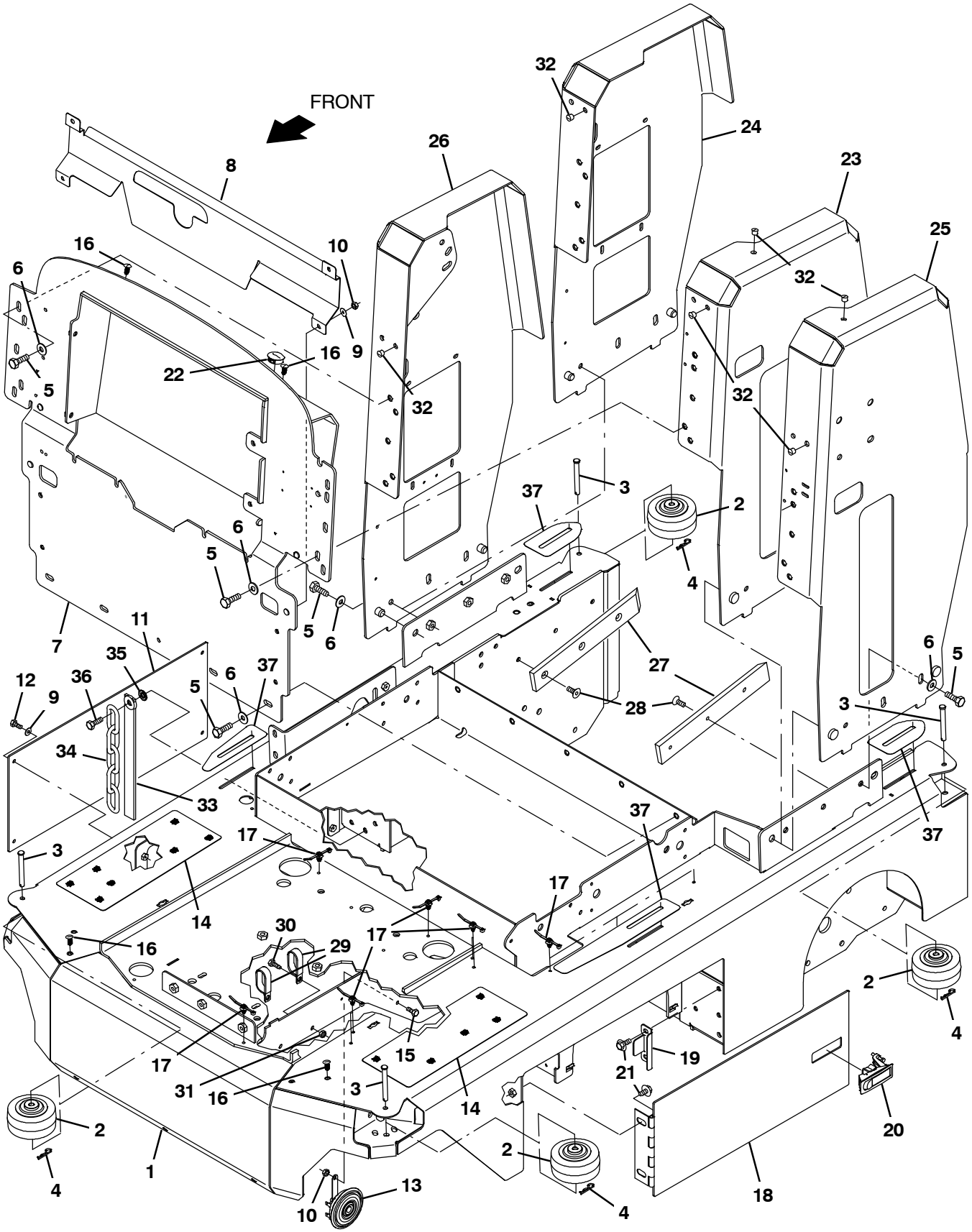

357000 – NA

Fig. 2 – Main Frame Group

Ref.	Part No.	Serial Number	Description	Qty.
1	1239270	(000000–)	Frame Wldt, Main [S16]	1
2	1054100	(000000–)	Wheel, 04.0d 2.56w 0.41b	4
3	57598	(000000–)	Pin, Clevis, 0.37d X 3.25l	4
4	44906	(000000–)	Pin, Cotter, Hair, 0.38d .093 Wir	4
5	370181	(000000–)	Screw, Hex, M10x1.50x25, 10.5	21
6	32492	(000000–)	Washer, Flat, 0.38, Std	21
7	1251372	(000000–)	Bracket Wldt, Bulkhead	1
8	1251299	(000000–)	Plate, Raceway	1
9	01684	(000000–)	Washer, Flat, 0.27b 0.69d .05, Ss	8
10	08712	(000000–)	Nut, Hex, Lock, M6 X 1.00, Nl, Ss	5
11	1248410	(000000–)	Plate, Stop, Door, Brush	1
12	12277	(000000–)	Screw, Hex, M6 X 1.00 X 20, Nl, Ss	4
13	1057780	(000000–)	Horn, 36vdc, 110dba	1
14	1210711	(000000–)	Tread, Non–Skid–Step, 5.5w 13.8l	2
15	06942	(000000–)	Screw, Hex, M6 X 1.00 X 16, 8.8	1
16	21168	(000000–)	Plug, Hole, Rnd, 0.25h 0.8l, Brb, Nyl	8
17	1210807	(000000–)	Wire, Tie [W/.25” Fir Tree Clip]	23
18	1239262	(000000–)	Door Wldt, Brush	1
19	1245009	(000000–)	Bracket, Door Latch Horiz	1
20	398806	(000000–)	Latch	1
21	1020341	(000000–)	Screw, Hex, M8 X 1.25 X 20, Ss, Sems	4
22	76888	(000000–)	Plug, Hole, Rnd, 1.25h .03–.12, Blk Nyl	1
23	1235955	(000000–)	Tower Wldt, Ld, Left (Low Dump Only)	1
24	1235956	(000000–)	Tower Wldt, Ld, Right (Low Dump Only)	1
25	9045085	(000000–)	Tower Wldt, Left, Afmkt [S16 Na] (High Dump Only)	1
25	9045087	(000000–)	Tower Wldt, Left, Afmkt [S16 Jp] (High Dump Only)	1
26	9045082	(000000–)	Tower Wldt, Right, Afmkt [S16 Na] (High Dump Only)	1
26	9045084	(000000–)	Tower Wldt, Right, Afmkt [S16 Jp] (High Dump Only)	1
27	1238485	(000000–)	Block, Pye, 0.44 X 2.0 X 12.6, Hdpe (High Dump Only)	2
28	07810	(000000–)	Screw, Flt, Soc, M8 X 1.25 X 25, 10.9 (High Dump Only)	6
29	09570	(000000–)	Clamp,Cable, Stl, 0.90d X 0.62w, 1hole	2
30	39277	(000000–)	Screw, Hex, M8 X 1.25 X 25, 8.8	2
31	08709	(000000–)	Nut, Hex, Lock, M8 X 1.25, Nl	2
32	33807	(000000–)	Plug, Hole, Rnd, 0.44h .03–.12, Blk Nyl	5
33	71579	(000000–)	Strap, Static, W/Grommet, .19 1.1w 25.0l	1
34	40758	(000000–)	Chain, Coil, Str, 2/0, 06.9l 05 Link	1
35	41141	(000000–)	Washer, Lock, Int–Ext, 0.31	1
36	1072816	(000000–)	Screw, Hex, M8 X 1.25 X 30, Ss, Sems	1
37	1255971	(000000–)	Pad Set, Wear	1

Fig. 3 – Shrouds Group

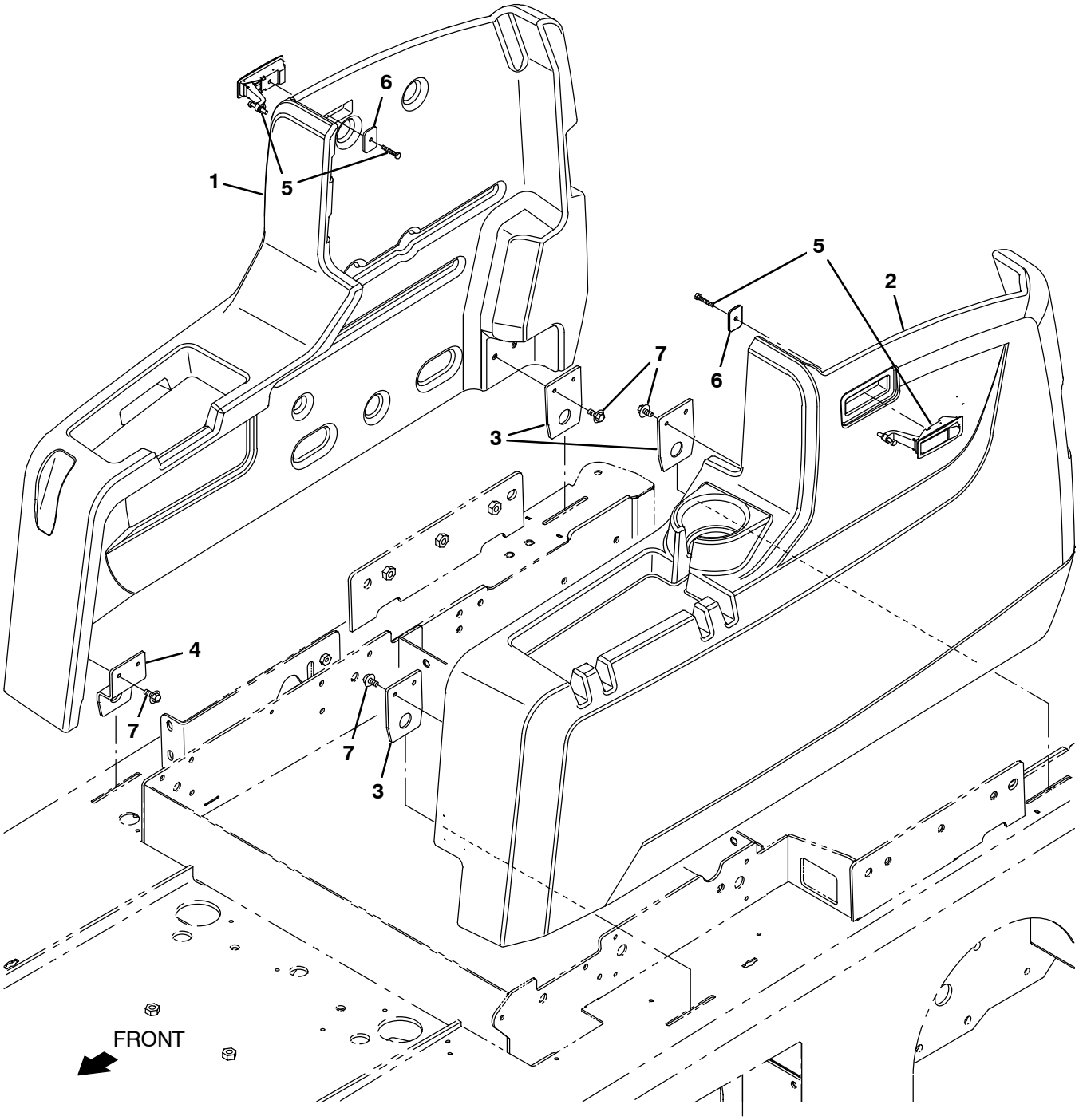

357027 – NA

Fig. 3 – Shrouds Group

Ref.	Part No.	Serial Number	Description	Qty.
1	9045077	(000000–)	Cover, Side, Rh, Afmkt, Std [S16]	1
1	9045097	(000000–)	Cover, Side, Rh, Afmkt, Emea/Jpn [S16]	1
2	9045066	(000000–)	Cover, Side, Lh, Afmkt, Std [S16]	1
2	9045096	(000000–)	Cover, Side, Lh, Afmkt, Emea/Jpn [S16]	1
3	1245421	(000000–)	Plate, Cover, Side	3
4	1248941	(000000–)	Plate, Cover, Front Rh	1
5	398806	(000000–)	Latch	2
6	1208748	(000000–)	Plate, Latch [T17]	2
7	1034731	(000000–)	Screw, Hex, M6 X 1.00 X 16, Sems, Ss	8

Fig. 4 – Front Cover and Directional Pedal Group

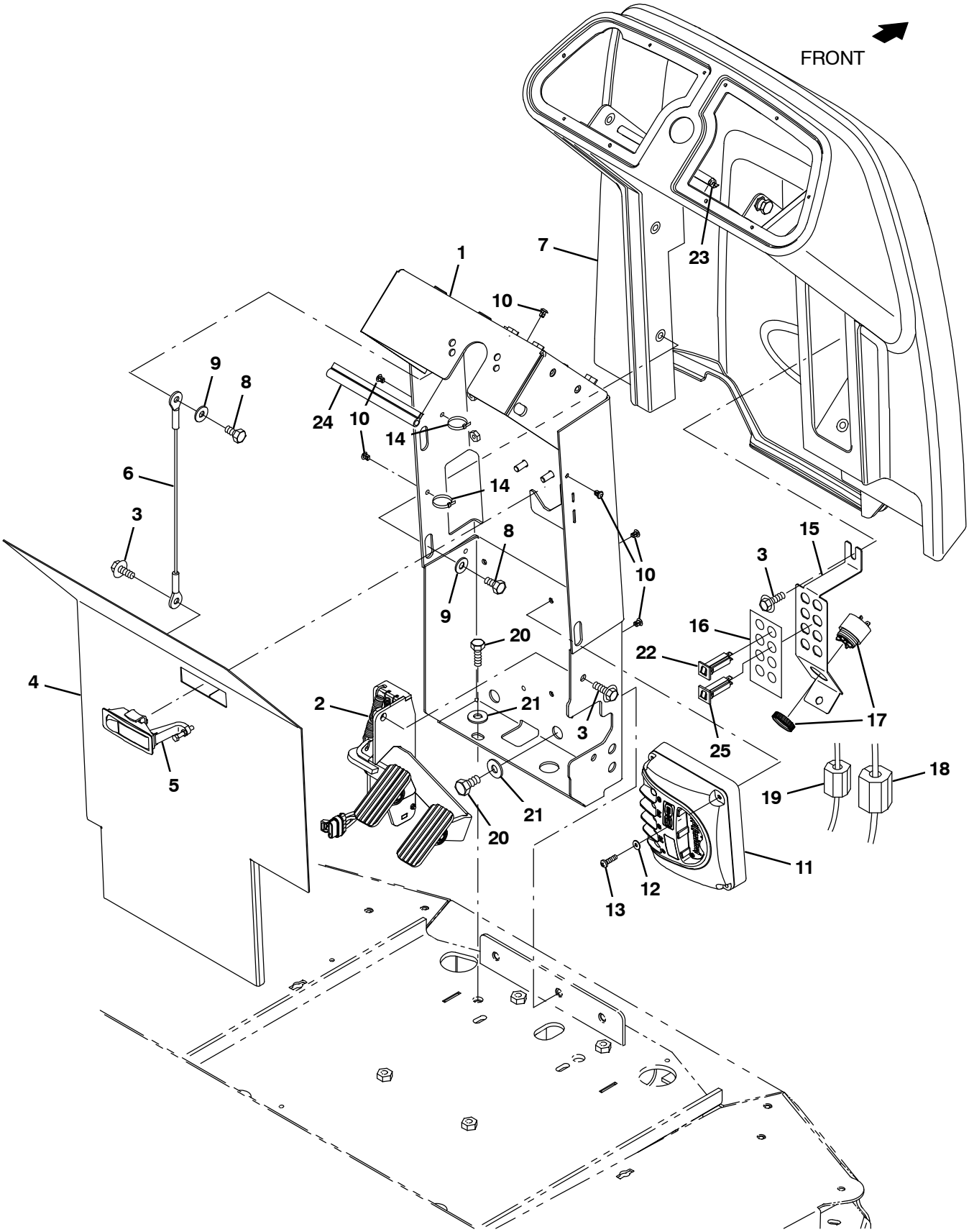

357002 – NA

Fig. 4 – Front Cover and Directional Pedal Group

	Ref.	Part No.	Serial Number	Description	Qty.
	1	1218569	(000000–)	Channel Wldt, Steering, Pntd	1
	2	1200253	(000000–)	Pedal Assy, Accelerator, Brake (See Breakdowns)	1
	3	1020341	(000000–)	Screw, Hex, M8 X 1.25 X 20, Ss, Sems	5
▽	4	9045092	(000000–)	Panel, Access, Front, Afmkt [S16]	1
▲	5	398806	(000000–)	Latch	1
▽	4	9045094	(000000–)	Panel, Access, Front, Afmkt [S16 Jp]	1
▲	5	398806	(000000–)	Latch	1
	6	19676	(000000–)	Cable, Glv .09d 013.0l .38eye /.38eye	1
	7	9010928	(000000–)	Shroud, Front, Afmkt [T12]	1
	8	15675	(000000–)	Screw, Hex, M8 X 1.25 X 16, Ss	5
	9	32491	(000000–)	Washer, Flat, 0.31, Std	5
	10	1202868	(000000–)	Clip, Tie, 0.25d, Plstc	7
	11	1218104	(000000–)	Controller, Drive [T12]	1
	12	19066	(000000–)	Washer, Flat, 0.25B 0.56D, .05, Pl, 10	4
	13	06938	(000000–)	Screw, Pan, Phl, M5X0.80 X 40, 4.8	4
	14	130773	(000000–)	Tie, Cable, Nyl, 11.0l, .14w, 3.0 Max. D	7
	15	1201212	(000000–)	Bracket, Ele, Cb [T12]	1
	16	1201864	(000000–)	Label, Circuitbreaker	1
	17	1052726	(000000–)	Alarm, 9–48vdc, 95 Db(A) [Ec–H20]	1
	18	1052120	(000000–)	Inductor, 25Mmid [218 Imp At 25Mhz] (Australia Only)	1
	19	1052123	(000000–)	Inductor, 18Mmid [156 Imp At 25Mhz] (Australia Only)	1
	20	370181	(000000–)	Screw, Hex, M10x 1.50 x 25, 10.5	4
	21	32492	(000000–)	Washer, Flat, 0.38, Std	4
	22	1064188	(000000–)	Circuitbreaker, 15.0A, Resetable	1
	23	74409	(000000–)	Seal, Lip, 90, 1.3w . Grip 050.0l	1
	24	1031613	(000000–)	Seal, Afmkt, Bulb, Str, .75d F/07ga 01ft	1
	25	1064184	(000000–)	Circuitbreaker, 02.5A, Resetable	1

Fig. 5 – Steering and Instrument Panel Group

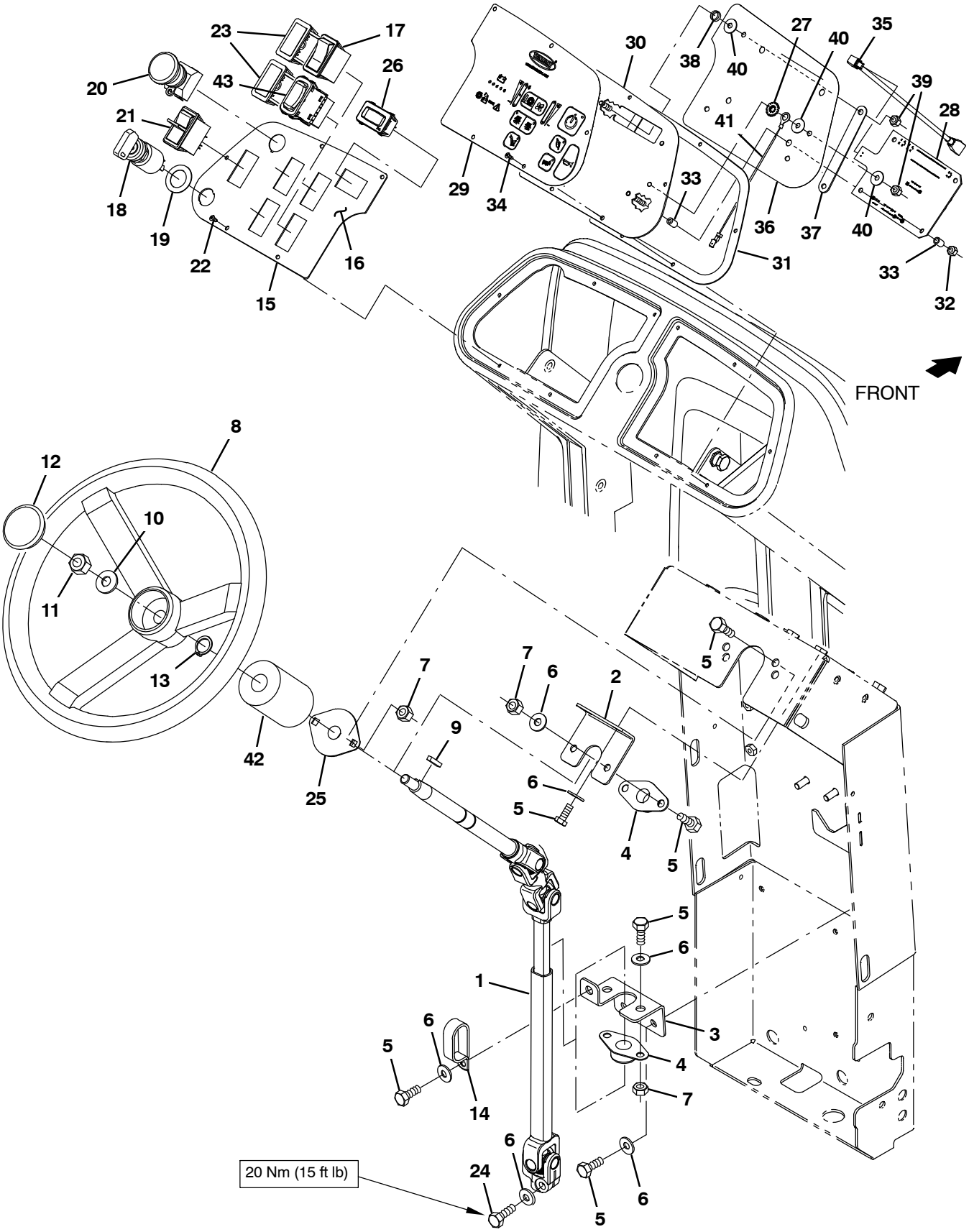

357009

Fig. 5 – Steering and Instrument Panel Group

	Ref.	Part No.	Serial Number	Description	Qty.
	1	1202600	(000000–)	Shaft Assy, Steering, Basic	1
	2	1201253	(000000–)	Bracket, Mtg, Brg	1
	3	1205753	(000000–)	Bracket Wldt, Sppt, Brg	1
	4	223065	(000000–)	Bearing, Flng, 2hole, 0.75b [Nyl]	2
	5	16931	(000000–)	Screw, Hex, M8 X 1.25 X 20, 8.8	5
	6	32491	(000000–)	Washer, Flat, 0.31, Std	8
	7	08709	(000000–)	Nut, Hex, Lock, M8 X 1.25, Nl	6
	8	1036490	(000000–)	Wheel, Steering, 14.0d, Taper Bore	1
	9	00912	(000000–)	Key, Sq, 0.19 X 0.19, 1.00l	1
	10	08711	(000000–)	Nut, Hex, Lock, M12 X 1.75, Nl	1
	11	32493	(000000–)	Washer, Flat, 0.50, Std	1
	12	1038966	(000000–)	Cap, Wheel, Steering	1
	13	26428	(000000–)	Ring, Retaining, Ext, 0.75D, Hd	1
	14	09570	(000000–)	Clamp, Cable, Stl, 0.9x1.8x0.62w, 1hole	1
	15	1249854	(000000–)	Panel Wldt, Console, Lh	1
	16	1247443	(000000–)	Label, Opertnl, Console, Lh [S16]	1
	17	377084	(000000–)	Switch, Rocker, Prgrsv	1
▽	18	361076	(000000–)	Switch, Ignition [Merit Gmbh]	1
▲		361144	(000000–)	Key, ignition, Sgl	1
	19	82226	(000000–)	Washer, Flat, 0.91b 1.38d .06, Stl, Pl	1
	20	1011735	(000000–)	Switch, Safety, Shutoff	1
	21	1058679	(000000–)	Switch, Rocker, Dpdt, On / None / On	1
	22	140825	(000000–)	Screw, Pan, Phl, 06 X 0.50, Fmg/Ab, Blk	5
	23	398501	(000000–)	Plug, Hole, Rt, Rocker Switch, .87 X 1.7	4
	24	39277	(000000–)	Screw, Hex, M8 X 1.25 X 25, 8.8	1
	25	1057554	(000000–)	Bearing, Flng, 2hole, 0.75b	1
	26	1064038	(000000–)	Gauge, Hourmeter, 05–277 Volt, Ac / Dc	1
▽		9045253*	(000000–)	Circuitboard Kit, W/O Telem, Ci [S16]	1
▲	27	41140*	(000000–)	Washer, Lock, Int–Ext, 0.25	1
▲	28	1248505*	(000000–)	Circuitboard Assy [Chui, User Interface]	1
▲▽		9045263*	(000000–)	Membrane Kit, Ci [S16]	1
▲▲	29	1249459*	(000000–)	Panel, Overlay [Jetmore Membrane]	1
▲▲	30	1239539*	(000000–)	Plate, Console, Rh Spacer	1
▲▲	31	1244647*	(000000–)	Gasket, Dash, Rh	1
▲	32	09739*	(000000–)	Nut, Hex, Lock, M5 X 0.80, Nl, Ss	8
▲	33	1252810*	(000000–)	Spacer, Plstc, 0.20b 0.32d 0.47l, Nyl	8
▲	34	222267*	(000000–)	Screw, Pan, Phl, 06 X 0.50, Fmg/Ab, Blk	5
▲	35	1228665*	(000000–)	Cable [Usb, Mini–B, Male 90d, Female]	1
▲	36	1253226*	(000000–)	Cover, Console, Rh	1
▲	37	1254034*	(000000–)	Bracket, Retainer, Console, Rh	1
▲	38	1071856*	(000000–)	Spacer, 0.39b, 0.50d, 0.12l	3
▲	39	08712*	(000000–)	Nut, Hex, Lock, M6 X 1.00, Nl, Ss	4
▲	40	01684*	(000000–)	Washer, Flat, 0.27b 0.69d .05, Ss	6
▲	41	1074344*	(000000–)	Harness, Ele [Ring With .250m Tail]	1
	42	1253149	(000000–)	Gasket, Shaft, Steering	1
	43	1223393	(000000–)	Switch, Rocker, Dpdt, On / None / On	1

***** Requires Tennant *True* service or an authorized Tennant service provider.

Fig. 6 – Seat Support Group

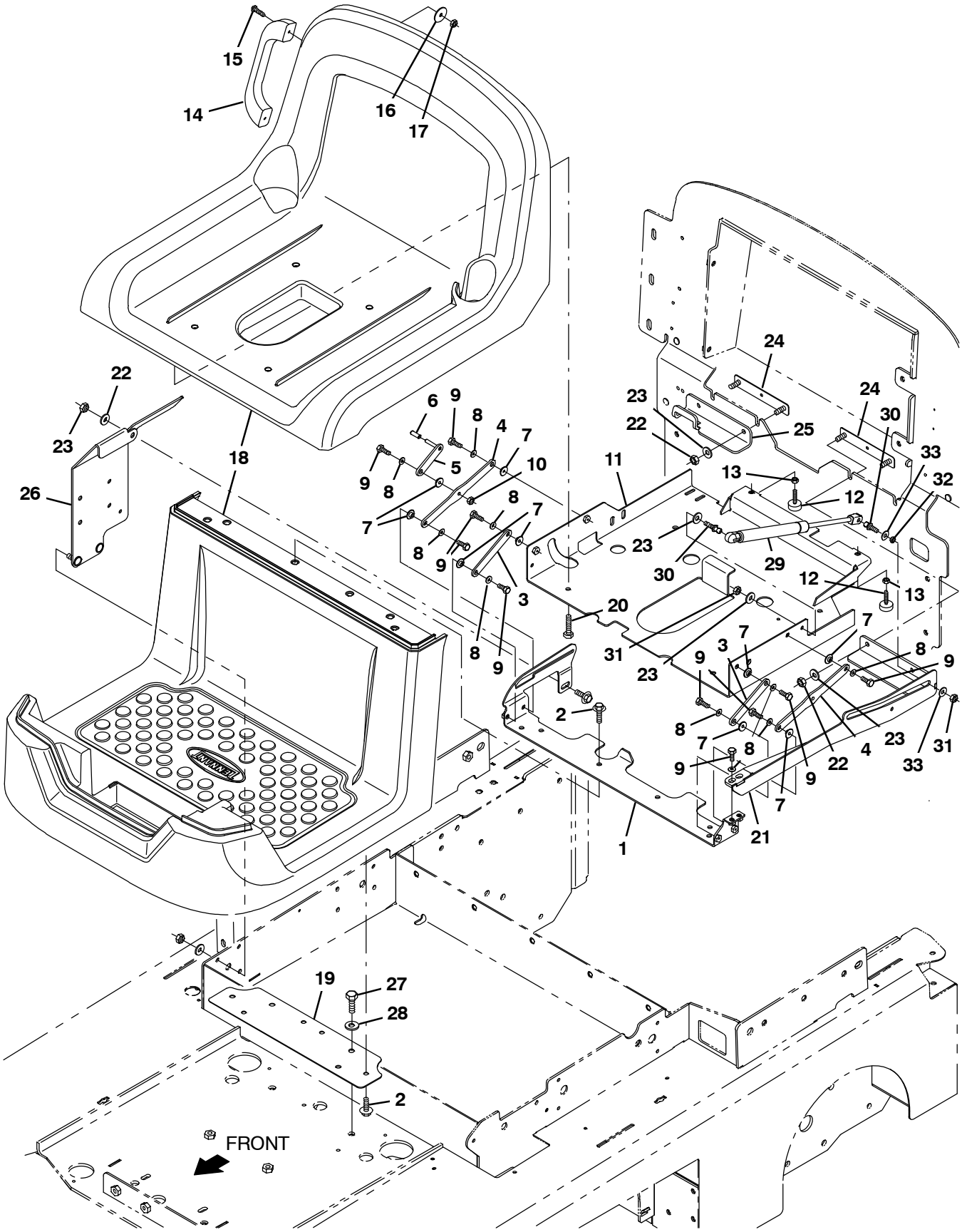

357003 – NA

Fig. 6 – Seat Support Group

Ref.	Part No.	Serial Number	Description	Qty.
1	9011057	(000000–)	Plate Wldt, Mtg, W/Label, Aftmkt, Na	1
1	9011058	(000000–)	Plate Wldt, Mtg, W/Label, Aftmkt, JP	1
2	1020341	(000000–)	Screw, Hex, M8 X 1.25 X 20, Ss, Sems	10
3	1200827	(000000–)	Link, Oprtr Station	2
4	1200828	(000000–)	Link, Oprtr Station	2
5	1201103	(000000–)	Link Wldt, Oprtr Station	1
6	1202957	(000000–)	Grip, Handle, .25d .90l Yel	1
7	1202156	(000000–)	Sleeve, Flange	9
8	19066	(000000–)	Washer, Flat, 0.25b 0.56d .05, Pl, 10	10
9	08716	(000000–)	Screw, Hex, M6 X 1.00 X 20, Ss	9
10	08708	(000000–)	Nut, Hex, Lock, M6 X 1.00, Nl	1
11	1200210	(000000–)	Channel Wldt, Seat	1
12	20802	(000000–)	Bumper, Rbr, 1.0d 0.38th .25–20	2
13	32520	(000000–)	Nut, Hex, Jam, .25–20	2
14	381962	(000000–)	Handle, Container	1
15	382726	(000000–)	Screw, Pan, Phl, M6 X 1.00 X 25, 4.8	2
16	41178	(000000–)	Washer, Flat, 0.25, Fendr	2
17	08712	(000000–)	Nut, Hex, Lock, M6 X 1.00, Nl, Ss	2
18	9009632	(000000–)	Part Kit, Station, Oprtn, Plstc [2Pc=1Kit]	1
19	1242206	(000000–)	Angle, Support	1
20	09026	(000000–)	Screw, Hex, M8 X 1.25 X 40, Ss	4
21	1251979	(000000–)	Bracket Wldt, Seat, Spring, Mtg	1
22	08709	(000000–)	Nut, Hex, Lock, M8 X 1.25, Nl	7
23	32491	(000000–)	Washer, Flat, 0.31, Std	11
24	1251741	(000000–)	Plate Wldt, Mtg, Sppt, Seat	2
25	1251316	(000000–)	Bracket, Sppt, Seat	1
26	1246136	(000000–)	Bracket, Support, Pump	1
27	39283	(000000–)	Screw, Hex, M10x1.50x25, 8.8	2
28	32492	(000000–)	Washer, Flat, 0.38, Std	2
29	1251919	(000000–)	Dampener, Linear, 5.0strk	1
30	1012878	(000000–)	Stud, Ball, .39d .31–18	2
31	32983	(000000–)	Nut, Hex, Lock, .31–18, Nl	2
32	1066720	(000000–)	Sleeve, P/M, 0.32b 0.44d 0.2l [430ss]	1
33	630446	(000000–)	Washer, Flat, 0.31b 0.75d .06, Nyl	2

Fig. 7 – Standard Seat Kit

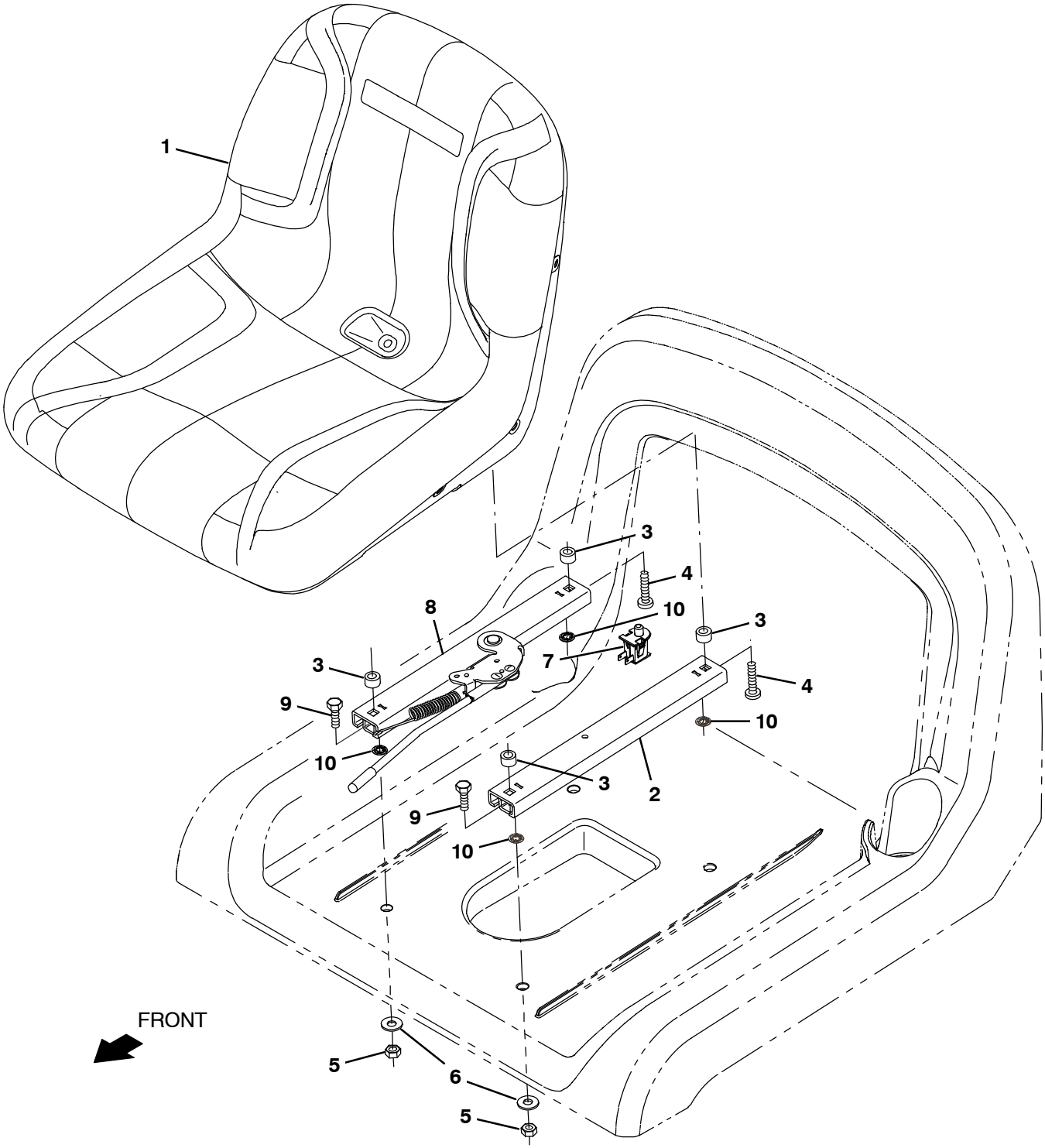

357062

Fig. 7 – Standard Seat Kit

	Ref.	Part No.	Serial Number	Description	Qty.
▽		9009834	(000000–)	Seat Kit, Std, Ci [T12]	1
▲	1	1201894	(000000–)	Seat, Std [Milsco]	1
▲	2	1077067	(000000–)	Track, N–Lkg, Seat, 12.5l, No Stud	1
▲	3	1051052	(000000–)	Spacer, Rnd, .38b .88d .38l	4
▲	4	49177	(000000–)	Screw, Pan, Phl, .31–18 X 1.00, G2	4
▲	5	41437	(000000–)	Nut, Hex, Lock, .31–18, Nl, Ss	4
▲	6	01685	(000000–)	Washer, Flat, 0.38b 0.88d .08, Ss	4
▲	7	1048955	(000000–)	Switch, Seat, No [Delta 6440–04]	1
▲	8	1077071	(000000–)	Track, Locking, 12.5l, No Stud W/Handle	1
▲	9	76955	(000000–)	Screw, Hex, .31–18 X 1.00, G5	4
▲	10	1077073	(000000–)	Nut, Push, Bolt Retention, Stl,5/16 Thrd	4

Fig. 8 – Deluxe Seat Kit

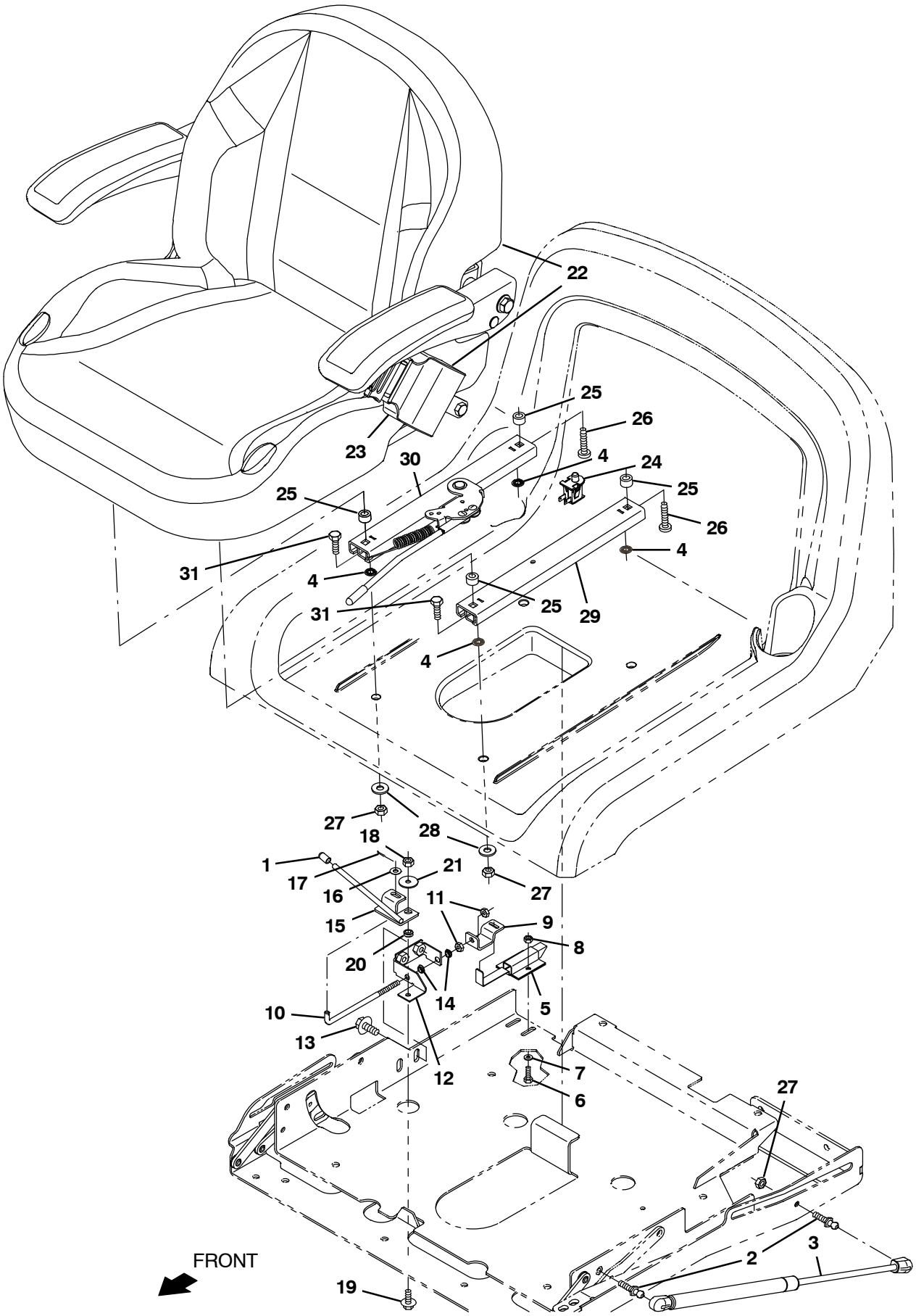

357004

Fig. 8 – Deluxe Seat Kit

	Ref.	Part No.	Serial Number	Description	Qty.
▽		9045202	(000000–)	Seat Kit, Deluxe, Ci [S16]	1
▲	1	1202957	(000000–)	Grip, Handle, .25d .60l Yel	1
▲	2	1012878	(000000–)	Stud, Ball, .39d .31–18	2
▲	3	1260773	(000000–)	Gas Spring, 35lb, 8.0strk	1
▲	4	1077073	(000000–)	Nut, Push, Bolt Retention, Stl,5/16 Thrd	4
▲	5	1025736	(000000–)	Latch	1
▲	6	24199	(000000–)	Screw, Hex, M5 X 0.80 X 16, Ss	2
▲	7	19065	(000000–)	Washer, Flat, 0.19b 0.44d .05, Pl, 08	2
▲	8	09739	(000000–)	Nut, Hex, Lock, M5 X 0.80, Nl, Ss	2
▲	9	1200999	(000000–)	Angle, Latch	1
▲	10	1203958	(000000–)	Handle, Latch	1
▲	11	32520	(000000–)	Nut, Hex, Jam, .25–20	2
▲	12	1203946	(000000–)	Bracket Wldt, Latch	1
▲	13	1020341	(000000–)	Screw, Hex, M8 X 1.25 X 20, Ss, Sems	2
▲	14	80921	(000000–)	Bushing, Snap–In, 0.25b 0.31d 0.08th Nyl	2
▲	15	1253493	(000000–)	Handle Wldt, Latch, Seat	1
▲	16	01684	(000000–)	Washer, Flat, 0.27b 0.69d .05, Ss	2
▲	17	08085	(000000–)	Pin, Cotter, Hair, 0.31d .058 Wir	1
▲	18	08712	(000000–)	Nut, Hex, Lock, M6 X 1.00, Nl, Ss	1
▲	19	1034731	(000000–)	Screw, Hex, M6 X 1.00 X 16, Ss, Sems	1
▲	20	1205764	(000000–)	Sleeve, P/M, 0.25b 0.38d 0.1l [430ss]	1
▲	21	29570	(000000–)	Washer, Flat, 0.28b 1.00d .06, Stl	1
▲▽	22	1201428	(000000–)	Seat, Dlx, W/ Armrests & Orange Seatbelt	1
▲▲	23	1248442	(000000–)	Seatbelt, Orange, Retractable, Afmkt	1
▲▲	24	1048955	(000000–)	Switch, Seat, No [Delta 6440–04]	1
▲	25	1051052	(000000–)	Spacer, Rnd, .38b .88d .38l	4
▲	26	49177	(000000–)	Screw, Pan, Phl, .31–18 X 1.00, G2	4
▲	27	41437	(000000–)	Nut, Hex, Lock, .31–18, Nl, Ss	6
▲	28	01685	(000000–)	Washer, Flat, 0.38b 0.88d .08, Ss	4
▲	29	1077067	(000000–)	Track, N–Lkg, Seat, 12.5l, No Stud	1
▲	30	1077071	(000000–)	Track, Locking, 12.5l, No Stud W/Handle	1
▲	31	76955	(000000–)	Screw, Hex, .31–18 X 1.00, G5	4

Fig. 9 – Drive Wheel and Rear Wheels Group

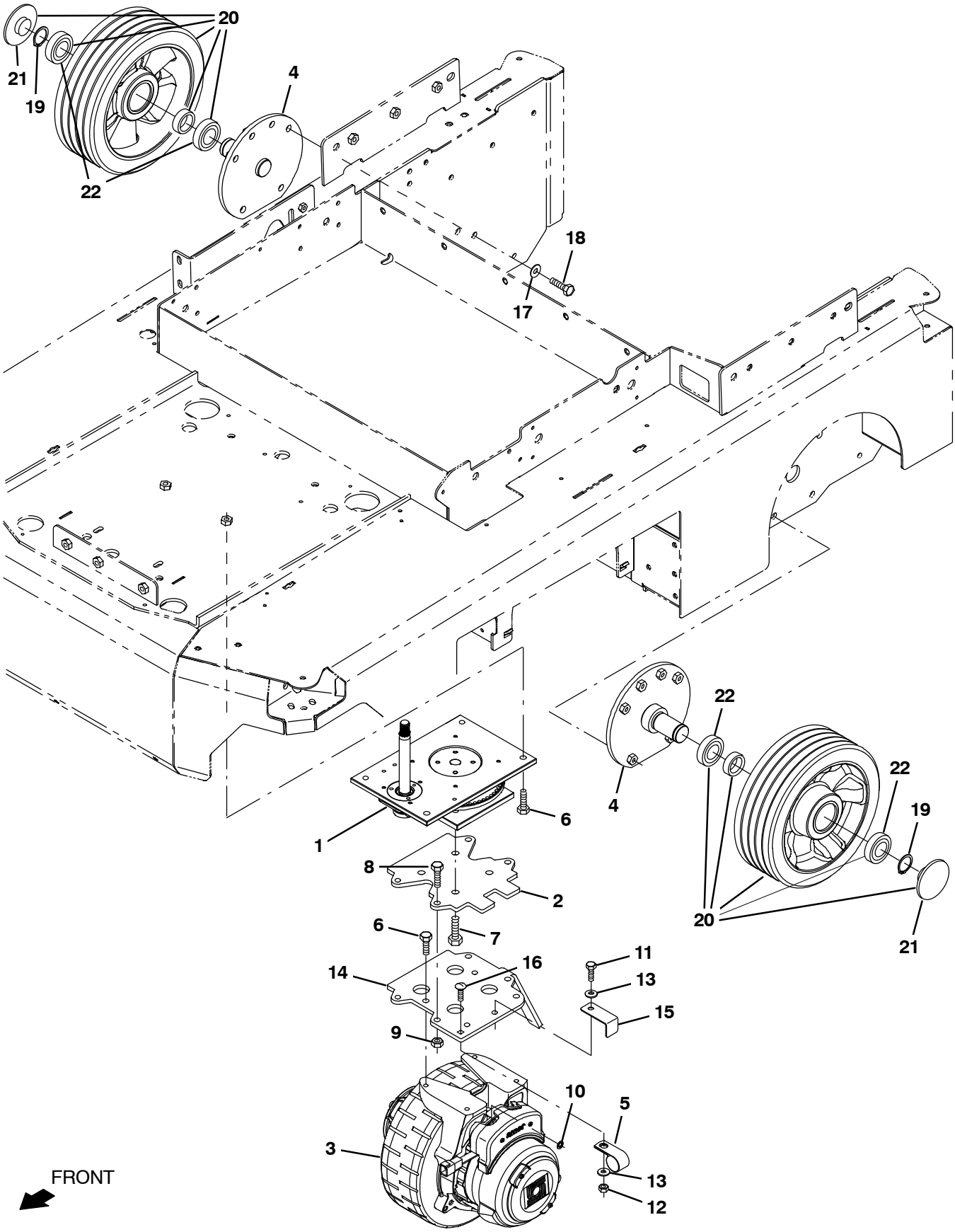

357021

Fig. 9 - Drive Wheel and Rear Wheels Group

	Ref.	Part No.	Serial Number	Description	Qty.
	1	1200203	(000000-)	Steer- Control Assy, Wheel Drive [T12] (See Breakdowns) (Obsolete, Replaced by 1256309)	1
	1	1256309	(000000-)	Steer- Control Assy, Wheel Drive	1
	2	1241485	(000000-)	Plate, Spacer, Top	1
	3	1250375	(000000-)	Wheel Assy, Drive, Ac, W/ Brake (See Breakdowns)	1
	4	1239265	(000000-)	Plate Wldt, Wheel, Axle	2
	5	58366	(000000-)	Clamp, Cable, Stl, 1.25d X 1.00w, 1hole	1
	6	39283	(000000-)	Screw, Hex, M10x1.50x25, 8.8	8
	7	41345	(000000-)	Screw, Hex, M12 X 1.75 X 25, 8.8	4
	8	03192	(000000-)	Screw, Hex, M10 X 1.50 X 30, 8.8	4
	9	41430	(000000-)	Nut, Hex, Lock, M10 X 1.5, Nl	4
	10	32984	(000000-)	Washer, Lock, Int, 0.31	2
	11	09010	(000000-)	Screw, Hex, M8 X 1.25 X 25, Ss	1
	12	08709	(000000-)	Nut, Hex, Lock, M8 X 1.25, Nl	1
	13	32491	(000000-)	Washer, Flat, 0.31, Std	2
	14	1252221	(000000-)	Plate Wldt, Spacer, Bottom	1
	15	1252222	(000000-)	Plate, Harness	1
	16	1035684	(000000-)	Bolt, Carriage, M8 X 1.25 X 30	1
	17	32492	(000000-)	Washer, Flat, 0.38, Std	8
	18	03192	(000000-)	Screw, Hex, M10 X 1.50 X 30, 8.8 (High Dump Only)	8
	18	39284	(000000-)	Screw, Hex, M10 X 1.50 X 35, 8.8 (Low Dump Only)	8
	19	1059019	(000000-)	Ring, Retaining, Ext, 1.375od	2
▽	20	1060626	(000000-)	Tire Assy, Solid, 300mm X 100mm, Ure	2
▲	21	9011872	(000000-)	Cap, Hub, Wheel [For 1060626]	1
▲	22	24899	(000000-)	Bearing, Ball, 1.38b 2.83d 0.67w	2

Fig. 10 – Main Brush Drive Motor Group

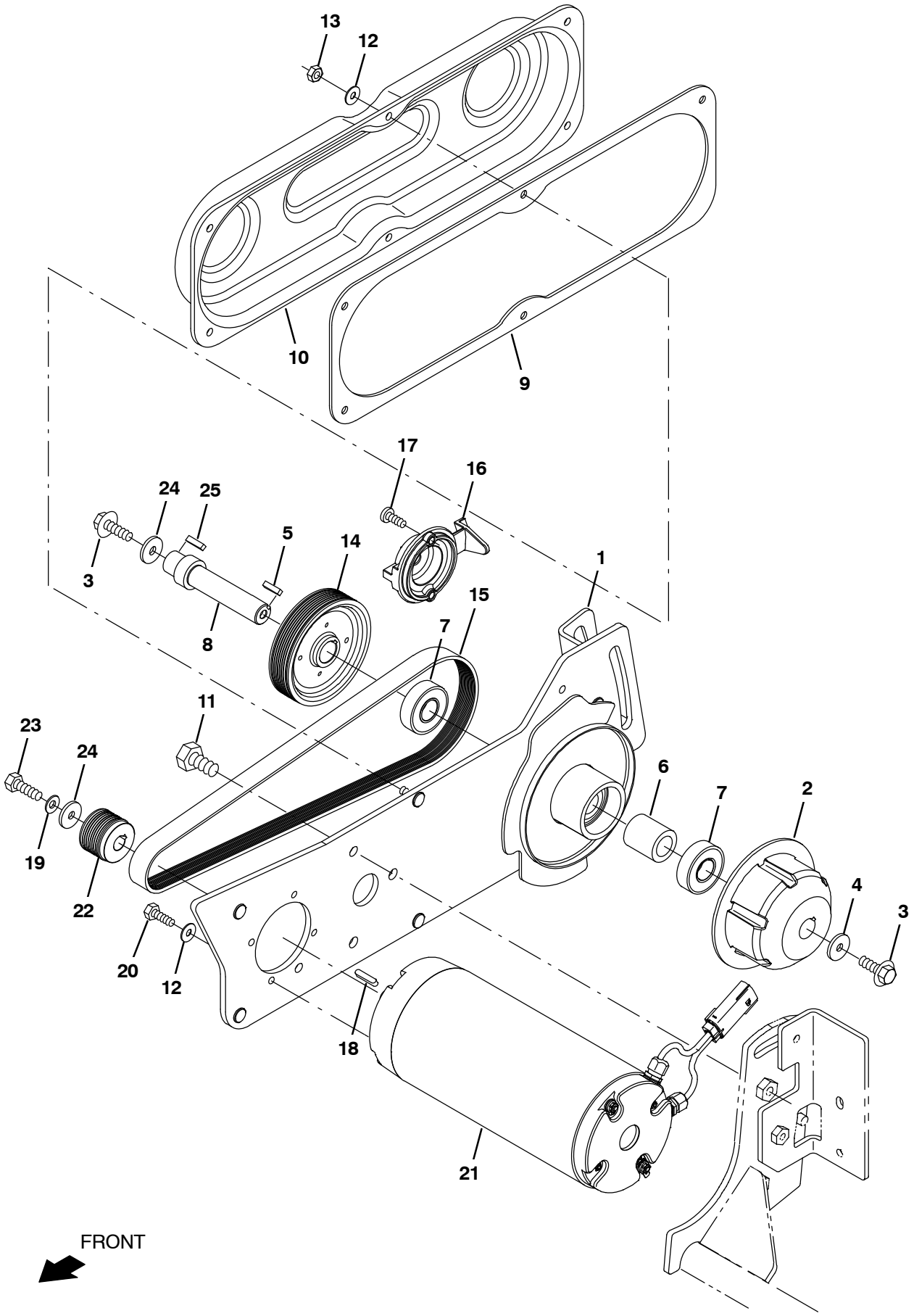

357011

Fig. 10 – Main Brush Drive Motor Group

	Ref.	Part No.	Serial Number	Description	Qty.
▽		9045103	(000000–)	Drive Kit, Swp, Ci	1
▲	1	1236830	(000000–)	Arm Wldt, Drive	1
▲	2	1204881	(000000–)	Plug, Drive, Brush	1
▲	3	1072816	(000000–)	Screw, Hex, M8 X 1.25 X 30, Ss, Sems	2
▲	4	1017218	(000000–)	Washer, Flat, 0.32b 1.00d .12, Ss	1
▲	5	00911	(000000–)	Key, Sq, 0.19 X 0.19, 0.75l	1
▲	6	1238477	(000000–)	Spacer, Brg	1
▲	7	46390	(000000–)	Bearing, Ball, 0.79b 1.85d 0.55w	2
▲	8	1237865	(000000–)	Shaft, Drive, Brush	1
	9	1249068	(000000–)	Gasket, Belt, Cover	1
	10	1238296	(000000–)	Cover, Belt	1
	11	09770	(000000–)	Screw, Hex, M10 X 1.50 X 25, Nl, Ss	2
	12	01684	(000000–)	Washer, Flat, 0.27b 0.69d .05, Ss	10
	13	08712	(000000–)	Nut, Hex, Lock, M6 X 1.00, Nl, Ss	6
	14	1204639	(000000–)	Sheave, 09grv, 4.13pd 0.75b [Pj]	1
▽		9045109	(000000–)	Belt Kit, Swp, Ci	1
▲	15	1246931	(000000–)	Belt, Drive, 34.3l [Pj09]	1
▲	16	1223084	(000000–)	Tool, Installation, Belt	1
▲	17	09164	(000000–)	Screw, Pan, Phl, M6 X 1.00 X 20, 4.8	2
	18	1014328	(000000–)	Key, Sq, 05mm X 05mm, 25mml	1
	19	41185	(000000–)	Washer, Flat, Belleville, .25	1
	20	12277	(000000–)	Screw, Hex, M6 X 1.00 X 20, Nl, Ss	4
	21	1245767	(000000–)	Motor, Ele, 36vdc 1900rpm 1.0hp	1
	22	1246932	(000000–)	Sheave, 09grv, 1.61pd 0.55b [Pj]	1
	23	06942	(000000–)	Screw, Hex, M6 X 1.00 X 16, 8.8	1
	24	1017218	(000000–)	Washer, Flat, 0.32b 1.00d .12, Ss	2
	25	00911	(000000–)	Key, Sq, 0.19 X 0.19, 0.75l	1

Fig. 11 – Main Brush Drive Idler and Lift Arm Group

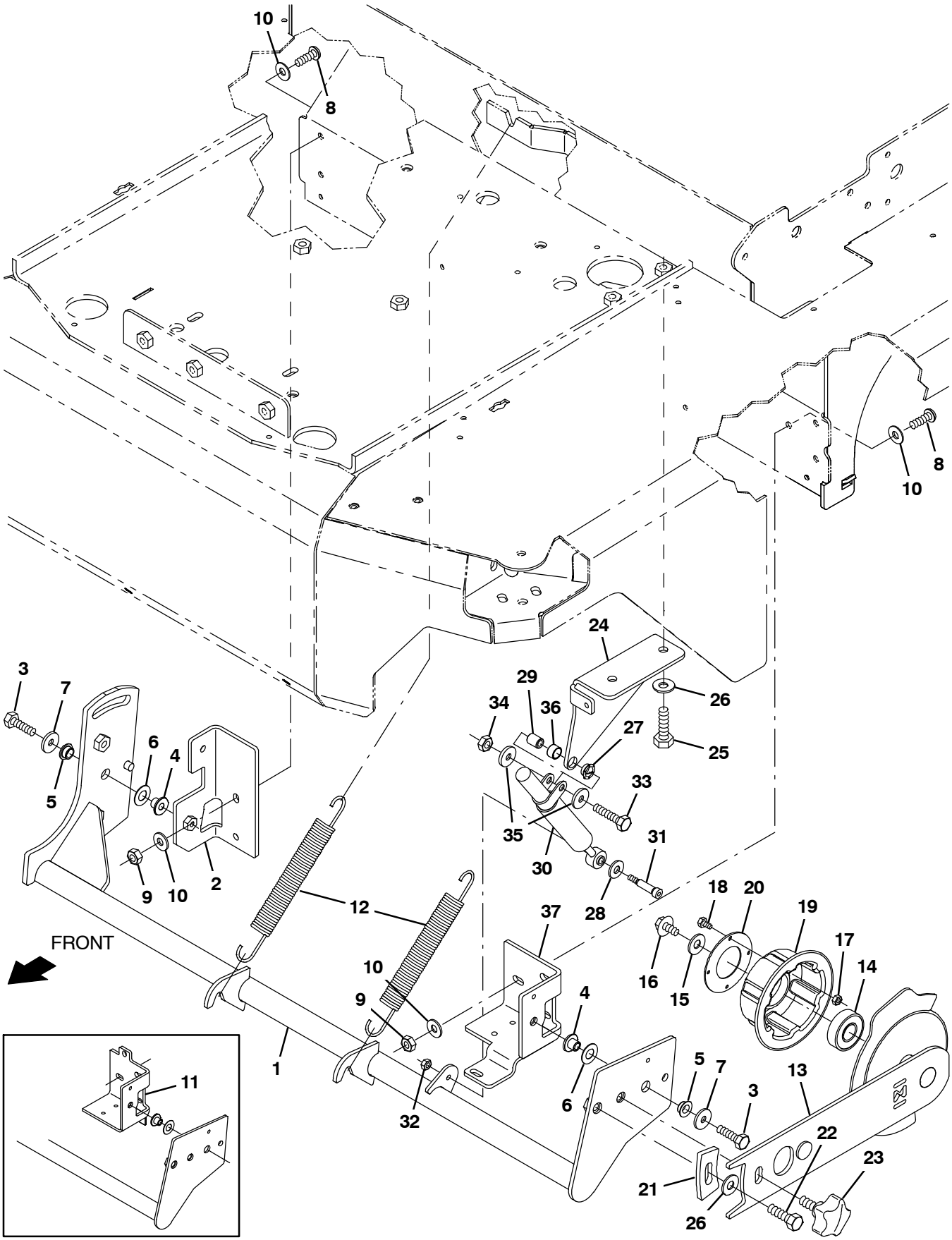

357056 - NA

Fig. 11 – Main Brush Drive Idler and Lift Arm Group

	Ref.	Part No.	Serial Number	Description	Qty.
	1	1236827	(000000–)	Arm Wldt, Lift, Swp	1
	2	1243199	(000000–)	Bracket Wldt, Mtg, Pivot	1
	3	1016399	(000000–)	Screw, Hex, M8 X 1.25 X 30, Nl, Ss	2
	4	1225659	(000000–)	Bushing, Flng, 8.3b 11.8d 9.7l	2
	5	1225660	(000000–)	Bushing, Flng, 12.0b 7.0l 14.0d, Plstc	2
	6	89710	(000000–)	Washer, Flat, 0.51b 1.00d .03, Nyl	2
	7	1017218	(000000–)	Washer, Flat, 0.32b 1.00d .12, Ss	2
	8	223470	(000000–)	Screw, Btn, M8 X 1.25 X 25, Ss	5
	9	08709	(000000–)	Nut, Hex, Lock, M8 X 1.25, Nl	5
	10	01685	(000000–)	Washer, Flat, 0.38b 0.88d .08, Ss	10
	11	9045141	(000000–002130)	Parts Kit, Front Skirt, Linkage (HIGH DUMP)	1
	11	9045141	(000000–001068)	Parts Kit, Front Skirt, Linkage (LOW DUMP)	1
	12	1248923	(000000–)	Spring, Extn, 0.96od 0.12wir 8.73l	2
▽		9045104	(000000–)	Idler Kit, Swp, Ci	1
▲	13	1236847	(000000–)	Arm Wldt, Idler	1
▲	14	46390	(000000–)	Bearing, Ball, 0.79b 1.85d 0.55w	1
▲	15	01686	(000000–)	Washer, Flat, 0.44b 1.00d .08, Ss	1
▲	16	1020341	(000000–)	Screw, Hex, M8 X 1.25 X 20, Ss, Sems	1
▲	17	06549	(000000–)	Nut, Hex, M5 X 0.80 X 16, 8.8	4
▲	18	09738	(000000–)	Screw, Hex, M5 X 0.80 X 12, Ss	4
▲	19	81818	(000000–)	Plug, Drive, Brush, Spl	1
▲	20	35836	(000000–)	Retainer, Brg	1
	21	1245963	(000000–)	Plate, Adjust	1
	22	12317	(000000–)	Screw, Hex, M10 X 1.5 X 30, 9.8, Sems	1
	23	1223100	(000000–)	Knob, Star, 2.00d 5ear, M10 X 1.0l Stud	1
	24	1253880	(000000–)	Bracket, Dampner	1
	25	09770	(000000–)	Screw, Hex, M10 X 1.50 X 25, Nl, Ss	2
	26	01686	(000000–)	Washer, Flat, 0.44b 1.00d .08, Ss	3
	27	36556	(000000–)	Bushing, Flng, 0.50b 0.56d 0.22l, Nyl	1
	28	01685	(000000–)	Washer, Flat, 0.38b 0.88d .08, Ss	1
	29	80395	(000000–)	Sleeve, P/M, 0.32b 0.50d 0.7l [430ss]	1
	30	73411	(000000–)	Shock Absorber, 2.3 Strk	1
	31	1024965	(000000–)	Bolt, Shld, 08mmd X 030mm, M06 X 1.0	1
	32	07785	(000000–)	Nut, Hex, Std, M6 X 1.00, Ss	1
	33	09026	(000000–)	Screw, Hex, M8 X 1.25 X 40, Ss	1
	34	08709	(000000–)	Nut, Hex, Lock, M8 X 1.25, Nl	1
	35	1017218	(000000–)	Washer, Flat, 0.32b 1.00d .12, Ss	2
	36	64173	(000000–)	Bushing, Sleeve, 0.50b 0.59d 0.38l, Stl	1
	37	1255839	(002131–)	Bracket Wldt, Mtg, Pivot, Lh (HIGH DUMP)	1
	37	1255839	(001069–)	Bracket Wldt, Mtg, Pivot, Lh (LOW DUMP)	1

Fig. 12 – Main Brush Lift Group

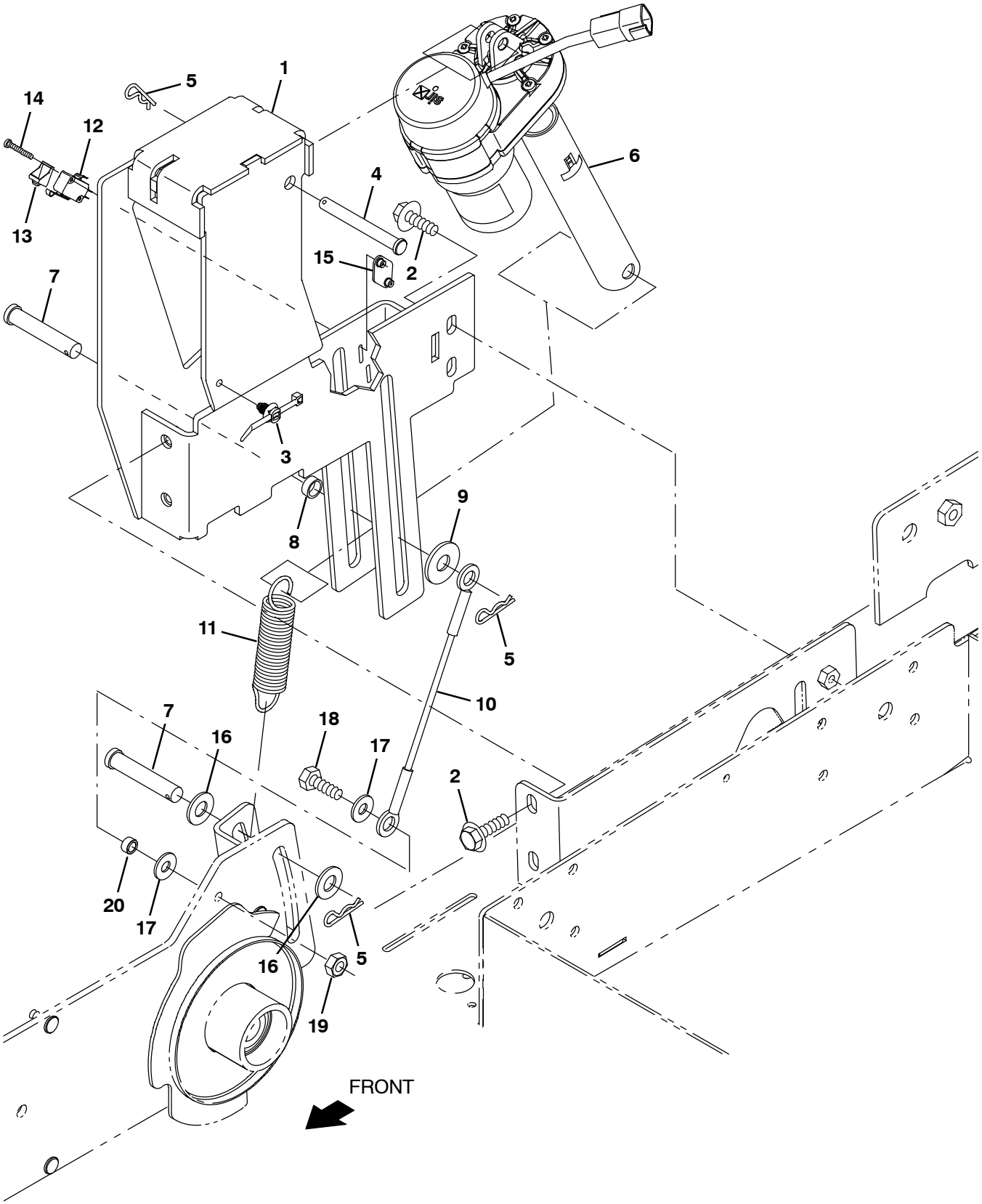

357033

Fig. 12 – Main Brush Lift Group

Ref.	Part No.	Serial Number	Description	Qty.
1	1248488	(000000–)	Mount Wldt, Actuator, Swp	1
2	1072628	(000000–)	Screw, Hex, M8 X 1.25 X 25, Ss, Sems	4
3	1210807	(000000–)	Wire, Tie [W/.25” Fir Tree Clip]	1
4	57598	(000000–)	Pin, Clevis, 0.37d X 3.25l	1
5	44906	(000000–)	Pin, Cotter, Hair, 0.38d .093 Wir	3
6	1227206	(000000–)	Actuator, 36vdc, 7.00strk, 0600lb[Std]	1
7	23683	(000000–)	Pin, Clevis, 0.50d X 3.00l	2
8	140139	(000000–)	Sleeve, P/M, 0.50b 0.63d 0.3l, Pl	1
9	41619	(000000–)	Washer, Flat, 0.56b 1.38d .11, Ss	1
10	1248163	(000000–)	Cable, Lift, 0.13d 8.17l 0.50eye/0.50eye	1
11	360488	(000000–)	Spring, Extn	1
12	1215716	(000000–)	Switch, 0.1a, Spdt[Micro, Gold Contacts]	1
13	600372	(000000–)	Boot, Switch	1
14	06922	(000000–)	Screw, Pan, Phl, M3 X 0.50 X 20, 4.8	2
15	1013705	(000000–)	Plate, Thread, Switch, M3 Nut, 96hr Pl	1
16	32486	(000000–)	Washer, Flat, 0.53b 1.06d .10, Stl, Pl	2
17	01685	(000000–)	Washer, Flat, 0.38b 0.88d .08, Ss	2
18	09010	(000000–)	Screw, Hex, M8 X 1.25 X 25, Ss	1
19	08713	(000000–)	Nut, Hex, Lock, M8 X 1.25, Nl, Ss	1
20	367452	(000000–)	Bushing, Sleeve, 0.50b 0.59d 0.25l, Oib	1

Fig. 13 – Main Brush Front Flap Group

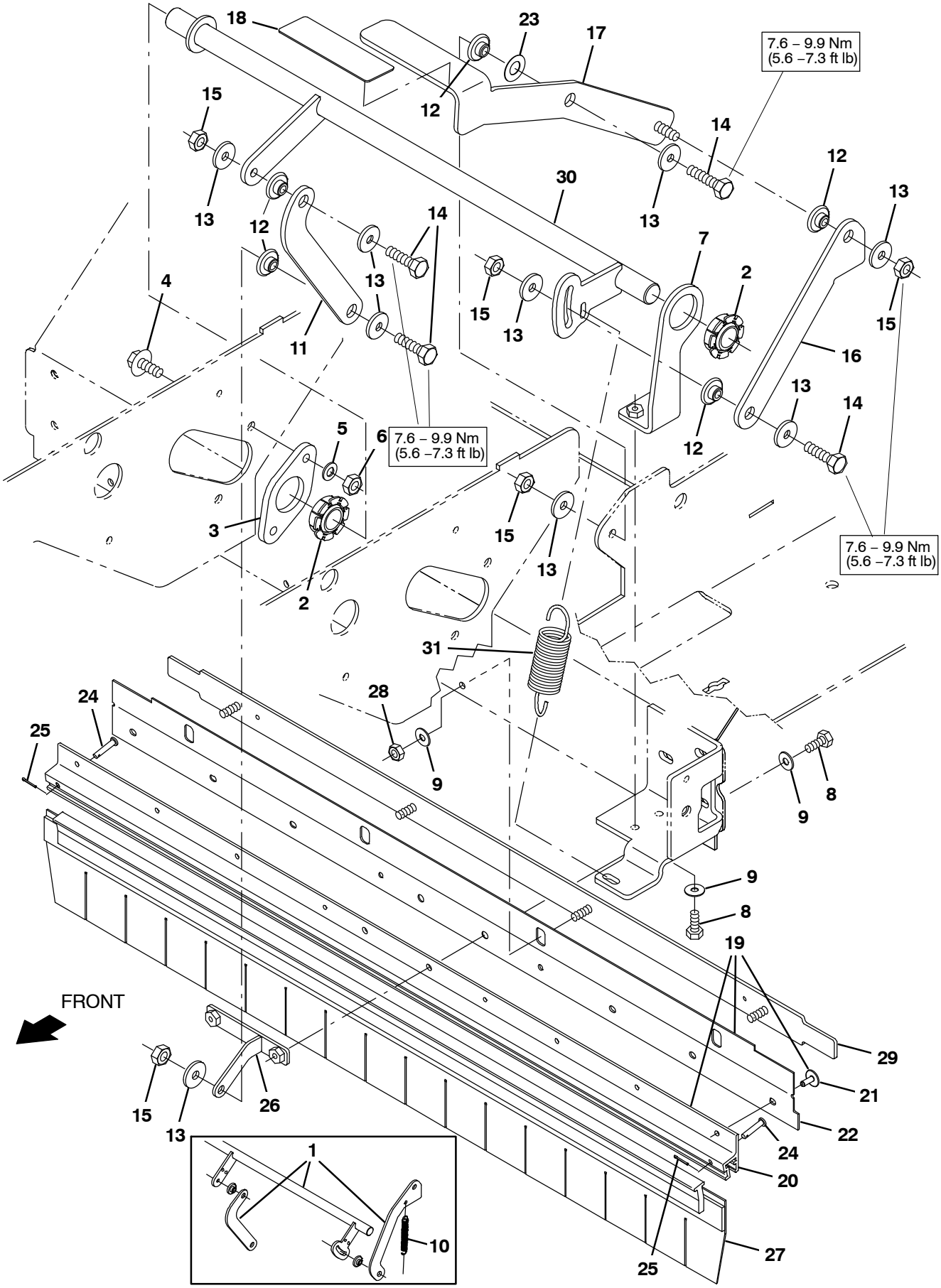

357012 - NA

Fig. 13 – Main Brush Front Flap Group

	Ref.	Part No.	Serial Number	Description	Qty.
	1	9045141	(000000–002130)	Parts Kit, Front Skirt, Linkage (HIGH DUMP)	1
	1	9045141	(000000–001068)	Parts Kit, Front Skirt, Linkage (LOW DUMP)	1
	2	1252424	(000000–)	Bearing, Spherical, 20b	2
	3	1251855	(000000–)	Plate, Brg, Adapter	1
	4	1072628	(000000–)	Screw, Hex, M8 X 1.25 X 25, Ss, Sems	2
	5	39349	(000000–)	Washer, Flat, 0.31, Sae	2
	6	08709	(000000–)	Nut, Hex, Lock, M8 X 1.25, Nl	2
	7	1252923	(000000–)	Bracket Wldt, Mount, Bearing	1
	8	12277	(000000–)	Screw, Hex, M6 X 1.00 X 20, Nl, Ss	4
	9	01684	(000000–)	Washer, Flat, 0.27b 0.69d .05, Ss	8
	10	50304	(000000–002130)	Spring, Extn, 0.50od 0.06wir 04.0l (HIGH DUMP)	1
	10	50304	(000000–001068)	Spring, Extn, 0.50od 0.06wir 04.0l (LOW DUMP)	1
	11	1256189	(002131–)	Plate, Link (HIGH DUMP)	1
	11	1256189	(001069–)	Plate, Link (LOW DUMP)	1
	12	80950	(000000–)	Bushing, Flng, 0.32b 0.50d 0.24l, Bnz	5
	13	1017218	(000000–)	Washer, Flat, 0.32b 1.00d .12, Ss	8
	14	09023	(000000–)	Screw, Hex, M8 X 1.25 X 35, Fl, Ss	4
	15	08713	(000000–)	Nut, Hex, Lock, M8 X 1.25, Nl, Ss	5
	16	1255725	(002131–)	Plate, Link (HIGH DUMP)	1
	16	1255725	(001069–)	Plate, Link (LOW DUMP)	1
▽		9045124	(000000–)	Pedal Kit, Swp, Ci	1
▲	17	1238399	(000000–)	Pedal Wldt, Skirt	1
▲	18	1238454	(000000–)	Pad, Grip	1
▽	19	9045125	(000000–)	Hinge Kt, Swp, Ci	1
▲	20	1252139	(000000–)	Rail, Sl, T	1
▲	21	32548	(000000–)	Rivet, Blind, .188d X 0.45 X .62d, Alm	8
▲	22	1252138	(000000–)	Skirt, Hinge	1
	23	89710	(000000–)	Washer, Flat, 0.51b 1.00d .03, Nyl	1
	24	36191	(000000–)	Pin, Clevis, 0.19d X 1.00l	2
	25	08085	(000000–)	Pin, Cotter, Hair, 0.31d .058 Wir	2
	26	1252419	(000000–)	Bracket, Arm Wldt	1
	27	9045128	(000000–)	Skirt Kit, Front, Swp, Ci	1
	27	9045131	(000000–)	Skirt Kit, Debris, Lrg, Swp, Ci	1
	28	08712	(000000–)	Nut, Hex, Lock, M6 X 1.00, Nl, Ss	4
	29	1253908	(000000–)	Retainer Wldt, Bracket	1
	30	1256190	(002131–)	Shaft Wldt, Crank (HIGH DUMP)	1
	30	1256190	(001069–)	Shaft Wldt, Crank (LOW DUMP)	1

Fig. 14 – Main Brush Skirts Group

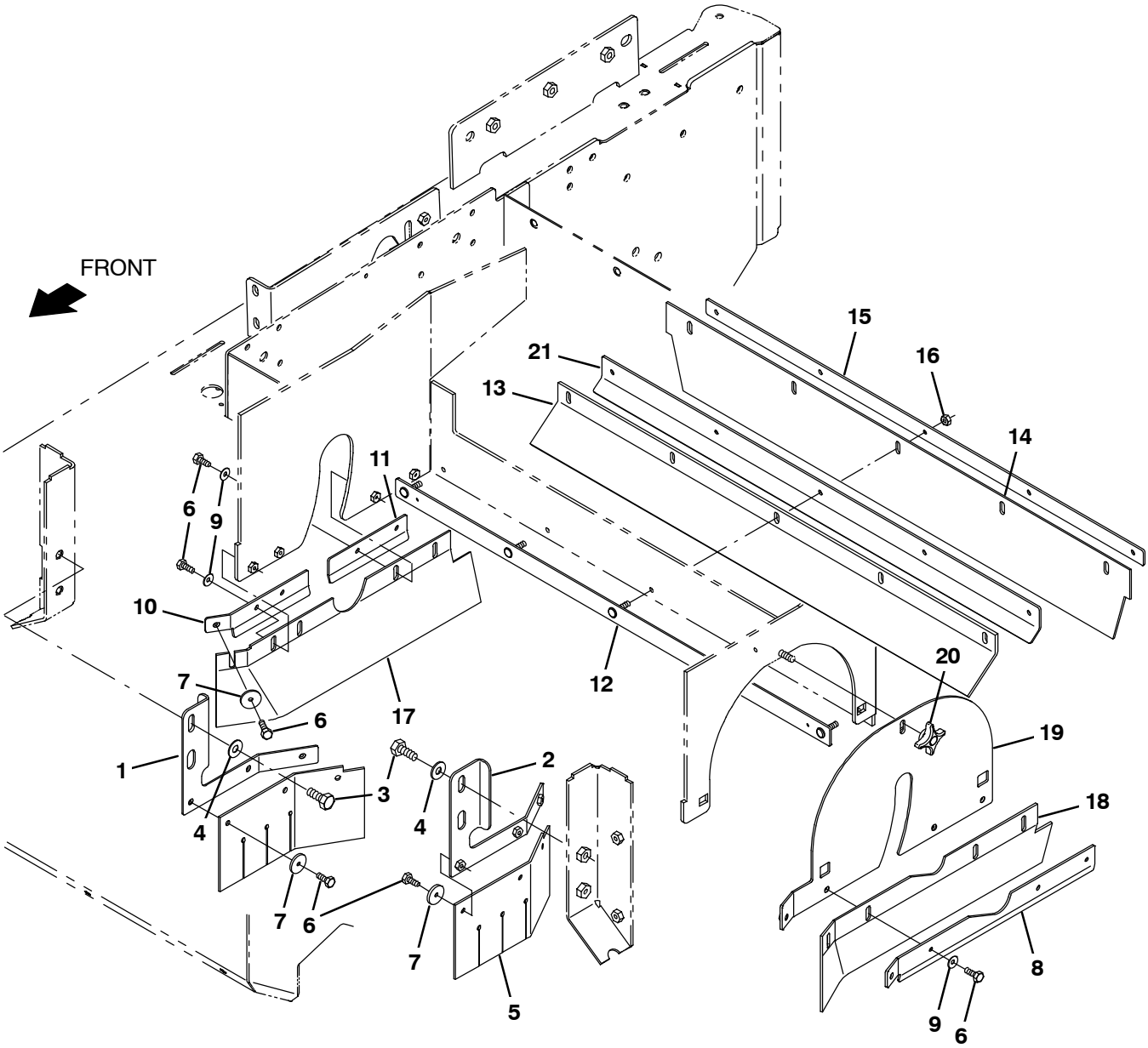

357017

Fig. 14 – Main Brush Skirts Group

Ref.	Part No.	Serial Number	Description	Qty.
1	1252456	(000000–)	Plate Wldt, Skirt, Rh	1
2	1252558	(000000–)	Plate Wldt, Skirt, Lh	1
3	39283	(000000–)	Screw, Hex, M10x1.50x25, 8.8	2
4	32492	(000000–)	Washer, Flat, 0.38, Std	2
5	1252460	(000000–)	Skirt, Swp	2
6	12277	(000000–)	Screw, Hex, M6 X 1.00 X 20, Nl, Ss	15
7	386063	(000000–)	Washer, Flat, 0.25b 1.12d .12, Ss	7
8	1245243	(000000–)	Retainer, Skirt, Lh	1
9	01684	(000000–)	Washer, Flat, 0.27b 0.69d .05, Ss	8
10	1252459	(000000–)	Retainer Wldt, Skirt, Rh	1
11	1245244	(000000–)	Retainer, Skirt, Rh	1
12	1245089	(000000–)	Plate Wldt, Retainer, Skirt	1
13	1244952	(000000–)	Skirt, Recirculation	1
14	1240032	(000000–)	Skirt, Swp, Rear	1
15	1247892	(000000–)	Plate, Retaining, Skirt	1
16	08712	(000000–)	Nut, Hex, Lock, M6 X 1.00, Nl, Ss	5
17	1245246	(000000–)	Skirt, Swp, Rh	1
18	1245247	(000000–)	Skirt, Swp, Lh	1
19	9045127	(000000–)	Door Kit, Idler, Swp, Ci	1
20	1213677	(000000–)	Knob, Star, 2.00od 4ear M8x1.25 [Yel]	1
21	1244951	(000000–)	Bracket, Skirt, Recirculation	1

Fig. 15 – Side Brush Group, Right Hand

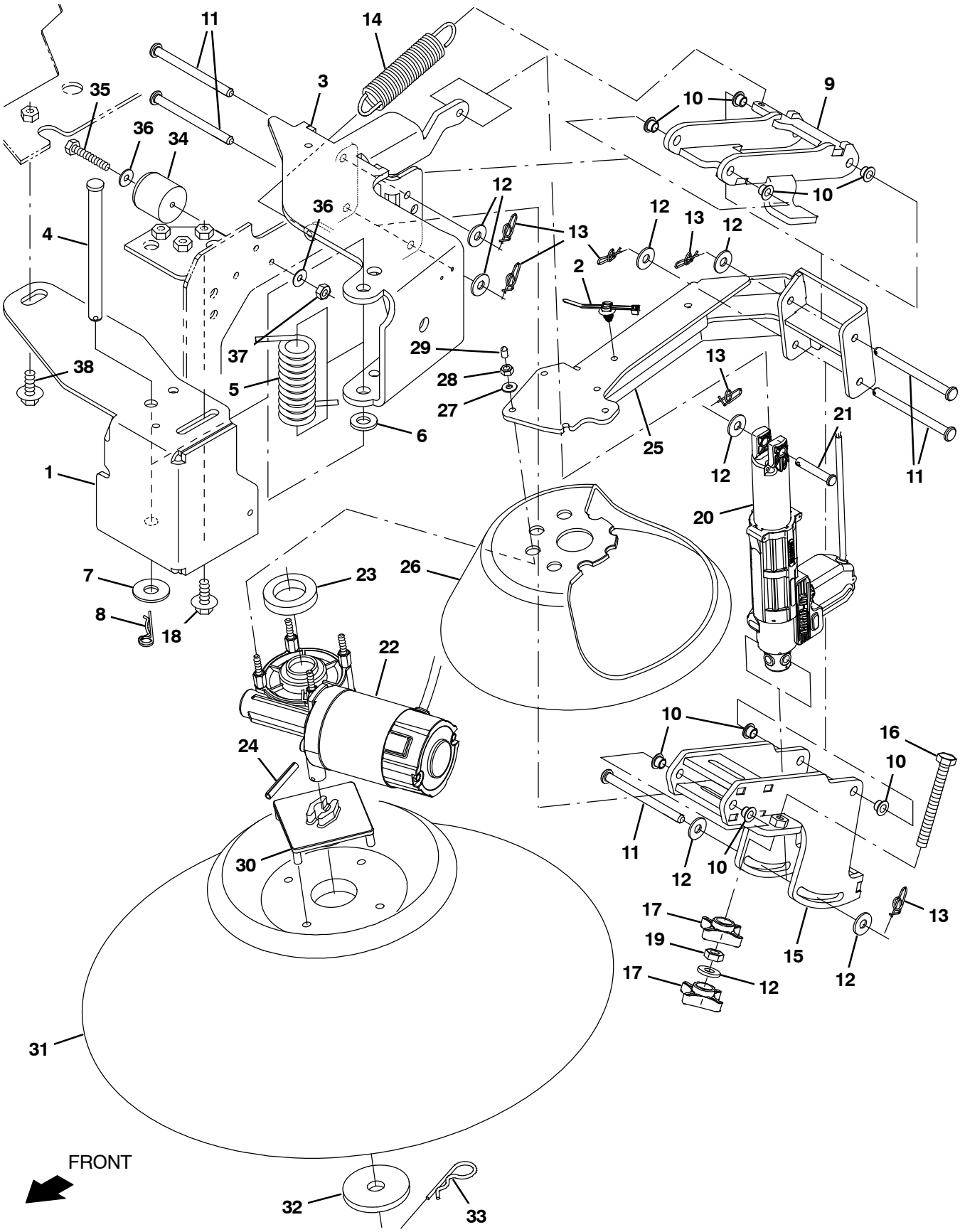

357018

Fig. 14 – Side Brush Group, Right Hand

Ref.	Part No.	Serial Number	Description	Qty.
1	1251985	(000000–)	Bracket, Channel, Brush, Rh	1
2	1210807	(000000–)	Wire, Tie [W/.25” Fir Tree Clip]	7
3	1251987	(000000–)	Bracket Wldt, Brush, Pivot, Rh	1
4	51225–1	(000000–)	Pin, Clevis, 0.50d X 6.00l	1
5	1251331	(000000–)	Spring, Tors, 0.87id .25wir 13.0coil, Rh	1
6	140127	(000000–)	Washer, Thrust, 0.51b 1.00d 0.12w, Brz	1
7	41619	(000000–)	Washer, Flat, 0.56b 1.38d .11, Ss	1
8	44906	(000000–)	Pin, Cotter, Hair, 0.38d .093 Wir	1
9	1256529	(000000–)	Arm Wldt, Upper, Link, Rh	1
10	1251107	(000000–)	Bushing, Flng, 8mmb 10mmd 7.5mml	8
11	1252353	(000000–)	Pin, Clevis, 8mmd X 100mml [304ss]	5
12	01685	(000000–)	Washer, Flat, 0.38b 0.88d .08, Ss	8
13	1216647	(000000–)	Pin, Cotter, Hair, 0.38d .054 Wir	6
14	1252317	(000000–)	Spring, Extn, 1.05od 0.13wir 5.00l	1
15	1251994	(000000–)	Lift Wldt, Lower, Link, Rh	1
16	1014163	(000000–)	Screw, Hex, M8 X 1.25 X 60, Fl, Ss	1
17	1213677	(000000–)	Knob, Star, 2.00od 4ear M8x1.25 [Yel]	2
18	1072628	(000000–)	Screw, Hex, M8 X 1.25 X 25, Ss, Sems	3
19	200101017	(000000–)	Nut, Hex, Jam, M8 X 1.25	1
20	1237208	(000000–)	Actuator, 36vdc, 60mm Stroke	1
21	81581	(000000–)	Pin, Clevis, 0.31d X 1.75l	1
22	1245910	(000000–)	Motor, Ele, 36vdc 0070rpm 0.16hp Gear	1
23	1250678	(000000–)	Spacer, Brush	1
24	11398	(000000–)	Pin, Roll, .250d X 2.00l, .250/.256	1
25	1251997	(000000–)	Motor Wldt, Mtg, Brush, Rh	1
26	1238366	(000000–)	Guard, Brush, Side	1
27	19066	(000000–)	Washer, Flat, 0.25b 0.56d .05, Pl, 10	4
28	06549	(000000–)	Nut, Hex, M5 X 0.80 X 16, 8.8	4
29	1227460	(000000–)	Cover, Thread, M5	4
30	1017441	(000000–)	Plate, Adapter, Brush	1
31	1225549	(000000–)	Brush, Disk, Swp, 20.0d, Polypropylene	1
32	1248278	(000000–)	Washer, Flat, 0.66b 2.50d .12, Ss	1
33	02942	(000000–)	Pin, Hair, Cotter, 0.62d .120 Wir	1
34	44851	(000000–)	Bumper, Rbr, 1.5d 1.50th 0.28h	1
35	06948	(000000–)	Screw, Hex, M6 X 1.00 X 45, 8.8	1
36	01684	(000000–)	Washer, Flat, 0.27b 0.69d .05, Ss	2
37	08712	(000000–)	Nut, Hex, Lock, M6 X 1.00, Nl, Ss	1

Fig. 16 – Hopper Group, Low Dump

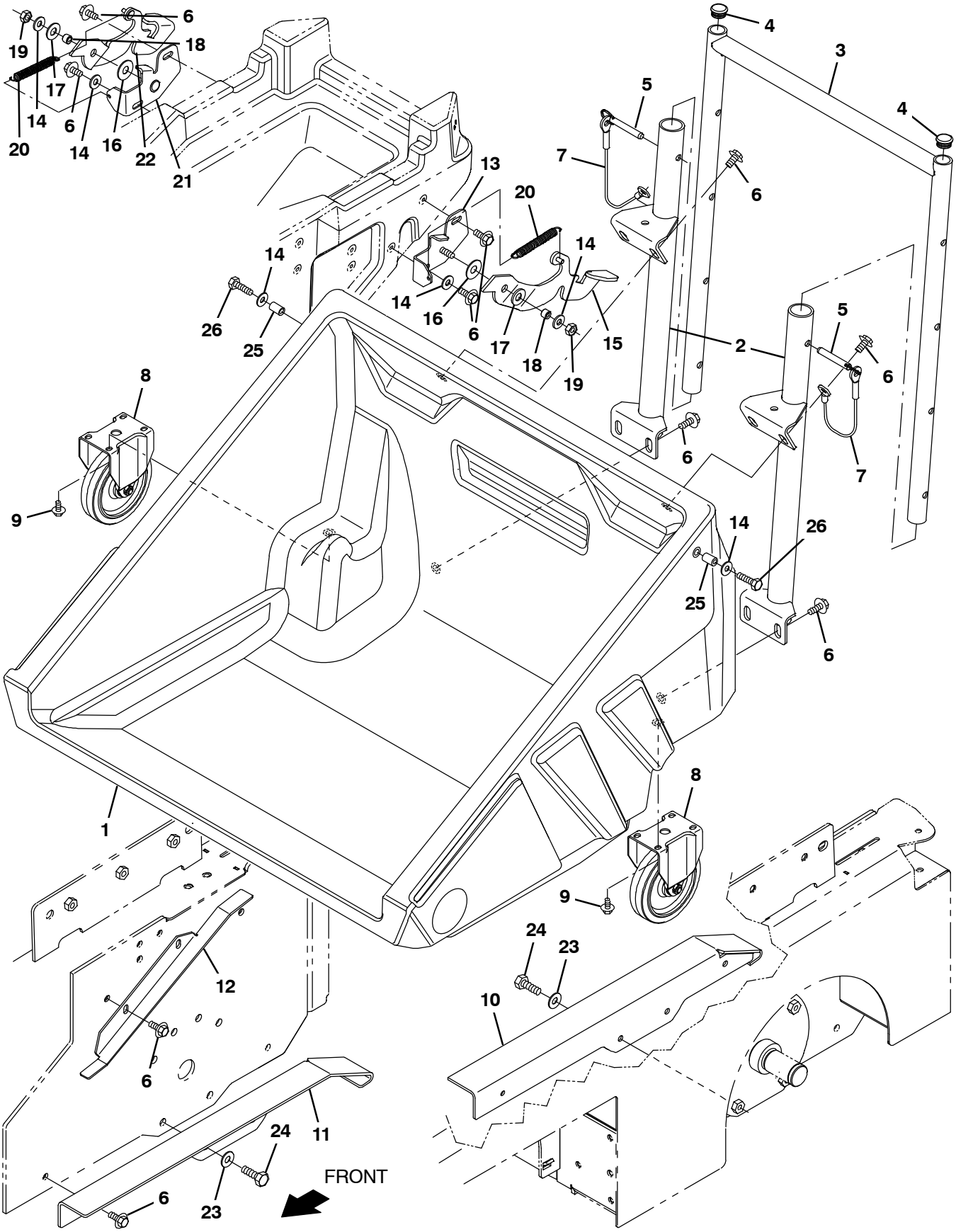

357020

Fig. 16 – Hopper Group, Low Dump

Ref.	Part No.	Serial Number	Description	Qty.
1	9045174	(000000–)	Hopper Kit, Low Dump, Ci [S16 Na]	1
1	9045185	(000000–)	Hopper Kit, Low Dump, Ci [S16 Jp]	1
2	1242075	(000000–)	Tube Wldt, Base	2
3	1244929	(000000–)	Handle, Tube, Wldt	1
4	1245060	(000000–)	Cap, Tube, 1.0	2
5	1242563	(000000–)	Pin, Hitch, .375d X 1.80l, Ss	2
6	1072628	(000000–)	Screw, Hex, M8 X 1.25 X 25, Ss, Sems	13
7	19676	(000000–)	Cable, Glv .09d 013.0l .38eye /.38eye	2
8	1239136	(000000–)	Wheel, Caster, 5.0 D, Non Swivel	2
9	1034731	(000000–)	Screw, Hex, M6 X 1.00 X 16, Sems, Ss	8
10	1236950	(000000–)	Bracket, Sppt, Hopper, Lh	1
11	1238648	(000000–)	Bracket, Sppt, Hopper, Rh	1
12	1237171	(000000–)	Bracket, Guide, Hppr	1
13	1247402	(000000–)	Plate Wldt, Spring, Latch, Lh	1
14	32491	(000000–)	Washer, Flat, 0.31, Std	4
15	1253870	(000000–)	Latch, Swing, Lh	1
16	86952	(000000–)	Washer, Flat, 0.52b 1.25d .06, Nyl	2
17	32486	(000000–)	Washer, Flat, 0.53b 1.06d .10, Stl, Pl	2
18	1028690	(000000–)	Tube, 0.32id 0.50od 00.4l, Ss	2
19	08713	(000000–)	Nut, Hex, Lock, M8 X 1.25, Nl, Ss	2
20	50304	(000000–)	Spring, Extn, 0.50od 0.06wir 04.0l	2
21	1247470	(000000–)	Plate Wldt, Spring, Latch, Rh	1
22	1253773	(000000–)	Latch, Swing, Rh	1
23	32492	(000000–)	Washer, Flat, 0.38, Std	4
24	39284	(000000–)	Screw, Hex, M10 X 1.50 X 35, 8.8	4
25	51562	(000000–)	Tube, 0.33id 0.51od 00.8l, Stl, Pl	2
26	59658	(000000–)	Screw, Hex, M8 X 1.25 X 35, Nl, Ss	2

Fig. 17 – Hopper Filter Box Cover Group

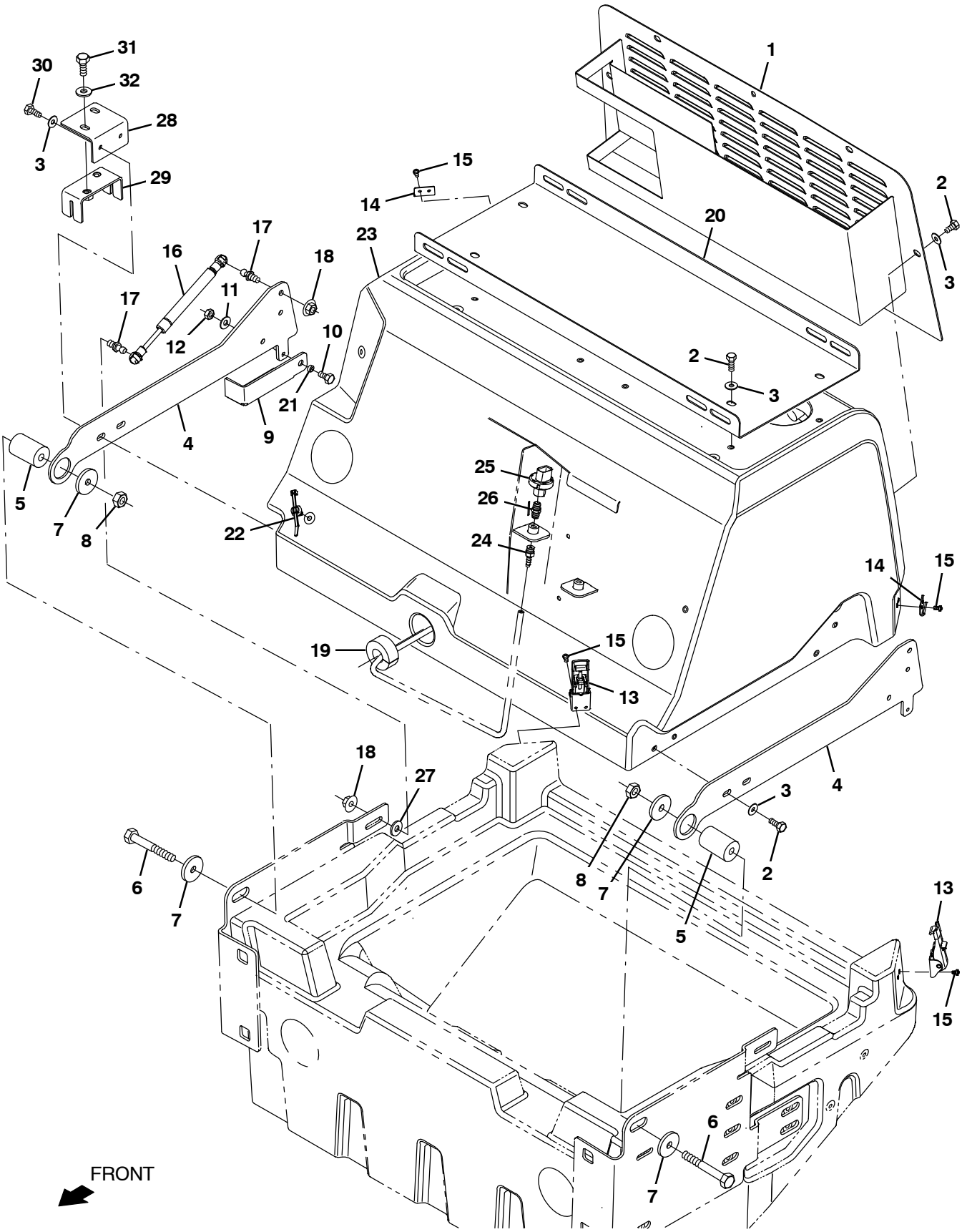

357007

Fig. 17 – Hopper Filter Box Cover Group

Ref.	Part No.	Serial Number	Description	Qty.
1	1248708	(000000–)	Cover Wldt, Louvered	1
2	11635	(000000–)	Screw, Hex, M6 X 1.00 X 12, Nl, Ss	16
3	01684	(000000–)	Washer, Flat, 0.27b 0.69d .05, Ss	16
4	1249821	(000000–)	Bracket, Pivot, Cover	2
5	1249550	(000000–)	Shaft, Pivot	2
6	06965	(000000–)	Screw, Hex, M10 X 1.50 X 80, 8.8	2
7	36996	(000000–)	Washer, Flat, 0.41b 1.50d .19, Stl, Pl	4
8	41430	(000000–)	Nut, Hex, Lock, M10 X 1.5, Nl	2
9	1248212	(000000–)	Arm, Prop	1
10	06942	(000000–)	Screw, Hex, M6 X 1.00 X 16, 8.8	1
11	32490	(000000–)	Washer, Flat, 0.25, Std	1
12	08708	(000000–)	Nut, Hex, Lock, M6 X 1.00, Nl	1
13	1222018	(000000–)	Latch, Door, Yel	2
14	384419	(000000–)	Bracket, Latch, Keeper [Southco]	2
15	06925	(000000–)	Screw, Pan, Phl, M4 X 0.70 X 6, 4.8	8
16	1245866	(000000–)	Gasspring, 90lb, 3.15strk	1
17	1205551	(000000–)	Stud, Ball, 10mm Ball, M8x1.25 Stud	2
18	07791	(000000–)	Nut, Hex, Flng, M8 X 1.25	2
19	1244419	(000000–)	Seal, Foam	1
20	1246162	(000000–)	Plate, Cover	2
21	80491	(000000–)	Sleeve, P/M, 0.25b 0.38d 0.2l [430ss]	1
22	1210807	(000000–)	Wire, Tie [W/.25” Fir Tree Clip]	1
23	9045191	(000000–)	Cover, Filterbox, Afmkt [S16]	1
24	40607	(000000–)	Fitting, Brs, Str, Bm03/Pm02	1
25	1238155	(000000–)	Sensor, Press, 5.0 Inch	1
26	1238921	(000000–)	Fitting, Brs, Pm02/Pm02, W/ Fltr	1
27	32491	(000000–)	Washer, Flat, 0.31, Std	1
28	1256047	(000000–)	Plate, Mtg, Block	1
29	1256080	(000000–)	Plate Wldt, Adjmt	1
30	11329	(000000–)	Screw, Hex, M6 X 1.00 X 16, Nl, Ss	2
31	16931	(000000–)	Screw, Hex, M8 X 1.25 X 20, 8.8	2
32	01685	(000000–)	Washer, Flat, 0.38b 0.88d .08, Ss	2

Fig. 18 – Hopper Vacuum Fan Group

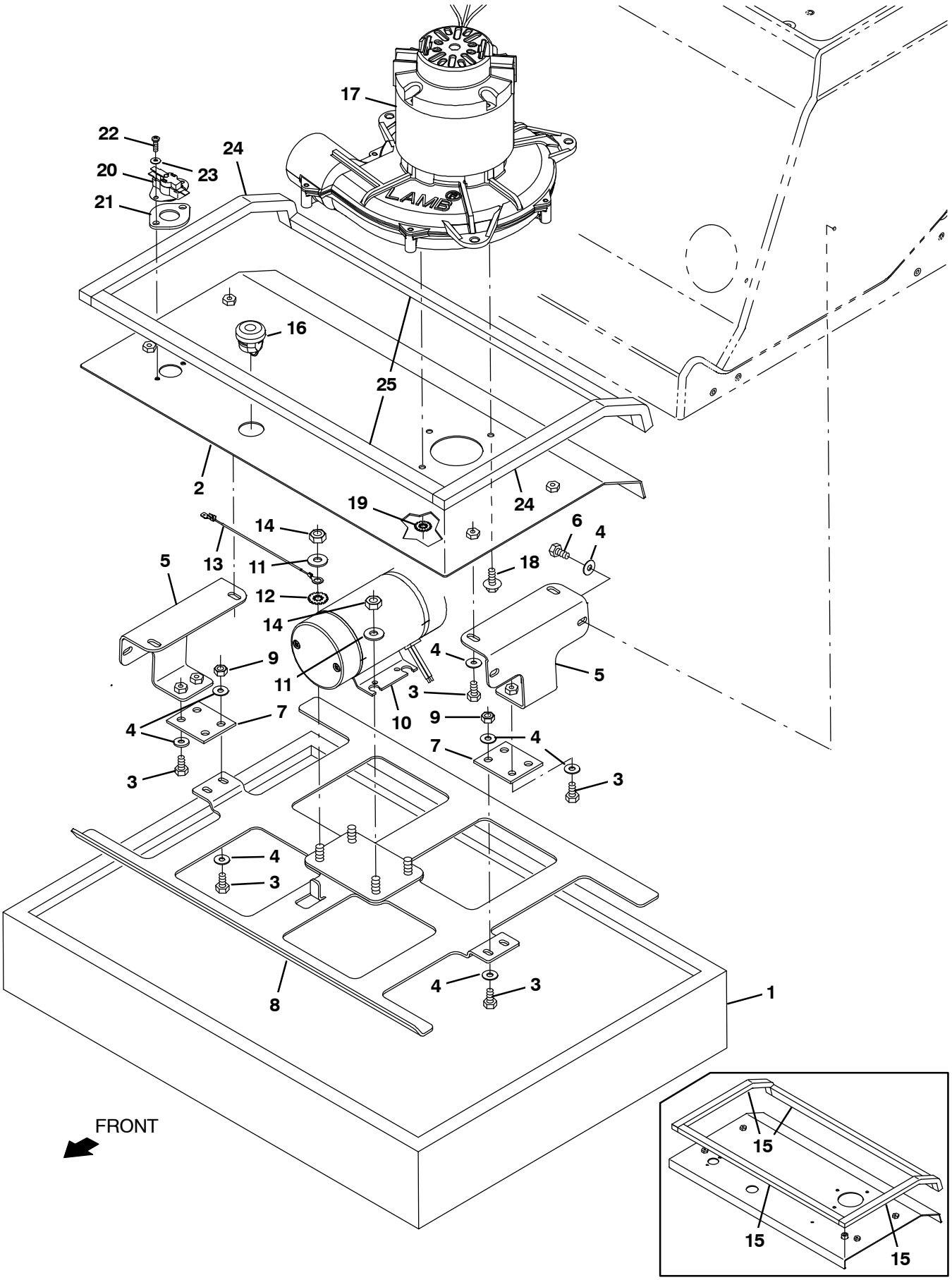

357005 - NA

Fig. 18 - Hopper Vacuum Fan Group

	Ref.	Part No.	Serial Number	Description	Qty.
	1	1238116	(000000-)	Filter, Dust, Panel 4.2 X 19.2 X 26.0	1
	2	1240955	(000000- 002144)	Plate Wldt, Mtg, Fan (HIGH DUMP)	1
	2	1256091	(002145-)	Plate Wldt, Mtg, Fan (HIGH DUMP)	1
	2	1240955	(000000- 001075)	Plate Wldt, Mtg, Fan (LOW DUMP)	1
	2	1256091	(001076-)	Plate Wldt, Mtg, Fan (LOW DUMP)	1
	3	11329	(000000-)	Screw, Hex, M6 X 1.00 X 16, Nl, Ss	12
	4	01684	(000000-)	Washer, Flat, 0.27b 0.69d .05, Ss	16
	5	1238507	(000000-)	Bracket Wldt, Shakr, Mtg	2
	6	11635	(000000-)	Screw, Hex, M6 X 1.00 X 12, Nl, Ss	4
	7	1235145	(000000-)	Hinge, Shaker	2
	8	1235128	(000000-)	Plate Wldt, Shakr, Fltr	1
	9	08708	(000000-)	Nut, Hex, Lock, M6 X 1.00, Nl	4
	10	1241947	(000000-)	Motor, Ele, 36vdc, Shakr, Ul	1
	11	32491	(000000-)	Washer, Flat, 0.31, Std	3
	12	41141	(000000-)	Washer, Lock, Int- Ext, 0.31	1
	13	1074344	(000000-)	Harness, Ele [Ring With .250m Tail]	1
	14	08713	(000000-)	Nut, Hex, Lock, M8 X 1.25, Nl, Ss	4
	15	1046422	(000000- 002144)	Seal, Afmkt, Rbr, Open, Adh, 08ft (HIGH DUMP)	1
	15	1046422	(000000- 001075)	Seal, Afmkt, Rbr, Open, Adh, 08ft (LOW DUMP)	1
	16	1051199	(000000-)	Strainrelief	1
▽	17	1215180	(000000-)	Fan, Vacuum, 8.7d, 036vdc, 1 Stage	1
▲		1254664	(000000-)	Brush Kit, Motor, Fan	1
	18	1034731	(000000-)	Screw, Hex, M6 X 1.00 X 16, Sems, Ss	4
	19	41140	(000000-)	Washer, Lock, Int- Ext, 0.25	1
	20	367679	(000000-)	Switch, Thermal, 160deg, Spdt	1
	21	82733	(000000-)	Gasket, Sensor, Thermal	1
	22	06927	(000000-)	Screw, Pan, Phl, M4 X 0.70 X 16, 4.8	2
	23	19065	(000000-)	Washer, Flat, 0.19b 0.44d .05, Pl, 08	2
	24	1255523	(002145-)	Seal, Ure, 0.50, 0.75w, 17.0l Adh (HIGH DUMP)	2
	24	1255523	(001076-)	Seal, Ure, 0.50, 0.75w, 17.0l Adh (LOW DUMP)	2
	25	1255524	(002145-)	Seal, Ure, 0.50, 0.75w, 21.0l Ad (HIGH DUMP)	2
	25	1255524	(001076-)	Seal, Ure, 0.50, 0.75w, 21.0l Ad (LOW DUMP)	2

Fig. 19 – Hopper Filter Box Housing Group

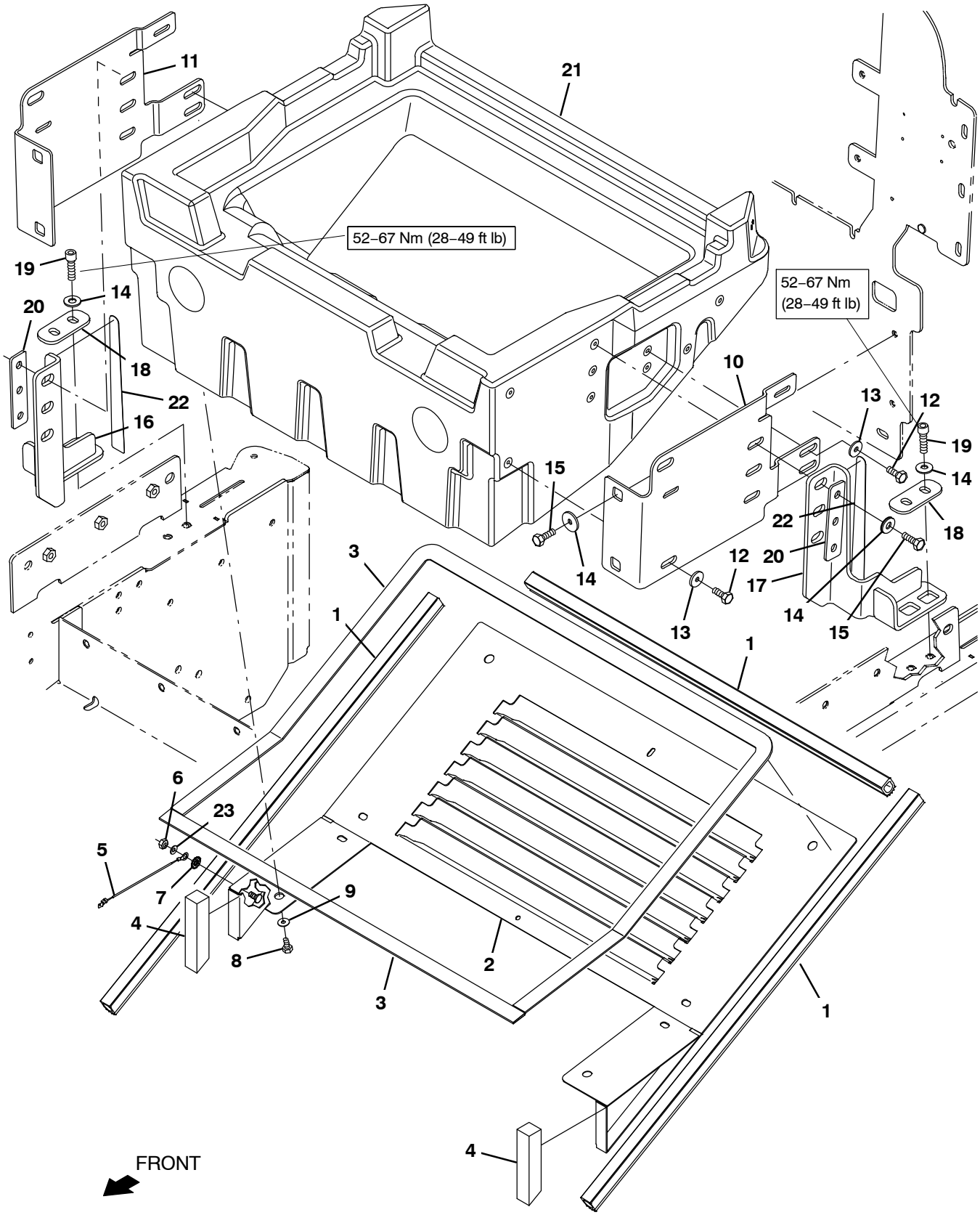

357008

Fig. 19 – Hopper Filter Box Housing Group

Ref.	Part No.	Serial Number	Description	Qty.
1	1227096	(000000–)	Seal, Afmkt, Bulb, Str, 1.12, 0.88w 08ft	1
2	1239703	(000000–)	Plate Wldt, Permafilter	1
3	1255026	(000000–)	Seal, Afmkt, Rbr, Clsd, Adh, 08ft	1
4	1239057	(000000–)	Seal, Foam, 1.00 1.00w 5.0l	2
5	1074344	(000000–)	Harness, Ele [Ring With .250m Tail]	1
6	08708	(000000–)	Nut, Hex, Lock, M6 X 1.00, Nl	1
7	41140	(000000–)	Washer, Lock, Int–Ext, 0.25	1
8	09744	(000000–)	Screw, Hex, M6 X 1.00 X 12, Ss	10
9	01684	(000000–)	Washer, Flat, 0.27b 0.69d .05, Ss	10
10	1249631	(000000–)	Bracket, Mtg, Hsng, Lh	1
11	1249633	(000000–)	Bracket, Mtg, Hsng, Rh	1
12	12273	(000000–)	Screw, Hex, M8 X 1.25 X 20, Nl, Ss	8
13	1017218	(000000–)	Washer, Flat, 0.32b 1.00d .12, Ss	8
14	32492	(000000–)	Washer, Flat, 0.38, Std	14
15	03192	(000000–)	Screw, Hex, M10 X 1.50 X 30, 8.8	14
16	1247096	(000000–)	Stop Wldt, Rh	1
17	1245127	(000000–)	Stop Wldt, Lh	1
18	1247076	(000000–)	Plate, Washer	2
19	41358	(000000–)	Screw, Soc, M10 X 1.50 X 35, 12.9	4
20	1252842	(000000–)	Plate, Washer	2
21	9045190	(000000–)	Housing, Fltr, Afmkt [S16]	1
22	1255971	(000000–)	Pad Set, Wear	1
23	19066	(000000–)	Washer, Flat, 0.25b 0.56d .05, Pl, 10	1

Fig. 20 – Hopper Group, High Dump

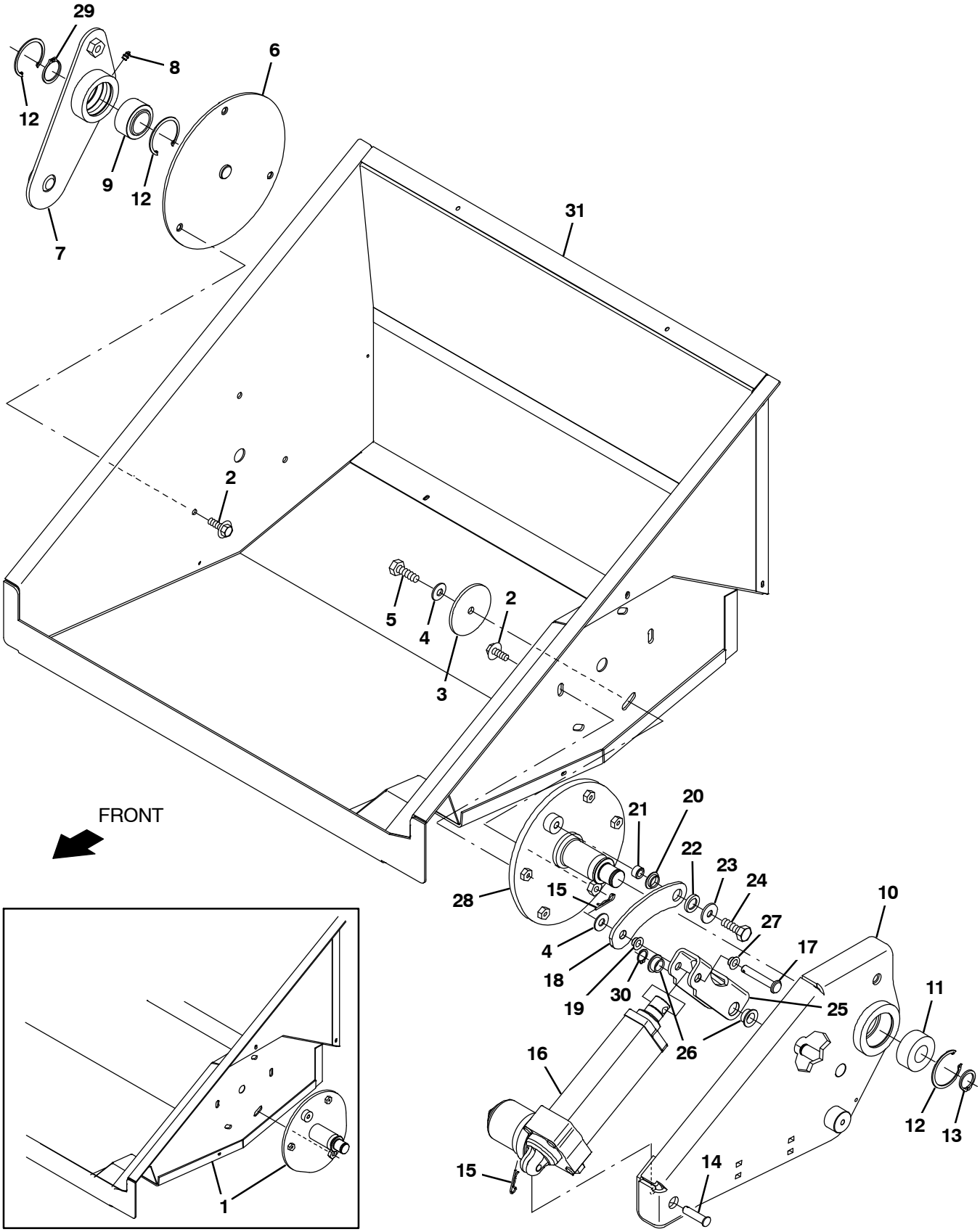

357010 - NA

Fig. 20 – Hopper Group, High Dump

	Ref.	Part No.	Serial Number	Description	Qty.
	1	9045188	(000000–002108)	Parts Kit, Hppr, Replmt	1
	2	1020341	(000000–)	Screw, Hex, M8 X 1.25 X 20, Ss, Sems	7
	3	1248652	(000000–)	Plate, Hppr, Pivot	1
	4	32492	(000000–)	Washer, Flat, 0.38, Std	1
	5	09028	(000000–)	Screw, Hex, M10 X 1.50 X 25, Ss	1
	6	1236758	(000000–)	Pivot Wldt	1
▽		9045170	(000000–)	Hopper Kit, Roll Wldt, Rh, Ci	1
▲	7	1236500	(000000–)	Plate Wldt, Mtg, Hppr, Rh	1
▲	8	07259	(000000–)	Fitting, Grease, Str Pm04 .47l	1
▲	9	42120–1	(000000–)	Bearing, Self Align, 1.25b 2.00d	1
▽		9045152	(000000–)	Hopper Kit, Roll Wldt, Lh, Ci	1
▲	10	1236501	(000000–)	Plate Wldt, Mtg, Hppr, Lh	1
▲	11	1217080	(000000–)	Bearing, Ball, 1.00b 2.05d .811w 2row	1
	12	59542	(000000–)	Ring, Retaining, Int, 2.00d	3
	13	386962	(000000–)	Ring, Retaining, Ext, 1.00d	1
	14	1009356	(000000–)	Pin, Clevis, 10mmd X 040mml	1
	15	86866	(000000–)	Pin, Cotter, Hair, 0.38d .072 Wir	2
	16	1237883	(000000–)	Actuator, 36vdc, 05.0strk, 900lb	1
	17	1252361	(000000–)	Pin, Clevis, 10mmd X 60mml [304ss]	1
▽		9045172	(000000–)	Hopper Kit, Link, Roll, Ci	1
▲	18	1236687	(000000–)	Plate, Coupler	1
▲	19	1250579	(000000–)	Bushing, Flng, 10mmb 12mmd 7mml	1
▲	20	1238839	(000000–)	Bushing, Flng, 16mmb 18mmd 6mml	1
	21	1250601	(000000–)	Sleeve, 10.1mmb 16.0mmd 9.5mml	1
	22	1238844	(000000–)	Washer, Flat, 0.67b 1.00d .13l, Nyl	1
	23	1014563	(000000–)	Washer, Flat, 0.40b 1.12d .12, Ss	1
	24	09770	(000000–)	Screw, Hex, M10 X 1.50 X 25, Nl, Ss	1
▽		9045171	(000000–)	Hopper Kit, Link, Roll, Ci	1
▲	25	1236686	(000000–)	Plate, Follower	1
▲	26	25735	(000000–)	Bushing, Flng, 0.63b 0.75d 0.38l	2
▲	27	1250579	(000000–)	Bushing, Flng, 10mmb 12mmd 7mml	1
	28	1255834	(002109–)	Pivot Wldt, Lh	1
	29	58359	(000000–)	Retainer, Ring	1
	30	1256494	(002109–)	Hopper Wldt	1

Fig. 21 – Hopper Lift Arms Group, High Dump

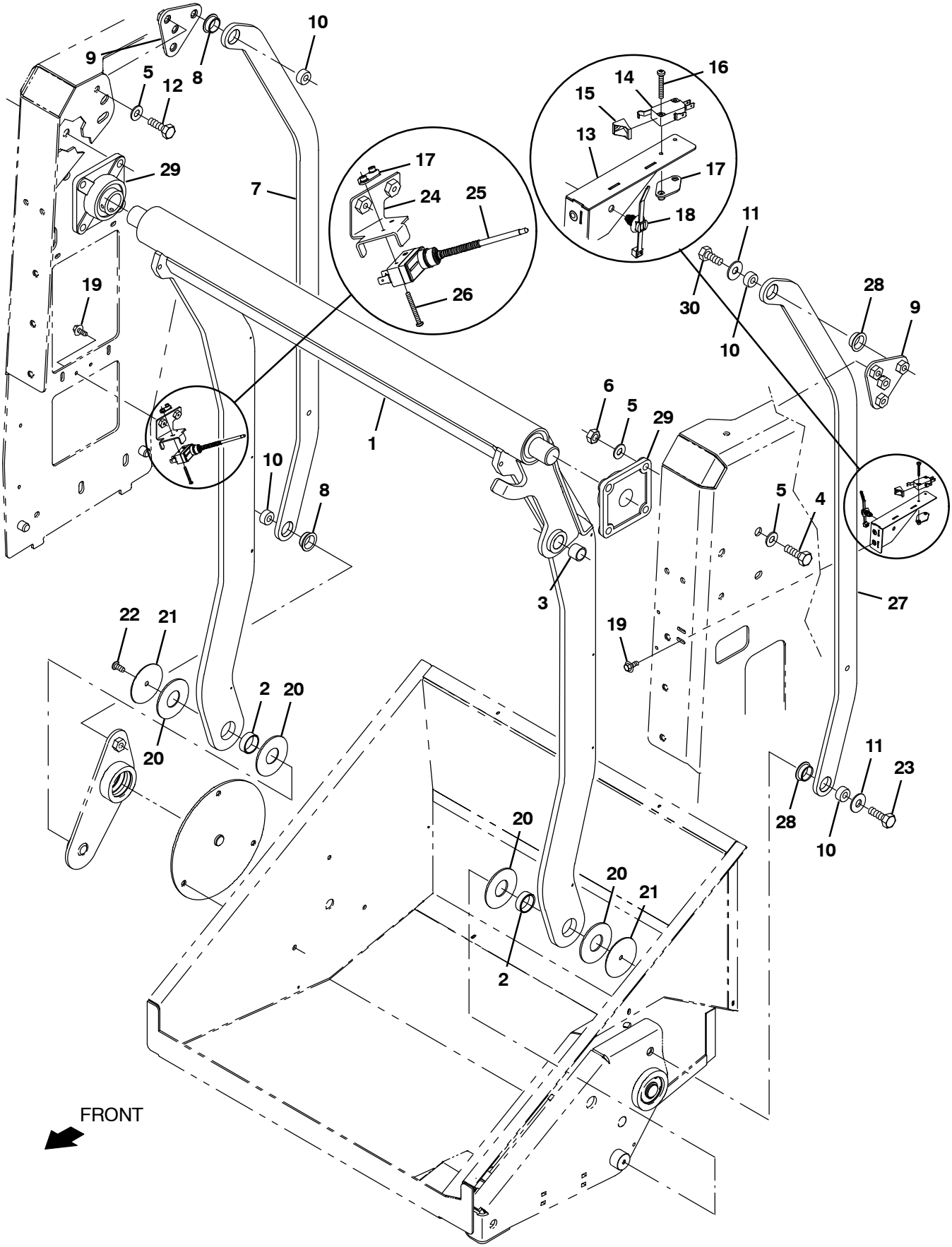

357006

Fig. 21 – Hopper Lift Arms Group, High Dump

	Ref.	Part No.	Serial Number	Description	Qty.
▽	1	9045151	(000000–)	Hopper Kit, Arm, Lower, Ci [S16 Na]	1
▲	2	1238976	(000000–)	Bushing, Sleeve, 1.25b 1.41d 0.50l	2
▲	3	364587	(000000–)	Bushing, Sleeve, 0.88b 1.00d 0.75l, Bnz	1
▽	1	9045180	(000000–)	Hopper Kit, Arm, Lower, Ci [S16 Jp]	1
▲	2	1238976	(000000–)	Bushing, Sleeve, 1.25b 1.41d 0.50l	2
▲	3	364587	(000000–)	Bushing, Sleeve, 0.88b 1.00d 0.75l, Bnz	1
	4	06969	(000000–)	Screw, Hex, M12 X 1.75 X 40, 8.8	8
	5	32486	(000000–)	Washer, Flat, 0.53b 1.06d .10, Stl, Pl	22
	6	08711	(000000–)	Nut, Hex, Lock, M12 X 1.75, Nl	8
▽		9045153	(000000–)	Hopper Kit, Arm, Upper, Rh, Ci	1
▲	7	1237856	(000000–)	Arm, Lift, Upper	1
▲	8	1247766	(000000–)	Bushing, Flng, 25.0mmb 28.0mmd 11.0mml	2
	9	1238420	(000000–)	Plate Wldt, Tower, Adj	2
	10	1241180	(000000–)	Sleeve, 25.0mmd 12.2mmb 11.8mml	4
	11	32493	(000000–)	Washer, Flat, 0.56b 1.38d .11, Stl, Pl	2
	12	41346	(000000–)	Screw, Hex, M12 X 1.75 X 30, 8.8	6
	13	1246828	(000000–)	Switch Wldt, Hppr	1
	14	1215716	(000000–)	Switch, 0.1a, Spdt[Micro, Gold Contacts]	1
	15	600372	(000000–)	Boot, Switch	1
	16	06922	(000000–)	Screw, Pan, Phl, M3 X 0.50 X 20, 4.8	2
	17	1013705	(000000–)	Plate, Thread, Switch, M3 Nut, 96hr Pl	2
	18	1210807	(000000–)	Wire, Tie [W/.25” Fir Tree Clip]	1
	19	1034731	(000000–)	Screw, Hex, M6 X 1.00 X 16, Sems, Ss	2
	20	384306	(000000–)	Washer, Flat, 1.26b 3.00d .12, Pye	2
	21	1236882	(000000–)	Plate, Retainer	2
	22	17284	(000000–)	Screw, Btn, M8 X 1.25 X 16, Ss	2
	23	06968	(000000–)	Screw, Hex, M12 X 1.75 X 35, 8.8	1
	24	1250313	(000000–)	Bracket Wldt, Mtg, Switch	1
	25	1246200	(000000–)	Switch, Wobble, Spdt, 250vac, 15a	1
	26	06924	(000000–)	Screw, Pan, Phl, M3 X 0.50 X 30, 4.8	2
▽		9045154	(000000–)	Hopper Kit, Arm, Upper, Lh, Ci	1
▲	27	1237856	(000000–)	Arm, Lift, Upper	1
▲	28	1247766	(000000–)	Bushing, Flng, 25.0mmb 28.0mmd 11.0mml	2
	29	1236479	(000000–)	Bearing, Flng, 4hole, 35mmb	2
	30	06968	(000000–)	Screw, Hex, M12 X 1.75 X 35, 8.8	2

Fig. 22 – Hopper Hydraulic Lift Cylinder Group, High Dump

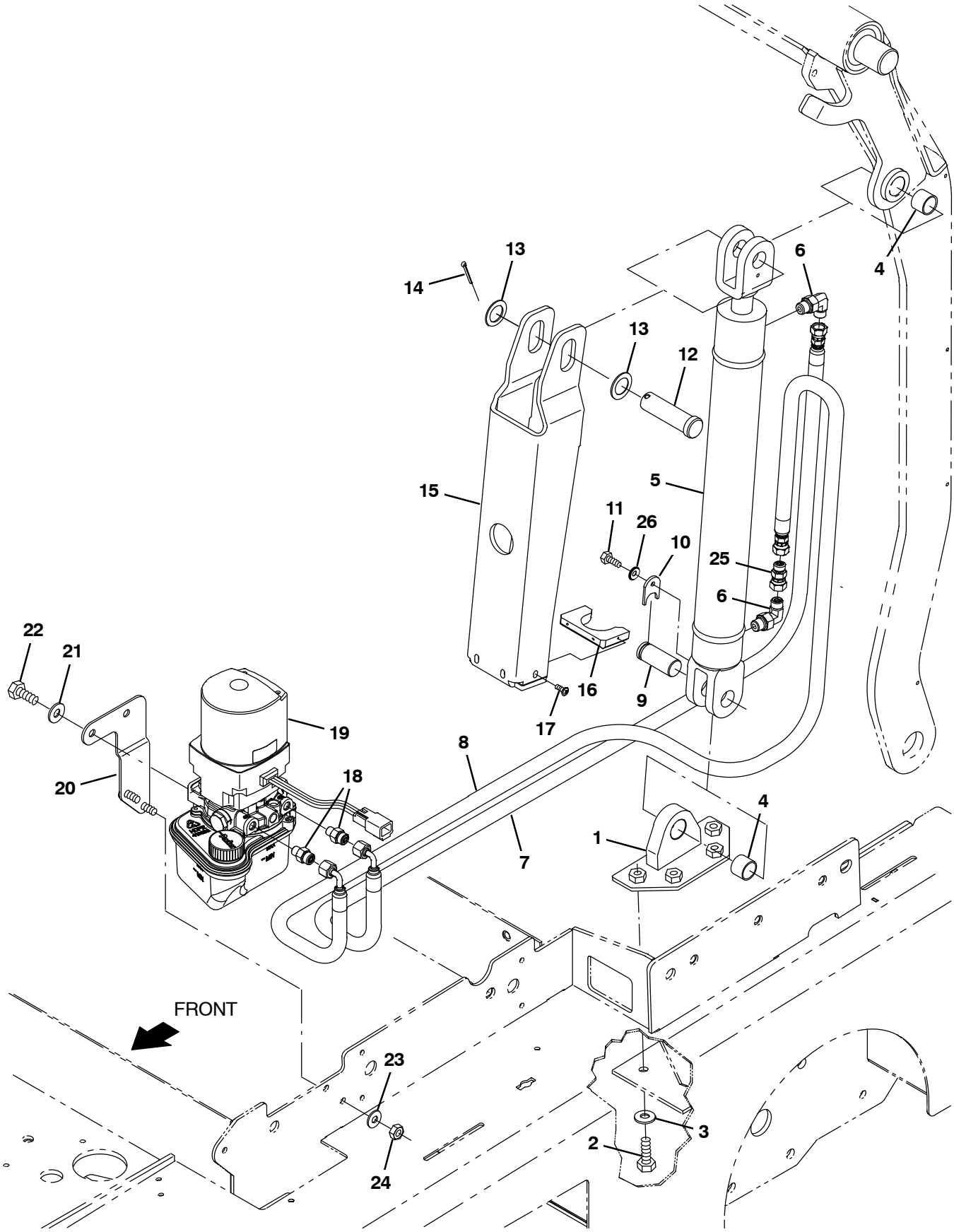

357001

Fig. 22 – Hopper Hydraulic Lift Cylinder Group, High Dump

	Ref.	Part No.	Serial Number	Description	Qty.
▽		9045173	(000000–)	Hopper Kit, Lug, Cyl, Ci	1
▲	1	1238415	(000000–)	Plate, Cyl, Mount	1
▲	2	364587	(000000–)	Bushing, Sleeve, 0.88b 1.00d 0.75l, Bnz	1
	3	03192	(000000–)	Screw, Hex, M10 X 1.50 X 30, 8.8	4
	4	1067059	(000000–)	Fitting, Hyd, Rst, Fm04/Of04, .047	1
	5	1029646	(000000–)	Cylinder, Hyd, 2.0b 24.1l 15.00strk 3000	1
	6	762425	(000000–)	Fitting, Hyd, E90, Fm04/Om06	2
	7	1243991	(000000–)	Hose, Hyd, Med04, Of04e90/Of04str, 046.8	1
	8	1243989	(000000–)	Hose, Hyd, Med04, Of04e90/Of04str, 059.3	1
	9	1255527	(000000–)	Pin, 0.87d 02.1l ,Stl	1
	10	1255515	(000000–)	Plate, Keeper	1
	11	06942	(000000–)	Screw, Hex, M6 X 1.00 X 16, 8.8	2
	12	1242063	(000000–)	Pin, Clevis, 0.88d X 3.00l	1
	13	82226	(000000–)	Washer, Flat, 0.91b 1.38d .06, Stl, Pl	2
	14	08175	(000000–)	Pin, Cotter, .125 X 1.25	1
	15	1238583	(000000–)	Plate, Safety, Cyl	1
	16	383940	(000000–)	Guide, Cyl	1
	17	360973	(000000–)	Screw, Pan, Phl, 12–16 X 0.50, F/ Plstc	4
	18	762428	(000000–)	Fitting, Hyd, Str, Fm04/Om04	1
	19	1244110	(000000–)	Pump, Hyd, 36vdc, Isolated	1
	20	1239488	(000000–)	Bracket, Hyd	1
	21	01686	(000000–)	Washer, Flat, 0.44b 1.00d .08, Ss	2
	22	06921	(000000–)	Screw, Pan, Phl, M3 X 0.50 X 16, 4.8	2
	23	01685	(000000–)	Washer, Flat, 0.38b 0.88d .08, Ss	2
	24	08713	(000000–)	Nut, Hex, Lock, M8 X 1.25, Nl, Ss	2
	25	32492	(000000–)	Washer, Flat, 0.38, Std	4
	26	32483	(000000–)	Washer, Flat, 0.25, Sae	2

Fig. 23 – Electrical Circuit Board Group

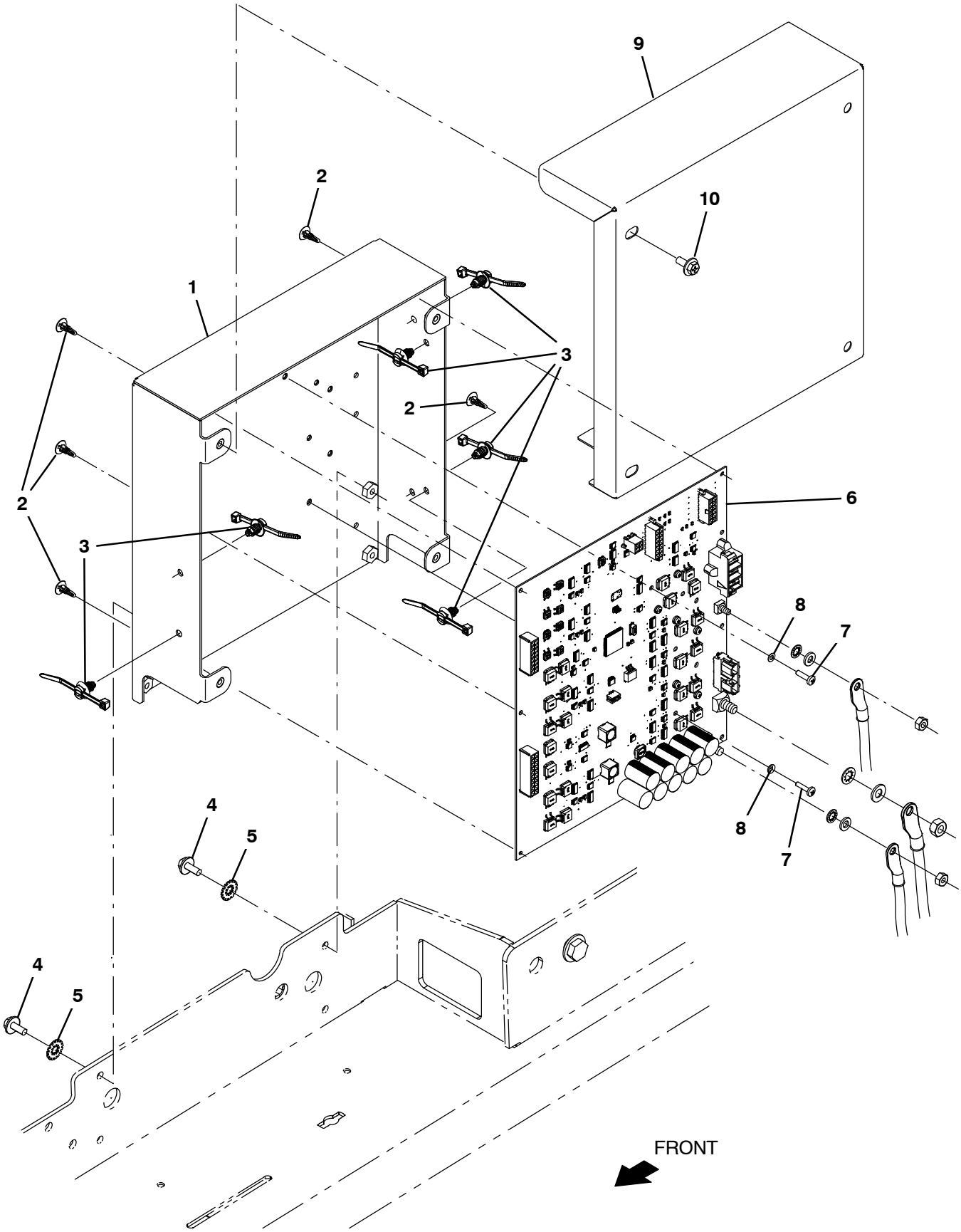

357034

Fig. 23 – Electrical Circuit Board Group

Ref.	Part No.	Serial Number	Description	Qty.
1	1239687	(000000–)	Housing Wldt, Cntrl	1
2	1210399	(000000–)	Stand–Off, Circuitboard [0.25”]	8
3	1210807	(000000–)	Wire, Tie [W/.25” Fir Tree Clip]	6
4	1034731	(000000–)	Screw, Hex, M6 X 1.00 X 16, Sems, Ss	4
5	41140	(000000–)	Washer, Lock, Int–Ext, 0.25	4
6	9045269*	(000000–)	Circuitboard Kit, Main Sweep, Ci [S16]	1
7	06927	(000000–)	Screw, Pan, Phl, M4 X 0.70 X 16, 4.8	6
8	1202860	(000000–)	Washer, Flat, 0.17b 0.31d .03, Nyl	6
9	1239452	(000000–)	Cover, Box, Controls	4
10	1034731	(000000–)	Screw, Hex, M6 X 1.00 X 16, Sems, Ss	4

***** Requires Tennant *True* service or an authorized Tennant service provider.

Fig. 24 – Electrical Box Group

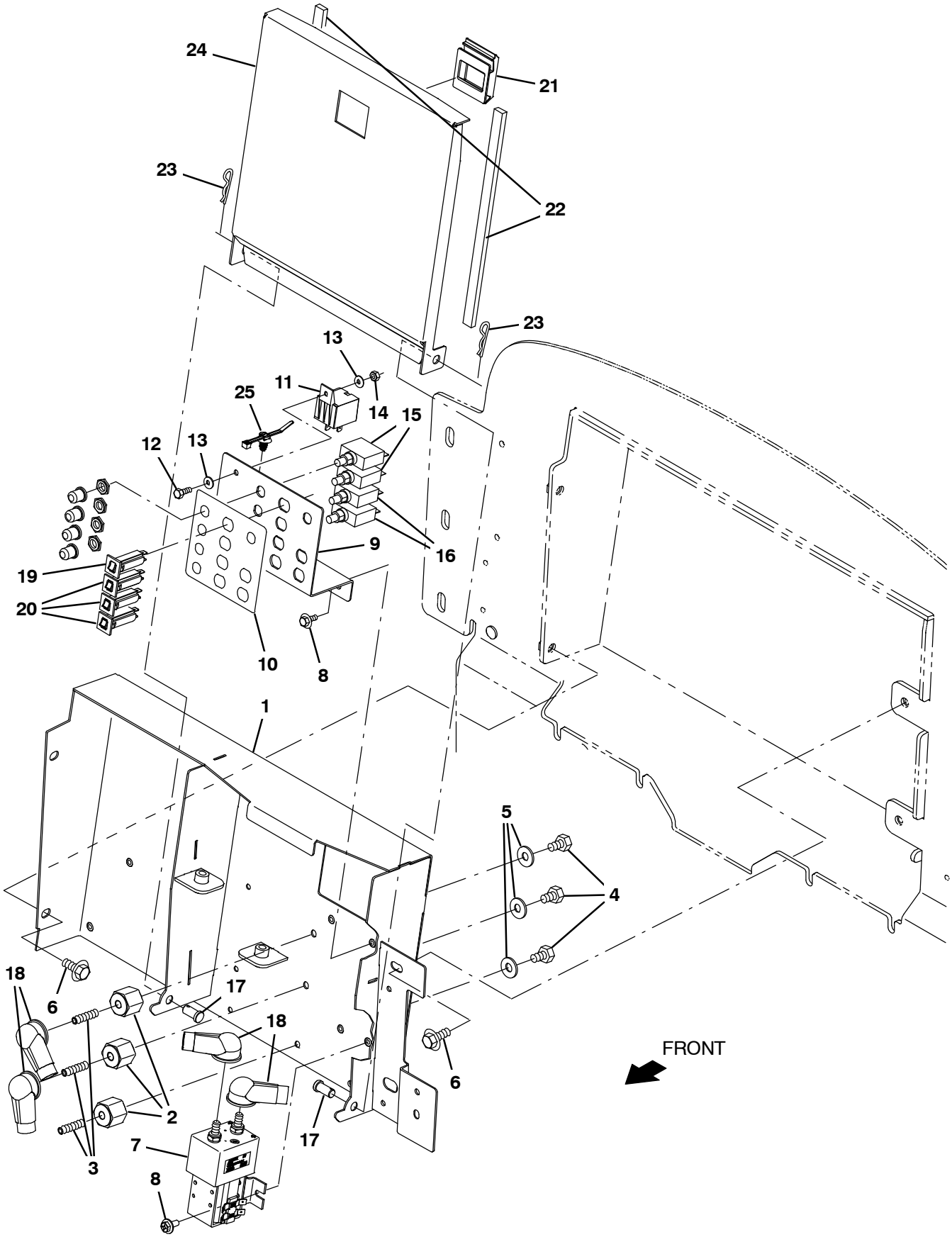

357035 – NA

Fig. 24 – Electrical Box Group

Ref.	Part No.	Serial Number	Description	Qty.
1	1251303	(000000–)	Bracket Wldt, Mount, Charger	1
2	1205345	(000000–)	Stand–Off, Wir, M8, Insulator, Panel	3
3	607461	(000000–)	Screw, Set, M8 X 1.25 X 35, Nl	3
4	386868	(000000–)	Screw, Hex, M8 X 1.25 X 12, Ss	3
5	01685	(000000–)	Washer, Flat, 0.38b 0.88d .08, Ss	3
6	1020341	(000000–)	Screw, Hex, M8 X 1.25 X 20, Ss, Sems	4
7	1068510	(000000–)	Contactor, 36vdc, 200a, Spst	1
8	1034731	(000000–)	Screw, Hex, M6 X 1.00 X 16, Sems, Ss	4
9	1251698	(000000–)	Bracket, Breaker, Rear	1
10	1242463	(000000–)	Label, Circuitbreaker, Rear	1
11	1229172	(000000–)	Relay, 36vdc, 025a, Spdt	1
12	24199	(000000–)	Screw, Hex, M5 X 0.80 X 16, Ss	1
13	01683	(000000–)	Washer, Flat, 10, Ss	2
14	09739	(000000–)	Nut, Hex, Lock, M5 X 0.80, Nl, Ss	1
15	383727	(000000–)	Circuitbreaker, 40.0a, Resetable	2
16	383725	(000000–)	Circuitbreaker, 30.0a, Resetable	2
17	39019	(000000–)	Pin, Clevis, 0.37d X 0.75l	2
18	1016314	(000000–)	Boot, Bulb, .50id 1.00id 2.50l, Red	4
19	1064188	(000000–)	Circuitbreaker, 15.0a, Resetable	1
20	1064184	(000000–)	Circuitbreaker, 02.5a, Resetable	3
21	81855	(000000–)	Latch, Push, 1.5 X 1.8 [A3–50]	1
22	1063908	(000000–)	Seal, Afmkt, Rbr, Clsd, Adh, 02ft	1
23	44906	(000000–)	Pin, Cotter, Hair, 0.38d .093 Wir	2
24	9045088	(000000–)	Cover Kit, Box, Elec, Afmkt [S16]	1
24	9045090	(000000–)	Cover Kit, Box, Elec, Afmkt [S16 Jp]	1
25	1210807	(000000–)	Wire, Tie [W/.25 Fir Tree Clip]	1

Fig. 25 – Electrical Box Wiring Group

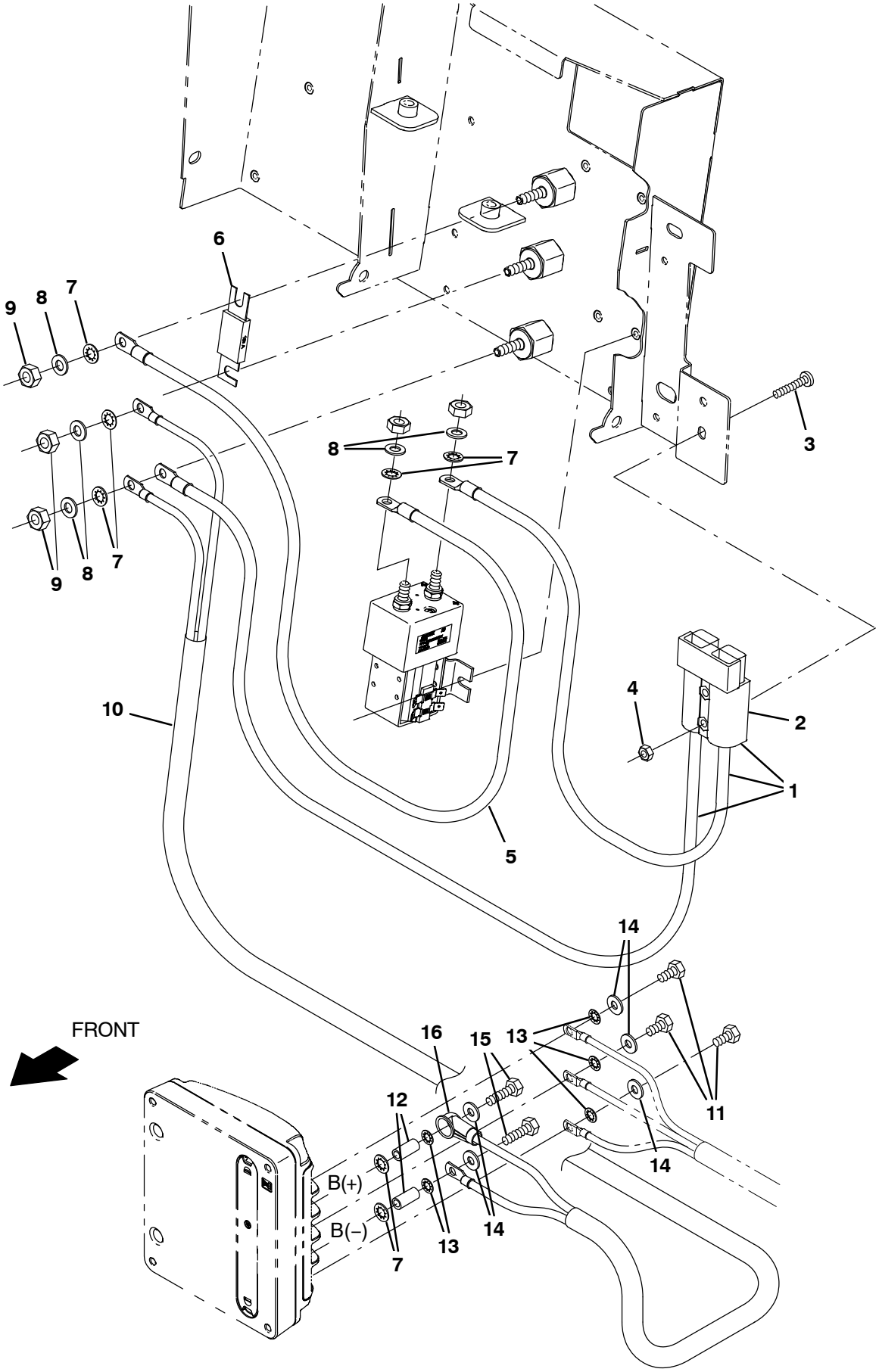

357036

Fig. 24 – Electrical Box Wiring Group

	Ref.	Part No.	Serial Number	Description	Qty.
▽	1	1076643	(000000–)	Cable, Battery, 4ga, .31ring / .312ring	1
▲	2	22892	(000000–)	Connector, Anderson, 175a, Gray	1
	3	33944	(000000–)	Screw, Pan, Phl, M6 X 1.00 X 35, 4.8	2
	4	08708	(000000–)	Nut, Hex, Lock, M6 X 1.00, Nl	2
	5	1076486	(000000–)	Cable, 04ga 5.5l Brown .31ring/.31ring	1
	6	87318	(000000–)	Fuse, 080a, 0.88 2.4l, 125volt,Slow–Blow	1
	7	32984	(000000–)	Washer, Lock, Int, 0.31	5
	8	39349	(000000–)	Washer, Flat, 0.31, Sae	5
	9	07786	(000000–)	Nut, Hex, Std, M8 X 1.25, Ss	3
	10	1076488	(000000–)	Cable Assy, 06ga [2 Wire, M6/M8 Ring]	1
	11	87308	(000000–)	Screw, Hex, M6 X 1.00 X 12, 8.8	3
	12	1206722	(000000–)	Sleeve, P/M, 0.25b 0.38d 0.8l	2
	13	32982	(000000–)	Washer, Lock, Int, 0.25	5
	14	32483	(000000–)	Washer, Flat, 0.25, Sae	5
	15	06946	(000000–)	Screw, Hex, M6 X 1.00 X 35, 8.8	2
	16	1016314	(000000–)	Boot, Bulb, .50id 1.00id 2.50l, Red	1

Fig. 26 – Battery Tray and Cable Group, Wet, 36V, 360Ah

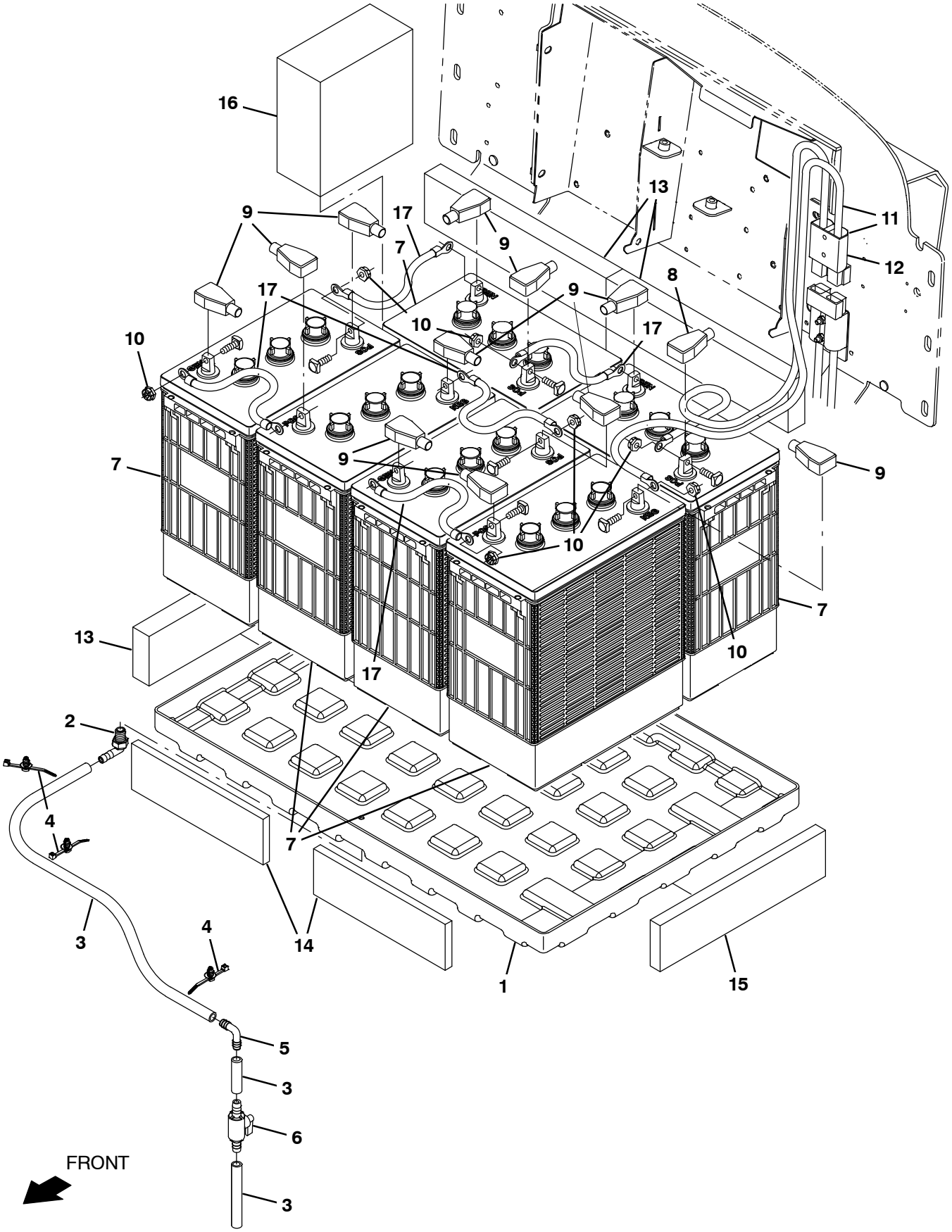

357041

Fig. 26 – Battery Tray and Cable Group, Wet, 36V, 360Ah

	Ref.	Part No.	Serial Number	Description	Qty.
	1	369409	(000000–)	Tray, Battery	1
	2	1248841	(000000–)	Fitting, Plstc, E90, Bm06/Pm04	1
	3	1006416	(000000–)	Hose, Afmkt, Pvc, Clr, 0.38id, 03ft	1
	4	1210807	(000000–)	Wire, Tie [W/.25” Fir Tree Clip]	4
	5	20951	(000000–)	Fitting, Plstc, E90, Bm06/Bm06	1
	6	1233940	(000000–)	Valve, Ball, Bm06/Bm06, Pvc, W/Handle	1
	7	1070587	(000000–)	Battery, Wet, 06vdc 0360ah, W/ Cart [Tr]	6
	8	68873	(000000–)	Boot, Terminal, Battery, 02–01ga, Red	1
	9	68872	(000000–)	Boot, Terminal, Battery, 02–01ga, Blk	11
	10	87435	(000000–)	Nut, Hex, Flexlock, .31–18	12
▽	11	223361	(000000–)	Cable Assy, 04ga .34ring /.34ring, 175a	1
▲	12	22892	(000000–)	Connector, Anderson, 175a, Gray	1
	13	630375	(000000–)	Spacer, Battery, Foam, 1.25 X 3.3 X 13.7	3
	14	1243754	(000000–)	Spacer, Battery, 0.50 X 3.0 X 10.0	2
	15	1242643	(000000–)	Spacer, Battery, 0.75 X 3.0 X 12.5	1
	16	1252818	(000000–)	Spacer, Battery, Foam, 3.25 X 7.5 X 7	1
	17	223356	(000000–)	Cable, 04ga 12.0l Blk .31ring /.31ring	5

Fig. 27 – Wire Harnesses Group

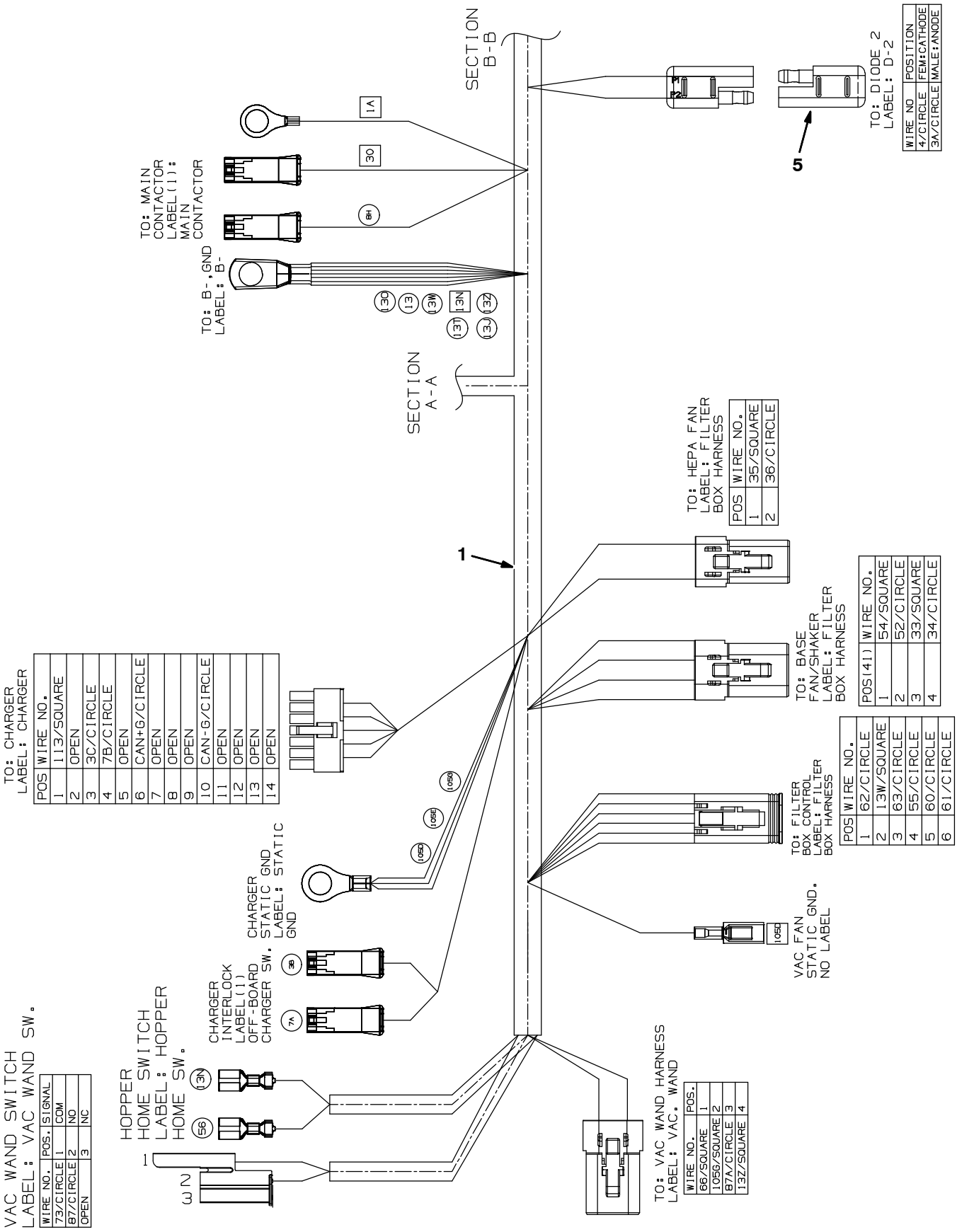

Fig. 27 – Wire Harnesses Group

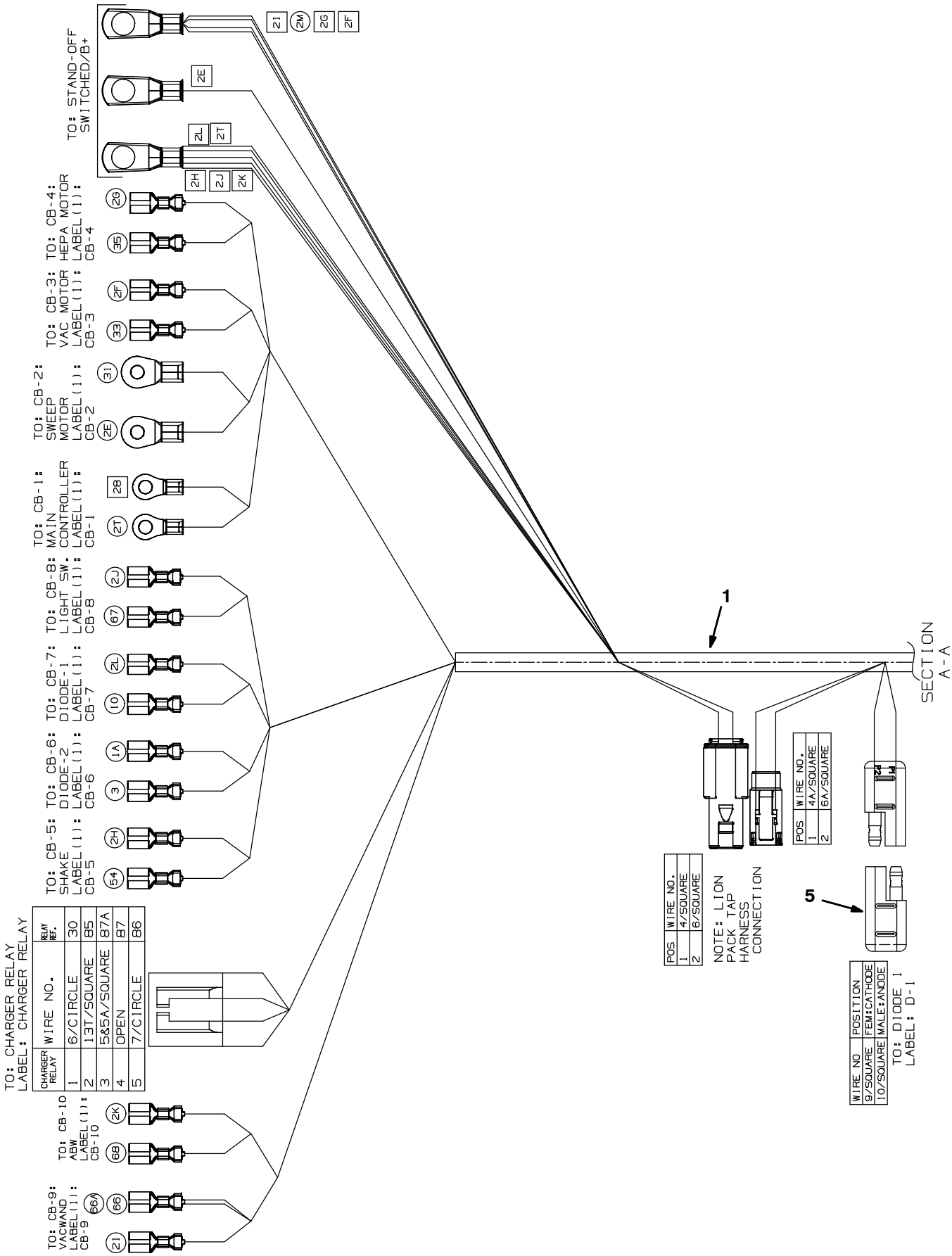

Fig. 27 – Wire Harnesses Group

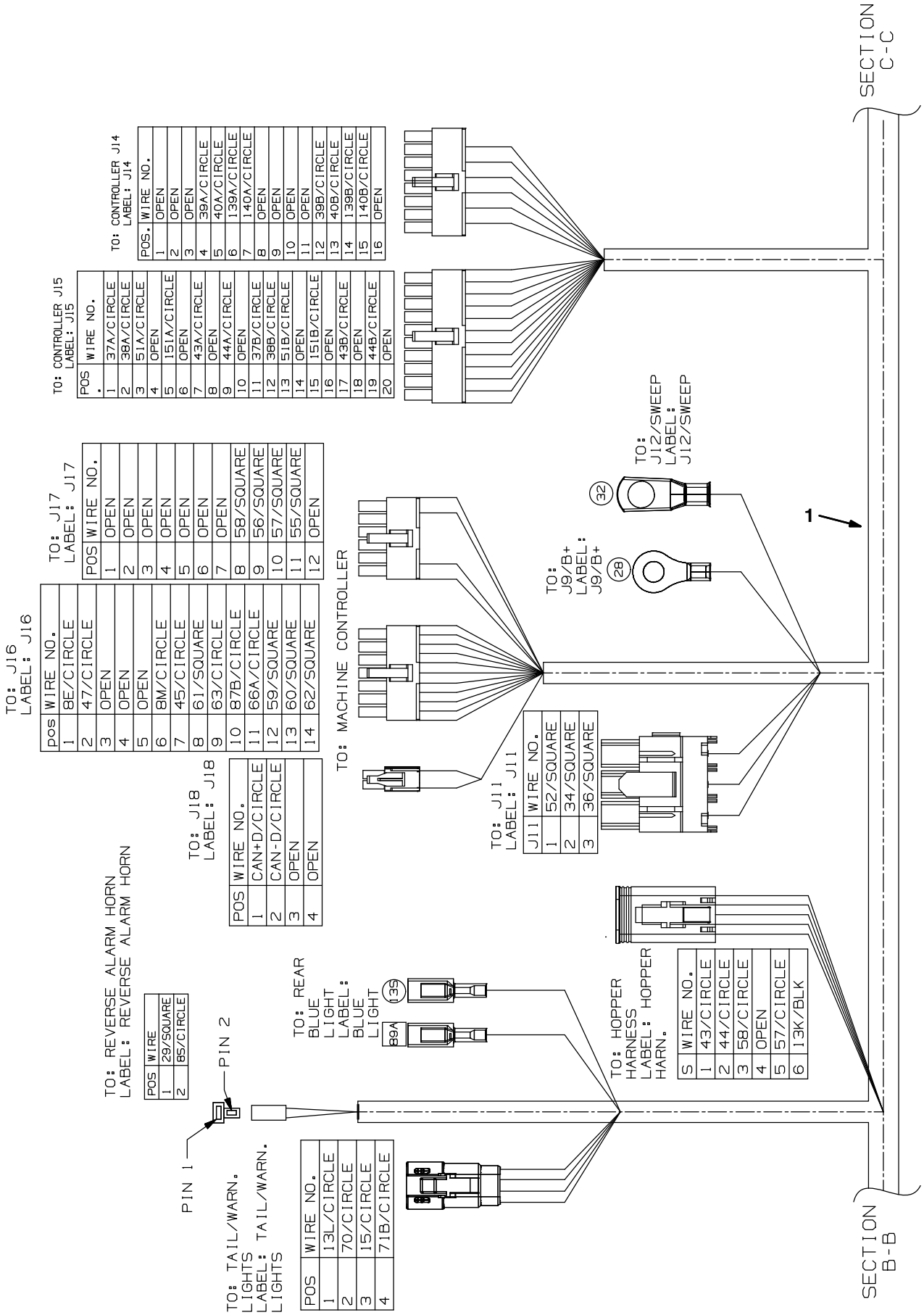

Fig. 27 – Wire Harnesses Group

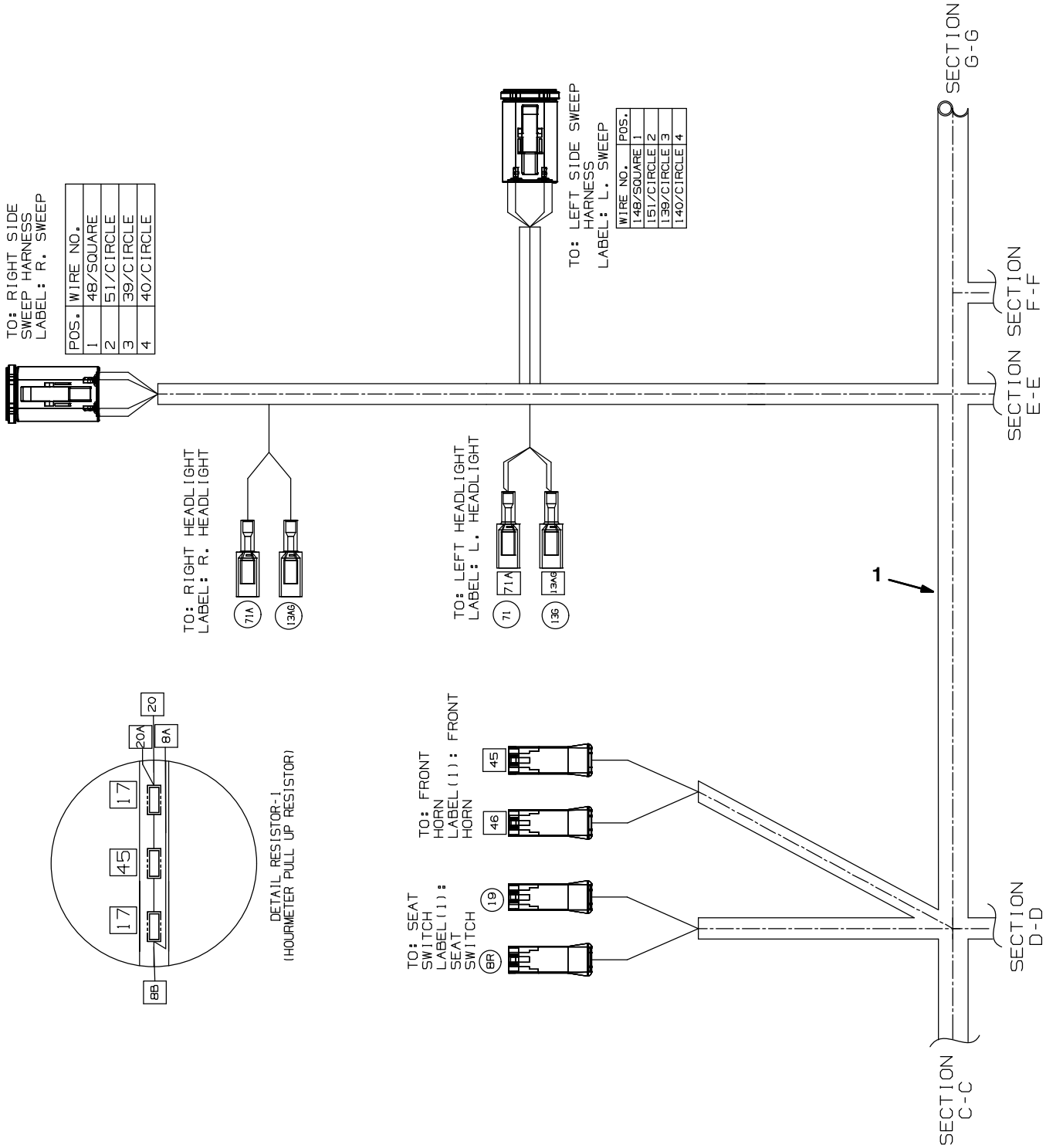

Fig. 27 – Wire Harnesses Group

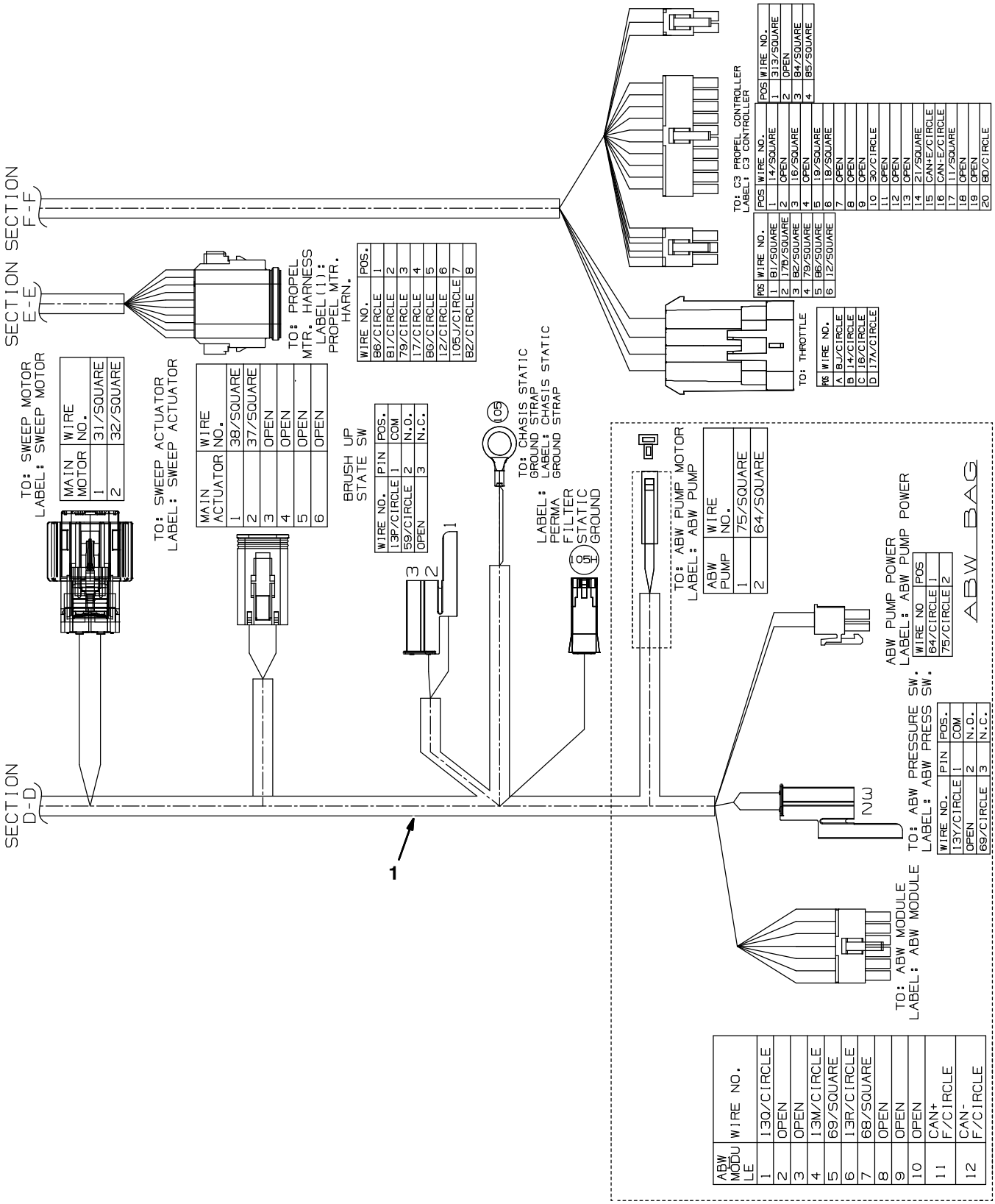

Fig. 27 – Wire Harnesses Group

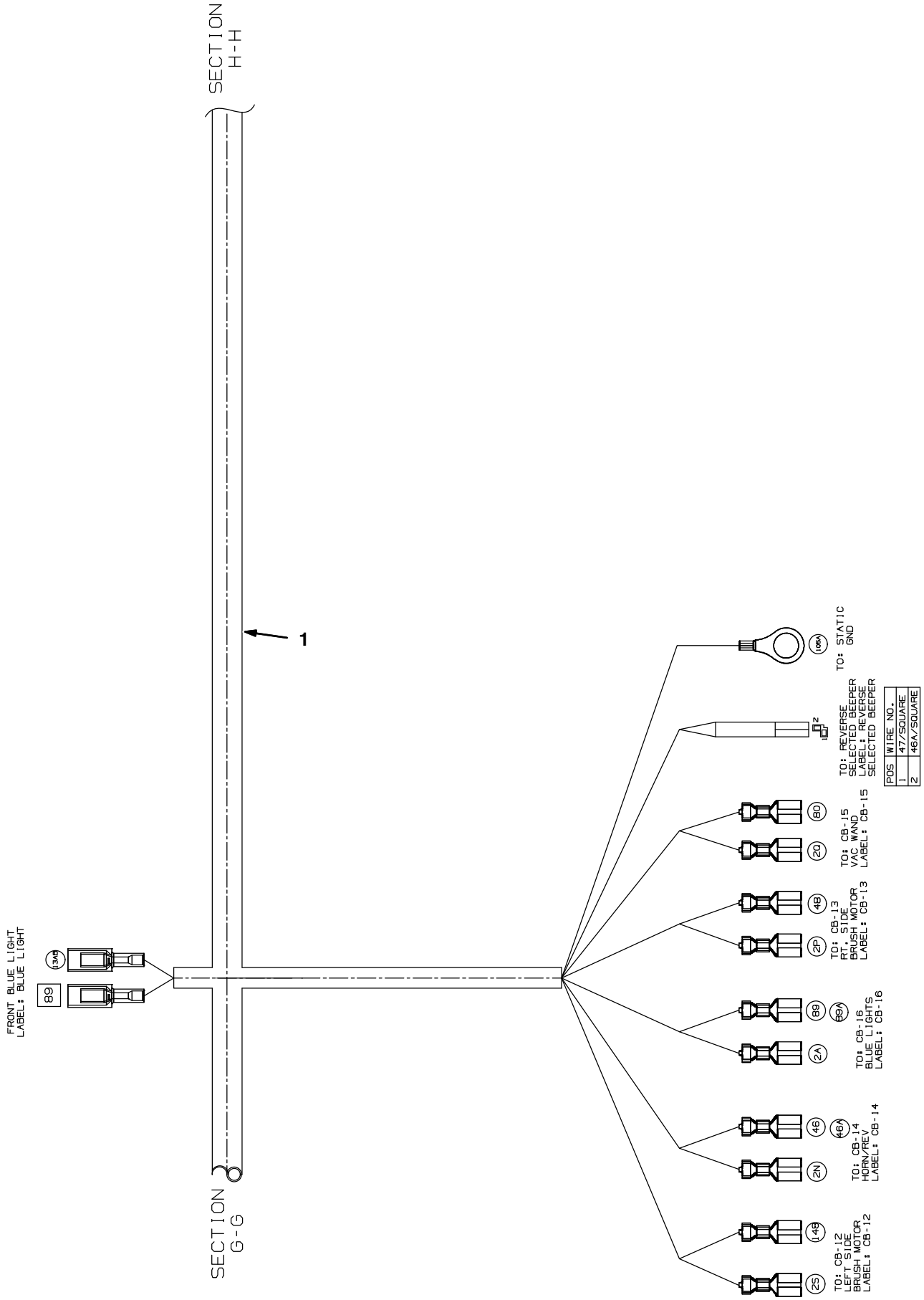

POS	WIRE NO.
1	47/SQUARE
2	46A/SQUARE

Fig. 27 – Wire Harnesses Group

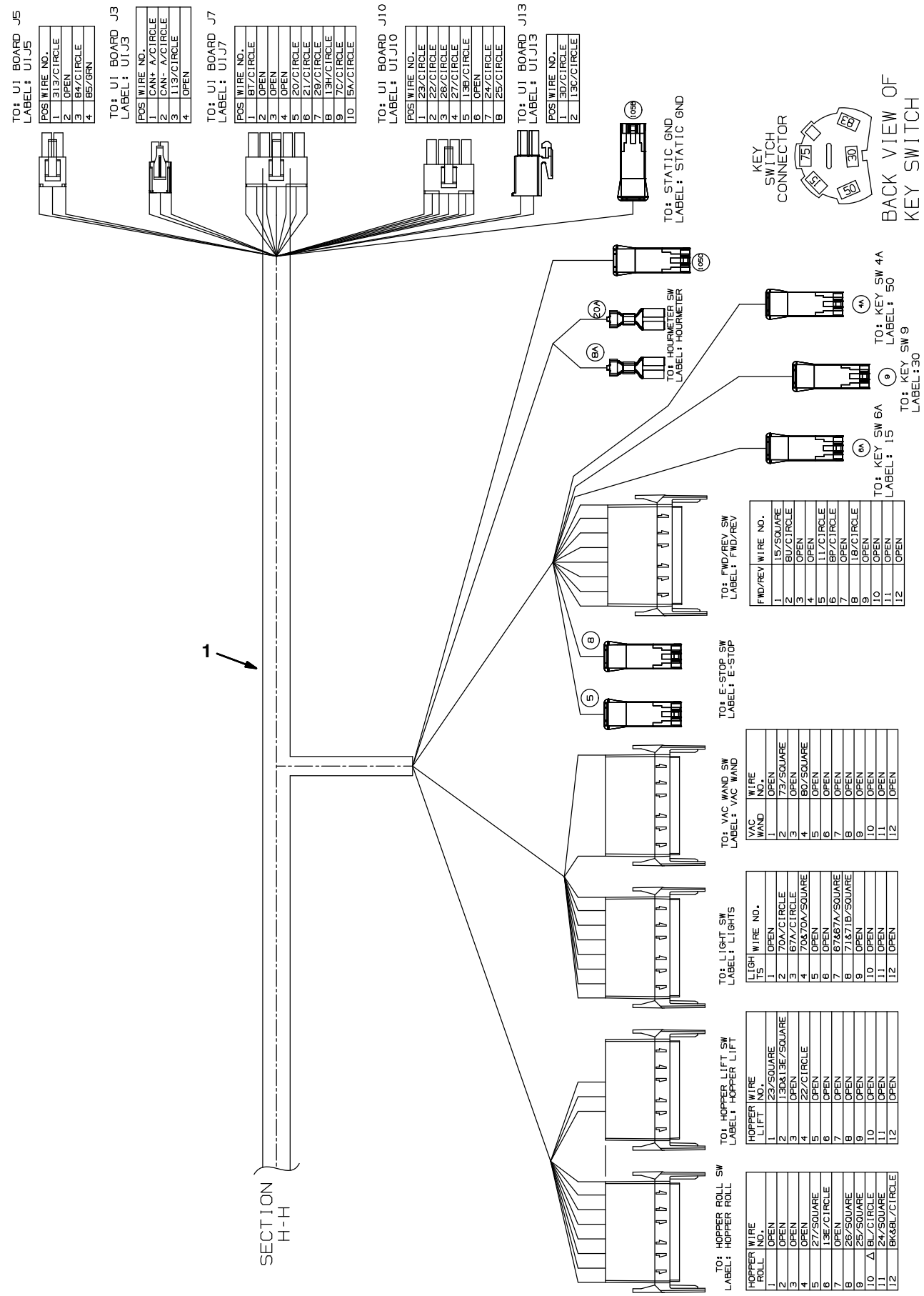

Fig. 27 – Wire Harnesses Group

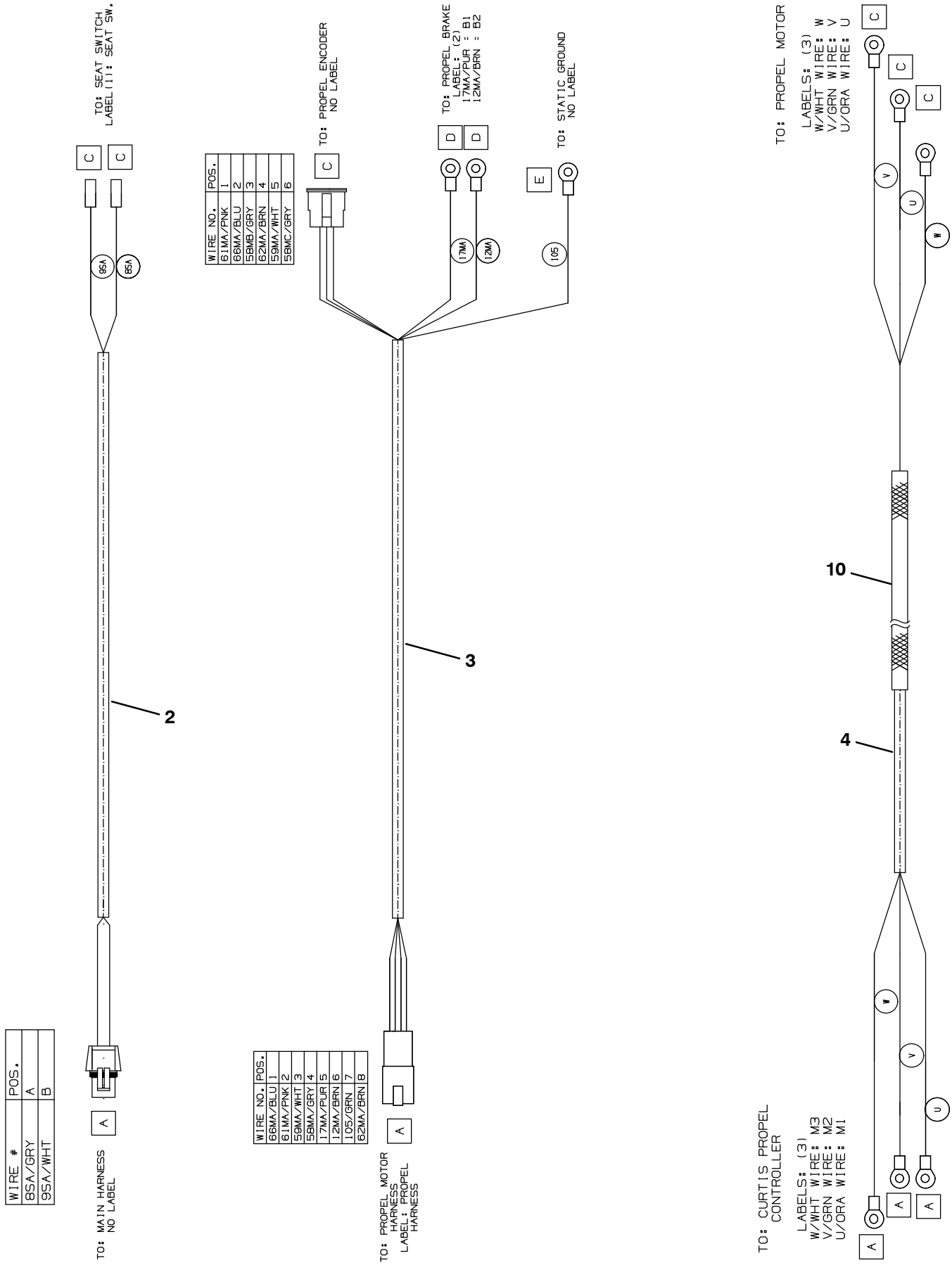

Fig. 27 – Wire Harnesses Group

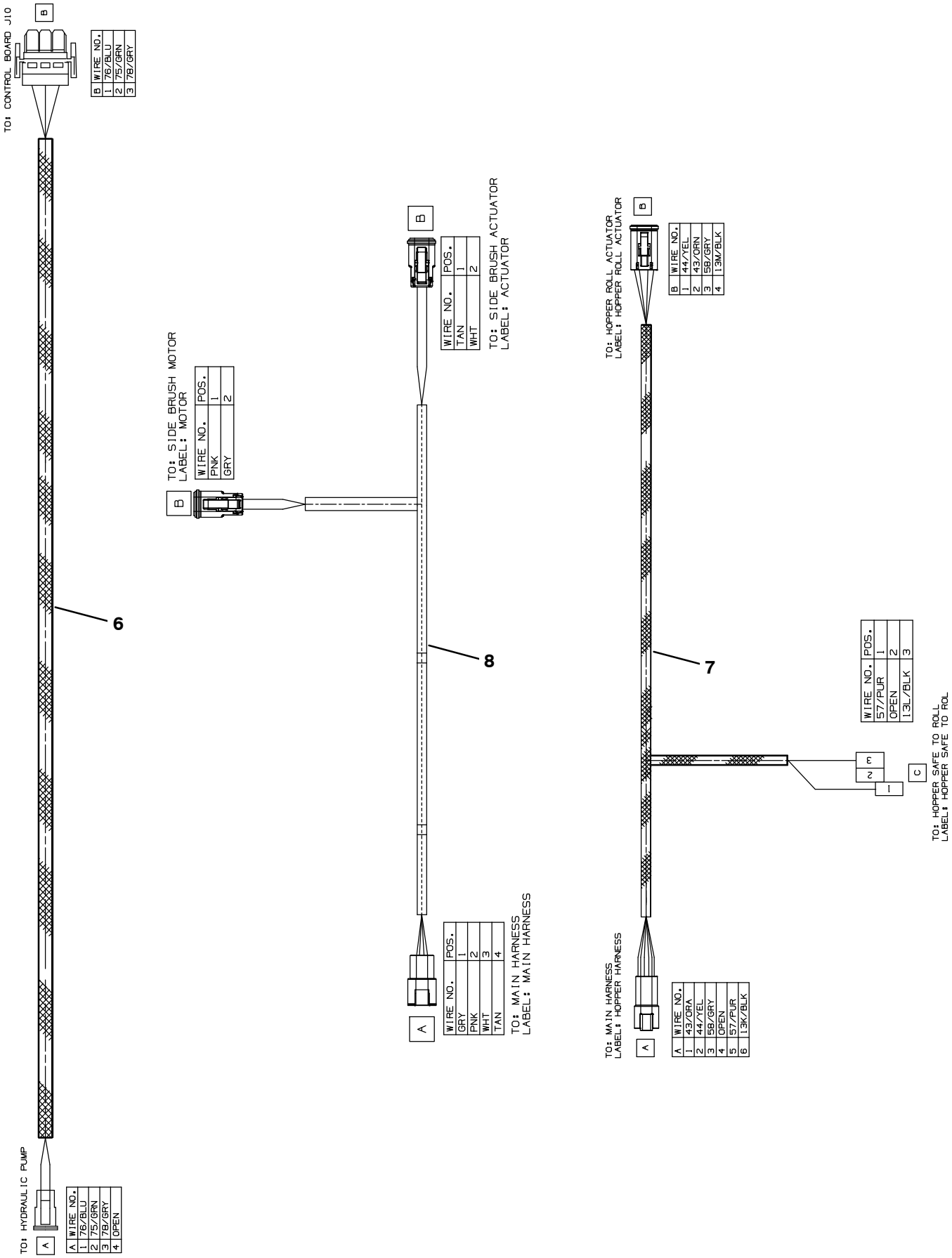

Fig. 27 – Wire Harnesses Group

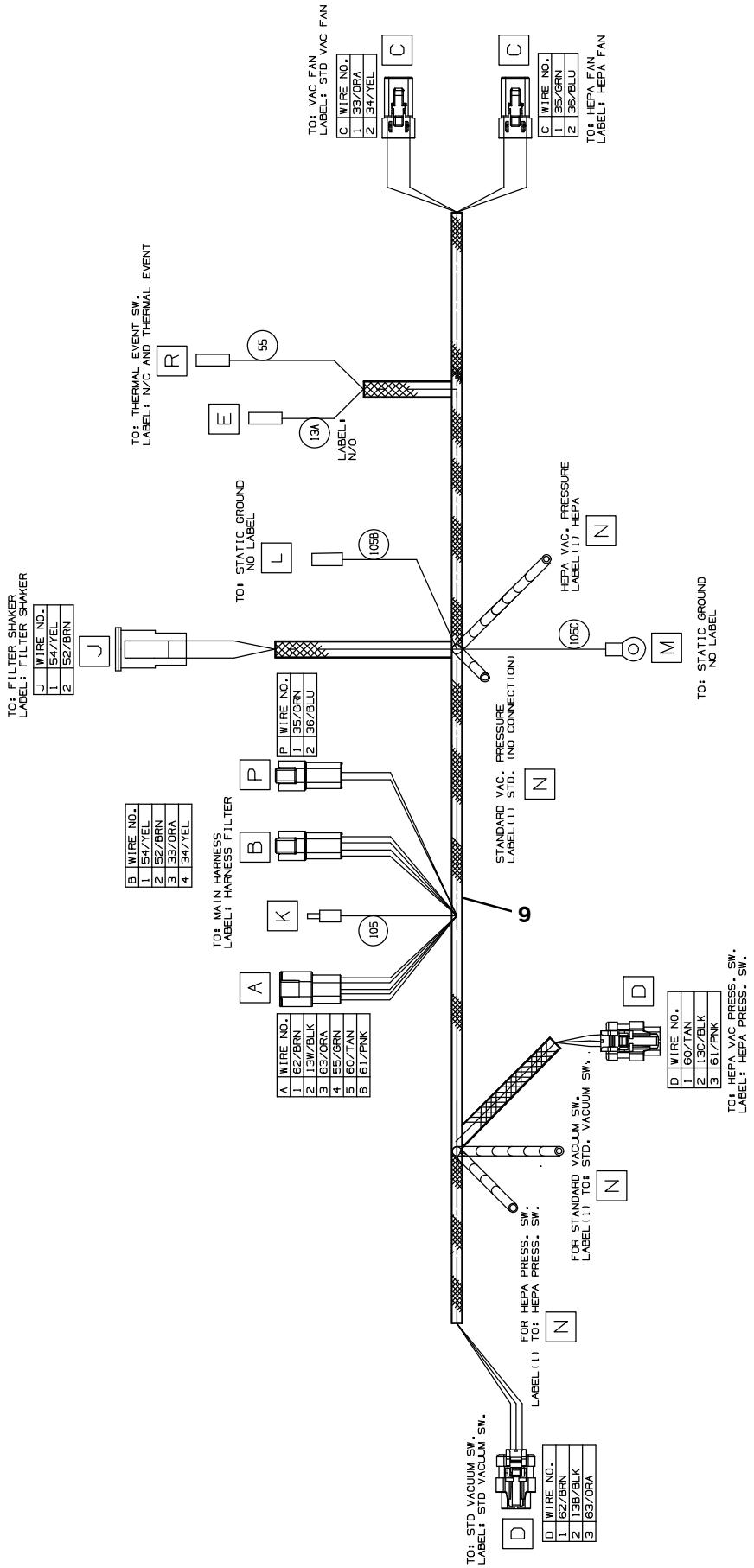

357061 – 357097

Fig. 27 – Wire Harnesses Group

Ref.	Part No.	Serial Number	Description	Qty.
1	1076416	(000000–)	Harness, Ele, Main [S16]	1
2	1069745	(000000–)	Harness, Ele, Seat [T12]	1
3	1077054	(000000–)	Harness, Wire, Propel Motor [S16]	1
4	1074787	(000000–)	Harness, Cable, Propel Motor [T12,Cw]	1
5	222290	(000000–)	Diode, Ele, Plug	2
6	1076417	(000000–)	Harness, Ele [Hyd. Pump, S16]	1
7	1076418	(000000–)	Harness, Ele, Hopper [Hi–Dump, S16]	1
8	1076419	(000000–)	Harness, Ele, Sweep, Side [S16]	1
9	1076420	(000000–)	Harness, Ele, Vac [S16]	1
10	82833	(000000–)	Sleeve, Nyl, 1.22id 35.0l	1

Fig. 28 – Electrical Schematic

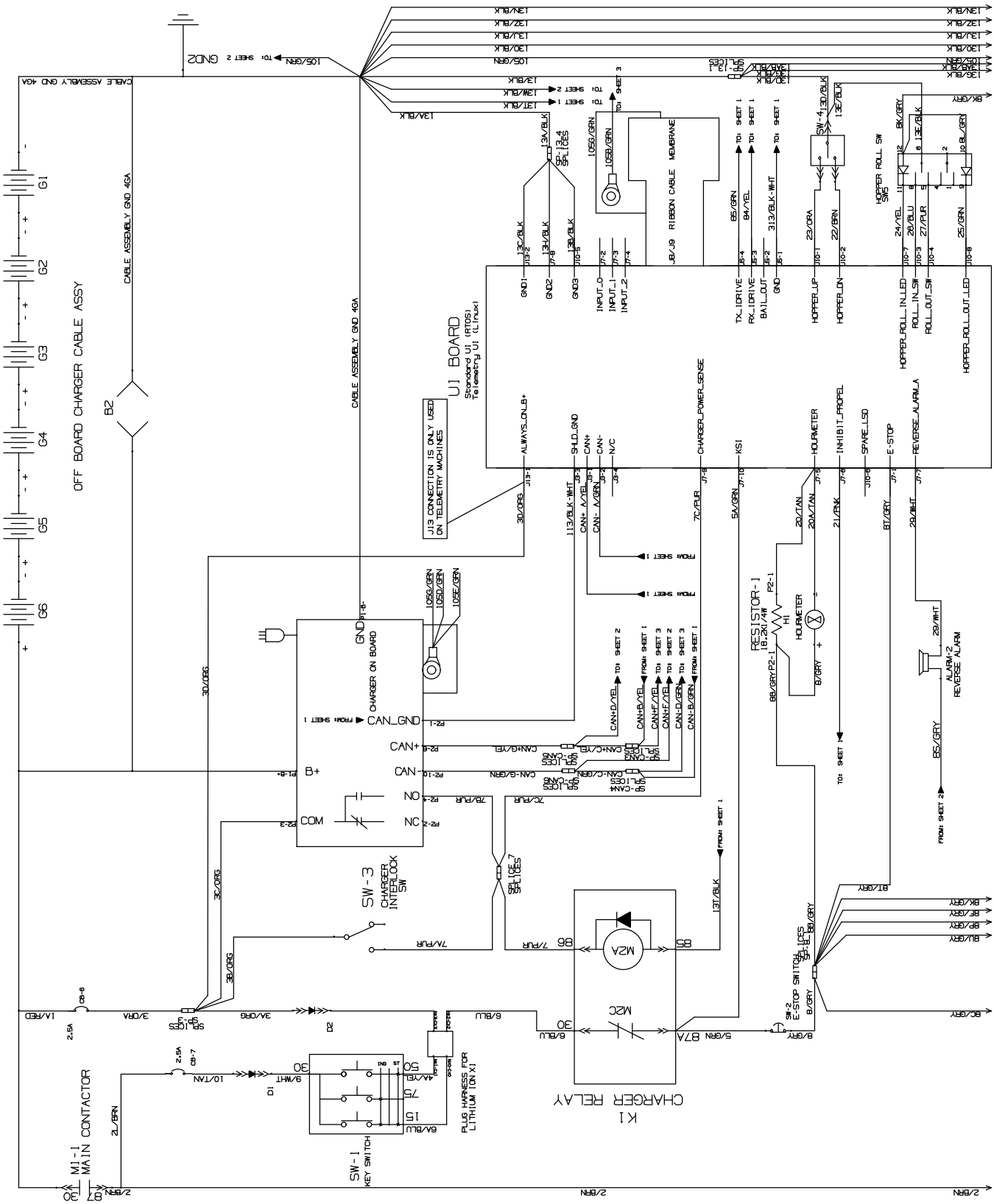

Fig. 28 – Electrical Schematic

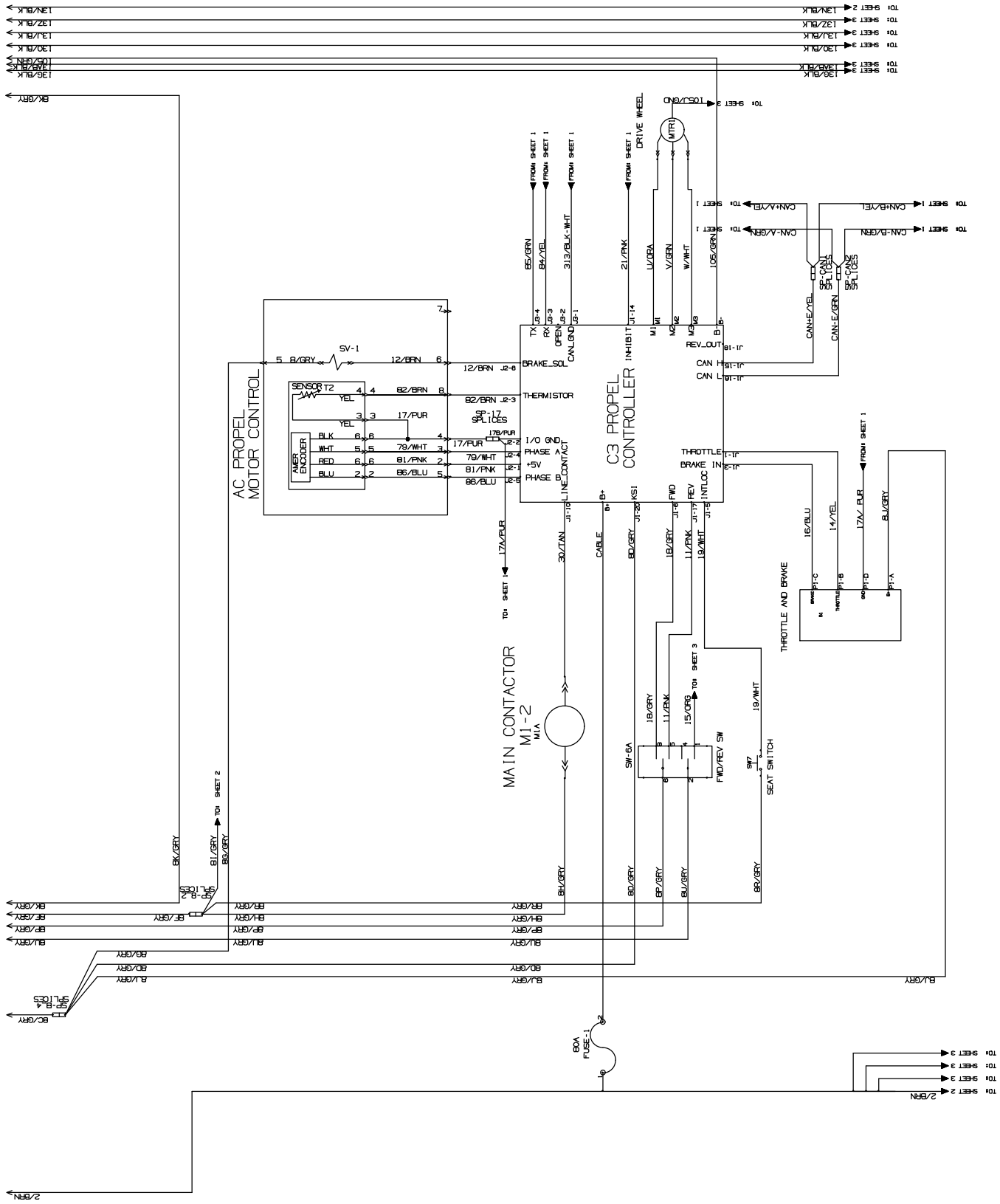

357029 – 1076952

Fig. 28 – Electrical Schematic

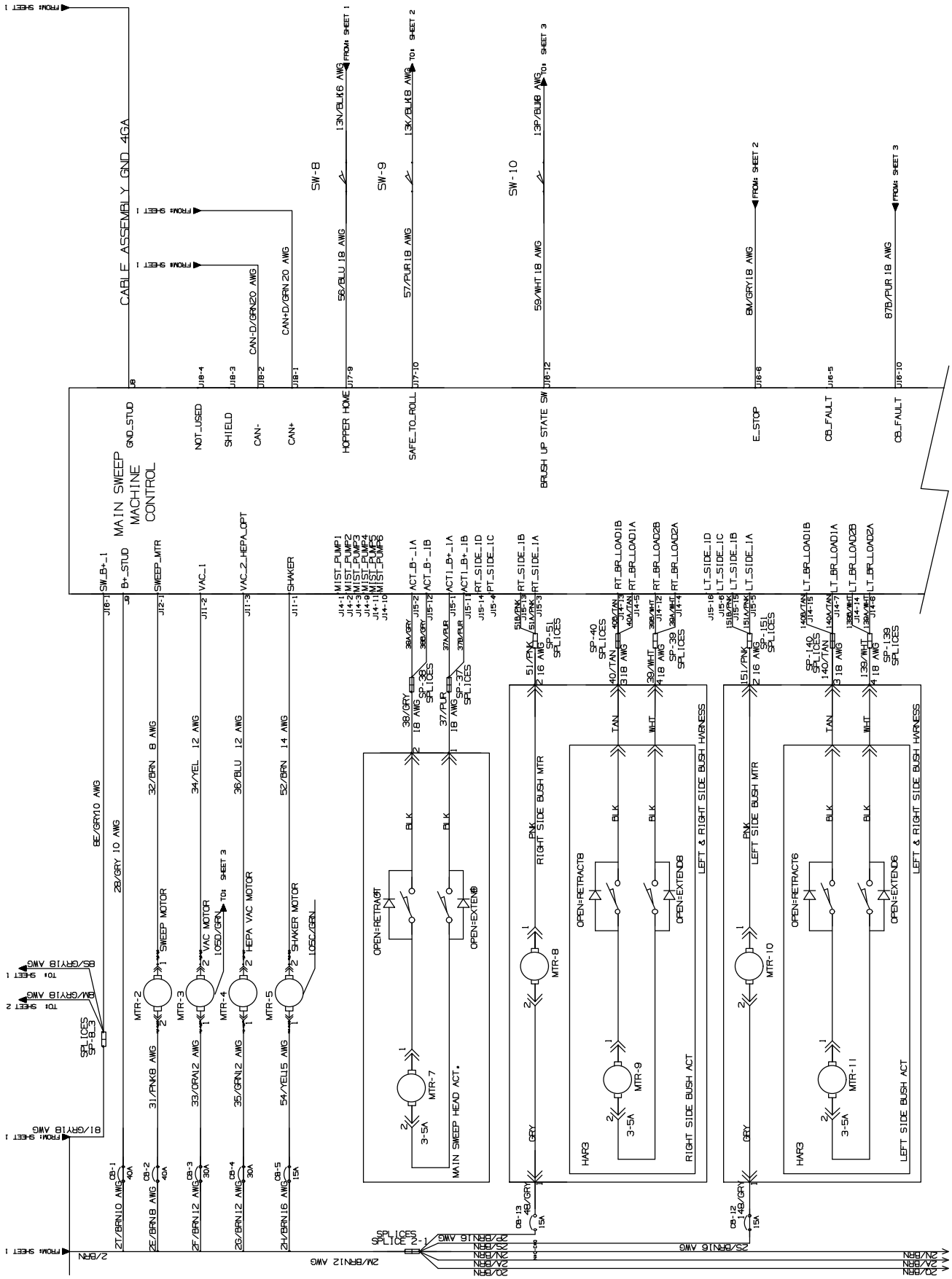

357029 – 1076952

Fig. 28 – Electrical Schematic

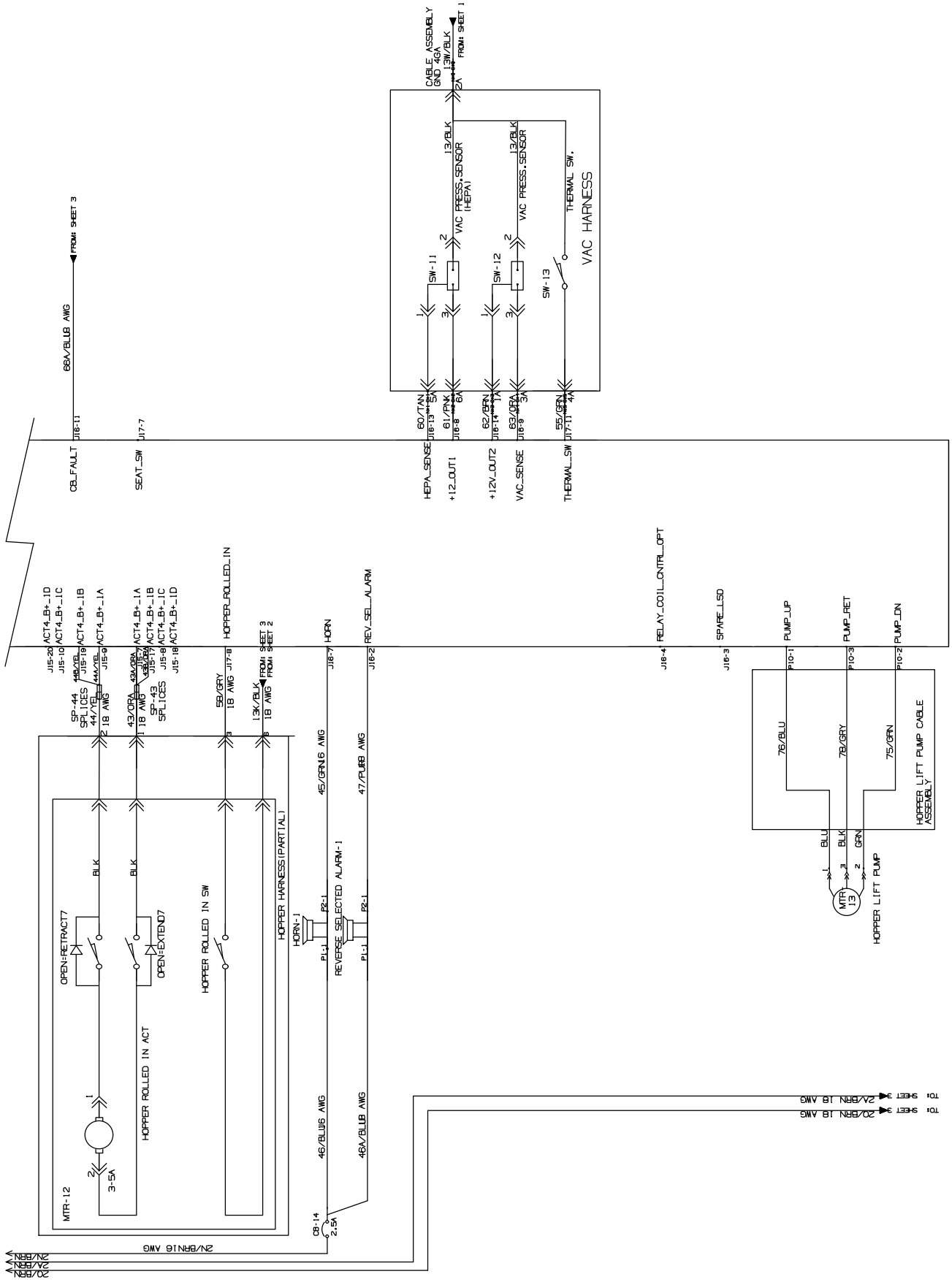

357029 – 1076952

Fig. 28 – Electrical Schematic

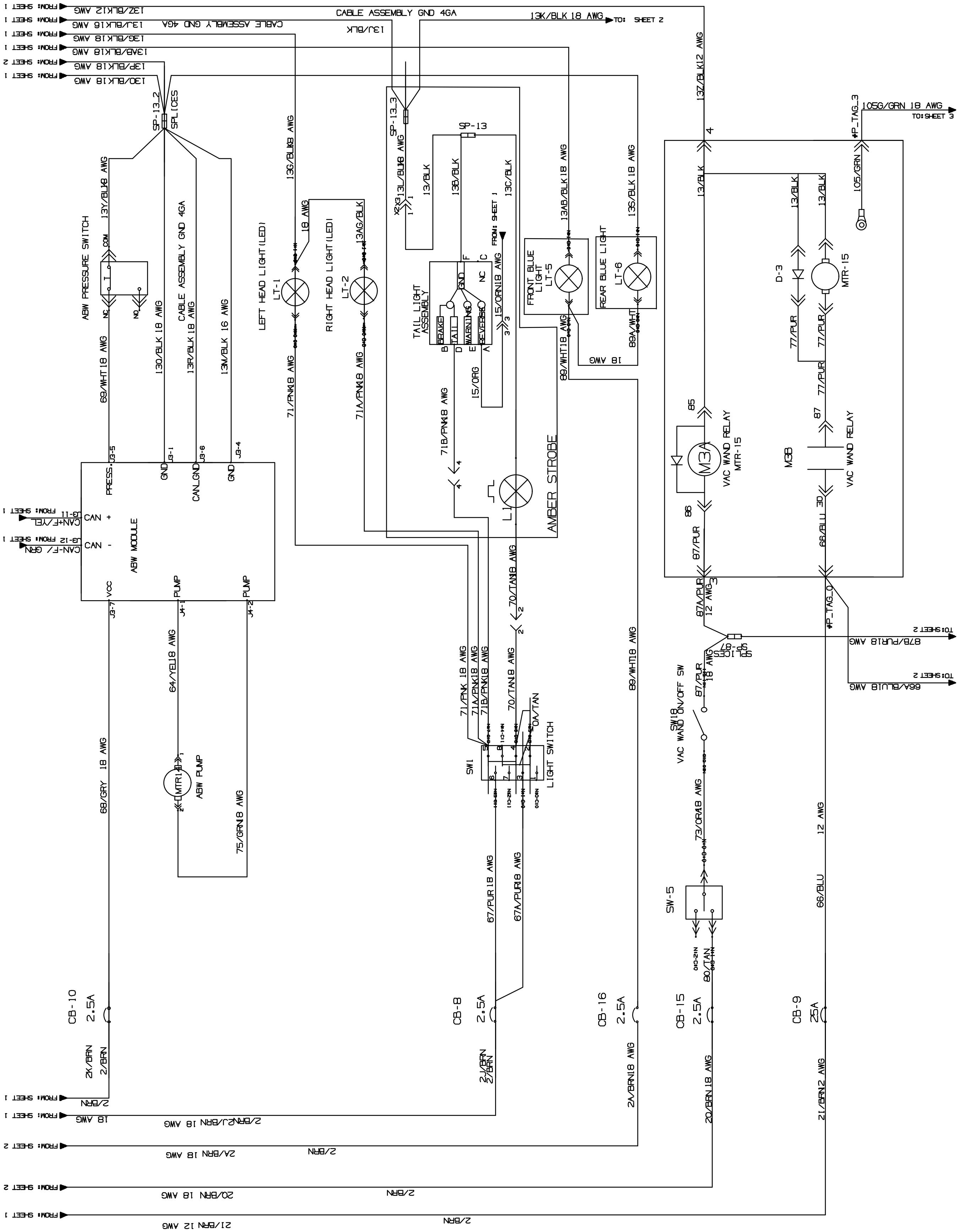

357029 – 1076952

Fig. 28 – Electrical Schematic

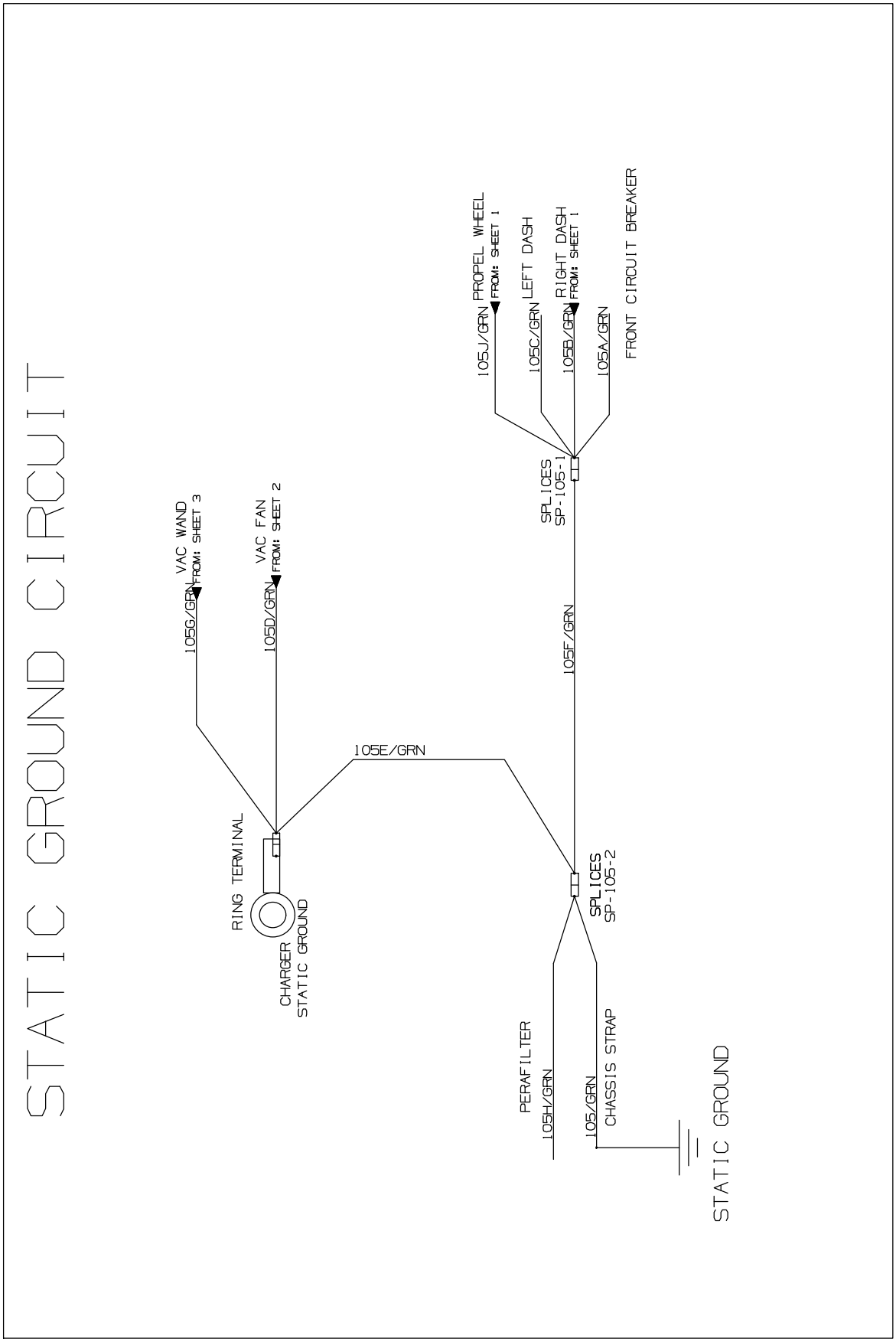

357029 – 1076952

Fig. 28 – Electrical Schematic

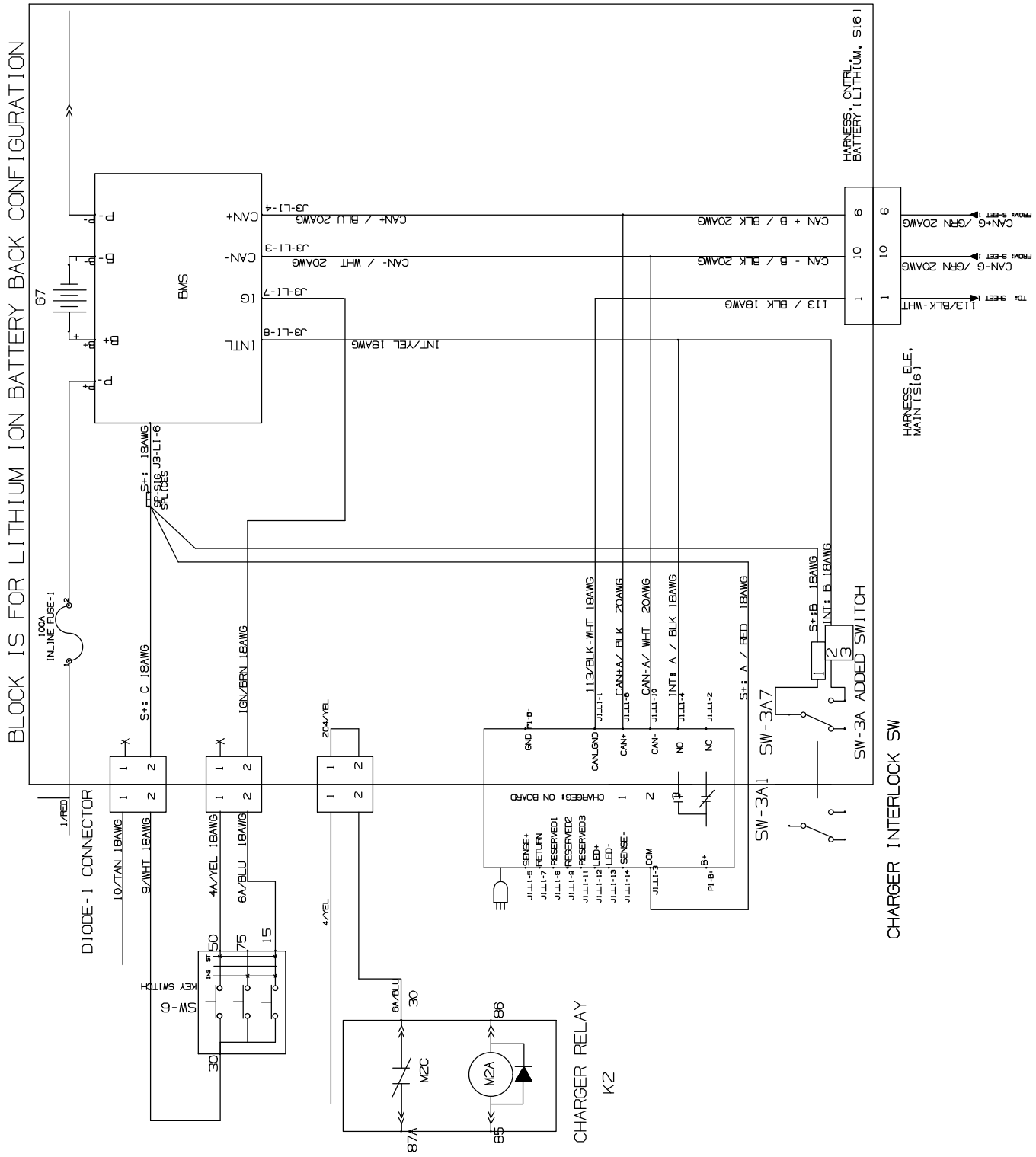

357029 – 1076952

Fig. 29 – Label Group

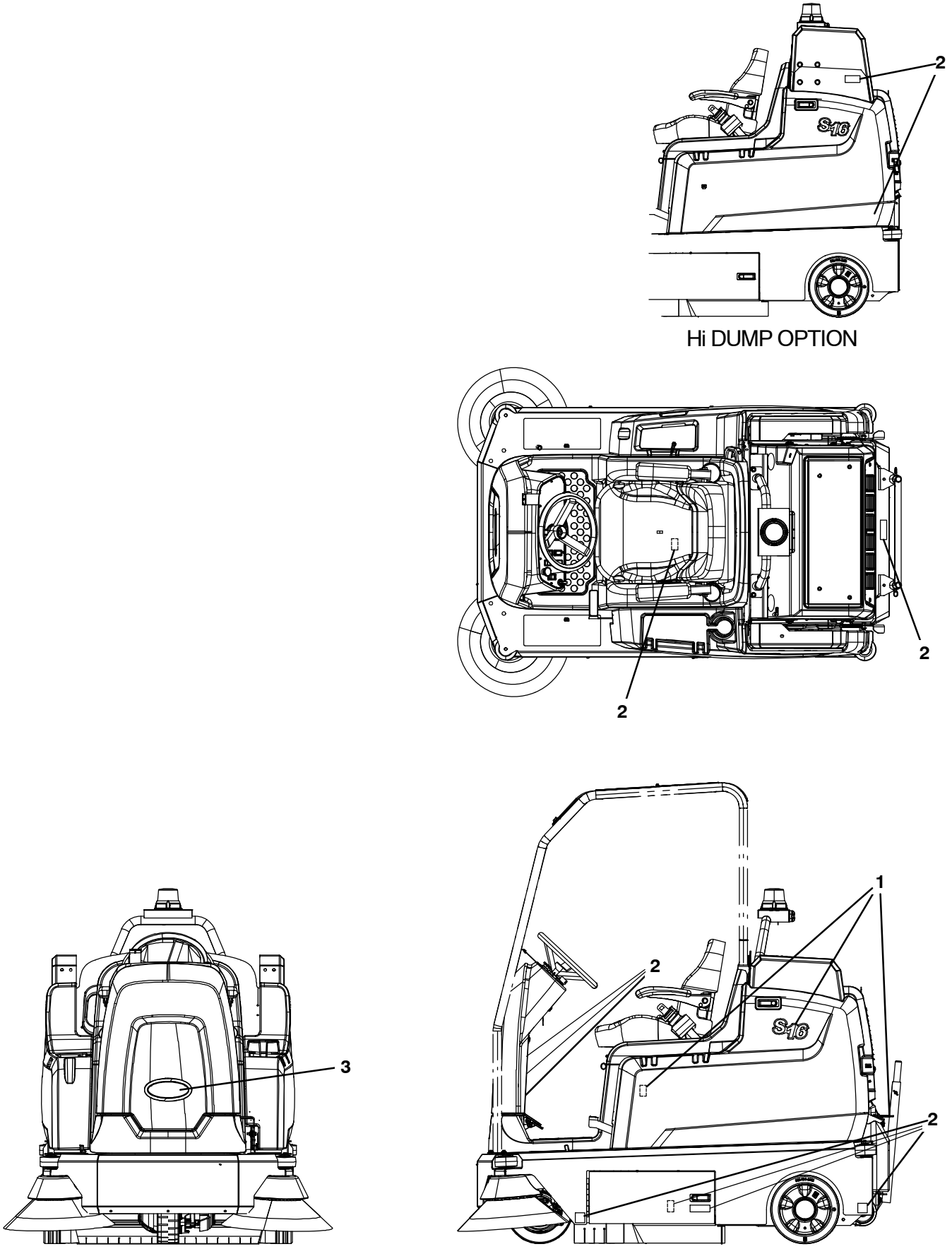

357059 – NA

Fig. 29 – Label Group

Ref.	Part No.	Serial Number	Description	Qty.
1	1252768	(000000–)	Label Set, NA, Pyc [S16]	1
1	1252772	(000000–)	Label Set, Jpn, Pyc [S16]	1
2	1252769	(000000–)	Label Set, NA, Vyl [S16]	1
2	1252773	(000000–)	Label Set, Jpn, Vyl [S16]	1
3	1204077	(000000–)	Nameplate, Tennant, Domed	1

SECTION 3

Contents **Page**

Fig. 1 - Side Brush Group, Left Hand 3-2
Fig. 2 - Vacuum Wand Group 3-4
Fig. 3 - Vacuum Wand Box and Fan Group 3-6
Fig. 4 - Fire Extinguisher Kit 3-9
Fig. 5 - Overhead Guard Kit 3-10
Fig. 6 - Single Side Brush Dust Control Group . 3-12
Fig. 7 - Brush Door Dust Control Skirts Group . 3-14
Fig. 8 - Dual Side Brush Dust Control Group . . 3-16
Fig. 9 - Hepa Vacuum Fan Group 3-18
Fig. 10 - Spot Light Group, Blue 3-21
Fig. 11 - Strobe Light and Backup Alarm Group 3-22
Fig. 12 - Headlight and Tail Light Group 3-24
Fig. 13 - Battery Group, Wet, 36V 240Ah 3-26
Fig. 14 - Battery Group, Lithium- Ion, 36V, 12.2 Kwh 3-28
Fig. 15 - Battery Group, Lithium- Ion, 36V, 8.2 Kwh 3-30
Fig. 16 - Battery Group, Lithium- Ion, 36V, 4.1 Kwh 3-32
Fig. 17 - On- Board Battery Charger Group 3-34
Fig. 18 - Off- Board Battery Chargers Group . . . 3-36
Fig. 19 - Off- Board Lithium- Ion Battery Charger Group 3-38
Fig. 20 - Smart- Fill Automatic Battery Watering Group 3-40
Fig. 21 - Manual Battery Watering System 3-42
Fig. 22 - Carpet Care Group 3-43
Fig. 23 - Low Dump Hopper Bins Kit 3-44
Fig. 24 - Telemetry Group 3-46
Fig. 25 - Telemetry Wire Harness Group 3-48
Fig. 26 - Documentation Group (Online Only) . . 3-49

Fig. 1 - Side Brush Group, Left Hand

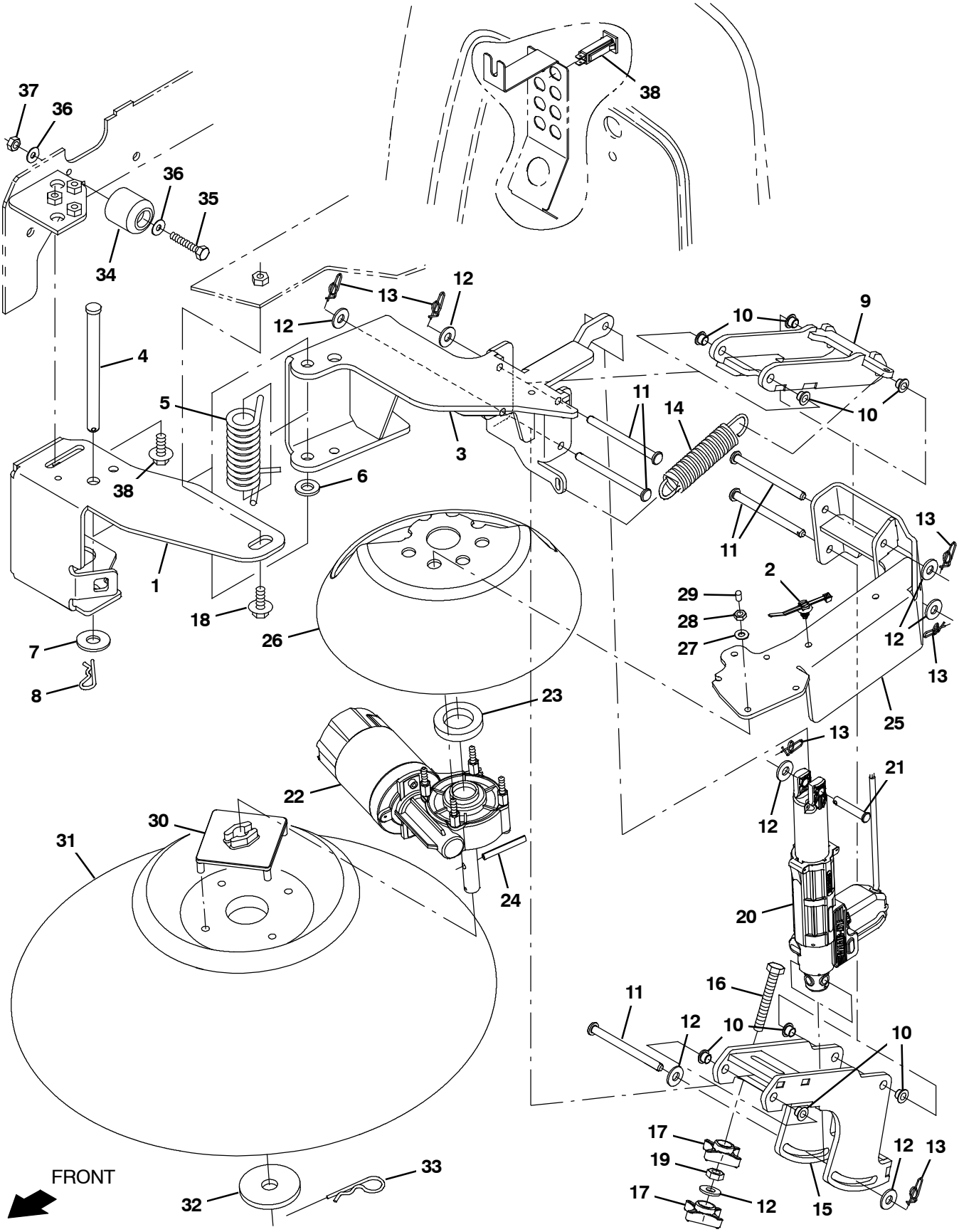

357019

Fig. 1 - Side Brush Group, Left Hand

Ref.	Part No.	Serial Number	Description	Qty.
1	1252359	(000000-)	Bracket, Channel, Brush, Lh	1
2	1210807	(000000-)	Wire, Tie [W/.25” Fir Tree Clip]	7
3	1252109	(000000-)	Bracket Wldt, Brush, Pivot, Lh	1
4	51225- 1	(000000-)	Pin, Clevis, 0.50d X 6.00l	1
5	1251331	(000000-)	Spring, Tors, 0.87id .25wir 13.0coil, Rh	1
6	140127	(000000-)	Washer, Thrust, 0.51b 1.00d 0.12w, Brz	1
7	41619	(000000-)	Washer, Flat, 0.56b 1.38d .11, Ss	1
8	44906	(000000-)	Pin, Cotter, Hair, 0.38d .093 Wir	1
9	1256531	(000000-)	Arm Wldt, Upper, Link, Lh	1
10	1251107	(000000-)	Bushing, Flng, 8mmb 10mmd 7.5mml	8
11	1252353	(000000-)	Pin, Clevis, 8mmd X 100mml [304ss]	5
12	01685	(000000-)	Washer, Flat, 0.38b 0.88d .08, Ss	8
13	1216647	(000000-)	Pin, Cotter, Hair, 0.38d .054 Wir	6
14	1252317	(000000-)	Spring, Extn, 1.05od 0.13wir 5.00l	1
15	1252134	(000000-)	Lift Wldt, Lower, Link, Lh	1
16	1014163	(000000-)	Screw, Hex, M8 X 1.25 X 60, Fl, Ss	1
17	1213677	(000000-)	Knob, Star, 2.00od 4ear M8x1.25 [Yel]	2
18	1072628	(000000-)	Screw, Hex, M8 X 1.25 X 25, Ss, Sems	3
19	200101017	(000000-)	Nut, Hex, Jam, M8 X 1.25	1
20	1237208	(000000-)	Actuator, 36vdc, 60mm Stroke	1
21	81581	(000000-)	Pin, Clevis, 0.31d X 1.75l	1
22	1246330	(000000-)	Motor, Ele, 36vdc 0070rpm 0.16hp Gear	1
23	1250678	(000000-)	Spacer, Brush	1
24	11398	(000000-)	Pin, Roll, .250d X 2.00l, .250/.256	1
25	1252110	(000000-)	Motor Wldt, Mtg, Brush, Lh	1
26	1238366	(000000-)	Guard, Brush, Side	1
27	19066	(000000-)	Washer, Flat, 0.25b 0.56d .05, Pl, 10	4
28	06549	(000000-)	Nut, Hex, M5 X 0.80 X 16, 8.8	4
29	1227460	(000000-)	Cover, Thread, M5	4
30	1017441	(000000-)	Plate, Adapter, Brush	1
31	1225549	(000000-)	Brush, Disk, Swp, 20.0d, Polypropylene	1
32	1248278	(000000-)	Washer, Flat, 0.66b 2.50d .12, Ss	1
33	02942	(000000-)	Pin, Hair, Cotter, 0.62d .120 Wir	1
34	44851	(000000-)	Bumper, Rbr, 1.5d 1.50th 0.28h	1
35	06948	(000000-)	Screw, Hex, M6 X 1.00 X 45, 8.8	1
36	01684	(000000-)	Washer, Flat, 0.27b 0.69d .05, Ss	2
37	08712	(000000-)	Nut, Hex, Lock, M6 X 1.00, Nl, Ss	1
38	1064188	(000000-)	Circuitbreaker, 15.0a, Resetable	1

Fig. 2 – Vacuum Wand Group

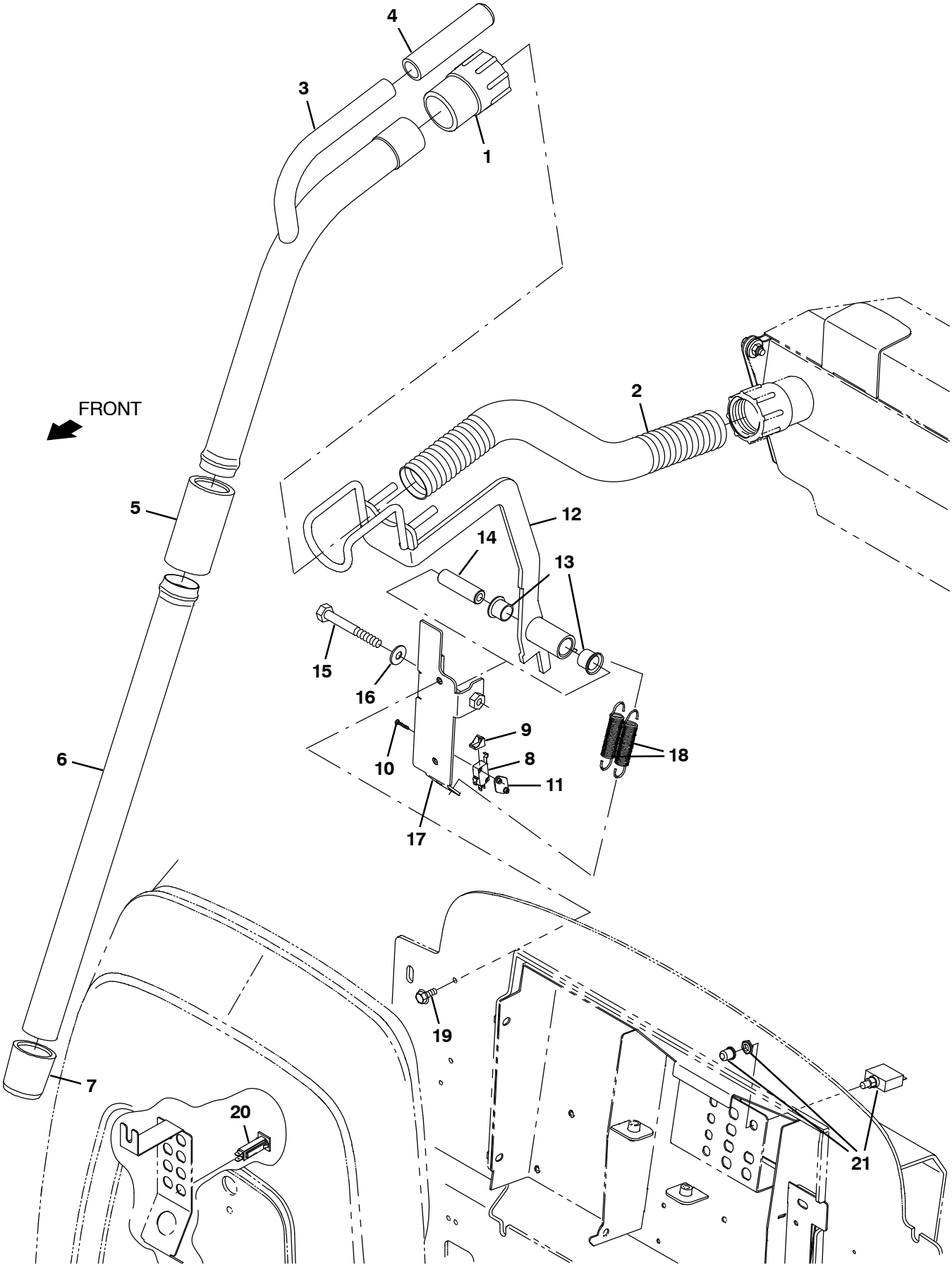

357024

Fig. 2 – Vacuum Wand Group

	Ref.	Part No.	Serial Number	Description	Qty.
	1	83285	(000000–)	Cuff, 2.3d Hose, 1.5id/2.3od 3.6l Blk	1
	2	83289	(000000–)	Hose, Flex, Vacuum, 02.0d, 024.0l	1
	3	1248334	(000000–)	Tube Wldt, Vacuum	1
	4	1248310	(000000–)	Grip, Handle	1
	5	1250310	(000000–)	Cuff, 1.75 Tube, 1.62id/Tpr 4.3l Blk	1
	6	1246570	(000000–)	Tube, Vacuum, Alm	1
	7	80299	(000000–)	Cuff, 1.7d Hose, 1.5id/Tpr 4.0l Blk	1
	8	1215716	(000000–)	Switch, 0.1a, Spdt[Micro, Gold Contacts]	1
	9	600372	(000000–)	Boot, Switch	1
	10	06923	(000000–)	Screw, Pan, Phl, M3 X 0.50 X 25, 4.8	2
	11	1013705	(000000–)	Plate, Thread, Switch, M3 Nut, 96hr Pl	1
▽		9045175	(000000–)	Hanger Kit, Vac Wand, Ci	1
▲	12	1242046	(000000–)	Handle Wldt, Pivot, Wand	1
▲	13	72763	(000000–)	Bushing, Flng, 0.75b 0.88d 0.75l	2
	14	1251867	(000000–)	Tube, 0.41id 0.75od 02.56l, Stl	1
	15	03193	(000000–)	Screw, Hex, M10 X 1.50 X 90, 8.8	1
	16	32492	(000000–)	Washer, Flat, 0.38, Std	1
	17	1242048	(000000–)	Plate Wldt, Mtg, Wand	1
	18	25737	(000000–)	Spring, Extn, 0.75od 0.07wir 03.5l	2
	19	1034731	(000000–)	Screw, Hex, M6 X 1.00 X 16, Sems, Ss	2
	20	1064184	(000000–)	Circuitbreaker, 02.5a, Resetable	1
	21	383724	(000000–)	Circuitbreaker, 25.0a, Resetable	1

Fig. 3 – Vacuum Wand Box and Fan Group

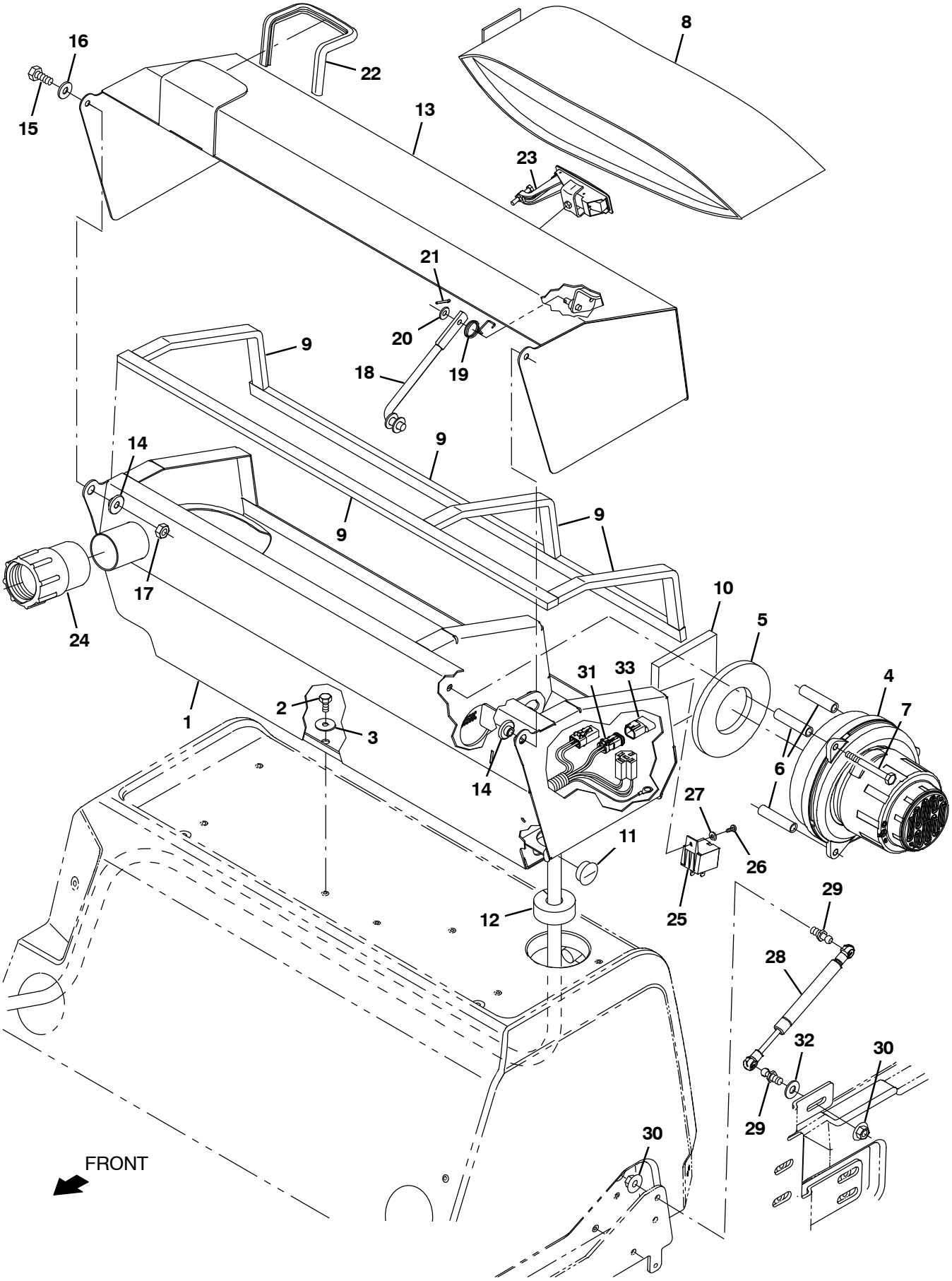

Fig. 3 – Vacuum Wand Box and Fan Group

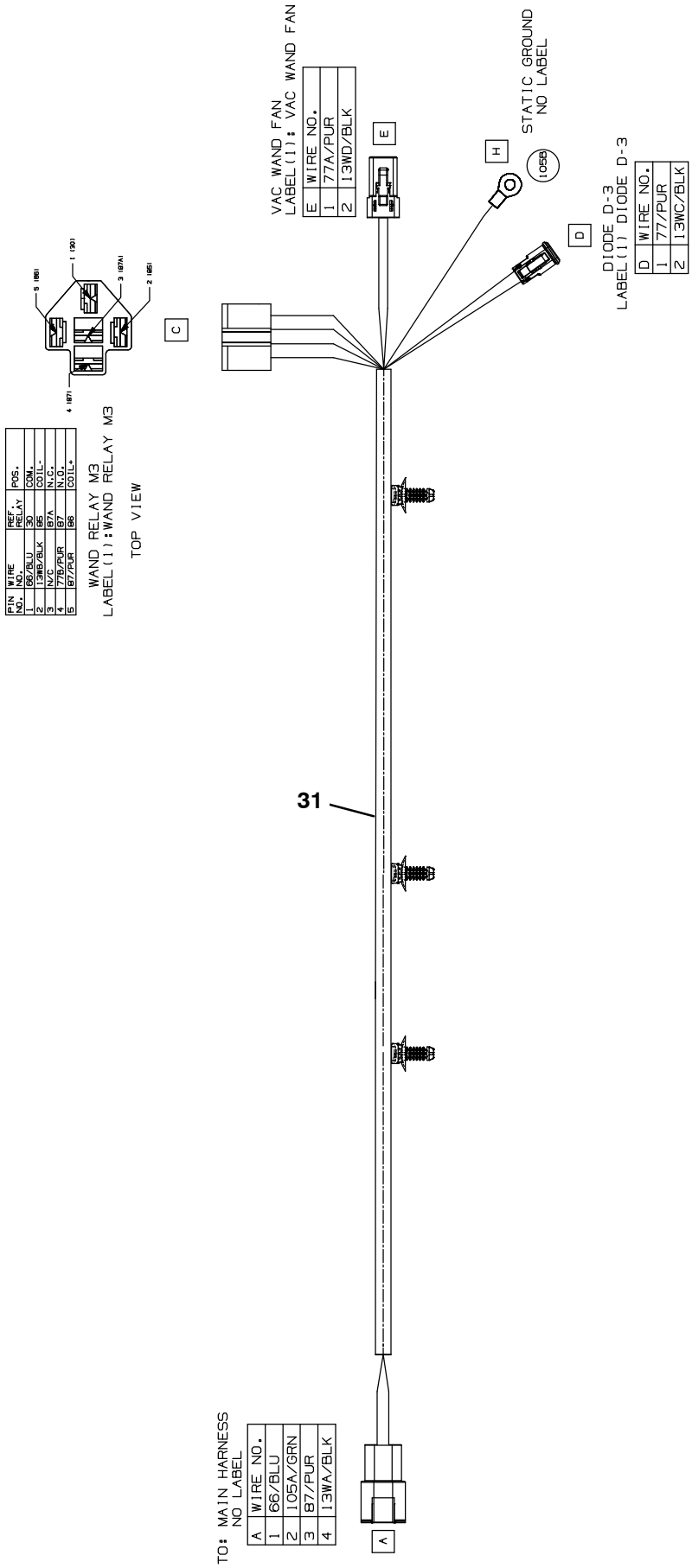

357025 – 357098

Fig. 3 – Vacuum Wand Box and Fan Group

	Ref.	Part No.	Serial Number	Description	Qty.
	1	1240661	(000000–)	Filterbox Wldt	1
	2	09744	(000000–)	Screw, Hex, M6 X 1.00 X 12, Ss	6
	3	29570	(000000–)	Washer, Flat, 0.28b 1.00d .06, Stl	6
▽	4	1200149	(000000–)	Fan, Vacuum, 6.6d, 036vdc, 1 Stage [Bpt]	1
▲		1206774	(000000–)	Brush Kit, Motor, Fan	1
	5	10912	(000000–)	Seal, Rbr, Clsd, 0.375, 5.0d 2.5h	1
	6	1249927	(000000–)	Tube, 0.38id 0.500d 2.19l, Ss	3
	7	391434	(000000–)	Screw, Hex, M6 X 1.00 X 80, Ss	3
	8	1067452	(000000–)	Bag, Vacuum, Paper [1pick=1pkg Of 10bag]	1
	9	1015220	(000000–)	Seal, Afmkt, Ure, Adh, 0.38, 0.75w 08ft	1
	10	1247432	(000000–)	Filter, Foam	1
	11	01493	(000000–)	Plug, Hole, Rnd, 1.00h .03–.12, Blk Nyl	1
	12	1244419	(000000–)	Seal, Foam	1
	13	1240961	(000000–)	Cover Wldt, Filterbox	1
	14	80950	(000000–)	Bushing, Flng, 0.32b 0.50d 0.24l, Bnz	2
	15	09010	(000000–)	Screw, Hex, M8 X 1.25 X 25, Ss	2
	16	01685	(000000–)	Washer, Flat, 0.38b 0.88d .08, Ss	2
	17	08713	(000000–)	Nut, Hex, Lock, M8 X 1.25, Nl, Ss	2
	18	223080	(000000–)	Arm Wldt, Safety, Sppt, Seat, .38d 06.5d	1
	19	59009	(000000–)	Spring, Tors, 0.75id .06wir 02.8coil	1
	20	32483	(000000–)	Washer, Flat, 0.25, Sae	1
	21	39005	(000000–)	Pin, Cotter, .094 X 0.75	1
	22	1020168	(000000–)	Molding, Afmkt, Trim, Pvc, .08 .11, 01ft	1
	23	398806	(000000–)	Latch	1
	24	83285	(000000–)	Cuff, 2.3d Hose, 1.5id/2.3od 3.6l Blk	1
	25	1229172	(000000–)	Relay, 36vdc, 025a, Spdt	1
	26	06926	(000000–)	Screw, Pan, Phl, M4 X 0.70 X 10, 4.8	1
	27	19065	(000000–)	Washer, Flat, 0.19b 0.44d .05, Pl, 08	1
	28	1245866	(000000–)	Gasspring, 90lb, 3.15strk	1
	29	1205551	(000000–)	Stud, Ball, 10mm Ball, M8x1.25 Stud	2
	30	07791	(000000–)	Nut, Hex, Flng, M8 X 1.25	2
	31	1076422	(000000–)	Harness, Ele, Wand [S16]	1
	32	32491	(000000–)	Washer, Flat, 0.31, Std	1
	33	1056982	(000000–)	Diode, Ele, Plug	1

Fig. 4 – Fire Extinguisher Kit

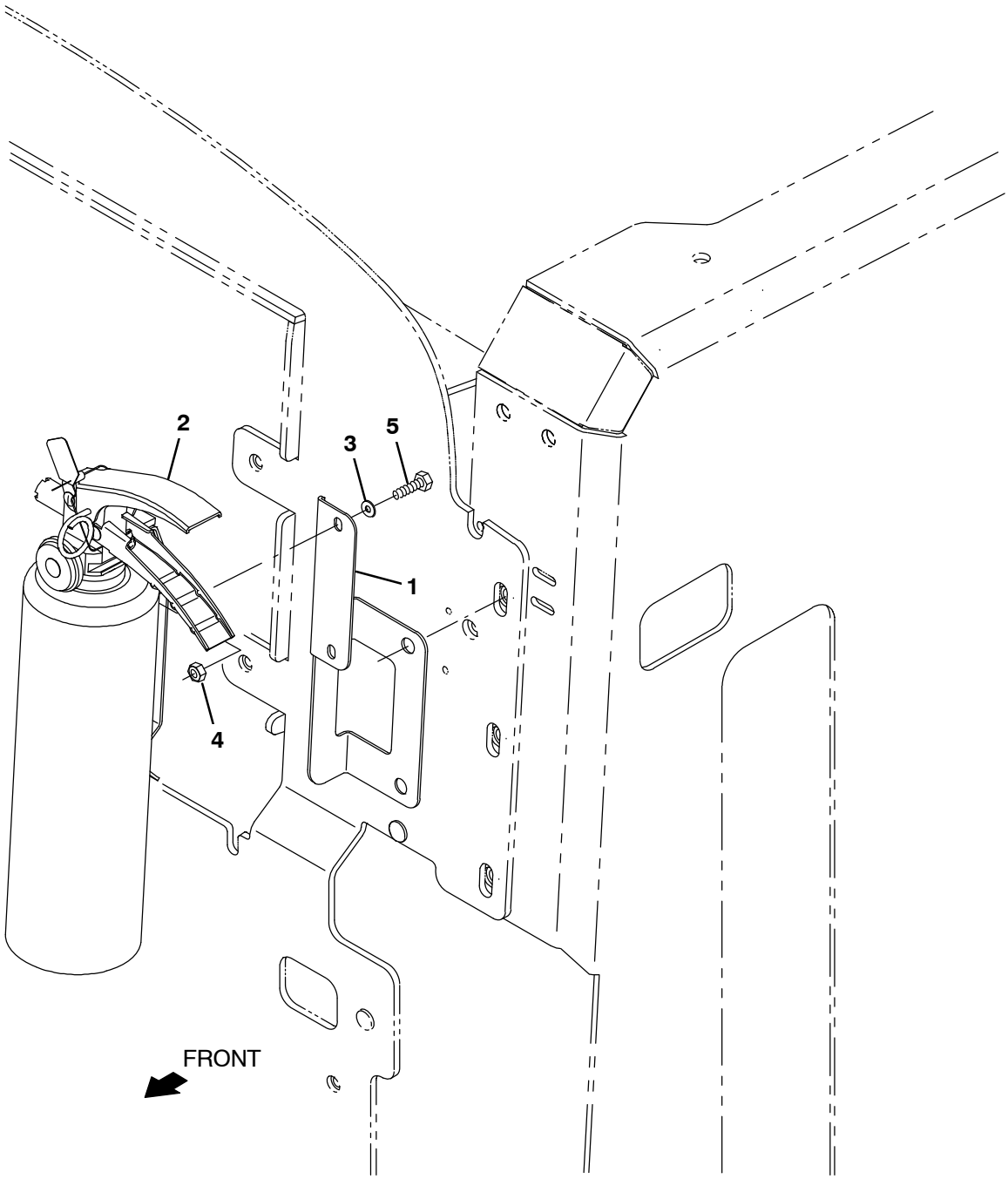

357054

	Ref.	Part No.	Serial Number	Description	Qty.
▽		9045070	(000000–)	Parts Kit, Extinguisher, Fire, Ci	1
▲	1	1250418	(000000–)	Bracket, Fire Extinguisher	1
▲	2	25312	(000000–)	Extinguisher, Fire, 2.5 Lb Dry	1
▲	3	19065	(000000–)	Washer, Flat, 0.19b 0.44d .05, Pl, 08	2
▲	4	09739	(000000–)	Nut, Hex, Lock, M5 X 0.80, Nl, Ss	2
▲	5	12312	(000000–)	Screw, Hex, M5 X 0.80 X 12, 8.8	2

Fig. 5 – Overhead Guard Kit

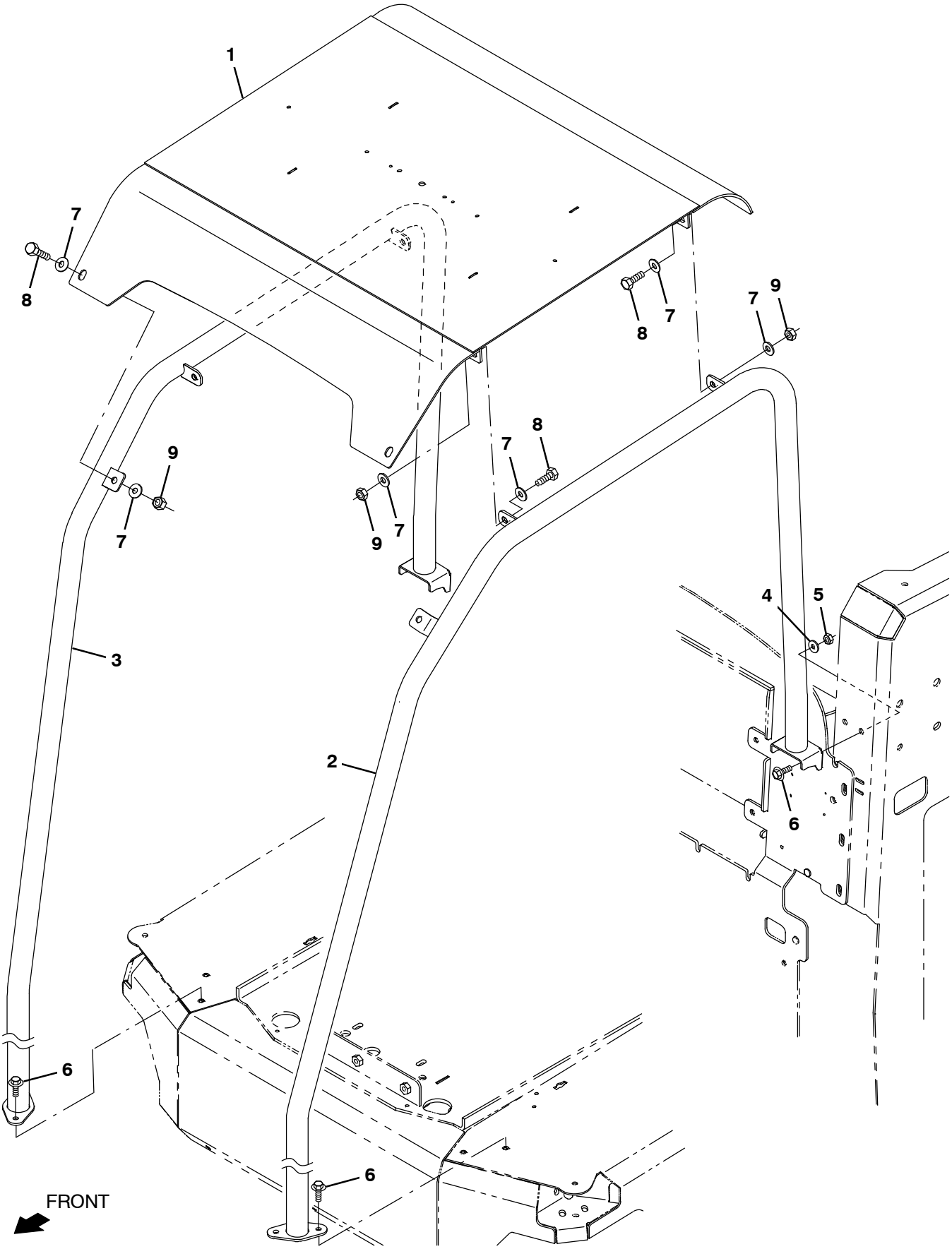

357026

Fig. 5 – Overhead Guard Kit

	Ref.	Part No.	Serial Number	Description	Qty.
▽		9045053	(000000–)	Ohg Kit, Ci [S16]	1
▲	1	1201247	(000000–)	Guard Wldt, Top, Ohg	1
▲	2	1239388	(000000–)	Tube Wldt, Ohg, Lh	1
▲	3	1239390	(000000–)	Tube Wldt, Ohg, Rh	1
▲	4	01685	(000000–)	Washer, Flat, 0.38b 0.88d .08, Ss	4
▲	5	08713	(000000–)	Nut, Hex, Lock, M8 X 1.25, Nl, Ss	4
▲	6	1072628	(000000–)	Screw, Hex, M8 X 1.25 X 25, Ss, Sems	8
▲	7	32492	(000000–)	Washer, Flat, 0.38, Std	12
▲	8	03192	(000000–)	Screw, Hex, M10 X 1.50 X 30, 8.8	6
▲	9	41430	(000000–)	Nut, Hex, Lock, M10 X 1.5, Nl	6

Fig. 6 – Single Side Brush Dust Control Group

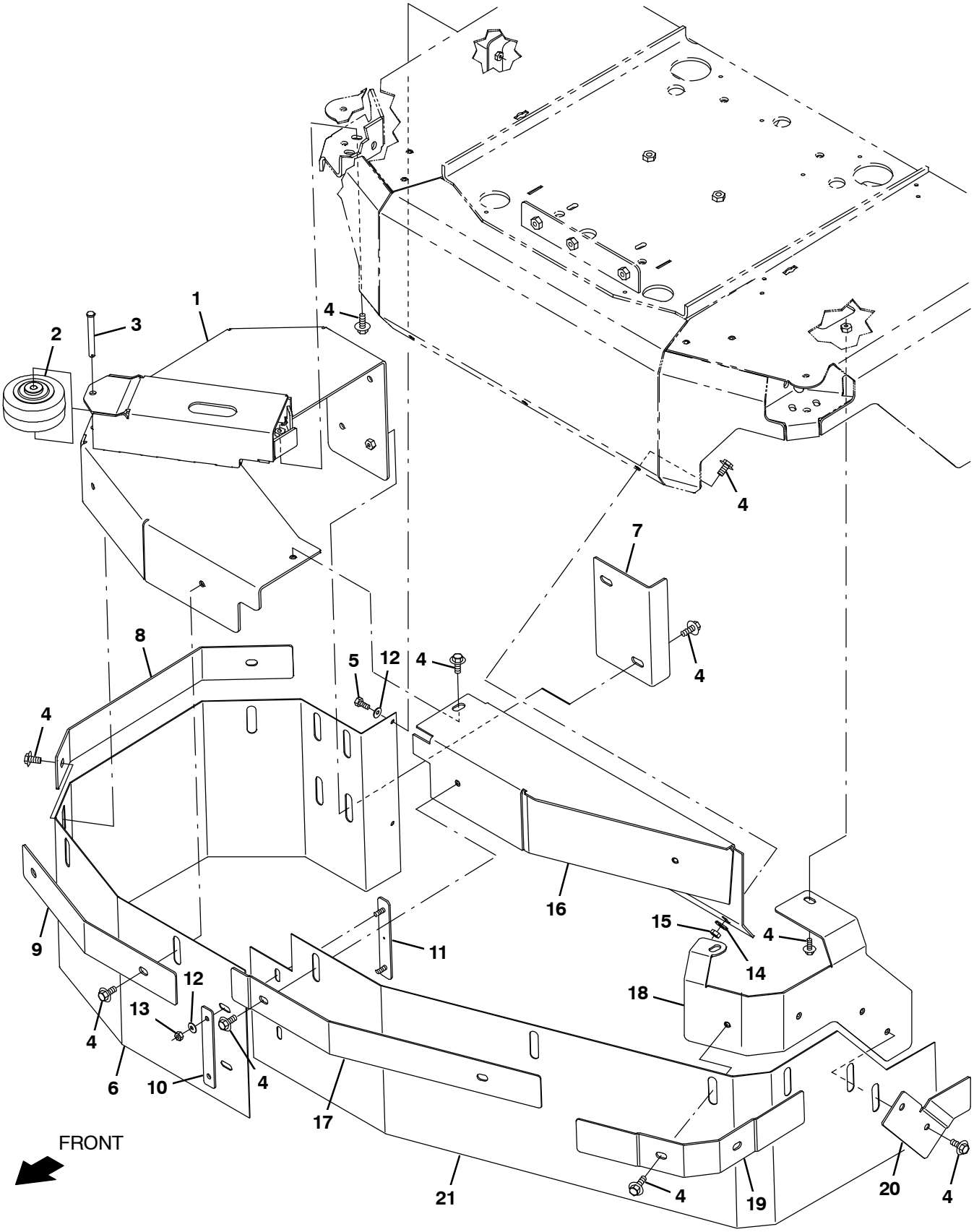

357028

Fig. 5 – Single Side Brush Dust Control Group

Ref.	Part No.	Serial Number	Description	Qty.
1	1248685	(000000–)	Bracket Wldt, Bumper, Skirt, Rh	1
2	1054100	(000000–)	Wheel, 04.0d 2.56w 0.41b	1
3	57598	(000000–)	Pin, Clevis, 0.37d X 3.25l	1
4	1020341	(000000–)	Screw, Hex, M8 X 1.25 X 20, Ss, Sems	16
5	12277	(000000–)	Screw, Hex, M6 X 1.00 X 20, Nl, Ss	2
6	1247760	(000000–)	Skirt, Brush, Side	1
7	1248217	(000000–)	Bracket, Retaining, Skirt	1
8	1248191	(000000–)	Bracket, Retaining, Skirt	1
9	1248190	(000000–)	Bracket, Retainer, Skirt	1
10	1248220	(000000–)	Plate, Retainer, Skirt, Hepa	1
11	1239938	(000000–)	Bracket Wldt, Retainer, Skirt	1
12	01684	(000000–)	Washer, Flat, 0.27b 0.69d .05, Ss	4
13	08712	(000000–)	Nut, Hex, Lock, M6 X 1.00, Nl, Ss	2
14	01685	(000000–)	Washer, Flat, 0.38b 0.88d .08, Ss	3
15	08709	(000000–)	Nut, Hex, Lock, M8 X 1.25, Nl	3
16	1249184	(000000–)	Bracket Wldt, Skirt, Front	1
17	1249321	(000000–)	Bracket, Retainer, Skirt	1
18	1249756	(000000–)	Plate Wldt, Mtg, Skirt, Lh	1
19	1249322	(000000–)	Bracket, Retainer, Skirt	1
20	1249676	(000000–)	Plate, Skirt	1
21	1249320	(000000–)	Skirt, Front	1

Fig. 7 – Brush Door Dust Control Skirts Group

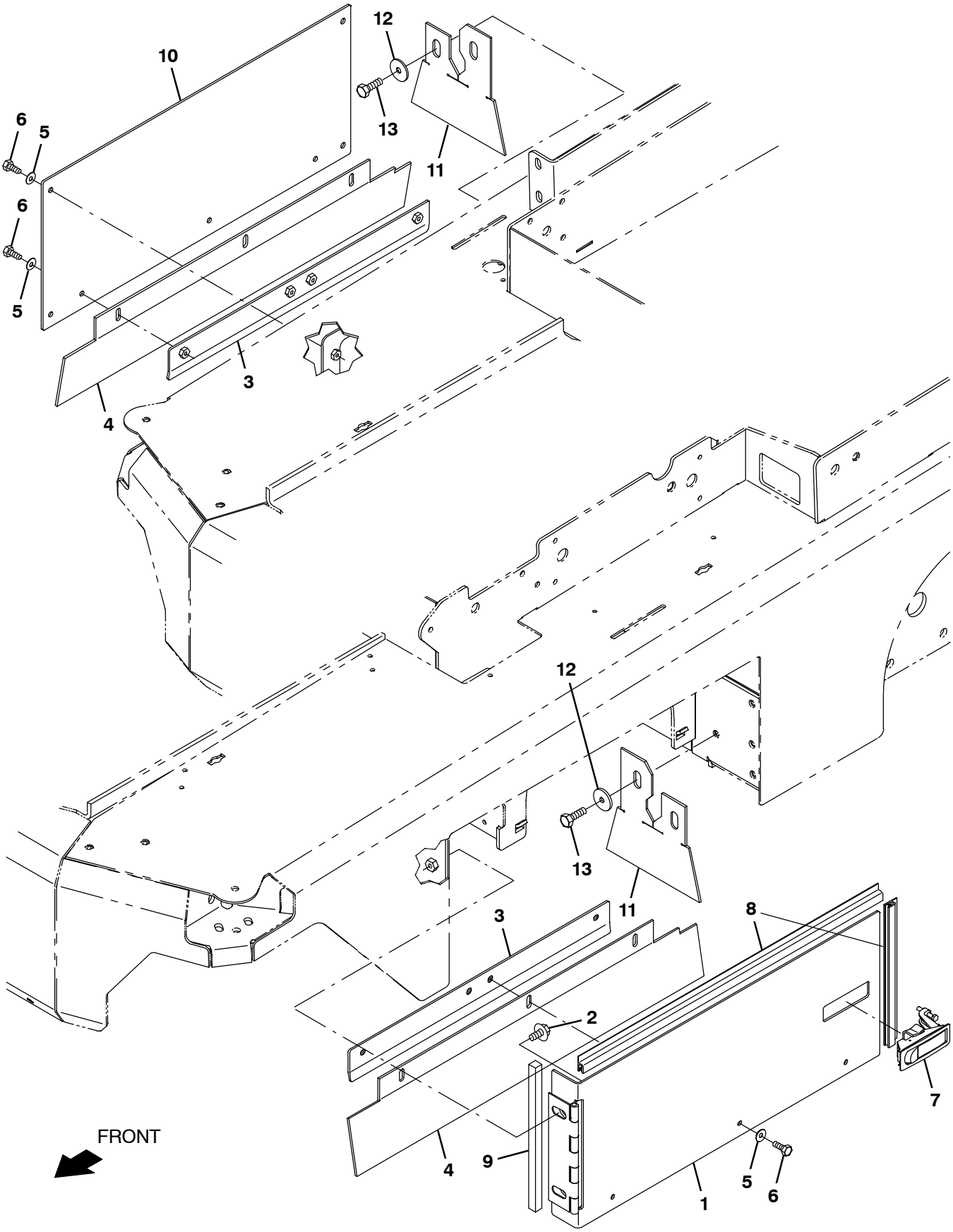

357030

Fig. 8 – Brush Door Dust Control Skirts Group

Ref.	Part No.	Serial Number	Description	Qty.
1	1240413	(000000–)	Door Wldt, Skirt	1
2	1020341	(000000–)	Screw, Hex, M8 X 1.25 X 20, Ss, Sems	2
3	1248826	(000000–)	Bracket Wldt, Retainer, Skirt, Hepa	2
4	1240417	(000000–)	Skirt, Door	2
5	01684	(000000–)	Washer, Flat, 0.27b 0.69d .05, Ss	10
6	12277	(000000–)	Screw, Hex, M6 X 1.00 X 20, Nl, Ss	10
7	398806	(000000–)	Latch	1
8	1066840	(000000–)	Seal, Afmkt, Wiper, 03ft	1
9	9045133	(000000–)	Seal, Rbr, Clsd, .50, .50w, Adh, Afmkt	1
10	1248827	(000000–)	Plate, Door, Brush, Skirt	1
11	1247551	(000000–)	Skirt, Rear, Side	2
12	1016331	(000000–)	Washer, Flat, 0.34b 1.25d .11, Ss	4
13	1016399	(000000–)	Screw, Hex, M8 X 1.25 X 30, Nl, Ss	4

Fig. 8 – Dual Side Brush Dust Control Group

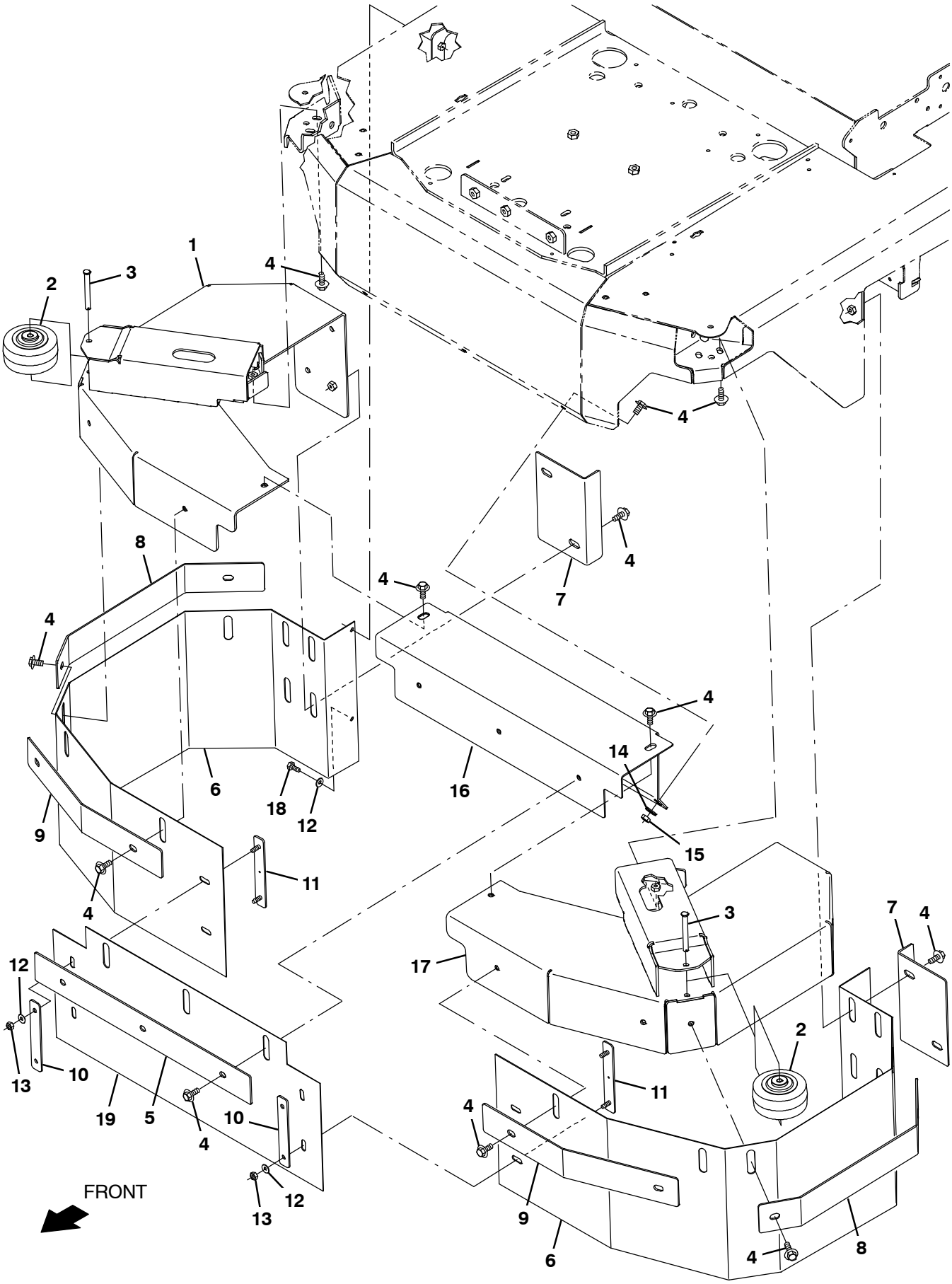

357031

Fig. 8 – Dual Side Brush Dust Control Group

Ref.	Part No.	Serial Number	Description	Qty.
1	1248685	(000000–)	Bracket Wldt, Bumper, Skirt, Rh	1
2	1054100	(000000–)	Wheel, 04.0d 2.56w 0.41b	2
3	57598	(000000–)	Pin, Clevis, 0.37d X 3.25l	2
4	1020341	(000000–)	Screw, Hex, M8 X 1.25 X 20, Ss, Sems	16
5	1240509	(000000–)	Strap, Skirt, Front	1
6	1247760	(000000–)	Skirt, Brush, Side	2
7	1248217	(000000–)	Bracket, Retaining, Skirt	2
8	1248191	(000000–)	Bracket, Retaining, Skirt	2
9	1248190	(000000–)	Bracket, Retainer, Skirt	2
10	1248220	(000000–)	Plate, Retainer, Skirt, Hepa	2
11	1239938	(000000–)	Bracket Wldt, Retainer, Skirt	2
12	01684	(000000–)	Washer, Flat, 0.27b 0.69d .05, Ss	6
13	08712	(000000–)	Nut, Hex, Lock, M6 X 1.00, Nl, Ss	4
14	01685	(000000–)	Washer, Flat, 0.38b 0.88d .08, Ss	3
15	08709	(000000–)	Nut, Hex, Lock, M8 X 1.25, Nl	3
16	1240505	(000000–)	Bracket Wldt, Skirt, Front	1
17	1240563	(000000–)	Bracket Wldt, Bumper, Skirt	1
18	12277	(000000–)	Screw, Hex, M6 X 1.00 X 20, Nl, Ss	2
19	1248082	(000000–)	Skirt, Front	1

Fig. 9 – Hepa Vacuum Fan Group

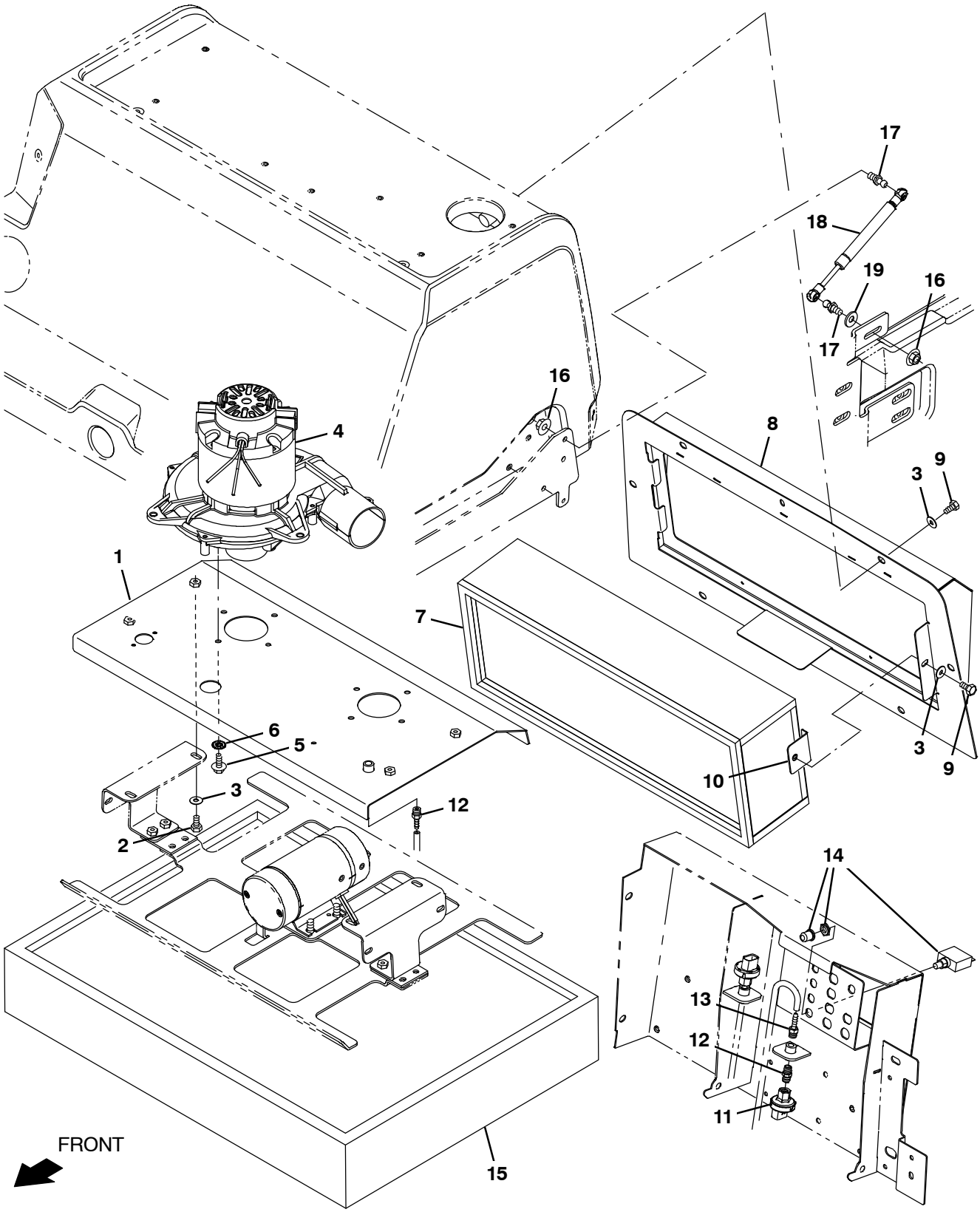

Fig. 9 – Hepa Vacuum Fan Group

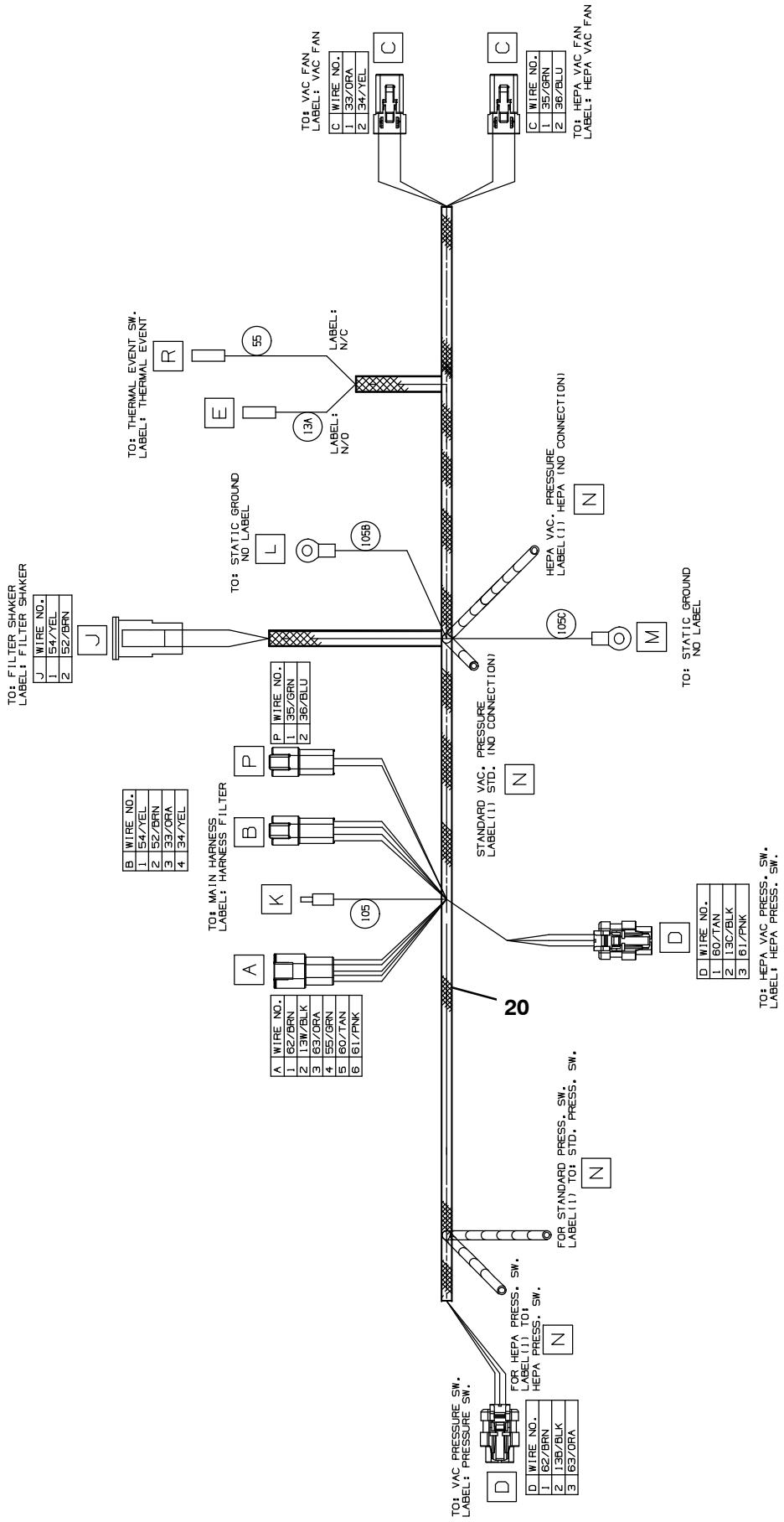

357032 - 357098 - NA

Fig. 9 - Hepa Vacuum Fan Group

	Ref.	Part No.	Serial Number	Description	Qty.
	1	1240956	(000000- 002144)	Plate Wldt, Mtg, Fan [Hepa] (HIGH DUMP)	1
	1	1256092	(002145-)	Plate Wldt, Mtg, Fan [Hepa] (HIGH DUMP)	1
	1	1240956	(000000- 001075)	Plate Wldt, Mtg, Fan [Hepa] (LOW DUMP)	1
	1	1256092	(001076-)	Plate Wldt, Mtg, Fan [Hepa] (LOW DUMP)	1
	2	11329	(000000-)	Screw, Hex, M6 X 1.00 X 16, Nl, Ss	4
	3	01684	(000000-)	Washer, Flat, 0.27b 0.69d .05, Ss	1
▽	4	1215180	(000000-)	Fan, Vacuum, 8.7d, 036vdc, 1 Stage	1
▲		1254664	(000000-)	Brush Kit, Motor, Fan	1
	5	1034731	(000000-)	Screw, Hex, M6 X 1.00 X 16, Sems, Ss	4
	6	41140	(000000-)	Washer, Lock, Int- Ext, 0.25	1
	7	1240796	(000000-)	Filter, Hepa, 21.16 X 7.50 X 4.25	1
	8	1248585	(000000-)	Cover Wldt, Fltr	1
	9	09744	(000000-)	Screw, Hex, M6 X 1.00 X 12, Ss	10
	10	1253016	(000000-)	Bracket Wldt, Mount, Fltr	1
	11	1246761	(000000-)	Sensor Assy, Pressure, 0.18 Psi	1
	12	1238921	(000000-)	Fitting, Brs, Pm02/Pm02, W/ Fltr	1
	13	40607	(000000-)	Fitting, Brs, Str, Bm03/Pm02	2
	14	383725	(000000-)	Circuitbreaker, 30.0a, Resetable	1
	15	1238116	(000000-)	Filter, Dust, Panel 4.2 X 19.2 X 26.0	1
	16	07791	(000000-)	Nut, Hex, Flng, M8 X 1.25	2
	17	1205551	(000000-)	Stud, Ball, 10mm Ball, M8x1.25 Stud	2
	18	1245866	(000000-)	Gasspring, 90lb, 3.15strk	1
	19	32491	(000000-)	Washer, Flat, 0.31, Std	1
	20	1076421	(000000-)	Harness, Ele, Vac [Hepa,S16]	1

Fig. 10 – Spot Light Group, Blue

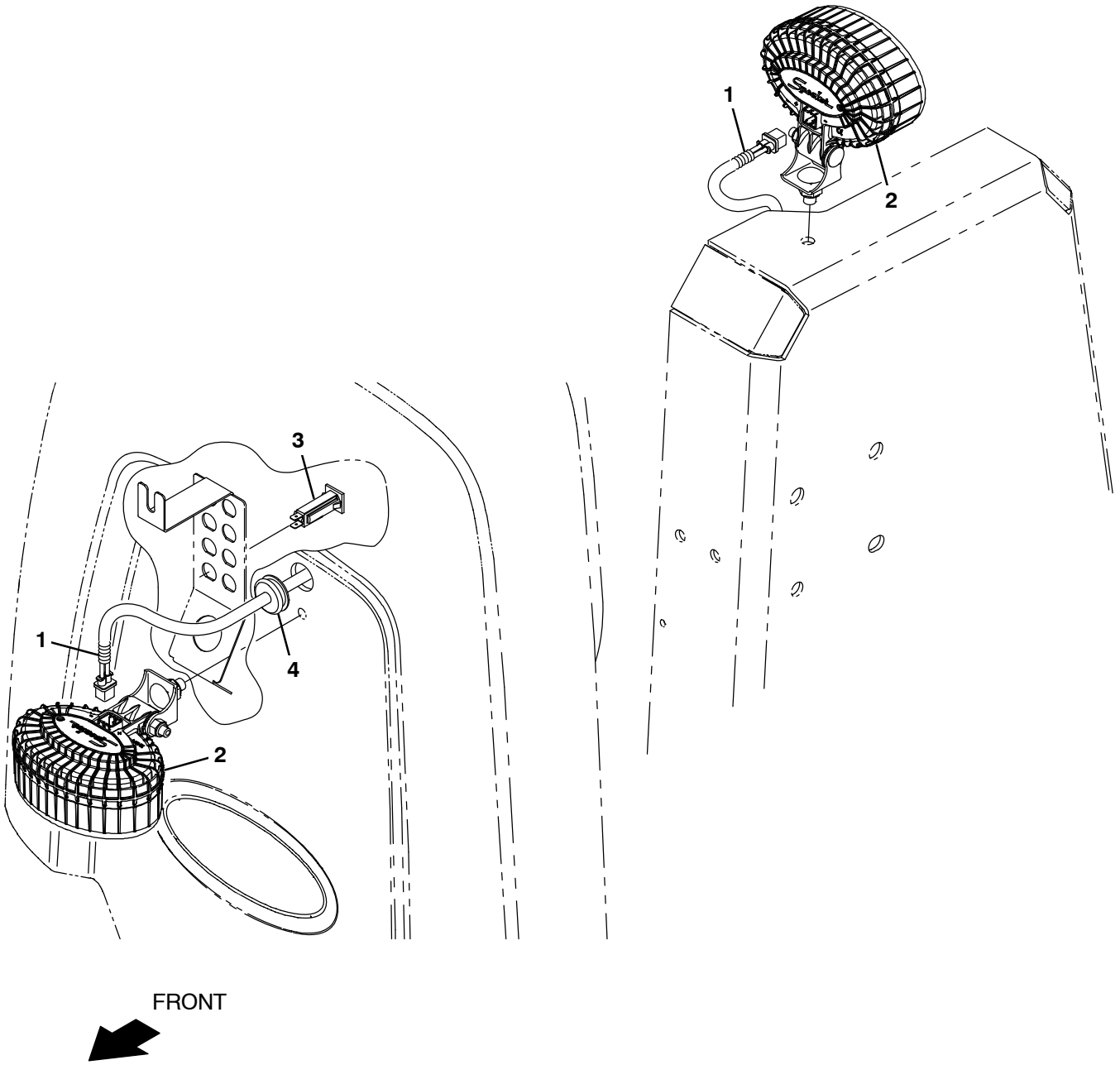

357039

Ref.	Part No.	Serial Number	Description	Qty.
1	1076666	(000000–)	Route, Harness, Lt, Blu, Rear [S16]	2
2	1240687	(000000–)	Light, Spot, Blue, Led	2
3	1064184	(000000–)	Circuitbreaker, 02.5a, Resetable	1
4	1253176	(000000–)	Grommet, Rbr, 0.38id, F/ 1.0h, .25 Matl	1

Fig. 11 – Strobe Light and Backup Alarm Group

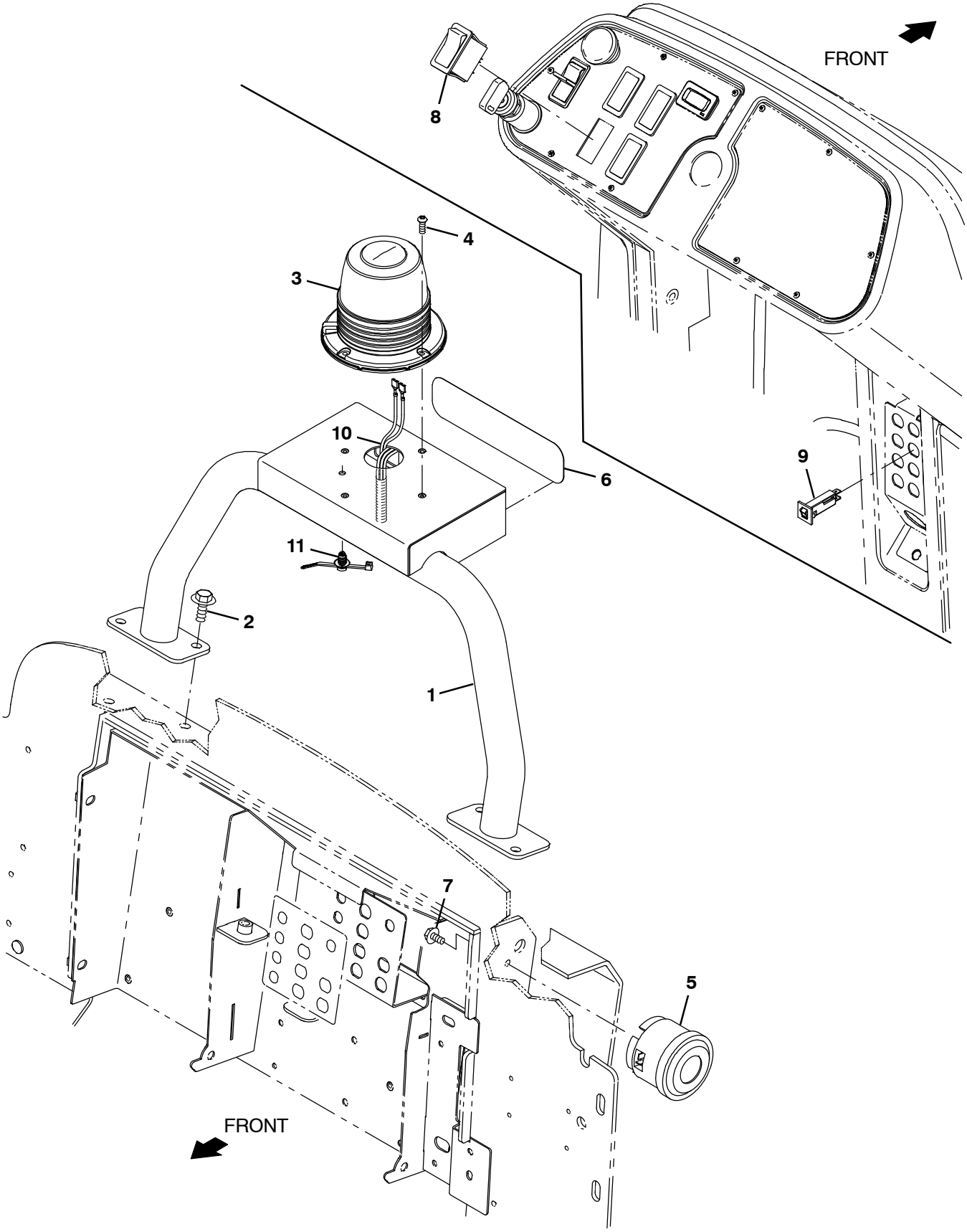

357037

Fig. 11 – Strobe Light and Backup Alarm Group

Ref.	Part No.	Serial Number	Description	Qty.
1	1251334	(000000–)	Bracket Wldt, Light	1
2	1020341	(000000–)	Screw, Hex, M8 X 1.25 X 20, Ss, Sems	4
3	1254294	(000000–)	Light, Strobe, Amb, Led	1
4	1205799	(000000–)	Screw, Btn, M5 X 0.8 X 16, 8.8, Nl, Torx	4
5	1058694	(000000–)	Alarm, Backup, 12–48vdc, Adj	1
6	1252294	(000000–)	Label, Hole, Cover, Taillight	1
7	1034731	(000000–)	Screw, Hex, M6 X 1.00 X 16, Sems, Ss	1
8	377084	(000000–)	Switch, Rocker, Prgrsv	1
9	1064184	(000000–)	Circuitbreaker, 02.5a, Resetable	1
10	1076607	(000000–)	Harness, Ele [Lights, S16]	1
11	1210807	(000000–)	Wire, Tie [W/.25” Fir Tree Clip]	1

Fig. 12 – Headlight and Tail Light Group

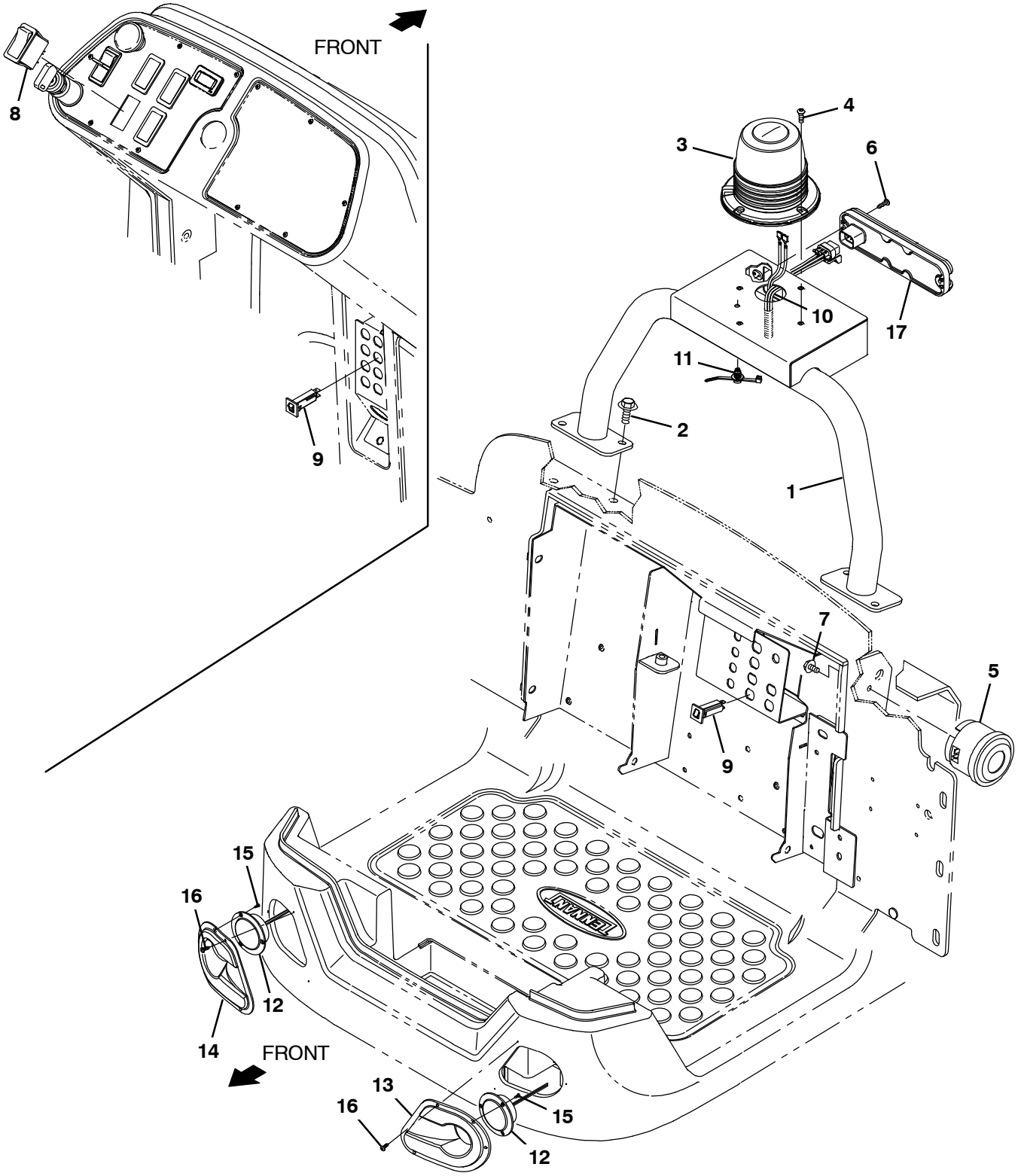

357038

Fig. 12 – Headlight and Tail Light Group

Ref.	Part No.	Serial Number	Description	Qty.
1	1251334	(000000–)	Bracket Wldt, Light	1
2	1020341	(000000–)	Screw, Hex, M8 X 1.25 X 20, Ss, Sems	4
3	1254294	(000000–)	Light, Strobe, Amb, Led	1
4	1205799	(000000–)	Screw, Btn, M5 X 0.8 X 16, 8.8, Nl, Torx	4
5	1058694	(000000–)	Alarm, Backup, 12–48vdc, Adj	1
6	06927	(000000–)	Screw, Pan, Phl, M4 X 0.70 X 16, 4.8	2
7	1034731	(000000–)	Screw, Hex, M6 X 1.00 X 16, Sems, Ss	1
8	377084	(000000–)	Switch, Rocker, Prgrsv	1
9	1064184	(000000–)	Circuitbreaker, 02.5a, Resetable	2
10	1076607	(000000–)	Harness, Ele [Lights, S16]	1
11	1210807	(000000–)	Wire, Tie [W/.25” Fir Tree Clip]	1
12	9008182	(000000–)	Light Assy, Pre–Sweep, Afmkt	2
13	1202870	(000000–)	Bezel, Headlight, Lh [W/Inserts]	1
14	1202892	(000000–)	Bezel, Headlight, Rh [W/Inserts]	1
15	06920	(000000–)	Screw, Pan, Phl, M3 X 0.50 X 10, 4.8	6
16	222267	(000000–)	Screw, Pan, Phl, 06–20 X 0.50, Fmg/Ab	6
17	1248392	(000000–)	Taillight [24–36vdc, Jw Speaker]	1

Fig. 13 – Battery Group, Wet, 36V 240Ah

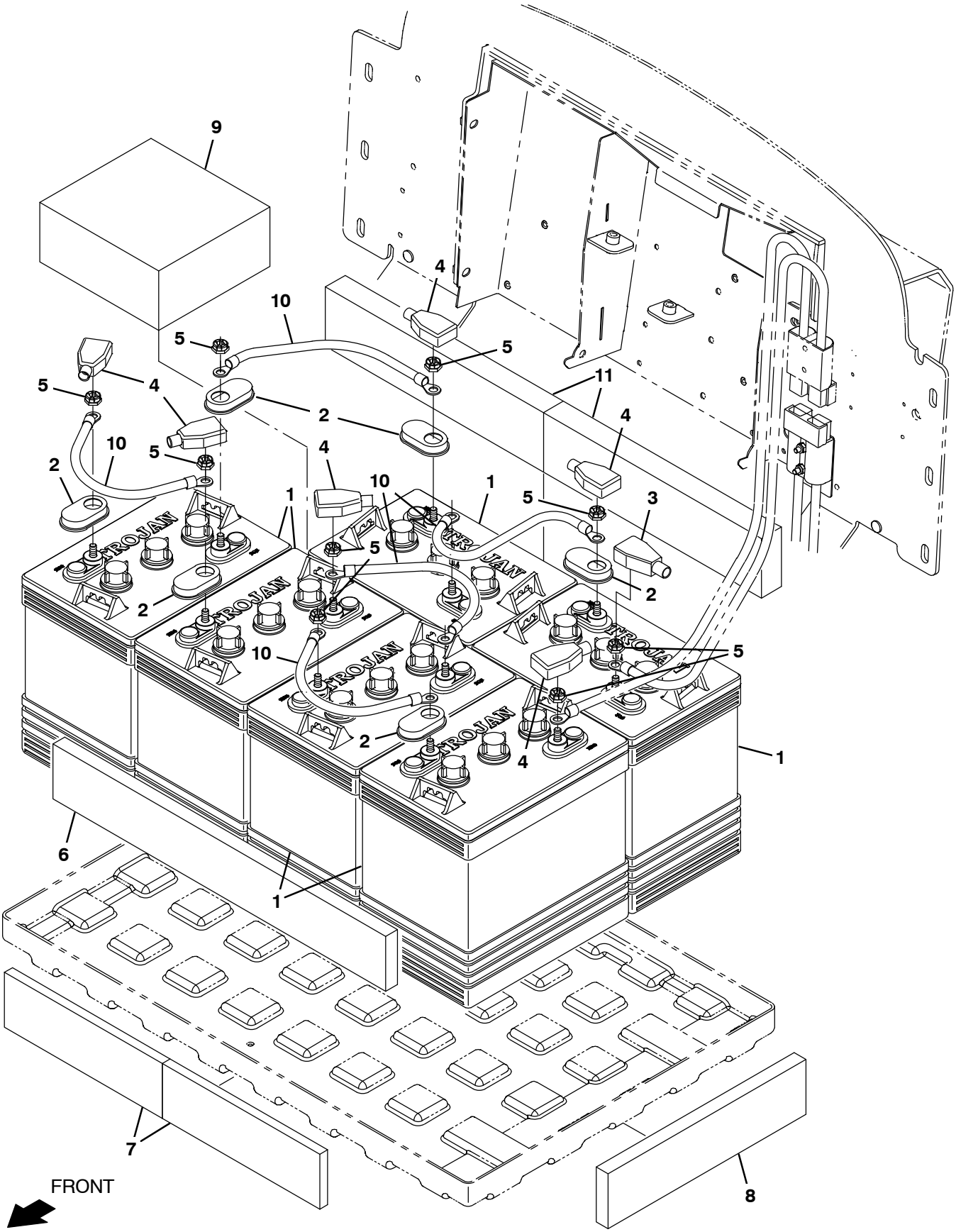

357040

Fig. 13 – Battery Group, Wet, 36V 240Ah

Ref.	Part No.	Serial Number	Description	Qty.
1	222280	(000000–)	Battery, Wet, 06vdc 240ah	6
2	1041030	(000000–)	Cap, Battery, Black	12
3	68873	(000000–)	Boot, Terminal, Battery, 02–01ga, Red	1
4	68872	(000000–)	Boot, Terminal, Battery, 02–01ga, Blk	11
5	87435	(000000–)	Nut, Hex, Flexlock, .31–18	12
6	630375	(000000–)	Spacer, Battery, Foam, 1.25 X 3.3 X 13.7	2
7	1243754	(000000–)	Spacer, Battery, 0.50 X 3.0 X 10.0	2
8	1242643	(000000–)	Spacer, Battery, 0.75 X 3.0 X 12.5	1
9	1252818	(000000–)	Spacer, Battery, Foam, 3.25 X 7.5 X 7	1
10	223356	(000000–)	Cable, 04ga 12.0l Blk .31ring /.31ring	5
11	222473	(000000–)	Spacer, Battery, 0.75 X 3.0 X 21.0	1

Fig. 14 – Battery Group, Lithium–Ion, 36V, 12.2 Kwh

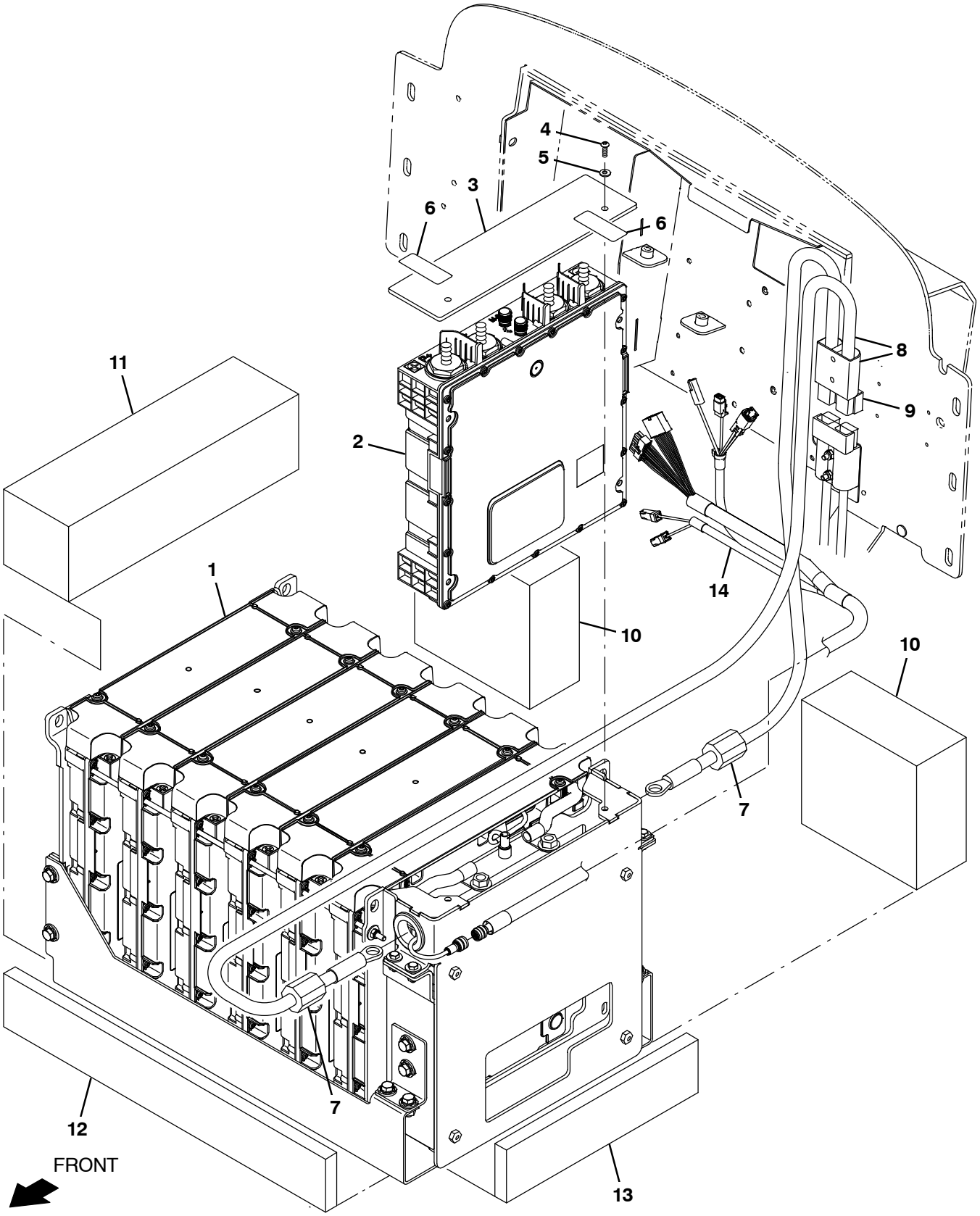

357044 – NA

Fig. 14 – Battery Group, Lithium–Ion, 36V, 12.2 Kwh

	Ref.	Part No.	Serial Number	Description	Qty.
▽	1	9019369	(000000–)	Battery Assy, Li–Ion, 36v, 12.2 Kwh	1
▲	2	1240228*	(000000–)	Controller, Battery, Li–Ion, 36vdc [Bms]	1
▲	3	1249104*	(000000–)	Plate, Cover	1
▲	4	1205799*	(000000–)	Screw, Btn, M5 X 0.8 X 16, 8.8, Nl, Torx	2
▲	5	01683*	(000000–)	Washer, Flat, 10, Ss	2
▲	6	1247763*	(000000–)	Label [Anti–Tamper]	12
▲	7	1052126*	(000000–)	Inductor, 12.7mmid [156 Imp At 25mhz]	2
▲▽	8	1076495*	(000000–)	Cable Assy, Battery, 02ga [T12,T16]	1
▲▲	9	22892*	(000000–)	Connector, Anderson, 175a, Gray	1
	10	1252818	(000000–)	Spacer, Battery, Foam, 3.25 X 7.5 X 7	2
	11	1231215	(000000–)	Spacer, Battery, 4.25 X 4.25 X 15.0	1
	12	222473	(000000–)	Spacer, Battery, 0.75 X 3.0 X 21.0	1
	13	1242643	(000000–)	Spacer, Battery, 0.75 X 3.0 X 12.5	1
	14	1254389	(000000–)	Harness, Cntrl, Battery [Lithium, S16]	1

***** Requires Tennant *True* service or an authorized Tennant service provider.

Fig. 15 – Battery Group, Lithium–Ion, 36V, 8.2 Kwh

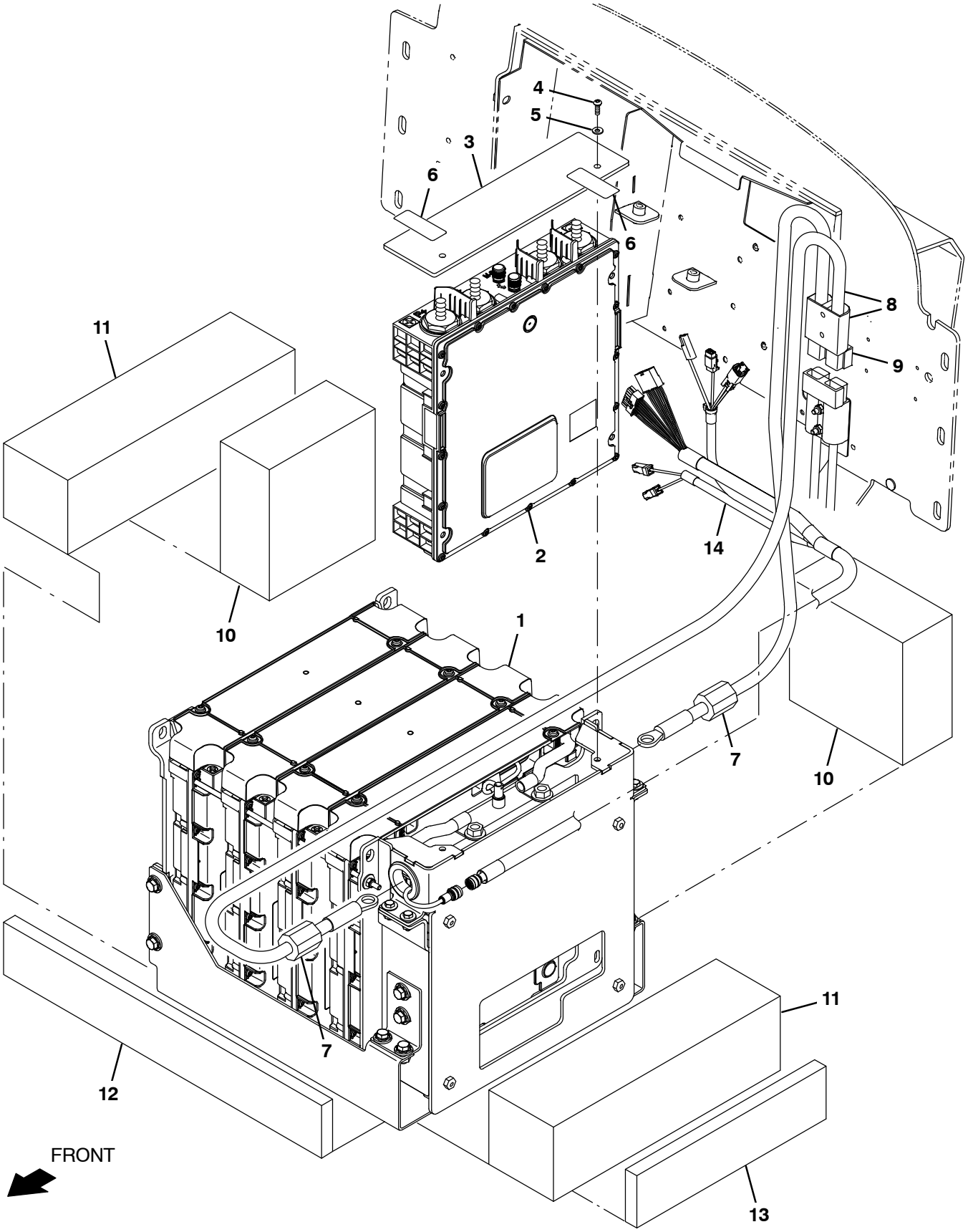

357042 – NA

Fig. 15 – Battery Group, Lithium–Ion, 36V, 8.2 Kwh

	Ref.	Part No.	Serial Number	Description	Qty.
▽	1	9019370	(000000–)	Battery Assy, Li–Ion, 36v, 8.2 Kwh	1
▲	2	1240228*	(000000–)	Controller, Battery, Li–Ion, 36vdc [Bms]	1
▲	3	1249104*	(000000–)	Plate, Cover	1
▲	4	1205799*	(000000–)	Screw, Btn, M5 X 0.8 X 16, 8.8, Nl, Torx	2
▲	5	01683*	(000000–)	Washer, Flat, 10, Ss	2
▲	6	1247763*	(000000–)	Label [Anti–Tamper]	12
▲	7	1052126*	(000000–)	Inductor, 12.7mmid [156 Imp At 25mhz]	2
▲▽	8	1076495*	(000000–)	Cable Assy, Battery, 02ga [T12,T16]	1
▲▲	9	22892*	(000000–)	Connector, Anderson, 175a, Gray	1
	10	1252818	(000000–)	Spacer, Battery, Foam, 3.25 X 7.5 X 7	2
	11	1231215	(000000–)	Spacer, Battery, 4.25 X 4.25 X 15.0	2
	12	222473	(000000–)	Spacer, Battery, 0.75 X 3.0 X 21.0	1
	13	1242643	(000000–)	Spacer, Battery, 0.75 X 3.0 X 12.5	1
	14	1254389	(000000–)	Harness, Cntrl, Battery [Lithium, S16]	1

***** Requires Tennant *True* service or an authorized Tennant service provider.

Fig. 16 – Battery Group, Lithium–Ion, 36V, 4.1 Kwh

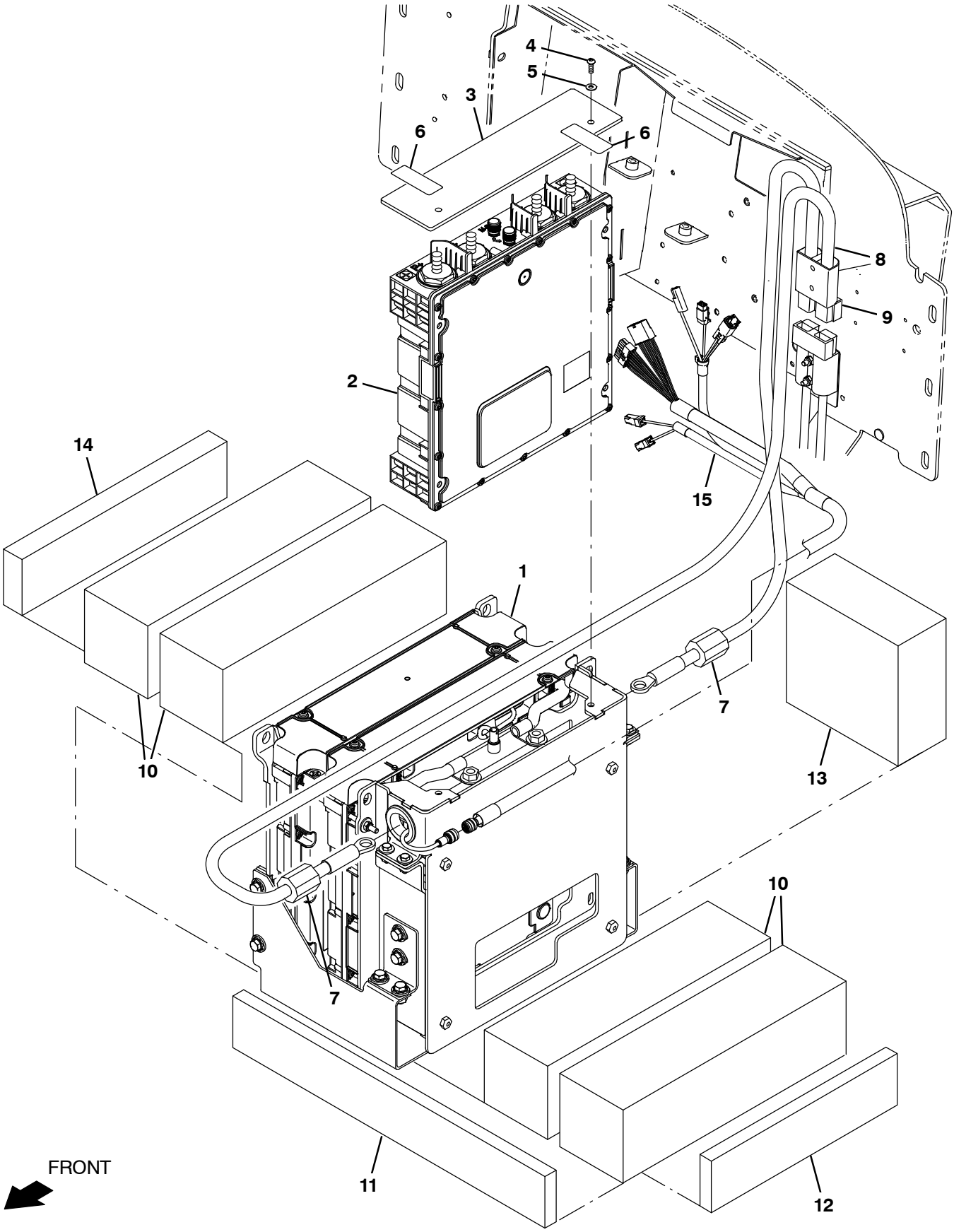

357043 – NA

Fig. 16 – Battery Group, Lithium–Ion, 36V, 4.1 Kwh

	Ref.	Part No.	Serial Number	Description	Qty.
▽	1	9019371	(000000–)	Battery Assy, Li–Ion, 36v, 4.1 Kwh	1
▲	2	1240228*	(000000–)	Controller, Battery, Li–Ion, 36vdc [Bms]	1
▲	3	1249104*	(000000–)	Plate, Cover	1
▲	4	1205799*	(000000–)	Screw, Btn, M5 X 0.8 X 16, 8.8, Nl, Torx	2
▲	5	01683*	(000000–)	Washer, Flat, 10, Ss	2
▲	6	1247763*	(000000–)	Label [Anti–Tamper]	12
▲	7	1052126*	(000000–)	Inductor, 12.7mmid [156 Imp At 25mhz]	2
▲▽	8	1076495*	(000000–)	Cable Assy, Battery, 02ga [T12,T16]	1
▲▲	9	22892*	(000000–)	Connector, Anderson, 175a, Gray	1
	10	1231215	(000000–)	Spacer, Battery, 4.25 X 4.25 X 15.0	4
	11	222473	(000000–)	Spacer, Battery, 0.75 X 3.0 X 21.0	1
	12	1242643	(000000–)	Spacer, Battery, 0.75 X 3.0 X 12.5	1
	13	1252818	(000000–)	Spacer, Battery, Foam, 3.25 X 7.5 X 7	1
	14	630375	(000000–)	Spacer, Battery, Foam, 1.25 X 3.3 X 13.7	1
	15	1254389	(000000–)	Harness, Cntrl, Battery [Lithium, S16]	1

***** Requires Tennant *True* service or an authorized Tennant service provider.

Fig. 17 – On–Board Battery Charger Group

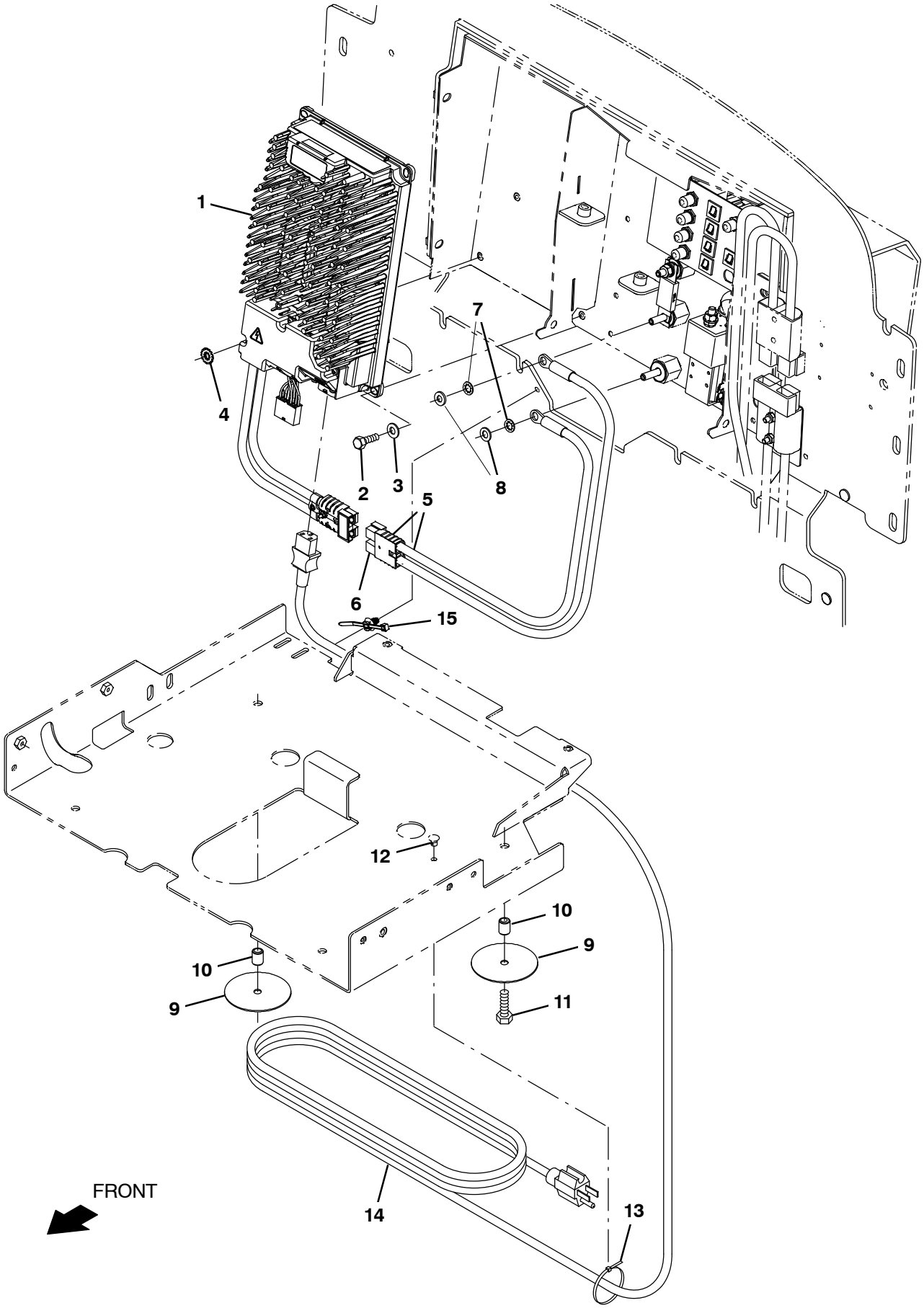

357055

Fig. 17 – On–Board Battery Charger Group

	Ref.	Part No.	Serial Number	Description	Qty.
	1	1229621	(000000–)	Charger, 36vdc 900w 100–240vac [On Brd]	1
	1	1229475	(000000–)	Charger 36vdc 1200w 100–240vac [On Brd] (Not Shown)	1
	2	12277	(000000–)	Screw, Hex, M6 X 1.00 X 20, Nl, Ss	4
	3	01684	(000000–)	Washer, Flat, 0.27b 0.69d .05, Ss	4
	4	41140	(000000–)	Washer, Lock, Int–Ext, 0.25	1
▽	5	1075458	(000000–)	Harness, Chrgr, 10ga [M8 Ring/M8 Ring]	1
▲	6	130155	(000000–)	Connector, Battery, 6ga 50a, Gray[2cont]	1
	7	32984	(000000–)	Washer, Lock, Int, 0.31	2
	8	39349	(000000–)	Washer, Flat, 0.31, Sae	2
	9	1236882	(000000–)	Plate, Retainer	2
	10	80395	(000000–)	Sleeve, P/M, 0.32b 0.50d 0.7l [430ss]	2
	11	09023	(000000–)	Screw, Hex, M8 X 1.25 X 35, Fl, Ss	2
	12	1202868	(000000–)	Clip, Tie, 0.25d, Plstc	1
	13	763114	(000000–)	Tie, Cable, 11.3l, 2.75d Max	1
	14	1073882	(000000–)	Cord, Power, 14/3, 15a, 15ft Blk [Us]	1
	15	1210807	(000000–)	Wire, Tie [W/.25 Fir Tree Clip]	1

Fig. 18 – Off–Board Battery Chargers Group

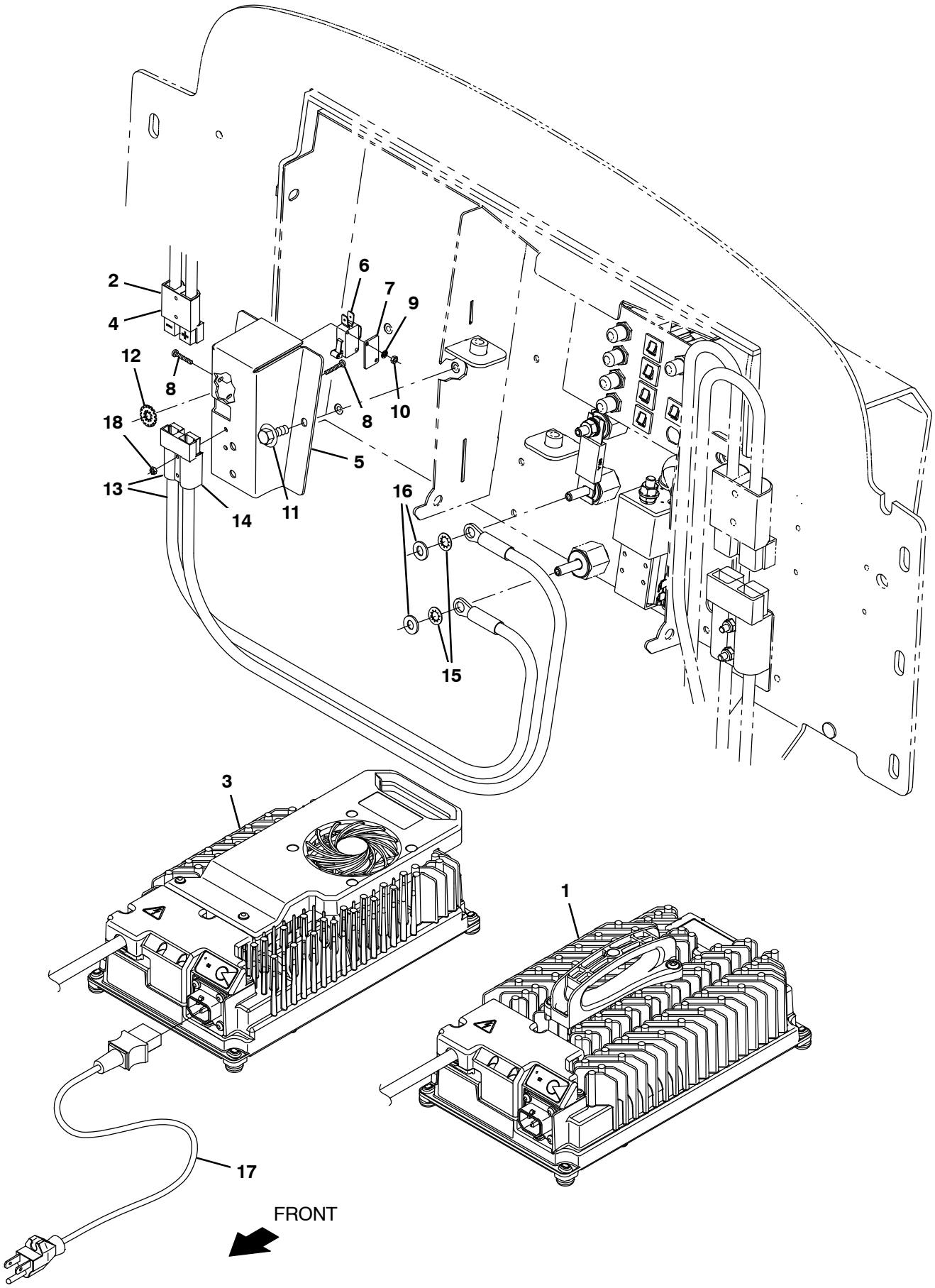

357057

Fig. 18 – Off–Board Battery Chargers Group

	Ref.	Part No.	Serial Number	Description	Qty.
▽	1	1234826	(000000–)	Charger, 36vdc 900w 100–240vac [Off Brd]	1
▲	2	130155	(000000–)	Connector, Battery, 6ga 50a, Gray[2cont]	1
▽	3	9042253	(000000–)	Charger Kit, Off Board [T600/T600e]	1
▲	4	130155	(000000–)	Connector, Battery, 6ga 50a, Gray[2cont]	1
	5	1239716	(000000–)	Bracket, Mount, Switch	1
	6	600437	(000000–)	Switch, Snap, 15a, Rlr	1
	7	601359	(000000–)	Plate, Backing, Switch	1
	8	06922	(000000–)	Screw, Pan, Phl, M3 X 0.50 X 20, 4.8	4
	9	39658	(000000–)	Washer, Lock, Int, 04	2
	10	579211	(000000–)	Nut, Hex, Lock, M3 X 0.50, Nl, Ss	2
	11	1034731	(000000–)	Screw, Hex, M6 X 1.00 X 16, Sems, Ss	2
	12	41140	(000000–)	Washer, Lock, Int–Ext, 0.25	1
▽	13	1075458	(000000–)	Harness, Chrgr, 10ga [M8 Ring/M8 Ring]	1
▲	14	130155	(000000–)	Connector, Battery, 6ga 50a, Gray[2cont]	1
	15	32984	(000000–)	Washer, Lock, Int, 0.31	2
	16	39349	(000000–)	Washer, Flat, 0.31, Sae	2
	17	1025642	(000000–)	Cord, Power, 16/3, 15ft Blk [Us]	1
	18	579211	(000000–)	Nut, Hex, Lock, M3 X 0.50, Nl, Ss	2

Fig. 19 – Off–Board Lithium–Ion Battery Charger Group

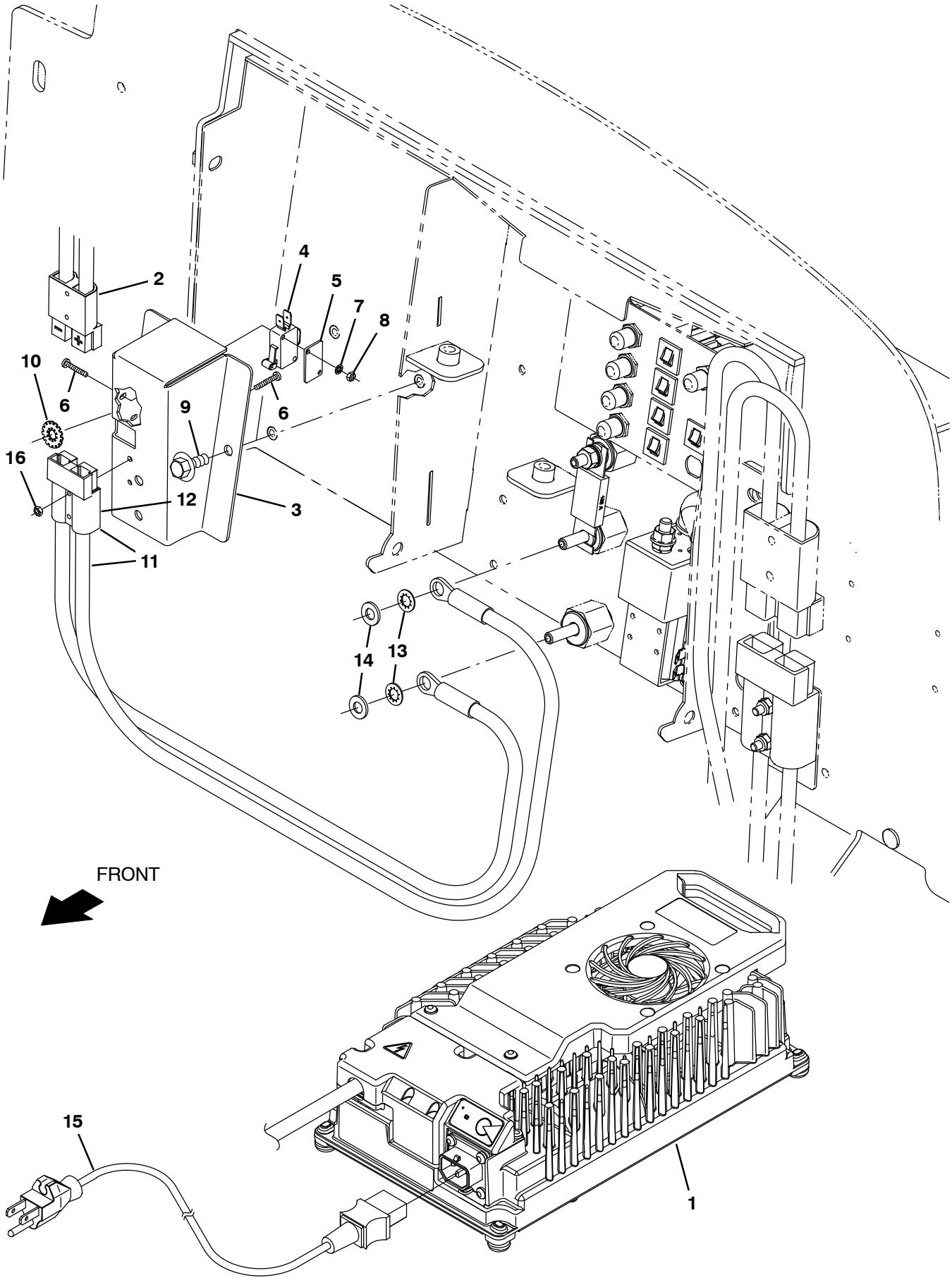

357058 – NA

Fig. 19 – Off–Board Lithium–Ion Battery Chargers Group

	Ref.	Part No.	Serial Number	Description	Qty.
▽	1	1242861	(000000–)	Charger, 36vdc 1200w 100–240vac[Off Brd]	1
▲	2	130155	(000000–)	Connector, Battery, 6ga 50a, Gray[2cont]	1
	3	1239716	(000000–)	Bracket, Mount, Switch	1
	4	600437	(000000–)	Switch, Snap, 15a, Rlr	1
	5	601359	(000000–)	Plate, Backing, Switch	1
	6	06922	(000000–)	Screw, Pan, Phl, M3 X 0.50 X 20, 4.8	4
	7	39658	(000000–)	Washer, Lock, Int, 04	2
	8	01754	(000000–)	Nut, Hex, Std, M3 X 0.50, 8	2
	9	1034731	(000000–)	Screw, Hex, M6 X 1.00 X 16, Sems, Ss	2
	10	41140	(000000–)	Washer, Lock, Int–Ext, 0.25	1
▽	11	1075458	(000000–)	Harness, Chrgr, 10ga [M8 Ring/M8 Ring]	1
▲	12	130155	(000000–)	Connector, Battery, 6ga 50a, Gray[2cont]	1
	13	32984	(000000–)	Washer, Lock, Int, 0.31	2
	14	39349	(000000–)	Washer, Flat, 0.31, Sae	2
	15	1025642	(000000–)	Cord, Power, 16/3, 15ft Blk [Us]	1
	16	579211	(000000–)	Nut, Hex, Lock, M3 X 0.50, Nl, Ss	2

Fig. 20 – Smart–Fill Automatic Battery Watering Group

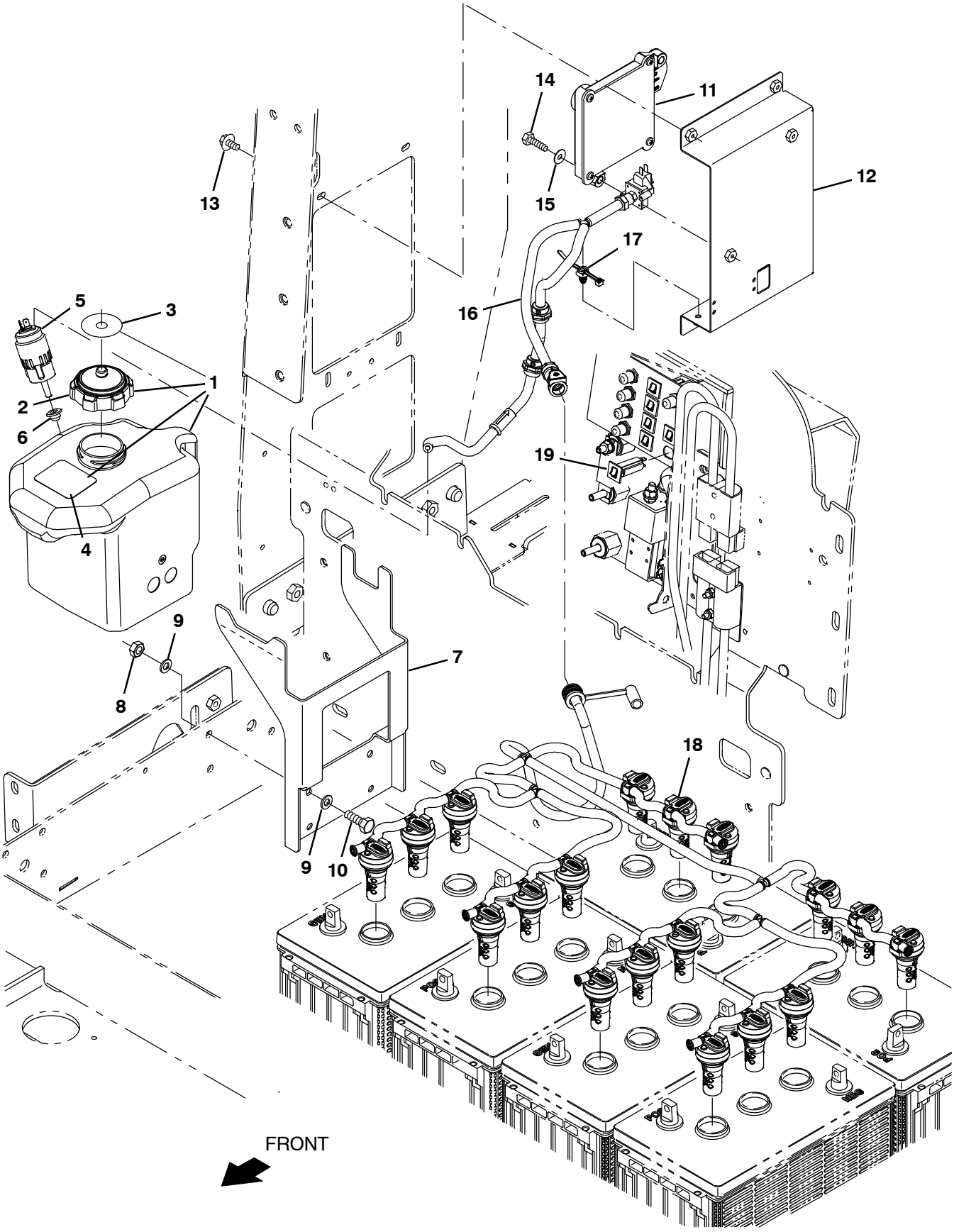

357049 – NA

Fig. 20 – Smart–Fill Automatic Battery Watering Group

	Ref.	Part No.	Serial Number	Description	Qty.
▽	1	9045064	(000000–)	Tank Assy, Abw 4.0l	1
▲	2	1235763	(000000–)	Cap, Tank, 2.25 [Blue,Vented W/Lanyard]	1
▲	3	1224988	(000000–)	Label, Automated Battery Watering	1
▲	4	1233633	(000000–)	Label, Detgt [Do Not Add]	1
▲	5	1231018	(000000–)	Pump, In–Tank, 13.5vdc 3.5lpm	1
▲	6	1231338	(000000–)	Grommet, Pump	1
	7	1239470	(000000–)	Bracket, Mount, Tank [Abw]	1
	8	08709	(000000–)	Nut, Hex, Lock, M8 X 1.25, Nl	4
	9	39349	(000000–)	Washer, Flat, 0.31, Sae	8
	10	09010	(000000–)	Screw, Hex, M8 X 1.25 X 25, Ss	4
	11	9016770*	(000000–)	Controller Kit, Battery, 24vdc, Ci [Abw]	1
	12	1239279	(000000–)	Bracket Wldt, Mount, Abw	1
	13	1034731	(000000–)	Screw, Hex, M6 X 1.00 X 16, Sems, Ss	4
	14	09007	(000000–)	Screw, Hex, M6 X 1.00 X 25, Ss	2
	15	01684	(000000–)	Washer, Flat, 0.27b 0.69d .05, Ss	2
	16	1246536	(000000–)	Delivery Assy, Water, Battery	1
	17	1210807	(000000–)	Wire, Tie [W/.25” Fir Tree Clip]	1
	18	1248178	(000000–)	Distribution Assy, Water, Battery	1
	19	1064184	(000000–)	Circuitbreaker, 02.5A, Resetable	1

***** Requires Tennant *True* service or an authorized Tennant service provider.

*****This kit is intended for use with Trojan® Lead Acid Batteries Only.

Fig. 21 – Manual Battery Watering System

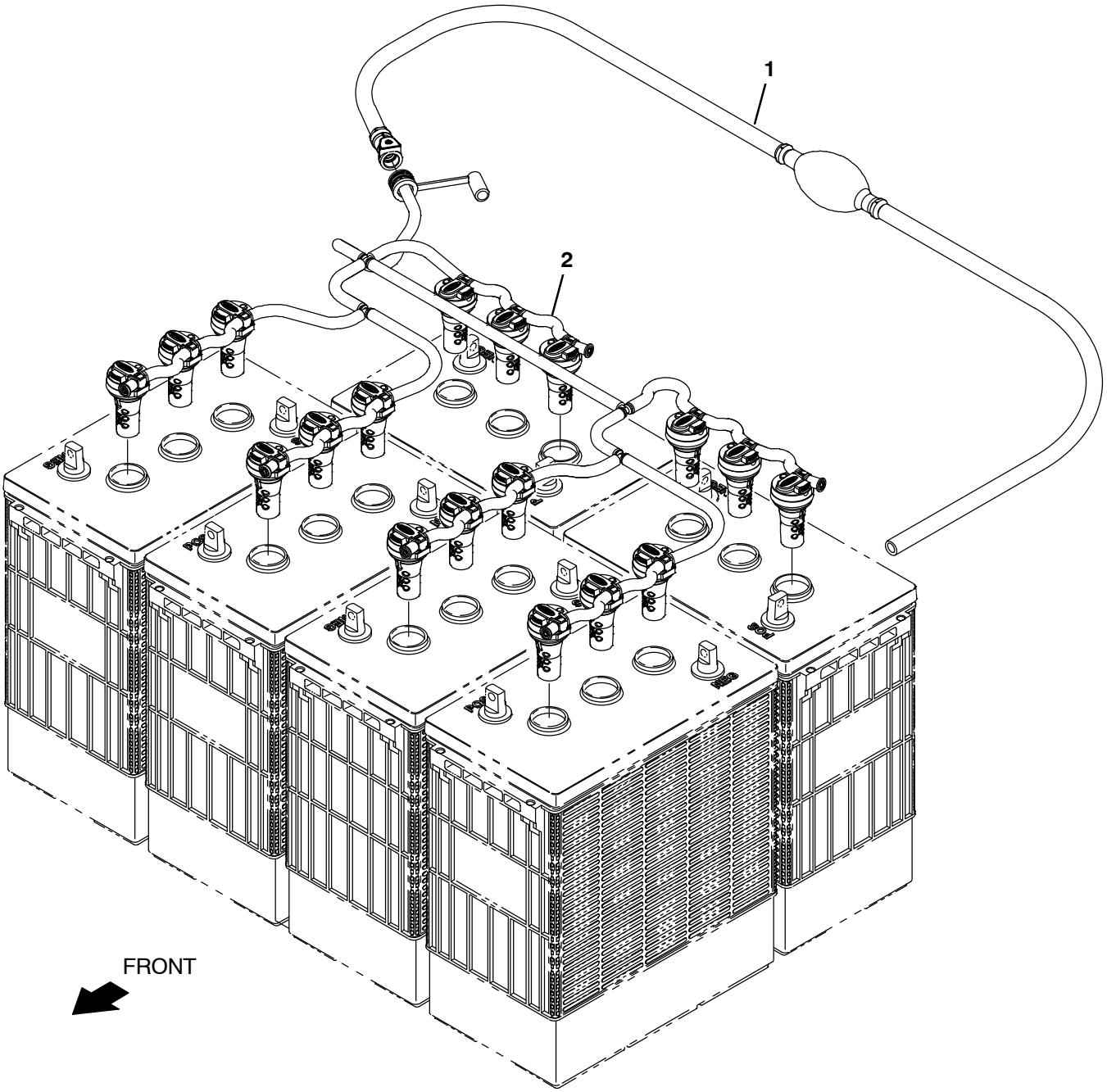

357051 – NA

	Ref.	Part No.	Serial Number	Description	Qty.
▽		9045074	(000000–)	Fill Kit, Battery, Manual, Ci [S16]	1
▲	1	1236295	(000000–)	Pump, Hand, Battery	1
▲	2	1248178	(000000–)	Distribution Assy, Water, Battery	1
▲		1253250	(000000–)	Label, Tag, Battery [Bwt Watering]	1
▲		130773	(000000–)	Tie, Cable, Nyl, 11.0l, .14w, 3.0 Max. D	2

*This kit is intended for use with Trojan® Lead Acid Batteries Only.

Fig. 22 – Carpet Care Group

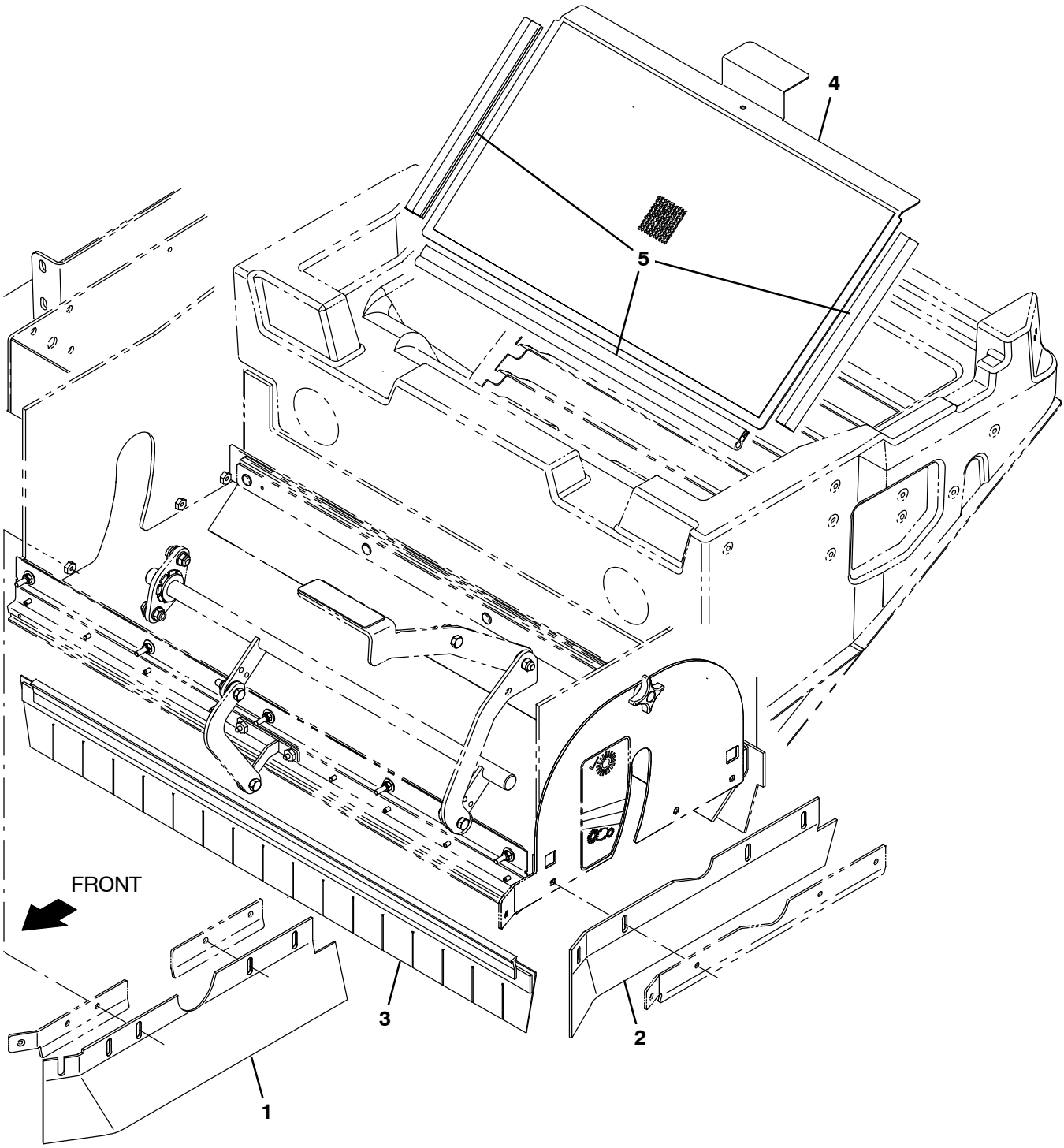

357052 – NA

	Ref.	Part No.	Serial Number	Description	Qty.
	1	1249621	(000000–)	Skirt, Swp, Rh [Carpet]	1
	2	1249622	(000000–)	Skirt, Swp, Lh [Carpet]	1
	3	1255297	(000000–)	Skirt Assy, Front [Light Litter]	1
▽		9045178	(000000–)	Kit, Lint Screen, CI	1
▲	4	1246587	(000000–)	Filter Wldt, Screen	1
▲	5	1031632	(000000–)	Seal, Afmkt, Bulb, Str, .50d F/11ga 08ft	1

Fig. 23 – Low Dump Hopper Bins Kit

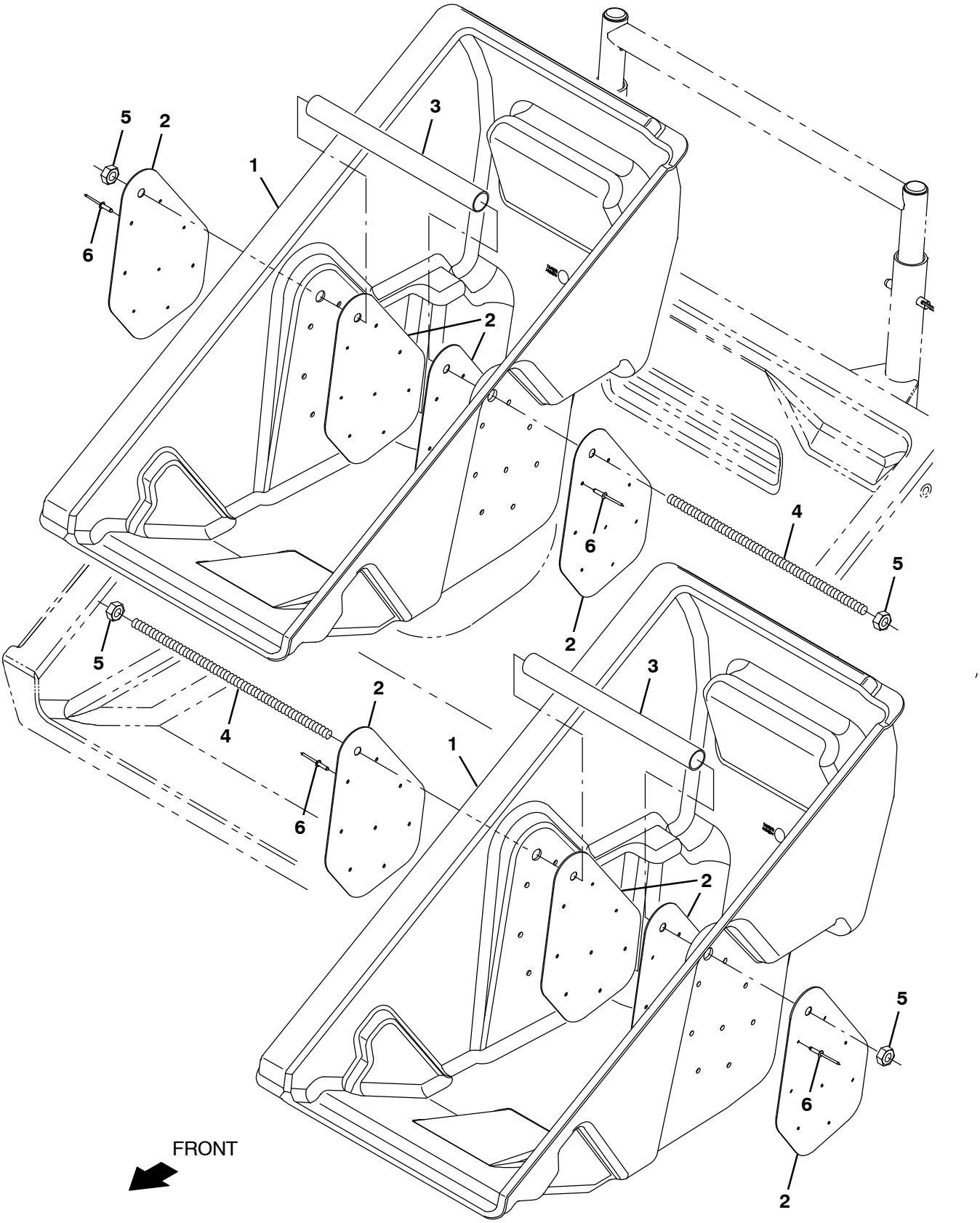

357053

Fig. 23 – Low Dump Hopper Bins Kit

	Ref.	Part No.	Serial Number	Description	Qty.
▽		9045167	(000000–)	Bin, Low Dump, Ci	2
▲	1	1246078	(000000–)	Hopper, Removable	1
▲	2	1246394	(000000–)	Plate, Handle	4
▲	3	1246397	(000000–)	Tube, Handle	1
▲	4	1246891	(000000–)	Rod, Thrd, Full, M10 X 1.5 12.2l	1
▲	5	07787	(000000–)	Nut, Hex, Std, M10 X 1.50, Ss	2
▲	6	1021677	(000000–)	Rivet, Blind, .154d X 0.55 X .38d, Ss	16

Fig. 24 – Telemetry Group

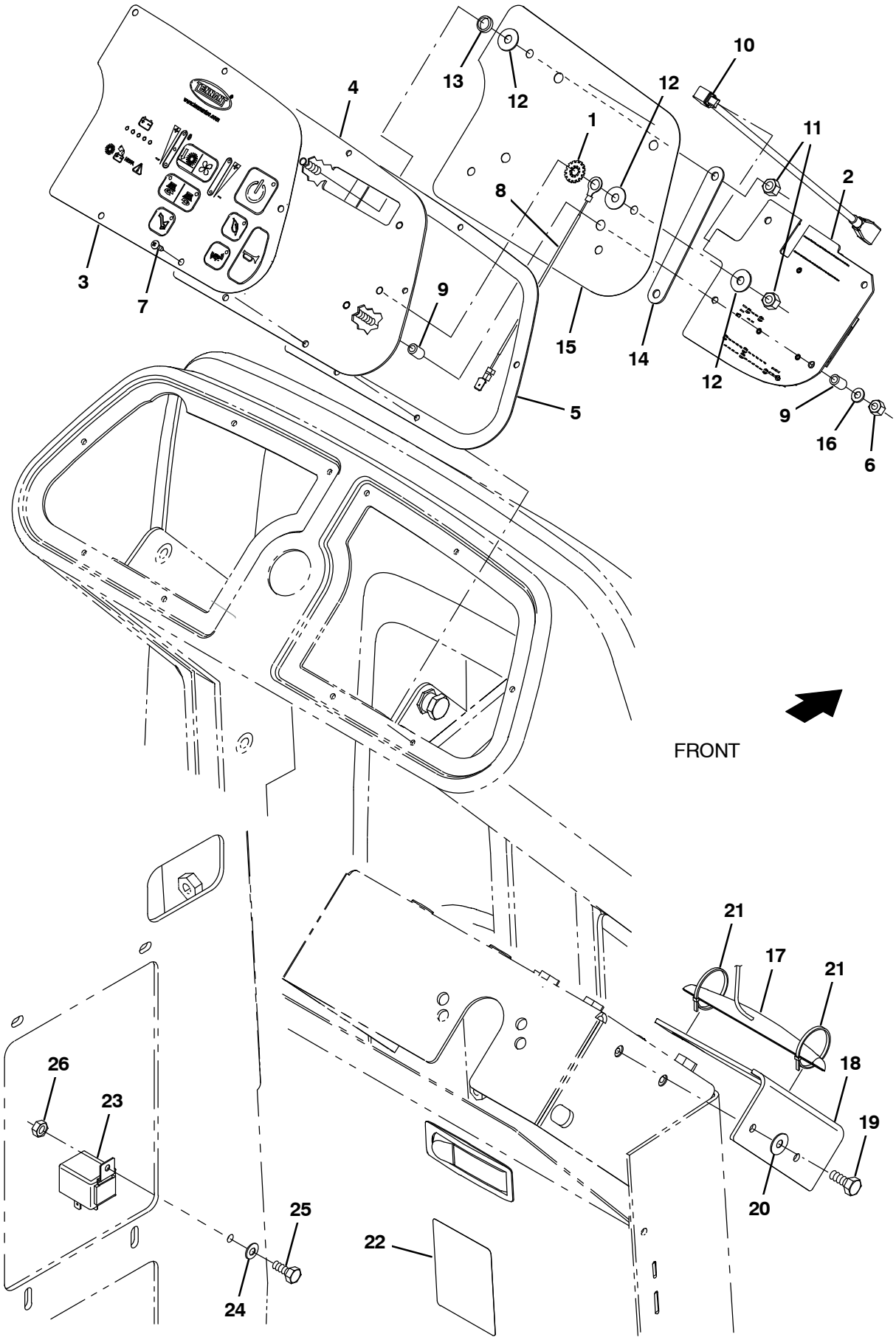

357099

Fig. 24 – Telemetry Group

	Ref.	Part No.	Serial Number	Description	Qty.
▽		9045254*	(000000–)	Circuitboard Kit, W/ Telem, Di [S16]	1
▲	1	41140*	(000000–)	Washer, Lock, Int–Ext, 0.25	1
▲	2	1252690*	(000000–)	Circuitboard Assy [Ui, Linux, Telem]	1
▲▽		9045263*	(000000–)	Membrane Kit, Ci [S16]	1
▲▲	3	1249459*	(000000–)	Panel, Overlay [Jetmore Membrane]	1
▲▲	4	1239539*	(000000–)	Plate, Console, Rh Spacer	1
▲▲	5	1244647*	(000000–)	Gasket, Dash, Rh	1
▲	6	09739*	(000000–)	Nut, Hex, Lock, M5 X 0.80, Nl, Ss	8
▲	7	222267*	(000000–)	Screw, Pan, Phl, 06 X 0.50, Fmg/Ab, Blk	5
▲	8	1074344*	(000000–)	Harness, Ele [Ring With .250m Tail]	1
▲	9	1252810*	(000000–)	Spacer, Plstc, 0.20b 0.32d 0.47l, Nyl	8
▲	10	1228665*	(000000–)	Cable [Usb, Mini–B, Male 90d, Female]	1
▲	11	08708*	(000000–)	Nut, Hex, Lock, M6 X 1.00, Nl	4
▲	12	01684*	(000000–)	Washer, Flat, 0.27b 0.69d .05, Ss	6
▲	13	1071856*	(000000–)	Spacer, 0.39b, 0.50d, 0.12l	3
▲	14	1254034*	(000000–)	Bracket, Retainer, Console, Rh	1
▲	15	1253226*	(000000–)	Cover, Console, Rh	1
▲	16	140037*	(000000–)	Washer, Flat, 0.22b 0.44d .03, Nyl	4
	17	1247569	(000000–)	Antenna, Telem [4g, 36”]	1
	18	1256480	(000000–)	Bracket, Antenna	1
	19	11329	(000000–)	Screw, Hex, M6 X 1.00 X 16, Nl, Ss	2
	20	01684	(000000–)	Washer, Flat, 0.27b 0.69d .05, Ss	2
	21	763115	(000000–)	Tie, Cable, 6.0l, 1.25d Max	2
	22	1252880	(000000–)	Label, Mach, Telem, Universal	1
	23	1229172	(000000–)	Relay, 36vdc, 025a, Spdt	1
	24	01683	(000000–)	Washer, Flat, 10, Ss	1
	25	24199	(000000–)	Screw, Hex, M5 X 0.80 X 16, Ss	1
	26	09739	(000000–)	Nut, Hex, Lock, M5 X 0.80, Nl, Ss	1

***** Requires Tennant *True* service or an authorized Tennant service provider.

Fig. 25 – Telemetry Wire Harness Group

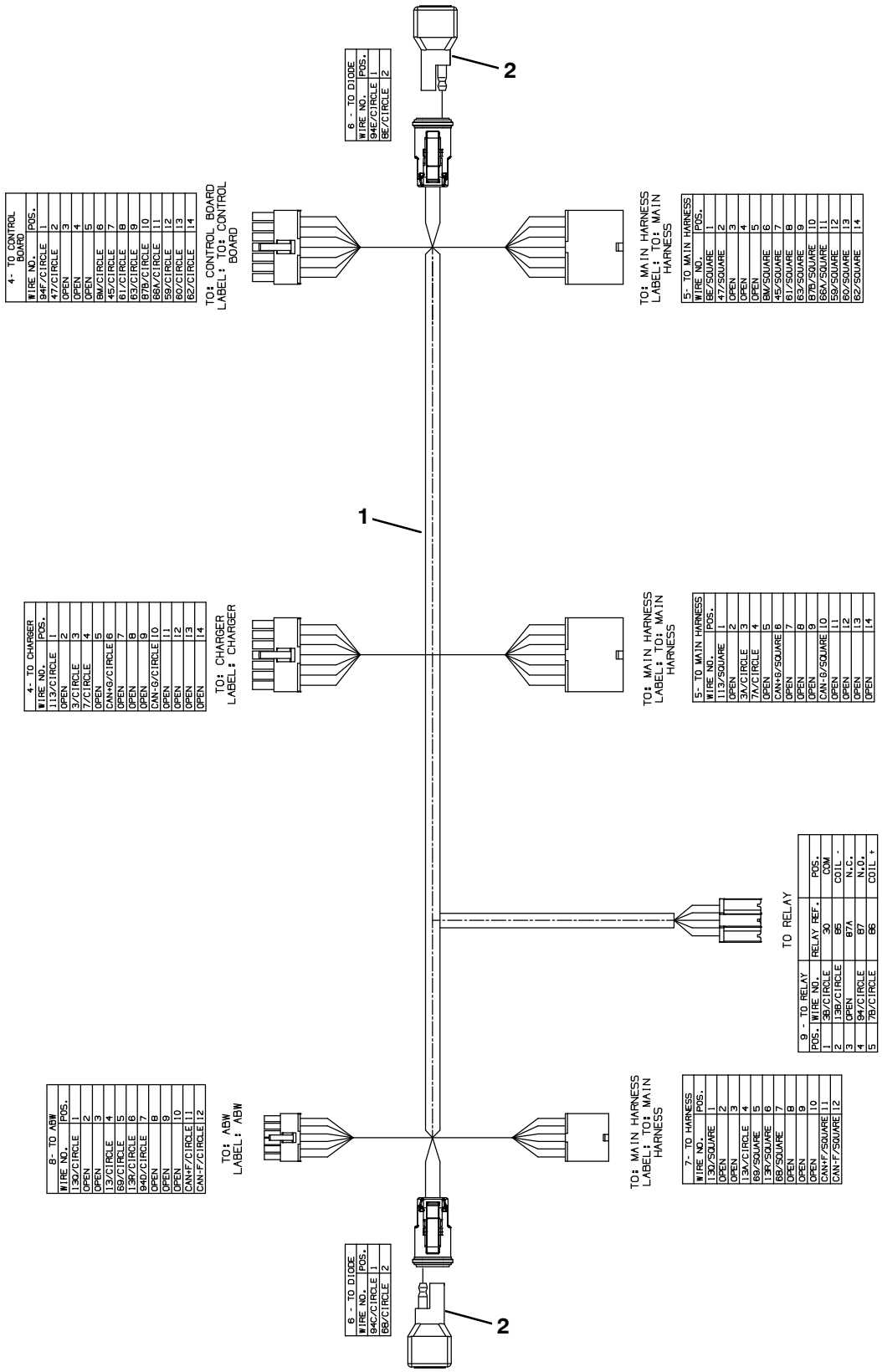

357143

Ref.	Part No.	Serial Number	Description	Qty.
1	1077178	(000000–)	Harness, Ele, Adaptor, Telem [S16]	1
2	1056982	(000000–)	Diode, Ele, Plug	2

Fig. 26 – Documentation Group (Online Only)

NA

Ref.	Part No.	Serial Number	Description	Qty.
	9045321	(000000–)	Manual, Oprtr [S16 Elec, En]	1
	9045322	(000000–)	Manual, Oprtr [S16 Elec, Es]	1
	9045323	(000000–)	Manual, Oprtr [S16 Elec, Fr]	1
	9045324	(000000–)	Manual, Oprtr [S16 Elec, Jp]	1
	9045325	(000000–)	Manual, Parts [S16 Ele, En]	1
	9045326	(000000–)	Manual, Service [S16 Ele, En]	1
	9045312	(000000–)	Instr, Use&Care, Wallchart [S16]	1

To view, print, or download the latest Parts manual, other language Operator manuals, and Use and Care Guides (wall charts) visit:

www.tennantco.com/manual

SECTION 4

Contents **Page**

Fig. 1 - Accelerator and Brake Pedal Assembly Breakdown, 1200253 4-1
Fig. 2 - Steering Control Breakdown, 1200203 . . 4-3
Fig. 3 - Drive Wheel Breakdown, 1250375 4-4

Fig. 1 – Accelerator and Brake Pedal Assembly Breakdown, 1200253

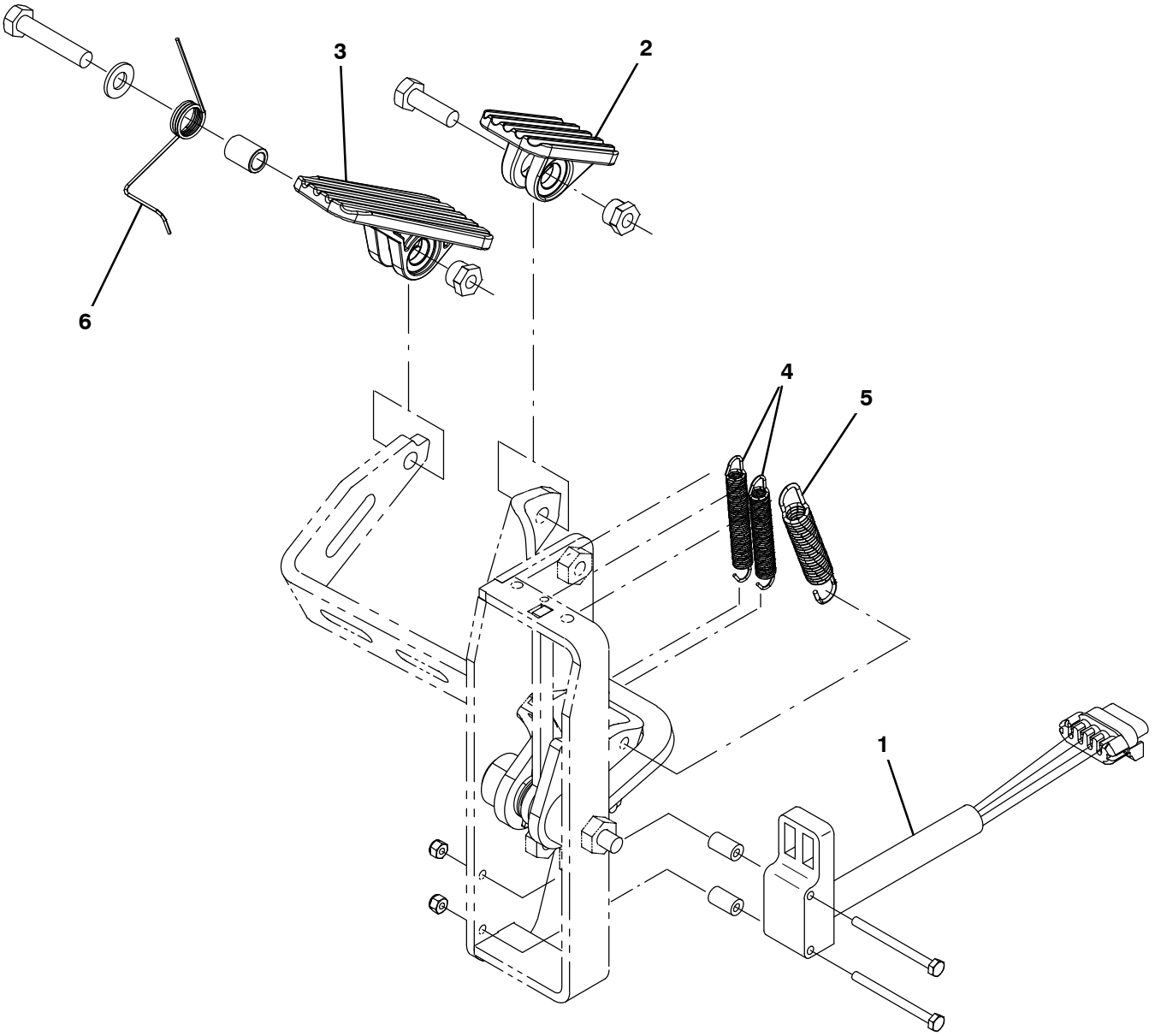

356189

	Ref.	Part No.	Serial Number	Description	Qty.
▽	.	1200253	(000000–)	Pedal Assy, Accelerator, Brake	1
▲	1	1058687	(000000–)	Sensor, Position [Hall]	1
▲	2	1014548	(000000–)	Pedal, Brake, W/ Tread	1
▲	3	1051836	(000000–)	Pedal, Propel, W/ Tread	1
▲	4	1061049	(000000–)	Spring, Extn, 0.35od 0.05wir 02.8l	2
▲	5	1031716	(000000–)	Spring, Extn, 0.50od 0.07wir 03.0l	1
▲	6	1064665	(000000–)	Spring, Tors, 0.55id .05wir 04.0coil	1

Fig. 2 – Steering Control Breakdown, 1200203

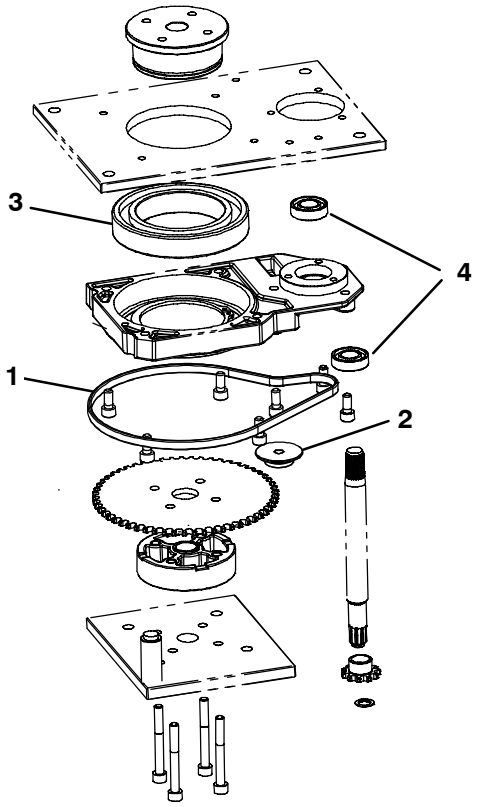

356361

	Ref.	Part No.	Serial Number	Description	Qty.
▽		1200203	(000000–)	Steer–Control Assy, Wheel Drive	1
▲▽	1	9011049	(000000–)	Chain, Steering W/Link	1
▲	2	9011051	(000000–)	Pulley, Tension	1
▲	3	372874	(000000–)	Bearing, Steering	1
▲	4	9008719	(000000–)	Bearing [6003 2RS]	2

Fig. 3 - Drive Wheel Breakdown, 1250375

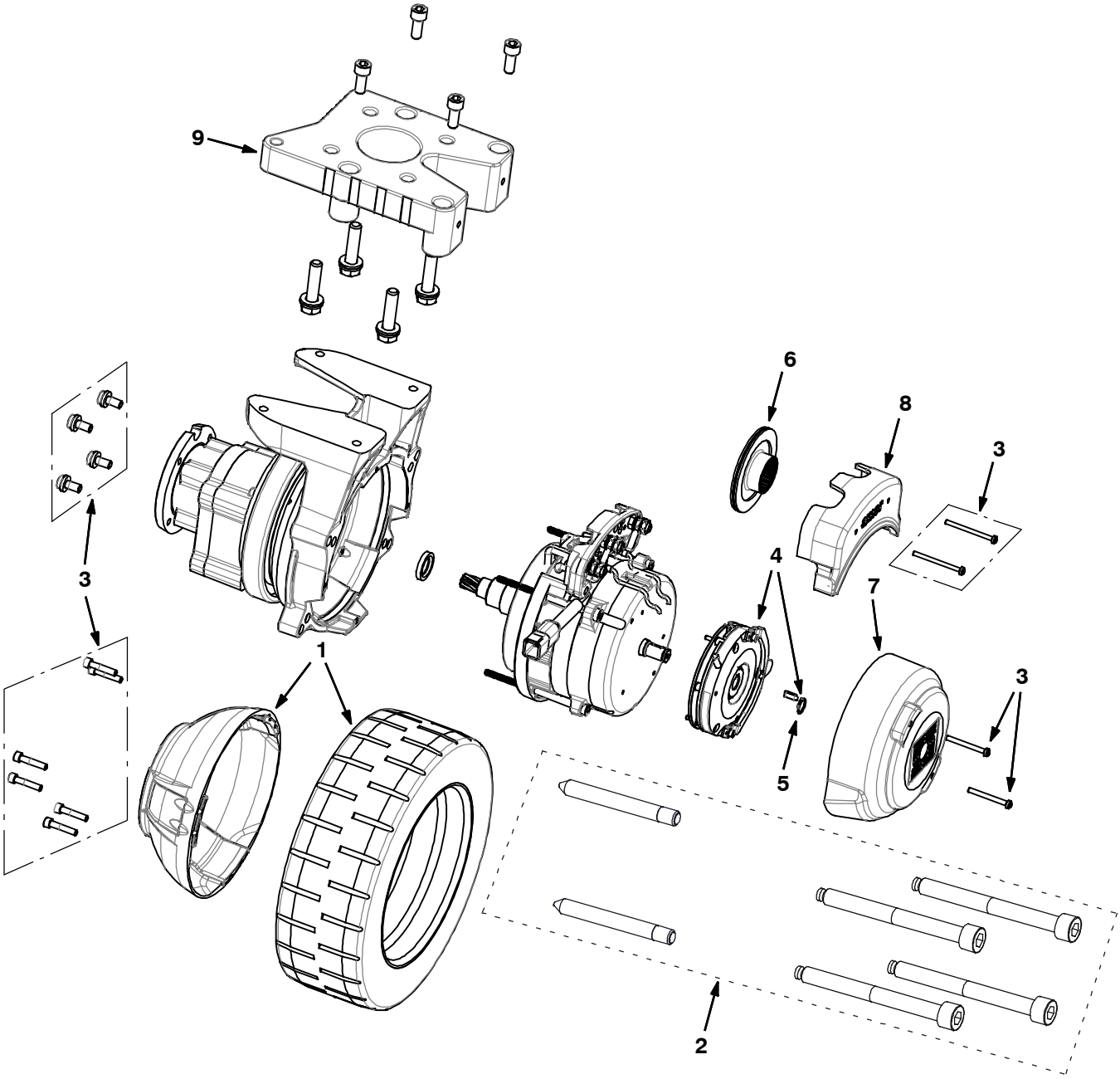

	Ref.	Part No.	Serial Number	Description	Qty.
▽		1250375	(000000-)	Wheel Assy, Drive	1
▲▽	1	9020660	(000000-)	Wheel And Hub Kit, Red [T16]	1
▲▲	2	9008544	(000000-)	Tire Kit, Puller	1
▲▲	3	9020658	(000000-)	Screw Kit	1
▲▽	4	9020688	(000000-)	Brake Kit, Complt [T12/T16]	1
▲▲	5	9008556	(000000-)	Ring, Retaining F/1055257	1
▲	6	9020689	(000000-)	Brake Kit, Rotor [T12/T16]	1
▲	7	9008549	(000000-)	Cover, Motor, Drive	1
▲	8	9008550	(000000-)	Cover, Box, Connector	1
▲	9	9008552	(000000-)	Spacer, Alm	1

SECTION 5

CONTENTS **PAGE**

PART NUMBER TO PAGE NUMBER CROSS REFERENCE LIST 5-2
PART DESCRIPTION TO PAGE NUMBER CROSS REFERENCE LIST 5-6

PART NUMBER TO PAGE NUMBER CROSS REFERENCE LIST

Part Number	Page Number
00911	2-21
00912	2-11
01493	3-8
01683	2-49, 3-47
01683*	3-29, 3-31, 3-33
01684	2-5, 2-17, 2-21, 2-27, 2-29, 2-31, 2-35, 2-37, 2-39, 3-3, 3-13, 3-15, 3-17, 3-20, 3-35, 3-41, 3-47
01684*	2-11, 3-47
01685	2-15, 2-17, 2-23, 2-25, 2-31, 2-35, 2-45, 2-49, 3-3, 3-8, 3-11, 3-13, 3-17
01686	2-23, 2-45
01754	3-39
02942	2-31, 3-3
03192	2-19, 2-39, 2-45, 3-11
03193	3-5
06549	2-23, 2-31, 3-3
06920	3-25
06921	2-45
06922	2-25, 2-43, 3-37, 3-39
06923	3-5
06924	2-43
06925	2-35
06926	3-8
06927	2-37, 2-47, 3-25
06938	2-9
06942	2-5, 2-21, 2-35, 2-45
06946	2-51
06948	2-31, 3-3
06965	2-35
06968	2-43
06969	2-43
07259	2-41
07785	2-23
07786	2-51
07787	3-45
07791	2-35, 3-8, 3-20
07810	2-5
08085	2-17, 2-27
08175	2-45
08708	2-13, 2-35, 2-37, 2-39, 2-51
08708*	3-47
08709	2-5, 2-11, 2-13, 2-19, 2-23, 2-27, 3-13, 3-17, 3-41
08711	2-11, 2-43
08712	2-5, 2-13, 2-17, 2-21, 2-27, 2-29, 2-31, 3-3, 3-13, 3-17
08712*	2-11
08713	2-25, 2-27, 2-33, 2-37, 2-45, 3-8, 3-11
08716	2-13
09007	3-41
09010	2-19, 2-25, 3-8, 3-41
09023	2-27, 3-35
09026	2-13, 2-23
09028	2-41
09164	1-1, 2-21
09570	2-5, 2-11
09738	2-23
09739	2-17, 2-49, 3-9, 3-47
09739*	2-11, 3-47
09744	2-39, 3-8, 3-20
09770	2-21, 2-23, 2-41
1006416	2-53
1009356	2-41
1011735	2-11
1012878	2-13, 2-17
1013705	2-25, 2-43, 3-5
1014163	2-31, 3-3
1014328	2-21
1014548	3-2
1014563	2-41
1015220	3-8
1016314	2-49, 2-51
1016331	3-15
1016399	2-23, 3-15
1017218	2-21, 2-23, 2-27, 2-39
1017441	2-31, 3-3
1020168	3-8
1020341	2-5, 2-9, 2-13, 2-17, 2-23, 2-41, 2-49, 3-13, 3-15, 3-17, 3-23, 3-25
1021677	3-45
1024965	2-23
1025642	3-37, 3-39
1025736	2-17
1028690	2-33
1029646	2-45
1031613	2-9
1031632	3-43
1031716	3-2
1034731	2-7, 2-17, 2-33, 2-37, 2-43, 2-47, 2-49, 3-5, 3-20, 3-23, 3-25, 3-37, 3-39, 3-41
1035684	2-19
1036490	2-11
1038966	2-11
1041030	3-27
1046422	2-37
1048955	2-15, 2-17
1051052	2-15, 2-17
1051199	2-37
1051836	3-2
1052120	2-9
1052123	2-9
1052126*	3-29, 3-31, 3-33
1052726	2-9
1054100	1-1, 2-5, 3-13, 3-17
1056982	3-8, 3-48
1057554	2-11
1057780	2-5
1058679	2-11
1058687	3-2
1058694	3-23, 3-25
1059019	2-19
1060626	2-19
1061049	3-2
1063908	2-49
1064038	2-11
1064184	2-9, 2-49, 3-5, 3-21, 3-23, 3-25, 3-41
1064188	2-9, 2-49, 3-3
1064665	3-2
1066720	2-13
1066840	3-15
1067059	2-45
1067452	1-1, 3-8
1068510	2-49
1069745	2-64
1070587	1-1, 2-53
1071856*	2-11, 3-47
1072628	2-25, 2-27, 2-31, 2-33, 3-3, 3-11
1072816	2-5, 2-21
1073882	3-35
1074344	2-37, 2-39
1074344*	2-11, 3-47
1074787	2-64
1075458	3-35, 3-37, 3-39
1076416	2-64
1076417	2-64
1076418	2-64
1076419	2-64
1076420	2-64
1076421	3-20
1076422	3-8
1076486	2-51
1076488	2-51
1076495*	3-29, 3-31, 3-33
1076607	3-23, 3-25
1076643	2-51
1076666	3-21
1077054	2-64
1077067	2-15, 2-17
1077071	2-15, 2-17
1077073	2-15, 2-17
1077178	3-48
10912	3-8
11329	2-35, 2-37, 3-20, 3-47
11398	2-31, 3-3
11635	2-35, 2-37
1200149	3-8
1200203	2-19, 3-3
1200210	2-13
1200253	2-9, 3-2
1200827	2-13
1200828	2-13
1200999	2-17
1201103	2-13

Part Number	Page Number
1201212	2-9
1201247	3-11
1201253	2-11
1201428	2-17
1201864	2-9
1201894	2-15
1202156	2-13
1202600	2-11
1202860	2-47
1202868	2-9, 3-35
1202870	3-25
1202892	3-25
1202957	2-13, 2-17
1203946	2-17
1203958	2-17
1204077	2-75
1204639	2-21
1204881	2-21
1205345	2-49
1205551	2-35, 3-8, 3-20
1205753	2-11
1205764	2-17
1205799	3-23, 3-25
1205799*	3-29, 3-31, 3-33
1206722	2-51
1206774	3-8
1208748	2-7
1210399	2-47
1210711	2-5
1210807	2-5, 2-25, 2-31, 2-35, 2-43, 2-47, 2-49, 2-53, 3-3, 3-23, 3-25, 3-35, 3-41
1213677	2-29, 2-31, 3-3
1215180	2-37, 3-20
1215716	2-25, 2-43, 3-5
1216647	2-31, 3-3
1217080	2-41
1218104	2-9
1218569	2-9
1222018	2-35
1223084	1-1, 2-21
1223100	2-23
1223393	2-11
1224988	3-41
1225549	2-3, 2-31, 3-3
1225659	2-23
1225660	2-23
1227096	2-39
1227206	2-25
12273	2-39
1227460	2-31, 3-3
12277	2-5, 2-21, 2-27, 2-29, 3-13, 3-15, 3-17, 3-35
1228665*	2-11, 3-47
1229172	2-49, 3-8, 3-47
1229475	3-35
1229621	3-35
1231018	3-41
12312	3-9
1231215	3-29, 3-31, 3-33
1231338	3-41
12317	2-23
1233633	3-41
1233940	2-53
1234826	3-37
1235128	2-37
1235145	2-37
1235763	3-41
1235955	2-5
1235956	2-5
1236295	3-42
1236479	2-43
1236500	2-41
1236501	2-41
1236686	2-41
1236687	2-41
1236758	2-41
1236827	2-23
1236830	2-21
1236847	2-23
1236882	2-43, 3-35
1236950	2-33
1237171	2-33
1237208	2-31, 3-3
1237856	2-43
1237865	2-21
1237883	2-41
1238116	1-1, 2-37, 3-20
1238155	2-35
1238296	2-21
1238366	2-31, 3-3
1238399	2-27
1238415	2-45
1238420	2-43
1238454	2-27
1238477	2-21
1238485	2-5
1238507	2-37
1238583	2-45
1238648	2-33
1238839	2-41
1238844	2-41
1238921	2-35, 3-20
1238976	2-43
1239051	2-3
1239052	2-3
1239057	2-39
1239136	2-33
1239262	2-5
1239265	2-19
1239270	2-5
1239279	3-41
1239388	3-11
1239390	3-11
1239452	2-47
1239470	3-41
1239488	2-45
1239539*	2-11, 3-47
1239687	2-47
1239703	2-39
1239716	3-37, 3-39
1239938	3-13, 3-17
1240032	1-1, 2-29
1240228*	3-29, 3-31, 3-33
1240255	2-3
1240413	3-15
1240417	1-1, 3-15
1240505	3-17
1240509	3-17
1240563	3-17
1240661	3-8
1240687	3-21
1240796	1-1, 3-20
1240955	2-37
1240956	3-20
1240961	3-8
1241180	2-43
1241485	2-19
1241947	2-37
1242046	3-5
1242048	3-5
1242063	2-45
1242075	2-33
1242206	2-13
1242463	2-49
1242563	2-33
1242643	2-53, 3-27, 3-29, 3-31, 3-33
1242861	3-39
1243199	2-23
1243754	2-53, 3-27
1243989	2-45
1243991	2-45
1244110	2-45
1244419	2-35, 3-8
1244647*	2-11, 3-47
1244929	2-33
1244951	2-29
1244952	1-1, 2-29
1245009	2-5
1245060	2-33
1245089	2-29
1245127	2-39
1245243	2-29
1245244	2-29
1245246	1-1, 2-29
1245247	1-1, 2-29
1245421	2-7
1245767	2-21
1245866	2-35, 3-8, 3-20
1245910	2-31
1245963	2-23
1246078	3-45
1246136	2-13
1246162	2-35
1246200	2-43
1246330	3-3
1246394	3-45
1246397	3-45
1246536	3-41
1246570	3-5
1246587	3-43

Part Number	Page Number
1246761	3-20
1246828	2-43
1246891	3-45
1246931	1-1, 2-21
1246932	2-21
1247076	2-39
1247096	2-39
1247402	2-33
1247432	3-8
1247443	2-11
1247470	2-33
1247551	3-15
1247569	3-47
1247760	1-1, 3-13, 3-17
1247763*	3-29, 3-31, 3-33
1247766	2-43
1247892	2-29
1248082	1-1, 3-17
1248163	2-25
1248178	3-41, 3-42
1248190	3-13, 3-17
1248191	3-13, 3-17
1248212	2-35
1248217	3-13, 3-17
1248220	3-13, 3-17
1248278	2-31, 3-3
1248310	3-5
1248334	3-5
1248392	3-25
1248410	2-5
1248442	2-17
1248488	2-25
1248505*	2-11
1248585	3-20
1248652	2-41
1248685	3-13, 3-17
1248708	2-35
1248826	3-15
1248827	3-15
1248841	2-53
1248923	2-23
1248941	2-7
1249068	2-21
1249104*	3-29, 3-31, 3-33
1249184	3-13
1249320	1-1, 3-13
1249321	3-13
1249322	3-13
1249459*	2-11, 3-47
1249550	2-35
1249621	1-1, 3-43
1249622	1-1, 3-43
1249631	2-39
1249633	2-39
1249676	3-13
1249756	3-13
1249821	2-35
1249854	2-11
1249927	3-8
1250310	3-5
1250313	2-43
1250375	2-19
1250418	3-9
1250579	2-41
1250601	2-41
1250678	2-31, 3-3
1251107	2-31, 3-3
1251299	2-5
1251303	2-49
1251316	2-13
1251331	2-31, 3-3
1251334	3-23, 3-25
1251372	2-5
1251698	2-49
1251741	2-13
1251855	2-27
1251867	3-5
1251919	2-13
1251979	2-13
1251985	2-31
1251987	2-31
1251994	2-31
1251997	2-31
1252109	3-3
1252110	3-3
1252134	3-3
1252138	2-27
1252139	2-27
1252213	1-1
1252221	2-19
1252222	2-19
1252294	3-23
1252317	2-31, 3-3
1252353	2-31, 3-3
1252359	3-3
1252361	2-41
1252419	2-27
1252424	2-27
1252456	2-29
1252459	2-29
1252460	1-1, 2-29
1252558	2-29
1252690*	3-47
1252768	2-75
1252769	2-75
1252772	2-75
1252773	2-75
1252810*	2-11, 3-47
1252818	2-53, 3-27, 3-29, 3-31, 3-33
1252842	2-39
1252880	3-47
1252923	2-27
1253016	3-20
1253149	2-11
1253176	3-21
1253226*	2-11, 3-47
1253250	3-42
1253493	2-17
1253773	2-33
1253870	2-33
1253880	2-23
1253908	2-27
1254034*	2-11, 3-47
1254155	2-3
1254294	3-23, 3-25
1254389	3-29, 3-31, 3-33
1254664	2-37, 3-20
1255026	2-39
1255297	1-1, 3-43
1255515	2-45
1255523	2-37
1255524	2-37
1255527	2-45
1255725	2-27
1255809	2-3
1255834	2-41
1255839	2-23
1255971	2-5, 2-39
1256047	2-35
1256080	2-35
1256091	2-37
1256092	3-20
1256189	2-27
1256190	2-27
1256309	2-19
1256480	3-47
1256494	2-41
1256529	2-31
1256531	3-3
1260773	2-17
130155	3-35, 3-37, 3-39
130773	2-9, 3-42
140037*	3-47
140127	2-31, 3-3
140139	2-25
140825	2-11
15675	2-9
16931	2-11, 2-35
17284	2-43
19065	2-17, 2-37, 3-8, 3-9
19066	2-9, 2-13, 2-31, 2-39, 3-3
19676	2-9, 2-33
200101017	2-31, 3-3
20802	2-13
20951	2-53
21168	2-5
222267	3-25
222267*	2-11, 3-47
222280	3-27
222290	2-64
222473	3-27, 3-29, 3-31, 3-33
223065	2-11
223080	3-8
223356	2-53, 3-27
223361	2-53
223470	2-23
22892	2-51, 2-53
22892*	3-29, 3-31, 3-33
23683	2-25
24199	2-17, 2-49, 3-47
24899	2-19

Part Number	Page Number
25312	3-9
25735	2-41
25737	3-5
26428	2-11
29570	2-17, 3-8
32483	2-45, 2-51, 3-8
32486	2-25, 2-33, 2-43
32490	2-35
32491	2-9, 2-11, 2-13, 2-19, 2-33, 2-35, 2-37, 3-8, 3-20
32492	2-5, 2-9, 2-13, 2-19, 2-29, 2-33, 2-39, 2-41, 2-45, 3-5, 3-11
32493	2-11, 2-43
32520	2-13, 2-17
32548	2-27
32982	2-51
32983	2-13
32984	2-19, 2-51, 3-35, 3-37, 3-39
33807	2-5
33944	2-51
35836	2-23
360488	2-25
360973	2-45
361076	2-11
361144	1-1, 2-11
36191	2-27
364587	2-43, 2-45
36556	2-23
367452	2-25
367679	2-37
369409	2-53
36996	2-35
370181	2-5, 2-9
372874	3-3
377084	2-11, 3-23, 3-25
377537	1-1
377540	1-1
381962	2-13
382726	2-13
383724	3-5
383725	2-49, 3-20
383727	2-49
383940	2-45
384306	2-43
384419	2-35
386063	2-29
386868	2-49
386962	2-41
39005	3-8
39019	2-49
391434	3-8
39277	2-5, 2-11
39283	2-13, 2-19, 2-29
39284	2-19, 2-33
39349	2-27, 2-51, 3-35, 3-37, 3-39, 3-41
39658	3-37, 3-39
398501	2-11
398806	2-5, 2-7, 2-9, 3-8, 3-15
40607	2-35, 3-20
40758	2-5
41140	2-37, 2-39, 2-47, 3-20, 3-35, 3-37, 3-39
41140*	2-11, 3-47
41141	2-5, 2-37
41178	2-13
41185	2-21
41345	2-19
41346	2-43
41358	2-39
41430	2-19, 2-35, 3-11
41437	2-15, 2-17
41619	2-25, 2-31, 3-3
42120–1	2-41
44851	2-31, 3-3
44906	2-5, 2-25, 2-31, 2-49, 3-3
46390	2-21, 2-23
49177	2-15, 2-17
50304	2-27, 2-33
51225–1	2-31, 3-3
51562	2-33
57598	2-5, 2-25, 3-13, 3-17
579211	3-37, 3-39
58359	2-41
58366	2-19
59009	3-8
59542	2-41
59658	2-33
600372	2-25, 2-43, 3-5
600437	3-37, 3-39
601359	3-37, 3-39
607461	2-49
630375	2-53, 3-27, 3-33
630446	2-13
64173	2-23
68872	2-53, 3-27
68873	2-53, 3-27
71579	2-5
72763	3-5
73411	2-23
74409	2-9
762425	2-45
762428	2-45
763114	3-35
763115	3-47
76888	2-5
76955	2-15, 2-17
80299	3-5
80395	2-23, 3-35
80491	2-35
80921	2-17
80950	2-27, 3-8
81581	2-31, 3-3
81818	2-23
81855	2-49
82226	2-11, 2-45
82733	2-37
82833	2-64
83285	3-5, 3-8
83289	3-5
86866	2-41
86952	2-33
87308	2-51
87318	2-51
87435	2-53, 3-27
89710	2-23, 2-27
9008182	3-25
9008719	3-3
9009632	2-13
9009834	2-15
9010928	2-9
9011049	3-3
9011051	3-3
9011057	2-13
9011058	2-13
9011872	2-19
9016770*	3-41
9019369	3-29
9019370	3-31
9019371	3-33
9042253	3-37
9045053	3-11
9045064	3-41
9045066	2-7
9045070	3-9
9045074	3-42
9045077	2-7
9045082	2-5
9045084	2-5
9045085	2-5
9045087	2-5
9045088	2-49
9045090	2-49
9045092	2-9
9045094	2-9
9045096	2-7
9045097	2-7
9045103	2-21
9045104	2-23
9045109	1-1, 2-21
9045124	2-27
9045125	2-27
9045127	2-29
9045128	2-27
9045131	2-27
9045133	3-15
9045141	2-23, 2-27
9045151	2-43
9045152	2-41
9045153	2-43
9045154	2-43
9045167	3-45
9045170	2-41
9045171	2-41
9045172	2-41
9045173	2-45
9045174	2-33
9045175	3-5
9045178	3-43

Part Number	Page Number
9045180	2-43
9045185	2-33
9045188	2-41
9045190	2-39
9045191	2-35
9045202	2-17
9045253*	2-11
9045254*	3-47
9045263*	2-11, 3-47
9045269*	2-47
9045312	3-49
9045321	3-49
9045322	3-49
9045323	3-49
9045324	3-49
9045325	3-49
9045326	3-49

PART DESCRIPTION TO PAGE NUMBER CROSS REFERENCE LIST

A

Actuator, 36vdc, 05.0strk, 900lb, 2-41
Actuator, 36vdc, 60mm Stroke, 2-31, 3-3
Actuator, 36vdc, 7.00strk, 0600lb[Std], 2-25
Alarm, 9–48vdc, 95 Db(A) [Ec–H20], 2-9
Alarm, Backup, 12–48vdc, Adj, 3-23, 3-25
Angle, Latch, 2-17
Angle, Support, 2-13
Antenna, Telem [4g, 36”], 3-47
Arm Wldt, Drive, 2-21
Arm Wldt, Idler, 2-23
Arm Wldt, Lift, Swp, 2-23
Arm Wldt, Safety, Sppt, Seat, .38d 06.5d, 3-8
Arm Wldt, Upper, Link, Lh, 3-3
Arm Wldt, Upper, Link, Rh, 2-31
Arm, Lift, Upper, 2-43
Arm, Prop, 2-35

B

Bag, Vacuum, Paper [1pick=1pkg Of 10bag], 3-8
Bag, Vacuum, Paper [1pick=1pkg(=10pc)], 1-1
Battery Assy, Li–Ion, 36v, 12.2 Kwh, 3-29
Battery Assy, Li–Ion, 36v, 4.1 Kwh, 3-33
Battery Assy, Li–Ion, 36v, 8.2 Kwh, 3-31
Battery, Wet, 06vdc 0360ah, W/ Cart [Tr], 1-1, 2-53
Battery, Wet, 06vdc 240ah, 3-27
Bearing [6003 2RS], 3-3
Bearing, Ball, 0.79b 1.85d 0.55w, 2-21, 2-23
Bearing, Ball, 1.00b 2.05d .811w 2row, 2-41
Bearing, Ball, 1.38b 2.83d 0.67w, 2-19
Bearing, Flng, 2hole, 0.75b, 2-11
Bearing, Flng, 2hole, 0.75b [Nyl], 2-11
Bearing, Flng, 4hole, 35mmb, 2-43
Bearing, Self Align, 1.25b 2.00d, 2-41
Bearing, Spherical, 20b, 2-27
Bearing, Steering, 3-3
Belt Kit, Swp, Ci, 1-1, 2-21
Belt, Drive, 34.3l [Pj09], 1-1, 2-21
Bezel, Headlight, Lh [W/Inserts], 3-25
Bezel, Headlight, Rh [W/Inserts], 3-25
Bin, Low Dump, Ci, 3-45
Block, Pye, 0.44 X 2.0 X 12.6, Hdpe (High Dump Only), 2-5
Bolt, Carriage, M8 X 1.25 X 30, 2-19
Bolt, Shld, 08mmd X 030mm, M06 X 1.0, 2-23
Boot, Bulb, .50id 1.00id 2.50l, Red, 2-49, 2-51
Boot, Switch, 2-25, 2-43, 3-5
Boot, Terminal, Battery, 02–01ga, Blk, 2-53, 3-27
Boot, Terminal, Battery, 02–01ga, Red, 2-53, 3-27
Bracket Wldt, Brush, Pivot, Lh, 3-3
Bracket Wldt, Brush, Pivot, Rh, 2-31
Bracket Wldt, Bulkhead, 2-5
Bracket Wldt, Bumper, Skirt, 3-17
Bracket Wldt, Bumper, Skirt, Rh, 3-13, 3-17
Bracket Wldt, Latch, 2-17
Bracket Wldt, Light, 3-23, 3-25
Bracket Wldt, Mount, Abw, 3-41
Bracket Wldt, Mount, Bearing, 2-27
Bracket Wldt, Mount, Charger, 2-49
Bracket Wldt, Mount, Fltr, 3-20
Bracket Wldt, Mtg, Pivot, 2-23
Bracket Wldt, Mtg, Pivot, Lh (HIGH DUMP), 2-23
Bracket Wldt, Mtg, Pivot, Lh (LOW DUMP), 2-23
Bracket Wldt, Mtg, Switch, 2-43
Bracket Wldt, Retainer, Skirt, 3-13, 3-17
Bracket Wldt, Retainer, Skirt, Hepa, 3-15
Bracket Wldt, Seat, Spring, Mtg, 2-13
Bracket Wldt, Shakr, Mtg, 2-37
Bracket Wldt, Skirt, Front, 3-13, 3-17
Bracket Wldt, Sppt, Brg, 2-11
Bracket, Antenna, 3-47
Bracket, Arm Wldt, 2-27
Bracket, Breaker, Rear, 2-49
Bracket, Channel, Brush, Lh, 3-3
Bracket, Channel, Brush, Rh, 2-31
Bracket, Dampner, 2-23
Bracket, Door Latch Horiz, 2-5
Bracket, Ele, Cb [T12], 2-9
Bracket, Fire Extinguisher, 3-9
Bracket, Guide, Hppr, 2-33
Bracket, Hyd, 2-45
Bracket, Latch, Keeper [Southco], 2-35
Bracket, Mount, Switch, 3-37, 3-39
Bracket, Mount, Tank [Abw], 3-41
Bracket, Mtg, Brg, 2-11
Bracket, Mtg, Hsng, Lh, 2-39
Bracket, Mtg, Hsng, Rh, 2-39
Bracket, Pivot, Cover, 2-35
Bracket, Retainer, Console, Rh, 2-11, 3-47
Bracket, Retainer, Skirt, 3-13, 3-17
Bracket, Retaining, Skirt, 3-13, 3-17
Bracket, Skirt, Recirculation, 2-29
Bracket, Sppt, Hopper, Lh, 2-33
Bracket, Sppt, Hopper, Rh, 2-33
Bracket, Sppt, Seat, 2-13
Bracket, Support, Pump, 2-13
Brush Kit, Motor, Fan, 2-37, 3-8, 3-20
Brush, Disk, Sweep, 20.0d, Polypropylene, 2-3
Brush, Disk, Swp, 20.0d, Polypropylene, 2-31, 3-3
Brush, Sweep, 32.4l, 06dr, Polypropylene, Spiral, 2-3
Brush, Sweep, 32.4l, 06sr, Natural Fiber, Spiral, 2-3
Brush, Sweep, 32.4l, Spiral, Polypropylene and Wire [Bronze], 2-3
Brush, Sweep, 32.4l, Wedge, Polypropylene, Spiral, 2-3
Brush, Sweep, 32.4l, Window, Polypropylene, Spiral, 2-3
Bumper, Rbr, 1.0d 0.38th .25–20, 2-13
Bumper, Rbr, 1.5d 1.50th 0.28h, 2-31, 3-3
Bushing, Flng, 0.32b 0.50d 0.24l, Bnz, 2-27, 3-8
Bushing, Flng, 0.50b 0.56d 0.22l, Nyl, 2-23
Bushing, Flng, 0.63b 0.75d 0.38l, 2-41
Bushing, Flng, 0.75b 0.88d 0.75l, 3-5
Bushing, Flng, 10mmb 12mmd 7mml, 2-41
Bushing, Flng, 12.0b 7.0l 14.0d, Plstc, 2-23
Bushing, Flng, 16mmb 18mmd 6mml, 2-41
Bushing, Flng, 25.0mmb 28.0mmd 11.0mml, 2-43
Bushing, Flng, 8.3b 11.8d 9.7l, 2-23
Bushing, Flng, 8mmb 10mmd 7.5mml, 2-31, 3-3
Bushing, Sleeve, 0.50b 0.59d 0.25l, Oib, 2-25
Bushing, Sleeve, 0.50b 0.59d 0.38l, Stl, 2-23
Bushing, Sleeve, 0.88b 1.00d 0.75l, Bnz, 2-43, 2-45
Bushing, Sleeve, 1.25b 1.41d 0.50l, 2-43
Bushing, Snap–In, 0.25b 0.31d 0.08th Nyl, 2-17

C

Cable [Usb, Mini–B, Male 90d, Female], 2-11, 3-47
Cable Assy, 04ga .34ring /.34ring, 175a, 2-53
Cable Assy, 06ga [2 Wire, M6/M8 Ring], 2-51
Cable Assy, Battery, 02ga [T12,T16], 3-29, 3-31, 3-33
Cable, 04ga 12.0l Blk .31ring /.31ring, 2-53, 3-27
Cable, 04ga 5.5l Brown .31ring/.31ring, 2-51
Cable, Battery, 4ga, .31ring / .312ring, 2-51
Cable, Glv .09d 013.0l .38eye /.38eye, 2-9, 2-33
Cable, Lift, 0.13d 8.17l 0.50eye/0.50eye, 2-25
Cap, Battery, Black, 3-27
Cap, Hub, Wheel [For 1060626], 2-19
Cap, Tank, 2.25 [Blue,Vented W/Lanyard], 3-41
Cap, Tube, 1.0, 2-33
Cap, Wheel, Steering, 2-11
Chain, Coil, Str, 2/0, 06.9l 05 Link, 2-5
Chain, Steering W/Link, 3-3
Channel Wldt, Seat, 2-13
Channel Wldt, Steering, Pntd, 2-9

Charger 36vdc 1200w 100–240vac [On Brd] (Not Shown), 3-35
Charger Kit, Off Board [T600/T600e], 3-37
Charger, 36vdc 1200w 100–240vac[Off Brd], 3-39
Charger, 36vdc 900w 100–240vac [Off Brd], 3-37
Charger, 36vdc 900w 100–240vac [On Brd], 3-35
Circuitboard Assy [Chui, User Interface], 2-11
Circuitboard Assy [Ui, Linux, Telem], 3-47
Circuitboard Kit, Main Sweep, Ci [S16], 2-47
Circuitboard Kit, W/ Telem, Di [S16], 3-47
Circuitboard Kit, W/O Telem, Ci [S16], 2-11
Circuitbreaker, 02.5a, Resetable, 2-9, 2-49, 3-5, 3-21, 3-23, 3-25, 3-41
Circuitbreaker, 15.0a, Resetable, 2-9, 2-49, 3-3
Circuitbreaker, 25.0a, Resetable, 3-5
Circuitbreaker, 30.0a, Resetable, 2-49, 3-20
Circuitbreaker, 40.0a, Resetable, 2-49
Clamp, Cable, Stl, 0.9x1.8x0.62w, 1hole, 2-11
Clamp, Cable, Stl, 1.25d X 1.00w, 1hole, 2-19
Clamp,Cable, Stl, 0.90d X 0.62w, 1hole, 2-5
Clip, Tie, 0.25d, Plstc, 2-9, 3-35
Connector, Anderson, 175a, Gray, 2-51, 2-53, 3-29, 3-31, 3-33
Connector, Battery, 6ga 50a, Gray[2cont], 3-35, 3-37, 3-39
Contactor, 36vdc, 200a, Spst, 2-49
Controller Kit, Battery, 24vdc, Ci [Abw], 3-41
Controller, Battery, Li–Ion, 36vdc [Bms], 3-29, 3-31, 3-33
Controller, Drive [T12], 2-9
Cord, Power, 14/3, 15a, 15ft Blk [Us], 3-35
Cord, Power, 16/3, 15ft Blk [Us], 3-37, 3-39
Cover Kit, Box, Elec, Afmkt [S16 Jp], 2-49
Cover Kit, Box, Elec, Afmkt [S16], 2-49
Cover Wldt, Filterbox, 3-8
Cover Wldt, Fltr, 3-20
Cover Wldt, Louvered, 2-35
Cover, Belt, 2-21
Cover, Box, Controls, 2-47
Cover, Console, Rh, 2-11, 3-47
Cover, Filterbox, Afmkt [S16], 2-35
Cover, Side, Lh, Afmkt, Emea/Jpn [S16], 2-7
Cover, Side, Lh, Afmkt, Std [S16], 2-7
Cover, Side, Rh, Afmkt, Emea/Jpn [S16], 2-7
Cover, Side, Rh, Afmkt, Std [S16], 2-7
Cover, Thread, M5, 2-31, 3-3
Cuff, 1.75 Tube, 1.62id/Tpr 4.3l Blk, 3-5
Cuff, 1.7d Hose, 1.5id/Tpr 4.0l Blk, 3-5
Cuff, 2.3d Hose, 1.5id/2.3od 3.6l Blk, 3-5, 3-8
Cylinder, Hyd, 2.0b 24.1l 15.00strk 3000, 2-45

D

Dampener, Linear, 5.0strk, 2-13
Delivery Assy, Water, Battery, 3-41
Diode, Ele, Plug, 2-64, 3-8, 3-48
Distribution Assy, Water, Battery, 3-41, 3-42
Door Kit, Idler, Swp, Ci, 2-29
Door Wldt, Brush, 2-5
Door Wldt, Skirt, 3-15
Drive Kit, Swp, Ci, 2-21

E

Extinguisher, Fire, 2.5 Lb Dry, 3-9

F

Fan, Vacuum, 6.6d, 036vdc, 1 Stage [Bpt], 3-8
Fan, Vacuum, 8.7d, 036vdc, 1 Stage, 2-37, 3-20
Fill Kit, Battery, Manual, Ci [S16], 3-42
Filter Wldt, Screen, 3-43
Filter, Dust, Panel 4.2 X 19.2 X 26.0, 1-1, 2-37, 3-20
Filter, Foam, 3-8
Filter, Hepa, 21.16 X 7.50 X 4.25, 1-1, 3-20
Filterbox Wldt, 3-8
Fitting, Brs, Pm02/Pm02, W/ Fltr, 2-35, 3-20
Fitting, Brs, Str, Bm03/Pm02, 2-35, 3-20
Fitting, Grease, Str Pm04 .47l, 2-41
Fitting, Hyd, E90, Fm04/Om06, 2-45
Fitting, Hyd, Rst, Fm04/Of04, .047, 2-45
Fitting, Hyd, Str, Fm04/Om04, 2-45
Fitting, Plstc, E90, Bm06/Bm06, 2-53
Fitting, Plstc, E90, Bm06/Pm04, 2-53
Frame Wldt, Main [S16], 2-5
Fuse, 080a, 0.88 2.4l, 125volt,Slow–Blow, 2-51

G

Gas Spring, 35lb, 8.0strk, 2-17
Gasket, Belt, Cover, 2-21
Gasket, Dash, Rh, 2-11, 3-47
Gasket, Sensor, Thermal, 2-37
Gasket, Shaft, Steering, 2-11
Gasspring, 90lb, 3.15strk, 2-35, 3-8, 3-20
Gauge, Hourmeter, 05–277 Volt, Ac / Dc, 2-11
Grip, Handle, 3-5
Grip, Handle, .25d .60l Yel, 2-17
Grip, Handle, .25d .90l Yel, 2-13
Grommet, Pump, 3-41
Grommet, Rbr, 0.38id, F/ 1.0h, .25 Matl, 3-21
Guard Wldt, Top, Ohg, 3-11
Guard, Brush, Side, 2-31, 3-3
Guide, Cyl, 2-45

H

Handle Wldt, Latch, Seat, 2-17
Handle Wldt, Pivot, Wand, 3-5
Handle, Container, 2-13
Handle, Latch, 2-17
Handle, Tube, Wldt, 2-33
Hanger Kit, Vac Wand, Ci, 3-5
Harness, Cable, Propel Motor [T12,Cw], 2-64
Harness, Chrgr, 10ga [M8 Ring/M8 Ring], 3-35, 3-37, 3-39
Harness, Cntrl, Battery [Lithium, S16], 3-29, 3-31, 3-33
Harness, Ele [Hyd. Pump, S16], 2-64
Harness, Ele [Lights, S16], 3-23, 3-25
Harness, Ele [Ring With .250m Tail], 2-11, 2-37, 2-39, 3-47
Harness, Ele, Adaptor, Telem [S16], 3-48
Harness, Ele, Hopper [Hi–Dump, S16], 2-64
Harness, Ele, Main [S16], 2-64
Harness, Ele, Seat [T12], 2-64
Harness, Ele, Sweep, Side [S16], 2-64
Harness, Ele, Vac [Hepa,S16], 3-20
Harness, Ele, Vac [S16], 2-64
Harness, Ele, Wand [S16], 3-8
Harness, Wire, Propel Motor [S16], 2-64
Hinge Kt, Swp, Ci, 2-27
Hinge, Shaker, 2-37
Hopper Kit, Arm, Lower, Ci [S16 Jp], 2-43
Hopper Kit, Arm, Lower, Ci [S16 Na], 2-43
Hopper Kit, Arm, Upper, Lh, Ci, 2-43
Hopper Kit, Arm, Upper, Rh, Ci, 2-43
Hopper Kit, Link, Roll, Ci, 2-41
Hopper Kit, Low Dump, Ci [S16 Jp], 2-33
Hopper Kit, Low Dump, Ci [S16 Na], 2-33
Hopper Kit, Lug, Cyl, Ci, 2-45
Hopper Kit, Roll Wldt, Lh, Ci, 2-41
Hopper Kit, Roll Wldt, Rh, Ci, 2-41
Hopper Wldt, 2-41
Hopper, Removable, 3-45
Horn, 36vdc, 110dba, 2-5
Hose, Afmkt, Pvc, Clr, 0.38id, 03ft, 2-53
Hose, Flex, Vacuum, 02.0d, 024.0l, 3-5
Hose, Hyd, Med04, Of04e90/Of04str, 046.8, 2-45
Hose, Hyd, Med04, Of04e90/Of04str, 059.3, 2-45
Housing Wldt, Cntrl, 2-47
Housing, Fltr, Afmkt [S16], 2-39

I

Idler Kit, Swp, Ci, 2-23
Inductor, 12.7mmid [156 Imp At 25mhz], 3-29, 3-31, 3-33

Inductor, 18Mmid [156 Imp At 25Mhz] (Australia Only), 2-9
Inductor, 25Mmid [218 Imp At 25Mhz] (Australia Only), 2-9
Instr, Use&Care, Wallchart [S16], 3-49
Iron Gray S/G Enamel12.8oz[lcm101–00517], 1-1

K

Key, ignition, Sgl, 1-1, 2-11
Key, Sq, 0.19 X 0.19, 0.75l, 2-21
Key, Sq, 0.19 X 0.19, 1.00l, 2-11
Key, Sq, 05mm X 05mm, 25mml, 2-21
Kit, Lint Screen, Cl, 3-43
Knob, Star, 2.00d 5ear, M10 X 1.0l Stud, 2-23
Knob, Star, 2.00od 4ear M8x1.25 [Yel], 2-29, 2-31, 3-3

L

Label [Anti–Tamper], 3-29, 3-31, 3-33
Label Set, Jpn, Pyc [S16], 2-75
Label Set, Jpn, Vyl [S16], 2-75
Label Set, NA, Pyc [S16], 2-75
Label Set, NA, Vyl [S16], 2-75
Label, Automated Battery Watering, 3-41
Label, Circuitbreaker, 2-9
Label, Circuitbreaker, Rear, 2-49
Label, Detgt [Do Not Add], 3-41
Label, Hole, Cover, Taillight, 3-23
Label, Mach, Telem, Universal, 3-47
Label, Opertnl, Console, Lh [S16], 2-11
Label, Tag, Battery [Bwt Watering], 3-42
Latch, 2-5, 2-7, 2-9, 2-17, 3-8, 3-15
Latch, Door, Yel, 2-35
Latch, Push, 1.5 X 1.8 [A3–50], 2-49
Latch, Swing, Lh, 2-33
Latch, Swing, Rh, 2-33
Lift Wldt, Lower, Link, Lh, 3-3
Lift Wldt, Lower, Link, Rh, 2-31
Light Assy, Pre–Sweep, Afmkt, 3-25
Light, Spot, Blue, Led, 3-21
Light, Strobe, Amb, Led, 3-23, 3-25
Link Wldt, Oprtr Station, 2-13
Link, Oprtr Station, 2-13

M

Manual, Oprtr [S16 Elec, En], 3-49
Manual, Oprtr [S16 Elec, Es], 3-49
Manual, Oprtr [S16 Elec, Fr], 3-49
Manual, Oprtr [S16 Elec, Jp], 3-49
Manual, Parts [S16 Ele, En], 3-49
Manual, Service [S16 Ele, En], 3-49
Membrane Kit, Ci [S16], 2-11, 3-47
Molding, Afmkt, Trim, Pvc, .08 .11, 01ft, 3-8
Motor Wldt, Mtg, Brush, Lh, 3-3
Motor Wldt, Mtg, Brush, Rh, 2-31
Motor, Ele, 36vdc 0070rpm 0.16hp Gear, 2-31, 3-3
Motor, Ele, 36vdc 1900rpm 1.0hp, 2-21
Motor, Ele, 36vdc, Shakr, Ul, 2-37
Mount Wldt, Actuator, Swp, 2-25

N

Nameplate, Tennant, Domed, 2-75
Nut, Hex, Flexlock, .31–18, 2-53, 3-27
Nut, Hex, Flng, M8 X 1.25, 2-35, 3-8, 3-20
Nut, Hex, Jam, .25–20, 2-13, 2-17
Nut, Hex, Jam, M8 X 1.25, 2-31, 3-3
Nut, Hex, Lock, .31–18, Nl, 2-13
Nut, Hex, Lock, .31–18, Nl, Ss, 2-15, 2-17
Nut, Hex, Lock, M10 X 1.5, Nl, 2-19, 2-35, 3-11
Nut, Hex, Lock, M12 X 1.75, Nl, 2-11, 2-43
Nut, Hex, Lock, M3 X 0.50, Nl, Ss, 3-37, 3-39
Nut, Hex, Lock, M5 X 0.80, Nl, Ss, 2-11, 2-17, 2-49, 3-9, 3-47
Nut, Hex, Lock, M6 X 1.00, Nl, 2-13, 2-35, 2-37, 2-39, 2-51, 3-47
Nut, Hex, Lock, M6 X 1.00, Nl, Ss, 2-5, 2-11, 2-13, 2-17, 2-21, 2-27, 2-29, 2-31, 3-3, 3-13, 3-17
Nut, Hex, Lock, M8 X 1.25, Nl, 2-5, 2-11, 2-13, 2-19, 2-23, 2-27, 3-13, 3-17, 3-41
Nut, Hex, Lock, M8 X 1.25, Nl, Ss, 2-25, 2-27, 2-33, 2-37, 2-45, 3-8, 3-11
Nut, Hex, M5 X 0.80 X 16, 8.8, 2-23, 2-31, 3-3
Nut, Hex, Std, M10 X 1.50, Ss, 3-45
Nut, Hex, Std, M3 X 0.50, 8, 3-39
Nut, Hex, Std, M6 X 1.00, Ss, 2-23
Nut, Hex, Std, M8 X 1.25, Ss, 2-51
Nut, Push, Bolt Retention, Stl,5/16 Thrd, 2-15, 2-17

O

Ohg Kit, Ci [S16], 3-11

P

Pad Set, Wear, 2-5, 2-39
Pad, Grip, 2-27
Paint, Airdry, Blk, 12oz, 1-1
Panel Wldt, Console, Lh, 2-11
Panel, Access, Front, Afmkt [S16 Jp], 2-9
Panel, Access, Front, Afmkt [S16], 2-9
Panel, Overlay [Jetmore Membrane], 2-11, 3-47
Part Kit, Station, Oprtn, Plstc [2Pc=1Kit], 2-13
Parts Kit, Extinguisher, Fire, Ci, 3-9
Parts Kit, Front Skirt, Linkage (HIGH DUMP), 2-23, 2-27
Parts Kit, Front Skirt, Linkage (LOW DUMP), 2-23, 2-27
Parts Kit, Hppr, Replmt, 2-41
Pedal Assy, Accelerator, Brake, 3-2
Pedal Assy, Accelerator, Brake (See Breakdowns), 2-9
Pedal Kit, Swp, Ci, 2-27
Pedal Wldt, Skirt, 2-27
Pedal, Brake, W/ Tread, 3-2
Pedal, Propel, W/ Tread, 3-2
Pin, 0.87d 02.1l ,Stl, 2-45
Pin, Clevis, 0.19d X 1.00l, 2-27
Pin, Clevis, 0.31d X 1.75l, 2-31, 3-3
Pin, Clevis, 0.37d X 0.75l, 2-49
Pin, Clevis, 0.37d X 3.25l, 2-5, 2-25, 3-13, 3-17
Pin, Clevis, 0.50d X 3.00l, 2-25
Pin, Clevis, 0.50d X 6.00l, 2-31, 3-3
Pin, Clevis, 0.88d X 3.00l, 2-45
Pin, Clevis, 10mmd X 040mml, 2-41
Pin, Clevis, 10mmd X 60mml [304ss], 2-41
Pin, Clevis, 8mmd X 100mml [304ss], 2-31, 3-3
Pin, Cotter, .094 X 0.75, 3-8
Pin, Cotter, .125 X 1.25, 2-45
Pin, Cotter, Hair, 0.31d .058 Wir, 2-17, 2-27
Pin, Cotter, Hair, 0.38d .054 Wir, 2-31, 3-3
Pin, Cotter, Hair, 0.38d .072 Wir, 2-41
Pin, Cotter, Hair, 0.38d .093 Wir, 2-5, 2-25, 2-31, 2-49, 3-3
Pin, Hair, Cotter, 0.62d .120 Wir, 2-31, 3-3
Pin, Hitch, .375d X 1.80l, Ss, 2-33
Pin, Roll, .250d X 2.00l, .250/.256, 2-31, 3-3
Pivot Wldt, 2-41
Pivot Wldt, Lh, 2-41
Plate Wldt, Adjmt, 2-35
Plate Wldt, Mtg, Fan (High Dump), 2-37
Plate Wldt, Mtg, Fan (Low Dump), 2-37
Plate Wldt, Mtg, Fan [Hepa] (High Dump), 3-20
Plate Wldt, Mtg, Fan [Hepa] (Low Dump), 3-20
Plate Wldt, Mtg, Hppr, Lh, 2-41
Plate Wldt, Mtg, Hppr, Rh, 2-41
Plate Wldt, Mtg, Skirt, Lh, 3-13
Plate Wldt, Mtg, Sppt, Seat, 2-13
Plate Wldt, Mtg, W/Label, Aftmkt, JP, 2-13
Plate Wldt, Mtg, W/Label, Aftmkt, Na, 2-13
Plate Wldt, Mtg, Wand, 3-5
Plate Wldt, Permafilter, 2-39
Plate Wldt, Retainer, Skirt, 2-29
Plate Wldt, Shakr, Fltr, 2-37
Plate Wldt, Skirt, Lh, 2-29
Plate Wldt, Skirt, Rh, 2-29
Plate Wldt, Spacer, Bottom, 2-19
Plate Wldt, Spring, Latch, Lh, 2-33
Plate Wldt, Spring, Latch, Rh, 2-33
Plate Wldt, Tower, Adj, 2-43
Plate Wldt, Wheel, Axle, 2-19
Plate, Adapter, Brush, 2-31, 3-3
Plate, Adjust, 2-23
Plate, Backing, Switch, 3-37, 3-39
Plate, Brg, Adapter, 2-27

Plate, Console, Rh Spacer, 2-11, 3-47
Plate, Coupler, 2-41
Plate, Cover, 2-35, 3-29, 3-31, 3-33
Plate, Cover, Front Rh, 2-7
Plate, Cover, Side, 2-7
Plate, Cyl, Mount, 2-45
Plate, Door, Brush, Skirt, 3-15
Plate, Follower, 2-41
Plate, Handle, 3-45
Plate, Harness, 2-19
Plate, Hppr, Pivot, 2-41
Plate, Keeper, 2-45
Plate, Latch [T17], 2-7
Plate, Link (HIGH DUMP), 2-27
Plate, Link (LOW DUMP), 2-27
Plate, Mtg, Block, 2-35
Plate, Raceway, 2-5
Plate, Retainer, 2-43, 3-35
Plate, Retainer, Skirt, Hepa, 3-13, 3-17
Plate, Retaining, Skirt, 2-29
Plate, Safety, Cyl, 2-45
Plate, Skirt, 3-13
Plate, Spacer, Top, 2-19
Plate, Stop, Door, Brush, 2-5
Plate, Thread, Switch, M3 Nut, 96hr Pl, 2-25, 2-43, 3-5
Plate, Washer, 2-39
Plug, Drive, Brush, 2-21
Plug, Drive, Brush, Spl, 2-23
Plug, Hole, Rnd, 0.25h 0.8l, Brb, Nyl, 2-5
Plug, Hole, Rnd, 0.44h .03–.12, Blk Nyl, 2-5
Plug, Hole, Rnd, 1.00h .03–.12, Blk Nyl, 3-8
Plug, Hole, Rnd, 1.25h .03–.12, Blk Nyl, 2-5
Plug, Hole, Rt, Rocker Switch, .87 X 1.7, 2-11
Pulley, Tension, 3-3
Pump, Hand, Battery, 3-42
Pump, Hyd, 36vdc, Isolated, 2-45
Pump, In–Tank, 13.5vdc 3.5lpm, 3-41

R

Rail, Sl, T, 2-27
Relay, 36vdc, 025a, Spdt, 2-49, 3-8, 3-47
Retainer Wldt, Bracket, 2-27
Retainer Wldt, Skirt, Rh, 2-29
Retainer, Brg, 2-23
Retainer, Ring, 2-41
Retainer, Skirt, Lh, 2-29
Retainer, Skirt, Rh, 2-29
Ring, Retaining, Ext, 0.75D, Hd, 2-11
Ring, Retaining, Ext, 1.00d, 2-41
Ring, Retaining, Ext, 1.375od, 2-19
Ring, Retaining, Int, 2.00d, 2-41
Rivet, Blind, .154d X 0.55 X .38d, Ss, 3-45
Rivet, Blind, .188d X 0.45 X .62d, Alm, 2-27
Rod, Thrd, Full, M10 X 1.5 12.2l, 3-45
Route, Harness, Lt, Blu, Rear [S16], 3-21

S

Screw, Btn, M5 X 0.8 X 16, 8.8, Nl, Torx, 3-23, 3-25, 3-29, 3-31, 3-33
Screw, Btn, M8 X 1.25 X 16, Ss, 2-43
Screw, Btn, M8 X 1.25 X 25, Ss, 2-23
Screw, Flt, Soc, M8 X 1.25 X 25, 10.9 (High Dump Only), 2-5
Screw, Hex, .31–18 X 1.00, G5, 2-15, 2-17
Screw, Hex, M10 X 1.5 X 30, 9.8, Sems, 2-23
Screw, Hex, M10 X 1.50 X 25, Nl, Ss, 2-21, 2-23, 2-41
Screw, Hex, M10 X 1.50 X 25, Ss, 2-41
Screw, Hex, M10 X 1.50 X 30, 8.8, 2-19, 2-39, 2-45, 3-11
Screw, Hex, M10 X 1.50 X 30, 8.8 (High Dump Only), 2-19
Screw, Hex, M10 X 1.50 X 35, 8.8, 2-33
Screw, Hex, M10 X 1.50 X 35, 8.8 (Low Dump Only), 2-19
Screw, Hex, M10 X 1.50 X 80, 8.8, 2-35
Screw, Hex, M10 X 1.50 X 90, 8.8, 3-5
Screw, Hex, M10x 1.50 x 25, 10.5, 2-9
Screw, Hex, M10x1.50x25, 10.5, 2-5
Screw, Hex, M10x1.50x25, 8.8, 2-13, 2-19, 2-29
Screw, Hex, M12 X 1.75 X 25, 8.8, 2-19
Screw, Hex, M12 X 1.75 X 30, 8.8, 2-43
Screw, Hex, M12 X 1.75 X 35, 8.8, 2-43
Screw, Hex, M12 X 1.75 X 40, 8.8, 2-43
Screw, Hex, M5 X 0.80 X 12, 8.8, 3-9
Screw, Hex, M5 X 0.80 X 12, Ss, 2-23
Screw, Hex, M5 X 0.80 X 16, Ss, 2-17, 2-49, 3-47
Screw, Hex, M6 X 1.00 X 12, 8.8, 2-51
Screw, Hex, M6 X 1.00 X 12, Nl, Ss, 2-35, 2-37
Screw, Hex, M6 X 1.00 X 12, Ss, 2-39, 3-8, 3-20
Screw, Hex, M6 X 1.00 X 16, 8.8, 2-5, 2-21, 2-35, 2-45
Screw, Hex, M6 X 1.00 X 16, Nl, Ss, 2-35, 2-37, 3-20, 3-47
Screw, Hex, M6 X 1.00 X 16, Sems, Ss, 2-7, 2-33, 2-37, 2-43, 2-47, 2-49, 3-5, 3-20, 3-23, 3-25, 3-37, 3-39, 3-41
Screw, Hex, M6 X 1.00 X 16, Ss, Sems, 2-17
Screw, Hex, M6 X 1.00 X 20, Nl, Ss, 2-5, 2-21, 2-27, 2-29, 3-13, 3-15, 3-17, 3-35
Screw, Hex, M6 X 1.00 X 20, Ss, 2-13
Screw, Hex, M6 X 1.00 X 25, Ss, 3-41
Screw, Hex, M6 X 1.00 X 35, 8.8, 2-51
Screw, Hex, M6 X 1.00 X 45, 8.8, 2-31, 3-3
Screw, Hex, M6 X 1.00 X 80, Ss, 3-8
Screw, Hex, M8 X 1.25 X 12, Ss, 2-49
Screw, Hex, M8 X 1.25 X 16, Ss, 2-9
Screw, Hex, M8 X 1.25 X 20, 8.8, 2-11, 2-35
Screw, Hex, M8 X 1.25 X 20, Nl, Ss, 2-39
Screw, Hex, M8 X 1.25 X 20, Ss, Sems, 2-5, 2-9, 2-13, 2-17, 2-23, 2-41, 2-49, 3-13, 3-15, 3-17, 3-23, 3-25
Screw, Hex, M8 X 1.25 X 25, 8.8, 2-5, 2-11
Screw, Hex, M8 X 1.25 X 25, Ss, 2-19, 2-25, 3-8, 3-41
Screw, Hex, M8 X 1.25 X 25, Ss, Sems, 2-25, 2-27, 2-31, 2-33, 3-3, 3-11
Screw, Hex, M8 X 1.25 X 30, Nl, Ss, 2-23, 3-15
Screw, Hex, M8 X 1.25 X 30, Ss, Sems, 2-5, 2-21
Screw, Hex, M8 X 1.25 X 35, Fl, Ss, 2-27, 3-35
Screw, Hex, M8 X 1.25 X 35, Nl, Ss, 2-33
Screw, Hex, M8 X 1.25 X 40, Ss, 2-13, 2-23
Screw, Hex, M8 X 1.25 X 60, Fl, Ss, 2-31, 3-3
Screw, Pan, Phl, .31–18 X 1.00, G2, 2-15, 2-17
Screw, Pan, Phl, 06 X 0.50, Fmg/Ab, Blk, 2-11, 3-47
Screw, Pan, Phl, 06–20 X 0.50, Fmg/Ab, 3-25
Screw, Pan, Phl, 12–16 X 0.50, F/ Plstc, 2-45
Screw, Pan, Phl, M3 X 0.50 X 10, 4.8, 3-25
Screw, Pan, Phl, M3 X 0.50 X 16, 4.8, 2-45
Screw, Pan, Phl, M3 X 0.50 X 20, 4.8, 2-25, 2-43, 3-37, 3-39
Screw, Pan, Phl, M3 X 0.50 X 25, 4.8, 3-5
Screw, Pan, Phl, M3 X 0.50 X 30, 4.8, 2-43
Screw, Pan, Phl, M4 X 0.70 X 10, 4.8, 3-8
Screw, Pan, Phl, M4 X 0.70 X 16, 4.8, 2-37, 2-47, 3-25
Screw, Pan, Phl, M4 X 0.70 X 6, 4.8, 2-35
Screw, Pan, Phl, M5X0.80 X 40, 4.8, 2-9
Screw, Pan, Phl, M6 X 1.00 X 20, 4.8, 1-1, 2-21
Screw, Pan, Phl, M6 X 1.00 X 25, 4.8, 2-13
Screw, Pan, Phl, M6 X 1.00 X 35, 4.8, 2-51
Screw, Set, M8 X 1.25 X 35, Nl, 2-49
Screw, Soc, M10 X 1.50 X 35, 12.9, 2-39
Seal, Afmkt, Bulb, Str, .50d F/11ga 08ft, 3-43
Seal, Afmkt, Bulb, Str, .75d F/07ga 01ft, 2-9
Seal, Afmkt, Bulb, Str, 1.12, 0.88w 08ft, 2-39
Seal, Afmkt, Rbr, Clsd, Adh, 02ft, 2-49
Seal, Afmkt, Rbr, Clsd, Adh, 08ft, 2-39
Seal, Afmkt, Rbr, Open, Adh, 08ft (High Dump), 2-37
Seal, Afmkt, Rbr, Open, Adh, 08ft (Low Dump), 2-37
Seal, Afmkt, Ure, Adh, 0.38, 0.75w 08ft, 3-8
Seal, Afmkt, Wiper, 03ft, 3-15
Seal, Foam, 2-35, 3-8
Seal, Foam, 1.00 1.00w 5.0l, 2-39
Seal, Lip, 90, 1.3w . Grip 050.0l, 2-9

Seal, Rbr, Clsd, .50, .50w, Adh, Afmkt, 3-15
Seal, Rbr, Clsd, 0.375, 5.0d 2.5h, 3-8
Seal, Ure, 0.50, 0.75w, 17.0l Adh (High Dump), 2-37
Seal, Ure, 0.50, 0.75w, 17.0l Adh (Low Dump), 2-37
Seal, Ure, 0.50, 0.75w, 21.0l Ad (High Dump), 2-37
Seal, Ure, 0.50, 0.75w, 21.0l Ad (Low Dump), 2-37
Seat Kit, Deluxe, Ci [S16], 2-17
Seat Kit, Std, Ci [T12], 2-15
Seat, Dlx, W/ Armrests & Orange Seatbelt, 2-17
Seat, Std [Milsco], 2-15
Seatbelt, Orange, Retractable, Afmkt, 2-17
Sensor Assy, Pressure, 0.18 Psi, 3-20
Sensor, Position [Hall], 3-2
Sensor, Press, 5.0 Inch, 2-35
Shaft Assy, Steering, Basic, 2-11
Shaft Wldt, Crank (HIGH DUMP), 2-27
Shaft Wldt, Crank (LOW DUMP), 2-27
Shaft, Drive, Brush, 2-21
Shaft, Pivot, 2-35
Sheave, 09grv, 1.61pd 0.55b [Pj], 2-21
Sheave, 09grv, 4.13pd 0.75b [Pj], 2-21
Shock Absorber, 2.3 Strk, 2-23
Shroud, Front, Afmkt [T12], 2-9
Skirt Assy, Front [Light Litter], 1-1, 3-43
Skirt Assy, Front [Sand], 1-1
Skirt Kit, Debris, Lrg, Swp, Ci, 2-27
Skirt Kit, Front, Swp, Ci, 2-27
Skirt, Brush, Side, 1-1, 3-13, 3-17
Skirt, Door, 1-1, 3-15
Skirt, Front, 1-1, 3-13, 3-17
Skirt, Hinge, 2-27
Skirt, Rear, Side, 3-15
Skirt, Recirculation, 1-1, 2-29
Skirt, Swp, 1-1, 2-29
Skirt, Swp, Lh, 1-1, 2-29
Skirt, Swp, Lh [Carpet], 1-1, 3-43
Skirt, Swp, Rear, 1-1, 2-29
Skirt, Swp, Rh, 1-1, 2-29
Skirt, Swp, Rh [Carpet], 1-1, 3-43
Sleeve, 10.1mmb 16.0mmd 9.5mml, 2-41
Sleeve, 25.0mmd 12.2mmb 11.8mml, 2-43
Sleeve, Flange, 2-13
Sleeve, Nyl, 1.22id 35.0l, 2-64
Sleeve, P/M, 0.25b 0.38d 0.1l [430ss], 2-17
Sleeve, P/M, 0.25b 0.38d 0.2l [430ss], 2-35
Sleeve, P/M, 0.25b 0.38d 0.8l, 2-51
Sleeve, P/M, 0.32b 0.44d 0.2l [430ss], 2-13
Sleeve, P/M, 0.32b 0.50d 0.7l [430ss], 2-23, 3-35
Sleeve, P/M, 0.50b 0.63d 0.3l, Pl, 2-25
Spacer, 0.39b, 0.50d, 0.12l, 2-11, 3-47
Spacer, Battery, 0.50 X 3.0 X 10.0, 2-53, 3-27
Spacer, Battery, 0.75 X 3.0 X 12.5, 2-53, 3-27, 3-29, 3-31, 3-33
Spacer, Battery, 0.75 X 3.0 X 21.0, 3-27, 3-29, 3-31, 3-33
Spacer, Battery, 4.25 X 4.25 X 15.0, 3-29, 3-31, 3-33
Spacer, Battery, Foam, 1.25 X 3.3 X 13.7, 2-53, 3-27, 3-33
Spacer, Battery, Foam, 3.25 X 7.5 X 7, 2-53, 3-27, 3-29, 3-31, 3-33
Spacer, Brg, 2-21
Spacer, Brush, 2-31, 3-3
Spacer, Plstc, 0.20b 0.32d 0.47l, Nyl, 2-11, 3-47
Spacer, Rnd, .38b .88d .38l, 2-15, 2-17
Spring, Extn, 2-25
Spring, Extn, 0.35od 0.05wir 02.8l, 3-2
Spring, Extn, 0.50od 0.06wir 04.0l, 2-33
Spring, Extn, 0.50od 0.06wir 04.0l (HIGH DUMP), 2-27
Spring, Extn, 0.50od 0.06wir 04.0l (LOW DUMP), 2-27
Spring, Extn, 0.50od 0.07wir 03.0l, 3-2
Spring, Extn, 0.75od 0.07wir 03.5l, 3-5
Spring, Extn, 0.96od 0.12wir 8.73l, 2-23
Spring, Extn, 1.05od 0.13wir 5.00l, 2-31, 3-3
Spring, Tors, 0.55id .05wir 04.0coil, 3-2
Spring, Tors, 0.75id .06wir 02.8coil, 3-8
Spring, Tors, 0.87id .25wir 13.0coil, Rh, 2-31, 3-3
Stand-Off, Circuitboard [0.25"], 2-47
Stand-Off, Wir, M8, Insulator, Panel, 2-49
Steer-Control Assy, Wheel Drive, 2-19, 3-3
Steer-Control Assy, Wheel Drive [T12] (See Breakdowns) (Obsolete, Replaced by 1256309), 2-19
Stop Wldt, Lh, 2-39
Stop Wldt, Rh, 2-39
Strainrelief, 2-37
Strap, Skirt, Front, 3-17
Strap, Static, W/Grommet, .19 1.1w 25.0l, 2-5
Stud, Ball, .39d .31-18, 2-13, 2-17
Stud, Ball, 10mm Ball, M8x1.25 Stud, 2-35, 3-8, 3-20
Switch Wldt, Hppr, 2-43
Switch, 0.1a, Spdt[Micro, Gold Contacts], 2-25, 2-43, 3-5
Switch, Ignition [Merit Gmbh], 2-11
Switch, Rocker, Dpdt, On / None / On, 2-11
Switch, Rocker, Prgrsv, 2-11, 3-23, 3-25
Switch, Safety, Shutoff, 2-11
Switch, Seat, No [Delta 6440-04], 2-15, 2-17
Switch, Snap, 15a, Rlr, 3-37, 3-39
Switch, Thermal, 160deg, Spdt, 2-37
Switch, Wobble, Spdt, 250vac, 15a, 2-43

T

Taillight [24-36vdc, Jw Speaker], 3-25
Tank Assy, Abw 4.0l, 3-41
Tie, Cable, 6.0l, 1.25d Max, 3-47
Tie, Cable, 11.3l, 2.75d Max, 3-35
Tie, Cable, Nyl, 11.0l, .14w, 3.0 Max. D, 2-9, 3-42
Tire Assy, Solid, 300mm X 100mm, Ure, 2-19
Tool, Installation, Belt, 1-1, 2-21
Tower Wldt, Ld, Left (Low Dump Only), 2-5
Tower Wldt, Ld, Right (Low Dump Only), 2-5
Tower Wldt, Left, Afmkt [S16 Jp] (High Dump Only), 2-5
Tower Wldt, Left, Afmkt [S16 Na] (High Dump Only), 2-5
Tower Wldt, Right, Afmkt [S16 Jp] (High Dump Only), 2-5
Tower Wldt, Right, Afmkt [S16 Na] (High Dump Only), 2-5
Track, Locking, 12.5l, No Stud W/Handle, 2-15, 2-17
Track, N-Lkg, Seat, 12.5l, No Stud, 2-15, 2-17
Tray, Battery, 2-53
Tread, Non-Skid-Step, 5.5w 13.8l, 2-5
Tube Wldt, Base, 2-33
Tube Wldt, Ohg, Lh, 3-11
Tube Wldt, Ohg, Rh, 3-11
Tube Wldt, Vacuum, 3-5
Tube, 0.32id 0.50od 00.4l, Ss, 2-33
Tube, 0.33id 0.51od 00.8l, Stl, Pl, 2-33
Tube, 0.38id 0.500d 2.19l, Ss, 3-8
Tube, 0.41id 0.75od 02.56l, Stl, 3-5
Tube, Handle, 3-45
Tube, Vacuum, Alm, 3-5

V

Valve, Ball, Bm06/Bm06, Pvc, W/Handle, 2-53

W

Washer, Flat, 0.17b 0.31d .03, Nyl, 2-47
Washer, Flat, 0.19b 0.44d .05, Pl, 08, 2-17, 2-37, 3-8, 3-9
Washer, Flat, 0.22b 0.44d .03, Nyl, 3-47
Washer, Flat, 0.25, Fendr, 2-13
Washer, Flat, 0.25, Sae, 2-45, 2-51, 3-8
Washer, Flat, 0.25, Std, 2-35
Washer, Flat, 0.25b 0.56d .05, Pl, 10, 2-13, 2-31, 2-39, 3-3
Washer, Flat, 0.25B 0.56D, .05, Pl, 10, 2-9
Washer, Flat, 0.25b 1.12d .12, Ss, 2-29
Washer, Flat, 0.27b 0.69d .05, Ss, 2-5, 2-11, 2-17, 2-21, 2-27, 2-29, 2-31, 2-35, 2-37, 2-39, 3-3, 3-13, 3-15, 3-17, 3-20, 3-35, 3-41, 3-47
Washer, Flat, 0.28b 1.00d .06, Stl, 2-17, 3-8
Washer, Flat, 0.31, Sae, 2-27, 2-51, 3-35, 3-37, 3-39, 3-41

Washer, Flat, 0.31, Std, 2-9, 2-11, 2-13, 2-19, 2-33, 2-35, 2-37, 3-8, 3-20
Washer, Flat, 0.31b 0.75d .06, Nyl, 2-13
Washer, Flat, 0.32b 1.00d .12, Ss, 2-21, 2-23, 2-27, 2-39
Washer, Flat, 0.34b 1.25d .11, Ss, 3-15
Washer, Flat, 0.38, Std, 2-5, 2-9, 2-13, 2-19, 2-29, 2-33, 2-39, 2-41, 2-45, 3-5, 3-11
Washer, Flat, 0.38b 0.88d .08, Ss, 2-15, 2-17, 2-23, 2-25, 2-31, 2-35, 2-45, 2-49, 3-3, 3-8, 3-11, 3-13, 3-17
Washer, Flat, 0.40b 1.12d .12, Ss, 2-41
Washer, Flat, 0.41b 1.50d .19, Stl, Pl, 2-35
Washer, Flat, 0.44b 1.00d .08, Ss, 2-23, 2-45
Washer, Flat, 0.50, Std, 2-11
Washer, Flat, 0.51b 1.00d .03, Nyl, 2-23, 2-27
Washer, Flat, 0.52b 1.25d .06, Nyl, 2-33
Washer, Flat, 0.53b 1.06d .10, Stl, Pl, 2-25, 2-33, 2-43
Washer, Flat, 0.56b 1.38d .11, Ss, 2-25, 2-31, 3-3
Washer, Flat, 0.56b 1.38d .11, Stl, Pl, 2-43
Washer, Flat, 0.66b 2.50d .12, Ss, 2-31, 3-3
Washer, Flat, 0.67b 1.00d .13l, Nyl, 2-41
Washer, Flat, 0.91b 1.38d .06, Stl, Pl, 2-11, 2-45
Washer, Flat, 1.26b 3.00d .12, Pye, 2-43
Washer, Flat, 10, Ss, 2-49, 3-29, 3-31, 3-33, 3-47
Washer, Flat, Belleville, .25, 2-21
Washer, Lock, Int–Ext, 0.25, 2-11, 2-37, 2-39, 2-47, 3-20, 3-35, 3-37, 3-39, 3-47
Washer, Lock, Int–Ext, 0.31, 2-5, 2-37
Washer, Lock, Int, 0.25, 2-51
Washer, Lock, Int, 0.31, 2-19, 2-51, 3-35, 3-37, 3-39
Washer, Lock, Int, 04, 3-37, 3-39
Washer, Thrust, 0.51b 1.00d 0.12w, Brz, 2-31, 3-3
Wheel Assy, Drive, Ac, W/ Brake, 2-19
Wheel, 04.0d 2.56w 0.41b, 1-1, 2-5, 3-13, 3-17
Wheel, Caster, 5.0 D, Non Swivel, 2-33
Wheel, Steering, 14.0d, Taper Bore, 2-11
Wire, Tie [W/.25 Fir Tree Clip], 2-49, 3-35
Wire, Tie [W/.25” Fir Tree Clip], 2-5, 2-25, 2-31, 2-35, 2-43, 2-47, 2-53, 3-3, 3-23, 3-25, 3-41