i-mop® Lite

Auto scrubber for hard floor surfaces

User manual

Model part No. : 1263271 - i-mop Lite (N. America)
Model part No. : 1267978 - i-mop Lite (Europe)
Model part No. : 1267982 - i-mop Lite (Brazil)

Tennant Company

10400 Clean Street, Eden Prairie,
MN 55344-2650
Telephone: (800) 553-8033
Internet: www.tennantco.com

Tennant N.V.

Industrielaan 6 5405 AB

P.O. Box 6 5400 AA, Uden -The Netherlands

Europe@tennantco.com

To view, print, download the parts manual visit:
www.tennantco.com/manuals

Revision: 01 (03/2024)

Preface

Thank you for choosing the i-mop® Lite, the auto scrubber that cleans faster, cleaner, safer, greener, and is better for everyone. The i-mop® Lite's compact design allows you to clean right to the edge and under obstacles, minimizing manual scrubbing. The battery operated i-mop® Lite is equipped with two counter-rotating brushes that provide a deep scrub and a great cleaning result. The i-mop® Lite significantly reduces the amount of water and chemicals needed which leads to a greener result. It also reduces the risk of slippery floors.

Antibacterial tanks

The tanks on the i-mop® use an antibacterial mix-in to make the plastic safer both inside and outside. Because it is mixed into the plastic, the effect will last the lifetime of the tank. The reduction of bacteria reduces the odours coming from the recovery tank and protects operators who handle the tank every day. Bacterial reduction in contact with the tank wall has been certified and tested at ≥99.99% efficacy.

Purpose of the user manual

The purpose of the user manual is to provide the user with information in such a way that during the life of the i-mop® Lite, the machine is used correctly, efficiently and safely, even in the event of reasonably foreseeable misuse, as described in section 1.2 of this manual.

The user manual contains instructions regarding:

- Personal operator safety
- Intended and non-intended use of the i-mop® Lite
- Instructions for daily use
- Maintenance instructions
- Storage conditions
- Disposal of the i-mop® Lite

These instructions must be considered to avoid risks that could lead to physical and/or material damage.

Target audience

This user manual is intended for operators of the i-mop® Lite and their supervisors, as well as partners and importers.

Operators of the i-mop® Lite

The i-mop® Lite may only be operated by a person who has correctly read and understood the instructions in this manual or is trained by an experienced operator who has read and understood the instructions in this manual.

Reading guide

The following symbols and terms are used throughout this manual to alert the reader to safety issues and important information:

Symbol	Term	Explanation
	INFORMATION	Read the instructions before using the machine.
	WARNING	Indicates a hazardous situation which, if the safety instructions are not followed, can lead to injuries of the operator or bystanders and light and/or moderate damage to the product or the environment.
	CAUTION	Indicates a hazardous situation which, if the safety instructions are not followed, can lead to light and / or moderate damage to the product or the environment.
	ATTENTION	Indicates a liability situation, where the manufacturer or its partners and affiliates cannot be held accountable for damages caused by non-compliance.
	STRONG MAGNET	Indicates that the machine contains strong magnets. These can cause pacemakers to stop working or cause electronic data to be damaged, such as information stored on access passes.
	PACEMAKER	Indicates that operators and maintenance crew wearing pacemakers should keep a minimal distance of 6 in / 15 cm. In this specific case operators may not use the machine as a backpack.
	BATTERIES	Indicates a battery-operated machine, batteries must be charged according to the instructions in the separate class I battery charger user manual. Batteries must be disposed of according to your local laws and regulations.
	SLIPPERY SURFACE	Indicates that the machine can cause floors to become slippery. In the workplace, it is advised to place slippery surface signs in these areas.

Content

Preface 2

Purpose of the user manual 3

Target audience 3

Operators of the i-mop® Lite 3

Reading guide 4

Content 5

1. Introduction 7

1.1. Intended use of the product 7

1.2. Non-intended use of the product 8

1.3. Lifespan 8

1.4. Modifications 8

1.5. Specifications 9

1.6. Warranty 10

1.7. Identification 10

2. Description 11

3. Safety 12

3.1. General safety instructions 12

3.1.1 Sweep before scrub 12

3.1.2 Brush condition 12

3.1.3 Machine orientation 12

3.1.4 Antibacterial tanks 12

3.1.5 Strong magnets 12

3.1.6 Battery 12

3.2. Risks during operation 13

3.2.1 Dress safely 13

3.2.2 Mark the job site 13

3.2.3 Careful when parking 13

3.3. Risks after operation 13

3.3.1 Remove battery 13

3.3.2 Machine orientation 13

3.3.3 Careful when storing 13

4. Transport and storage 14

4.1. General 14

4.2. Store position 14

4.3. Transport outside 15

4.4. Transport in a vehicle 16

5. Assembly and installation 17

5.1. Unboxing 17

5.2. Assembly 18
5.2.1 Charging the battery 18
5.2.2 Attaching the brushes 18
5.2.3 Attaching the squeegee 19
5.2.4 Installing the cleaning solution tank 19
5.2.5 Installing the recovery tank 20

6. Operation 21

6.1. Before you start 21
6.1.1 Inserting the battery 21
6.1.2 Filling the cleaning solution tank 22

6.2. Operation procedure 23
6.2.1 Walking to the job site 23
6.2.2 At the job site 24
6.2.3 ECO mode 27
6.2.4 Turning off the i-mop® Lite 27
6.2.5 Emptying tanks 27

6.3. Cleaning and storage 28
6.3.1 Flushing the system 28
6.3.2 Cleaning the tanks 28
6.3.3 Cleaning the filter 28
6.3.4 Removing the battery 29
6.3.5 Checking the brushes and squeegee 29
6.3.6 Store in an upright position 30

7. Maintenance 31

7.1. Brush replacement 31

7.2. Squeegee replacement 32
7.2.1 Detaching the squeegee 32
7.2.2 Flipping/replacing the squeegee blade 32
7.2.3 Attaching the squeegee 33

7.3. Recommended additional cleaning 33

7.4. Recommended service time 33

7.5. Accessories 33

8. Troubleshooting 34

9. Decommissioning and disposal 35

10. Parts 36

1. Introduction

The i-mop® Lite is a safe, user-friendly machine. This manual helps you to get started and explains the operation and maintenance procedure. You will be pleasantly surprised by the fast and effective use of the battery operated i-mop® Lite. The batteries must be fully charged before use. Refer to the operating manual supplied with battery charger (p/n 1263273) for correct charging procedure.

This manual is intended for those who work with the i-mop® Lite and/or perform daily maintenance. The manual must be read fully before the first actions. This manual describes the correct method of use, safety measures, maintenance and transport.

The manufacturer continuously improves all their products based on user experience and feedback. Any deviations between the texts and/or images from the manual and your i-mop® Lite can therefore arise from the difference in model or from possible changes due to continuous development and innovation.

1.1. Intended use of the product

The i-mop® Lite is a specialized machine for scrubbing hard floor surfaces. You can use any type of water-based scrubbing detergent.

The fluid tank, brushes and squeegee come in HACCP color coded versions (blue, green, red, yellow and orange). All three items can be easily replaced. This allows you to use different cleaning solutions, — for instance, when you move from the food preparing area to the restaurant. Make sure that the color code for the fluid tank, brush and squeegee ALWAYS match each other.

Figure 1

1.2. Non-intended use of the product

WARNING
Non-intended use can have consequences for the safety of operators and bystanders and will void the warranty on the product.

- **NEVER** operate the i-mop® Lite near flammable dusts, liquids or vapors.
- **NEVER** operate the i-mop® Lite when flammable or poisonous liquids like gasoline, oil, acids, or other volatile substances are on the floor.
- **DO NOT** fill the i-mop® Lite with any flammable detergent. **ONLY** use the water-based cleaning solutions.
- **DO NOT** use water that exceeds 113°F / 45°C. Using water warmer than this temperature will void the tank warranty.
- **DO NOT** use cleaning solutions with a pH level below 3 or above 11 in order to prevent damage to sensitive components.
- **DO NOT** use the i-mop® Lite outdoors or on uneven surfaces.
- **DO NOT** operate this i-mop® Lite over electrical floor outlets in order to avoid electrical shock.
- **NO RIDERS!** Do not carry passengers on top of the i-mop® Lite.
- **DO NOT** use the i-mop® Lite as stepladder or platform.
- **DO NOT** store the i-mop® Lite outside in order to avoid damage to electronic components.
- **ONLY** use manufacturer-supplied parts for maintenance.
- **KEEP AWAY** from children! The i-mop® Lite is a professional cleaning machine to be used by trained adults only.

1.3. Lifespan

Each i-mop® Lite is guaranteed to operate for at least 2000 hours. The wear on brushes and squeegee heavily depends on the roughness of the surface. They need to be checked regularly.

CAUTION
To ensure proper and safe operation throughout the life of the i-mop® Lite, the machine must be checked by an authorized i-team partner every 500 hours..

1.4. Modifications

It is not permitted to make modifications to the design of the i-mop® Lite without consultation and permission from the manufacturer. This affects the warranty, see section 1.6 of this manual.

1.5. Specifications

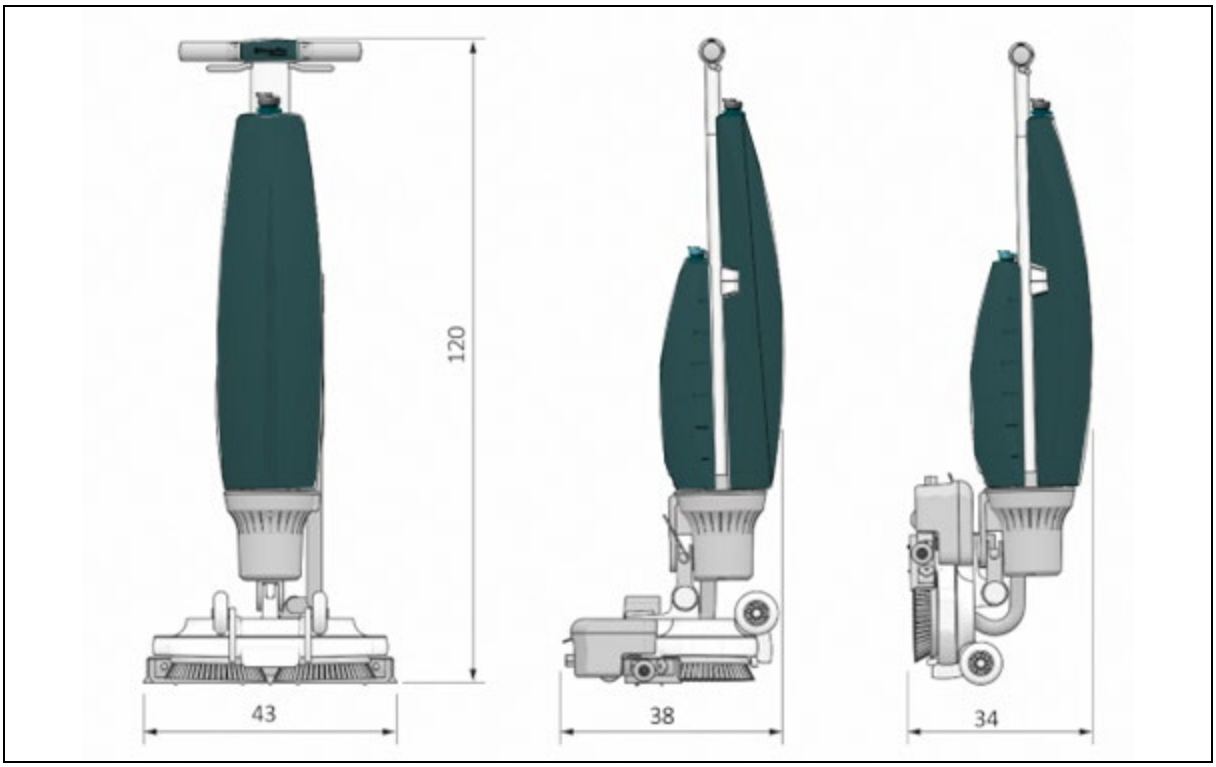

Figure 2

Product size:	120 x 43 x 38 cm	| 47.24”x16.93”x 14.96”
Product size in store position:	120 x 43 x 34 cm	| 47.24”x16.93”x 13.38”
Weight (including Battery):	12.5 kg	| 27.56 lbs
Li-on battery:	DC (18V, 12.48Ah, 250Wh)	
Battery capacity:	1 Battery	
Operation time of batteries:	45 min	
Brush pressure:	13 kg	| 28.66 lbs
Brush speed:	500 rpm	
Solution tank capacity:	3 L	| 0.79 gallon
Recovery tank capacity:	5 L / 3 L recommended max | 1.32/0.79 gallon	
Vibration:	Amplitude (mm) <= 0.5086 Velocity (m/s) <= 0.0068 Acceleration (m/s^2) <= 1.435	
Noise level (1m):	68 Db	
Theoretical performance:	Up to 1400 m^2 per hour | 15069 ft2 p/h	
Practical performance:	700 - 1000 m^2 per hour | 7534-10763 ft2 p/h	
Castor wheels:	YES	
Power cut off at store position:	NO	
Angle power cut off:	YES < 32°	
Hour counter:	NO	
Fluid Shortage Warning:	NO	

1.6. Warranty

The i-mop® Lite should be used as intended and described in this manual. Using the i-mop® Lite outside will void the warranty on the product.
Fill out the supplied machine installation/warranty report and send to Tennant.

1.7. Identification

The ID tag, containing a serial number and production number, can be found on the bar behind the wastewater tank.

1. Serial number
2. Production day
3. Production year

Figure 3

2. Description

The compact i-mop® Lite consists of two main parts:

- The body that contains the motor, cleaning solution tank, recovery tank, handle with triggers and control panel.
- The scrub deck that contains the brushes and squeegee.

The i-mop® Lite can be folded into a store position; this is recommended for storage.

The i-mop® Lite consists of:

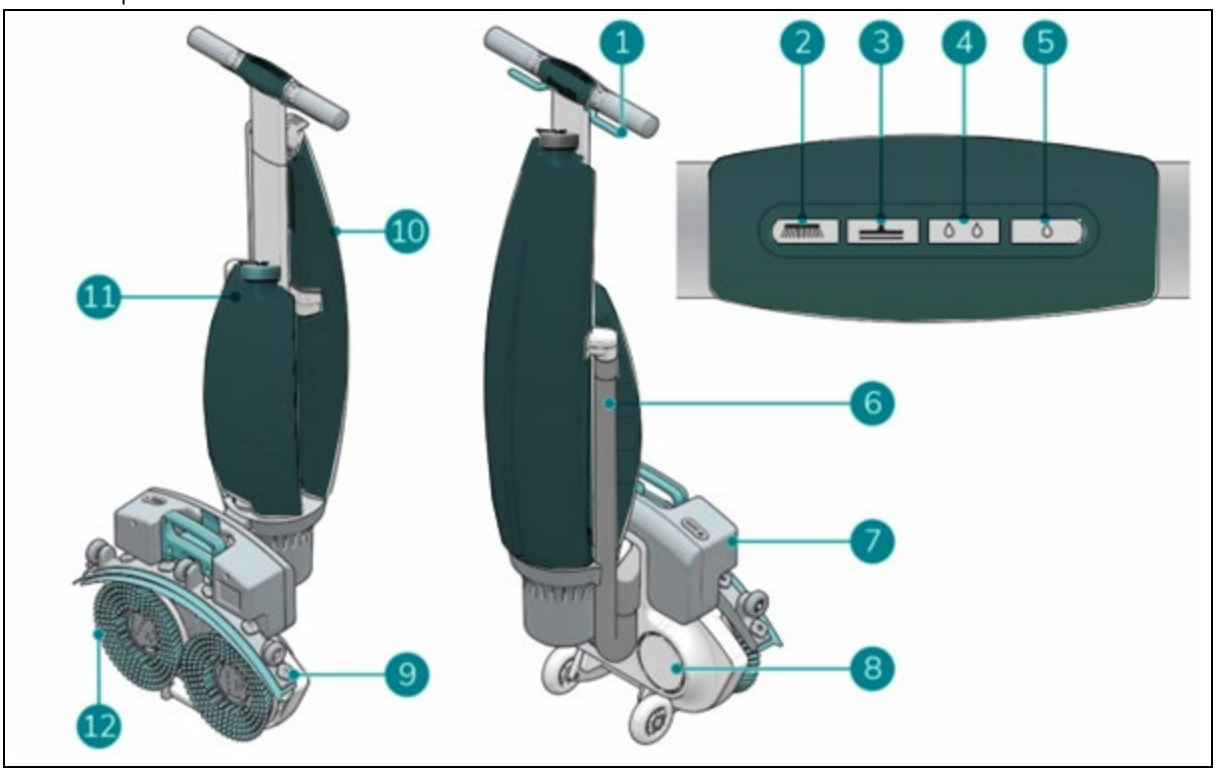

Figure 4

Legend

1. Trigger
2. Control panel – Brush on
3. Control panel – Vacuum on
4. Control panel – High water level
5. Control panel – Low water level
6. Vacuum hose
7. Battery
8. Scrub deck
9. Squeegee
10. Recovery tank
11. Solution tank
12. Rotating brushes

3. Safety

Safety comes first. Therefore, please take your time to read and understand these safety instructions. Improper use can case cause harm or void the manufacturer's warranty.

3.1. General safety instructions

3.1.1 Sweep before scrub

Remove loose objects from the floor that can be propelled by or caught in the rotating brushes.

3.1.2 Brush condition

Make sure to check the condition of the brush before use. Change the brush only when the machine is turned off and in the stored position.

3.1.3 Machine orientation

Always keep the body of the i-mop® Lite in an upright position when inserting cleaning fluid or battery.

3.1.4 Antibacterial tanks

Always keep the antibacterial tanks of the i-mop® Lite out of direct sunlight. This can cause discoloration.

3.1.5 Strong magnets

CAUTION

Please be aware of the integrated magnets that hold the fluid tanks in place and on the scrub deck.

WARNING

Operators and maintenance crew wearing pacemakers should keep a minimal distance of 6 in/15 cm.

3.1.6 Battery

Always use the automatic battery charger provided by the manufacturer.

CAUTION

During normal operation, the 18V battery cause no safety hazard on their own. Please adhere to the following safety instructions regarding the battery:

- Do not crush, pierce or damage in any way.
- Do not heat or incinerate.
- Do not short-circuit.
- Do not dismantle.
- Keep dry.
- Only charge between 5°C~40°C / 41°F~104°F.
- Only use between 5°C~45°C / 41°F~113°F.

3.2. Risks during operation

3.2.1 Dress safely

Do not wear a necktie, scarf, or any loose or dangling clothing or jewelry of any type while operating this i-mop® Lite. These types of clothing or jewelry could become tangled in rotating parts, causing serious injury or death.

3.2.2 Mark the job site

WARNING

During operation the cleaning solution can cause slippery patches on the floor. Therefore, it is advised to mark the job site with a wet floor marker to warn passersby.

3.2.3 Careful when parking

Do not park the i-mop® Lite on ramps or slopes. Always park the i-mop® Lite on a level, hard surface.

3.3. Risks after operation

3.3.1 Remove battery

Remove the battery before executing any cleaning or maintenance task, or before storage.

3.3.2 Machine orientation

Always keep the body of the i-mop® Lite in the stored position when replacing brushes or squeegee. (See section 4.2 store position)

3.3.3 Careful when storing

Do not store the i-mop® Lite on ramps or slopes. Always store the i-mop® Lite on a level, hard surface. Always store the i-mop® Lite with scrub deck in the stored position.

4. Transport and storage

4.1. General

CAUTION
Always keep the body of the i-mop® Lite in an upright position when filling the cleaning solution tank or inserting the battery.

Before storage or transport, drain the machine and remove the battery after each use.

4.2. Store position

CAUTION
Please be aware of the integrated magnet on the scrub deck.

The store position is the upright vertical position for storage and maintenance tasks.
The store position will disable the power to the machine.

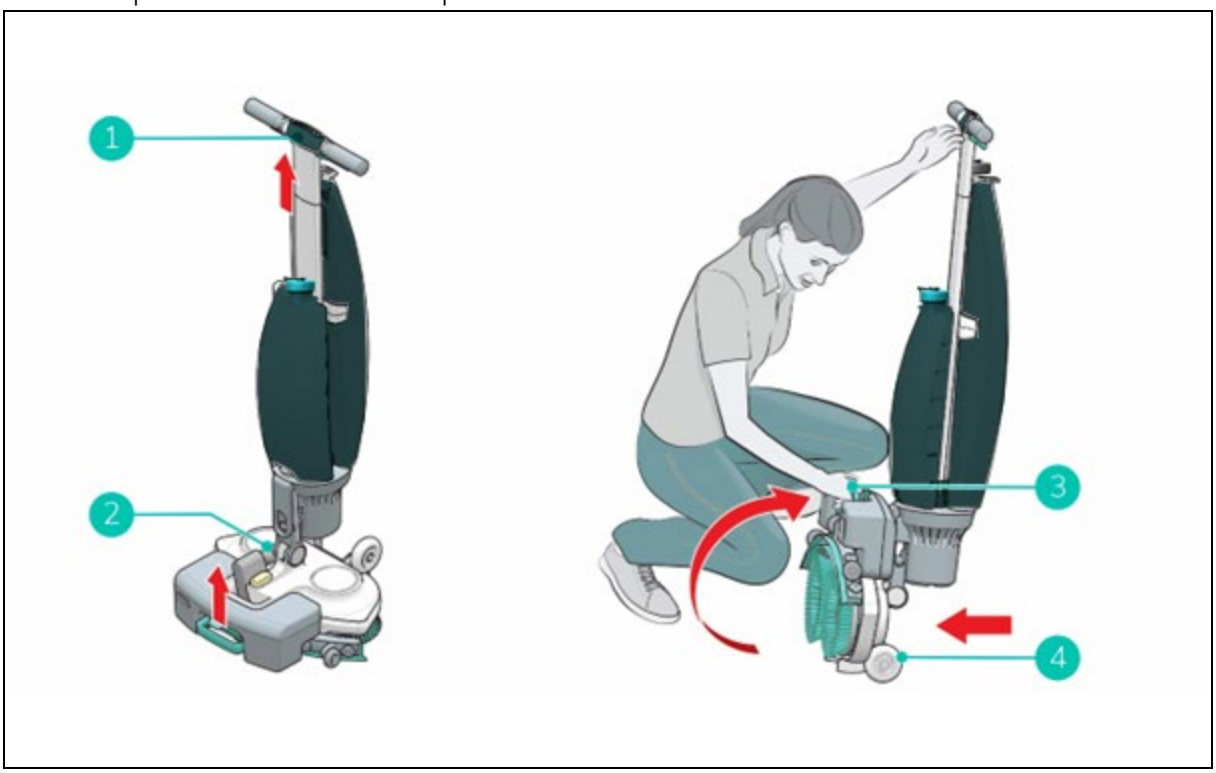

Figure 5

1. Make sure the vacuum hose (Figure 5, pos 2) is pushed back into the machine so it cannot get squeezed.
2. Crouch down and hold the handle (Figure 5, pos 1) with one hand while holding the scrub deck (Figure 5, pos 3) with your other hand.
3. Lift the scrub deck slowly until it stands upright on the front wheels (Figure 5, pos 4). Guide the body towards the scrub deck until it snaps into a resting position.

4.3. Transport outside

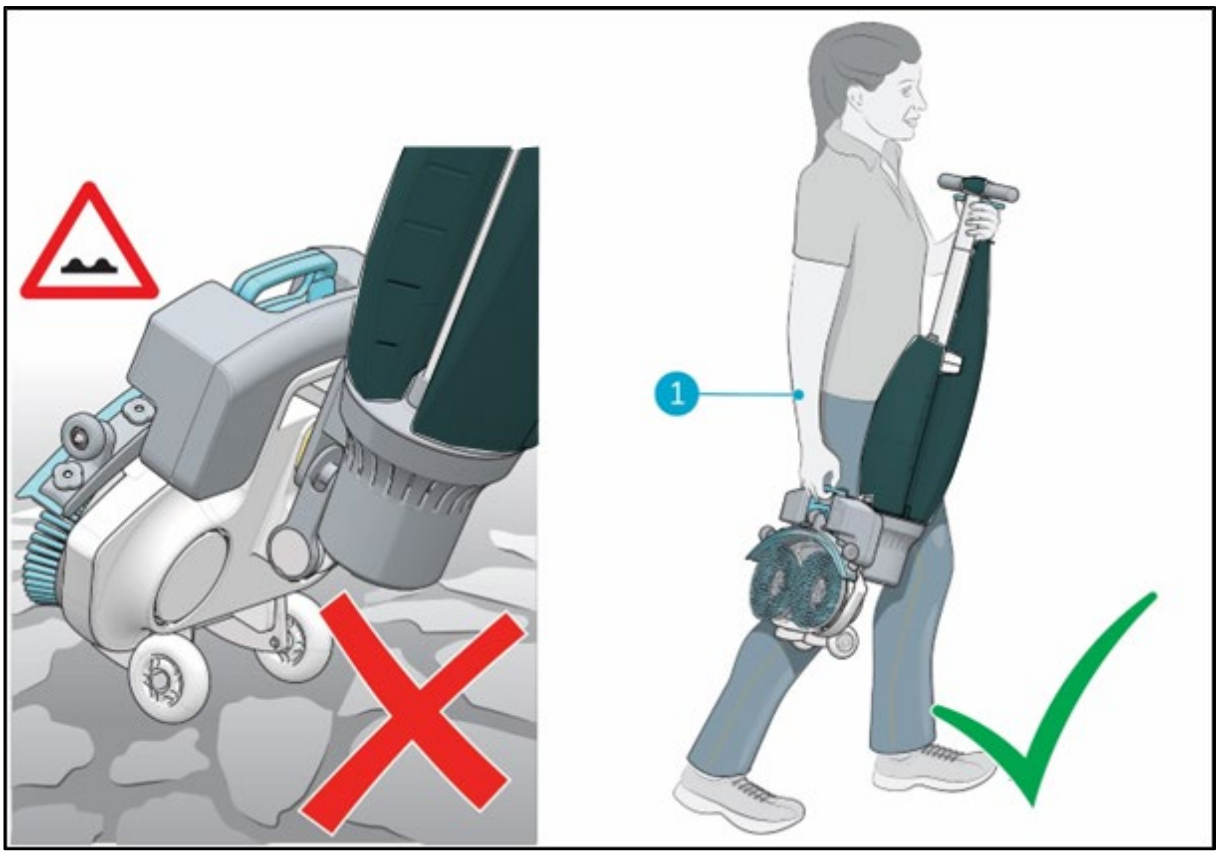

Figure 6

When outside:

1. Put the i-mop® Lite in store position, see section 4.2.
2. Carry the i-mop® Lite with one hand while holding the handle (Figure 6, pos 1) with your other hand.

CAUTION

The transport wheels are not designed to roll over dirty surfaces, sand can cause the wheels to block. Lift the i-mop® Lite while moving it from one building to another.

4.4. Transport in a vehicle

The preferred way to transport your i-mop® Lite is in an upright position and safely secured.

1. Make sure both tanks are empty.
2. Put the i-mop® Lite in store position, see section 4.2.
3. Remove the batteries.
4. Lift the i-mop® Lite into the vehicle.
5. Secure the i-mop® using a tension belt or another appropriate restraint (Figure 7, pos 1).

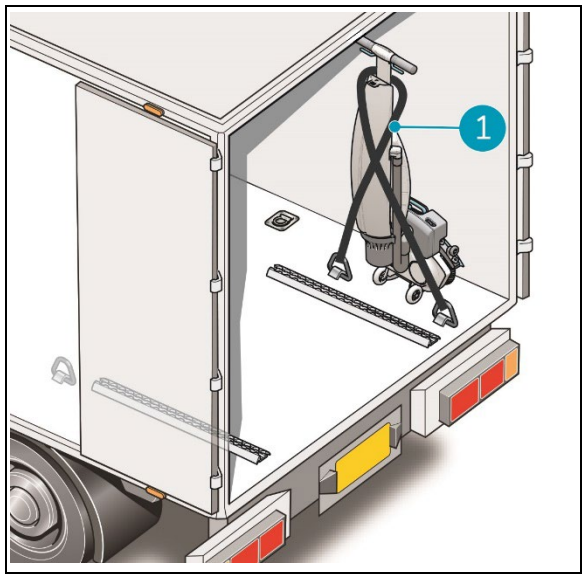

Figure 7

The i-mop® Lite is a compact machine and fits in the trunk of your car. Before loading the i-mop® Lite into your vehicle, make sure both tanks and the battery are removed or leave it as it is.

1. Put the i-mop® Lite in store position, see section 4.2.
2. Remove the battery and both tanks.
3. Set the i-mop® Lite into a vertical/store position.
4. Prevent the i-mop® Lite from moving around during transport by using a tension belt or another appropriate restraint.

CAUTION

The seal of the solution and recovery tank can be damaged during transport in horizontal position. Make sure you remove the tanks before loading the machine into your car. **Improper use will void the warranty.**

5. Assembly and installation

The i-mop® Lite does not require much assembly. Most importantly, you will have to attach the brushes and squeegee.

5.1. Unboxing

The i-mop® Lite body is packed in a single box. The battery and charger are delivered in a separate box within this packaging and can be ordered separately.

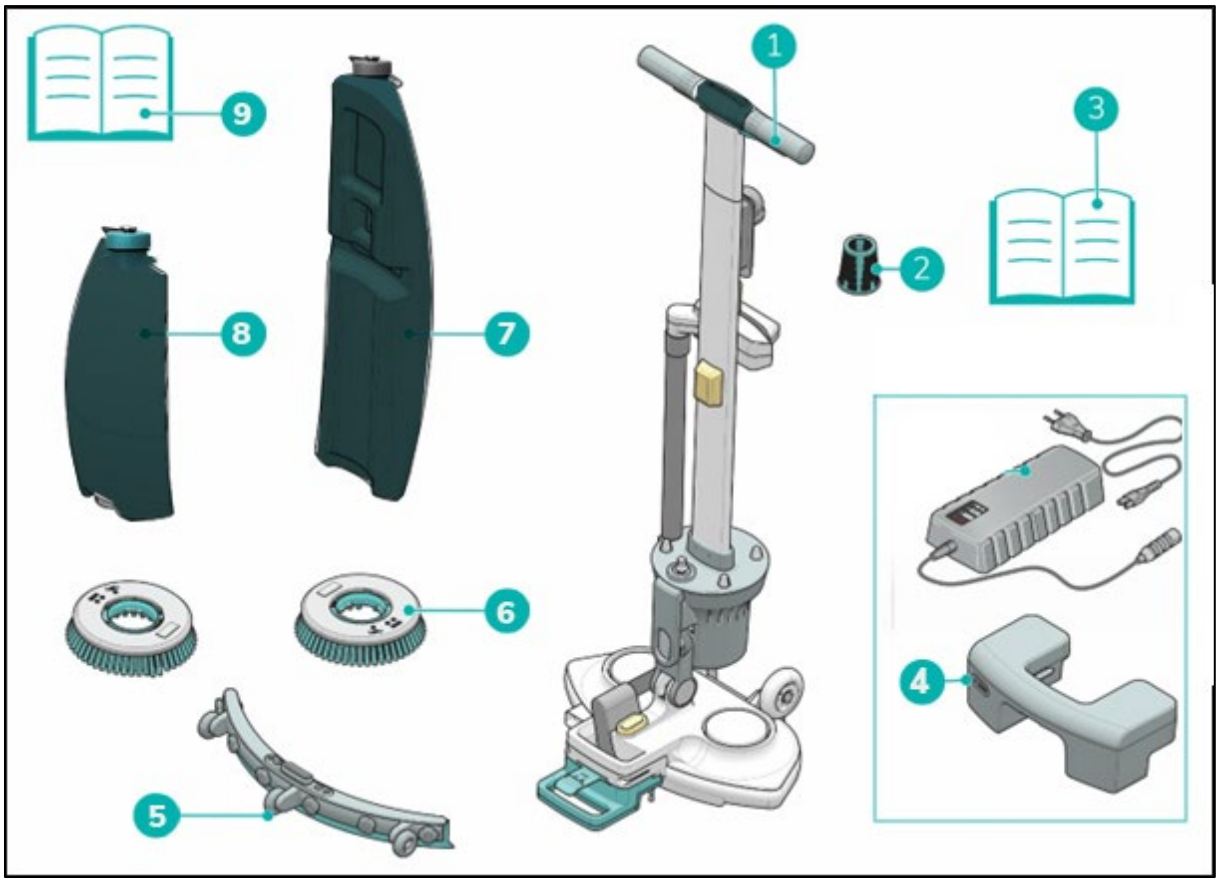

Figure 8

1. 1x i-mop® Lite main body
2. 1x suction filter
3. 1x battery charger manual
4. 1x battery charger
   1x battery
5. 1x squeegee assembly
6. 2x brushes
7. 1x recovery tank
8. 1x cleaning solution tank
9. 1x this manual

5.2. Assembly

5.2.1 Charging the battery

Charge the battery according to the instructions in the battery charger manual. Make sure the battery is charged regularly.

5.2.2 Attaching the brushes

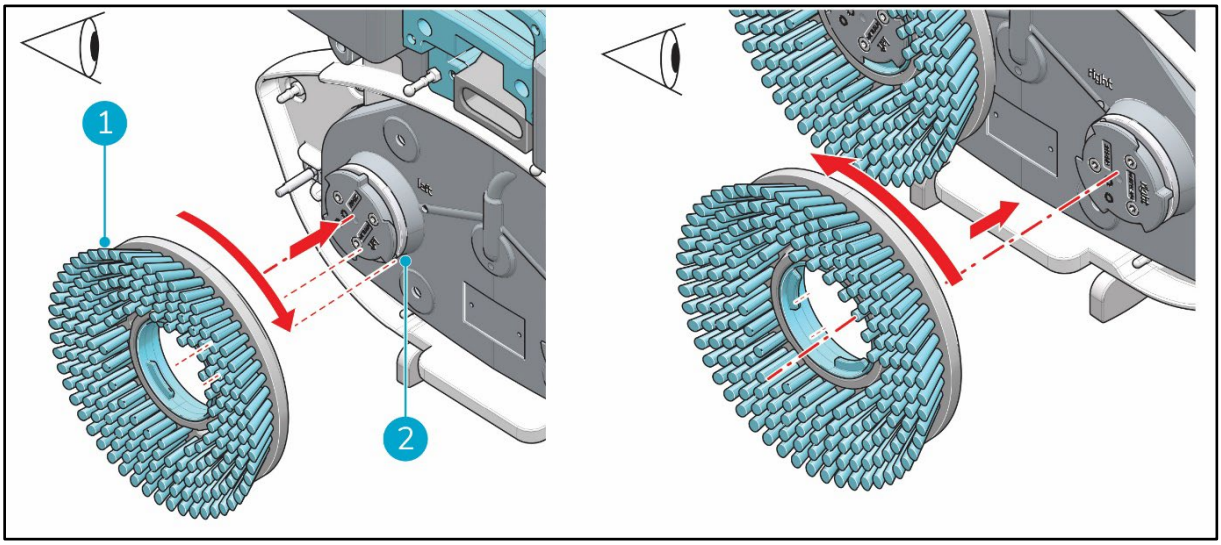

Figure 9

To attach the brushes:

1. Put the i-mop® Lite in store position, see section 4.2.
2. Hold the scrub deck firmly with one hand.
3. Align the left brush (Figure 9, pos 1) with the left motor disk (Figure 9, pos 2). Align the latches and cut-outs in the brush and motor disk.
4. Push the brush on the motor disk.
5. Turn the left brush clockwise until you see the motor disk turning. The brush is now in place.
6. Align the right brush with the right motor disk. Align the latches and cut-outs in the brush and motor disk.
7. Push the brush on the motor disk.
8. Turn the right brush anticlockwise until you see the motor disk turning. The brush is now in place.

5.2.3 Attaching the squeegee

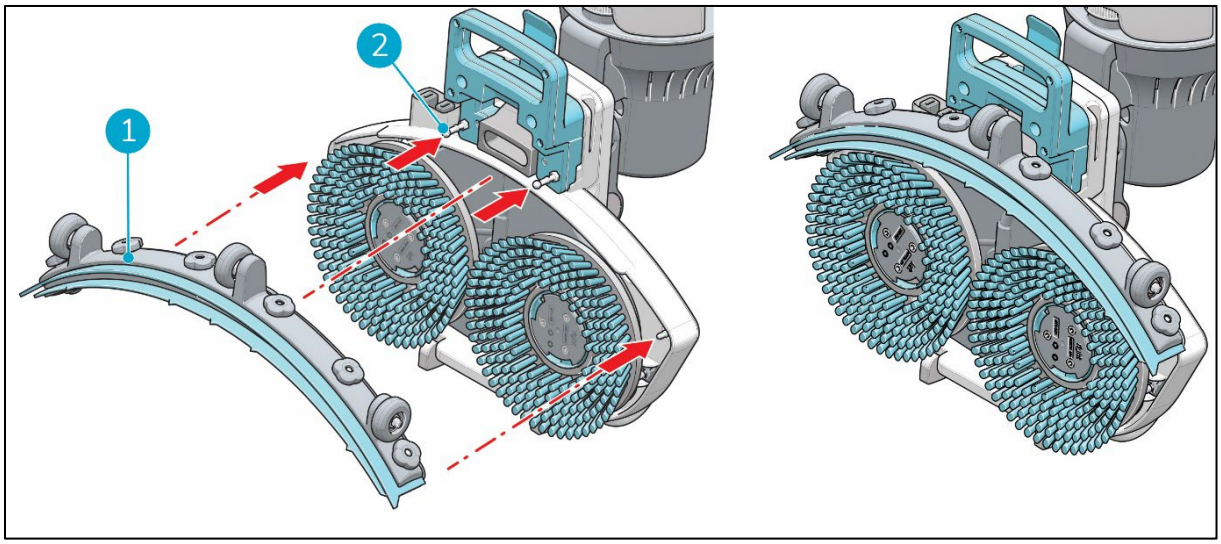

Figure 10

To attach the squeegee:

1. Hold the scrub deck firmly with one hand.
2. Align the pins on the scrub deck (Figure 10, pos 2) with the holes on the squeegee (Figure 10, pos 1).
3. Push the left side of the squeegee in place.
4. Push the right side of the squeegee in place.

5.2.4 Installing the cleaning solution tank

1. Put the tank (Figure 11, pos 1) on the i-mop® Lite with the valve first.
2. Press the tank downward on the nipple (Figure 11, pos 3) to open the valve seal.
3. Push the tank forward into place, the magnet (Figure 11, pos 2) will lock the solution tank in place.

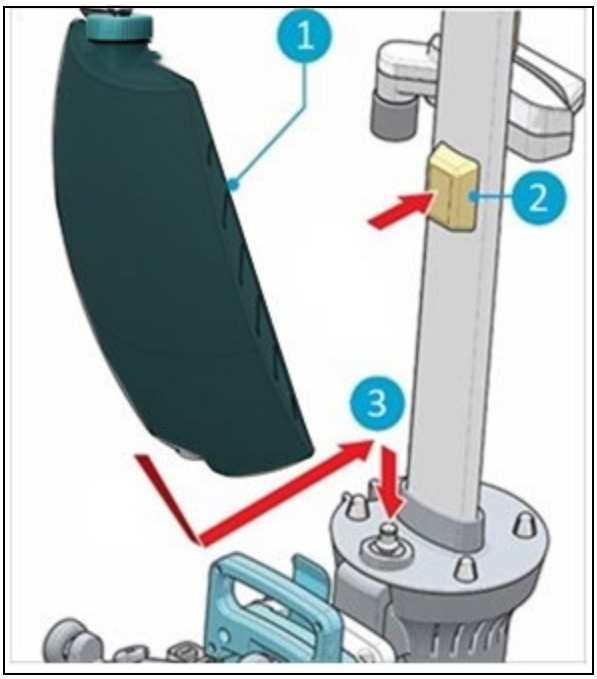

Figure 11

5.2.5 Installing the recovery tank

1. Put the tank (Figure 12, pos 1) on the i-mop® Lite with the bottom first.
2. Position the tank on the nipples.
3. Push the tank in place, the magnet will lock the recovery tank in place.

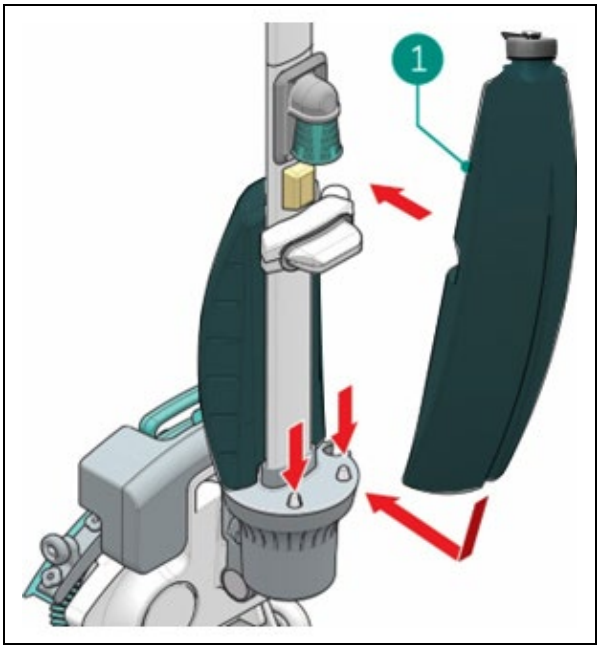

Figure 12

6. Operation

6.1. Before you start

Check the brushes and squeegee for wear and tear, see chapter 7 for maintenance instructions.

6.1.1 Inserting the battery

CAUTION

Only use i-power® batteries specifically designed for use in i-mop® devices.

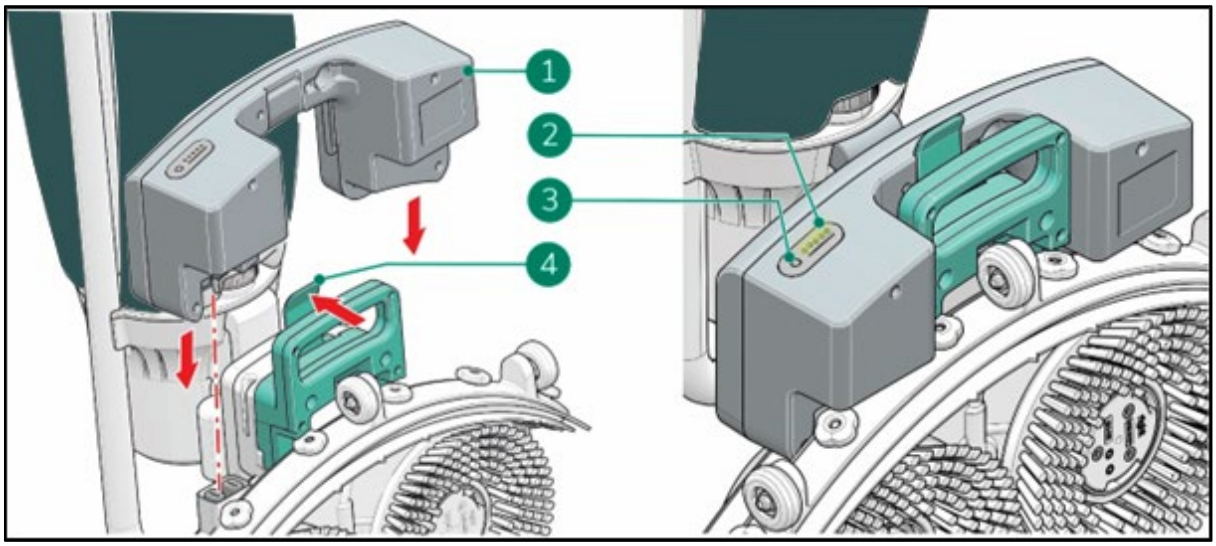

Figure 13

1. Put the i-mop® Lite in store position, see section 4.2.
2. Push the battery (Figure 13, pos 1) in the battery slot. A click indicates that the battery is locked in place by the retaining clip (Figure 13, pos 4).
3. During operation, you can check the amount of power left (Figure 13, pos 2) by pressing the power indicator (Figure 13, pos 3) on the battery.

6.1.2 Filling the cleaning solution tank

1. Remove the cap on the tank.
2. Pour in a maximum of 0.79 gal/ 3 L of cleaning fluid.
3. Replace cap and make sure it seals tightly.
4. Put the i-mop® Lite in store position, see section 4.2.
5. Put the tank on the i-mop® Lite with the valve first (Figure 14, pos 1).
6. Press the tank downward to break the valve seal.
7. Push the tank in place, the magnet will lock the solution tank in place.
8. Clean your hands afterwards.

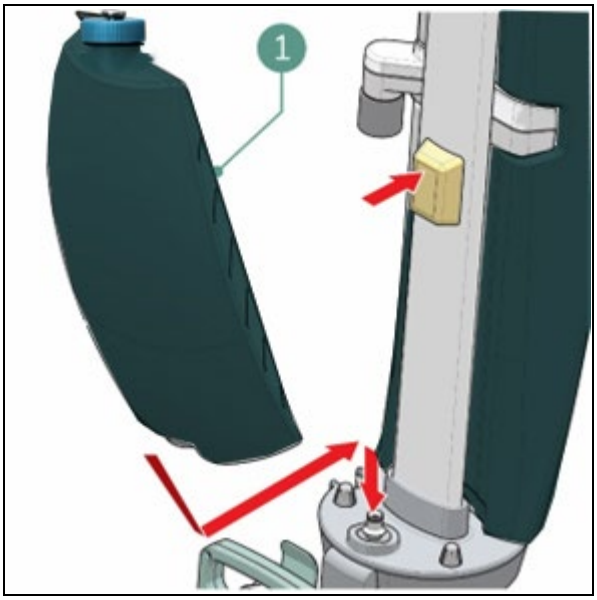

Figure 14

6.2. Operation procedure

6.2.1 Walking to the job site

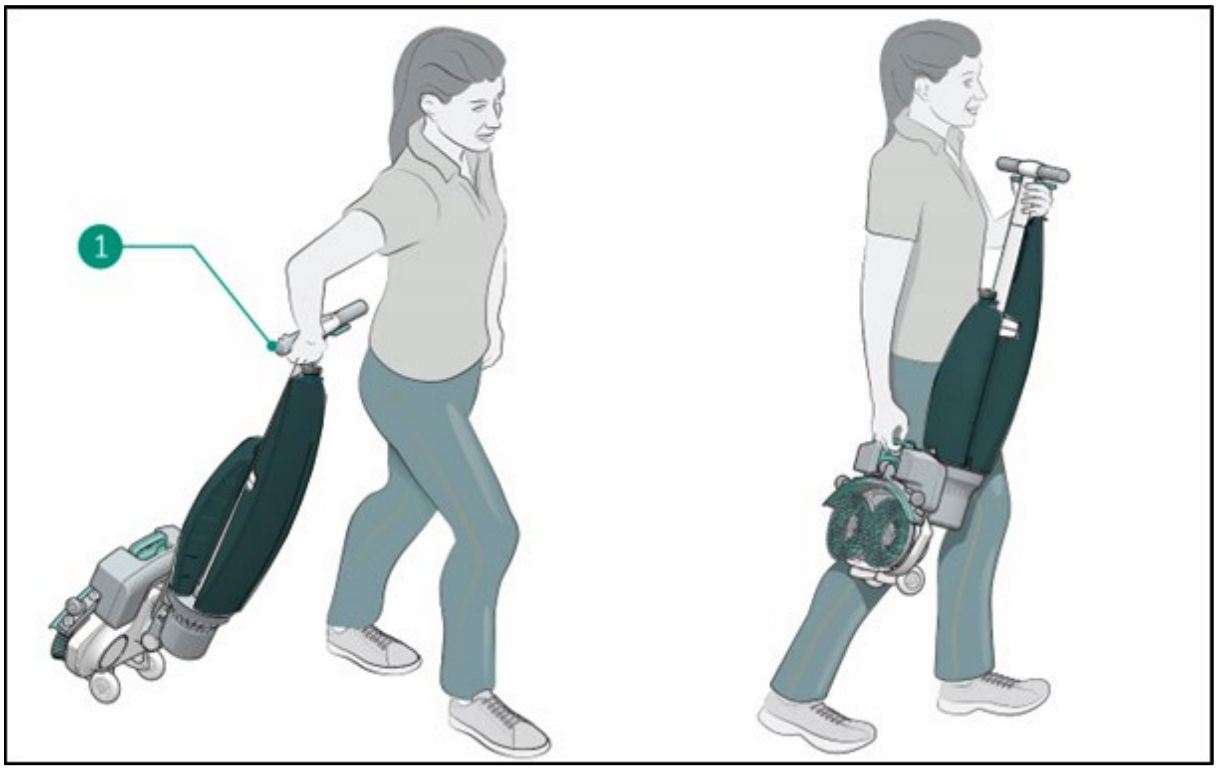

Figure 15

To move the i-mop® Lite from one location to another one in a building:

1. Put the i-mop® Lite in store position, see section 4.2.
2. Hold the handle with one hand (Figure 15, pos 1).
3. Don't forget to bring a wet floor marker.
4. Walk slowly and pay extra attention if you pull the i-mop® Lite over obstacles.
5. To lift the i-mop® Lite over obstacles, always use two hands.

- Hold the handle with one hand.
- Lift the scrub deck with the other hand.

6.2.2 At the job site

1. Mark the job site using a wet floor marker.
2. Crouch down while holding the scrub deck firmly with one hand (Figure 16, pos 2).
3. Push the handle forward with your other hand (Figure 16, pos 1).
4. Bring the scrub deck slowly down to the floor.This will enable power to the machine.

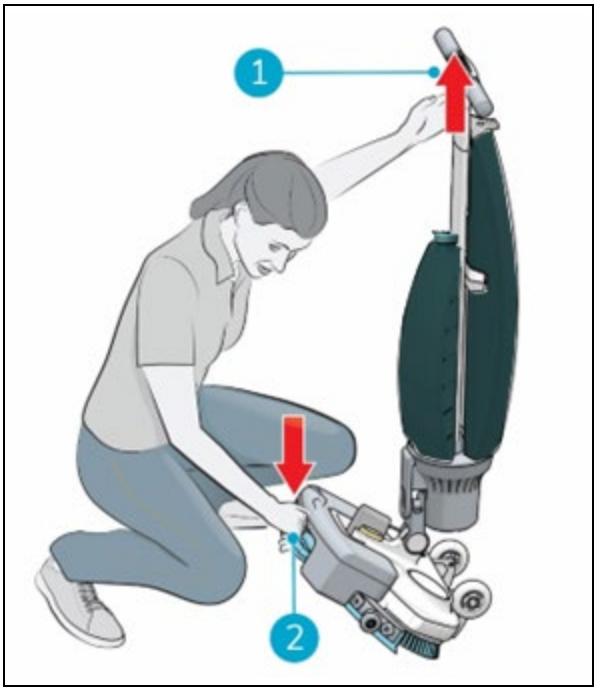

Figure 16

WARNING

Never push down the scrub deck with your foot.

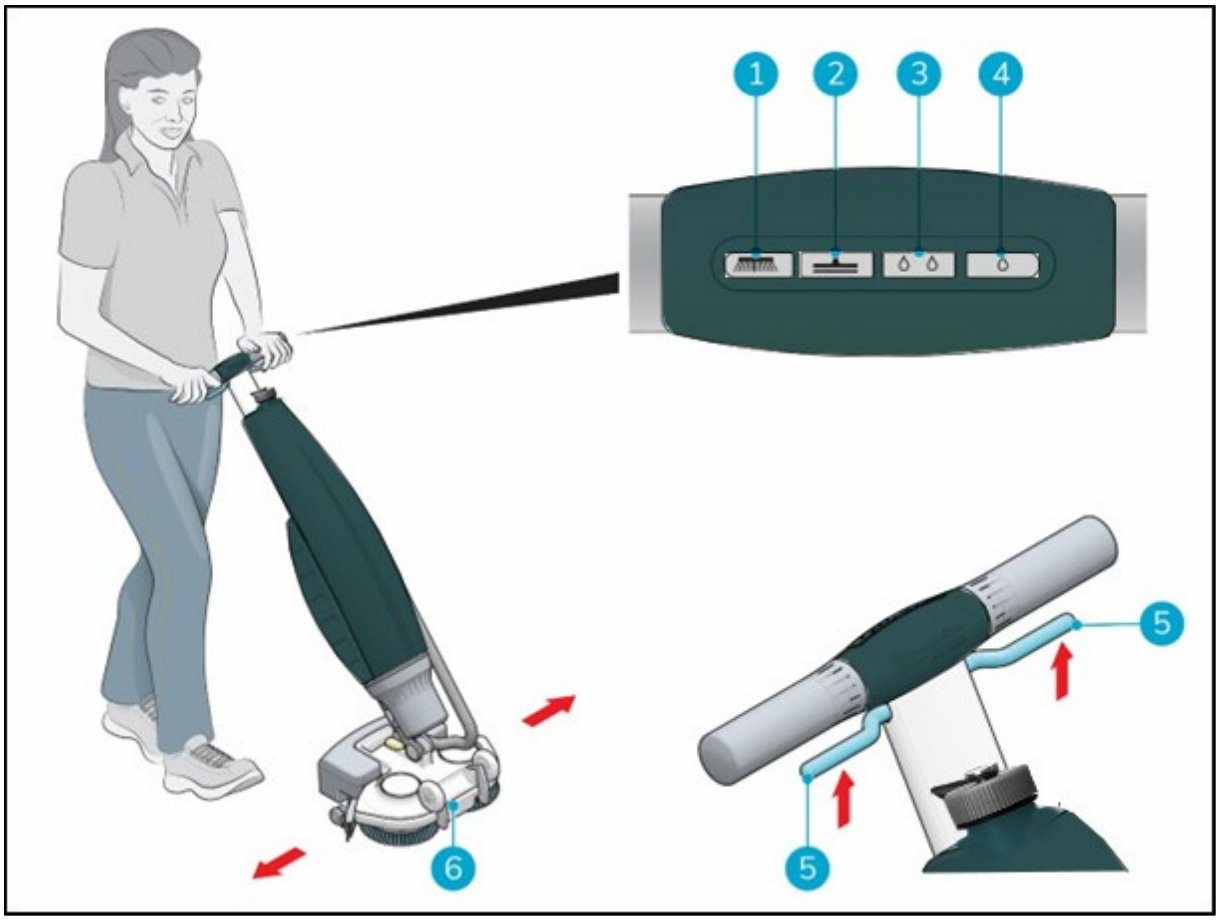

Figure 17

5. Stand behind the i-mop® Lite. Choose your cleaning mode via the buttons on the control panel (Figure 17, pos 1 to 4). You can select the options independently or combined.

Mode	Press
Brush only	
Vacuum only	
Use cleaning solution	
Use Eco mode	
Brush and cleaning solution	
Brush and cleaning solution and vacuum	
Brush and Eco and vacuum	

6. Hold the handle with both hands.
7. Squeeze the trigger on the handle (Figure 17, pos 5). This will also start the i-mop® Lite
8. Once the trigger is squeezed the i-mop® Lite will move forward.
9. Walk behind the i-mop® Lite.
10. Steer by gently turning the handle left or right to move the scrub deck (Figure 17, pos 6).
11. Releasing the trigger (Figure 17, pos 5) will immediately stop the i-mop® Lite. The vacuum motor will stop after 3 seconds.

TIP: Learn to swivel

Operating the i-mop® Lite is very intuitive and like steering a bicycle. The i-mop® Lite is designed to move forward. To turn, stop walking and use your inside hand (the hand in the direction you want to go to) to turn the handle. The i-mop® Lite can swivel 360 degrees making it possible to reverse direction.

WARNING

Do not operate the i-mop® Lite at more than an arm's length. Operating below a 30-degree angle can cause water to run into the vacuum engine.

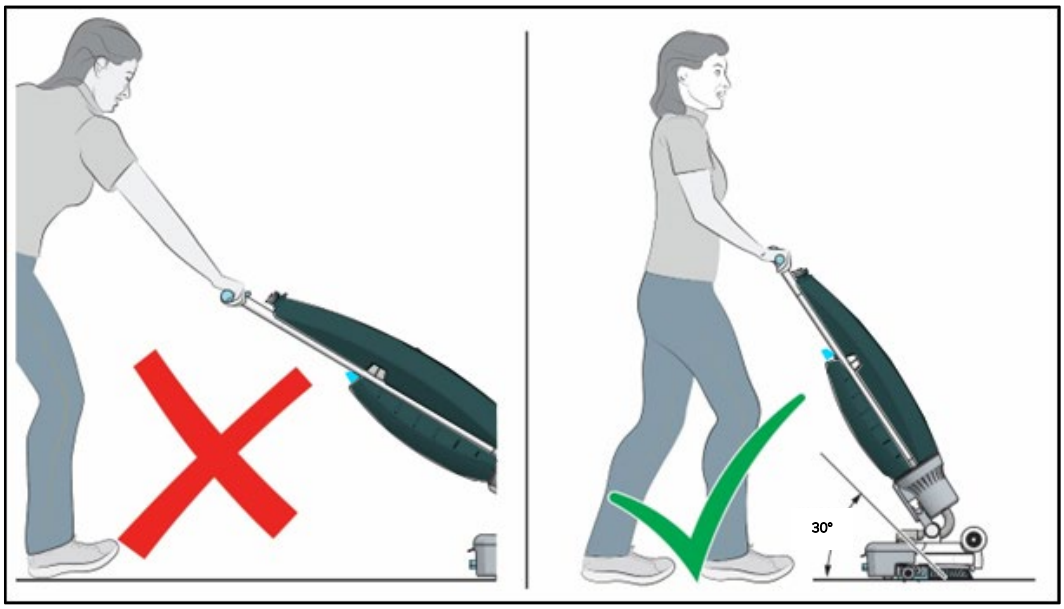

Figure 18

12. Optional you can use the <u>parking and driving support.</u> This parking and driving support will make it possible to park the i-mop® lite in vertical position but it also makes it easy to drive forward with a reduction of weight being forced on the user.

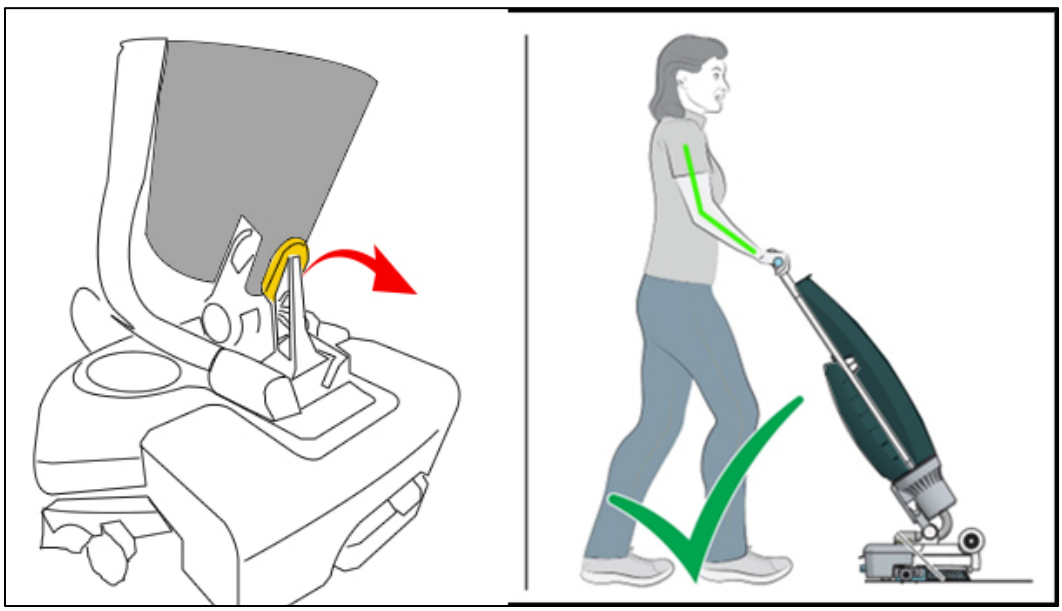

6.2.3 ECO mode

The ECO mode will use 40% less cleaning solution.

1. Turn on the ECO mode by pushing the ECO button (Figure 19, pos 1).
2. Turn off ECO mode by pushing the ECO mode again.
3. To start normal cleaning mode push button (Figure 19,pos2)

Figure 19

6.2.4 Turning off the i-mop® Lite

Releasing the trigger (Figure 20, pos 1) will automatically stop the i-mop® Lite.

Note that the vacuum motor will continue to run for approximately 3 more seconds.

Put the i-mop® Lite in store position, see section 4.2.

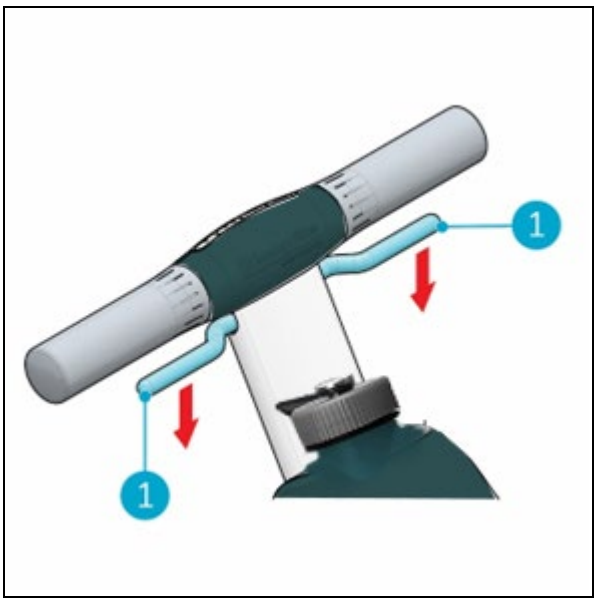

Figure 20

6.2.5 Emptying tanks

Dispose of water or cleaning solution from both tanks in an appropriate drain. Even though the recovery tank is bigger, empty it each time the cleaning solution tank is filled.

WARNING

Please observe the local provisions regarding solution disposal related to wastewater treatment.

6.3. Cleaning and storage

6.3.1 Flushing the system

Be sure to flush the tanks out completely to discard any remaining solution in the lines and valves:

1. Refill the solution tank with 2 to 4 cups / 0.5 to 1 liter of clean water.
2. Press the Brush and Cleaning solution and Vacuum buttons on the control panel.
3. Use the trigger to start the i-mop® Lite and allow it to flush the system.

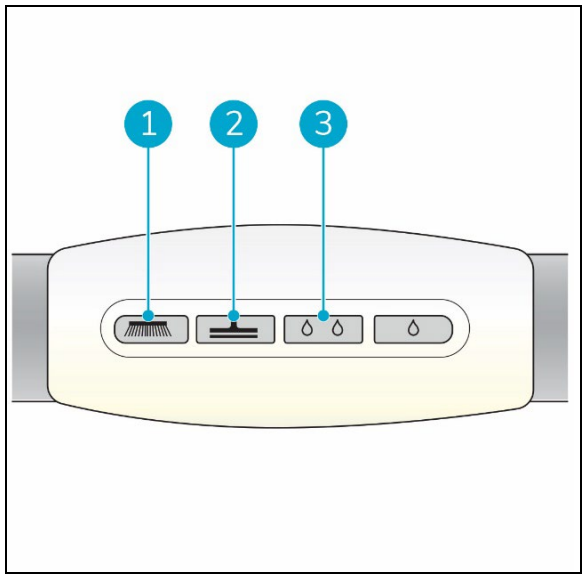

Figure 21

6.3.2 Cleaning the tanks

1. Dispose of water or cleaning solution from both tanks in an appropriate drain.
2. To clean the recovery tank thoroughly:

- Partially fill the tank with fresh water and hold it horizontally with the holes facing up.
- Tilt the tank repeatedly, thoroughly rinsing all the dirt and debris out from the tank.

3. To clean the solution tank, follow the same procedure.

> TIP: Dry the tanks
> Slightly open both tank caps before storage to allow the tanks to dry.

6.3.3 Cleaning the filter

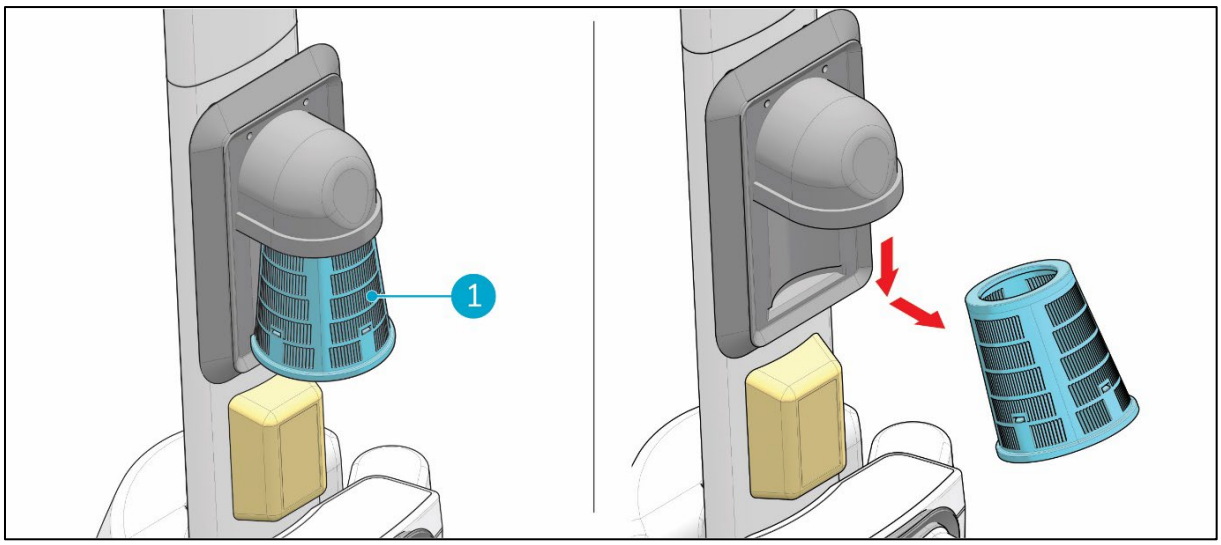

Figure 22

1. Put the i-mop® Lite in store position, see section 4.2.
2. Remove the recovery tank.
3. Release the blue suction filter (Figure 22, pos 1) from beneath the rubber holder by tilting it slightly and pulling it out.
4. Clean the filter.
5. Place the filter back in the rubber holder.
6. Put the recovery tank back on the machine.

6.3.4 Removing the battery

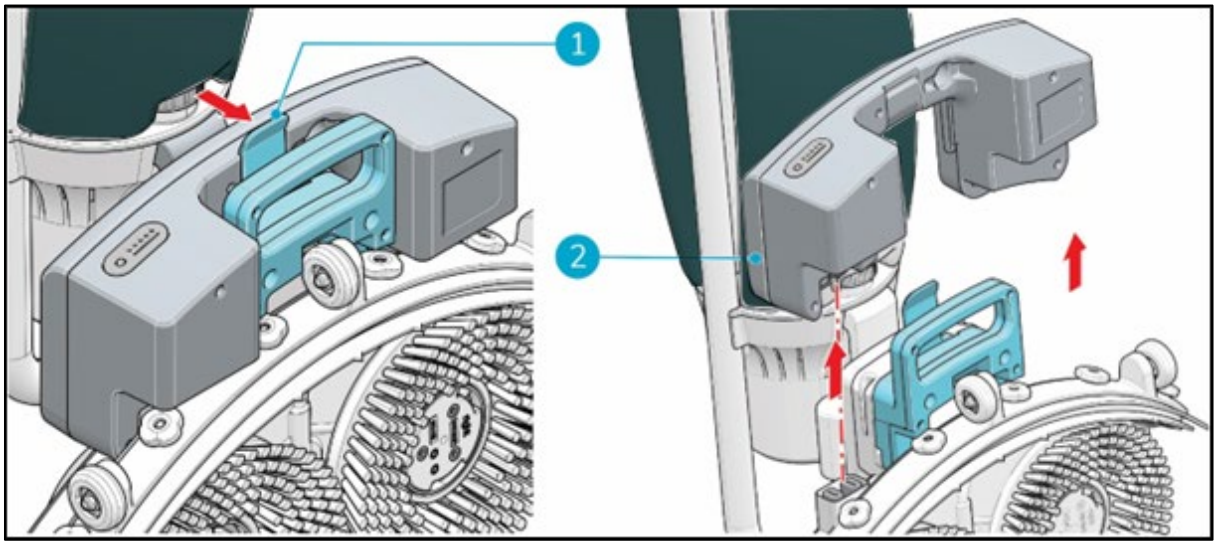

Figure 23

1. Put the i-mop® Lite in store position, see section 4.2.
2. Hold the i-mop® Lite by the scrub deck to stabilize.
3. Press the retaining clip inwards (Figure 23, pos 1)Battery will lift from its anchor, pull the battery away (Figure 23,pos 2).
4. When the i-mop® Lite isn't used regularly, store the charged battery in a dry, clean place.
5. Make sure the battery is charged monthly.

6.3.5 Checking the brushes and squeegee

1. Check to see if both brushes are clean and intact, see section 7.1 for removal instructions.

- Clean them under fresh water or replace them if necessary.
- Replace brushes if the yellow wear indicator is the same height as other bristles.

2. Check to see if the squeegee is clean and intact, see section 7.2 for removal instructions.

- Clean it with fresh water and wipe it with a clean, damp cloth.
- Replace the squeegee blades when necessary.

6.3.6 Store in an upright position

1. Please ensure that the i-mop® Lite is stored in a place where nobody can bump into it.
2. Put the i-mop® Lite in store position, see section 4.2.
3. Store the i-mop® Lite close to a wall (Figure 24, pos 1) with the handle pointing towards the wall and the brushes facing away from the wall.

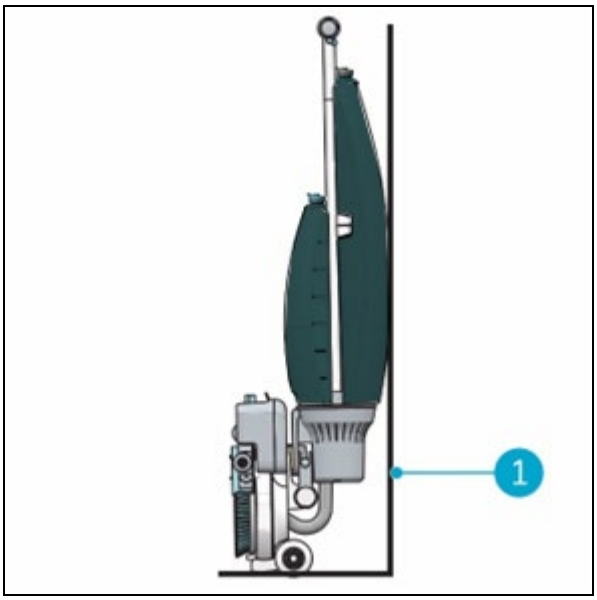

Figure 24

7. Maintenance

CAUTION
Remove the battery before executing any cleaning or maintenance task.

CAUTION
Always keep the body of the i-mop® Lite in an upright position when replacing the brushes or the squeegee.

7.1. Brush replacement

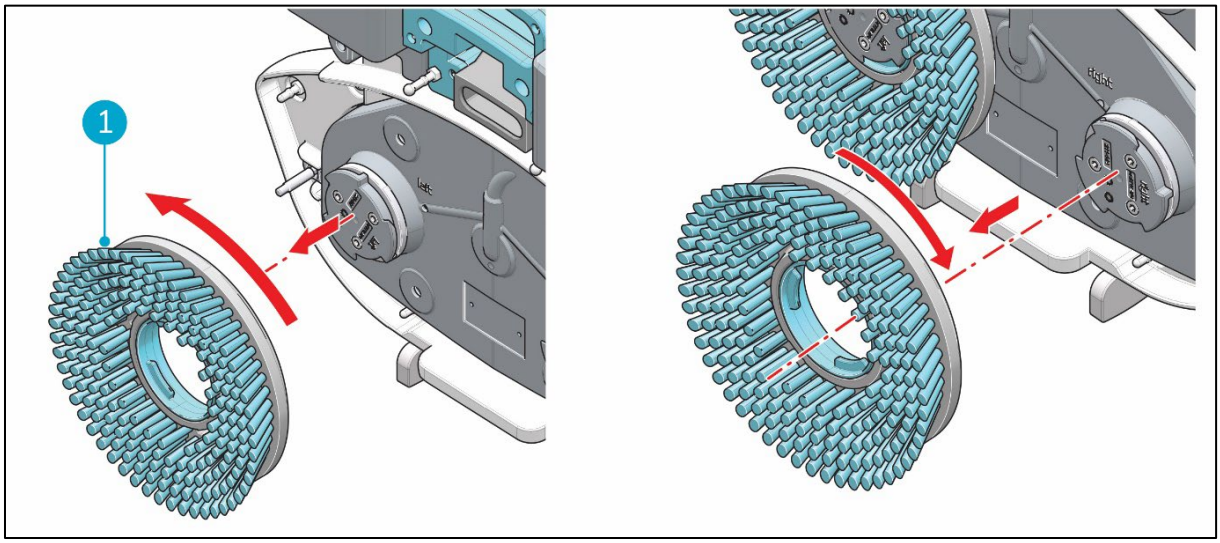

Figure 25

The brushes are attached to the scrub deck with a bayonet fitting.

1. Put the i-mop® Lite in store position, see section 4.2.
2. Hold the scrub deck firmly with one hand.
3. Using your other hand to turn the left brush (Figure 25, pos 1) anticlockwise until you feel resistance or see the motor disk turning as well.
4. Pull the brush towards you, off the motor disk.
5. Turn the right brush clockwise until you feel resistance or see the motor disk turning as well.
6. Pull the brush towards you, off the motor disk.
7. Visually inspect the motor disks.
8. Clean the i-mop® Lite scrub deck with a clean, dry cloth before you install the brushes.

7.2. Squeegee replacement

The squeegee blades come in pairs and wear out over time. When you notice the floor is no longer being dried properly, replace the squeegee blades.

7.2.1 Detaching the squeegee

1. Put the i-mop® Lite in store position, see section 4.2.
2. Hold the scrub deck firmly with one hand.
3. Pull on the left side of the squeegee (Figure 26, pos 1) to remove it.
4. Pull on the right side of the squeegee to remove it.
5. Remove the vacuum hose from the squeegee by twisting the hose.

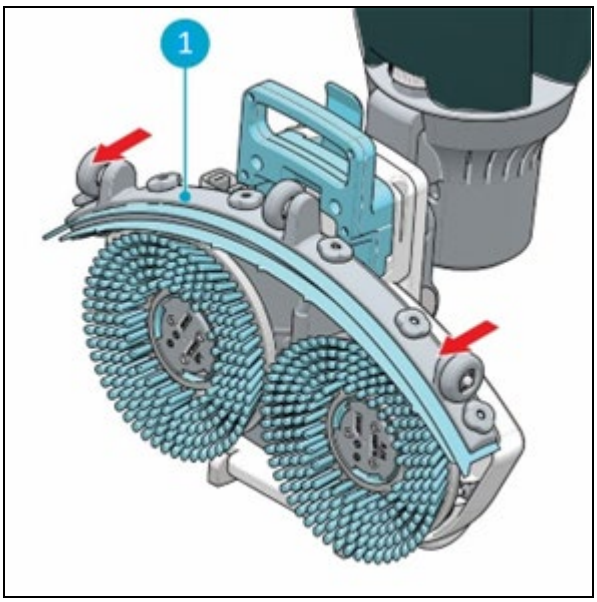

Figure 26

7.2.2 Flipping/replacing the squeegee blade

1. Unscrew the 6 plastic nuts on the back.
2. Take off the squeegee rear plate.
3. Once the plastic part is removed, you can easily take off the rear rubber blade.
4. Push the 6 screws through the front blade in order to remove the squeegee front plate.
5. Take off the rear rubber blade.
6. Inspect the front and rear rubber blades:

- The first time: flip the blades so the top of the blade is now facing the floor. Push the front plate screws through the holes.
- The second time: attach a new set of blades. Push the front plate screws through the holes.

> **CAUTION**
> The special squeegee blades that contain small arrow-like shapes cannot be switched. These need to be replaced every time.

7. Put back the plastic rear plate.
8. Screw the 6 plastic nuts on the back.

7.2.3 Attaching the squeegee

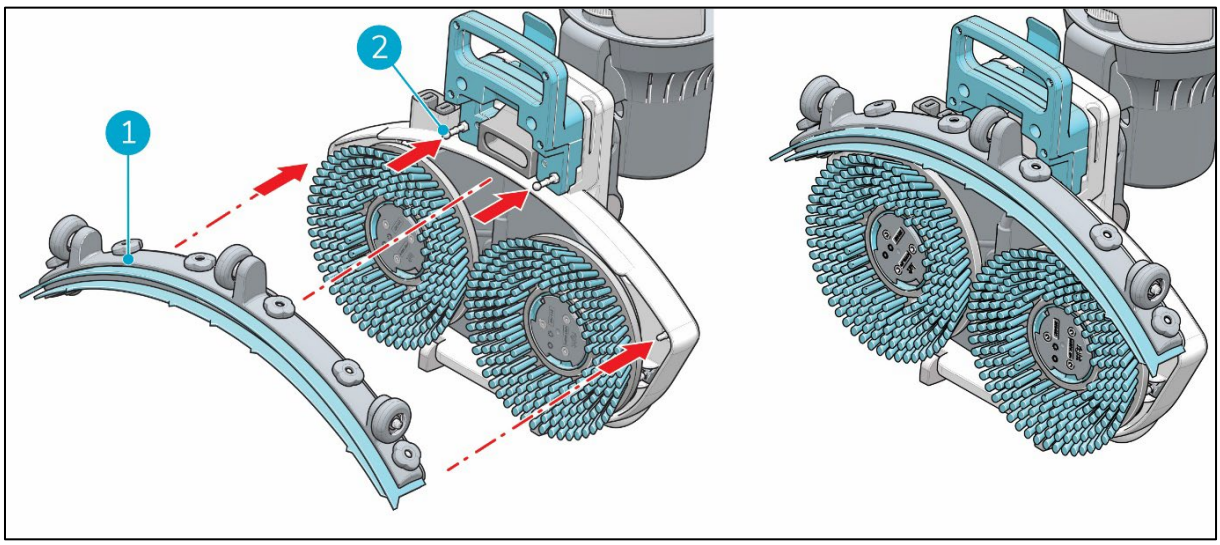

Figure 27

To attach the squeegee:

1. Hold the scrub deck firmly with one hand.
2. Align the pins on the scrub deck (Figure 27, pos 2) with the holes on the squeegee (Figure 27, pos 1).
3. Push the left side of the squeegee in place.
4. Push the right side of the squeegee in place.

7.3. Recommended additional cleaning

Clean the exterior of the i-mop® Lite weekly with a non-abrasive, non-solvent cleaner or a clean, damp cloth. To clean the scrub deck, remove the brushes.

7.4. Recommended service time

Service must be done by one of our service partners. The first service is recommended after 200 hours. It is recommended to schedule a full service every 500 hours.

7.5. Accessories

The i-mop® Lite can be equipped with different brushes and polishing pads. The use of these accessories is only allowed by experienced and trained operators as some polishing pads can be abrasive and can cause damage to the floor surface when applied incorrectly. For more information please contact our sales department, or the partner who provided the i-mop® Lite.

8. Troubleshooting

Problem	Cause	Solution
No power	No battery	Insert battery
	Empty battery	Charge battery
	Battery incorrectly placed	Remove and reinstall battery
Insufficient/no water flow	Wrong program	Check the operating mode on the control panel
	Eco mode on	Check the ECO mode light on the control panel
	Empty tank	Fill the tank
	Tank incorrectly placed	The tank valve must be clicked on the nipple to open the seal, replace the tank
	Filter blocked	Ensure the solution tank has no dirt particles and the filter is clean
	Blocked water pipe	Request for service
Poor water recovery	Squeegee opening blocked	Remove the pipe and clean the squeegee opening
	Tears in squeegee blades	Replace squeegee blades
	Filter blocked	Check the yellow filter and clean if necessary
	Vacuum hose blocked	Check and remove blockage
	Vacuum pump not running	Request for service
Leakage	Tanks incorrectly placed	Check and reattach fluid tanks
	Tear in vacuum hose	Replace vacuum hose or request for service
Battery not charging	Battery is at end of life	Replace battery
Charger not charging		Request service

9. Decommissioning and disposal

ATTENTION
It is the responsibility of the i-mop® Lite owner to dispose of the product responsibly.

After decommissioning, the i-mop® Lite still contains valuable resources and needs to be disposed of according to your local laws and regulations regarding recycling of electrical equipment.

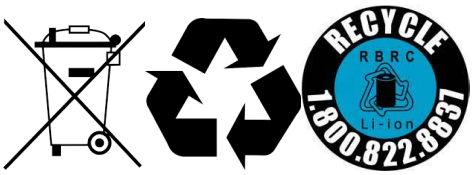

Before disposal please:

1. Flush the machine, see section 6.3.1.
2. Remove the battery for separate disposal, see section 6.3.4.
3. Remove all loose components like brushes, tanks and squeegee.
4. Dispose all items according to your local laws and regulations.

10. Parts

P/n	Description
1263272	BATTERY
1263273	BATTERY CHARGER (N. America)
1267985	BATTERY CHARGER (Europe)
1267986	BATTERY CHARGER (Brazil)
1263464	PRIMOTHANE AIROFLEX FRONT SQUEEGEE (QTY 1)
1263465	PRIMOTHANE REAR SQUEEGEE (QTY 1)
1263466	LINATEX FRONT SQUEEGEE, STANDARD (QTY 1)
1263467	LINATEX REAR SQUEEGEE, STANDARD (QTY 1)
1264738	SQUEEGEE ASSEMBLY COMPLETE
1263469	SPLASH GUARD SET (QTY 1 SET)
1263461	HARD RED BRUSH (QTY 2)
1263462	MED BLUE BRUSH, STANDARD (QTY 2)
1263463	SOFT LIGHT BLUE BRUSH (QTY 2)
1263460	PAD DRIVER (QTY 2)
1263455 (Qty 2) 1263475 (Qty 10)	AGGRESSIVE SCRUBBING BLACK PADS
1263456 (Qty 2) 1263476 (Qty 10)	REGULAR BUFFING RED PADS
1263457 (Qty 2) 1263477 (Qty 10)	LIGHT BUFFING & POLISHING WHITE PADS
1263458 (Qty 2) 1263478 (Qty 10)	AGGRESSIVE SCRUBBING GLOSS FLOORS GREEN PADS
1263459 (Qty 2) 1263479 (Qty 10)	HEAVY CLEANING BLUE PADS
1263470	SOLUTION TANK ASSEMBLY, STANDARD (QTY 1)
1263471	RECOVERY TANK ASSEMBLY, STANDARD (QTY 1)
1264744	BALL FLOAT ASSEMBLY

Tennant Company

10400 Clean Street, Eden, Prairie, MN 55344-2650

Telephone: (800) 553-8033

Internet: www.tennantco.com

Tennant N.V.

Industrielaan 6 5405 AB

P.O. Box 6 5400 AA, Uden -The Netherlands

Internet: Europe@tennantco.com

Model: i-mop® Lite