S20
(Diesel)

Sweeper Parts Manual

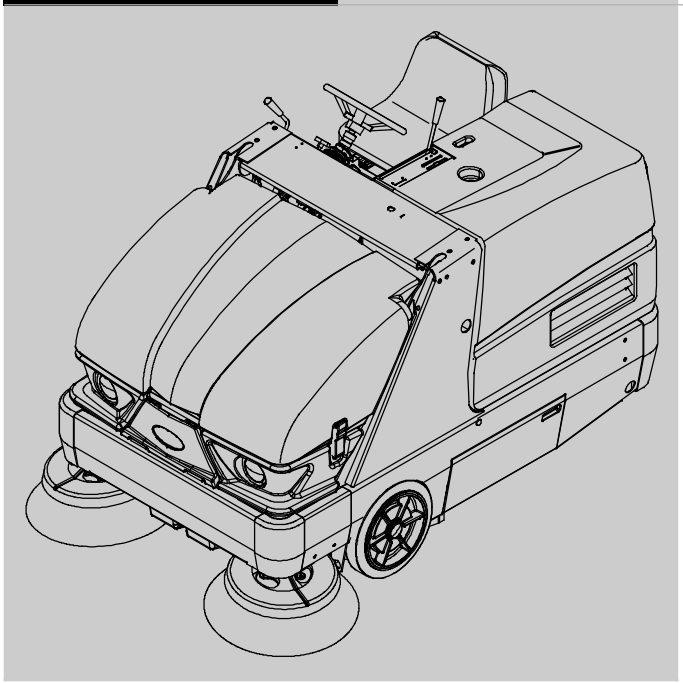

SweepMax ™ System
ShakeMax ™ 360
Tennant*True*® *Parts*
IRIS® a Tennant Technology

North America / International

For latest parts manual or other
Operator language manual, visit:

www.tennantco.com/manuals

9006716
Rev. 15 (1-2022)

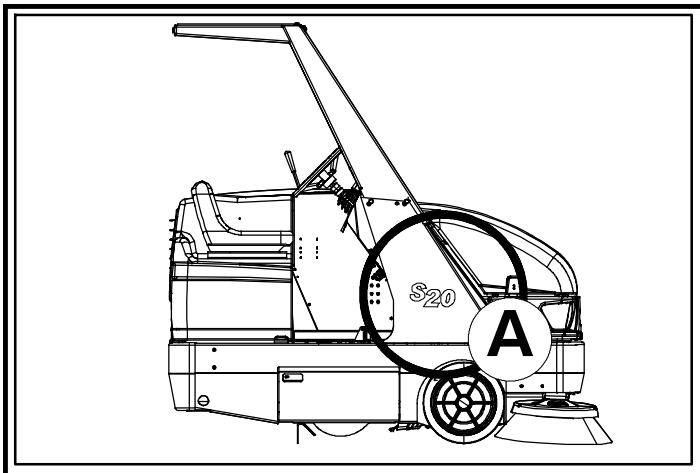

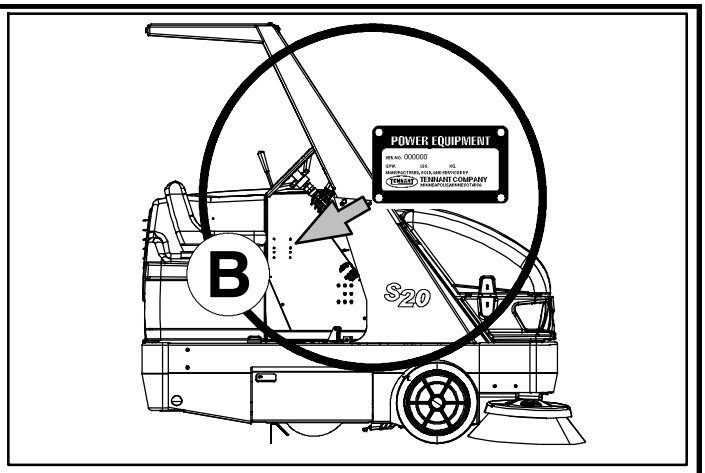

Ref	Part No.	Serial Number	Description	Qty.
1	82681	(000000-)	Bracket Wldt, Lpg Mount	1
▽ 2	63810	(000000-)	Latch Assy, Lpg Tank Mtg, W/Nut	4
▲ 3	51839	(000000)	Nut Adjustable, Lpg Tank Mtg	2
4	49263	(000000-)	Tie, Cable	3
5	82556	(000000- 001039)	Bracket, Vaporizer	1
6	54930	(000000)	Vaporizer, LPG	1

D

C

EN

HOW TO ORDER PARTS - See diagram above

Only use TENNANT Company supplied or equivalent parts. Parts and supplies may be ordered online, by phone, by fax or by mail.

Follow the steps below to ensure prompt delivery.

1. **(A)** Identify the machine model.
2. **(B)** Identify the machine serial number from the data plate.
3. **(C)** Ensure the proper serial number is used from the parts list.
4. Identify the part number and quantity. Do not order by page or reference numbers.
5. Provide your name, company name, customer ID number, billing and shipping address, phone number and purchase order number.
6. Provide detail shipping instructions.

(D) ▽ - Identifies an assembly
▲ - Identifies parts included in assembly

Please fill out at time of installation for future reference.

Model No. - _____

Serial No. - _____

Machine Options - _____

Sales Rep. - _____

Sales Rep. phone no. - _____

Customer ID Number - _____

Installation Date - _____

Tennant Company
10400 Clean Street
Eden Prairie, MN 55344-2650
Phone: (800) 553-8033 or (763) 513-2850
www.tennantco.com

Thermo-Sentry, Perma-Filter, InstantAccess, Lower total Cost of Ownership, and Duramer are trademarks of Tennant Company.

Specifications and parts are subject to change without notice.

Original instructions, Copyright © 2009 - 2020, 2022 TENNANT Company, Printed in U.S.A.

CN

如何订购部件 – 参见下表

仅使用 TENNANT 公司提供的或同等部件。部件和供应可以在线订购，通过电话、传真或邮件订购。
请遵循下面的步骤确保及时交付。

1. (A) 确定机器型号。
2. (B) 从数据标签确定机器序列号。
3. (C) 确保使用部件列表中的正确序列号。
4. 确定部件号和数量。
   不要按页面或参考编号订购。
5. 提供您的姓名、公司名称、客户 ID 号、付帐和送货地址、
   电话号码和采购单编号。
6. 提供详细的送货说明。

(D) ▽ – 确定组件
▲ – 确定组件中包含的组件

请在安装时填写供未来参考。

型号 – _____

序列号 – _____

机器选项 – _____

销售代表– _____

销售代表电话号码 – _____

客户 ID 编号 – _____

安装日期 – _____

ES

CÓMO SOLICITAR PIEZAS - Consulte el diagrama anterior.

Utilice sólo las piezas suministradas por TENNANT Company o piezas equivalentes. Puede solicitar las piezas a través de internet, por teléfono, por fax o por correo.

Siga los siguientes pasos para que la entrega sea rápida.

1. **(A)** Indique el modelo de máquina.
2. **(B)** Indique el número de serie de la etiqueta de datos.
3. **(C)** Asegúrese de que indica el número de serie correcto de la lista de piezas.
4. Indique la cantidad y el número de la pieza.
   No realice el pedidoindicando el número de página o el de referencia.
5. Incluya su nombre, el nombre de la empresa, el ID de cliente,
   las direcciones de envío y facturación, el número de teléfono y el número del pedido de compra.
6. Facilite instrucciones de envío.

(D) ▽ - identifica un conjunto
▲ - identifica piezas de un conjunto

Rellene estos datos cuando realice la instalación para utilizarlos como referencia en el futuro.

Nº modelo - _____

Nº serie - _____

Opciones de la máquina - _____

Vendedor - _____

Nº teléfono vendedor - _____

Nº cliente - _____

Fecha de instalación - _____

FR

COMMENT COMMANDER DES PIÈCES DÉTACHÉES - Voir le schéma ci- dessus.

Utilisez uniquement des pièces fournies par la société TENNANT ou équivalentes. Les pièces et fournitures peuvent être commandées en ligne, par téléphone, fax, ou par courrier.

Suivez les étapes ci- dessous pour assurer une livraison rapide.

1. **(A)** Identifiez le modèle de la machine.
2. **(B)** Identifiez le numéro de série de la machine, à partir de l'étiquette signalétique.
3. **(C)** Assurez- vous que le numéro de série correct est utilisé à partir de la liste de pièces détachées.
4. Identifiez le numéro de pièce et la quantité. Ne commandez pas par page ou numéros de référence.
5. Fournissez votre nom, le nom de votre société, votre numéro d'identification de client, l'adresse de facturation et d'expédition, le numéro de téléphone et le numéro du bon de commande.
6. Fournissez des instructions d'expédition détaillées.

(D) ▽ - identifie un assemblage
▲ - identifie les pièces composant l'assemblage

A remplir au moment de l'installation à titre de référence.

Nº du modèle - _____

Nº de série - _____

Options de la machine - _____

Agent commercial - _____

Nº tél. de l'agent commercial - _____

Numéro d'identification client - _____

Date d'installation - _____

JP

パーツの発注方法 ?上記の図を参照してください

TENNANT社製のパーツまたは同等品のみをお使いください。
パーツやサプライ品のご注文は、オンライン、電話、FAX、または手紙でお願いいたします。
確実にお届けできるように、以下の情報お知らせください。

1. (A) 製品のモデル名をお知らせください。
2. (B) 製品のデータラベルに印刷されているシリアル番号
   をお知らせください。
3. (C) パーツリストを参照して、シリアル番号が正しいかご確認
   ください。
4. パーツ番号と数量をお知らせください。マニュアル/カタログの
   ページ番号や参照番号でのご注文はご遠慮ください。
5. お客様のお名前、会社名、顧客ID番号、請求/発送先住所、
   電話番号、注文書番号をお知らせください。
6. 発送に関するご希望があれば、明記してください。

(D) ▽ – アセンブリを示します
▲ – アセンブリに含まれるパーツを示します

後日確認できるように、設置時に記入してください。

モデルNo. – _____

シリアルNo. – _____

製品のオプション– _____

販売代理店 – _____

販売代理店の電話番号 – _____

顧客ID番号 – _____

設置日 – _____

D, NA

General Recommended Maintenance Items

	Ref.	Part No.	Serial Number	Description	Qty.
▽		9006387	(000000-)	Maint Kit, 400hr [S20 Dsl, Kubo]	1
▲		9005007	(000000-)	Element, Fltr, Oil, Spin- On [Ku]	1
▲		1017126	(000000-)	Element, Fltr, Fuel [Dn]	1
▲		368082	(000000-)	Belt, V, 9.5mm 37.4l [Ku]	1
▲		382493	(000000-)	Element, Fltr, Air	1
▲		1049908	(000000-)	Belt, V, 37.5l [3v, 3vx]	1
▽		9006391	(000000-)	Maint Kit, 800hr [S20 Dsl, Kubo]	1
▲		9005007	(000000-)	Element, Fltr, Oil, Spin- On [Ku]	1
▲		382493	(000000-)	Element, Fltr, Air	1
▲		1017126	(000000-)	Element, Fltr, Fuel [Dn]	1
▲		65221	(000000-)	Element, Fltr, Hyd Oil	1
▲		9006534	(000000-)	Cap, Breather, Hyd	1
▲		361023	(000000-)	Strainer, Hyd, 010gpm 100mesh	1
▲		1057710	(000000-)	Oil, Hyd [El, Iso 100, 01Gal]	5
▲		1045900	(000000-)	Filter, Cyl, 11.09d, 13.31l, 6.724 Id	1
▲		1044356	(000000-)	Gasket, Cover	1
▲		360134	(000000-)	Seal	1
▲		360136	(000000-)	Flap, Recirculation	1
▲		360761	(000000-)	Seal	1
▲		360784	(000000-)	Seal	1
▲		1047575	(000000-)	Skirt, Neo, .12 2ply, Dust- Cntrl	1
▲		360603	(000000-)	Seal, Rbr, .13 6.34w 36.3l, 12/.28h, Red	1
▲		87689	(000000-)	Cord, Sponge, Neo, 1.0d 36.3l	1
▲		360844	(000000-)	Seal, Door, Dump, Side	2
▲		360327	(000000-)	Skirt, Neo, .12, 05.20w 36.10l, 06/ Sl	1
▲		360336	(000000-)	Seal	1
▲		87181	(000000-)	Seal, Hppr, .06 12.5w 36.6l Neo	1
▲		1057602	(000000-)	Skirt, Neo, .12, 12.26w 14.50l, 07/ Sl	2
▲		40870- 8	(000000-)	Hose, Flex, Vacuum, 04.0d, 050.0l	1
▲		361153	(000000-)	Hose, Flex, Vacuum, 04.0d, 010.5l 4x2end	1
▲		1049908	(000000-)	Belt, V, 37.5l [3v, 3vx]	1
▲		1044357	(000000-)	Seal, Inlet, Vacuum	1
▲		368082	(000000-)	Belt, V, 9.5mm 37.4l [Ku]	1
		16411	(000000-)	Paint, Airdry, Off- White, 12oz	1
		16412	(000000-)	Paint, Airdry, Teal, 12oz, Solid	1
		377540	(000000-)	Paint, Airdry, Blk, 12oz	1
		377538	(000000-)	Paint, Airdry, Gray, 12oz [Enamel]	1
		377537	(000000-)	Paint, Airdry, Iron Gray,12oz[Pwdr Coat]	1

SECTION 2

Contents **Page**

Fig. 1 - Brushes, Replacement 2- 2
Fig. 2 - Main Frame and Skirts Group 2- 4
Fig. 3 - Brush Door Group, Right Side 2- 6
Fig. 4 - Brush Door Group, Left Side 2- 8
Fig. 5 - Seat and Cover Group (000000- 003440) 2- 10
Fig. 6 - Seat and Cover Group (003441-) 2- 12
Fig. 7 - Rear Cover Latch Group (000000- 002464) 2- 14
Fig. 8 - Rear Cover Latch Group (002465-) 2- 16
Fig. 9 - Operator Station Group 2- 18
Fig. 10 - Steering Wheel Group 2- 20
Fig. 11 - Engine and Mount Group 2- 22
Fig. 12 - Engine Flywheel Housing and Mount Group 2- 24
Fig. 13 - Engine Air Cleaner Group 2- 26
Fig. 14 - Engine Radiator Group 2- 28
Fig. 15 - Engine Fuel Tank Group 2- 30
Fig. 16 - Engine Muffler Group 2- 32
Fig. 17 - Engine Battery Group 2- 34
Fig. 18 - Directional Pedal Group 2- 36
Fig. 19 - Wheel and Brake Group, Front 2- 38
Fig. 20 - Wheel Group, Rear Drive 2- 40
Fig. 21 - Brush Lift Group, Main 2- 42
Fig. 22 - Brush Drive Group, Main 2- 44
Fig. 23 - Brush Lift Group, Side 2- 46
Fig. 24 - Brush Motor and Pivot Group, Side . . 2- 48
Fig. 25 - Vacuum Fan Control Group 2- 50
Fig. 26 - Vacuum Fan Group 2- 52
Fig. 27 - Hopper Lift Arms Group 2- 54
Fig. 28 - Hopper Lift Cylinder Group 2- 56
Fig. 29 - Hopper Group, Plastic 2- 58
Fig. 30 - Hopper Group, Steel 2- 60
Fig. 31 - Hopper Cover Group 2- 62
Fig. 32 - Hopper Support Group (001071-) 2- 64
Fig. 33 - Hopper Dump Door Group 2- 66
Fig. 34 - Hopper Filter Shaker Tray Group 2- 68
Fig. 35 - Hopper Filter Shaker Cover Group . . 2- 70
Fig. 36 - Hydraulic Pump Linkage Group 2- 72
Fig. 37 - Hydraulic Schematic 2- 74
Fig. 38 - Hydraulic Hose Group (000000- 002999) 2- 76
Fig. 39 - Hydraulic Hose Group (003000-) 2- 78
Fig. 40 - Hydraulic Pumps Group 2- 80
Fig. 41 - Hydraulic Reservoir Group 2- 82
Fig. 42 - Hydraulic Control Valve Group 2- 84
Fig. 43 - Hydraulic Solenoid Valve Group 2- 86
Fig. 44 - Electrical Schematic 2- 88
Fig. 45 - Electrical Wire Harnesses Group 2- 94
Fig. 46 - Label Group 2- 98

Fig. 1 - Brushes, Replacement

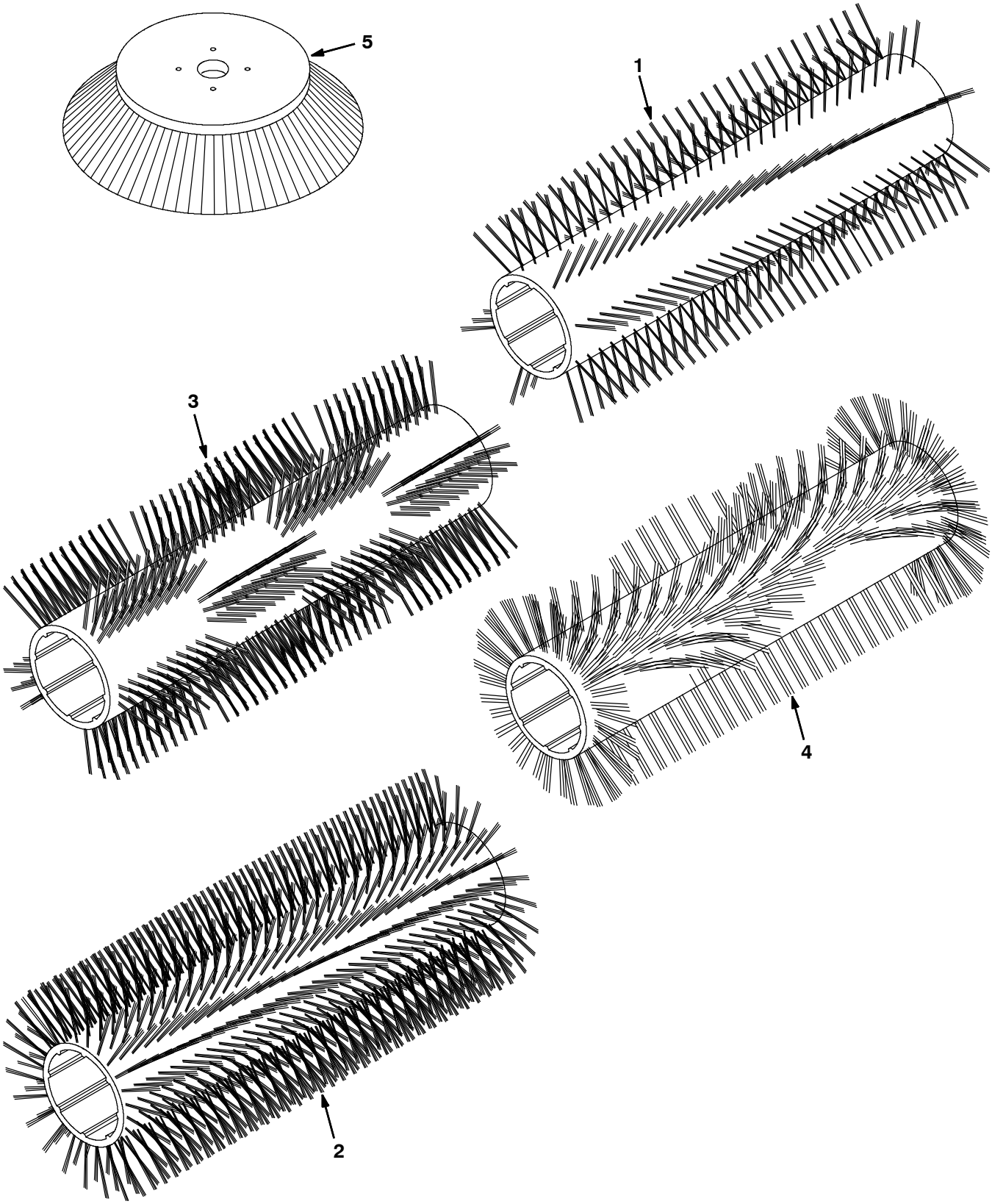

355043 - NA

Fig. 1 - Brushes, Replacement

Ref.	Part No.	Serial Number	Description	Qty.
1	87334	(000000-)	Brush- Sweep, Polyester 8 Dr, Spiral	1
1	87099	(000000-)	Brush- Sweep, Polypropylene, Spiral	1
1	1254686	(000000-)	Brush- Sweep, Polypropylene and Wire, Spiral [Bronze]	1
1	385947	(000000-)	Brush- Sweep, Natural Fiber, Spiral	1
2	87333	(000000-)	Brush- Sweep, Polyester 24 Dr, Spiral	1
3	370010	(000000-)	Brush- Sweep, Window, Polypropylene, Spiral	1
4	370025	(000000-)	Brush- Sweep, Wedge, Polypropylene, Spiral	1
5	08013N	(000000-)	Brush- Side Swp, Soft Nylon	1
5	59431	(000000-)	Brush- Side Swp, Polypropylene	1
5	59432	(000000-)	Brush- Side Swp, Flatwire	1

Fig. 2 - Main Frame and Skirts Group

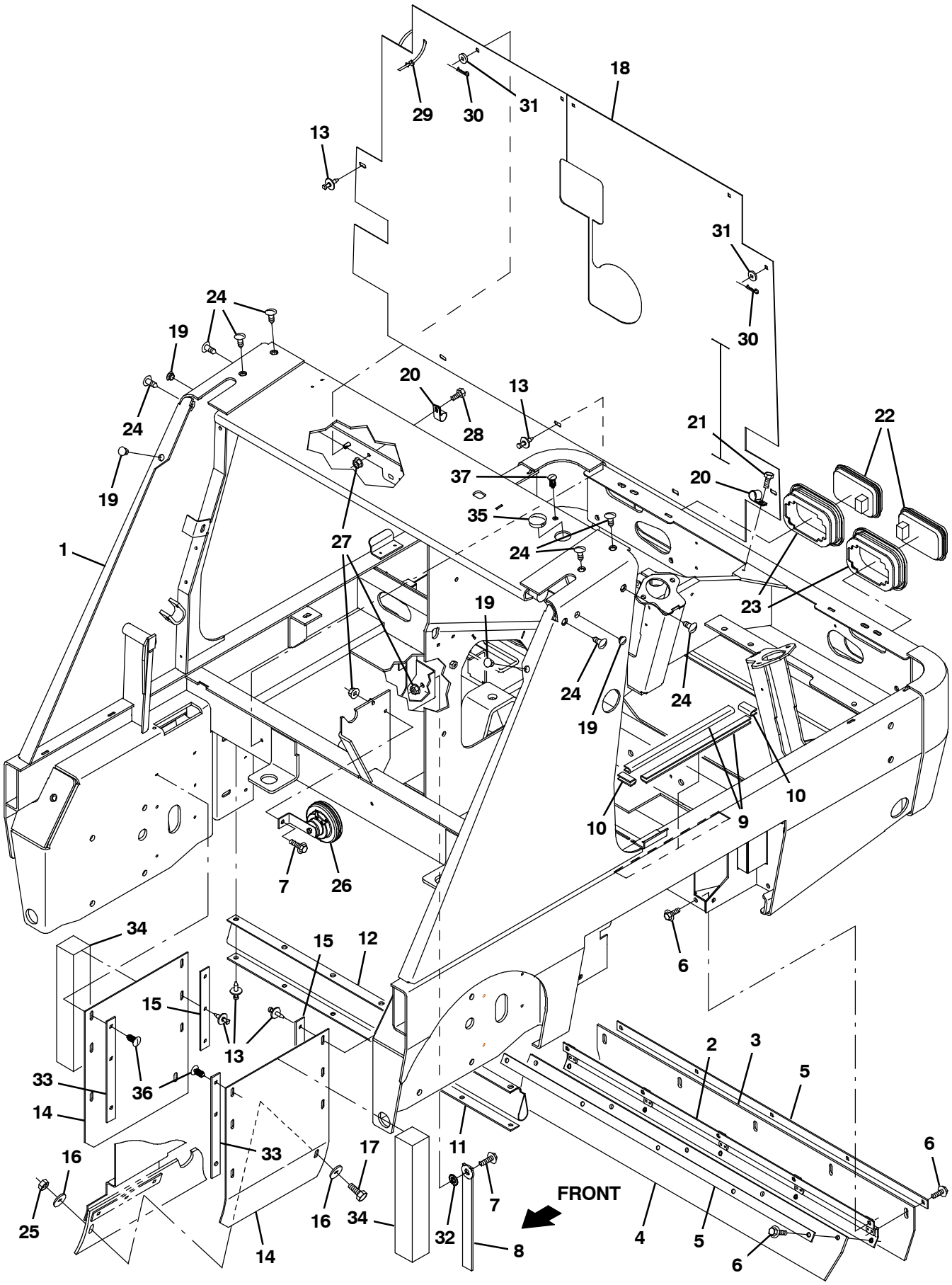

354936 - IC, NA

Fig. 2 - Main Frame and Skirts Group

Ref.	Part No.	Serial Number	Description	Qty.
1	1044372	(000000-)	Frame Wldt, Main, Gas/Lpg/Dsl	1
2	360138	(000000-)	Channel, Recirculation Flap	1
3	360134	(000000-)	Seal	1
4	360136	(000000-)	Flap, Recirculation	1
5	360137	(000000-)	Strip, Retainer, Flap	2
6	1037346	(000000-)	Screw, Hex, M8 X 1.25 X 25, 9.8, Sems	15
7	1037354	(000000-)	Screw, Hex, M8 X 1.25 X 30, 9.8, Sems	2
8	71579	(000000-)	Strap, Static, W/Grommet, .19 1.1w 25.0l	1
9	57564	(000000-)	Molding, Trim, Pvc, .08- .11 05.0l	2
10	361160	(000000-)	Molding, Trim, Pvc, .08- .11 01.0l	2
11	87180	(000000-)	Retainer, Seal, Hppr, Top	1
12	87181	(000000-)	Seal, Hppr, .06 12.5w 36.6l Neo	1
13	72968	(000000-)	Rivet, Plstc, .250d X 0.90	25
14	1057602	(000000-)	Skirt, Neo, .12, 12.26w 14.50l, 07/ Sl	2
15	360781	(000000-)	Retainer, Skirt, .12, 1.0w X 08.1l, Pl	2
16	30013	(000000-)	Washer, Flat, 0.31, Fendr	2
17	09740	(000000-)	Screw, Hex, M8 X 1.25 X 20, Ss	1
18	1051250	(000000-)	Seal, Firewall	1
19	02431	(000000-)	Plug, Hole, Rnd, 0.56h .03- .12, Blk Nyl	4
20	67767	(000000-)	Clamp, Cable, Stl, 0.69d X 0.62w, 1hole	3
21	74455	(000000-)	Screw, Hex, M6 X 1.00 X 12, Fmg	2
22	1054620	(000000-)	Taillight, Led, 13.5v, 5.3 X 3.4	2
23	1054619	(000000-)	Grommet, Taillight, 5.44 X 3.56	2
24	1055605	(000000-)	Plug, Hole, Rnd, 0.38h .4- .7, Blk Nyl	8
25	08709	(000000-)	Nut, Hex, Lock, M8 X 1.25, Nl	1
26	369704	(000000-)	Horn, 12vdc, Dba [Wolo]	1
27	07791	(000000-)	Nut, Hex, Flng, M8 X 1.25	3
28	39277	(000000-)	Screw, Hex, M8 X 1.25 X 25, 8.8	1
29	44961	(000000-)	Tie, Cable, Nyl, 14.5l .30w 4.0 Max D	1
30	86866	(000000-)	Pin, Cotter, Hair, 0.38d .072 Wir	4
31	32491	(000000-)	Washer, Flat, 0.31, Std	4
32	41141	(000000-)	Washer, Lock, Int- Ext, 0.31	1
33	1057684	(000000-)	Retainer, Skirt, .12, 1.0w X 10.4l, Pl	2
34	1042791	(000000-)	Insulation, Acstc, 2.0, 02.0 X 12.0	1
35	1061216	(001281-)	Plug, Hole, Rnd, 1.37h 0.45l, Blk Nyl	2
36	21168	(000000-)	Plug, Hole, Rnd, 0.25h 0.8l, Brb, Nyl	2
37	1055605	(007663-)	Plug, Hole, Rnd, 0.38h .4- .7, Blk Nyl	1

Fig. 3 - Brush Door Group, Right Side

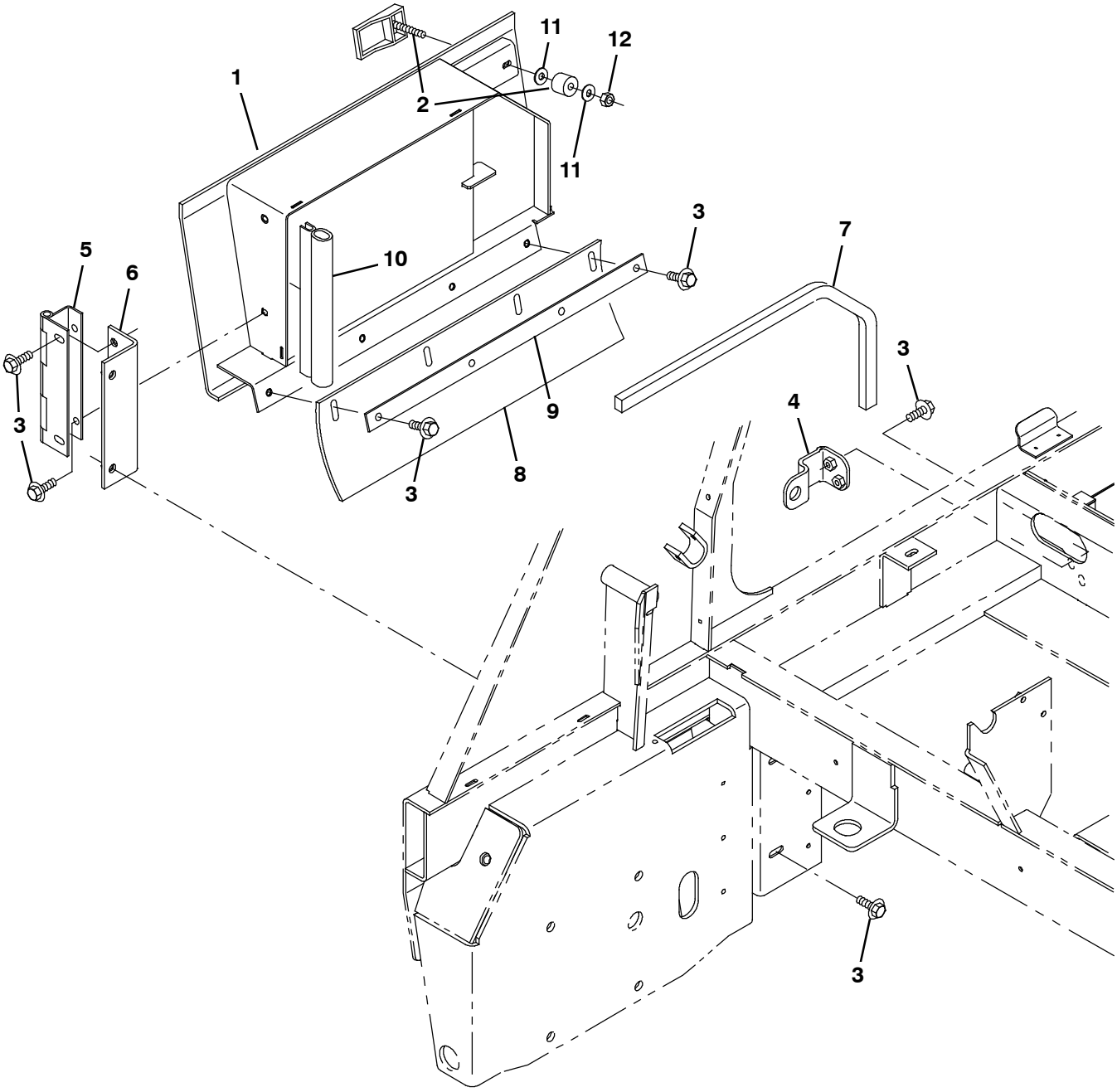

354937 - ALL

Fig. 3 - Brush Door Group, Right Side

Ref.	Part No.	Serial Number	Description	Qty.
1	1044844	(000000-)	Door Wldt, Brush, Rh	1
2	360388	(000000-)	Latch, Swell	1
3	1020341	(000000-)	Screw, Hex, M8 X 1.25 X 20, Ss, Sems	12
4	1048746	(000000-)	Bracket, Stop, Brush Door	1
5	360283	(000000-)	Hinge, .38pin .12 3.5w 07.8l, 4/0.38h	1
6	1048750	(000000-)	Bracket, Hinge, Door	1
7	360319	(000000-)	Seal, Rbr, Open, 0.38, 1.25w 25.5l	1
8	360784	(000000-)	Seal	1
9	361306	(000000-)	Retainer, Skirt, .12, 1.0w X 19.3l, Pl	1
10	363502	(000000-)	Seal, Bulb, Str, 0.50d .13grip 009.4l	4
11	39349	(000000-)	Washer, Flat, 0.31, Sae	2
12	32960	(000000-)	Nut, Hex, Lock, .31- 24, Nl	1

Fig. 4 - Brush Door Group, Left Side

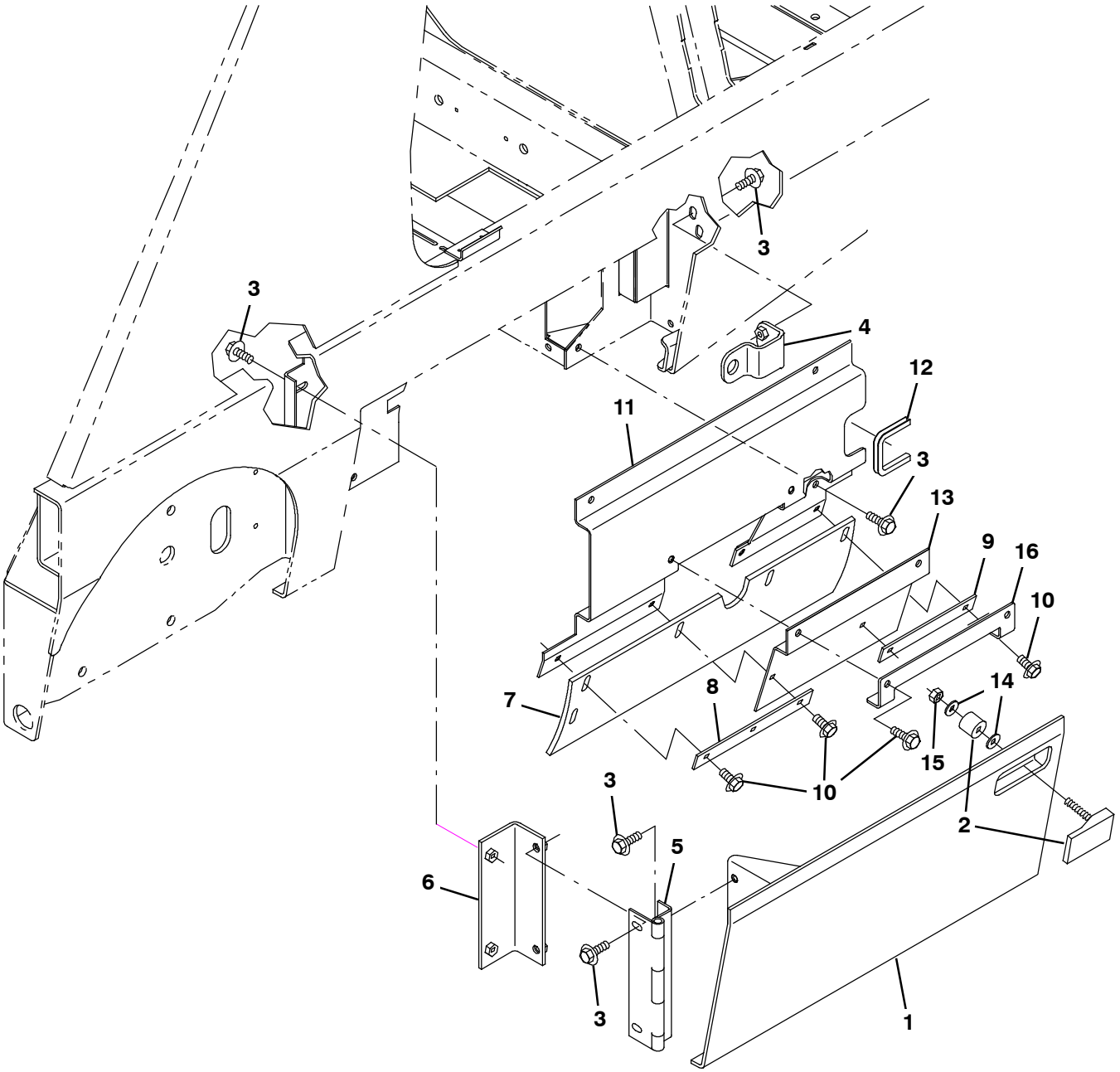

354938 - IC

Fig. 4 - Brush Door Group, Left Side

Ref.	Part No.	Serial Number	Description	Qty.
1	1044845	(000000-)	Door Wldt, Brush, Lh	1
2	360388	(000000-)	Latch, Swell	1
3	1037346	(000000-)	Screw, Hex, M8 X 1.25 X 25, 9.8, Sems	12
4	1048746	(000000-)	Bracket, Stop, Brush Door	1
5	360283	(000000-)	Hinge, .38pin .12 3.5w 07.8l, 4/0.38h	1
6	1048750	(000000-)	Bracket, Hinge, Door	1
7	360761	(000000-)	Seal	1
8	360781	(000000-)	Retainer, Skirt, .12, 1.0w X 08.1l, Pl	1
9	360763	(000000-)	Strip, Retainer, Seal	1
10	1020341	(000000-)	Screw, Hex, M8 X 1.25 X 20, Ss, Sems	6
11	1048751	(000000-)	Plate, Seal, Hyd Drive	1
12	57564	(000000-)	Molding, Trim, Pvc, .08- .11 05.0l	1
13	1056205	(000000-)	Seal, Dust	1
14	39349	(000000-)	Washer, Flat, 0.31, Sae	2
15	32960	(000000-)	Nut, Hex, Lock, .31- 24, Nl	1
16	1056206	(000000-)	Strip, Retainer, Seal	1

Fig. 5 - Seat and Cover Group (000000-003440)

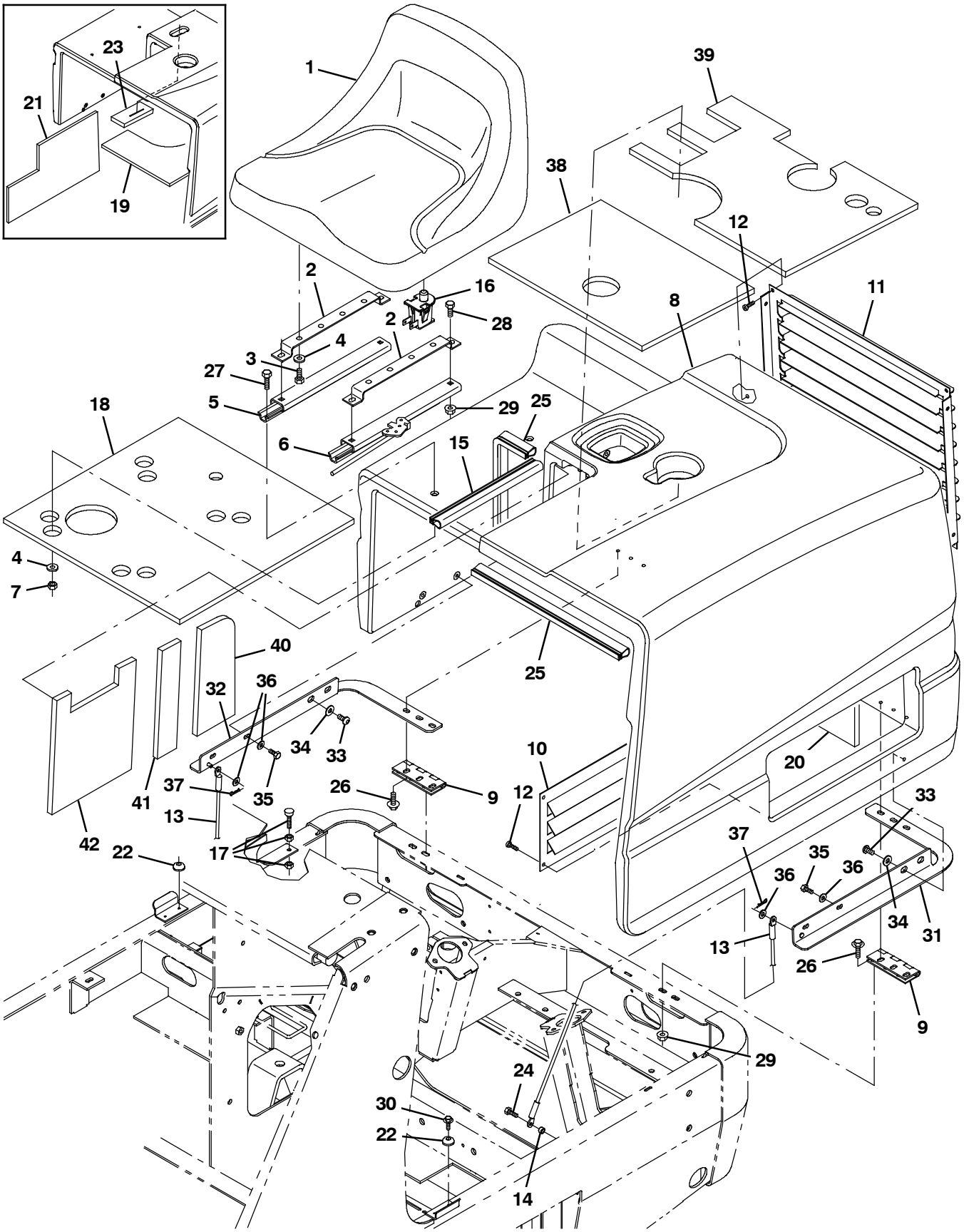

354925 - NA

Fig. 5 - Seat and Cover Group (000000-003440)

Ref.	Part No.	Serial Number	Description	Qty.
1	9010740	(000000-003440)	Seat Kit, Replacement [S20]	1
2	1045229	(000000-003440)	Bracket, Adj, Seat	2
3	54395	(000000-003440)	Screw, Hex, .31-18 X 0.62, G5	4
4	32490	(000000-003440)	Washer, Flat, 0.25, Std	8
5	1047447	(000000-003440)	Track, Slide, Seat Adj, 12.5l	1
6	1048198	(000000-003440)	Track, Slide, Seat Adj, 12.5l, W/ Latch	1
7	08709	(000000-003440)	Nut, Hex, Lock, M8 X 1.25, Nl	4
8	1060541	(000000-002464)	Shroud, Rear, Trimmed	1
8	1064956	(002465-003440)	Shroud, Rear [S20]	1
9	360704	(000000-003440)	Hinge, .25pin .12 3.0w 04.5l, 6/0.38sl	2
10	1049988	(000000-003440)	Panel, Louver	1
11	1049987	(000000-003440)	Panel, Louver	1
12	360973	(000000-003440)	Screw, Pan, 12-16 X 0.50, F/ Plstc	8
13	1056045	(000000-003440)	Cable, Glv .13d 024.2l .25eye /.25eye	2
14	222516	(000000-003440)	Sleeve, P/M, 0.32b 0.50d 0.3l [430ss]	2
15	1050785	(000000-003440)	Seal, Afmkt, Bulb, 90, 1.33 01ft	1
16	1048955	(000000-003440)	Switch, Seat, No [Delta 6440-04]	1
17	75128	(000000-003440)	Spindle, Adjustment	1
18	361345	(000000-003440)	Insulation, Acstc, 0.5, 21.4 X 20.6 C-O	1
19	361342	(000000-002464)	Insulation, Acstc, 0.5, 32.0 X 21.6 Ntch	1
20	361344	(000000-003440)	Insulation, Acstc, 0.5, 31.6 X 14.1 Ntch	1
21	361343	(000000-002464)	Insulation, Acstc, 0.5, 21.5 X 12.2 Ntch	1
22	361554	(000000-003440)	Bumper, Rbr, 0.90d 0.38th 0.18h	2
23	361951	(000000-002464)	Insulation, Acstc, 0.8, 06.6 X 03.0 Slit	1
24	11329	(000000-003440)	Screw, Hex, M6 X 1.00 X 16, Nl, Ss	2
25	10576	(000000-003440)	Seal, Bulb, 90, 0.50d .06-.09grip 022.5l	1
26	1037346	(000000-003440)	Screw, Hex, M8 X 1.25 X 25, 9.8, Sems	8
27	06955	(000000-003440)	Screw, Hex, M8 X 1.25 X 35, 8.8	4
28	16735	(000000-003440)	Screw, Hex, M8 X 1.25 X 16, 8.8	4
29	07791	(000000-003440)	Nut, Hex, Flng, M8 X 1.25	8
30	223198	(000000-003440)	Screw, Hex, M5 X 0.80 X 10, Fmg	2
31	1058717	(001518-003440)	Plate Wldt, Lh	1
32	1058722	(001518-003440)	Plate Wldt, Rh	1
33	17284	(001518-003440)	Screw, Btn, M8 X 1.25 X 16, Ss	4
34	32491	(001518-003440)	Washer, Flat, 0.31, Std	4
35	11329	(001518-003440)	Screw, Hex, M6 X 1.00 X 16, Nl, Ss	6
36	32490	(001518-003440)	Washer, Flat, 0.25, Std	2
37	08085	(001518-003440)	Pin, Cotter, Hair, 0.31d .058 Wir	2
38	1068101	(002465-003440)	Insulation, Acstc, 0.5, 13.0 X 17.8 Ntch	1
39	1068102	(002465-003440)	Insulation, Acstc, 0.5, 15.4 X 20.5 Ntch	1
40	1068103	(002465-003440)	Insulation, Acstc, 0.5, 4.5 X 11.0 Ntch	1
41	1068104	(002465-003440)	Insulation, Acstc, 0.5, 2.3 X 11.1 Ntch	1
42	1068105	(002465-003440)	Insulation, Acstc, 0.5, 9.2 X 11.8 Ntch	1

Fig. 6 - Seat and Cover Group (003441-)

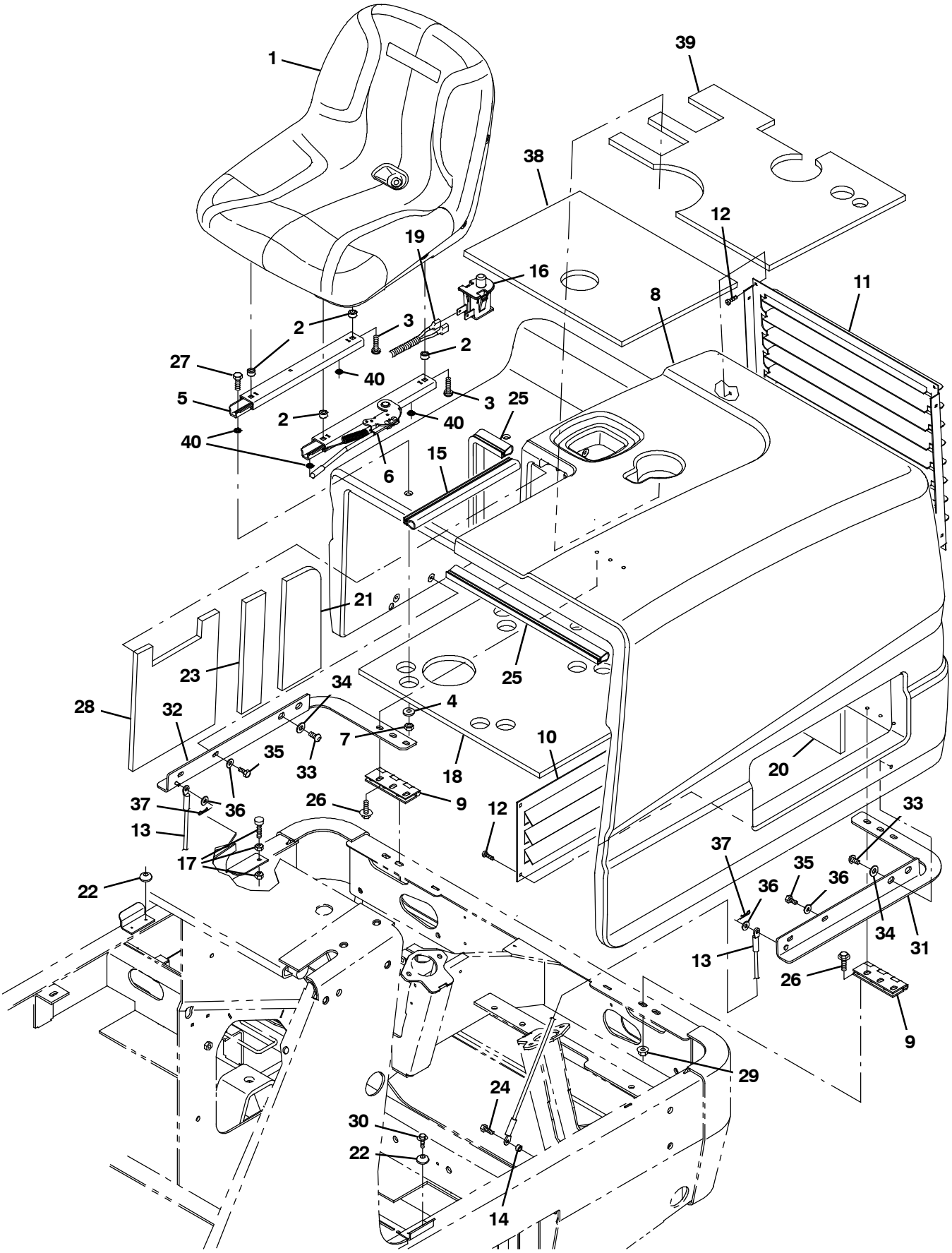

354925 - NA

Fig. 5 - Seat and Cover Group (003441-)

Ref.	Part No.	Serial Number	Description	Qty.
1	1201894	(003441-)	Seat, Std [Milsco]	1
2	360460	(003441-)	Sleeve, P/M, 0.34b 0.63d 0.4l, Ss / Oil	4
3	1073048	(003441-)	Screw, Pan, Phl, .31- 18 X 1.50, G2	4
4	32491	(003441-)	Washer, Flat, 0.31, Std	4
5	1077067	(003441-)	Track, N- Lkg, Seat, 12.5l, No Stud	1
6	1077071	(003441-)	Track, Locking, 12.5l, No Stud W/Handle	1
7	08709	(003441-)	Nut, Hex, Lock, M8 X 1.25, Nl	4
8	1064956	(003441-)	Shroud, Rear [S20]	1
9	360704	(003441-)	Hinge, .25pin .12 3.0w 04.5l, 6/0.38sl	2
10	1049988	(003441-)	Panel, Louver	1
11	1049987	(003441-)	Panel, Louver	1
12	360973	(003441-)	Screw, Pan, 12- 16 X 0.50, F/ Plstc	8
13	1056045	(003441-)	Cable, Glv .13d 024.2l .25eye /.25eye	2
14	222516	(003441-)	Sleeve, P/M, 0.32b 0.50d 0.3l [430ss]	2
15	1050785	(003441-)	Seal, Afmkt, Bulb, 90, 1.33 01ft	1
16	1048955	(003441-)	Switch, Seat, No [Delta 6440- 04]	1
17	75128	(003441-)	Spindle, Adjustment	1
18	361345	(003441-)	Insulation, Acstc, 0.5, 21.4 X 20.6 C- O	1
19	1072210	(003441-)	Harness, Wire, Seat [S20]	1
20	361344	(003441-)	Insulation, Acstc, 0.5, 31.6 X 14.1 Ntch	1
21	1068103	(003441-)	Insulation, Acstc, 0.5, 4.5 X 11.0 Ntch	1
23	1068104	(003441-)	Insulation, Acstc, 0.5, 2.3 X 11.1 Ntch	1
22	361554	(003441-)	Bumper, Rbr, 0.90d 0.38th 0.18h	2
24	11329	(003441-)	Screw, Hex, M6 X 1.00 X 16, Nl, Ss	2
25	10576	(003441-)	Seal, Bulb, 90, 0.50d .06- .09grip 022.5l	1
26	1037346	(003441-)	Screw, Hex, M8 X 1.25 X 25, 9.8, Sems	8
27	06955	(003441-)	Screw, Hex, M8 X 1.25 X 35, 8.8	4
28	1068105	(003441-)	Insulation, Acstc, 0.5, 9.2 X 11.8 Ntch	1
29	07791	(003441-)	Nut, Hex, Flng, M8 X 1.25	4
30	223198	(003441-)	Screw, Hex, M5 X 0.80 X 10, Fmg	2
31	1058717	(003441-)	Plate Wldt, Lh	1
32	1058722	(003441-)	Plate Wldt, Rh	1
33	17284	(003441-)	Screw, Btn, M8 X 1.25 X 16, Ss	4
34	32491	(003441-)	Washer, Flat, 0.31, Std	4
35	11329	(003441-)	Screw, Hex, M6 X 1.00 X 16, Nl, Ss	6
36	32490	(003441-)	Washer, Flat, 0.25, Std	2
37	08085	(003441-)	Pin, Cotter, Hair, 0.31d .058 Wir	2
38	1068101	(003441-)	Insulation, Acstc, 0.5, 13.0 X 17.8 Ntch	1
39	1068102	(003441-)	Insulation, Acstc, 0.5, 15.4 X 20.5 Ntch	1
40	1077073	(003441-)	Nut, Push, Bolt Retention, Stl,5/16 Thrd	4

Fig. 7 - Rear Cover Latch Group (000000-002464)

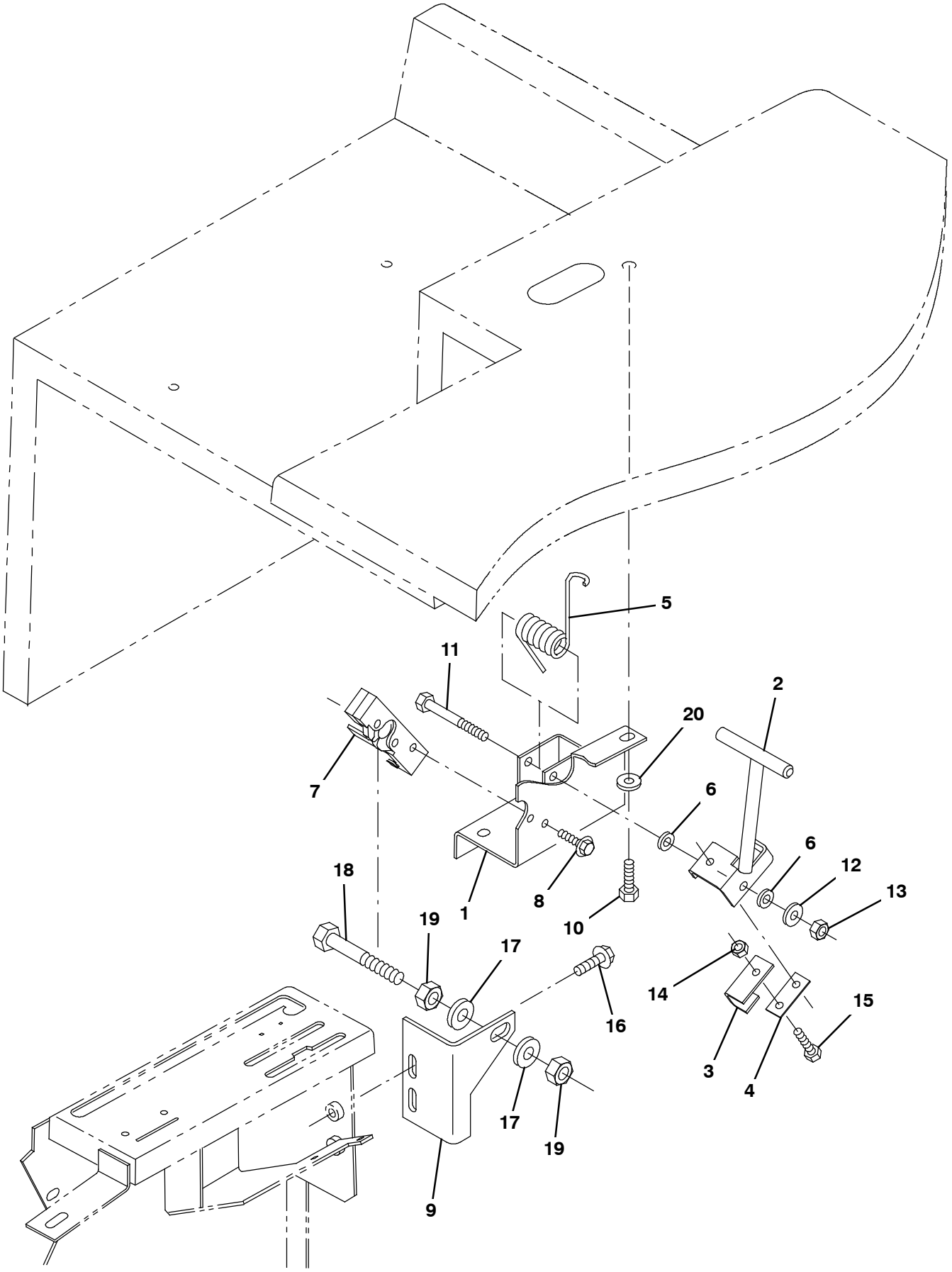

354924 - ALL, NA

Fig. 7 - Rear Cover Latch Group (000000- 002464)

Ref.	Part No.	Serial Number	Description	Qty.
1	1052805	(000000- 002464)	Bracket Wldt, Latch	1
2	1052817	(000000- 002464)	Handle Wldt, Latch, Shrd	1
3	1052804	(000000- 002464)	Channel, Latch	1
4	361165	(000000- 002464)	Spring, Flat, .06, 0.75w X 01.8l, 2/.28h	1
5	87581	(000000- 002464)	Spring, Tors, 0.81id .12wir 08.0coil	1
6	43454	(000000- 002464)	Washer, Flat, 0.34b 0.69d .06, Nyl	2
7	72439	(000000- 002464)	Latch	1
8	16949	(000000- 002464)	Screw, Hex, .25- 20 X 0.75, Sems	2
9	1052803	(000000- 002464)	Bracket, Angle, Mtg, Pin, Latch	1
10	15675	(000000- 002464)	Screw, Hex, M8 X 1.25 X 16, Ss	4
11	76960	(000000- 002464)	Screw, Hex, .31- 18 X 2.25, G5	1
12	32491	(000000- 002464)	Washer, Flat, 0.31, Std	1
13	32983	(000000- 002464)	Nut, Hex, Lock, .31- 18, Nl	1
14	08708	(000000- 002464)	Nut, Hex, Lock, M6 X 1.00, Nl	2
15	87308	(000000- 002464)	Screw, Hex, M6 X 1.00 X 12, 8.8	2
16	1037346	(000000- 002464)	Screw, Hex, M8 X 1.25 X 25, 9.8, Sems	2
17	32486	(000000- 002464)	Washer Flat,0.50,Sae	2
18	27985	(000000- 002464)	Screw, Hex, .50- 13 X 2.50, G5	1
19	32523	(000000- 002464)	Nut, Hex, Jam, .50- 13	2
20	32491	(000000- 002464)	Washer, Flat, 0.31, Std	4

Fig. 8 - Rear Cover Latch Group (002465-)

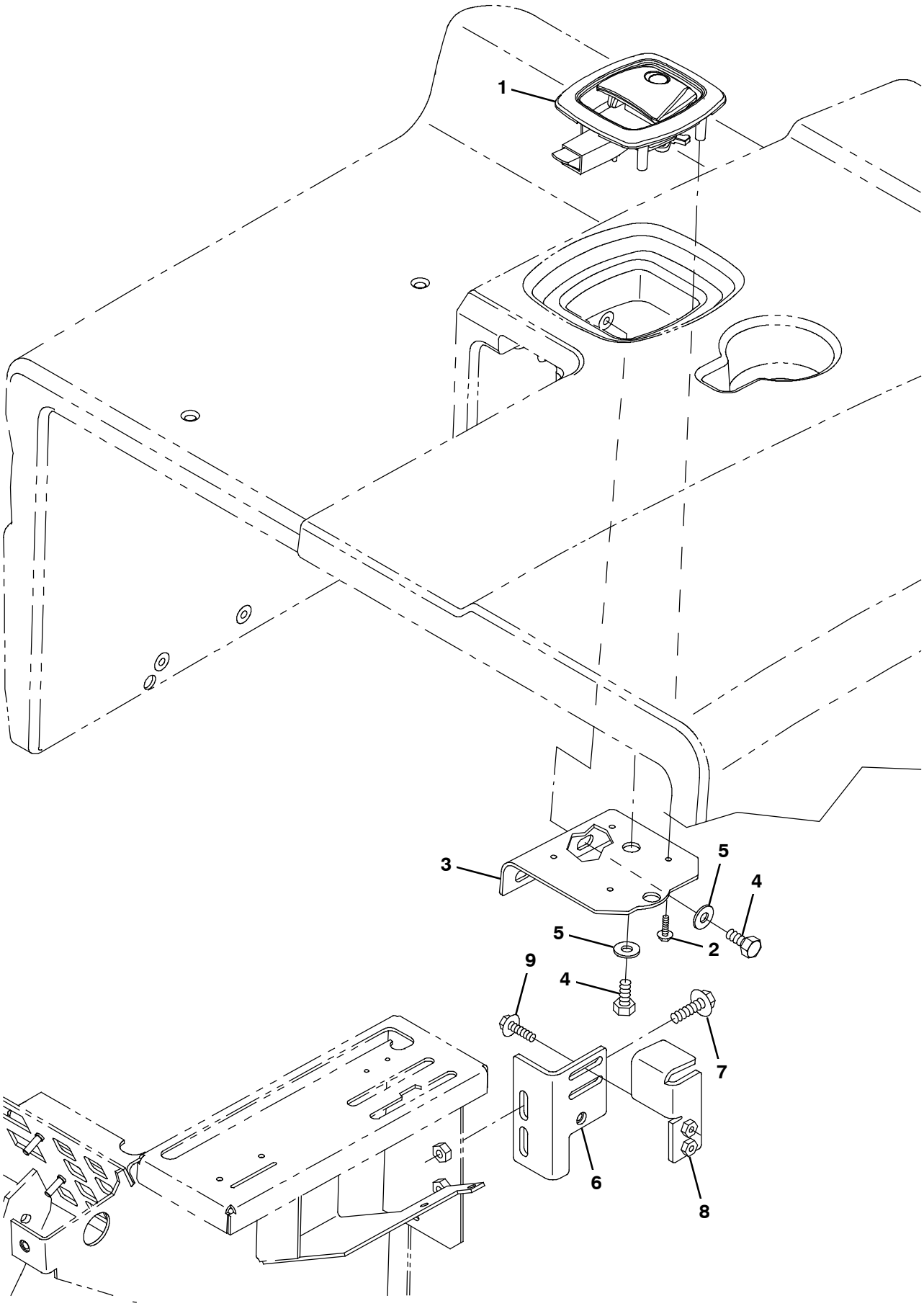

356272 - ALL, NA

Fig. 8 - Rear Cover Latch Group (002465-)

Ref.	Part No.	Serial Number	Description	Qty.
1	1068098	(002565-)	Latch, Paddle, Rwk	1
2	71026	(002565-)	Screw, Hex, M4 X 0.70 X 20, Fmg	1
3	1066146	(002565-)	Plate, Mtg, Latch	1
4	15675	(002565-)	Screw, Hex, M8 X 1.25 X 16, Ss	1
5	32491	(002565-)	Washer, Flat, 0.31, Std	1
6	1065829	(002565-)	Bracket, Latch, Mtg, Strike	2
7	1037346	(002565-)	Screw, Hex, M8 X 1.25 X 25, 9.8, Sems	1
8	1066138	(002565-)	Bracket, Adj, Strike	2
9	1036892	(002565-)	Screw, Hex, M6 X 1.00 X 25, 9.8, Sems	1

Fig. 9 - Operator Station Group

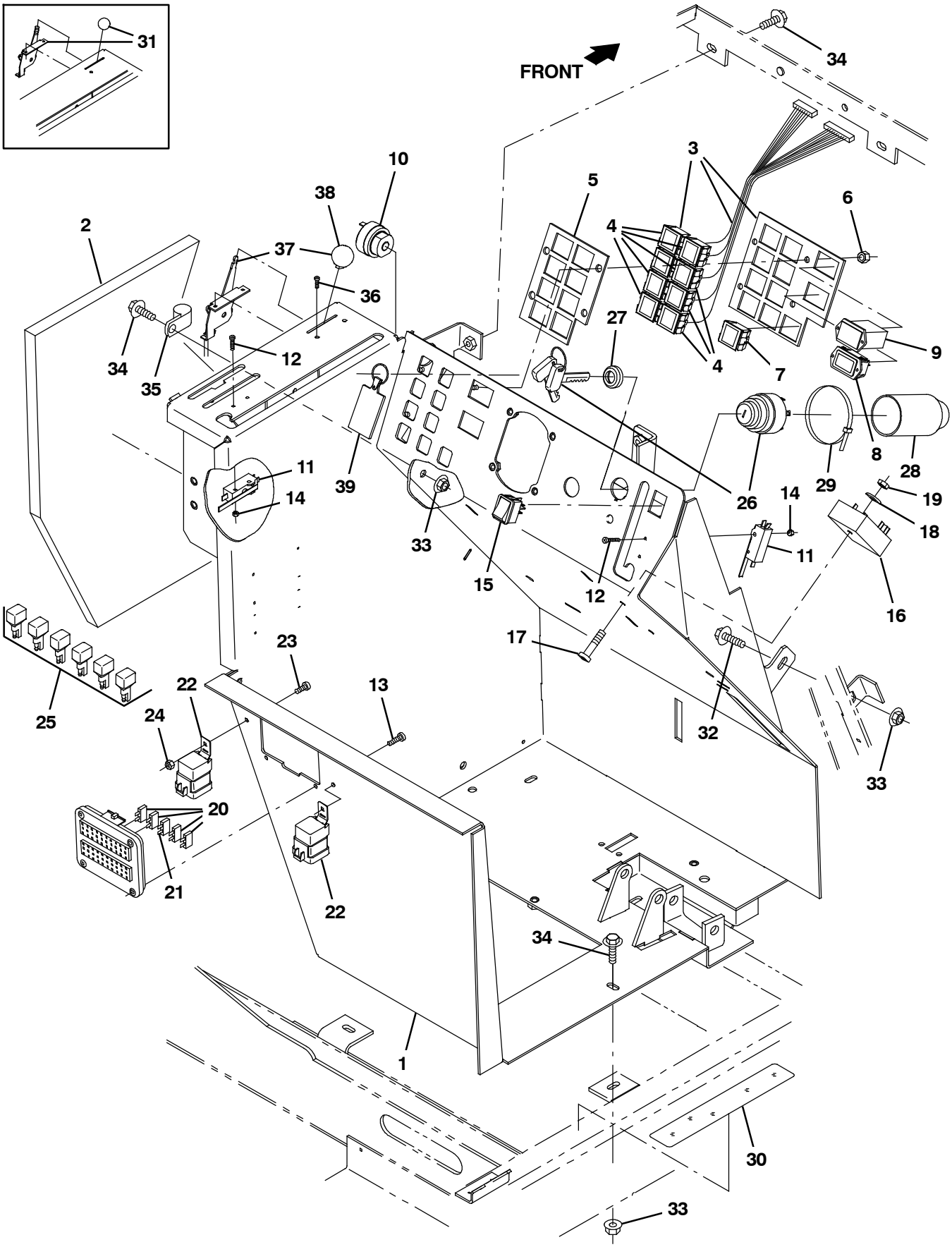

354930 - D, NA

Fig. 9 - Operator Station Group

	Ref.	Part No.	Serial Number	Description	Qty.
	1	9006903	(000000-)	Oprtr Station, W/ Label,[S20] Na	1
	1	9006905	(000000-)	Oprtr Station, W/ Label,[S20] Jp	1
	2	1050888	(000000-)	Insulation, Acstc, 0.8, 19.9 X 18.0 Cham	1
▽	3	1051124	(000000-)	Panel Assy, Indicator Lights, Ic	1
▲	4	361075	(000000-)	Light, Panl, 14vdc, 1.1 X 1.0	8
	5	1045211	(000000-)	Seal, Rbr, Clsd, 0.38, Instmt Panl	1
	6	08708	(000000-)	Nut, Hex, Lock, M6 X 1.00, Nl	4
	7	361075	(000000-)	Light, Panl, 14vdc, 1.1 X 1.0	1
	8	1068904	(000000-)	Gauge, Hourmeter, 05- 277vdc/Vac, 2- Hole	1
	9	1045923	(000000-)	Gauge, Fuel	1
	10	386346	(000000-)	Alarm, Audio, 10- 48vdc [Mallory]	1
	11	1008142	(000000-)	Switch, Snap, 25a Spdt	2
	12	1054872	(000000-)	Screw, Pan, Phl, M3 X 0.5 X 25, Blk	4
	13	39239	(000000-)	Screw, Pan, Phl, 10- 32 X 0.50, G2, Blk	4
	14	01754	(000000-)	Nut, Hex, Std, M3 X 0.50, 8	4
	15	1048456	(000000-)	Switch, Rocker, 3 Position	1
	16	1052435	(000000-)	Timer, 12vdc, 10a, 2s [Ce Seat Switch]	1
	17	32747	(000000-)	Screw, Pan, Phl, M6 X 1.00 X 40, Ss	1
	18	01684	(000000-)	Washer, Flat, 0.27b 0.69d .05, Ss	1
	19	41359	(000000-)	Nut, Hex, Std, M6 X 1.00, 8	1
	20	1030985	(000000-)	Fuse, Blade, 015a, 32vdc [Mini]	4
	21	1049735	(000000-)	Fuse, Blade, 020a, 32vdc [Mini]	1
	22	56186	(000000-)	Relay, 12vdc, 040a, Spdt No	2
	23	1054875	(000000-)	Screw, Hex, M5 X 1.0 X 16, Blk	2
	24	06549	(000000-)	Nut, Hex, Lock, M5 X 0.80, Nl	1
	25	222290	(000000-)	Diode, Ele, Plug	5
▽	26	87536	(000000-)	Switch, Ignition [Ku]	1
▲		87866	(000000-)	Key, Ignition [Set Of 2]	1
	27	382516	(000000-)	Boot, .63id .29l .90w	1
	28	383165	(000000-)	Boot, Switch, Ignition	1
	29	49263	(000000-)	Tie, Cable, Nyl, 11.4l .19w 3.0 Max D	1
	30	86798	(000000-)	Tread, Non- Skid, 01.4w 12.0l	1
	31	360465	(000000- 004632)	Cable, Cntrl, 46.3l, W/ Handle	1
	32	1037354	(000000-)	Screw, Hex, M8 X 1.25 X 30, 9.8, Sems	6
	33	07791	(000000-)	Nut, Hex, Flng, M8 X 1.25	5
	34	1037346	(000000-)	Screw, Hex, M8 X 1.25 X 25, 9.8, Sems	6
	35	58366	(000000-)	Clamp, Cable, Stl, 1.25d X 1.00w, 1hole	1
	36	1054874	(000000-)	Screw, Pan, Phl, 10- 16 X .75, Blk	2
	37	1074099	(004633-)	Cable, Cntrl, 46.3l, W/ Handle	1
	38	1074066	(004633-)	Knob, Cable Lever, Throttle	1
	39	1075003	(000000-)	Keychain, Rectangle, Parts & Service	1

Fig. 10 - Steering Wheel Group

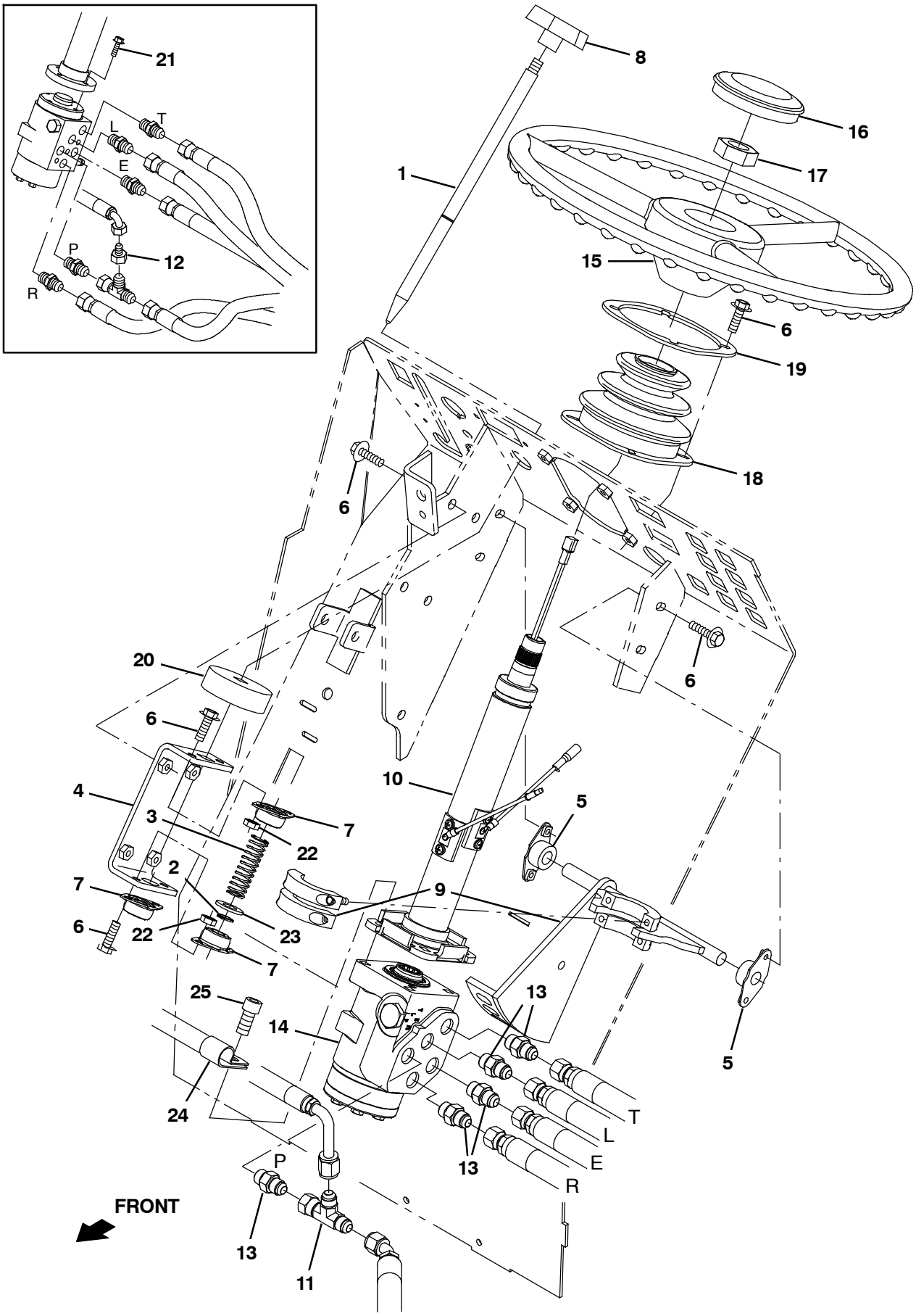

354923 - IC, NA

Fig. 10 - Steering Wheel Group

Ref.	Part No.	Serial Number	Description	Qty.
1	360711	(000000-)	Rod, Latch, Tilt, Steering	1
2	70717	(000000-)	Ring, Retaining, Ext, 0.50d, Hd	1
3	22290	(000000-)	Spring, Cmpr, 0.72od .06wir 02.3l	1
4	1045222	(000000-)	Channel, Mtg, Steering Latch	1
5	70709	(000000-)	Bearing, Flng, 2hole, 0.50b	2
6	1036892	(000000-)	Screw, Hex, M6 X 1.00 X 25, 9.8 Sems	16
7	47585	(000000-)	Bearing, Flng, 2hole, 0.50b [Nyl]	3
8	04706	(000000-)	Knob, Tee, 0.38- 16, 2.5 X 1.0 1.1l,Plstc	1
9	1058784	(000000-)	Bracket Wldt, Steering, Tilt	1
10	1048351	(000000-)	Column, Steering, 09.9l 0.86d 36tooth	1
11	42215	(000000- 002999)	Fitting, Hyd, Tee, Jf06/Jm06/Jm06, Run	1
11	762435	(003000-)	Fitting, Hyd, Tee, Ff06/Fm06/Fm06, Run	1
12	47752	(000000- 002999)	Fitting, Hyd, Str, Jf06/Jm04	1
12	767428	(003000- 005910)	Fitting, Hyd, Str, Ff06/Fm04	1
13	56690	(000000- 002999)	Fitting, Hyd, Str, Jm06/Om06	5
13	762433	(003000-)	Fitting, Hyd, Str, Fm06/Om06	5
14	1045822	(000000-)	Steer- Control, Hyd05, 06.1 914 (See Breakdowns)	1
15	1058996	(000000-)	Wheel, Steering, 14.0D 0.81B 36Tooth	1
16	1024478	(000000-)	Button, Cntrl, Horn	1
17	56185	(000000-)	Nut, Hex, Jam, M20 X 1.5	1
18	70622	(000000-)	Boot, Bellows, 3.1l 4.4w 2.8h 1hole, Neo	1
19	360867	(000000-)	Plate, Mtg	1
20	75968	(000000-)	Insulation, Acstc, Rnd, 0.8, 02.5d 0.5h	1
21	06960	(000000- 005910)	Screw, Hex, M10 X 1.50 X 16, 8.8	4
22	08708	(000000-)	Nut, Hex, Lock, M6 X 1.00, Nl	4
23	32486	(000000-)	Washer, Flat, 0.53b 1.06d .10, Stl, Pl	1
24	69234	(000000- 005910)	Clamp, Cable, Stl, 1.00d X 0.75w, 1hole	1
24	1075481	(005911-)	Clamp, Cable, Stl, .562d X 0.75w, 1hole	1
25	1208977	(005911-)	Screw, Soc, M10 X 1.5 X 20, 12.9	4

Fig. 11 - Engine and Mount Group

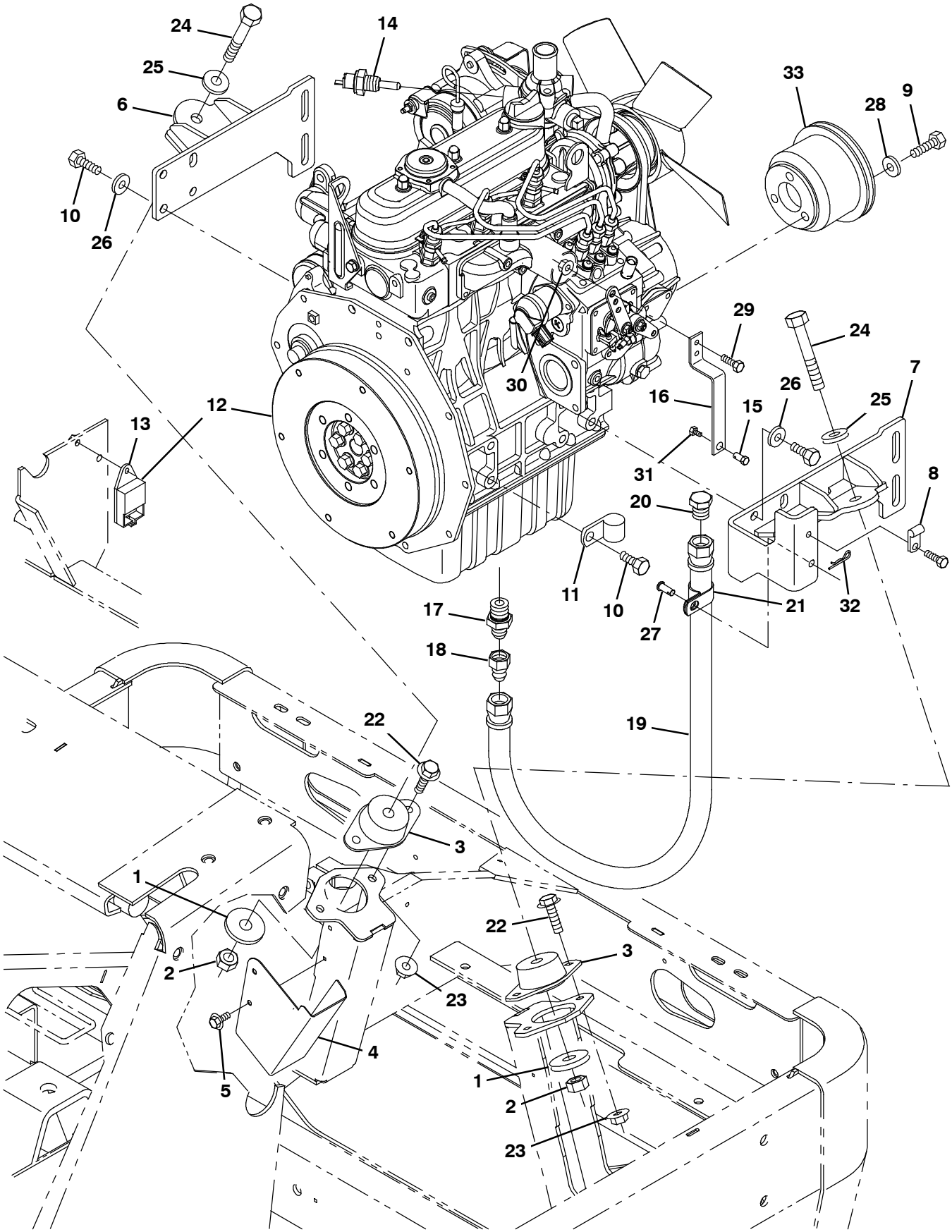

354939 - D

Fig. 11 - Engine and Mount Group

	Ref.	Part No.	Serial Number	Description	Qty.
	1	51564	(000000-)	Washer, Flat, 0.53b 1.75d .12, Stl, Pl	2
	2	08711	(000000-)	Nut, Hex, Lock, M12 X 1.75, Nl	2
	3	360721	(000000-)	Isolator, Vib, Flng, 1.3l .5b 2/.39h	2
	4	1046055	(000000-)	Shield, Fltr, Oil	1
	5	74455	(000000-)	Screw, Hex, M6 X 1.00 X 12, Fmg	2
	6	1048857	(000000-)	Plate Wldt, Mtg, Eng, Rear, Rh, Dsl	1
	7	1048856	(000000-)	Plate Wldt, Mtg, Eng, Rear, Lh, Dsl	1
	8	1043352	(000000-)	Clamp, Cable, Stl, 0.18d X 0.75w, 1hole	1
	9	33612	(000000-)	Screw, Hex, M10 X 1.25 X 35, 8.8	3
	10	58286	(000000-)	Screw, Hex, M10 X 1.25 X 20, 8.8	9
	11	69234	(000000-)	Clamp, Cable, Stl, 1.00d X 0.75w, 1hole	1
▽	12	1037973	(000000-)	Engine, Dsl, Kubota D1005 [2008] (See Engine Breakdown)	1
▲	13	366026	(000000-)	Timer, Glowplug [Ku]	1
	14	1050757	(000000-)	Switch, Thermostat, Water	1
	15	43242	(000000-)	Bushing, Swivel, .247d X .35, .31hex, Pl	1
	16	1049296	(000000-)	Arm, Cntrl, Govnr, Dsl	1
	17	366054	(000000-)	Fitting, Hyd, Str, Spcl	1
	18	78143	(000000-)	Fitting, Hyd, Str, Jf12/Jm08	1
	19	1056770	(000000-)	Hose, Hyd, Low08, Jf08str/Jf08str, 026.0	1
	20	16376	(000000-)	Fitting, Hyd, Plug, Jm08	1
	21	40678- 1	(000000-)	Clamp, Cable, Stl, 0.88d X 0.62w, 1hole	1
	22	1037354	(000000-)	Screw, Hex, M8 X 1.25 X 30, 9.8, Sems	4
	23	07791	(000000-)	Nut, Hex, Flng, M8 X 1.25	4
	24	06972	(000000-)	Screw, Hex, M12 X 1.75 X 60, 8.8	2
	25	32486	(000000-)	Washer Flat,0.50,Sae	2
	26	32492	(000000-)	Washer, Flat, 0.38, Std	8
	27	46800	(000000-)	Pin, Clevis, 0.31d X 0.75l	1
	28	32485	(000000-)	Washer, Flat, 0.38, Sae	3
	29	06942	(000000-)	Screw, Hex, M6 X 1.00 X 16, 8.8	3
	30	07790	(000000-)	Nut, Hex, Flng, M6 X 1.00	2
	31	49766	(000000-)	Screw, Hex, 08- 32 X 0.38, Ss	1
	32	86866	(000000-)	Pin, Cotter, Hair, 0.38d .072 Wir	1
	33	1048477	(000000-)	Sheave, Drive, Dsl [S20]	1

Fig. 12 - Engine Flywheel Housing and Mount Group

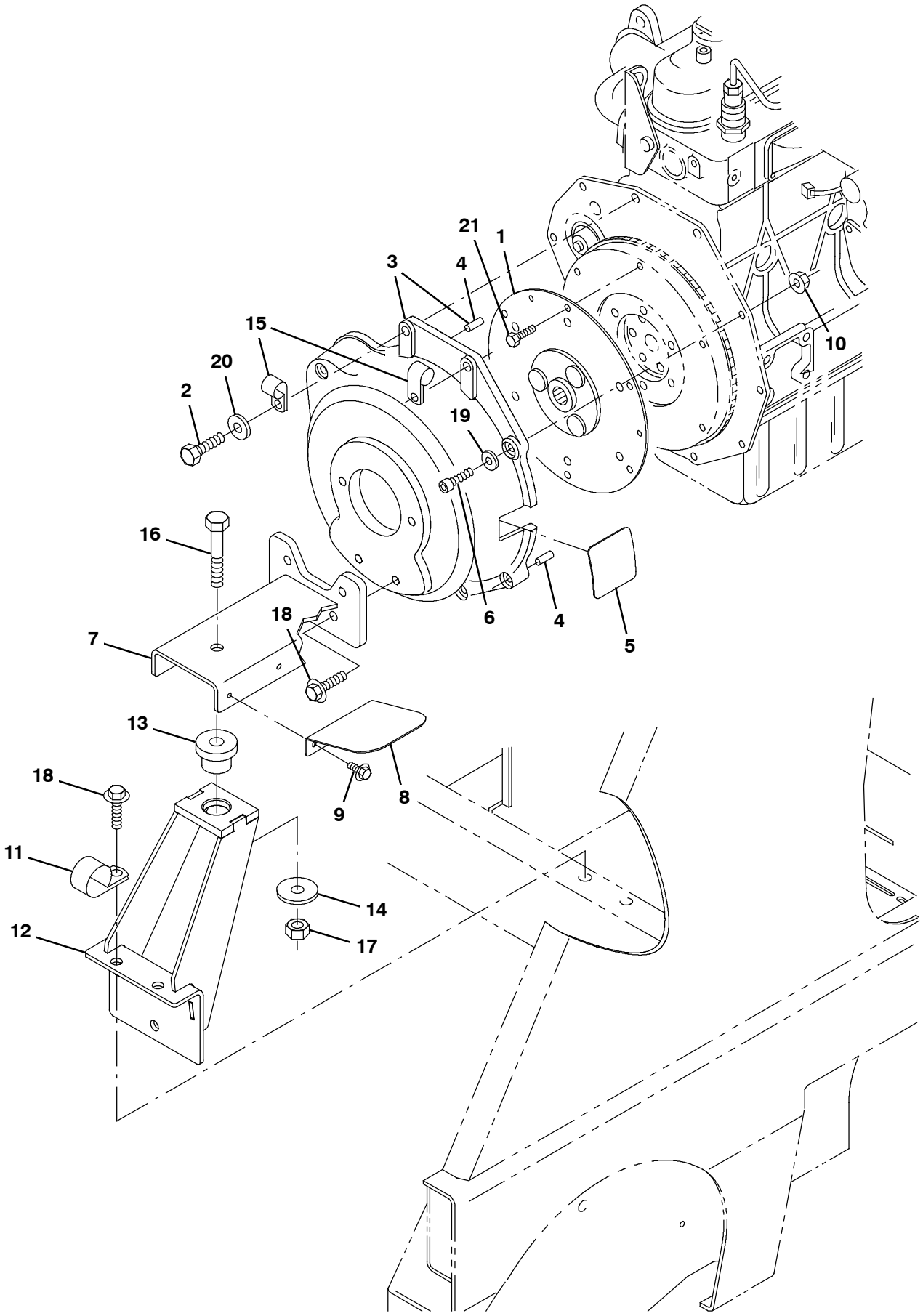

354940 - D

Fig. 12 - Engine Flywheel Housing and Mount Group

	Ref.	Part No.	Serial Number	Description	Qty.
	1	19252	(000000-)	Coupling, Drive, Flex, 09.5d /13tooth	1
	2	33612	(000000-)	Screw, Hex, M10 X 1.25 X 35, 8.8	2
▽	3	1047564	(000000-)	Housing, Flywheel, Mach [D1005 Kubota]	1
▲	4	14296	(000000-)	Pin, Roll, .312d X 0.75l, .312/.318	2
	5	1052049	(000000-)	Strip, Rbr, 0.06 02.50w 02.5l	1
	6	09278	(000000-)	Screw, Soc, M8 X 1.25 X 30, 12.9	4
	7	360732	(000000-)	Bracket Wldt, Mtg, Eng, Rear	1
	8	1048840	(000000-)	Shield, Battery	1
	9	74455	(000000-)	Screw, Hex, M6 X 1.00 X 12, Fmg	2
	10	07791	(000000-)	Nut, Hex, Flng, M8 X 1.25	1
	11	86328	(000000-)	Clamp, Cable, Stl, 1.50d X 0.75w, 1hole	1
	12	1048541	(000000-)	Angle Wldt, Mtg, Eng, Front [D1005]	1
	13	51176	(000000-)	Isolator, Vib, .50d	1
	14	51564	(000000-)	Washer, Flat, 0.53b 1.75d .12, Stl, Pl	1
	15	69234	(000000-)	Clamp, Cable, Stl, 1.00d X 0.75w, 1hole	2
	16	06971	(000000-)	Screw, Hex, M12 X 1.75 X 50, 8.8	1
	17	08711	(000000-)	Nut, Hex, Lock, M12 X 1.75, Nl	1
	18	1037358	(000000-)	Screw, Hex, M10 X 1.50 X 35, 9.8, Sems	4
	19	39349	(000000-)	Washer, Flat, 0.31, Sae	6
	20	32485	(000000-)	Washer, Flat, 0.38, Sae	2
	21	50388	(000000-)	Screw, Hex, M8 X 1.25 X 12, 8.8	6

Fig. 13 - Engine Air Cleaner Group

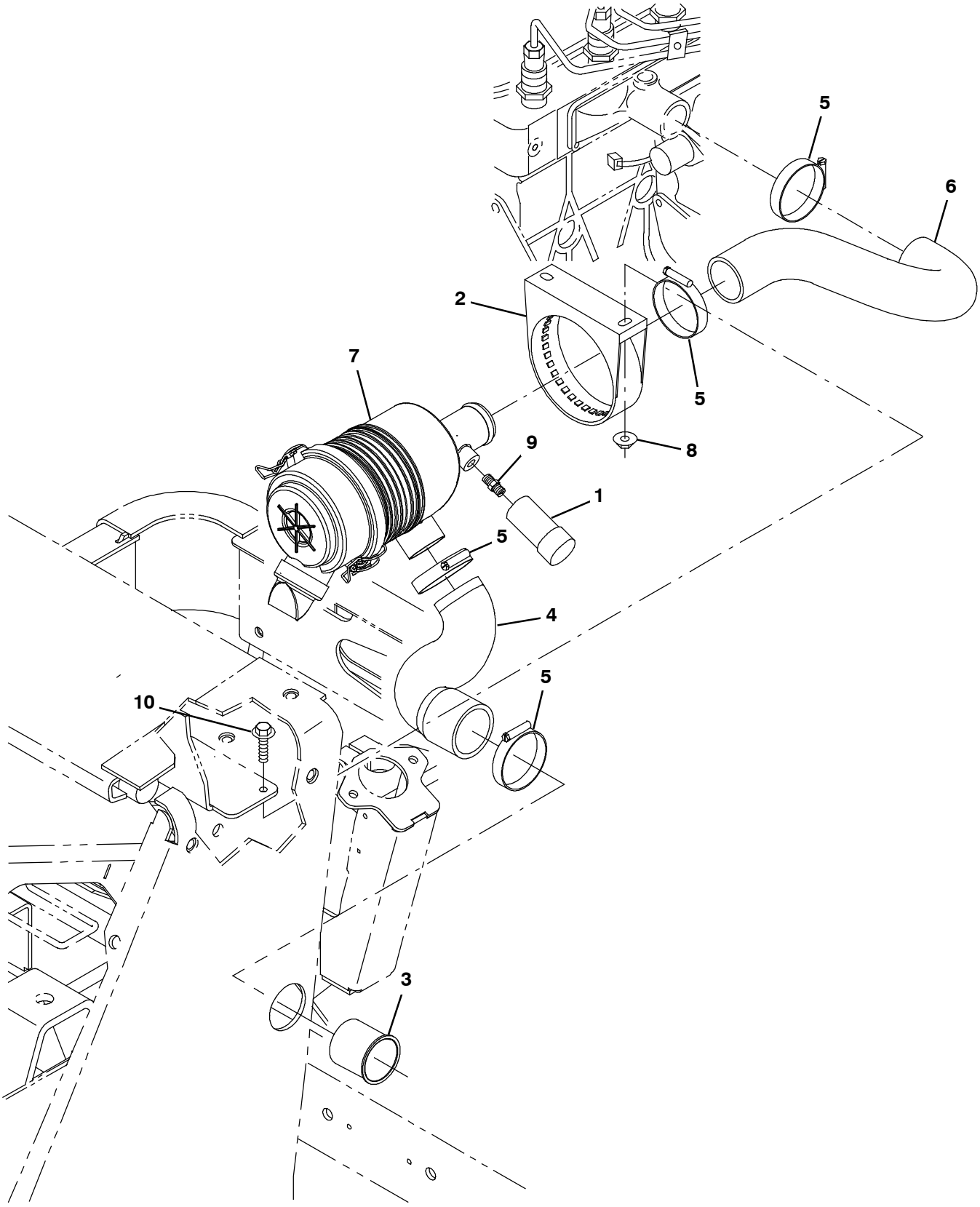

354941 - D

Fig. 13 - Engine Air Cleaner Group

	Ref.	Part No.	Serial Number	Description	Qty.
	1	03026	(000000-)	Indicator, Service, Fltr, Air [20h20 Dn]	1
	2	382101	(000000-)	Bracket, Mtg, Fltr, Air	1
	3	58346	(000000-)	Tube, Intake, 2.0d 02.0l, Flng	1
	4	1045524	(000000-)	Hose, Intake, Mold, 1.75id 2.00id [Epdm]	1
	5	22297	(000000-)	Clamp, Hose, Wormdrive, 1.56- 2.50d, .50w	4
	6	360364	(000000-)	Hose, Intake, Mold, 1.75id 1.75id [Epdm]	1
▽	7	1046302	(000000-)	Filter Assy, Air	1
▲		382493	(000000-)	Element, Fltr, Air	1
	8	07791	(000000-)	Nut, Hex, Flng, M8 X 1.25	2
	9	47566	(000000-)	Fitting, Hyd, Str, Pm02/Pm02	1
	10	1037355	(000000-)	Screw, Hex, M8 X 1.25 X 35, 9.8, Sems	2

Fig. 14 - Engine Radiator Group

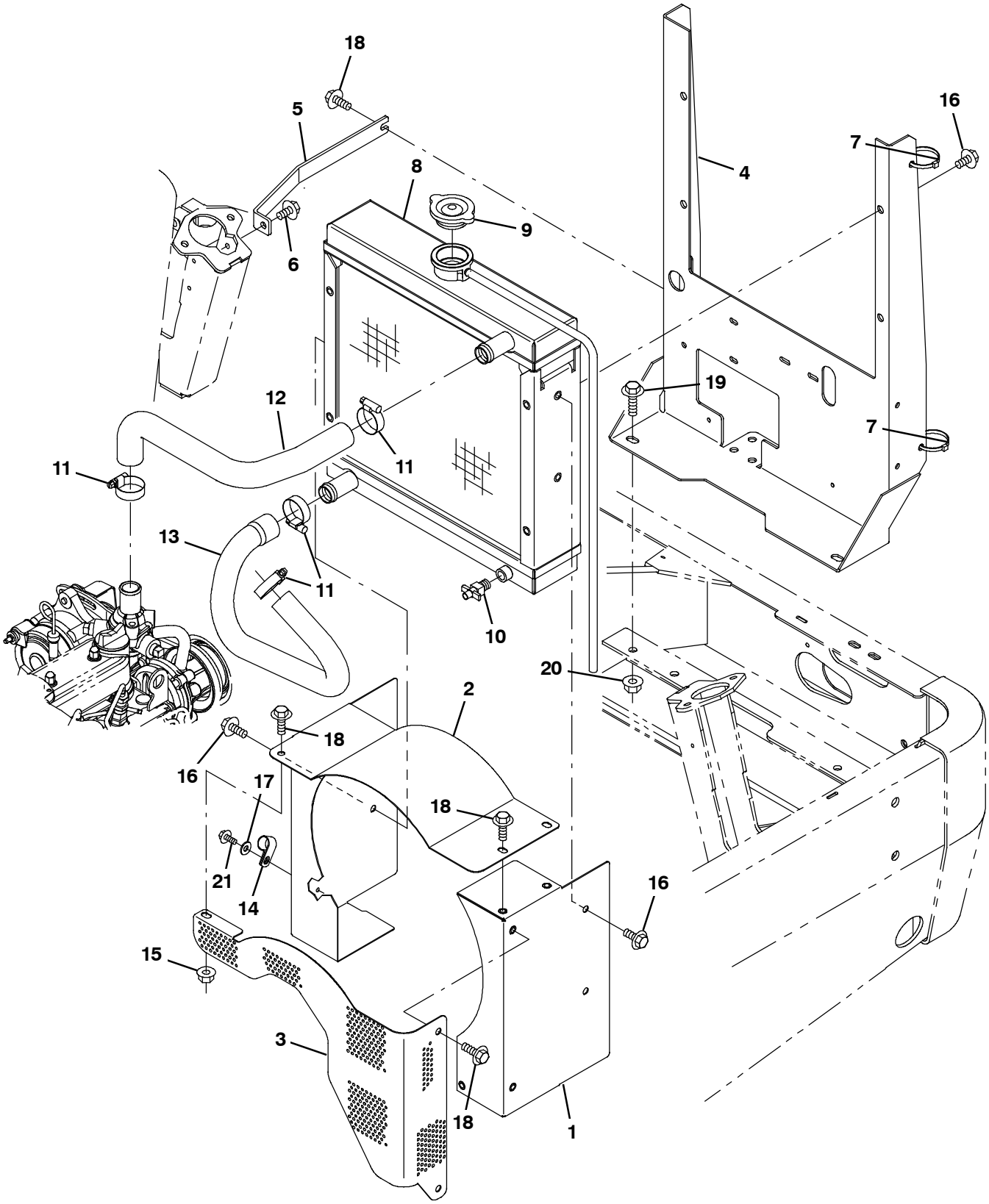

354942 - D, NA

Fig. 14 - Engine Radiator Group

Ref.	Part No.	Serial Number	Description	Qty.
1	9006906	(000000-)	Shroud, Fan, Radiator, W/ Label [S20] Na	1
1	9006908	(000000-)	Shroud, Fan, Radiator, W/ Label [S20] Jp	1
2	9006897	(000000-)	Shroud, Fan, Radiator, W/ Label [S20] Na	1
2	9006899	(000000-)	Shroud, Fan, Radiator, W/ Label [S20] Jp	1
3	1054559	(000000-)	Guard, Fan, Eng, Perf	1
4	1048489	(000000-)	Angle, Mtg, Radiator	1
5	1048501	(000000-)	Angle, Brace	1
6	763045	(000000-)	Screw, Hex, M8 X 1.25 X 20, Fmg	1
7	49266	(000000-)	Tie, Cable, Nyl, 07.3l .19w 1.8 Max D	2
8	1041869	(000000-)	Radiator, Alm	1
9	1045764	(000000-)	Cap, Radiator, 14psi [Stant]	1
10	54911-32	(000000-)	Fitting, Draincock, .25npt	1
11	11399	(000000-)	Clamp, Hose, Wormdrive, 0.81-1.50d, .50w	4
12	360363	(000000-)	Hose, Coolant, Mold, 1.00id To 1.00id	1
13	360362	(000000-)	Hose, Coolant, Mold, 1.00id To 1.00id	1
14	67767	(000000-)	Clamp, Cable, Stl, 0.69d X 0.62w, 1hole	1
15	07791	(000000-)	Nut, Hex, Flng, M8 X 1.25	1
16	1020341	(000000-)	Screw, Hex, M8 X 1.25 X 20, Ss, Sems	8
17	32490	(000000-)	Washer, Flat, 0.25, Std	1
18	1037346	(000000-)	Screw, Hex, M8 X 1.25 X 25, 9.8, Sems	6
19	1037358	(000000-)	Screw, Hex, M10 X 1.50 X 35, 9.8, Sems	6
20	07792	(000000-)	Nut, Hex, Flng, M10 X 1.50	2
21	361339	(000000-)	Screw, Hex, M6 X 1.00 X 16, Fmg	2

Fig. 15 - Engine Fuel Tank Group

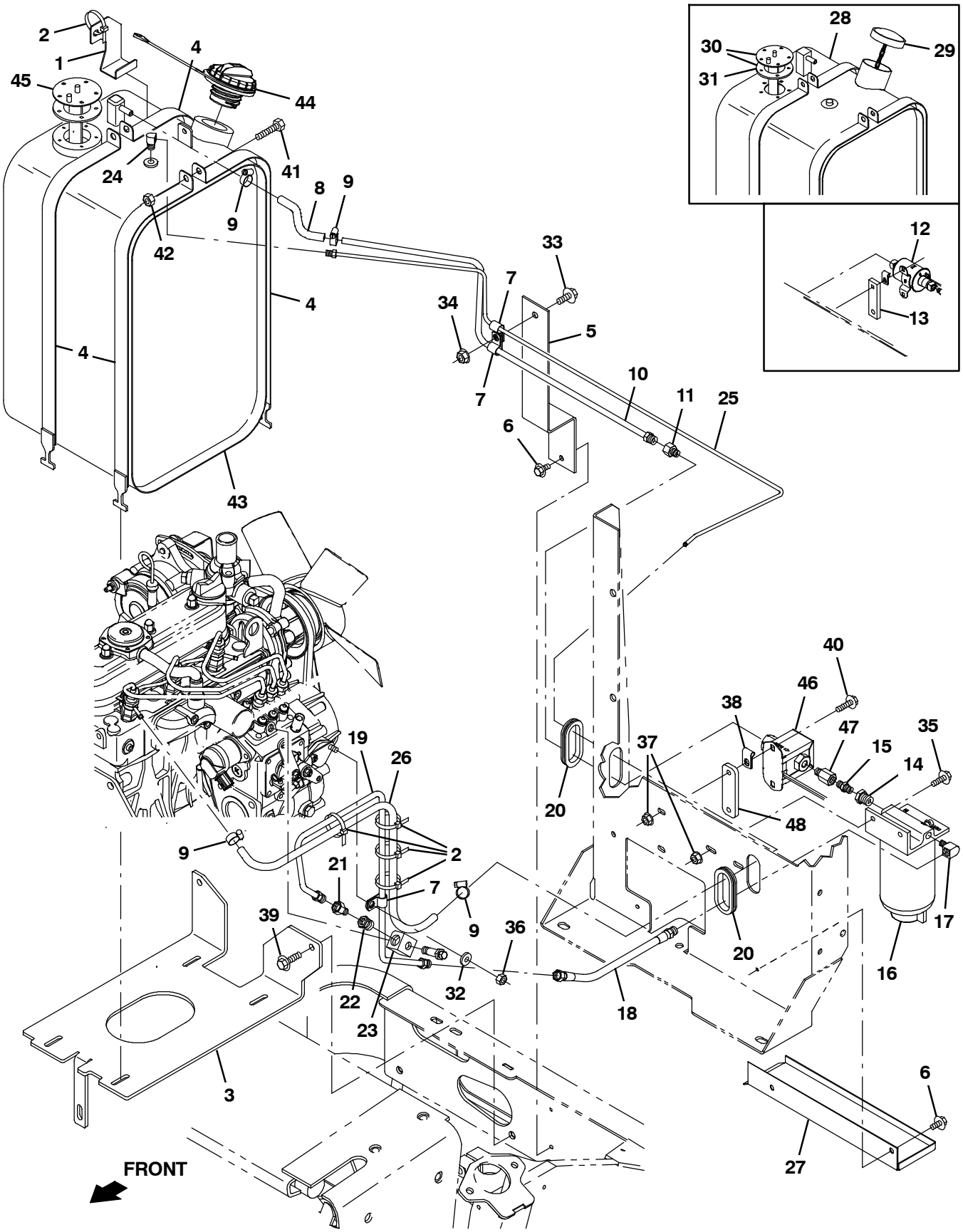

354943 - D, NA

Fig. 15 - Engine Fuel Tank Group

	Ref.	Part No.	Serial Number	Description	Qty.
	1	1052585	(000000-)	Bracket, Mtg, Wire	1
	2	49266	(000000-)	Tie, Cable, Nyl, 07.3l .19w 1.8 Max D	5
	3	1048787	(000000- 005510)	Bracket, Mtg, Tank, Fuel	1
	3	1075431	(005511-)	Bracket, Mtg, Tank, Fuel	1
	4	1049580	(000000-)	Strap Wldt, Tank	4
	5	1048789	(000000-)	Bracket, Sppt, Fuelline	1
	6	74455	(000000-)	Screw, Hex, M6 X 1.00 X 12, Fmg	4
	7	40678	(000000-)	Clamp, Cable, Stl, 0.44d X 0.62w, 1hole	3
	8	81584	(000000-)	Hose, Fuel, 0.31id, 05.0l	1
	9	43844	(000000-)	Clamp, Hose, Wormdrive, 0.25- 0.62d, .31w	4
	10	360836	(000000-)	Fuelline, .31d 05if/ Stl	1
	11	40585	(000000-)	Fitting, Brs, Str, If05/Pm02	1
	12	9020940	(000000- 007159)	Pump Kit, Fuel, Replmt	1
	13	364779	(000000- 007159)	Bar, Flat, Stl 0.38, 01.00 X 03.3l	1
	14	17414	(000000-)	Fitting, Hyd, Str, Pf02/Pm04	1
	15	47566	(000000-)	Fitting, Hyd, Str, Pm02/Pm02	1
▽	16	1016827	(000000-)	Filter Assy, Fuel, Dsl	1
▲		1017126	(000000-)	Element, Fltr, Fuel [Dn]	1
	17	15555- 2	(000000-)	Fitting, Brs, E90, If05/Pm04	1
	18	70173	(000000-)	Hose, 0050, 04, If05str / Im05str, 10.0	1
	19	360837	(000000-)	Fuelline, .31d 05if/05if, Stl	1
	20	54345	(000000-)	Grommet, Rbr, 1.62id, F/1.9h, .13 Matl	2
	21	40585	(000000-)	Fitting, Brs, Str, If05/Pm02	1
	22	24698	(000000-)	Fitting, Brs, Str, Pf02/Pm06	1
	23	360872	(000000-)	Fitting, Banjo, Fuel	1
	24	53078	(000000-)	Fitting, Brs, E90, If03/Pm02	1
	25	1048865	(000000-)	Fuelline, Return, Stl	1
	26	87738	(000000-)	Hose, Fuel, 0.18id, 29.0l	1
	27	1048791	(000000-)	Channel, Shield, Fuel Drip	1
▽	28	1055164	(000000- 002099)	Tank, Fuel, 07.3gal, 10.53w 18.6hi 11.0l	1
▲	29	69899	(000000- 002099)	Cap, Tank, Fuel, 2.3neck 2.6d W/ Chain	1
▲▽	30	1047703	(000000- 002099)	Send- Unit, 90 Ohm	1
▲▲	31	14131	(000000- 002099)	Gasket, Sender, Fuel, 2.7d 1.5b 5/ 2.1bc	1
	32	19066	(000000-)	Washer, Flat, 10	1
	33	1037346	(000000-)	Screw, Hex, M8 X 1.25 X 25, 9.8, Sems	1
	34	07791	(000000-)	Nut, Hex, Flng, M8 X 1.25	2
	35	1036892	(000000-)	Screw, Hex, M6 X 1.00 X 25, 9.8 Sems	2
	36	08708	(000000-)	Nut, Hex, Lock, M6 X 1.00, Nl	1
	37	07790	(000000-)	Nut, Hex, Flng, M6 X 1.00	4
	38	46236	(000000-)	Clamp, Cable, Stl, 0.25d X 0.56w, 1hole	1
	39	1037354	(000000-)	Screw, Hex, M8 X 1.25 X 30, 9.8, Sems	3
	40	1037345	(000000-)	Screw, Hex, M6 X 1.00 X 30, 9.8, Sems	2
	41	41342	(000000-)	Screw, Hex, M8 X 1.25 X 40, 8.8	2
	42	08709	(000000-)	Nut, Hex, Lock, M8 X 1.25, Nl	2
▽	43	1058574	(002100-)	Tank, Fuel, 06.9gal, 10.53w 18.6hi 10.0l	1
▲	44	1032812	(002100-)	Cap, Fuel, Tank	1
▲	45	1067558	(002100-)	Send- Unit, Fuel, 90 Ohm	1
	46	1251982	(007160-)	Pump, Fuel	1
	47	1076774	(007160-)	Fitting, Extension 1/8- Npsf X 20	1
	48	1252042	(007160-)	Bar, Flat, Stl 0.25, 01.00 X 03.3l	1

Fig. 16 - Engine Muffler Group

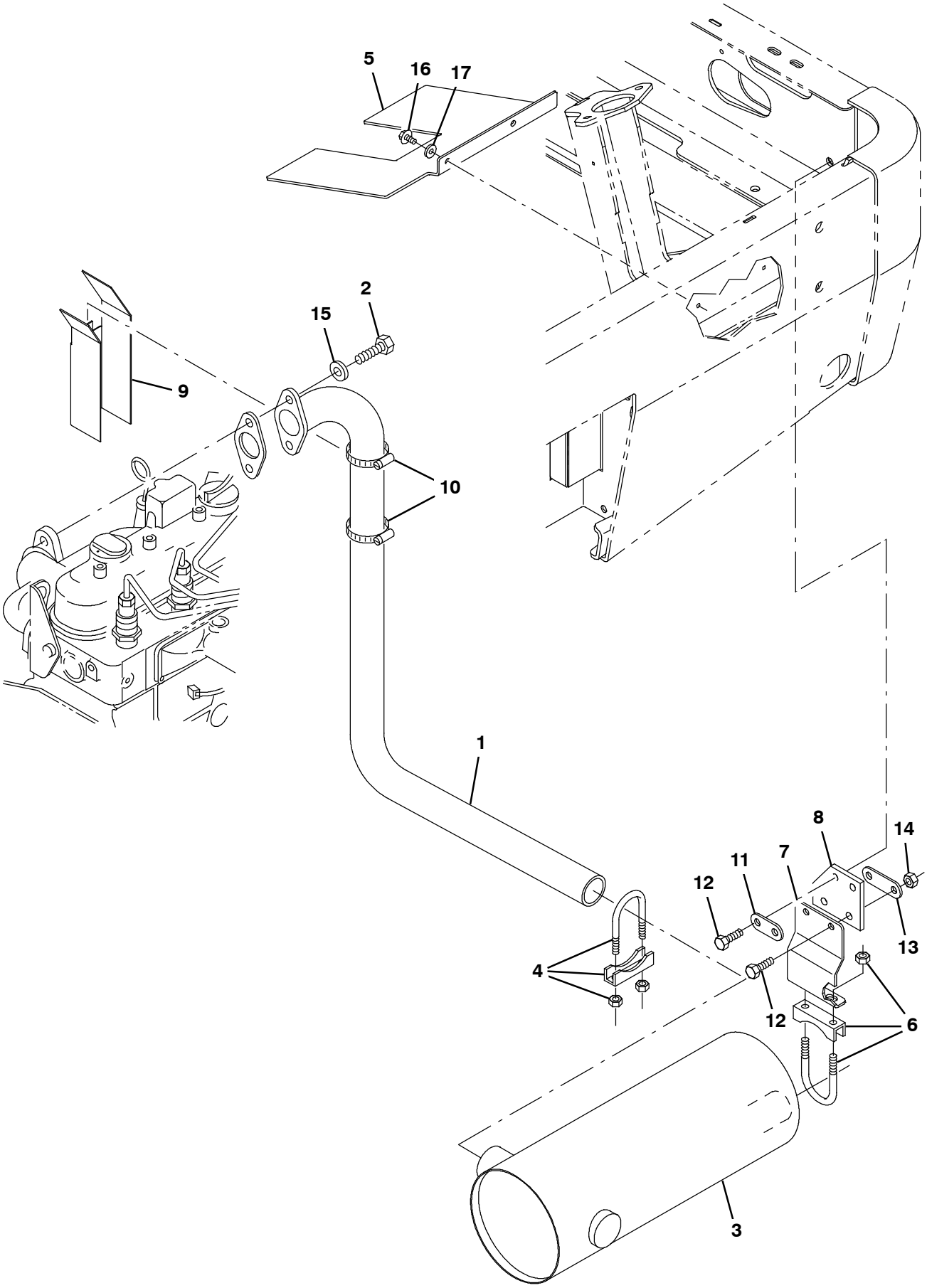

354944 - D, NA

Fig. 16 - Engine Muffler Group

Ref.	Part No.	Serial Number	Description	Qty.
1	360367	(000000-)	Tube Wldt, Exhaust, 1.6d, 2 Hole Flng	1
2	58286	(000000-)	Screw, Hex, M10 X 1.25 X 20, 8.8	2
3	360372	(000000-)	Muffler, Exhaust	1
4	24012-1	(000000-)	Clamp, Muffler, 1.75d	1
5	1048733	(000000-)	Plate, Shield, Exhaust	1
6	23694	(000000-)	Clamp, Muffler, 1.38D	1
7	1048843	(000000-)	Angle, Mtg, Muffler	1
8	1057564	(000000-)	Isolator, Vib, Exhaust, 0.3 2.7w 3.2w	1
9	360972	(000000-)	Guard, Exhaust	1
10	11531	(000000-)	Clamp, Hose, Wormdrive, 1.06-2.00d, .56w	2
11	1057578	(000000-)	Plate, Mtg, Isolator	1
12	39277	(000000-)	Screw, Hex, M8 X 1.25 X 25, 8.8	4
13	1057581	(000000-)	Plate, Mtg, Isolator	1
14	08709	(000000-)	Nut, Hex, Lock, M8 X 1.25, Nl	2
15	32485	(000000-)	Washer, Flat, 0.38, Sae	2
16	361339	(000000-)	Screw, Hex, M6 X 1.00 X 16, Fmg	2
17	32490	(000000-)	Washer, Flat, 0.25, Std	2

Fig. 17 - Engine Battery Group

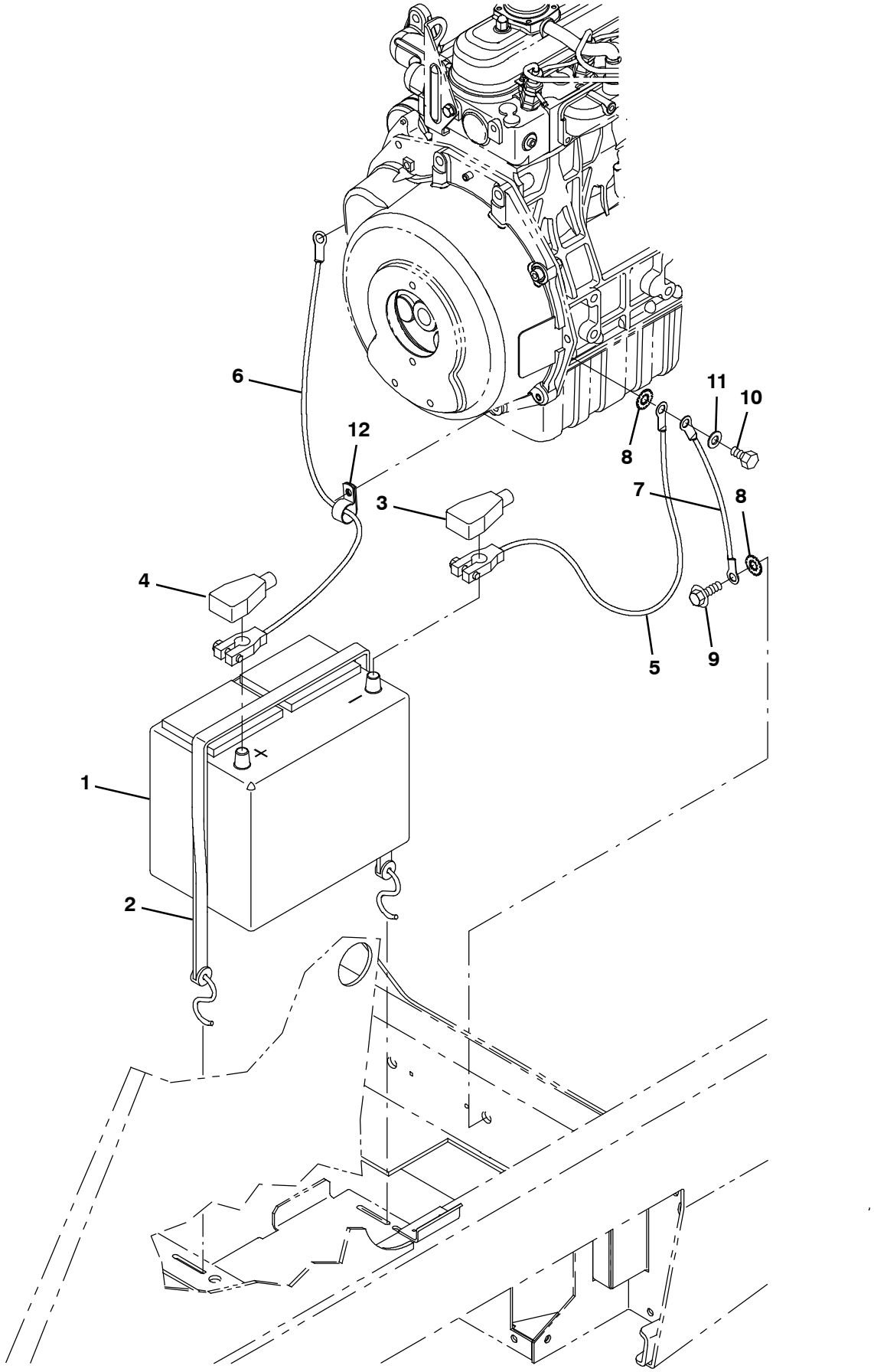

354945 - D

Fig. 17 - Engine Battery Group

Ref.	Part No.	Serial Number	Description	Qty.
1	10143	(000000-)	Battery, Wet, 12vdc 0600cca	1
2	33671	(000000-)	Strap, Rbr, Tie- Down, 19.0l, 2/ Hook	1
3	68872	(000000-)	Boot, Terminal, Battery, 02- 01ga, Blk	1
4	68873	(000000-)	Boot, Terminal, Battery, 02- 01ga, Red	1
5	360819	(000000-)	Cable, Battery, 04ga 22.0l Blk .41ring	1
6	31258	(000000-)	Cable, Battery, 04ga 38.0l Red .41ring	1
7	29832- 5	(000000-)	Cable, 04ga 11.0l Blk .41ring /.41ring	1
8	41142	(000000-)	Washer, Lock, Int- Ext, 0.38	2
9	1037358	(000000-)	Screw, Hex, M10 X 1.50 X 35, 9.8, Sems	1
10	58286	(000000-)	Screw, Hex, M10 X 1.25 X 20, 8.8	1
11	32485	(000000-)	Washer, Flat, 0.38, Sae	1
12	40678- 1	(000000-)	Clamp, Cable, Stl, 0.88d X 0.62w, 1hole	1

Fig. 18 - Directional Pedal Group

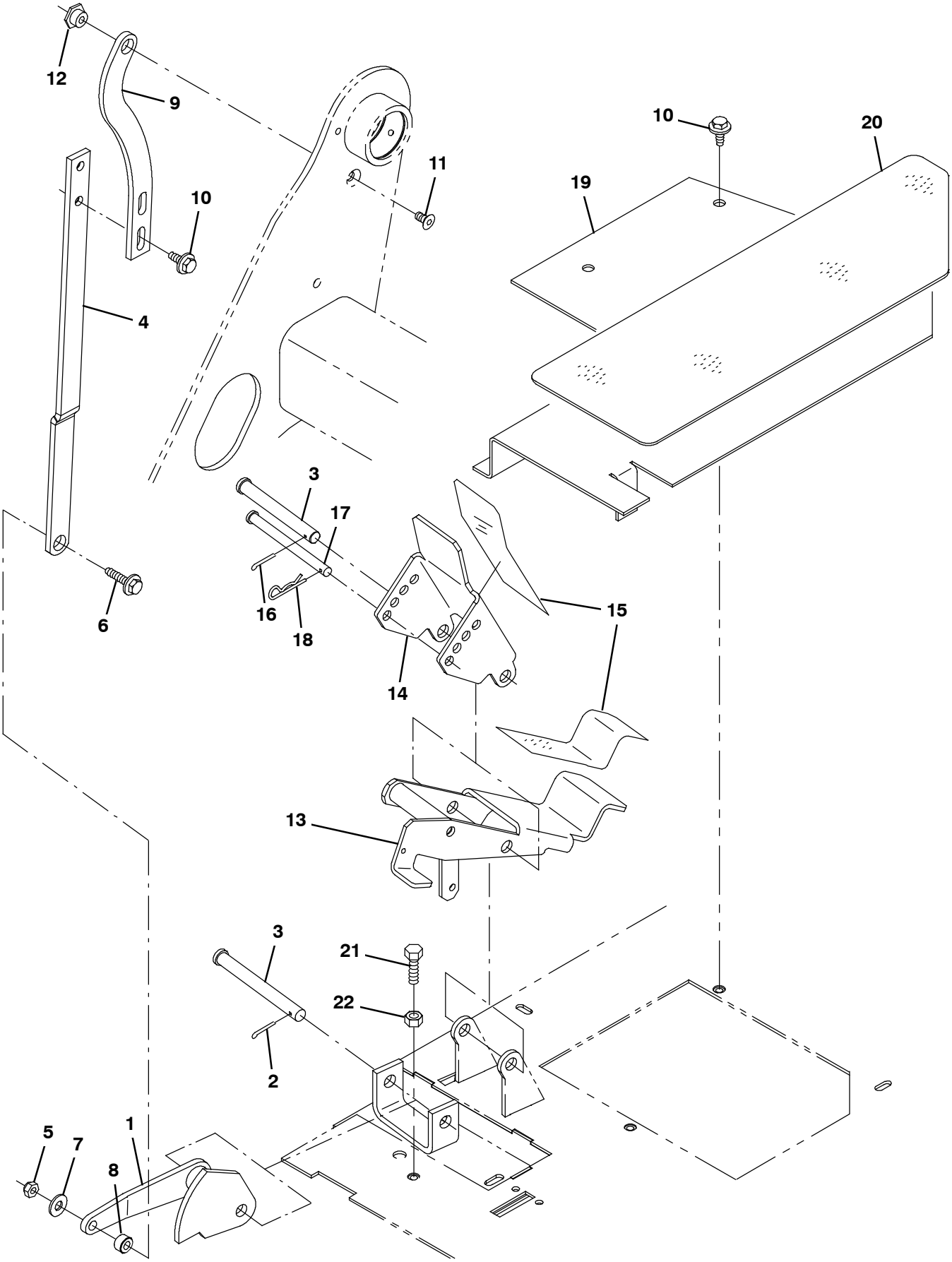

354928 - IC

Fig. 18 - Directional Pedal Group

Ref.	Part No.	Serial Number	Description	Qty.
1	1052559	(000000-)	Cam Wldt, Limiter, Spd	1
2	08346	(000000-)	Pin, Cotter, .125 X 0.75	1
3	222196	(000000-)	Pin, Clevis, 0.50d X 4.25l	2
4	1052558	(000000-)	Link, 0.25, 1.0w 18.06l, 1/0.6h 2/ M8	1
5	08709	(000000-)	Nut, Hex, Lock, M8 X 1.25, Nl	1
6	1037355	(000000-)	Screw, Hex, M8 X 1.25 X 35, 9.8, Sems	1
7	32491	(000000-)	Washer, Flat, 0.31, Std	1
8	360460	(000000-)	Sleeve, P/M, 0.34b 0.63d 0.4l, Ss / Oil	1
9	1052557	(000000-)	Link, Limiter, Spd	1
10	1037346	(000000-)	Screw, Hex, M8 X 1.25 X 25, 9.8, Sems	4
11	360821	(000000-)	Screw, Flt, Soc, M8 X 1.25 X 16, 10.9	1
12	360840	(000000-)	Spacer	1
13	1052553	(000000-)	Pedal Wldt, Propel, Lower	1
14	1052550	(000000-)	Pedal, Propel, Upper	1
15	75430	(000000-)	Tread, Non- Skid, 02.2w 15.5l	1
16	08182	(000000-)	Pin, Cotter, .125 X 1.00	1
17	59672	(000000-)	Pin, Clevis, 0.37d X 4.50l	1
18	97163	(000000-)	Pin, Cotter, Hair, 13mmd 3mm Wir	1
19	1048508	(000000-)	Cover, Plt, Floor	1
20	360906	(000000-)	Tread, Non- Skid, 06.5w 20.6l	1
21	76570	(000000-)	Screw, Hex, M8 X 1.25 X 30, 8.8	1
22	07791	(000000-)	Nut, Hex, Flng, M8 X 1.25	1

Fig. 19 - Wheel and Brake Group, Front

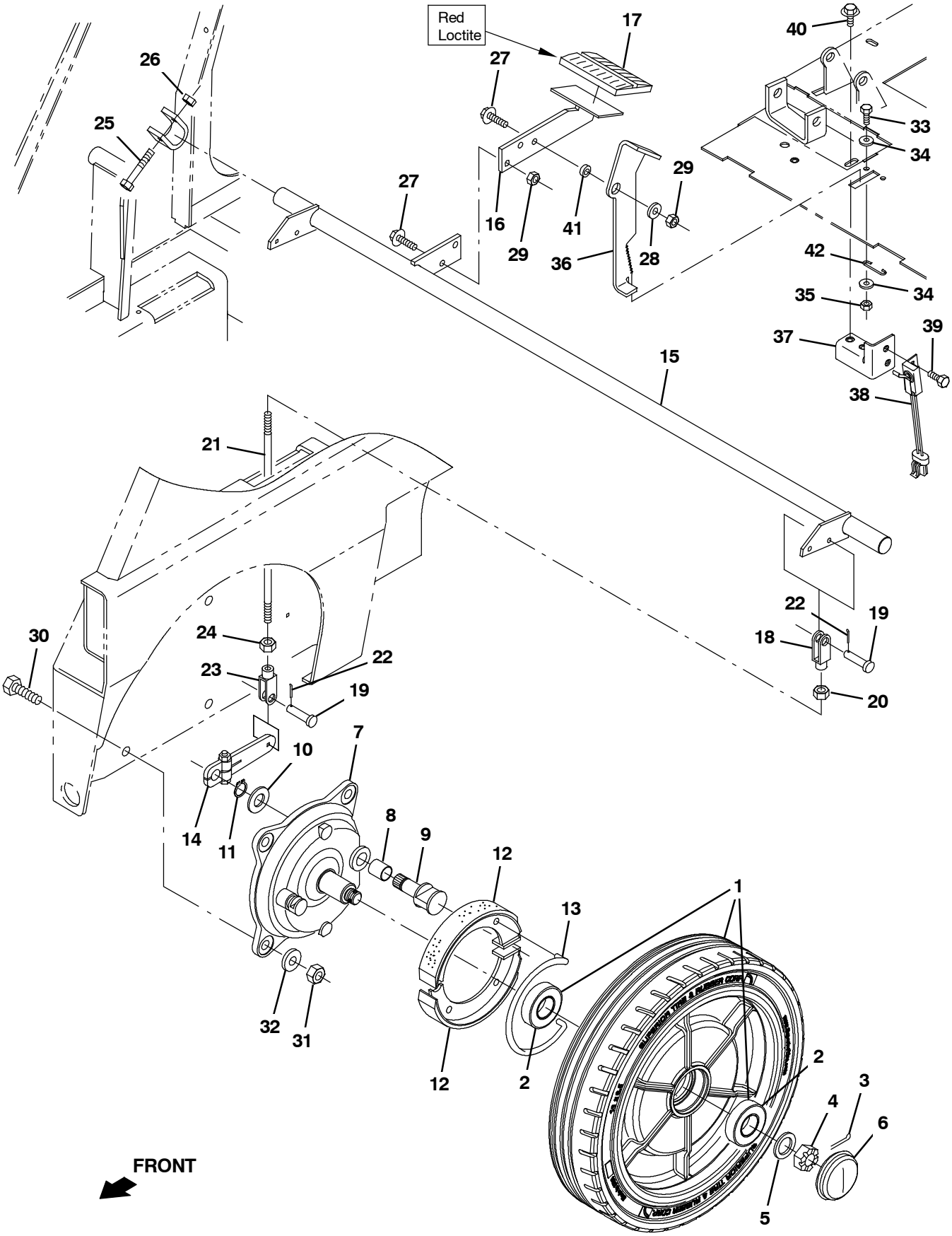

354955 - IC

Fig. 19 - Wheel and Brake Group, Front

	Ref.	Part No.	Serial Number	Description	Qty.
▽	1	1076240	(000000-)	Tire Assy, Idler, 16.0 X 3.5, Rubber	2
▲	2	360074	(000000-)	Bearing, Ball, 1.18b 2.44d 0.63w	2
	3	08182	(000000-)	Pin, Cotter, .125 X 1.00	2
	4	86659	(000000-)	Nut, Hex, Sltd, .75- 16	2
	5	49145	(000000-)	Washer, Flat, 0.76b 1.50d .06, Ss	2
	6	54390	(000000-)	Cap, Hub, Dust, 2.57d 0.77l	2
▽		360023	(000000-)	Brake Assy	2
▲	7	360270	(000000-)	Plate, Backing, Brake	1
▲	8	360271	(000000-)	Bushing, Sleeve, 0.78b 0.86d 0.93l, Bnz	1
▲	9	360272	(000000-)	Cam, Plt, Brake [Nickel]	1
▲	10	360273	(000000-)	Washer, Flat, M21.0b X 37d X 3	1
▲	11	360274	(000000-)	Retainer, Ring, Brake	1
▲	12	360275	(000000-)	Shoe, Brake, 180 X 30mm	2
▲	13	360276	(000000-)	Spring, Wir, 0.25d, Brake Return	1
	14	360802	(000000-)	Arm, Lever, Brake, 4.1 [Knott]	2
	15	1052114	(000000-)	Shaft Wldt, Brush	1
	16	1052113	(000000-)	Pedal Wldt, Brake	1
	17	51109	(000000-)	Pad, Pedal, Brake, 3.96l 2.36w 0.75	1
▽		9019140	(000000-)	Brake Kit, Linkage Ci [S20]	2
▲	18	14595- 1	(000000-)	Clevis, Adj, 0.25pin, 0.25- 28 Rh, Pl	1
▲	19	14605	(000000-)	Pin, Clevis, 0.25d X 0.75l	2
▲	20	32899	(000000-)	Nut, Hex, Jam, .25- 28	1
▲	21	1247287	(000000-)	Rod, Thrd, 2 End, .25- 28 16.00l	1
▲	22	08170	(000000-)	Pin, Cotter, .062 X 0.50	2
▲	23	364864	(000000-)	Clevis, Adj, 0.25pin, 0.25- 28 Lh, Pl	1
▲	24	364948	(000000-)	Nut, Hex, Std, .25- 28, Lh	1
	25	06949	(000000-)	Screw, Hex, M6 X 1.00 X 50, 8.8	2
	26	08708	(000000-)	Nut, Hex, Lock, M6 X 1.00, Nl	2
	27	1037355	(000000-)	Screw, Hex, M8 X 1.25 X 35, 9.8, Sems	3
	28	32491	(000000-)	Washer, Flat, 0.31, Std	1
	29	08709	(000000-)	Nut, Hex, Lock, M8 X 1.25, Nl	3
	30	06968	(000000-)	Screw, Hex, M12 X 1.75 X 35, 8.8	8
	31	08711	(000000-)	Nut, Hex, Lock, M12 X 1.75, Nl	8
	32	32486	(000000-)	Washer Flat,0.50,Sae	8
	33	1054875	(000000-)	Screw, Hex, M5 X 1.0 X 16, Blk	2
	34	19066	(000000-)	Washer, Flat, 10	4
	35	06549	(000000-)	Nut, Hex, Lock, M5 X 0.80, Nl	2
	36	1046553	(000000-)	Lever, Stop, Brake	1
	37	1048142	(000000-)	Bracket, Switch, Brake	1
	38	1039735	(000000-)	Switch, Snap, 15a No	1
	39	87308	(000000-)	Screw, Hex, M6 X 1.00 X 12, 8.8	2
	40	1020341	(000000-)	Screw, Hex, M8 X 1.25 X 20, Ss, Sems	2
	41	1052263	(000000-)	Tube, 0.34id 0.62od 00.2l, Stl	1
	42	71367	(000000-)	Spring, Wir, 0.08d, Parking Brake	1

Fig. 20 - Wheel Group, Rear Drive

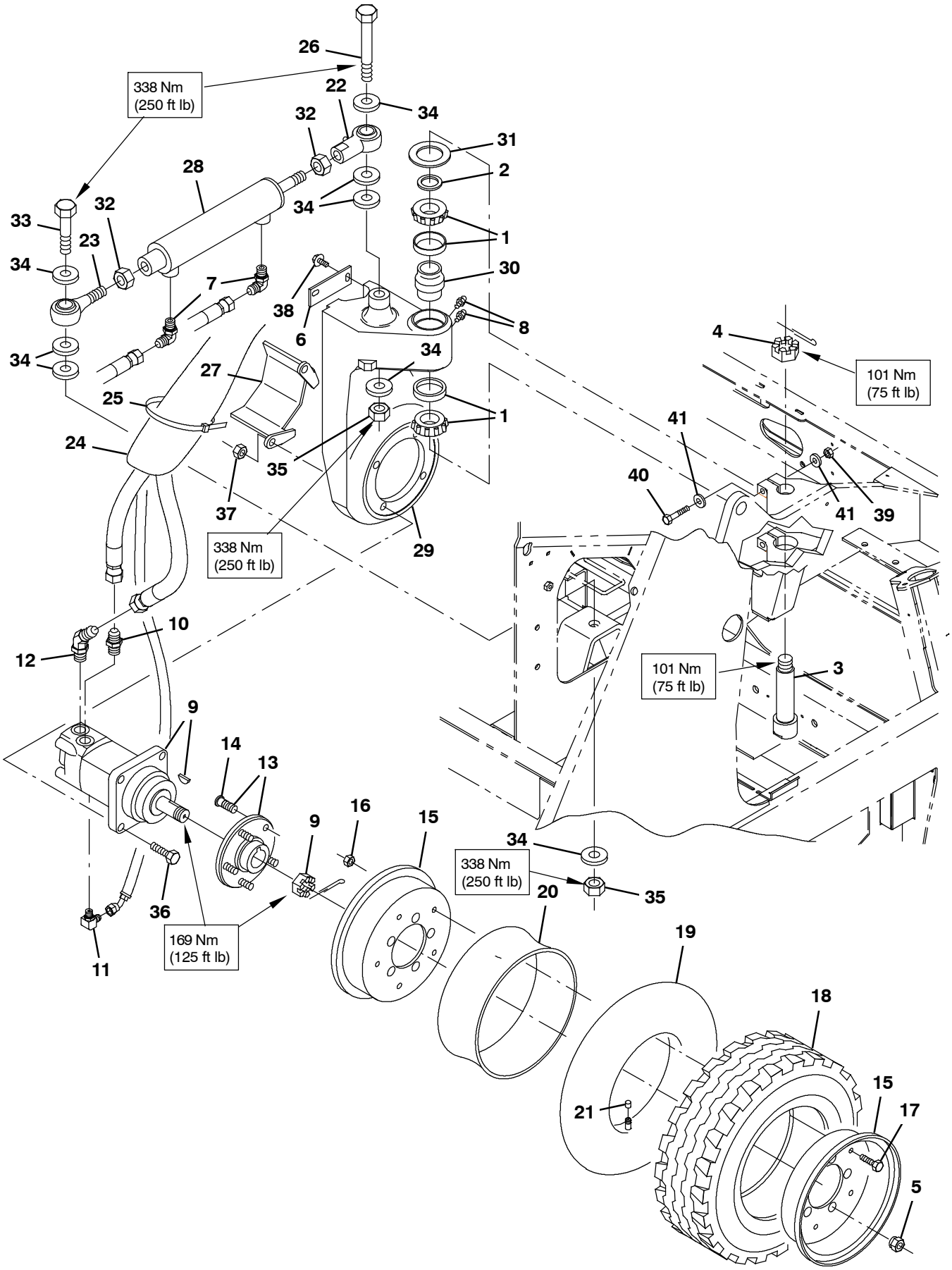

354956 - IC, NA

Fig. 20 - Wheel Group, Rear Drive

	Ref.	Part No.	Serial Number	Description	Qty.
	1	49225	(000000-)	Bearing Assy, 2.33d 1.25b Cup / Cone Kit	2
	2	47719	(000000-)	Washer, Flat, 1.26b 1.88d .13, Stl	1
	3	364861	(000000-)	Bolt, Shld 1.25d X 4.45l,1.0- 20 Drilled	1
	4	14242	(000000-)	Nut, Hex, Sltd, 1.00- 20	1
	5	24339	(000000-)	Nut, Wheel, .50- 20 X 60 Angle	5
	6	1052521	(000000-)	Bar, Flat, Stl 0.19, 01.50 X 04.1l	1
	7	56820	(000000- 002999)	Fitting, Hyd, E90, Jm06/Om06	2
	7	762432	(003000-)	Fitting, Hyd, E90, Fm06/Om06	2
	8	47801	(000000-)	Fitting, Grease, Str Pm04 .63l	2
	9	374559	(000000-)	Motor, Hyd, Gear, Int 18.7 Bi- Dir 3000 (See Breakdowns)	1
	10	46480	(000000- 002999)	Fitting, Hyd, Str, Jm10/Om10	1
	10	762463	(003000-)	Fitting, Hyd, Str, Fm10/Om10	1
	11	77097	(000000- 002999)	Fitting, Hyd, E90, Jm04/Om04	1
	11	762427	(003000-)	Fitting, Hyd, E90, Fm04/Om04	1
	12	44936	(000000- 002999)	Fitting, Hyd, E45, Jm10/Om10	1
	12	762465	(003000-)	Fitting, Hyd, E45, Fm10/Om10	1
▽	13	1052522	(000000-)	Hub Assy, Wheel, 5 Bolt 4.50bc 1.5 Taper	1
▲	14	32126	(000000-)	Stud, Wheel, .50- 20 X 1.50l, 0.370th	5
▽		360769	(000000-)	Tire Assy, Pneu, 150/75- 08 4.5bc 5bolt	1
▲	15	366104	(000000-)	Rim Assy, 08.0 X 4.3, 4.5bc /5bolt	1
▲	16	08714	(000000-)	Nut, Hex, Lock, M10 X 1.5, Nl, Ss	5
▲	17	39283	(000000-)	Screw, Hex, M10 X 1.50 X 25, 8.8	5
▲▽		366094	(000000-)	Tire, Pneu, 16x6.0x08 [With Tube & Flap]	1
▲▲	18	361081	(000000-)	Tire, Pneu, 16x6.0x08, 10ply [1c12]	1
▲▲	19	361077	(000000-)	Innertube, 16 X 6- 8	1
▲▲	20	366092	(000000-)	Flap, Tire, 8.00 [Zf500]	1
▲	21	45786	(000000-)	Cap, Valve, Tire, Tubeless [Schrader]	1
	22	64887	(000000-)	Rod- End, 0.75- 16rh Fem 0.75b	1
	23	64886	(000000-)	Rod- End, 0.75- 16rh Mal 0.75b [Teflon]	1
	24	34329	(000000-)	Sleeve, Nyl, 1.81id 20.0l	1
	25	49266	(000000-)	Tie, Cable, Nyl, 07.3l .19w 1.8 Max D	1
	26	360152	(000000-)	Screw, Hex, .75- 10 X 5.00, G5	1
	27	1052523	(000000-)	Bracket, Motor, Drive	1
	28	1028492	(000000-)	Cylinder, Hyd, 2.0b 15.0l 08.00strk 1500	1
	29	364863	(000000-)	Housing, Sppt, Drive, Rear	1
	30	364826	(000000-)	Seal, Grease Cav	1
	31	364827	(000000-)	Washer, Flat, 1.91b 3.00d .16, Felt	1
	32	35886	(000000-)	Nut, Hex, Jam, .75- 16	2
	33	58056	(000000-)	Screw, Hex, .75- 10 X 3.00, G5	1
	34	39350	(000000-)	Washer, Flat, 0.75, Sae	8
	35	32987	(000000-)	Nut, Hex, Lock, .75- 10, Nl	2
	36	06972	(000000-)	Screw, Hex, M12 X 1.75 X 60, 8.8	4
	37	08711	(000000-)	Nut, Hex, Lock, M12 X 1.75, Nl	4
	38	1037346	(000000-)	Screw, Hex, M8 X 1.25 X 25, 9.8, Sems	2
	39	41430	(000000-)	Nut, Hex, Lock, M10 X 1.5, Nl	2
	40	06964	(000000-)	Screw, Hex, M10 X 1.50 X 70, 8.8	2
	41	32485	(000000-)	Washer, Flat, 0.38, Sae	4

Fig. 21 - Brush Lift Group, Main

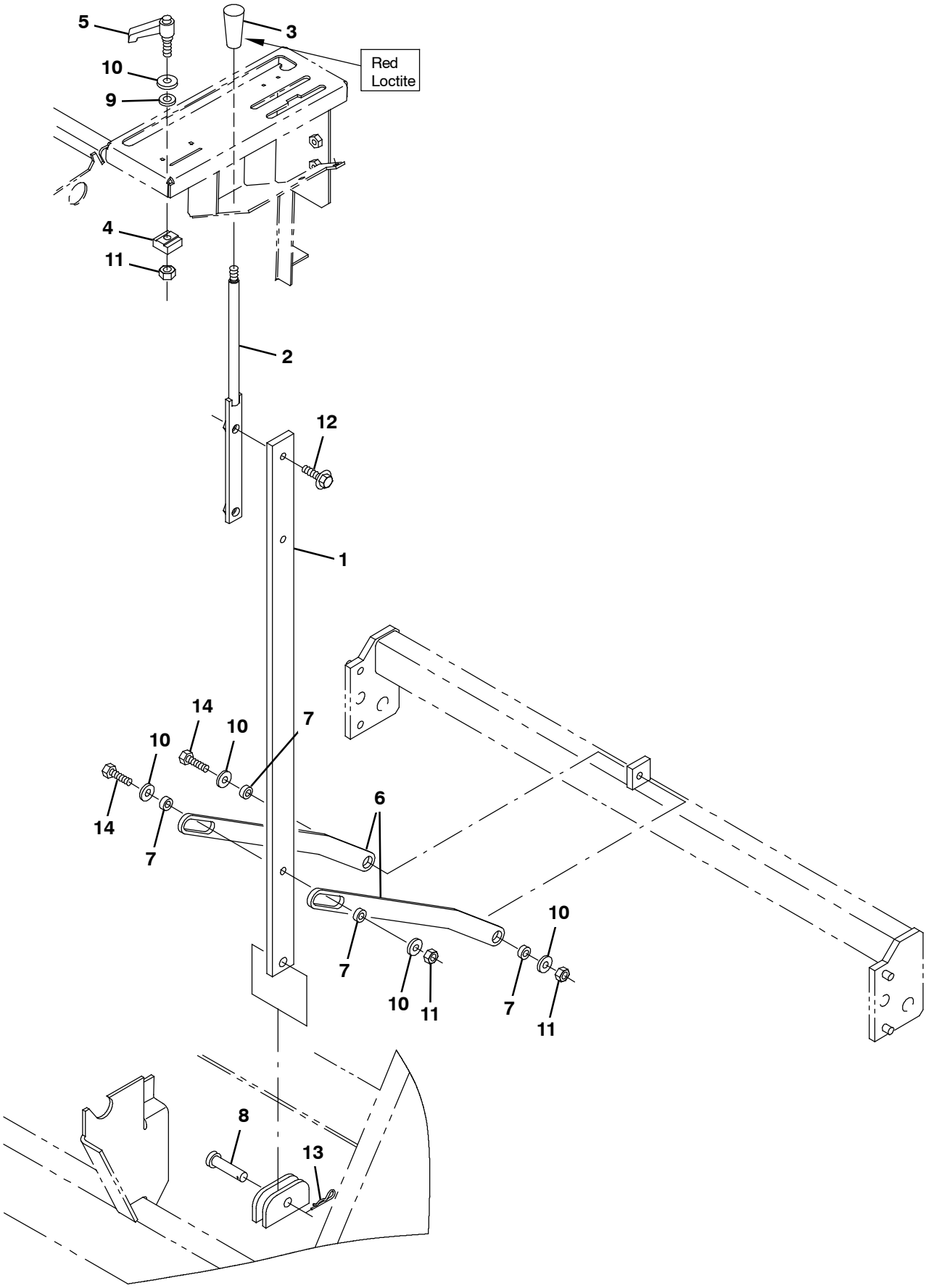

354957 - ALL

Fig. 21 - Brush Lift Group, Main

Ref.	Part No.	Serial Number	Description	Qty.
1	1048801	(000000-)	Lever, Brush Lift	1
2	1055049	(000000-)	Handle Wldt, Lift, Brush	1
3	54995	(000000-)	Knob, 1.12d 3.86l M10 X 1.5, Plstc Tpr]	1
4	360774	(000000-)	Block, Adj	1
5	375020	(000000-)	Lever, Adj, Plstc	1
6	1076300	(000000-)	Link, Lift, Main Brush	2
7	360460	(000000-)	Sleeve, P/M, 0.34b 0.63d 0.4l, Ss / Oil	4
8	51529	(000000-)	Pin, Clevis, 0.50d X 1.25l	1
9	1055074	(000000-)	Washer, Sealing, M8	1
10	32491	(000000-)	Washer, Flat, 0.31, Std	5
11	08709	(000000-)	Nut, Hex, Lock, M8 X 1.25, Nl	3
12	1037354	(000000-)	Screw, Hex, M8 X 1.25 X 30, 9.8, Sems	2
13	44906	(000000-)	Pin, Cotter, Hair, 0.38d .093 Wir	1
14	06956	(000000-)	Screw, Hex, M8 X 1.25 X 45, 8.8	2

Fig. 22 - Brush Drive Group, Main

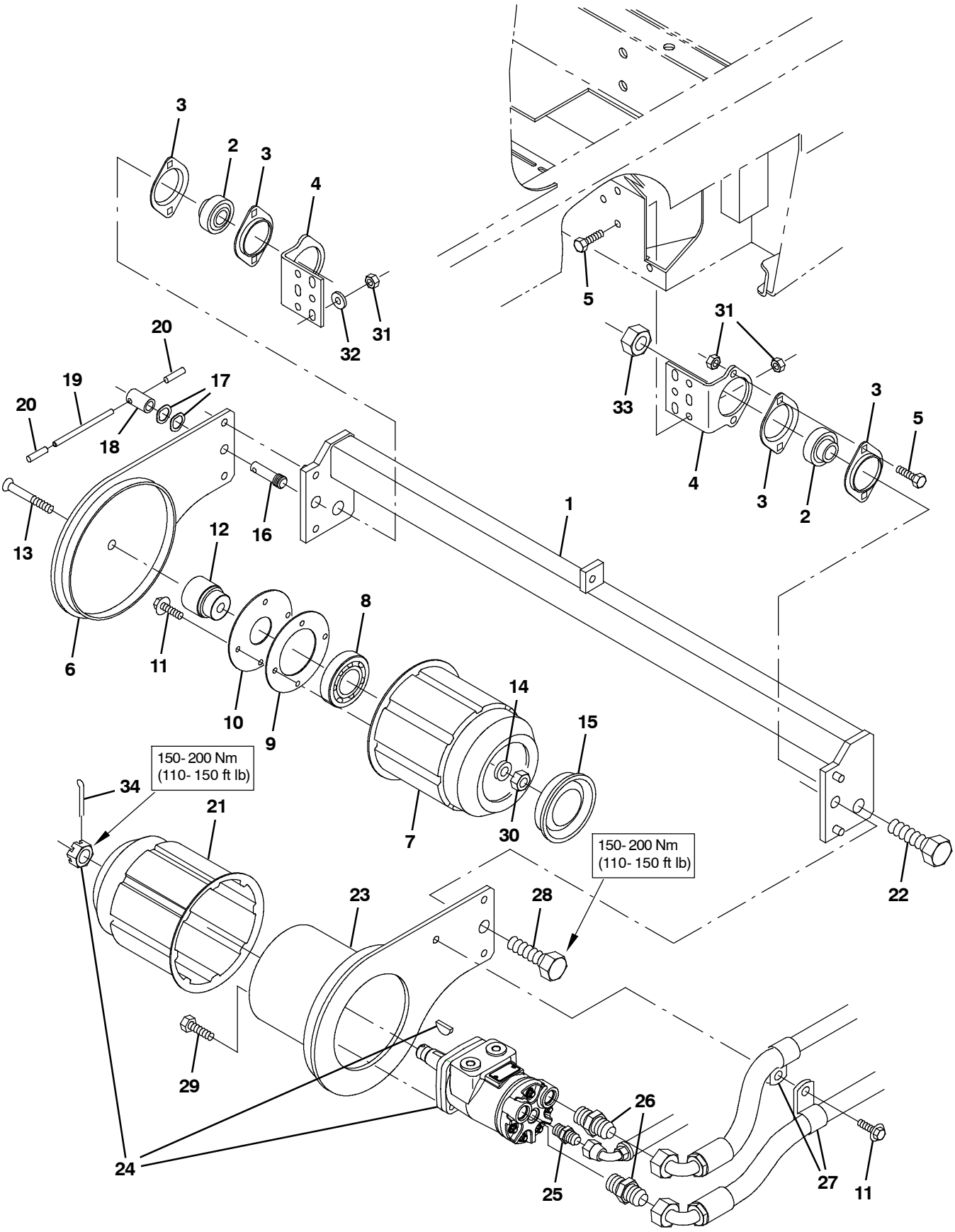

354958 - IC, NA

Fig. 22 - Brush Drive Group, Main

	Ref.	Part No.	Serial Number	Description	Qty.
	1	1048800	(000000-)	Tube Wldt, Torque	1
	2	25887	(000000-)	Bearing, W/ Collar, 0.75b 1.85d 1.06w	2
	3	35973	(000000-)	Flange, Brg, 1.9id 2h	4
	4	1048744	(000000-)	Bracket, Angle, Mtg, Brg	2
	5	09740	(000000-)	Screw, Hex, M8 X 1.25 X 20, Ss	10
	6	1054045	(000000-)	Arm Wldt, Brush, Main, Idler	1
	7	55779	(000000-)	Plug Wldt, Idler, Brush	1
	8	24899	(000000-)	Bearing, Ball, 1.38b 2.83d 0.67w	1
	9	30252	(000000-)	Disc, 0.08, 04.39d 02.56b, 4/.28h 3.8bc	1
	10	30253	(000000-)	Disc, 0.06, 04.39d 01.67b, 4/.30h 3.8bc	1
	11	1036892	(000000-)	Screw, Hex, M6 X 1.00 X 25, 9.8 Sems	5
	12	30251	(000000-)	Shaft, Idler, Plug, Brush	1
	13	361555	(000000-)	Screw, Flt, M12 X 1.75 X 80, 10.9	1
	14	51564	(000000-)	Washer, Flat, 0.53b 1.75d .12, Stl, Pl	1
	15	30255	(000000-)	Cap, Vinyl, 3.28d 0.45l	1
	16	360110	(000000-)	Stud, Spcl	1
	17	52508	(000000-)	Washer, Wavy, 0.53b 0.81d .09	2
	18	360109	(000000-)	Bar, Hex, Stl 0.75, 01.6l .50h Thru	1
	19	11631	(000000-)	Pin, Roll, .250d X 3.50l, .250/.256	1
	20	360492	(000000-)	Cap, Vinyl, 0.23id, 1.50l	2
	21	87631	(000000- 002395)	Plug Wldt, Drive, Brush	1
	21	1057643	(002396-)	Plug Wldt, Drive, Brush	1
	22	39395	(000000-)	Screw, Hex, .75- 10 X 2.50, Fl	2
	23	360349	(000000-)	Arm Wldt, Brush, Main, Drive	1
	24	361021	(000000- 002395)	Motor, Hyd, Gear, Int 02.2 Bi- Dir 1500 (See Breakdowns)	1
▽	24	1068806	(002396-)	Motor, Hyd, Gear, Int 02.2 Bi- Dir 1500	1
▲		22615	(002396-)	Seal Kit, Motor [Cl]	1
	25	55586	(000000- 002999)	Fitting, Hyd, Str, Jm04/Om04	1
	25	762428	(003000-)	Fitting, Hyd, Str, Fm04/Om04	1
	26	52402	(000000- 002999)	Fitting, Hyd, Str, Jm06/Om08	2
	26	762438	(003000-)	Fitting, Hyd, Str, Fm06/Om08	2
	27	67767	(000000-)	Clamp, Cable, Stl, 0.69d X 0.62w, 1hole	2
	28	06977	(000000-)	Screw, Hex, M16 X 2.00 X 20, 8.8	1
	29	01762	(000000-)	Screw, Hex, .38- 16 X 0.75, Nl	4
	30	08711	(000000-)	Nut, Hex, Lock, M12 X 1.75, Nl	1
	31	08709	(000000-)	Nut, Hex, Lock, M8 X 1.25, Nl	10
	32	32491	(000000-)	Washer, Flat, 0.31, Std	3
	33	32987	(000000-)	Nut, Hex, Lock, .75- 10, Nl	2
	34	08175	(000000-)	Pin, Cotter, .125 X 1.25	1

Fig. 23 - Brush Lift Group, Side

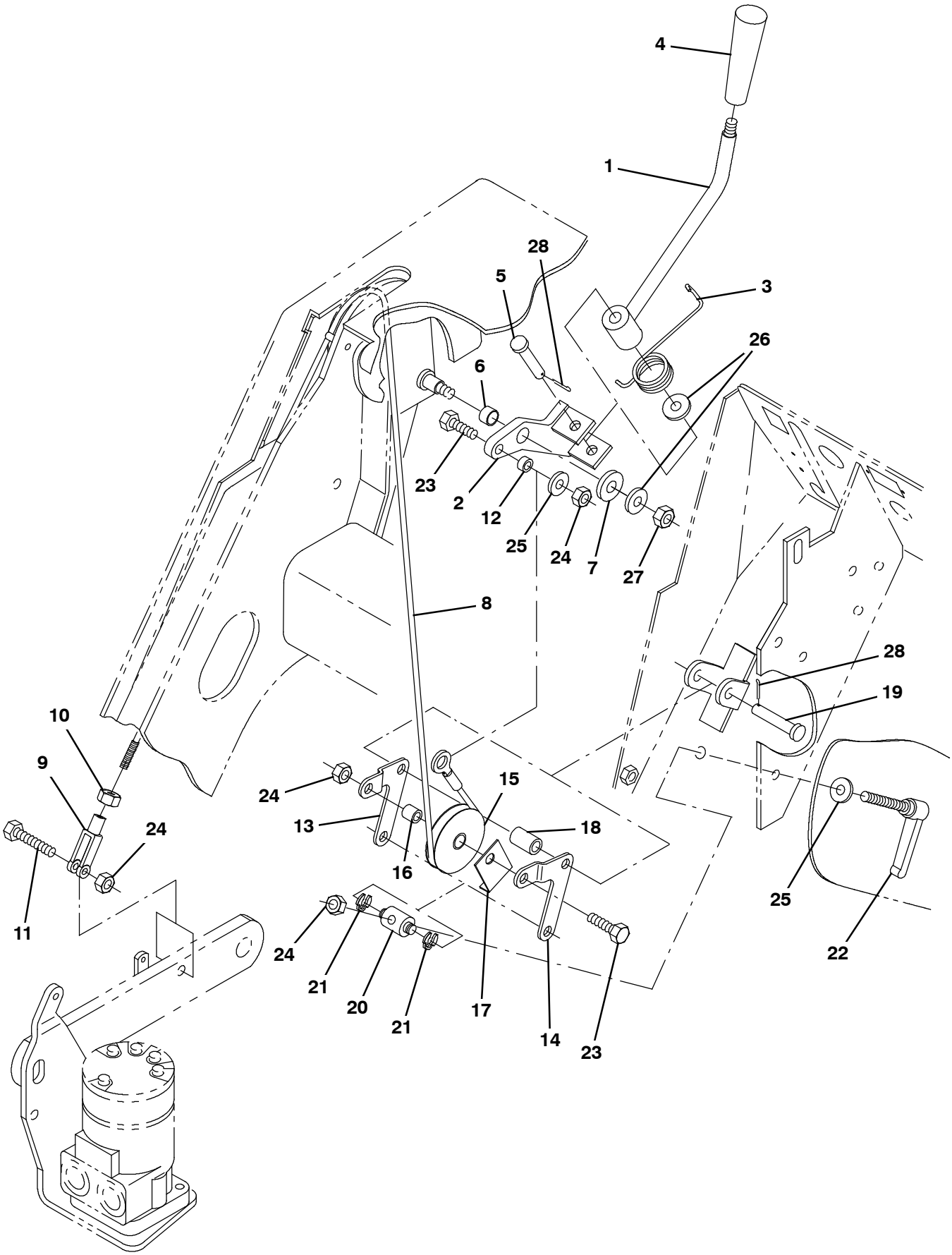

354932 - ALL

Fig. 23 - Brush Lift Group, Side

Ref.	Part No.	Serial Number	Description	Qty.
1	360449	(000000-)	Handle Wldt, Brush, Side	1
2	360417	(000000-)	Arm Wldt, Lift, Brush	1
3	360961	(000000-)	Spring, Tors, 1.03id .11wir 03.0coil	1
4	54995	(000000-)	Knob, 1.12d 3.86l M10 X 1.5, Plstc Tpr]	1
5	51813	(000000-)	Pin, Clevis, 0.37d X 2.12l	1
6	64173	(000000-)	Bushing, Sleeve, 0.50b 0.59d 0.38l, Stl	1
7	39346	(000000-)	Washer, Flat, 0.44, Std	1
8	1047878	(000000-)	Cable, Ss .12d 60.25l .55eye / M6- 1.0	1
9	1035826	(000000-)	Clevis, Adj, M6 Pin, M6 X 1.0 Rh, Pl	1
10	41359	(000000-)	Nut, Hex, Std, M6 X 1.00, 8	1
11	06957	(000000-)	Screw, Hex, M8 X 1.25 X 60, 8.8	1
12	360801	(000000-)	Sleeve, 0.32b 0.50d 0.3l, 2cham, Ss	1
13	360410	(000000-)	Bellcrank, Lift, Brush, Side, Rh	1
14	360411	(000000-)	Bellcrank, Lift, Brush, Side, Lh	1
15	369781	(000000-)	Pulley, Cable, 1.5d Nyl	1
16	222460	(000000-)	Sleeve, P/M, 0.32b 0.50d 0.5l [430ss]	1
17	54400	(000000-)	Bracket, Angle, Keeper, Cable	1
18	360451	(000000-)	Tube, 0.42id 0.62od 01.0l, Stl, Pl	1
19	29584	(000000-)	Pin, Clevis, 0.37d X 2.00l	1
20	71126	(000000-)	Block, Adj, Pivot	1
21	12364	(000000-)	Ring, Retaining, Ext, 0.38d, [Klipring]	2
22	360414	(000000-)	Lever, Adj, Metal	1
23	76570	(000000-)	Screw, Hex, M8 X 1.25 X 30, 8.8	2
24	08709	(000000-)	Nut, Hex, Lock, M8 X 1.25, Nl	4
25	32491	(000000-)	Washer, Flat, 0.31, Std	2
26	32492	(000000-)	Washer, Flat, 0.38, Std	2
27	41430	(000000-)	Nut, Hex, Lock, M10 X 1.5, Nl	1
28	44906	(000000-)	Pin, Cotter, Hair, 0.38d .093 Wir	2

Fig. 24 - Brush Motor and Pivot Group, Side

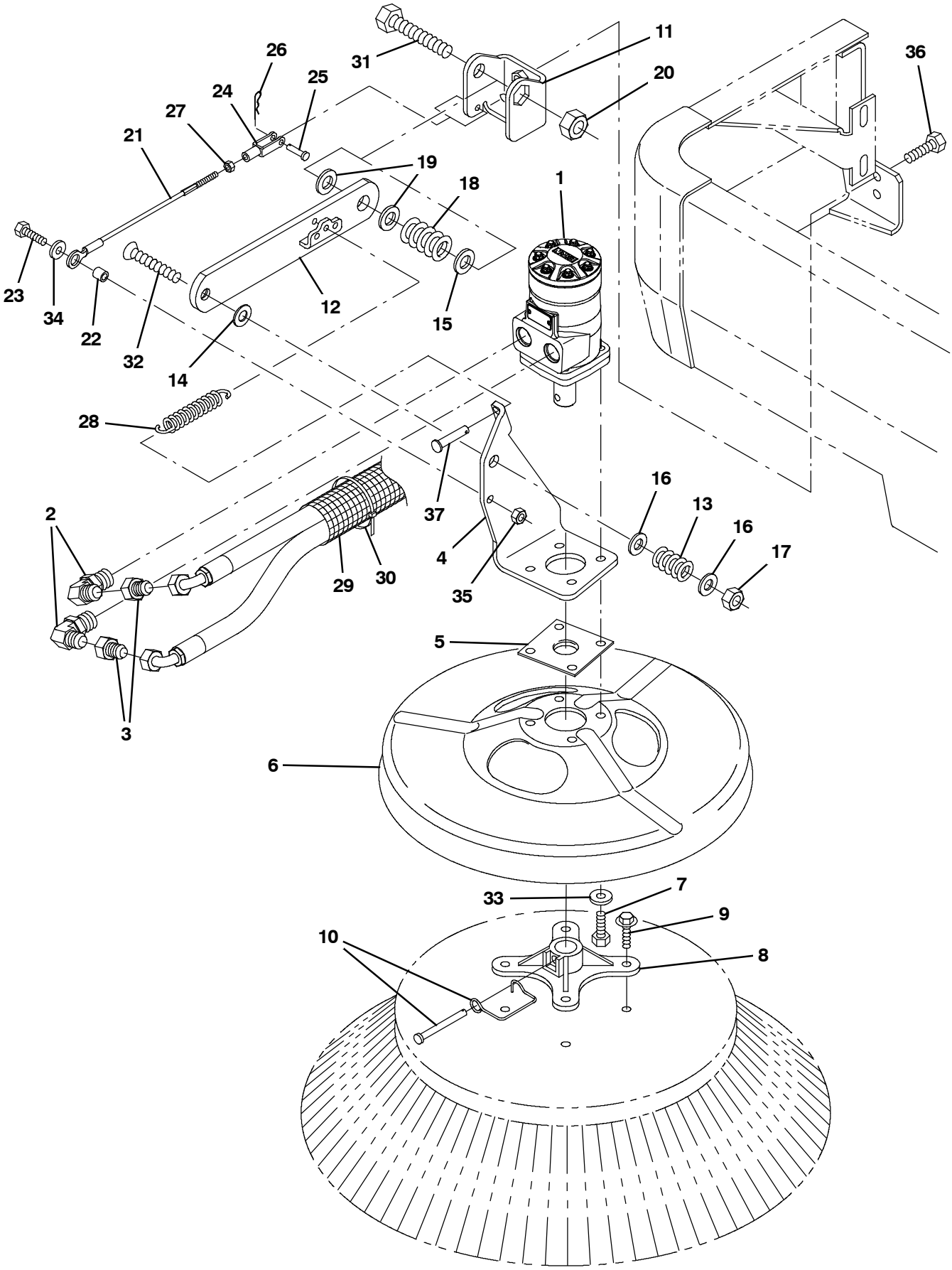

354933 - IC, NA

Fig. 24 - Brush Motor and Pivot Group, Side

	Ref.	Part No.	Serial Number	Description	Qty.
	1	361014	(000000- 002395)	Motor, Hyd, Gear, Int 09.7 Bi- Dir 1500 (See Breakdowns)	1
▽	1	1068802	(002396-)	Motor, Hyd, Gear, Int 09.7 Bi- Dir 1500	1
▲		22615	(002396-)	Seal Kit, Motor [Cl]	1
	2	56821	(000000- 002999)	Fitting, Hyd, E90, Jm08/Om10	2
	2	767411	(003000-)	Fitting, Hyd, E90, Fm08/Om10	2
	3	47753	(000000- 002999)	Fitting, Hyd, Str, Jf08/Jm06	2
	3	762458	(003000-)	Fitting, Hyd, Str, Ff08/Fm06	2
	4	1046246	(000000-)	Bracket, Mtg, Motor, Rh	1
	5	16082	(000000-)	Guard, String, Motor, Brush	1
	6	1054256	(000000-)	Guard, Brush	1
	7	46559	(000000-)	Screw, Hex, .38- 16 X 1.25, Nl	4
	8	47501	(000000-)	Hub, Adapter, Brush, 1.00b	1
	9	39396	(000000-)	Screw, Hex, .31- 12 X 1.50, Fmg [Ab]	4
	10	84581	(000000-)	Pin Assy, Side Brush W/ Clip	1
	11	1037427	(000000-)	Bracket, Arm, Side Brush	1
	12	1037485	(000000-)	Arm Wldt, Lift, Rh	1
	13	360357	(000000-)	Spring, Dsl, 1.00od 0.50id 1.25l	1
	14	59633	(000000-)	Washer, Thrust, 0.53b 1.00d 0.03w[Fbrgl]	1
	15	15331	(000000-)	Washer, Flat, 0.62, Sae	1
	16	32486	(000000-)	Washer Flat,0.50,Sae	2
	17	86029	(000000-)	Nut, Hex, Flexlock, .50- 13, Thin	1
	18	360081	(000000-)	Spring, Dsl, 1.25od 0.62id 1.80l	1
	19	64425	(000000-)	Washer, Thrust, 0.61b 1.25d .06, Fgl	2
	20	33342	(000000-)	Nut, Hex, Lock, M16 X 2.00, Nl	1
	21	1048311	(000000-)	Cable, Ss .19d 008.5l .55eye / M6- 1.0	1
	22	360801	(000000-)	Sleeve, 0.32b 0.50d 0.3l, 2cham, Ss	1
	23	09010	(000000-)	Screw, Hex, M8 X 1.25 X 25, Ss	1
	24	1035826	(000000-)	Clevis, Adj, M6 Pin, M6 X 1.0 Rh, Pl	1
	25	14605	(000000-)	Pin, Clevis, 0.25d X 0.75l	1
	26	08085	(000000-)	Pin, Cotter, Hair, 0.31d .058 Wir	1
	27	07785	(000000-)	Nut, Hex, Std, M6 X 1.00, Ss	1
	28	29499	(000000-)	Spring, Extn, 0.75od 0.11wir 04.5l	1
	29	31646	(000000-)	Sleeve, Nyl, 1.63id 25.0l	1
	30	49266	(000000-)	Tie, Cable, Nyl, 07.3l .19w 1.8 Max D	2
	31	06988	(000000-)	Screw, Hex, M16 X 2.00 X 90, 8.8	1
	32	27108	(000000-)	Screw, Flt, Soc, .50- 13 X 2.50, Al	1
	33	32492	(000000-)	Washer, Flat, 0.38, Std	4
	34	01685	(000000-)	Washer, Flat, 0.38b 0.88d .08, Ss	1
	35	08713	(000000-)	Nut, Hex, Lock, M8 X 1.25, Nl, Ss	1
	36	09028	(000000-)	Screw, Hex, M10 X 1.50 X 25, Ss	2
	37	41305	(000000-)	Pin, Clevis, 0.37d X 0.75l	1

Fig. 25 - Vacuum Fan Control Group

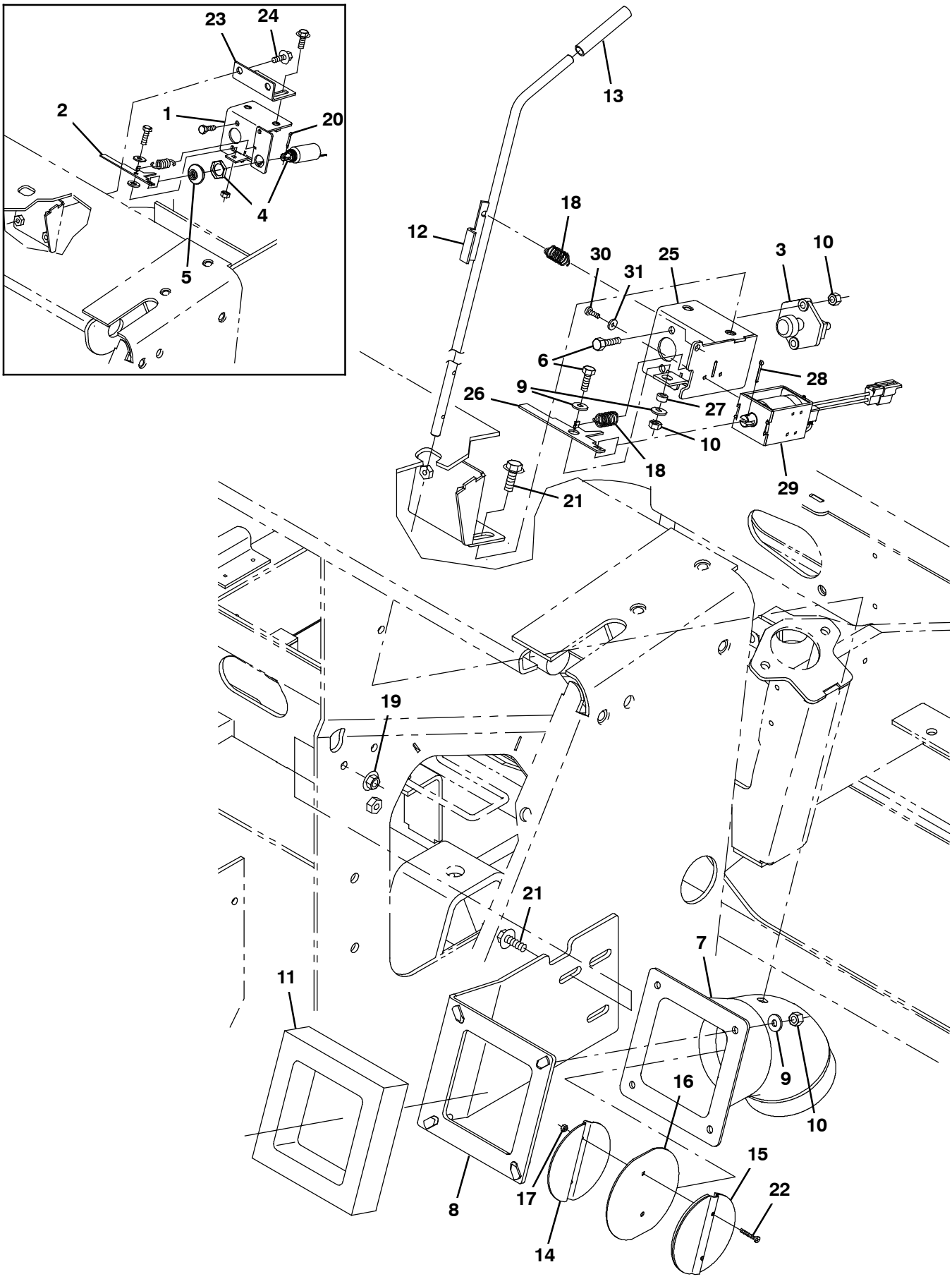

354959 - IC, NA

Fig. 25 - Vacuum Fan Control Group

Ref.	Part No.	Serial Number	Description	Qty.
1	1057734	(000000- 001286)	Bracket, Switch, Shaker	1
2	375019	(000000- 001286)	Lever, Vacfan	1
3	44078	(000000-)	Switch, Push, Spst, No	1
4	9007390	(000000- 001286)	Solenoid Kit, 12vdc, Replmt [Thrmsentry]	1
5	87707	(000000- 001286)	Bellows, Solenoid, .75- 16, 1.5l	1
6	06943	(000000-)	Screw, Hex, M6 X 1.00 X 20, 8.8	3
7	1048274	(000000-)	Tube, Transition, Valve, Ic	1
8	1045627	(000000-)	Bracket, Inlet, Vacfan	1
9	32483	(000000-)	Washer, Flat, 0.25, Sae	6
10	08708	(000000-)	Nut, Hex, Lock, M6 X 1.00, Nl	7
11	1044357	(000000-)	Seal, Inlet, Vacuum	1
12	1046590	(000000-)	Rod Wldt, Damper	1
13	360981	(000000-)	Grip, Vyl	1
14	1052653	(000000-)	Plate Wldt, Damper	1
15	1052652	(000000-)	Damper, Inlet	1
16	87983	(000000-)	Seal, Rbr, Damper, 0.06th, 04.1d	1
17	75939	(000000-)	Nut, Hex, Lock, #06- 32, Nl	2
18	09087	(000000-)	Spring, Extn, 0.96od 0.05wir 01.4l	2
19	07791	(000000-)	Nut, Hex, Flng, M8 X 1.25	2
20	08346	(000000- 001286)	Pin, Cotter, .125 X 0.75	1
21	1037354	(000000-)	Screw, Hex, M8 X 1.25 X 30, 9.8, Sems	7
22	25005	(000000-)	Screw, Pan, Phl, 06- 32 X 1.00, G1	2
23	1057735	(000000- 001280)	Bracket, Switch, Shaker	1
24	1037354	(000000- 001280)	Screw, Hex, M8 X 1.25 X 30, 9.8, Sems	2
25	1060334	(001287-)	Bracket Wldt, Switch, Shakr	1
26	1060331	(001287-)	Lever, Vacfan	1
27	140147	(001287-)	Sleeve, P/M, 0.25b 0.44d 0.2l, Pl	1
28	08179	(001287-)	Pin, Cotter, .094 X 1.00	1
29	1060690	(001287-)	Solenoid Assy, Pull, 12vdc	1
30	32515	(001287-)	Screw, Pan, Phl, 08- 32 X 0.38, G1	2
31	19065	(001287-)	Washer, Flat, 08	2

Fig. 26 - Vacuum Fan Group

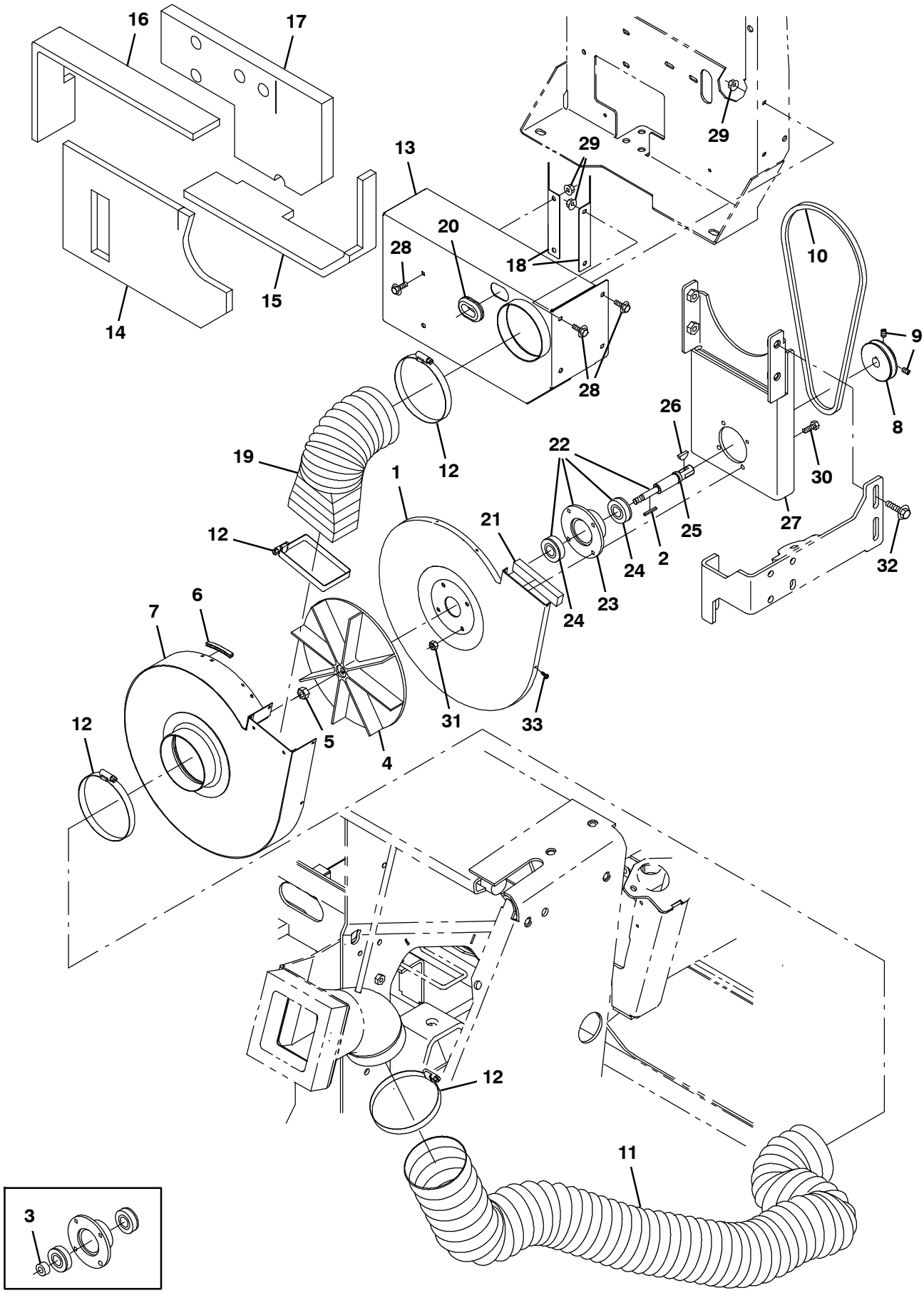

354960 - IC

Fig. 26 - Vacuum Fan Group

	Ref.	Part No.	Serial Number	Description	Qty.
	1	1052763	(000000-)	Housing, Fan, Rear, Impeller	1
	2	00954	(000000-)	Key, Sq, 0.12 X 0.12, 1.00l	1
	3	10362	(000000- 001456)	Tube, 0.38id 0.81od 00.4l, Stl	1
	4	74454	(000000-)	Impeller, 9.00d X 1.40w X 0.376b	1
	5	87299	(000000- 001456)	Nut, Hex, Flexlock, .31- 24, Thin	1
	5	71244	(001457-)	Nut, Hex, Flexlock, .38- 24	1
	6	59118- 6	(000000-)	Molding, Trim, Pvc, .00- .06 02.2l	1
	7	1052644	(000000-)	Housing Wldt, Fan	1
	8	360181	(000000- 001334)	Sheave, 01grv, 02.6pd 0.63b [3v]	1
	8	361927	(001335-)	Sheave, 01grv, 02.6pd 0.63b [3v]	1
	9	39338	(000000- 001334)	Screw, Set, Soc, .31- 18 X 0.50, Al	2
	9	39332	(001335-)	Screw, Set, Soc, .25- 20 X 0.75, Al	2
	10	1049908	(000000-)	Belt, V, 37.5l [3v, 3vx]	1
	11	1234489	(000000-)	Hose, Flex, Vacuum, 04.0d, 050.0l	1
	12	23498	(000000-)	Clamp, Hose, Wormdrive, 3.56- 4.50d, .50w	4
	13	1050244	(000000-)	Box Wldt, Muffler, Vacfan	1
	14	1050423	(000000-)	Insulation, Acstc, .50, 14.6 X 08.1	1
	15	1050425	(000000-)	Insulation, Acstc, 0.5, 20.6 X 03.3	1
	16	1050426	(000000-)	Insulation, Acstc, 0.5, 21.3 X 03.3	1
	17	1050424	(000000-)	Insulation, Acstc, 1.0, 14.3 X 07.9	1
	18	1050249	(000000-)	Angle, Baffle	2
	19	361153	(000000-)	Hose, Flex, Vacuum, 04.0d, 010.5l 4x2end	1
	20	10632- 14	(000000-)	Grommet, Rbr, 1.00id, F/1.4h, .12 Matl	1
	21	361327	(000000-)	Seal, Ure, 0.50, 0.75w 04.0l Adh	1
▽	22	387387	(000000-)	Shaft Assy, Brg	1
▲	23	41561	(000000-)	Housing, Flng, Brg	1
▲	24	32525	(000000-)	Bearing, Ball, 0.67b 1.57d 0.47w	2
▲	25	387376	(000000-)	Shaft, Impeller	1
	26	00500- 10	(000000-)	Key, Woodruff, 0.19 0.75 [Asa0606]	1
	27	1050165	(000000-)	Channel Wldt	7
	28	1040467	(000000-)	Screw, Hex, M6 X 1.00 X 20, 9.8, Sems	5
	29	07790	(000000-)	Nut, Hex, Flng, M6 X 1.00	7
	30	06943	(000000-)	Screw, Hex, M6 X 1.00 X 20, 8.8	4
	31	08708	(000000-)	Nut, Hex, Lock, M6 X 1.00, Nl	4
	32	1037358	(000000-)	Screw, Hex, M10 X 1.50 X 35, 9.8, Sems	4
	33	87838	(000000-)	Screw, Hex, 06- 20 X 0.50, Fmg/Ab, Pl	9

Fig. 27 - Hopper Lift Arms Group

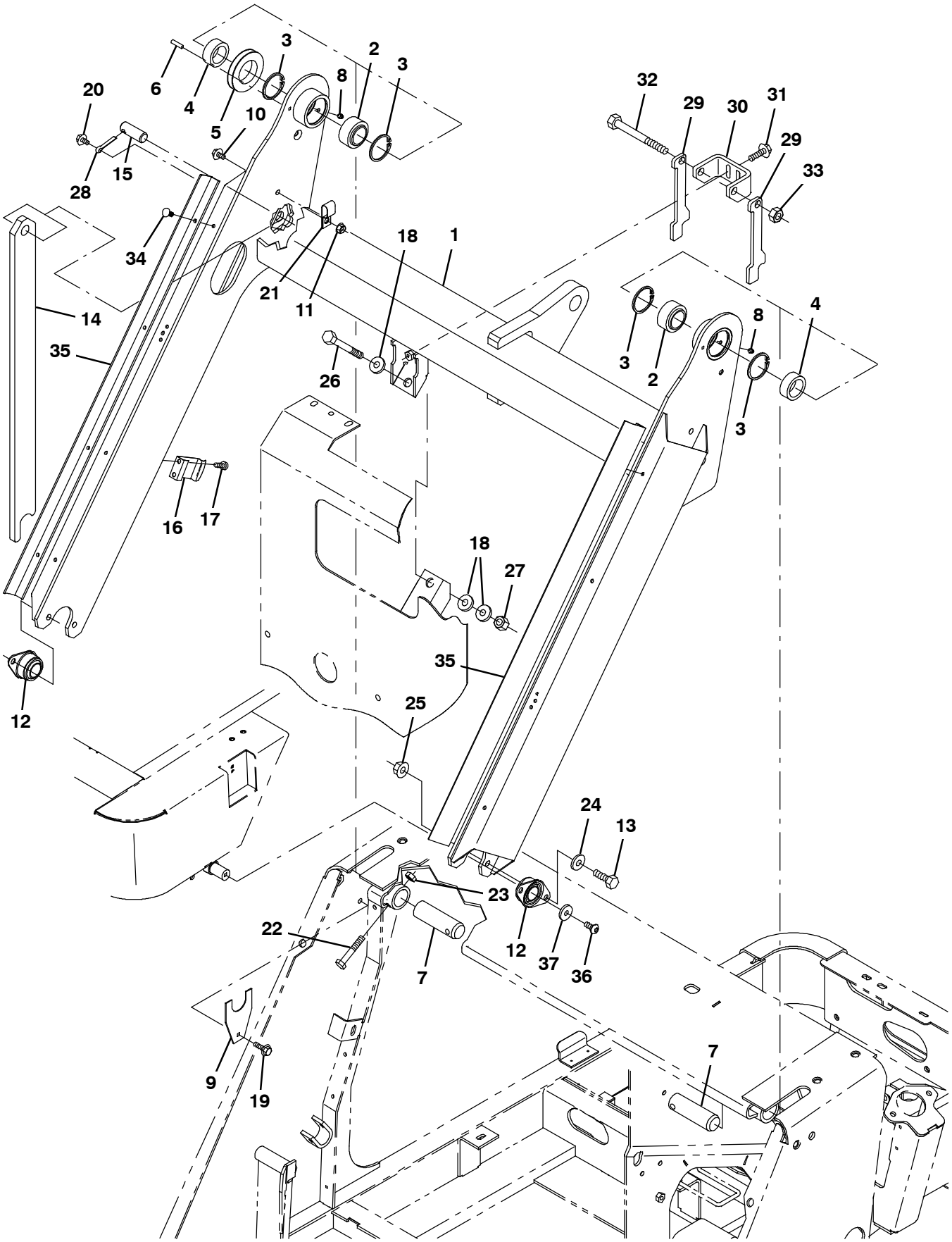

354961 - IC, NA

Fig. 27 - Hopper Lift Arms Group

Ref.	Part No.	Serial Number	Description	Qty.
1	9006900	(000000-)	Arm, Lift, Hppr, W/ Label [S20] Na	1
1	9006902	(000000-)	Arm, Lift, Hppr, W/ Label [S20] Jp	1
2	42120- 1	(000000-)	Bearing, Self Align, 1.25b 2.00d	2
3	59542	(000000-)	Ring, Retaining, Int, 2.00d	4
4	360455	(000000-)	Sleeve, P/M, 1.25b 1.75d 0.7l [430ss]	2
5	360077	(000000-)	Pulley, Cable, 3.0d 1.76b, .25d Cable	1
6	17404	(000000-)	Pin, Roll, .250d X 0.75l, .250/.256	1
7	360064	(000000-)	Pin, 1.25d 04.0l, 1/.34h, Stl	2
8	07259	(000000-)	Fitting, Grease, Str Pm04 .47l	2
9	360768	(000000-)	Plate, Spacer, Lift Arm	8
10	1020341	(000000-)	Screw, Hex, M8 X 1.25 X 20, Ss, Sems	1
11	07791	(000000-)	Nut, Hex, Flng, M8 X 1.25	1
12	87216	(000000-)	Bearing, Flng, 2hole, 1.00b	2
13	09028	(000000-)	Screw, Hex, M10 X 1.50 X 25, Ss	4
14	9007372	(000000-)	Arm, Safety, Hppr, W/ Label, [S20]	1
14	9007374	(000000-)	Arm, Safety, Hppr, W/ Label, Tj [S20]	1
15	360386	(000000-)	Pin, 0.75d 02.0l, 1/.31h, Stl	1
16	87244	(000000-)	Clip, Spring, Prop Arm	1
17	48732	(000000-)	Screw, Pan, Phl, M6 X 1.00 X 10, Ss	2
18	36328	(000000-)	Washer, Flat, Belleville, .50	3
19	12459	(000000-)	Screw, Hex, M6 X 1.00 X 20, Fmg	2
20	74455	(000000-)	Screw, Hex, M6 X 1.00 X 12, Fmg	1
21	67366	(000000-)	Clamp, Cable, Stl, 1.0x2.0x0.62w, 1hole	1
22	06957	(000000-)	Screw, Hex, M8 X 1.25 X 60, 8.8	2
23	08709	(000000-)	Nut, Hex, Lock, M8 X 1.25, Nl	2
24	32492	(000000-)	Washer, Flat, 0.38, Std	4
25	07792	(000000-)	Nut, Hex, Flng, M10 X 1.50	4
26	34877	(000000-)	Screw, Hex, M10 X 1.50 X 100, 8.8	1
27	41430	(000000-)	Nut, Hex, Lock, M10 X 1.5, Nl	1
28	08361	(000000-)	Pin, Cotter, .250 X 1.25	1
29	1052203	(000000-)	Plate, Mtg, Pin	2
30	1052231	(000000-)	Channel, Mtg, Lock	1
31	1037355	(000000-)	Screw, Hex, M8 X 1.25 X 35, 9.8, Sems	2
32	12138	(000000-)	Screw, Hex, M12 X 1.75 X 120, 8.8	1
33	08711	(000000-)	Nut, Hex, Lock, M12 X 1.75, Nl	1
34	21168	(000000-)	Plug, Hole, Rnd, 0.25h 0.8l, Brb, Nyl	8
35	1053746	(000000-)	Seal, Cover	2
36	17284	(001071-)	Screw, Btn, M8 X 1.25 X 16, Ss	2
37	30013	(001071-)	Washer, Flat, 0.31, Fendr	2

Fig. 28 - Hopper Lift Cylinder Group

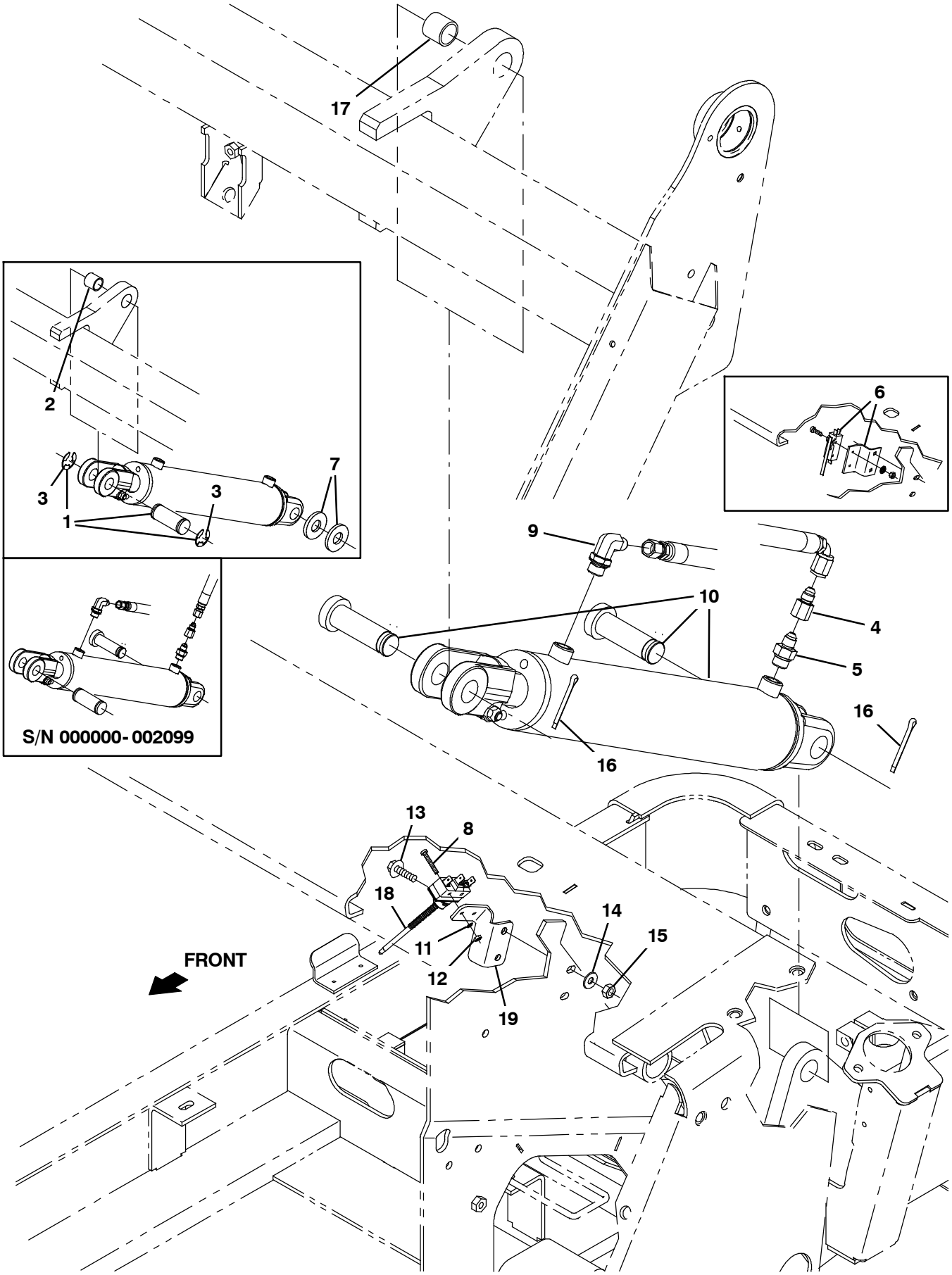

356247 - IC, NA

Fig. 28 - Hopper Lift Cylinder Group

	Ref.	Part No.	Serial Number	Description	Qty.
▽	1	361295	(000000- 004422)	Pin Assy, Clevis, Hppr Lift	1
▲	2	35529	(000000- 004422)	Bushing, Sleeve, 1.00b 1.13d 0.99l, Fgl	1
▲	3	23788	(000000- 004422)	Ring, Retaining, Ext, 0.98d, [E- Ring]	2
	4	1055453	(000000- 002999)	Fitting, Hyd, Rst, Jf04/Jm04, .055	1
	4	1071702	(003000-)	Fitting, Hyd, Rst, Fm04/Of04, .055	1
	5	55685	(000000- 002999)	Fitting, Hyd, Str, Jm04/Om06	1
	5	762426	(003000-)	Fitting, Hyd, Str, Fm04/Om06	1
	6	9019144	(000000- 006965)	Hopper Switch Position Kit, Ci [S20]	1
	7	32598	(000000- 004422)	Washer, Flat, 1.02b 1.75d .12, Stl	2
	8	1054872	(000000-)	Screw, Pan, Phl, M3 X 0.50 X 25, Blk	2
	9	56820	(000000- 002999)	Fitting, Hyd, E90, Jm06/Om06	1
	9	762432	(003000-)	Fitting, Hyd, E90, Fm06/Om06	1
	10	1054106	(000000- 004422)	Cylinder, Hyd, 3.0b 24.8l 13.50strk 3000	1
▽	10	1072081	(004423-)	Cylinder, Hyd, 3.0b 24.8l 13.50strk 3000	1
▲		9011421	(004423-)	Seal Kit, Cyl, Hyd	1
	11	39658	(000000-)	Washer, Lock, Int, 04	2
	12	01754	(000000-)	Nut, Hex, Std, M3 X 0.50, 8	2
	13	1036892	(000000-)	Screw, Hex, M6 X 1.00 X 25, 9.8 Sems	2
	14	32490	(000000-)	Washer, Flat, 0.25, Std	2
	15	08708	(000000-)	Nut, Hex, Lock, M6 X 1.00, Nl	2
	16	08298	(000000-)	Pin, Cotter, .187 X 1.75	2
	17	35529	(004423-)	Bushing, Sleeve, 1.00b 1.13d 0.99l, Fgl	1
	18	1246200	(006966-)	Switch, Wobble, Spdt, 250vac, 15a	1
	19	1246255	(006966-)	Bracket, Mtg, Switch	1

Fig. 29 - Hopper Group, Plastic

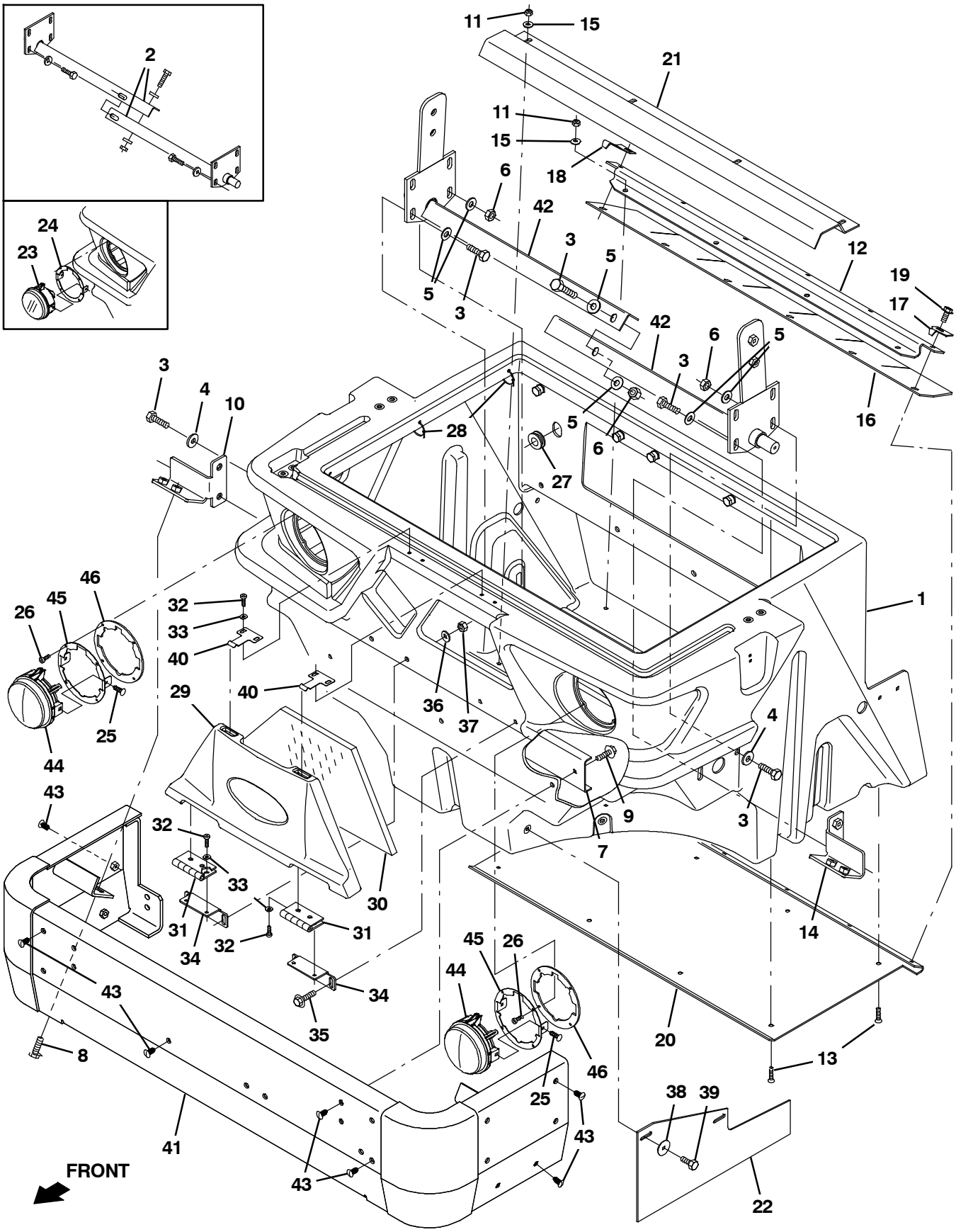

354918 - IC, NA

Fig. 29 - Hopper Group, Plastic

	Ref.	Part No.	Serial Number	Description	Qty.
	1	1043490	(000000-)	Hopper [S20]	1
	2	1048990	(000000- 001070)	Plate Wldt, Pivot	2
	3	12317	(000000-)	Screw, Hex, M10 X 1.50 X 30, Ss	10
	4	1014563	(000000-)	Washer, Flat, 0.40b 1.12d .12, Ss	4
	5	32492	(000000-)	Washer, Flat, 0.38, Std	12
	6	41430	(000000-)	Nut, Hex, Lock, M10 X 1.5, Nl	6
	7	360602	(000000-)	Plate, Sppt, Bmpr	1
	8	1037358	(000000-)	Screw, Hex, M10 X 1.50 X 35, 9.8, Sems	4
	9	1037355	(000000-)	Screw, Hex, M8 X 1.25 X 35, 9.8, Sems	4
	10	1049253	(000000-)	Bracket, Mtg, Bmpr, Front, Rh	1
	11	08708	(000000-)	Nut, Hex, Lock, M6 X 1.00, Nl	8
	12	1052452	(000000-)	Strip, Retainer, Hppr Lip	1
	13	06415	(000000-)	Screw, Flt, Soc, M6 X 1.00 X 25, 10.9	12
	14	1049263	(000000-)	Bracket, Mtg, Bmpr, Front, Lh	1
	15	32490	(000000-)	Washer, Flat, 0.25, Std	8
	16	360327	(000000-)	Skirt, Neo, .12, 05.20w 36.10l, 06/ Sl	1
	17	360893	(000000-)	Deflector, Hppr, Lh	1
	18	360894	(000000-)	Deflector, Hppr, Rh	2
	19	361339	(000000-)	Screw, Hex, M6 X 1.00 X 16, Fmg	6
	20	1052454	(000000-)	Plate, Wear	1
	21	1048732	(000000-)	Bracket, Angle, Hppr Bottom Stiffener	1
	22	1047575	(000000-)	Skirt, Neo, .12 2ply, Dust- Cntrl	1
▽	23	9018444	(000000- 006922)	Headlight Kit, Led, Replmt [S20ic]	2
▲		1060413	(000000- 006922)	Lamp, 12vdc, 37.5watt, Halogen	1
	24	1045493	(000000- 006922)	Plate, Mtg, Headlight	2
	25	1066063	(000000-)	Plug, Hole, Rnd, 0.25h 0.43l, Brb, Nyl	4
	26	1053318	(000000-)	Screw, Pan, Phl, 08- 16 X 1.00, F/ Plstc	8
	27	10632- 18	(000000-)	Grommet, Rbr, 0.69id, F/1.0h, .25 Matl	1
	28	49266	(000000-)	Tie, Cable, Nyl, 07.3l .19w 1.8 Max D	8
	29	1044254	(000000-)	Door, Access, Hppr	1
	30	1045365	(000000-)	Seal, Door, Access	1
	31	1049102	(000000-)	Hinge, .25pin .12 3.0w 03.0l, 4/0.28sl	2
	32	09200	(000000-)	Screw, Pan, Phl, M5 X 0.80 X 12, Ss	12
	33	19066	(000000-)	Washer, Flat, 10	12
	34	1044907	(000000-)	Bracket, Mtg, Hinge	2
	35	1037354	(000000-)	Screw, Hex, M8 X 1.25 X 30, 9.8, Sems	4
	36	32491	(000000-)	Washer, Flat, 0.31, Std	4
	37	08709	(000000-)	Nut, Hex, Lock, M8 X 1.25, Nl	4
	38	30013	(000000-)	Washer, Flat, 0.31, Fendr	2
	39	49826	(000000-)	Screw, Hex, M8 X 1.25 X 16, Nl, Ss	2
	40	1044900	(000000-)	Latch, Door	2
	41	1042875	(000000-)	Bumper Wldt, Front	1
	42	1076304	(001071-)	Plate Wldt, Pivot	2
	43	21168	(000000-)	Plug, Hole, Rnd, 0.25h 0.8l, Brb, Nyl	24
	44	1242544	(006923-)	Headlight, Led, Rnd [S20/S30 Ic]	2
	45	1243552	(006923-)	Gasket, Headlight [S20]	2
	46	1242833	(006923-)	Plate, Mtg, Headlight [S20]	2

Fig. 30 - Hopper Group, Steel

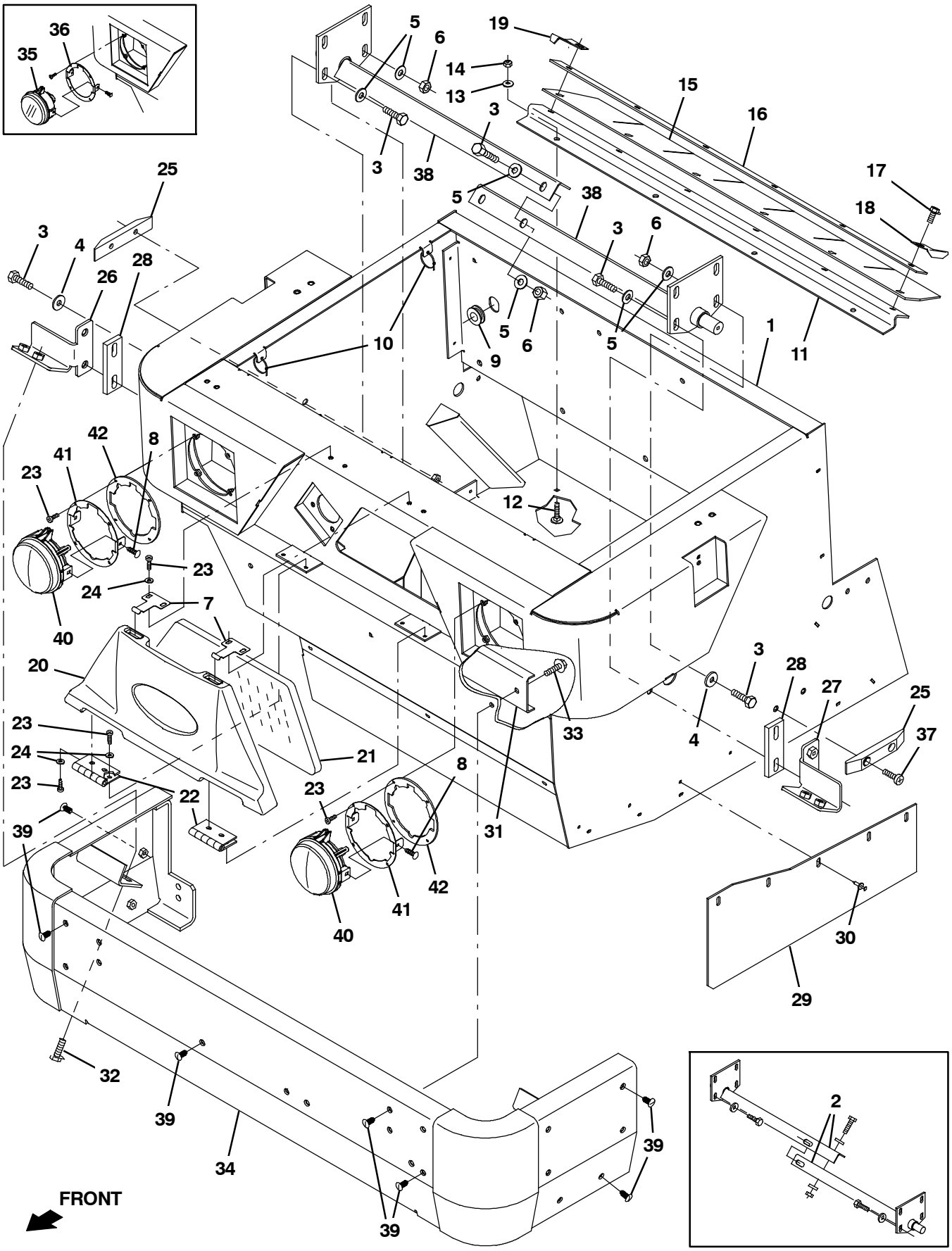

354919 - IC, NA

Fig. 30 - Hopper Group, Steel

	Ref.	Part No.	Serial Number	Description	Qty.
	1	1048063	(000000-)	Hopper Wldt, Stl	1
	2	1048990	(000000- 001070)	Plate Wldt, Pivot	2
	3	12317	(000000-)	Screw, Hex, M10 X 1.50 X 30, Ss	10
	4	1014563	(000000-)	Washer, Flat, 0.40B 1.12D .12, Ss	4
	5	32492	(000000-)	Washer, Flat, 0.38, Std	12
	6	41430	(000000-)	Nut, Hex, Lock, M10 X 1.5, Nl	6
	7	1044900	(000000-)	Latch, Door	2
	8	1066063	(000000-)	Plug, Hole, Rnd, 0.25h 0.43l, Brb, Nyl	4
	9	10632- 18	(000000-)	Grommet, Rbr, 0.69id, F/1.0h, .25 Matl	1
	10	49266	(000000-)	Tie, Cable, Nyl, 07.3l .19w 1.8 Max D	8
	11	1050409	(000000-)	Bracket, Retainer, Hppr, Lip	1
	12	379791	(000000-)	Bolt, Carriage, M06 X 1.00 X 30	4
	13	32490	(000000-)	Washer, Flat, 0.25, Std	4
	14	08708	(000000-)	Nut, Hex, Lock, M6 X 1.00, Nl	4
	15	1050412	(000000-)	Skirt, Hppr, Lip	1
	16	1050417	(000000-)	Plate, Retainer, Hppr, Lip	1
	17	16735	(000000-)	Screw, Hex, M8 X 1.25 X 16, 8.8	6
	18	360893	(000000-)	Deflector, Hppr, Lh	1
	19	360894	(000000-)	Deflector, Hppr, Rh	1
	20	1044254	(000000-)	Door, Access, Hppr	1
	21	1045365	(000000-)	Seal, Door, Access	1
	22	1049102	(000000-)	Hinge, .25pin .12 3.0w 03.0l, 4/0.28sl	2
	23	09200	(000000-)	Screw, Pan, Phl, M5 X 0.80 X 12, Ss	16
	24	19066	(000000-)	Washer, Flat, 10	4
	25	1021327	(000000-)	Block, Guide, Hppr	2
	26	1049253	(000000-)	Bracket, Mtg, Bmpr, Front, Rh	1
	27	1049263	(000000-)	Bracket, Mtg, Bmpr, Front, Lh	1
	28	1048519	(000000-)	Plate, Spacer	2
	29	1056194	(000000-)	Skirt, Neo, .12, 08.00W 29.50L, 06/ SL	1
	30	72968	(000000-)	Rivet, Plstc, .250d X 0.90	6
	31	360602	(000000-)	Plate, Sppt, Bmpr	1
	32	1037358	(000000-)	Screw, Hex, M10 X 1.50 X 35, 9.8, Sems	4
	33	1037355	(000000-)	Screw, Hex, M8 X 1.25 X 35, 9.8, Sems	4
	34	1042875	(000000-)	Bumper Wldt, Front	1
▽	35	9018444	(000000- 006922)	Headlight Kit, Led, Replmt [S20ic]	2
▲		1060413	(000000- 006922)	Lamp, 12vdc, 37.5watt, Halogen	1
	36	1045493	(000000- 006922)	Plate, Mtg, Headlight	2
	37	367771	(000000-)	Screw, Pan, Phl, M8 X 1.25 X 25, Ss	4
	38	1070338	(001071-)	Plate Wldt, Pivot, Stl Hppr	2
	39	21168	(000000-)	Plug, Hole, Rnd, 0.25h 0.8l, Brb, Nyl	24
	40	1242544	(006923-)	Headlight, Led, Rnd [S20/S30 Ic]	2
	41	1243552	(006923-)	Gasket, Headlight [S20]	2
	42	1242833	(006923-)	Plate, Mtg, Headlight [S20]	2

Fig. 31 - Hopper Cover Group

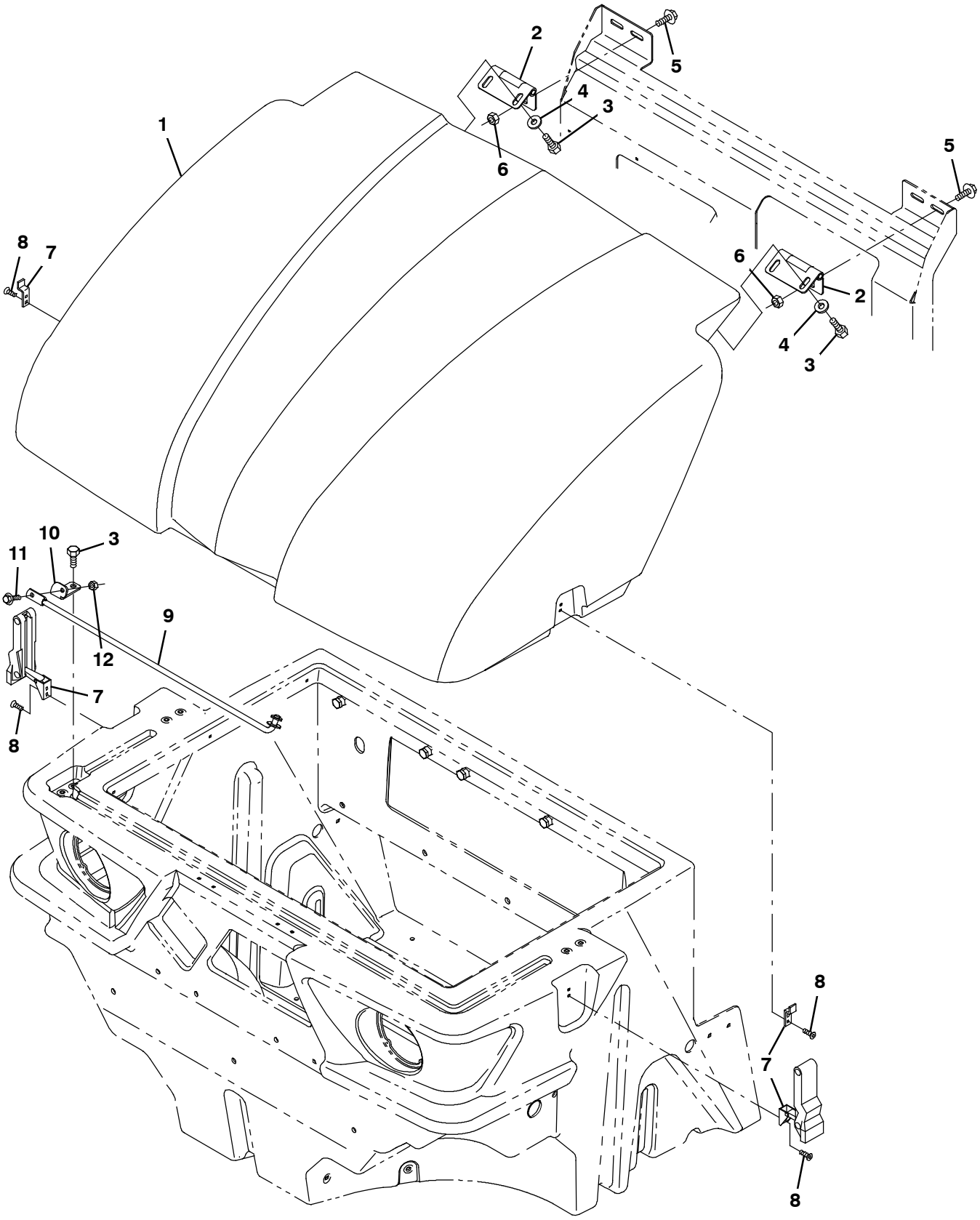

354920 - ALL

Fig. 31 - Hopper Cover Group

Ref.	Part No.	Serial Number	Description	Qty.
1	1043938	(000000-)	Cover, Hppr	1
2	1044214	(000000-)	Hinge, .38pin .12 3.5w 4.0l [Oal]	2
3	16735	(000000-)	Screw, Hex, M8 X 1.25 X 16, 8.8	6
4	32491	(000000-)	Washer, Flat, 0.31, Std	8
5	1037346	(000000-)	Screw, Hex, M8 X 1.25 X 25, 9.8, Sems	4
6	07791	(000000-)	Nut, Hex, Flng, M8 X 1.25	4
7	360824	(000000-)	Latch	2
8	09200	(000000-)	Screw, Pan, Phl, M5 X 0.80 X 12, Ss	8
9	1045434	(000000-)	Rod Wldt, Safety, Hppr Cover	1
10	1045423	(000000-)	Bracket, Rod, Safety	1
11	1036892	(000000-)	Screw, Hex, M6 X 1.00 X 25, 9.8, Sems	1
12	08708	(000000-)	Nut, Hex, Lock, M6 X 1.00, Nl	1

Fig. 32 - Hopper Support Group (001071-)

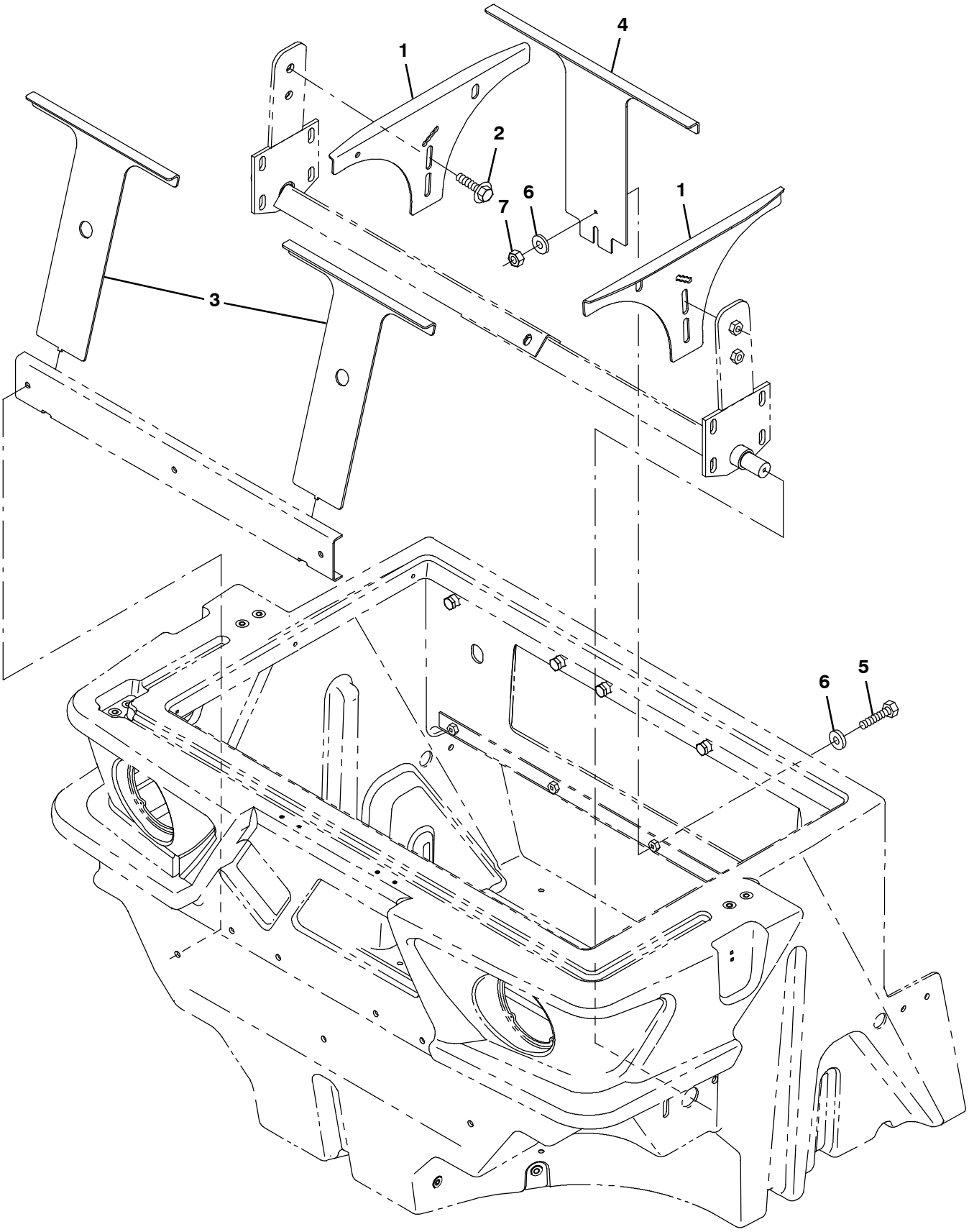

356082 - ALL, NA

Fig. 32 - Hopper Support Group (001071-)

Ref.	Part No.	Serial Number	Description	Qty.
1	1060278	(001071-)	Support, Hppr, Lip, Side	2
2	1037358	(001071-)	Screw, Hex, M10 X 1.50 X 35, 9.8, Sems	4
3	1059119	(001071-)	Support, Hppr, Lip, Front	2
4	1059158	(001071-)	Support, Hppr, Lip, Back	1
5	04375	(001071-)	Screw, Hex, M8 X 1.25 X 40, 8.8, Fl	1
6	32491	(001071-)	Washer, Flat, 0.31, Std	2
7	08709	(001071-)	Nut, Hex, Lock, M8 X 1.25, Nl	1

Fig. 33 - Hopper Dump Door Group

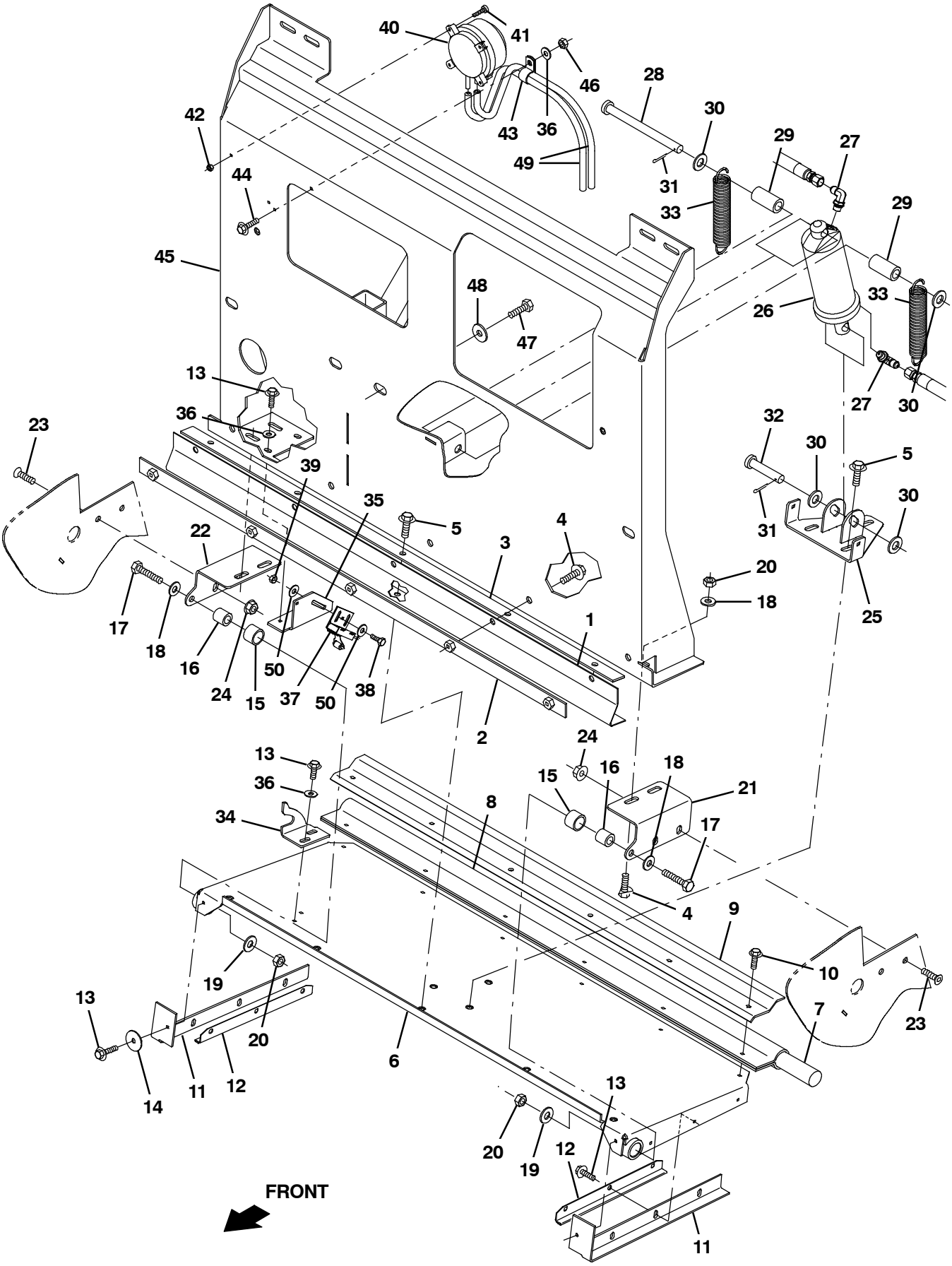

354917 - IC, NA

Fig. 33 - Hopper Dump Door Group

Ref.	Part No.	Serial Number	Description	Qty.
1	360336	(000000-)	Seal	1
2	1047280	(000000-)	Strip Wldt, Seal, Door	1
3	1051115	(000000-)	Strip, Retainer	1
4	1037354	(000000-)	Screw, Hex, M8 X 1.25 X 30, 9.8, Sems	9
5	1037346	(000000-)	Screw, Hex, M8 X 1.25 X 25, 9.8, Sems	8
6	1051045	(000000-)	Door Wldt, Dump, Hppr	1
7	87689	(000000-)	Cord, Sponge, Neo, 1.0d 36.3l	1
8	360603	(000000-)	Seal, Rbr, .13 6.34w 36.3l, 12/.28h, Red	1
9	1052446	(000000-)	Strip, Retainer, Dump Door	1
10	12459	(000000-)	Screw, Hex, M6 X 1.00 X 20, Fmg	6
11	1055583	(000000-)	Seal, Rbr, Clsd, 0.13, Door, Dump, Side	2
12	360424	(000000-)	Retainer, Seal, Hppr Door, Side	2
13	74455	(000000-)	Screw, Hex, M6 X 1.00 X 12, Fmg	12
14	41178	(000000-)	Washer, Flat, 0.25, Fendr	2
15	64379	(000000-)	Bushing, Sleeve, 0.75b 0.88d 0.75l, Tef	2
16	87104	(000000-)	Tube, 0.38id 0.75od 00.9l, Stl	2
17	09026	(000000-)	Screw, Hex, M8 X 1.25 X 40, Ss	2
18	32491	(000000-)	Washer, Flat, 0.31, Std	6
19	32492	(000000-)	Washer, Flat, 0.38, Std	2
20	08709	(000000-)	Nut, Hex, Lock, M8 X 1.25, Nl	6
21	1050243	(000000-)	Bracket, Angle, Pivot, Door, Dump, Lh	1
22	1050242	(000000-)	Bracket, Angle, Pivot, Door, Dump, Rh	1
23	79246	(000000-)	Screw, Flt, Soc, M8 X 1.25 X 20, 18- 8,Ss	4
24	07791	(000000-)	Nut, Hex, Flng, M8 X 1.25	4
25	1051049	(000000-)	Bracket, Mtg, Cyl	1
26	1038176	(000000-)	Cylinder, Hyd, 2.0b 08.0l 04.00strk 2500	1
27	77097	(000000- 002999)	Fitting, Hyd, E90, Jm04/Om04	2
27	762427	(003000-)	Fitting, Hyd, E90, Fm04/Om04	2
28	51225- 1	(000000-)	Pin, Clevis, 0.50d X 6.00l	1
29	360848	(000000-)	Spacer, 0.56b 0.88d 1.82l, Pl	2
30	32486	(000000-)	Washer Flat,0.50,Sae	4
31	08182	(000000-)	Pin, Cotter, .125 X 1.00	2
32	11211	(000000-)	Pin, Clevis, 0.50d X 2.25l	1
33	360606	(000000-)	Spring, Tens	2
34	1051773	(000000-)	Bracket, Door, Indicator	1
35	1051766	(000000-)	Bracket, Door, Indicator	1
36	32490	(000000-)	Washer, Flat, 0.25, Std	5
37	59965	(000000-)	Switch, Snap, 15a No, Rlr	1
38	09244	(000000-)	Screw, Hex, M5 X 0.80 X 16, 8.8	2
39	06549	(000000-)	Nut, Hex, Lock, M5 X 0.80, Nl	2
40	1052885	(000000-)	Switch, Press, Adj [4- 16 In Wtr]	1
41	06927	(000000-)	Screw, Pan, Phl, M4 X 0.70 X 16, 4.8	2
42	02850	(000000-)	Nut, Hex, Lock, M4 X 0.70, Nl	2
43	67767	(000000-)	Clamp, Cable, Stl, 0.69d X 0.62w, 1hole	1
44	1036892	(000000-)	Screw, Hex, M6 X 1.00 X 25, 9.8 Sems	1
45	1044273	(000000-)	Plate Wldt, Back, Hppr	1
46	08708	(000000-)	Nut, Hex, Lock, M6 X 1.00, Nl	1
47	15675	(000000-)	Screw, Hex, M8 X 1.25 X 16, Ss	5
48	1014563	(000000-)	Washer, Flat, 0.40b 1.12d .12, Ss	5
49	379719	(000000-)	Hose, Vacuum, 0.16id X 060.0l	1
50	08793	(000000-)	Washer, Flat, 0.20b 0.50d .06, Alm, Blnd	4

Fig. 34 - Hopper Filter Shaker Tray Group

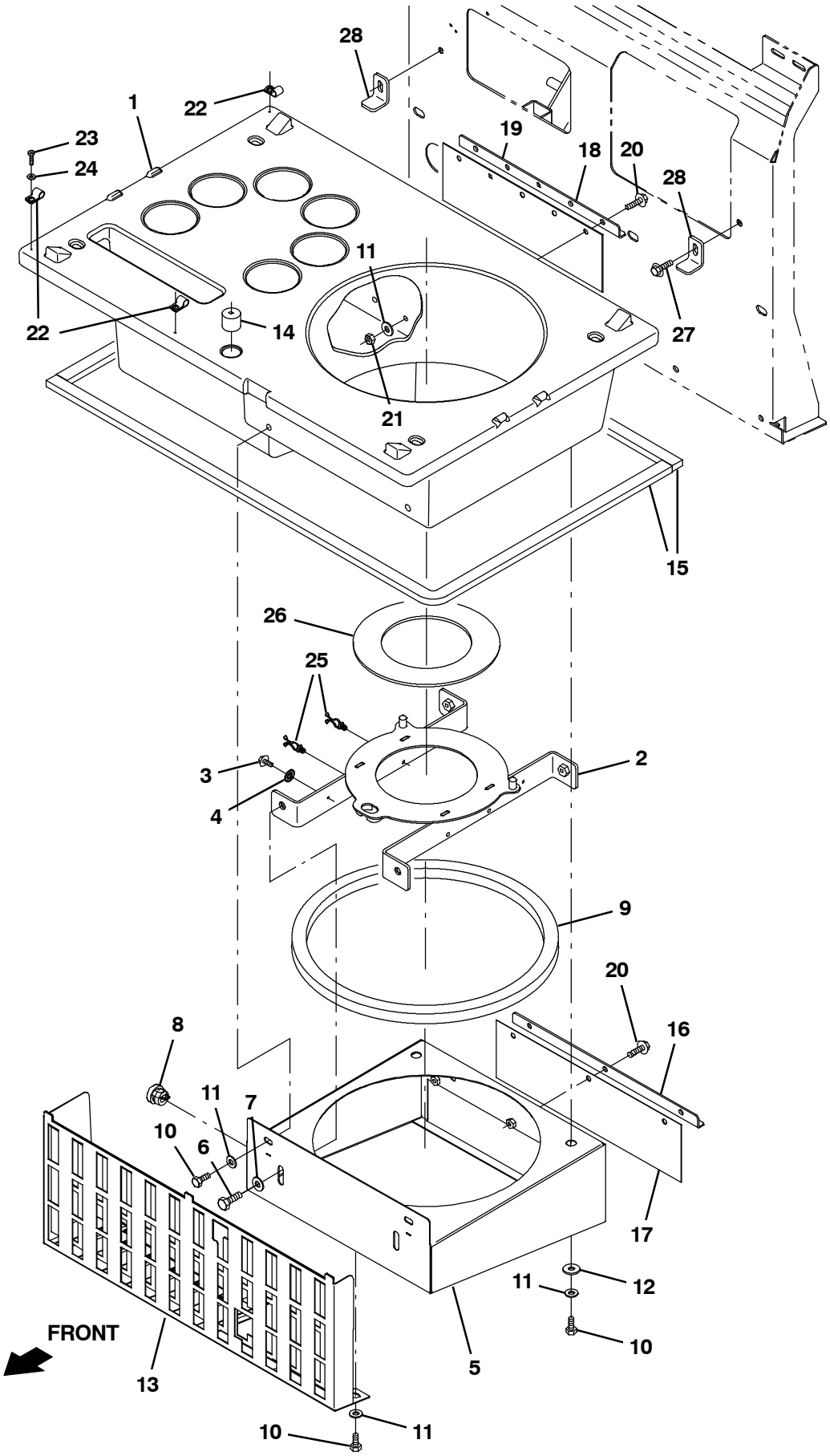

354916 - NA

Fig. 34 - Hopper Filter Shaker Tray Group

Ref.	Part No.	Serial Number	Description	Qty.
1	1043815	(000000-)	Tray, Mold	1
2	1044285	(000000-)	Tray, Dust, Shakr	1
3	74455	(000000-)	Screw, Hex, M6 X 1.00 X 12, Fmg	1
4	41140	(000000-)	Washer, Lock, Int- Ext, 0.25	1
5	1043383	(000000-)	Tray Wldt, Dust [Cyclone]	1
6	06961	(000000-)	Screw, Hex, M10 X 1.50 X 20, 8.8	4
7	32492	(000000-)	Washer, Flat, 0.38, Std	6
8	1051199	(000000-)	Strainrelief	1
9	1050106	(000000-)	Gasket, Tray	1
10	16735	(000000-)	Screw, Hex, M8 X 1.25 X 16, 8.8	7
11	32491	(000000-)	Washer, Flat, 0.31, Std	8
12	30013	(000000-)	Washer, Flat, 0.31, Fendr	2
13	1039250	(000000-)	Plate Wldt, Perma- Filter	1
14	1049982	(000000-)	Seal, Foam	1
15	1050106	(000000-)	Gasket, Tray	2
16	1042282	(000000-)	Retainer, Seal, Dust, .12 X 0.8w X 33.6l	1
17	1042285	(000000-)	Seal Assy, Pre- Filter	1
18	1049408	(000000-)	Retainer, Seal, Dust, .12 X 0.8w X 33.6l	1
19	1049409	(000000-)	Seal Assy, Pre- Filter	1
20	1037355	(000000-)	Screw, Hex, M8 X 1.25 X 35, 9.8, Sems	8
21	08709	(000000-)	Nut, Hex, Lock, M8 X 1.25, Nl	5
22	67767	(000000-)	Clamp, Cable, Stl, 0.69d X 0.62w, 1hole	3
23	360943	(000000-)	Screw, Pan, Phl, 10- 14 X 0.75, F/ Plstc	1
24	19066	(000000-)	Washer, Flat, 10	1
25	30406	(000000-)	Clip, Keeper	3
26	1044351	(000000-)	Spacer, Fltr	1
27	1037346	(000000-)	Screw, Hex, M8 X 1.25 X 25, 9.8, Sems	2
28	1052919	(000000-)	Bracket, Tray	2

Fig. 35 - Hopper Filter Shaker Cover Group

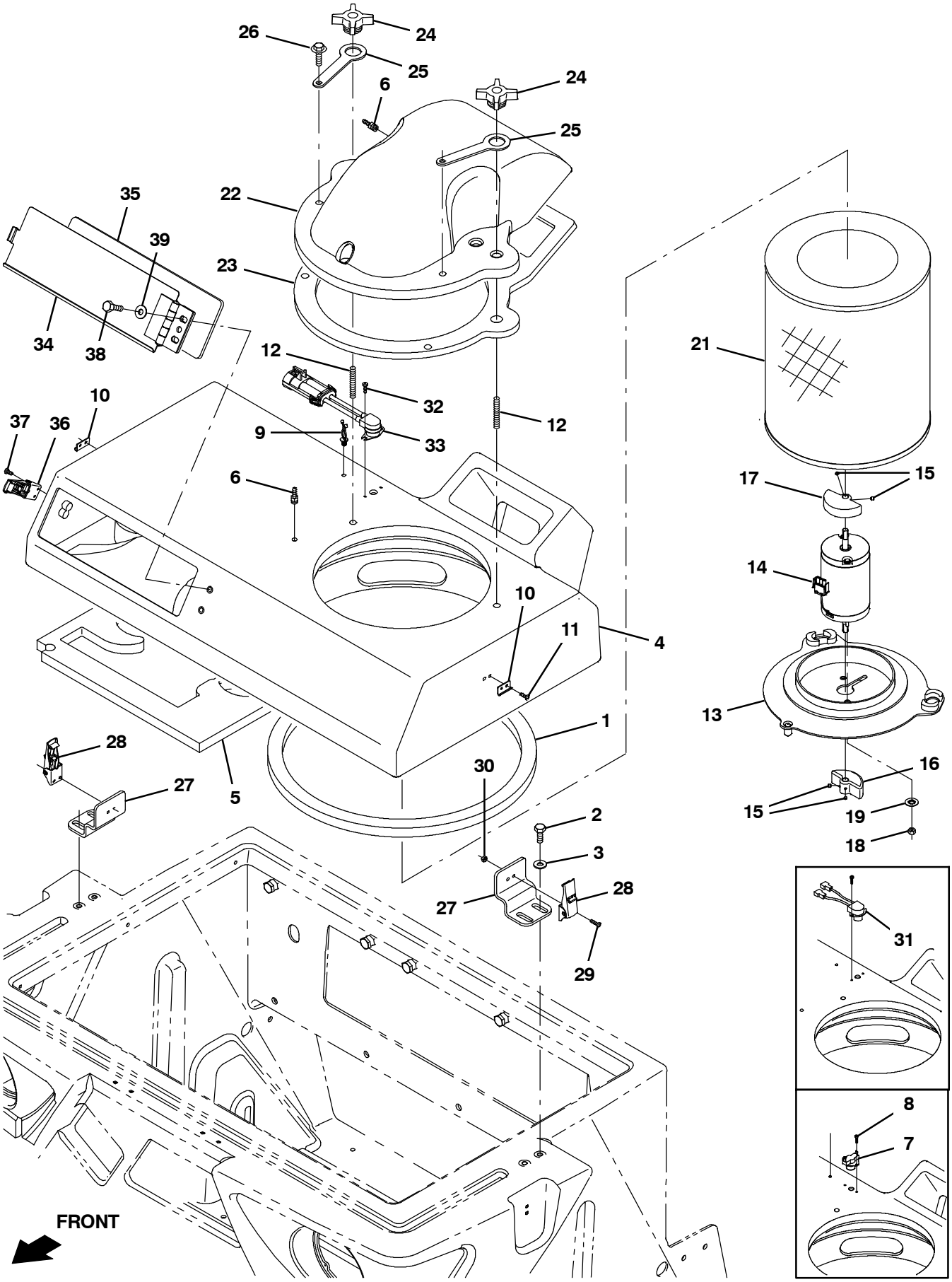

356813 - IC, NA

Fig. 34 - Hopper Filter Shaker Cover Group

Ref.	Part No.	Serial Number	Description	Qty.
1	1050106	(000000-)	Gasket, Tray	1
2	16735	(000000-)	Screw, Hex, M8 X 1.25 X 16, 8.8	7
3	32491	(000000-)	Washer, Flat, 0.31, Std	8
4	1043818	(000000-)	Cover, Mold	1
5	1057959	(000000-)	Gasket, Tray	1
6	40607	(000000-)	Fitting, Brs, Str, Bm03/Pm02	2
7	87546	(000000- 001070)	Sensor, Thermal, 140deg, No, Spst	1
8	360973	(000000- 001070)	Screw, Pan, 12- 16 X 0.50, F/ Plstc	2
9	30406	(000000-)	Clip, Keeper	3
10	384419	(000000-)	Bracket, Latch, Keeper [Southco]	2
11	49697	(000000-)	Screw, Pan, Phl, M4 X 0.70 X 10, Ss	4
12	1049860	(000000-)	Stud, M8 X 1.25 [55.0]	2
13	1044352	(000000-)	Bracket Wldt, Fltr	1
14	1075327	(000000-)	Motor, Ele, 12vdc 2108rpm 0.09hp 07.0a	1
15	39322	(000000-)	Screw, Set, Soc, 10- 24 X 0.38, Al	4
16	1053321	(000000-)	Weight, Eccentric, Pntd	1
17	1053291	(000000-)	Weight, Eccentric, Pntd	1
18	86618	(000000-)	Nut, Hex, Lock, #10- 32, Nl	2
19	07514	(000000-)	Washer, Lock, Int, 10, Ss	2
20	1044351	(000000-)	Spacer, Fltr	1
21	1045900	(000000-)	Filter, Cyl, 11.09d, 13.31l, 6.724 Id	1
22	1043819	(000000-)	Elbow, Mold	1
23	1044356	(000000-)	Gasket, Cover	1
24	1048335	(000000-)	Knob, Star, 2.75d 4ear 1.1l M8x1.25	2
25	1048353	(000000-)	Strap, Rbr	2
26	1037346	(000000-)	Screw, Hex, M8 X 1.25 X 25, 9.8, Sems	4
27	1044146	(000000-)	Bar, Cover	1
28	384418	(000000-)	Latch, Door [Southco 91- 562- 07]	2
29	24265	(000000-)	Screw, Pan, Phl, M4 X 0.70 X 16, Ss	4
30	02850	(000000-)	Nut, Hex, Lock, M4 X 0.70, Nl	4
31	1056298	(001071- 001361)	Switch, Temp, Sealed, Nc	1
32	763149	(001071-)	Screw, Pan, 06- X 0.38, F/ Plstc	2
33	1061575	(001362-)	Switch, Temp, Sealed, Nc	1
34	1076311	(006266-)	Door Wldt, Cleanout [S20]	1
35	1236153	(006266-)	Seal, Cleanout Door	1
36	384418	(006266-)	Latch, Door [Southco 91- 562- 07]	1
37	24265	(006266-)	Screw, Pan, Phl, M4 X 0.70 X 16, Ss	2
38	15675	(006266-)	Screw, Hex, M8 X 1.25 X 30, 8.8	2
39	01685	(006266-)	Washer, Flat, 0.32b 1.00d .12, Ss	2

Fig. 36 - Hydraulic Pump Linkage Group

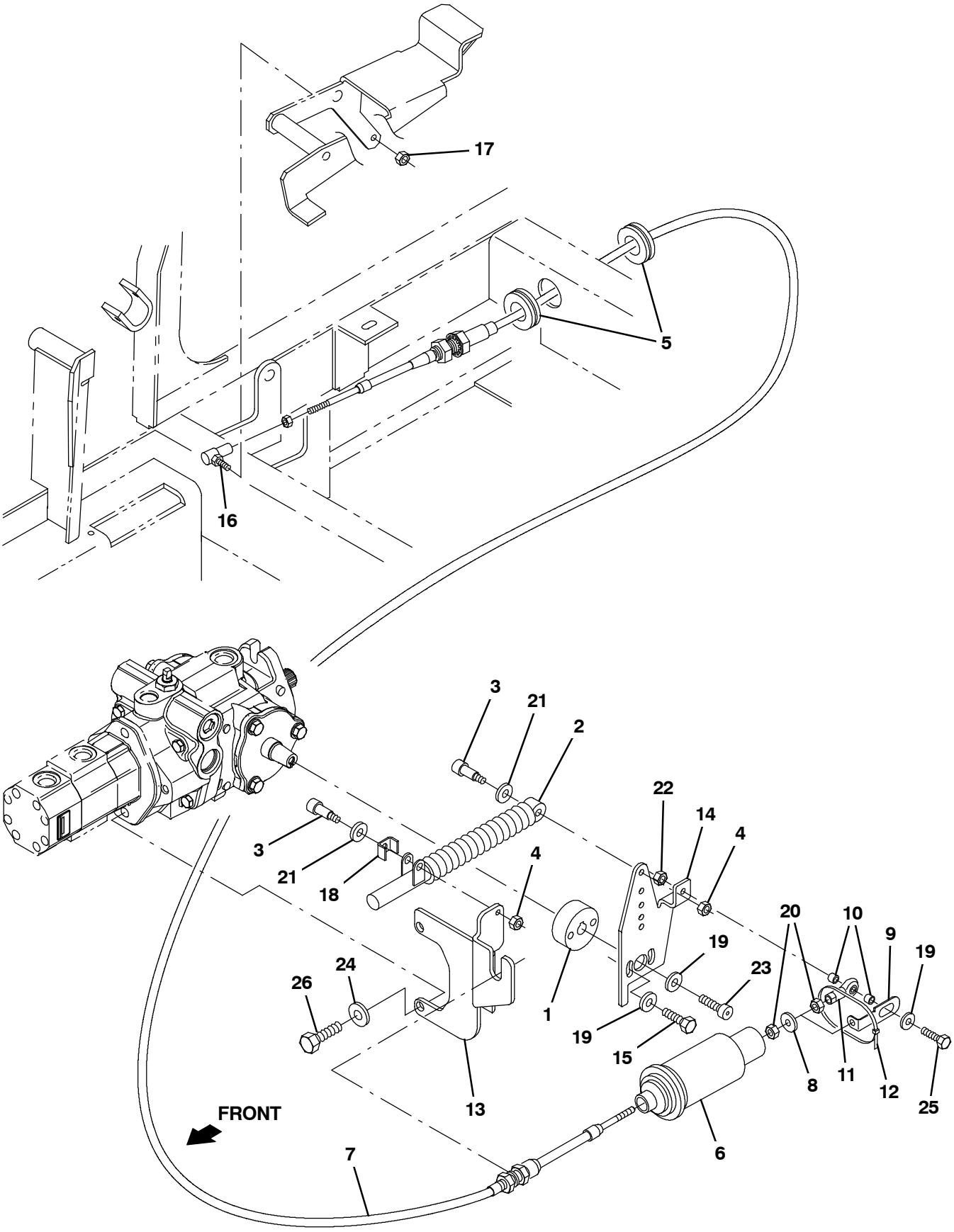

354927 - IC

Fig. 36 - Hydraulic Pump Linkage Group

Ref.	Part No.	Serial Number	Description	Qty.
1	72728	(000000-)	Hub, Mtg, Arm, Cntrl, Pintle	1
2	73411	(000000-)	Shock Absorber, 2.3 Strk	1
3	16213	(000000-)	Bolt, Shld, .31d X 1.00, .25- 20	2
4	75934	(000000-)	Nut, Hex, Lock, .25- 20, Nl	2
5	10632- 1	(000000-)	Grommet, Rbr, 1.06id, F/1.4h, .19 Matl	2
6	1058032	(000000-)	Spring Assy, Centering10/15 Lb Preload]	1
7	360442	(000000-)	Cable, Push / Pull, 092.0l .25- 28/.25- 28	1
8	78785	(000000-)	Washer, Flat, 0.25b 0.88d .06, Neo	1
9	83887	(000000-)	Bracket, Clip, Safety	1
10	65441	(000000-)	Tube, 0.26id 0.38od 00.3l, Stl, Pl	2
11	68866	(000000-)	Rod- End, 0.25- 28rh Fem 0.25b [Teflon]	1
12	49266	(000000-)	Tie, Cable, Nyl, 07.3l .19w 1.8 Max D	1
13	1046046	(000000-)	Bracket, Mtg, Cable, Propel	1
14	1046635	(000000-)	Bracket, Mtg, Cable, Propel	1
15	16931	(000000-)	Screw, Hex, M8 X 1.25 X 20, 8.8	2
16	14601	(000000-)	Balljoint, .25- 28 Fem, .25- 28 Mal	1
17	13513	(000000-)	Nut, Hex, Lock, .25- 28, Nl	1
18	84170	(000000-)	Bracket, Retainer, Safety	1
19	32490	(000000-)	Washer, Flat, 0.25, Std	4
20	01714	(000000-)	Nut, Hex, Std, .25- 28	3
21	39349	(000000-)	Washer, Flat, 0.31, Sae	2
22	32981	(000000-)	Nut, Hex, Lock, .25- 20, Nl	1
23	39987	(000000-)	Screw, Soc, .31- 24 X 0.75, Al	1
24	32485	(000000-)	Washer, Flat, 0.38, Sae	2
25	25049	(000000-)	Screw, Hex, .25- 20 X 1.75, G5	1
26	27988	(000000-)	Screw, Hex, .38- 16 X 1.50, G5	2

Fig. 37 - Hydraulic Schematic

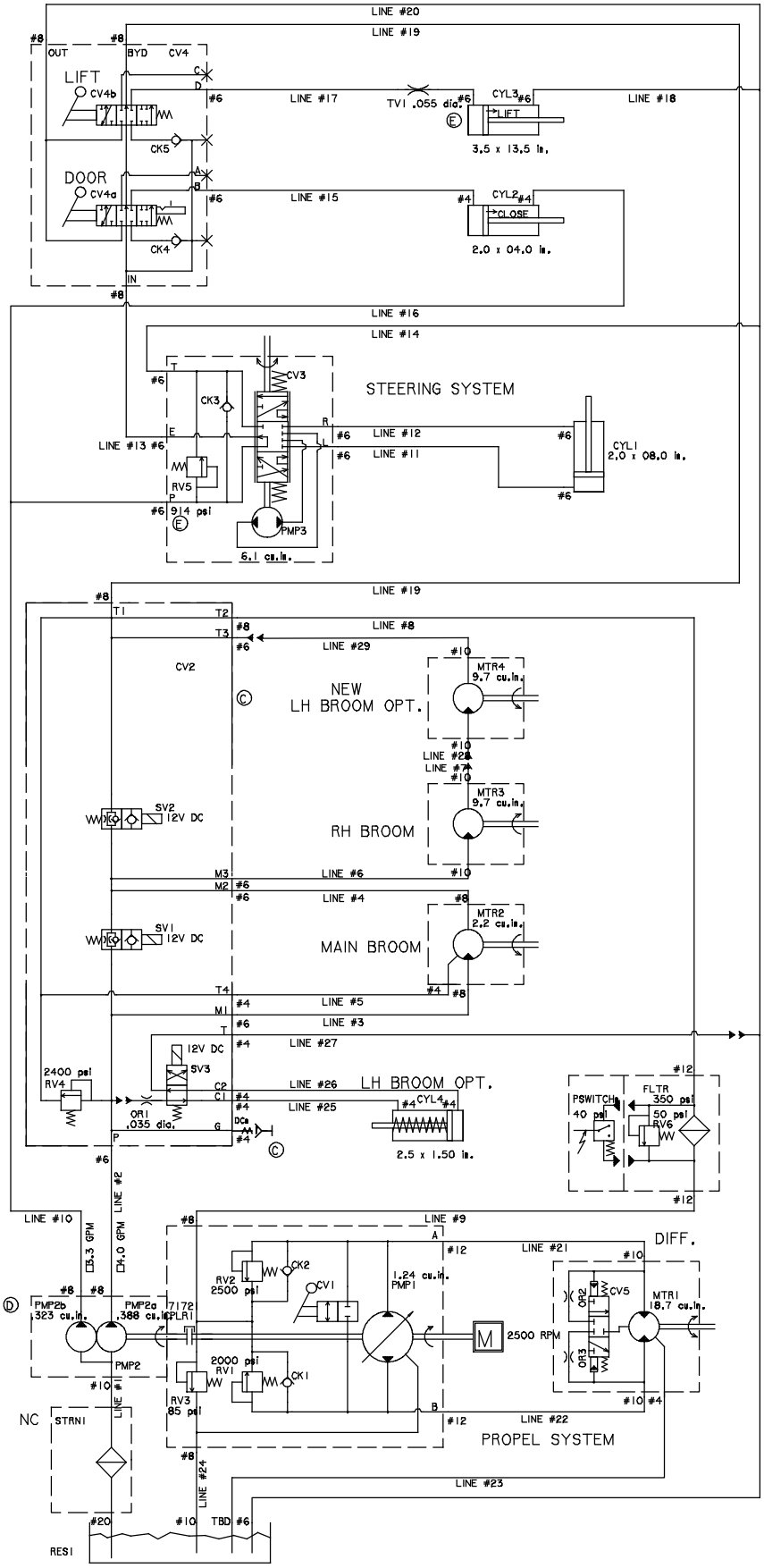

354979 - 1048768

Fig. 38 - Hydraulic Hose Group (000000-002999)

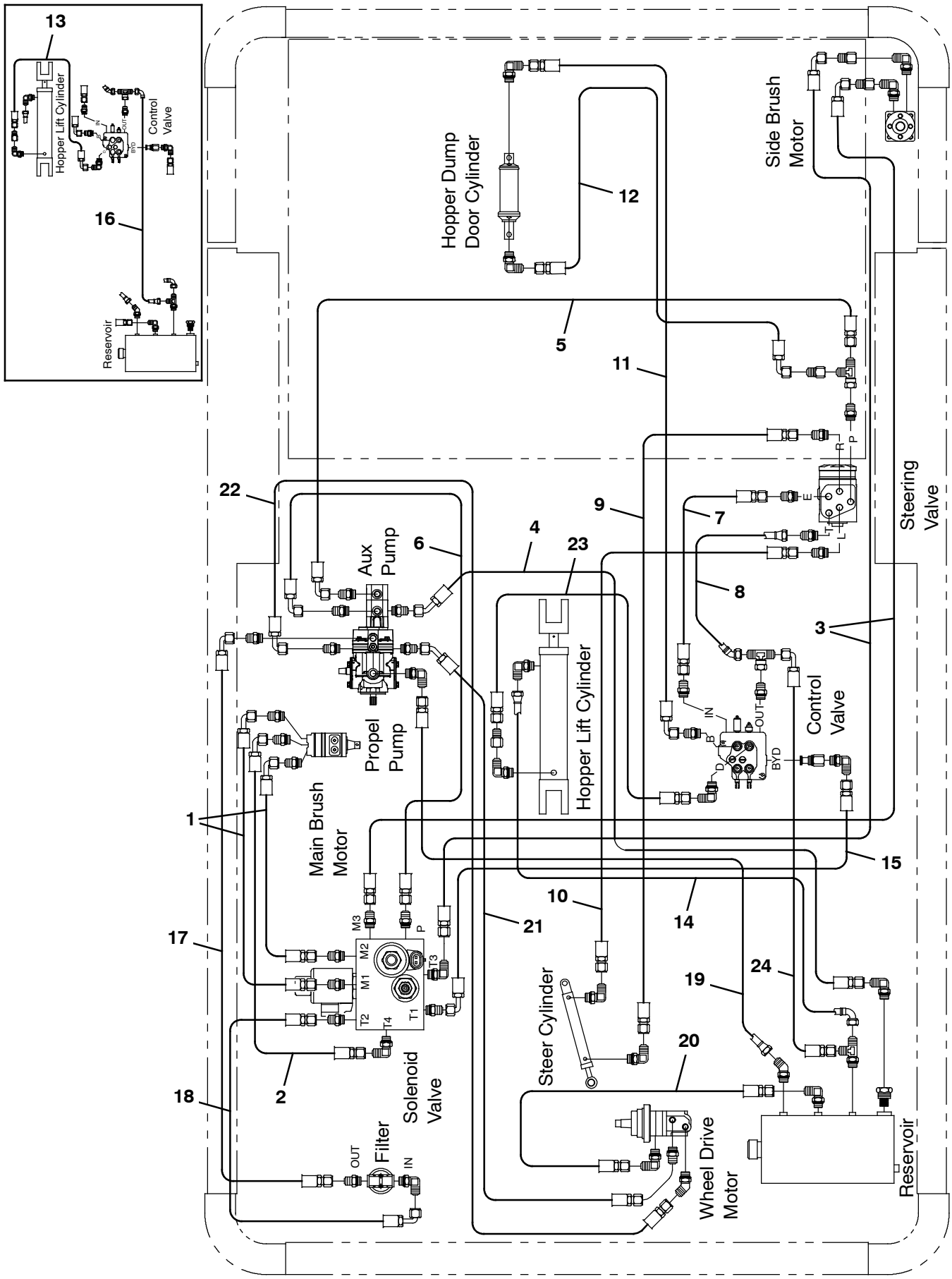

354962 - D, NA

Fig. 38 - Hydraulic Hose Group (000000-002999)

Ref.	Part No.	Serial Number	Description	Qty.
1	361040	(000000-)	Hose, Hyd, Tc06, Jf06e90/Jf06str, 034.0	2
2	361009	(000000-)	Hose, Hyd, Tc04, Jf04e90/Jf04str, 036.0	1
3	361041	(000000-)	Hose, Hyd, Med06, Jf06e90/Jf06str, 114.0	2
4	361042	(000000-)	Hose, Hyd, Suc12, Jf12e45/Jf12str, 048.0	1
5	1052527	(000000-)	Hose, Hyd, Tc06, Jf06e90/Jf06str, 032.0	1
6	1052524	(000000-)	Hose, Hyd, Tc06, Jf06e90/Jf06str, 029.0	1
7	361044	(000000-)	Hose, Hyd, Med06, Jf06str/Jf06str, 018.0	1
8	361086	(000000-)	Hose, Hyd, Med06, Jf06e45/Jf06str, 017.0	1
9	1046155	(000000-)	Hose, Hyd, Tc06, Jf06str/Jf06str, 039.0	1
10	1046156	(000000-)	Hose, Hyd, Tc06, Jf06str/Jf06str, 032.0	1
11	1027321	(000000-)	Hose, Hyd, Tc04, Jf04str/Jf04e90, 070.0	1
12	57962	(000000-)	Hose, Hyd, Med04, Jf04e90/Jf04str, 064.0	1
13	1045707	(000000- 001239)	Hose, Hyd, Tc04, Jf04e90/Jf04str, 025.0	1
14	9000351	(000000-)	Hose, Hyd, Tc06, Jf06e90/Jf06str, 028.0	1
15	1045478	(000000-)	Hose, Hyd, Med06, Jf06e90/Jf06str, 042.0	1
16	1047709	(000000- 001239)	Hose, Hyd, Med06, Jf06e90/Jf06str, 044.0	1
17	1047676	(000000-)	Hose, Hyd, Med08, Jf08e90/Jf08str, 072.0	1
18	1047578	(000000-)	Hose, Hyd, Med08, Jf08e90/Jf08str, 048.0	1
19	1049795	(000000-)	Hose, Hyd, Med08, Jf08str/Jf08str, 036.0	1
20	1051572	(000000-)	Hose, Hyd, Med04, Jf04str/Jf04str, 060.0	1
21	361052	(000000-)	Hose, Hyd, Tc10, Jf10e45/Jf10str, 056.0	1
22	361050	(000000-)	Hose, Hyd, Tc10, Jf10e90/Jf10str, 074.0	1
23	1036903	(001240-)	Hose, Hyd, Tc04, Jf04str/Jf04str, 025.0	1
24	1045478	(001240-)	Hose, Hyd, Med06, Jf06e90/Jf06str, 042.0	1

Fig. 39 - Hydraulic Hose Group (003000-)

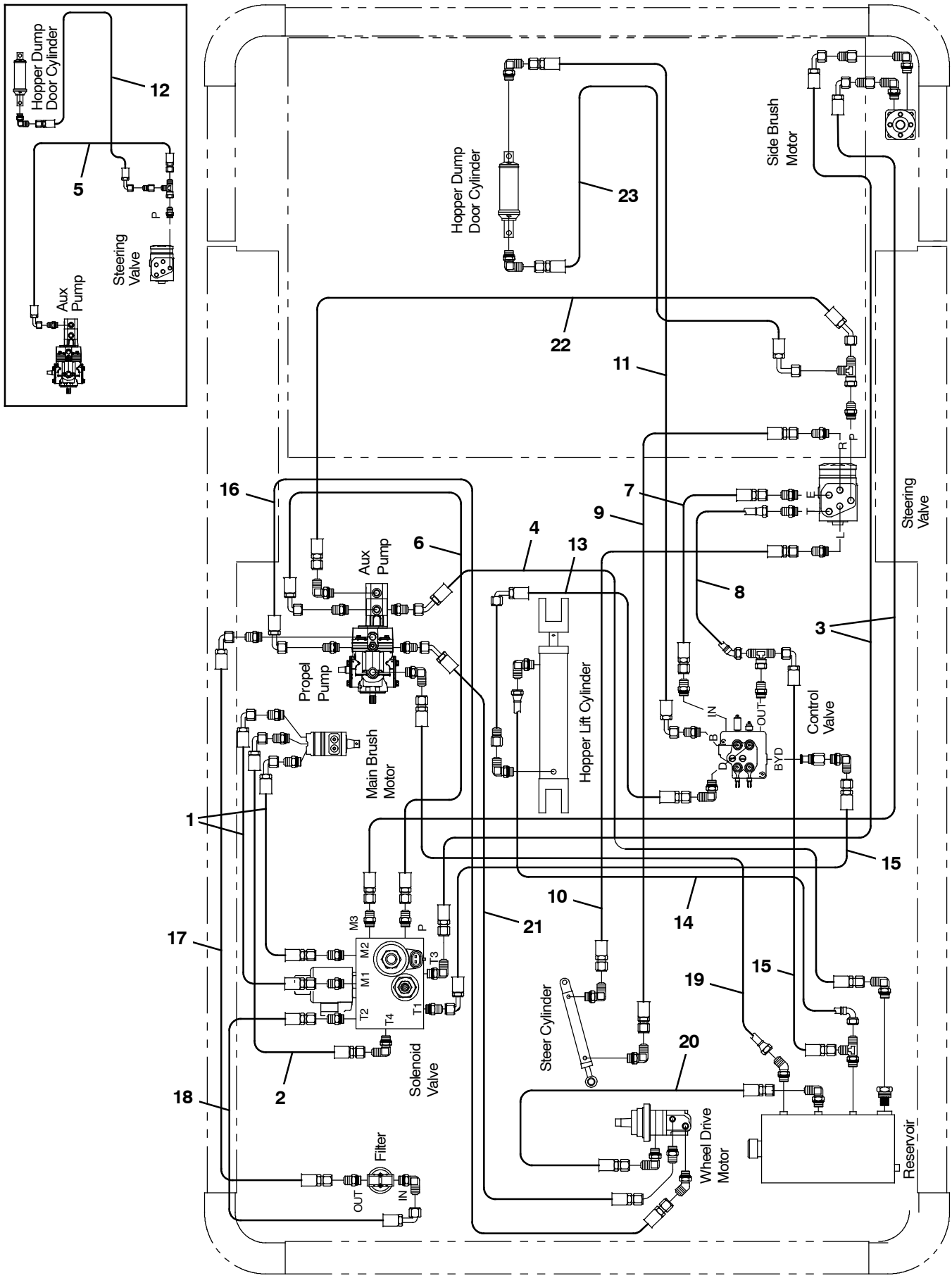

354962 - D, NA

Fig. 39 - Hydraulic Hose Group (003000-)

Ref.	Part No.	Serial Number	Description	Qty.
1	1071718	(003000-)	Hose, Hyd, Tc06, Of06e90/Of06str, 34.0	2
2	1071719	(003000-)	Hose, Hyd, Tc04, Of04e90/Of04str, 36.0	1
3	1071720	(003000-)	Hose, Hyd, Med06, Of06e90/Of06str, 114.0	2
4	1071728	(003000-)	Hose, Hyd, Suc12, Of12e45/Of12str, 048.0	1
5	1071729	(003000- 005910)	Hose, Hyd, Tc06, Of06e90/Of06str, 032.0	1
6	1071730	(003000-)	Hose, Hyd, Tc06, Of06e90/Of06str, 029.0	1
7	1071731	(003000-)	Hose, Hyd, Med06, Of06str/Of06str, 018.0	1
8	1071748	(003000-)	Hose, Hyd, Med06, Of06e90/Of06str, 020.0	1
9	1071732	(003000-)	Hose, Hyd, Tc06, Of06str/Of06str, 039.0	1
10	1071733	(003000-)	Hose, Hyd, Tc06, Of06str/Of06str, 032.0	1
11	1071734	(003000-)	Hose, Hyd, Tc04, Of04str/Of04e90, 070.0	1
12	1071735	(003000- 005910)	Hose, Hyd, Med04, Of04e90/Of04str, 064.0	1
13	1071744	(003000-)	Hose, Hyd, Tc04, Of04e90/Of04str, 020.0	1
14	1071736	(003000-)	Hose, Hyd, Tc06, Of06e90/Of06str, 028.0	1
15	1071737	(003000-)	Hose, Hyd, Med06, Of06e90/Of06str, 042.0	2
16	1071743	(003000-)	Hose, Hyd, Tc10, Of10e90/Of10str, 074.0	1
17	1071738	(003000-)	Hose, Hyd, Med08, Of08e90/Of08str, 072.0	1
18	1071739	(003000-)	Hose, Hyd, Med08, Of08e90/Of08str, 048.0	1
19	1071740	(003000-)	Hose, Hyd, Med08, Of08str/Of08str, 036.0	1
20	1071741	(003000-)	Hose, Hyd, Med04, Of04str/Of04str, 060.0	1
21	1071742	(003000-)	Hose, Hyd, Tc10, Of10e45/Of10str, 056.0	1
22	1075616	(005911-)	Hose, Hyd, Tc06, Of06e45/Of06str, 032.0	1
23	1075615	(005911-)	Hose, Hyd, Tc04, Of06e90/Of04str, 064.0	1

Fig. 40 - Hydraulic Pumps Group

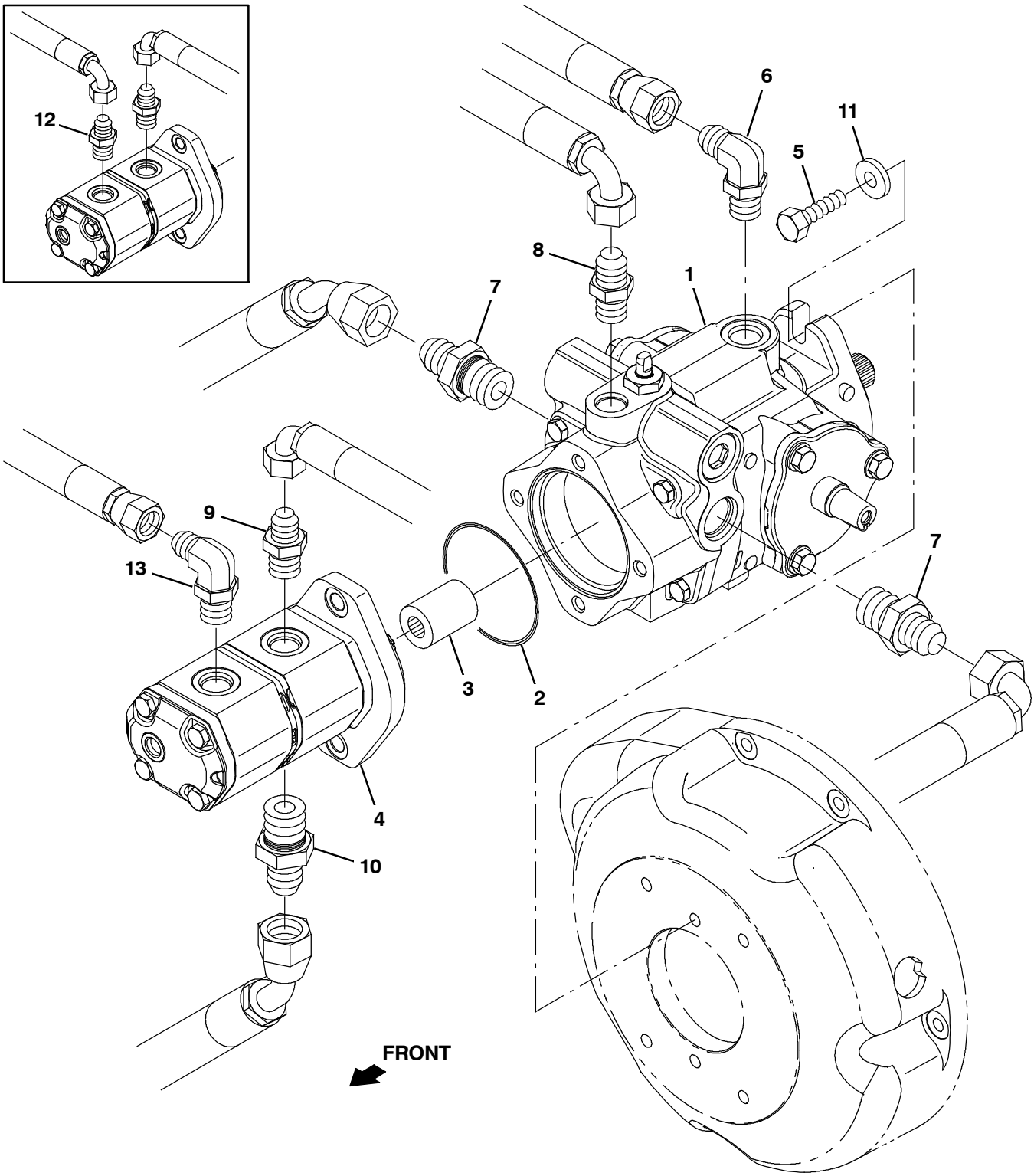

354965 - IC, NA

Fig. 40 - Hydraulic Pumps Group

Ref.	Part No.	Serial Number	Description	Qty.
1	1045993	(000000-)	Pump, Hyd, Piston, Var, 1.24 2500, Cw (See Breakdowns)	1
2	65145- 1	(000000-)	Seal, Org, .069 X 03.06id	1
3	71721	(000000-)	Coupling, Drive, 1.2d 1.5l 09tooth	1
4	361018	(000000- 004459)	Pump, Hyd, Gear, Ext, 2, 00.39 1600, Cw (See Breakdowns) (Replaced by 1071256)	1
4	1071256	(004460-)	Pump, Hyd, Gear, Ext, 2, 6.2cc 5.2cc	1
5	03192	(000000-)	Screw, Hex, M10 X 1.50 X 30, 8.8	2
6	44868	(000000- 002999)	Fitting, Hyd, E90, Jm08/Om08	1
6	762446	(003000-)	Fitting, Hyd, E90, Fm08/Om08	1
7	42223	(000000- 002999)	Fitting, Hyd, Str, Jm10/Om12	2
7	762468	(003000-)	Fitting, Hyd, Str, Fm10/Om12	2
8	44869	(000000- 002999)	Fitting, Hyd, Str, Jm08/Om08	2
8	762445	(003000-)	Fitting, Hyd, Str, Fm08/Om08	2
9	52402	(000000- 002999)	Fitting, Hyd, Str, Jm06/Om08	1
9	762438	(003000-)	Fitting, Hyd, Str, Fm06/Om08	1
10	06750	(000000- 002999)	Fitting, Hyd, Str, Jm12/Om10	1
10	1071945	(003000-)	Fitting, Hyd, Str, Fm12/Om10	1
11	32485	(000000-)	Washer, Flat, 0.38, Sae	2
12	52402	(000000- 002999)	Fitting, Hyd, Str, Jm06/Om08	1
12	762438	(003000- 005910)	Fitting, Hyd, Str, Fm06/Om08	1
13	762437	(005911-)	Fitting, Hyd, E90, Fm06/Om08	1

Fig. 41 - Hydraulic Reservoir Group

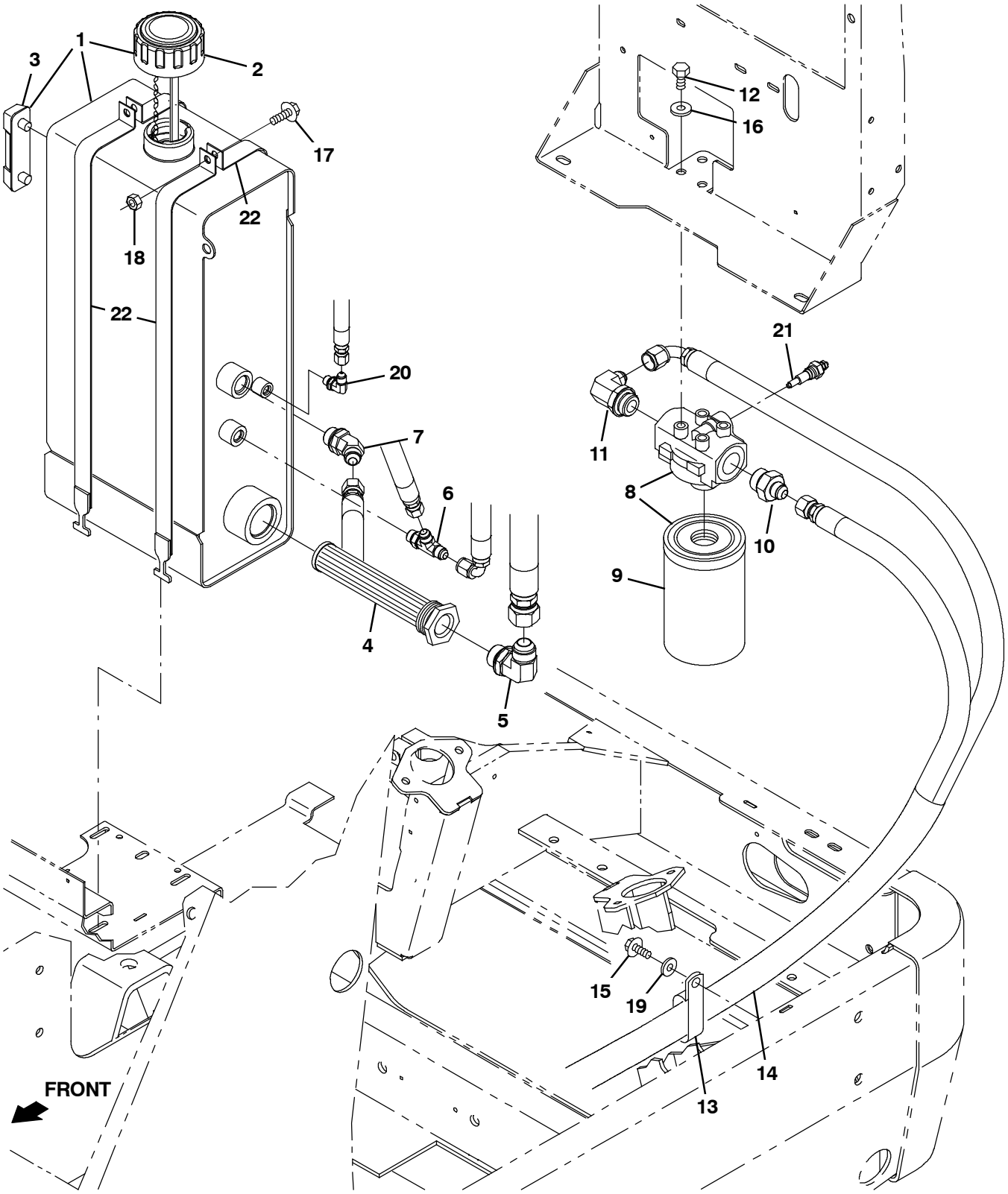

354963 - IC, NA

Fig. 41 - Hydraulic Reservoir Group

	Ref.	Part No.	Serial Number	Description	Qty.
▽	1	1074448	(005694-)	Reservoir, Hyd, 05.1gal	1
▲	2	360991	(000000-)	Cap, Breather, Hyd, 5.2 Ds	1
▲		70006	(000000-)	Gasket, Cap, Breather, Hyd	1
▲	3	65215	(005694-)	Gauge, Sensing, Level	1
	1	1048422	(000000- 005693)	Reservoir Assy, Hyd	1
	4	361023	(000000-)	Strainer, Hyd, 010gpm 100mesh	1
	5	46481	(000000- 002999)	Fitting, Hyd, E90, Jm12/Om12	1
	5	762492	(003000-)	Fitting, Hyd, E90, Fm12/Om12	1
	6	76316	(000000- 002999)	Fitting, Hyd, Tee, Jm06/Jm06/Om06, Run	1
	6	762434	(003000-)	Fitting, Hyd, Tee, Fm06/Fm06/Om06, Run	1
	7	47513	(000000- 002999)	Fitting, Hyd, E45, Jm08/Om10	1
	7	762461	(003000-)	Fitting, Hyd, E45, Fm08/Om10	1
▽	8	10664	(000000-)	Filter Assy, Hyd, 10mic 035gpm, Spin- On	1
▲	9	65221	(000000-)	Element, Fltr, Hyd Oil	1
	10	42227	(000000- 002999)	Fitting, Hyd, Str, Jm08/Om12	1
	10	762457	(003000-)	Fitting, Hyd, Str, Fm08/Om12	1
	11	47655	(000000- 002999)	Fitting, Hyd, E90, Jm08/Om12	1
	11	762462	(003000-)	Fitting, Hyd, E90, Fm08/Om12	1
	12	21195	(000000-)	Screw, Hex, .38- 16 X 0.75, G5	4
	13	67366	(000000-)	Clamp, Cable, Stl, 1.0x2.0x0.62w, 1hole	1
	14	31646	(000000-)	Sleeve, Nyl, 1.63id 25.0l	1
	15	12459	(000000-)	Screw, Hex, M6 X 1.00 X 20, Fmg	1
	16	32485	(000000-)	Washer, Flat, 0.38, Sae	4
	17	1037354	(000000-)	Screw, Hex, M8 X 1.25 X 30, 9.8, Sems	2
	18	08709	(000000-)	Nut, Hex, Lock, M8 X 1.25, Nl	2
	19	32490	(000000-)	Washer, Flat, 0.25, Std	1
	20	77097	(000000- 002999)	Fitting, Hyd, E90, Jm04/Om04	1
	20	762427	(003000-)	Fitting, Hyd, E90, Fm04/Om04	1
	21	65222	(000000-)	Send- Unit, Fltr, Hyd	1
	22	1049580	(000000- 005693)	Strap Wldt, Tank	4
	22	1074674	(005694-)	Strap Wldt, Tank, Hyd	4

Fig. 42 - Hydraulic Control Valve Group

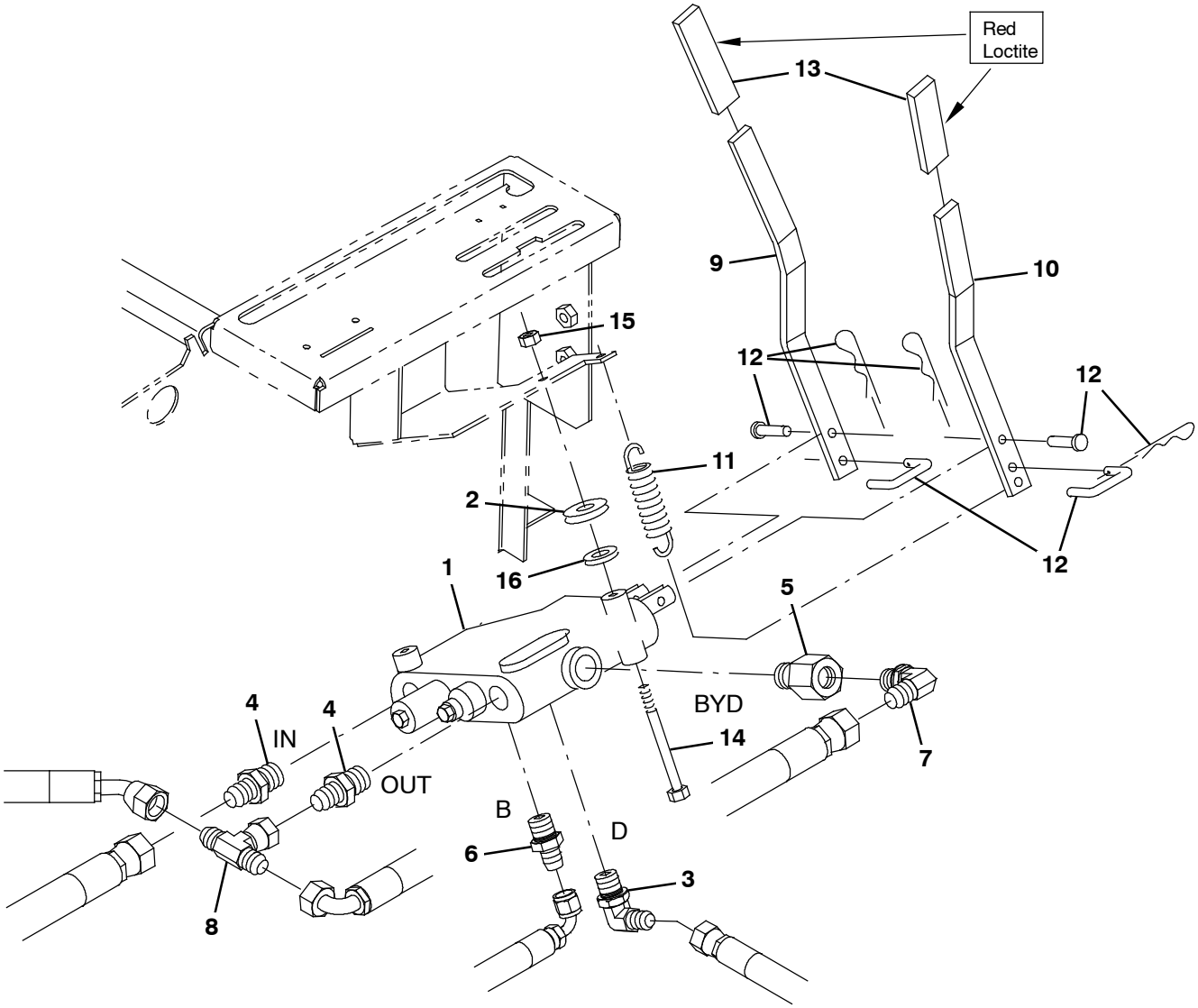

354964 - D, NA

Fig. 42 - Hydraulic Control Valve Group

Ref.	Part No.	Serial Number	Description	Qty.
1	361012	(000000-)	Valve, Hyd, Mnl, 2spool 0100psi 10gpm (See Breakdowns)	1
2	63416	(000000-)	Washer, Flat, 0.31b 0.88d .12, Rbr	2
3	47638	(000000- 002999)	Fitting, Hyd, E90, Jm04/Om06	1
3	762425	(003000-)	Fitting, Hyd, E90, Fm04/Om06	1
4	52402	(000000- 002999)	Fitting, Hyd, Str, Jm06/Om08	2
4	762438	(003000-)	Fitting, Hyd, Str, Fm6/Om08	2
5	361028	(000000-)	Plug Assy, Hyd	1
6	55685	(000000- 002999)	Fitting, Hyd, Str, Jm04/Om06	1
6	762426	(003000-)	Fitting, Hyd, Str, Fm04/Om06	1
7	56820	(000000- 002999)	Fitting, Hyd, E90, Jm06/Om06	1
7	762432	(003000-)	Fitting, Hyd, E90, Fm06/Om06	1
8	35586	(000000- 002999)	Fitting, Hyd, Tee, Jf06/Jm06/Jm06, Br	1
8	1071703	(003000-)	Fitting, Hyd, Tee, F06/Fm06/Fm06, Br	1
9	360062	(000000-)	Handle, Cntrl, Valve	1
10	360063	(000000-)	Handle, Cntrl, Valve	1
11	59870	(000000-)	Spring, Extn, 0.38od 0.05wir 02.5l	1
12	361299	(000000-)	Link Assy, Valve Handle	1
13	360467	(000000-)	Grip, Vyl	2
14	06949	(000000-)	Screw, Hex, M6 X 1.00 X 50, 8.8	2
15	08708	(000000-)	Nut, Hex, Lock, M6 X 1.00, Nl	2
16	32491	(000000-)	Washer, Flat, 0.31, Std	2

Fig. 43 - Hydraulic Solenoid Valve Group

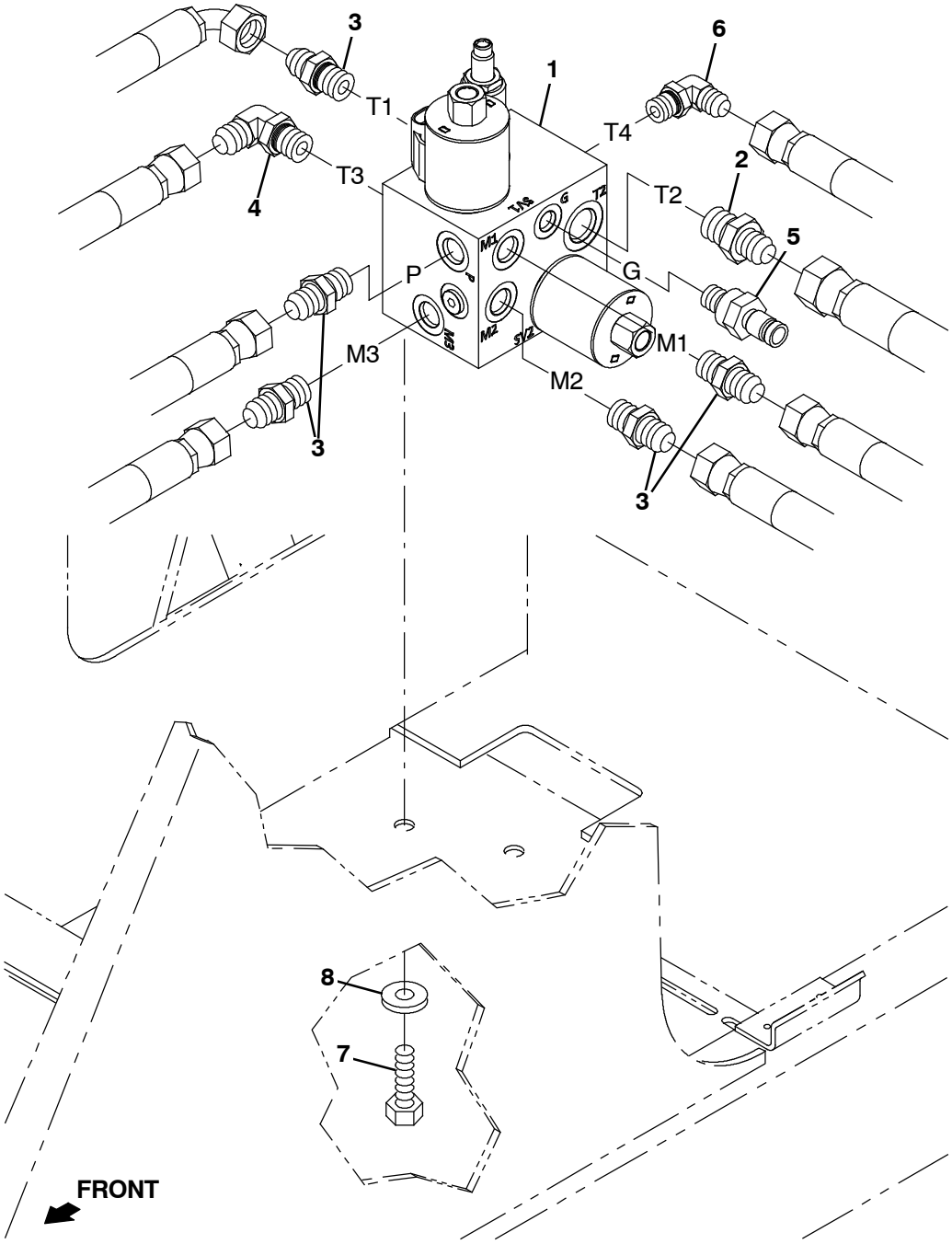

354966 - IC, NA

Fig. 43 - Hydraulic Solenoid Valve Group

Ref.	Part No.	Serial Number	Description	Qty.
1	1046687	(000000- 006465)	Valve, Hyd, Solenoid, 12vdc (See Breakdowns)	1
1	1237087	(006466-)	Valve, Hyd, Solenoid, 12vdc (See Breakdowns)	1
2	44869	(000000- 002999)	Fitting, Hyd, Str, Jm08/Om08	1
2	762445	(003000-)	Fitting, Hyd, Str, Fm08/Om08	1
3	56690	(000000- 002999)	Fitting, Hyd, Str, Jm06/Om06	5
3	762433	(003000-)	Fitting, Hyd, Str, Fm06/Om06	5
4	56820	(000000- 002999)	Fitting, Hyd, E90, Jm06/Om06	1
4	762432	(003000-)	Fitting, Hyd, E90, Fm06/Om06	1
5	395973	(000000-)	Fitting, Hyd, Str, Om04/Qm04	1
6	77097	(000000- 002999)	Fitting, Hyd, E90, Jm04/Om04	1
6	762427	(003000-)	Fitting, Hyd, E90, Fm04/Om04	1
7	06961	(000000-)	Screw, Hex, M10 X 1.50 X 20, 8.8	2
8	32492	(000000-)	Washer, Flat, 0.38, Std	2

Fig. 44 - Electrical Schematic

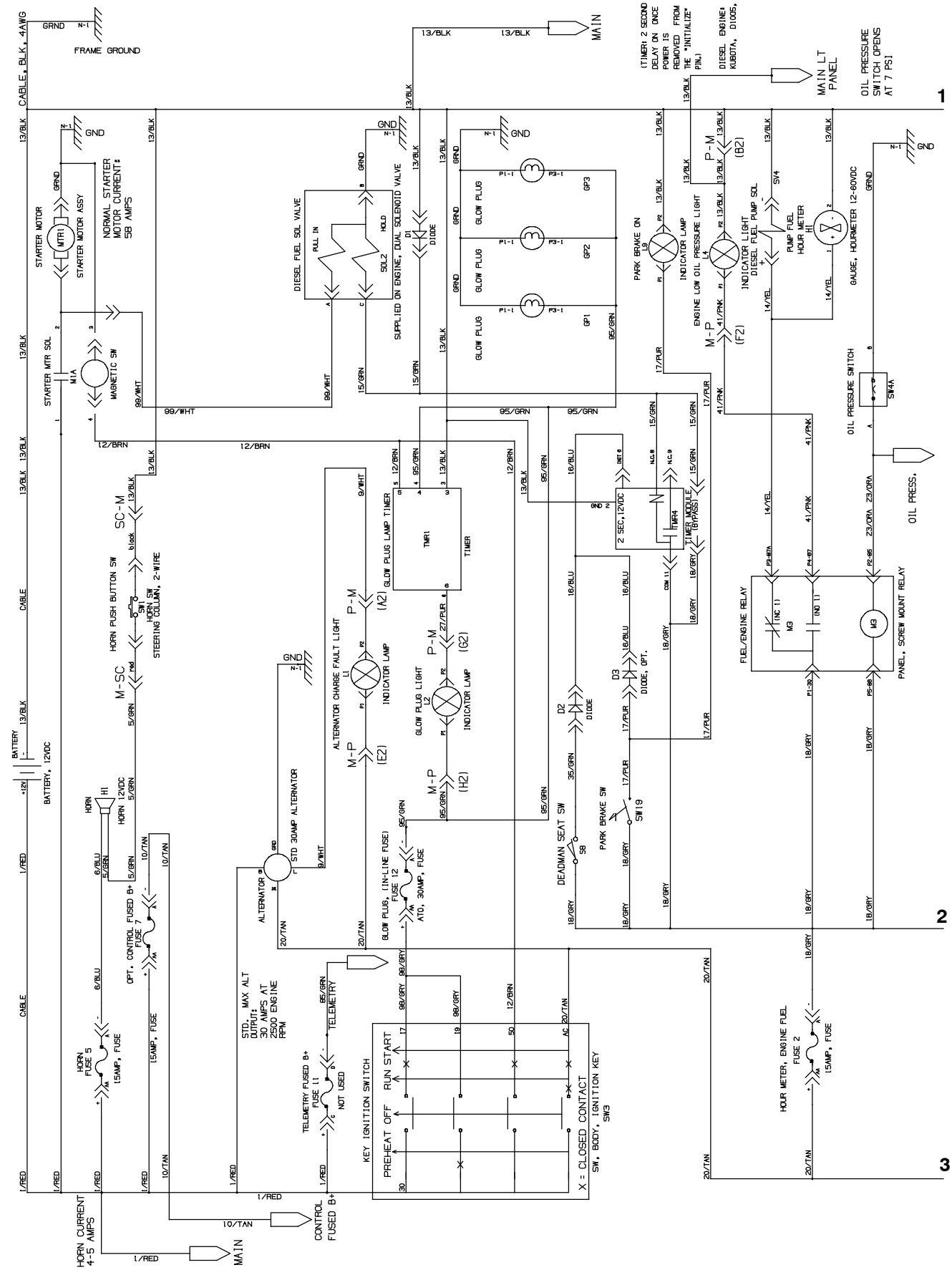

354986, 1048609 - D

Fig. 44 - Electrical Schematic

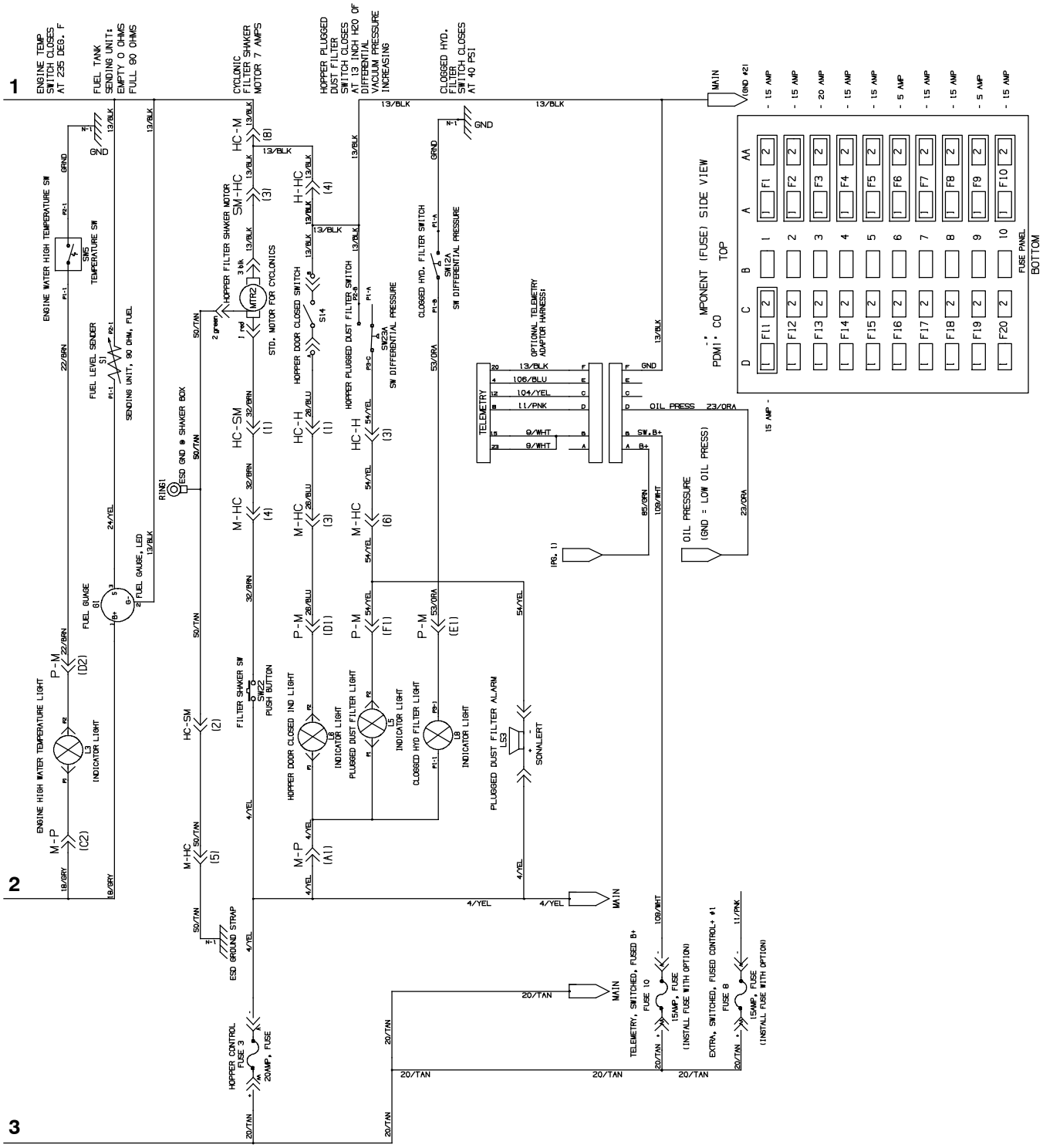

354986, 1048609 - D

Fig. 44 - Electrical Schematic

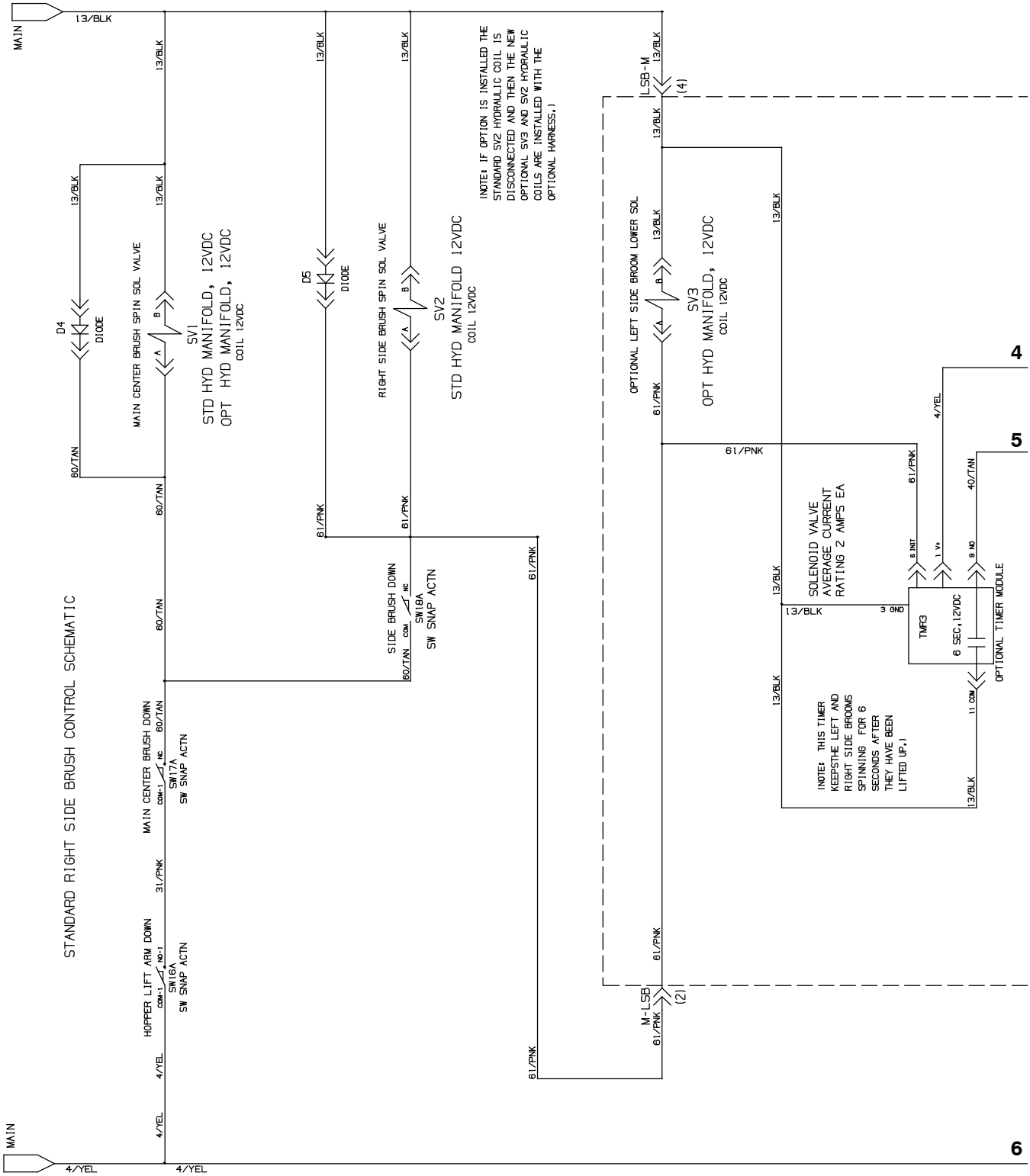

354986, 1048609 - D

Fig. 44 - Electrical Schematic

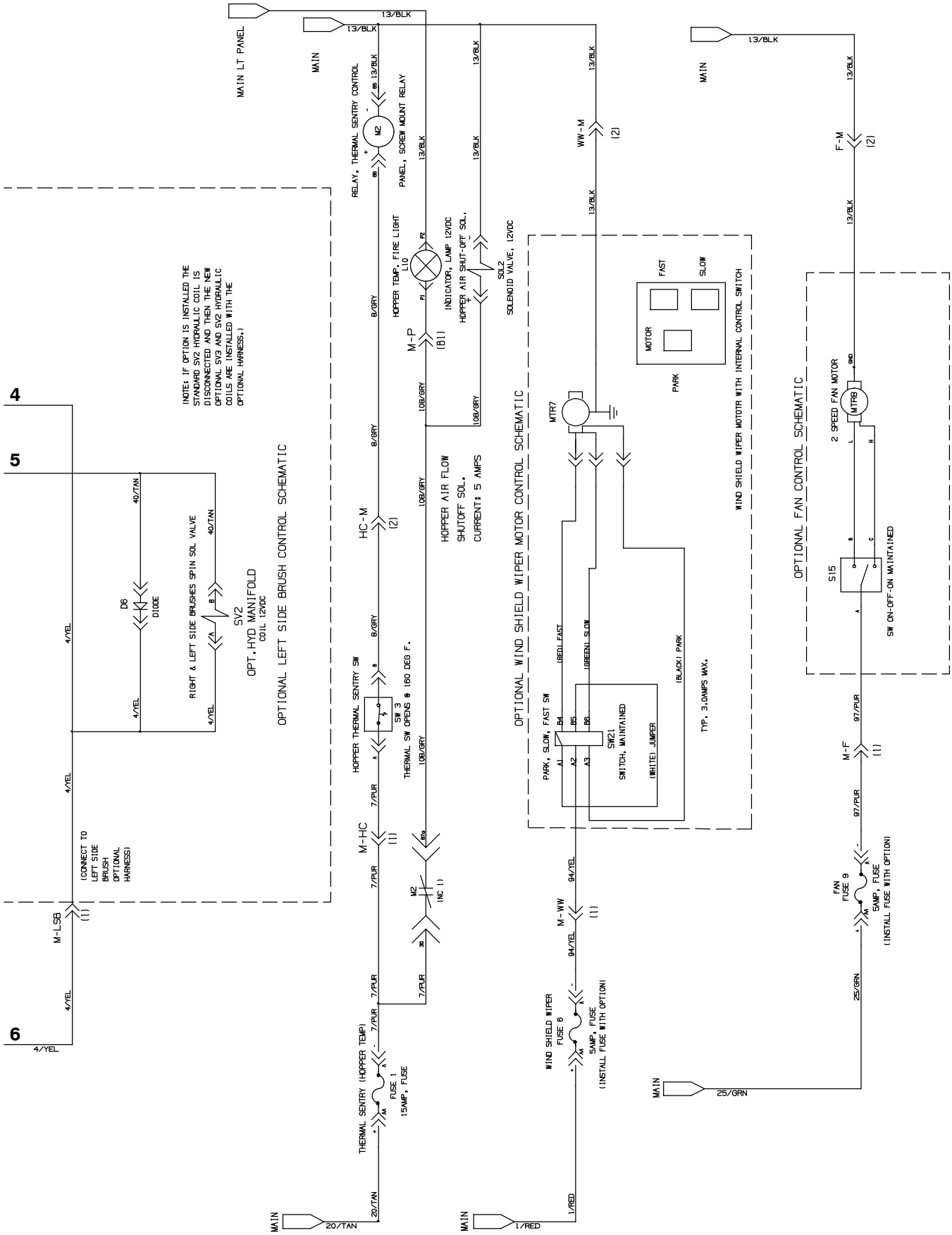

354986, 1048609 - D

Fig. 44 - Electrical Schematic

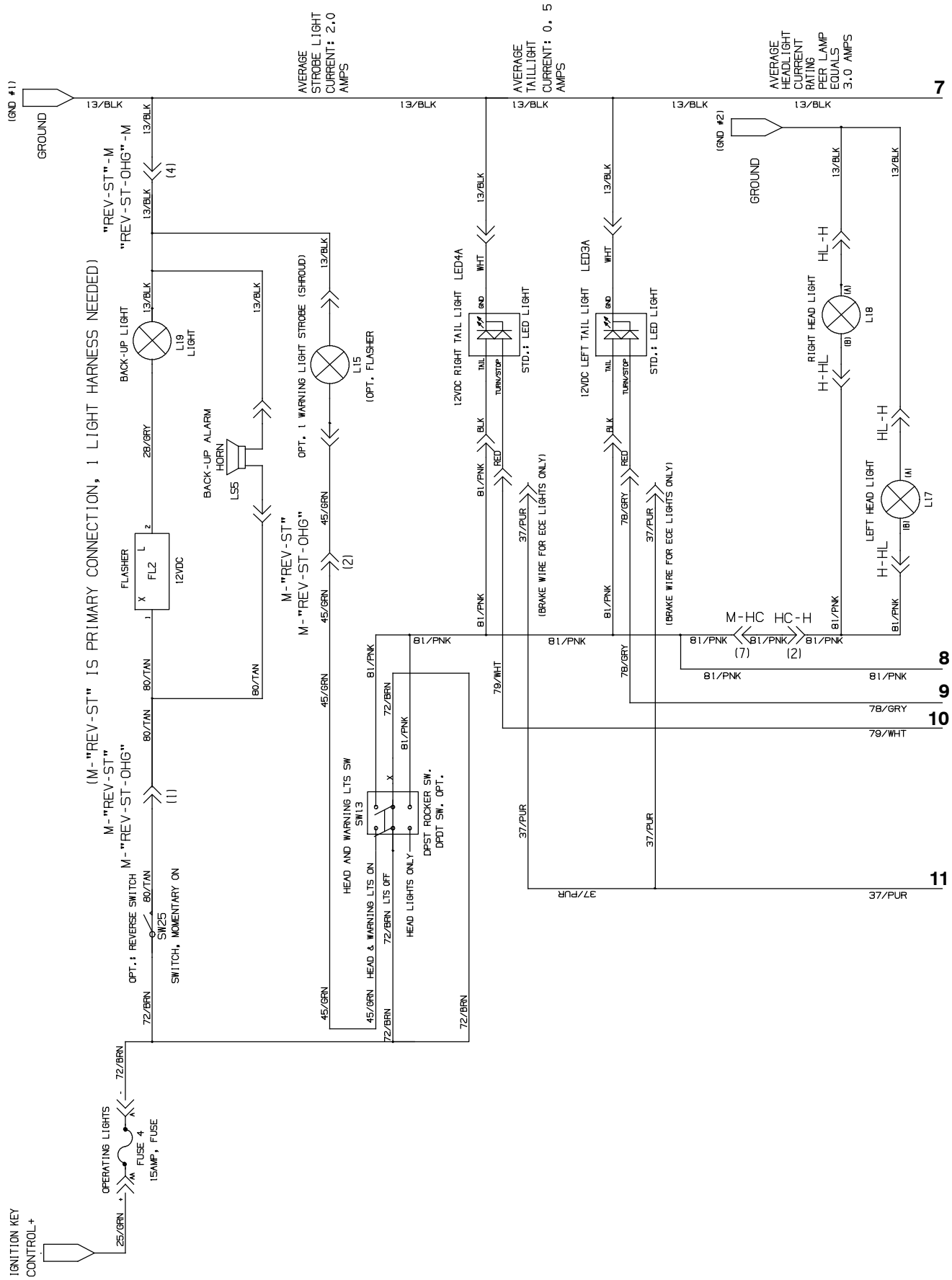

354986, 1048609 - D

Fig. 44 - Electrical Schematic

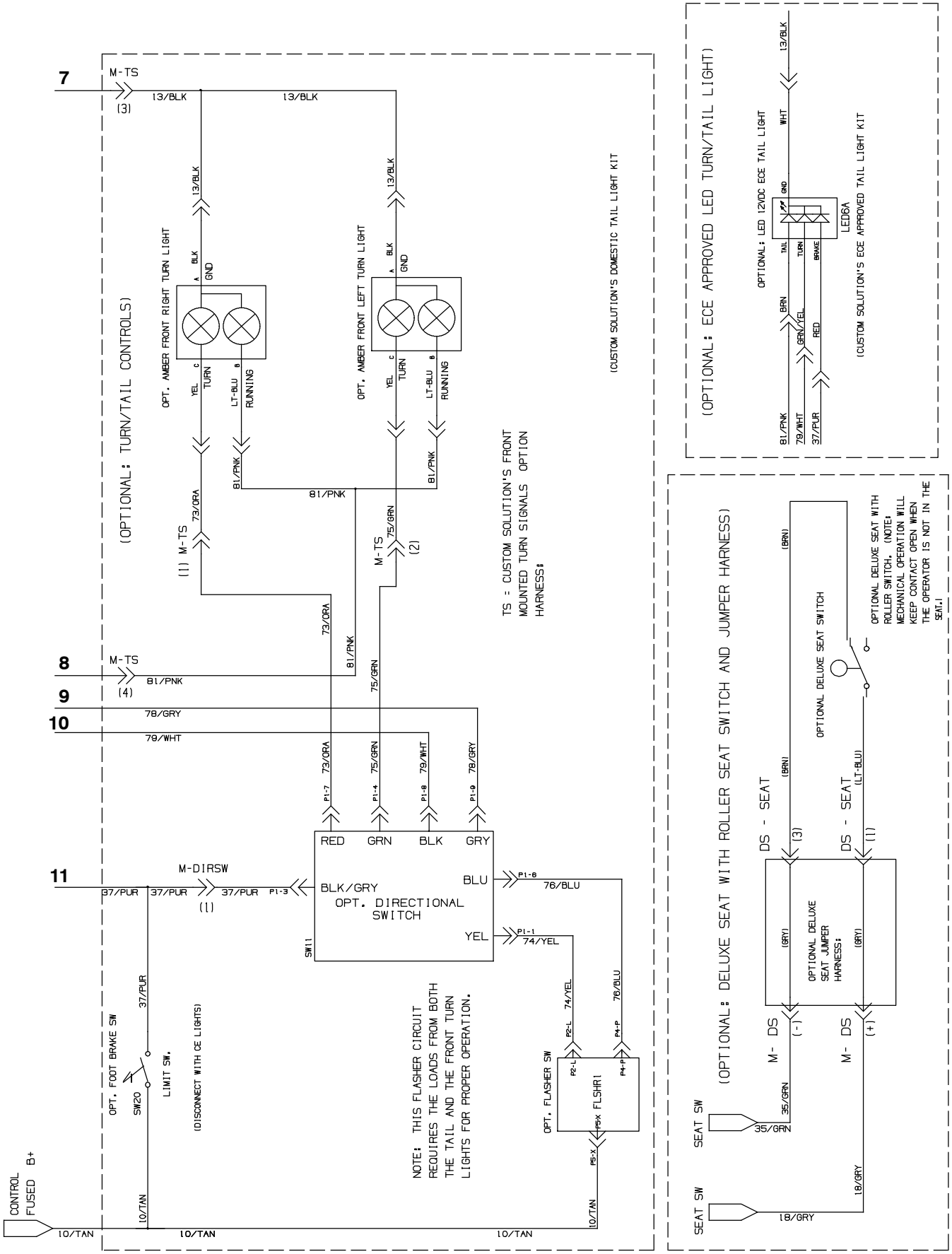

354986, 1048609 - D

Fig. 45 - Electrical Wire Harnesses Group

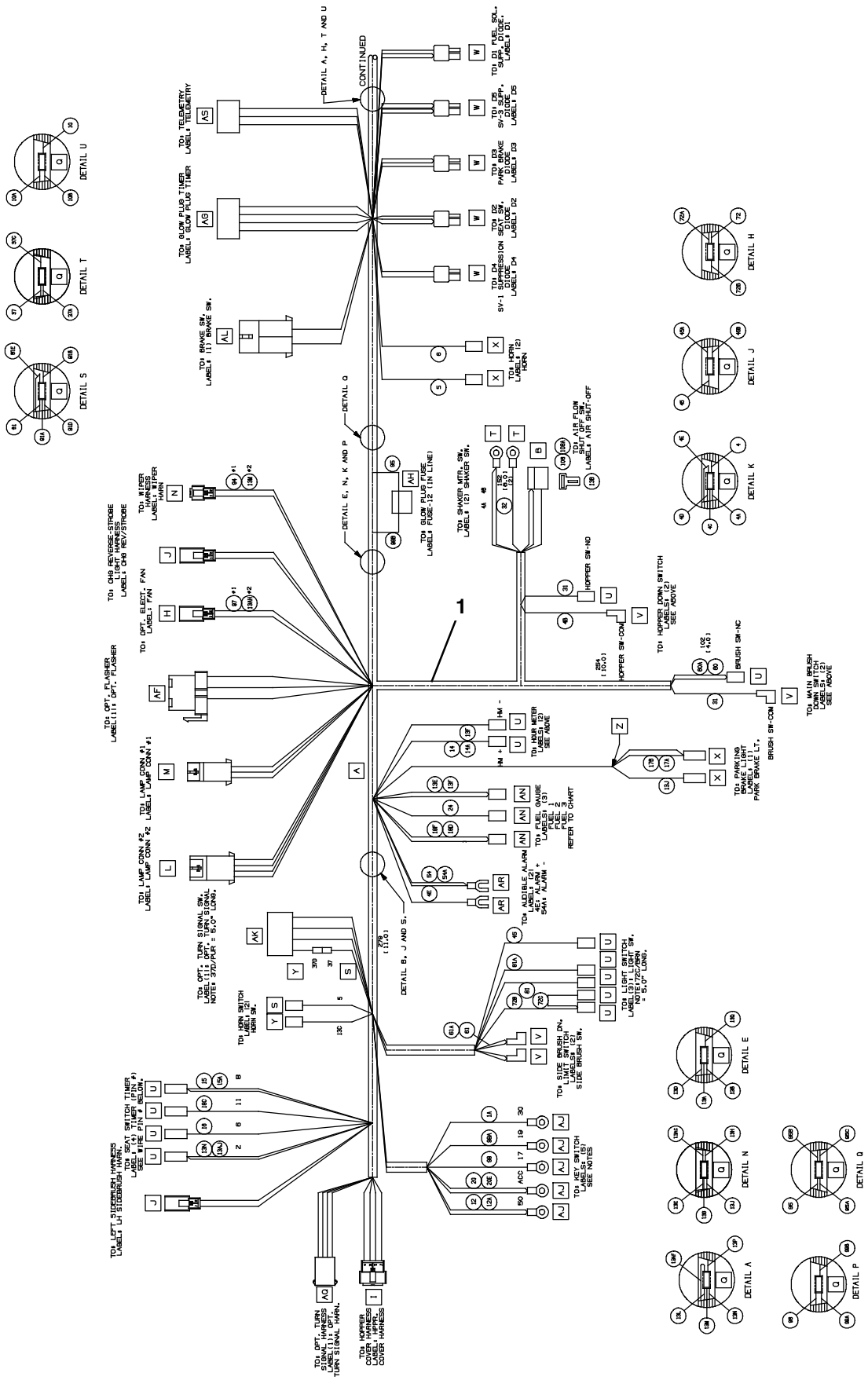

354982 - D

Fig. 45 - Electrical Wire Harnesses Group

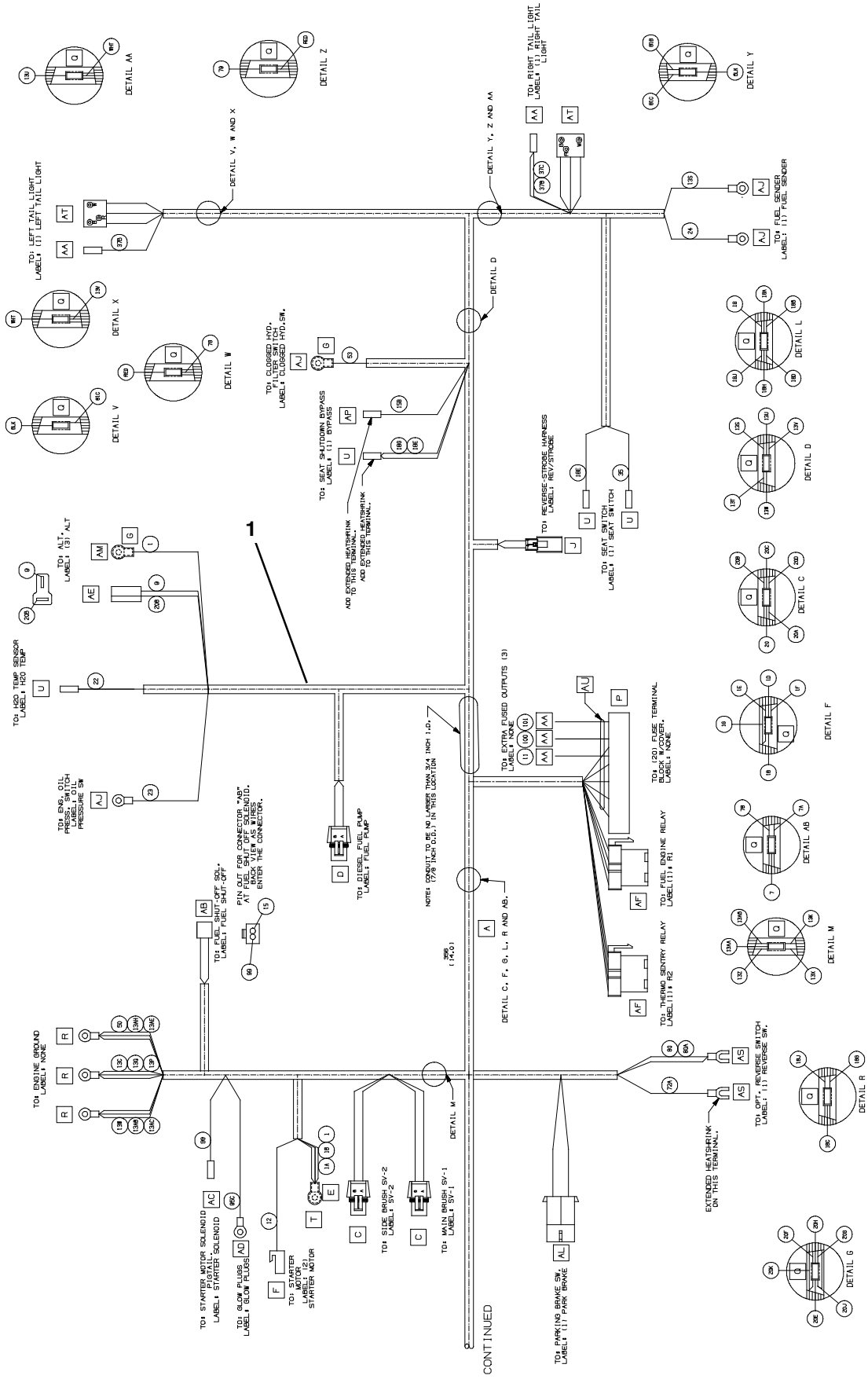

354982 - D

Fig. 45 - Electrical Wire Harnesses Group

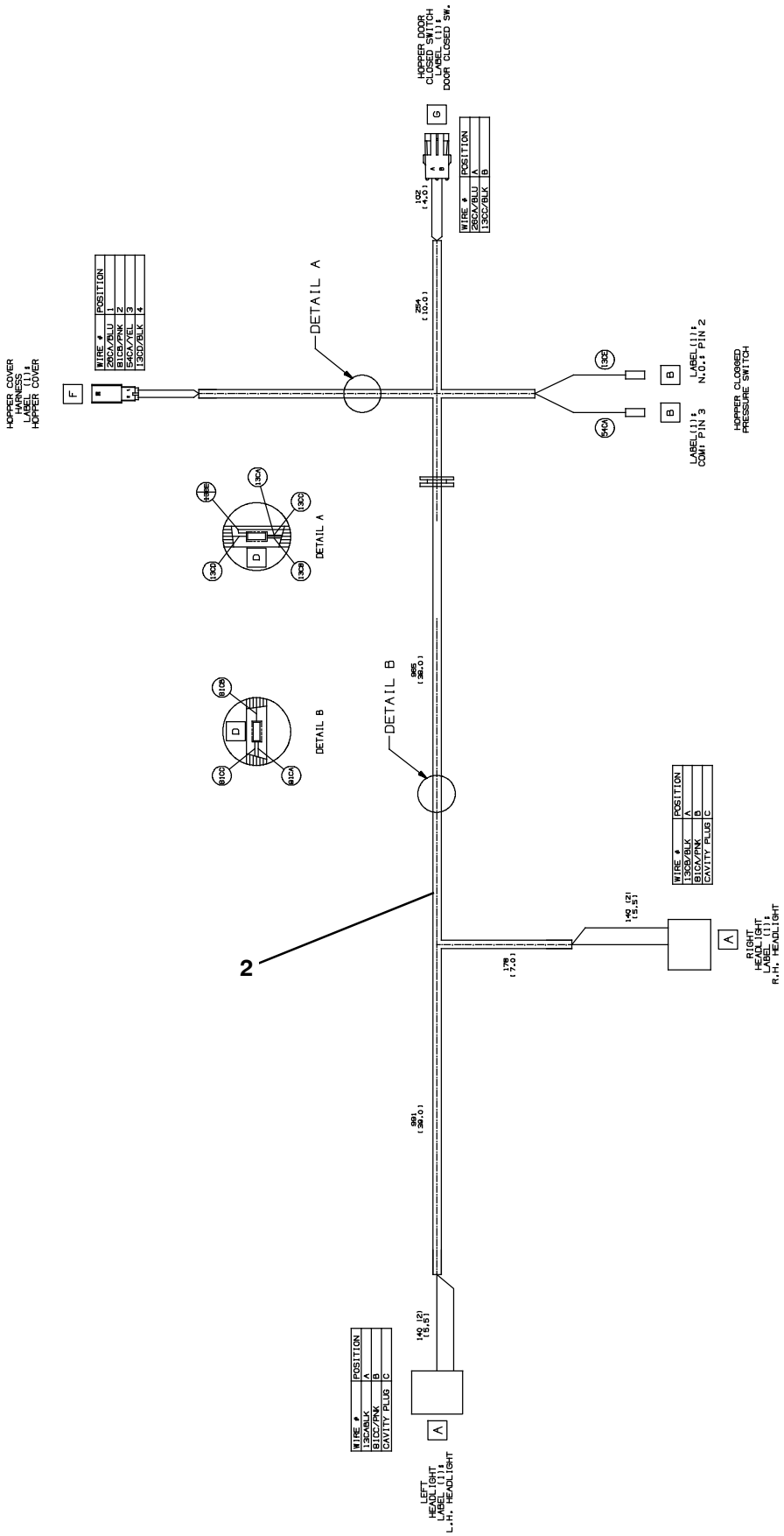

354982 - D

Fig. 45 - Electrical Wire Harnesses Group

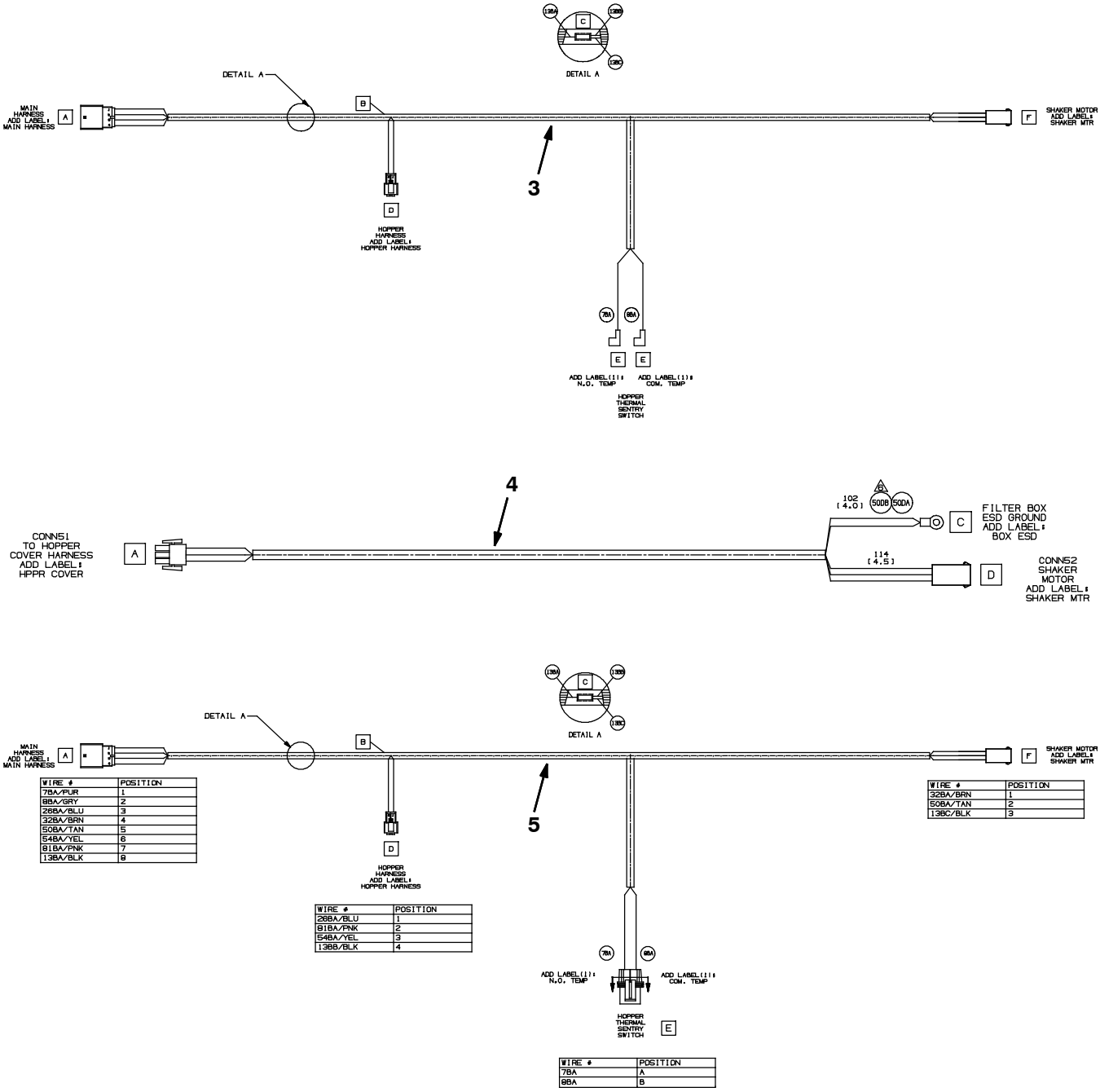

354982 - D, NA

	Ref.	Part No.	Serial Number	Description	Qty.
	1	9006700	(000000- 001070)	Harness Kit, Main, Dsl, Replmt [S20]	1
▽	1	1071358	(001071-)	Harness, Main, Dsl [S20]	1
▲		762516	(001071-)	Fuse, Blade, 030a, 32vdc	1
	2	1045768	(000000-)	Harness, Hppr, 12vdc [S20]	1
	3	1048504	(000000- 001361)	Harness, Hppr, Cover [S20]	1
	4	1047717	(000000-)	Harness, Shakr, Motor [S20]	1
	5	1061582	(001362-)	Harness, Hppr, Cover [S20]	1

Fig. 46 - Label Group

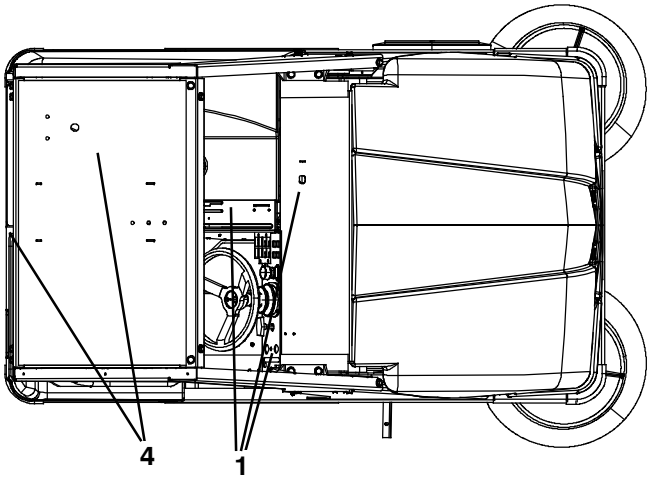

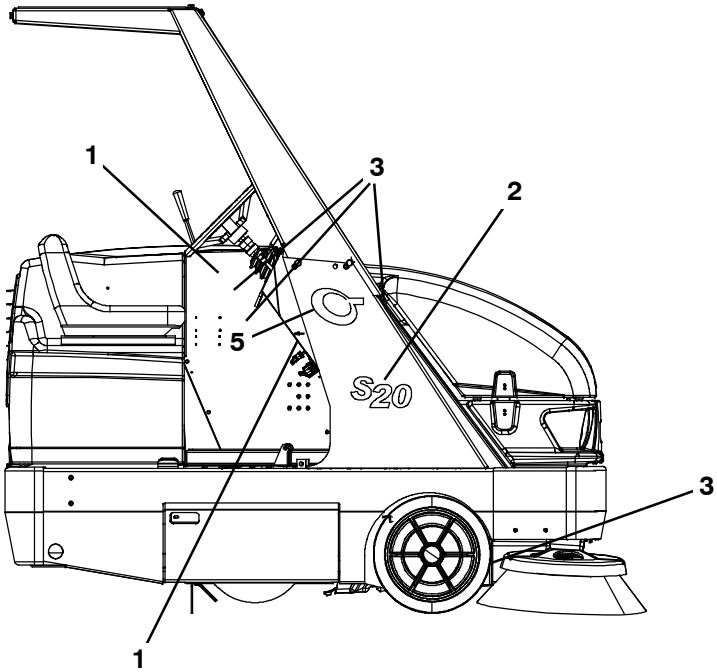

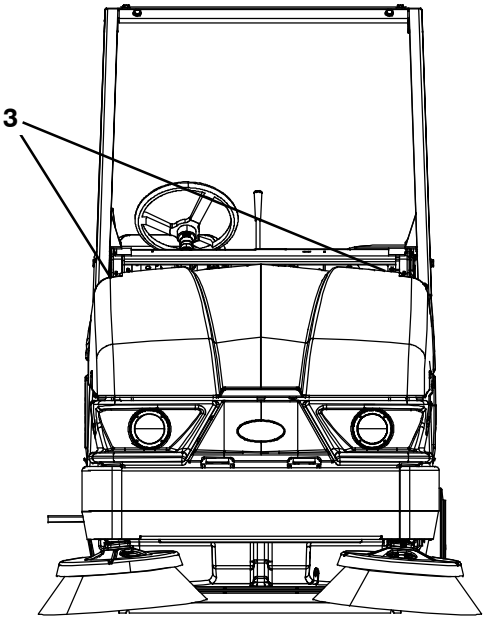

354978 - D, NA

Ref.	Part No.	Serial Number	Description	Qty.
1	1050723	(000000-)	Label Set, Opertnl [S20 Dsl]	1
2	1050170	(000000-)	Label, Model [S20]	1
3	1058333	(000000-)	Label Set, Info/Hzrd [S20]	1
4	1017141	(000000-)	Label Set, Hi- Temp	1
5	1057977	(000000-)	Label [Cyclone, Sweepmax S20]	2

SECTION 3

Contents **Page**

Fig. 1 - Backup Alarm and Flashing Light Kit, Rear 3- 2
Fig. 2 - Backup Alarm and Strobe Light Kit, Rear 3- 4
Fig. 3 - Backup Alarm and Flashing Light Kit, Overhead Guard 3- 6
Fig. 4 - Backup Alarm and Strobe Light Kit, Overhead Guard 3- 8
Fig. 5 - Overhead Guard Kit 3- 10
Fig. 6 - Cab Overhead Guard Group 3- 12
Fig. 7 - Cab Frame and Windows Group 3- 14
Fig. 8 - Cab Door Group 3- 16
Fig. 9 - Deluxe Suspension Seat Kit 3- 18
Fig. 10 - Seat Belt Kit 3- 20
Fig. 11 - Corner Bumper Kit 3- 21
Fig. 12 - Dual Side Brush Lift Group, LH 3- 22
Fig. 13 - Dual Side Brush Motor and Pivot Group, LH 3- 24
Fig. 14 - Dual Side Brush Wire Harness Group 3- 26
Fig. 15 - Dual Side Brush Hydraulic Valve Group3- 27
Fig. 16 - Dual Side Brush Hydraulic Hose Diagram 3- 28
Fig. 17 - Right Hand Side Brush Dust Control Kit (000000- 006329) 3- 30
Fig. 18 - Right Hand Side Brush Dust Control Kit (006330-) 3- 32
Fig. 19 - Dual Side Brush Dust Control Kit (000000- 006329) 3- 34
Fig. 20 - Dual Side Brush Dust Control Kit (006330-) 3- 36
Fig. 21 - Vacuum Wand Kit 3- 38
Fig. 22 - Fire Extinguisher Kit 3- 40
Fig. 23 - Soft Ride Non- Marking Tire and Wheel Assembly, Rear 3- 41
Fig. 24 - Soft Ride Puncture Proof Tire and Wheel Assembly, Rear 3- 42
Fig. 25 - Radial Tire and Wheel Assembly, Rear 3- 43
Fig. 26 - Soft Ride Non- Marking Tire and Wheel Kit, Front 3- 44
Fig. 27 - Soft Ride Puncture Proof Tire and Wheel Kit, Front 3- 45
Fig. 28 - Bias Tire and Wheel Kit, Front 3- 46
Fig. 29 - Radial Tire and Wheel Kit, Front 3- 47
Fig. 30 - Telemetry Group 3- 48
Fig. 31 - Wet Side Brush Dust Control Water Tank Group 3- 50
Fig. 32 - Wet Side Brush Dust Control Water Tank Retainer Group 3- 52
Fig. 33 - Wet Right Hand Side Brush Dust Control Spray Nozzle Group 3- 54
Fig. 34 - Wet Dual Side Brush Dust Control Spray Nozzle Group 3- 56

Contents **Page**

Fig. 35 - Wet Side Brush Dust Control Electrical Group 3- 58
Fig. 36 - Wet Side Brush Dust Control Wire Harness Group 3- 60
Fig. 37 - HEPA Filter Hopper Cover Group . . . 3- 62
Fig. 38 - HEPA Filter Box Group 3- 64
Fig. 39 - Spotlight Group, Blue 3- 66
Fig. 40 - Spotlight Wire Harnesses Group 3- 68
Fig. 41 - Weather Proof Pouch Group 3- 69
Fig. 42 - Tow Hook Kit (007663-) 3- 70
Fig. 43 - Documentation Group 3- 71

Fig. 1 - Backup Alarm and Flashing Light Kit, Rear

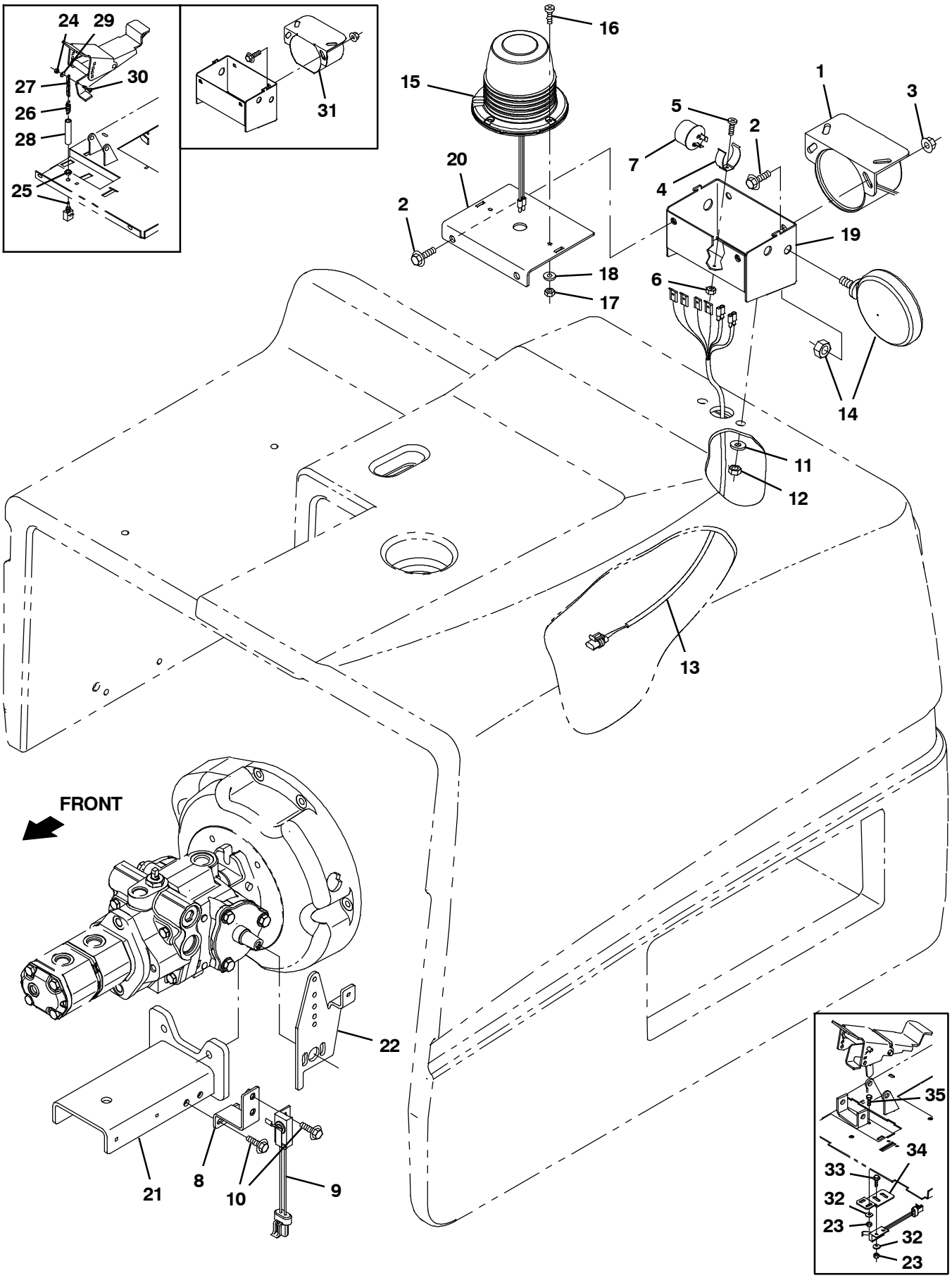

354975 - IC

Fig. 1 - Backup Alarm and Flashing Light Kit, Rear

	Ref.	Part No.	Serial Number	Description	Qty.
▽		9007871	(001319-)	Alarm Kit, Backup, Flsh, Rear, Ic, Ci	1
▲	1	9007131	(001490-)	Alarm Assy, Backup, 12/48vdc	1
▲	2	1037346	(000000-)	Screw, Hex, M8 X 1.25 X 25, 9.8, Sems	4
▲	3	07791	(000000-)	Nut, Hex, Flng, M8 X 1.25	2
▲	4	24576-1	(000000-)	Clip, Grip, Finger, 1.19-1.35d, Nk Pl	1
▲	5	06927	(000000-)	Screw, Pan, Phl, M4 X 0.70 X 16, 4.8	1
▲	6	02850	(000000-)	Nut, Hex, Lock, M4 X 0.70, Nl	1
▲	7	24576	(000000-)	Flasher, 12vdc [Hd552ps83]	1
▲	8	1067978	(001883-)	Bracket, Switch, Reverse	1
▲	9	1039735	(001319-)	Switch, Snap, 15a No	1
▲	10	1036892	(001883-)	Screw, Hex, M6 X 1.00 X 25, 9.8, Sems	4
▲	11	32491	(000000-)	Washer, Flat, 0.31, Std	2
▲	12	08709	(000000-)	Nut, Hex, Lock, M8 X 1.25, Nl	2
▲	13	1051788	(000000-)	Harness, Alarm / Strobe [S20]	1
▲	14	36438	(000000-)	Light, Spot, 12vdc, 21cp, Rwk 44025a	1
▲	15	1254294	(000000-)	Light, Strobe, Amb, Led	1
▲	16	06933	(000000-)	Screw, Pan, Phl, M5 X 0.80 X 16, 4.8	2
▲	17	06549	(000000-)	Nut, Hex, Lock, M5 X 0.80, Nl	2
▲	18	19066	(000000-)	Washer, Flat, 10	2
▲	19	1049554	(000000-)	Angle, Mtg, Alarm	1
▲	20	1049553	(000000-)	Plate, Mtg, Light	1
▲	21	1045645	(001883-)	Bracket Wldt, Mtg, Eng, Rear	1
▲	22	1046635	(001883-)	Bracket, Mtg, Cable, Propel	1
	23	08708	(001319-001882)	Nut, Hex, Lock, M6 X 1.00, Nl	4
	24	02850	(000000-001318)	Nut, Hex, Lock, M4 X 0.70, Nl	1
	25	43673	(000000-001318)	Switch, Pull, No	1
	26	43672	(000000-001318)	Spring, Extn, 0.38od 0.05wir 01.0l	1
	27	28499-1	(000000-001318)	Chain, Sash, 35, 02.4l 04 Link	1
	28	366025	(000000-001318)	Sleeve, Vyl, Flex, .39id 03.0l	1
	29	06927	(000000-001318)	Screw, Pan, Phl, M4 X 0.70 X 16, 4.8	1
	30	19066	(000000-001318)	Washer, Flat, 10	1
	31	72171	(000000-001489)	Alarm Assy, Backup, 12-48vdc 82-102dba	1
	32	32483	(001319-001882)	Washer, Flat, 0.25, Sae	4
	33	1040467	(001319-001882)	Screw, Hex, M6 X 1.00 X 20, 9.8, Sems	2
	34	1061277	(001319-001882)	Bracket, Switch, Reverse	1
	35	06943	(001319-001882)	Screw, Hex, M6 X 1.00 X 20, 8.8	2

Fig. 2 - Backup Alarm and Strobe Light Kit, Rear

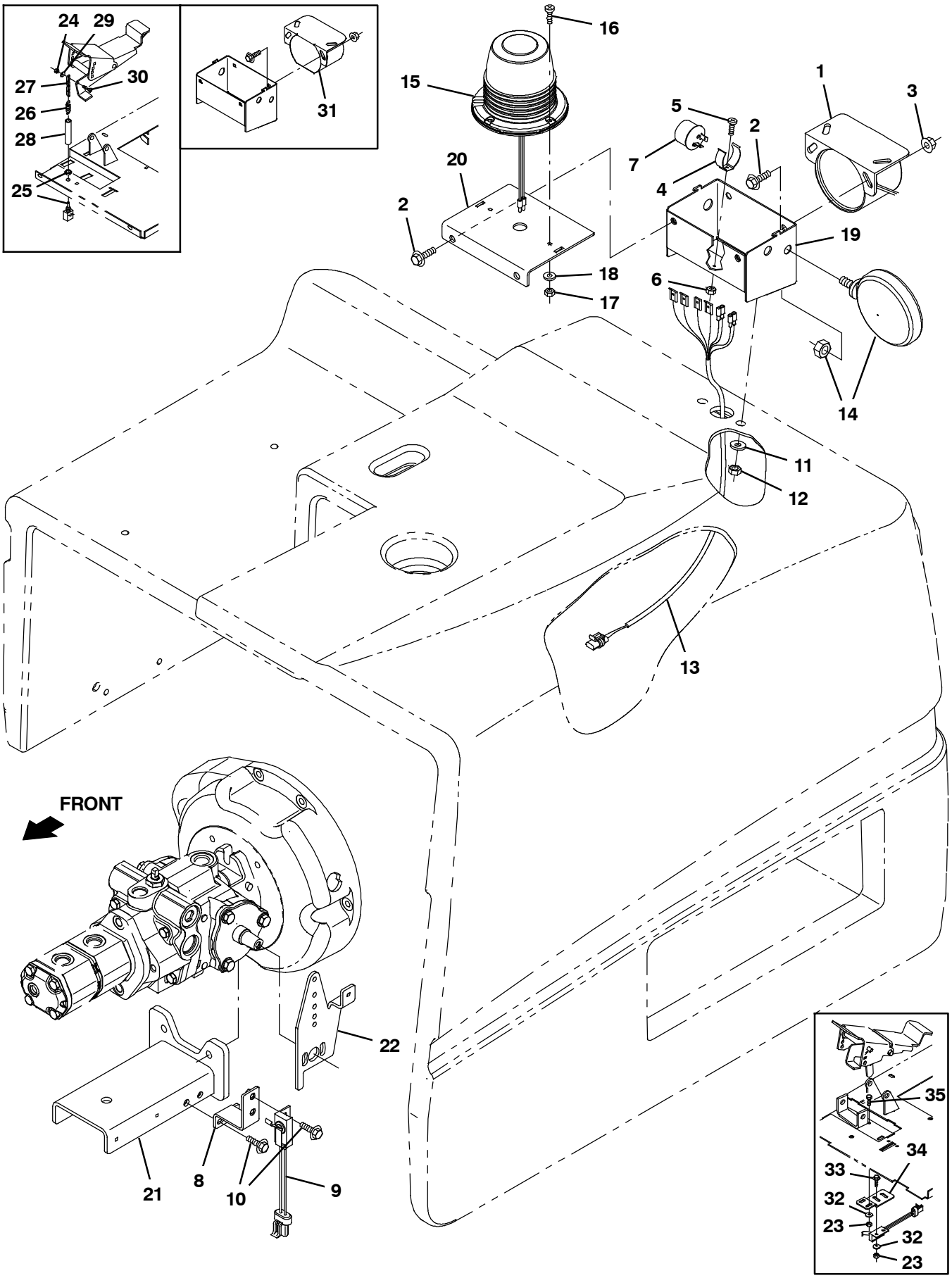

354975 - IC

Fig. 2 - Backup Alarm and Strobe Light Kit, Rear

	Ref.	Part No.	Serial Number	Description	Qty.
▽		9007869	(001319-)	Alarm Kit, Backup, Strb, Rear, Ic, Ci	1
▲	1	9007131	(001490-)	Alarm Assy, Backup, 12/48vdc	1
▲	2	1037346	(000000-)	Screw, Hex, M8 X 1.25 X 25, 9.8, Sems	4
▲	3	07791	(000000-)	Nut, Hex, Flng, M8 X 1.25	2
▲	4	24576-1	(000000-)	Clip, Grip, Finger, 1.19-1.35d, Nk Pl	1
▲	5	06927	(000000-)	Screw, Pan, Phl, M4 X 0.70 X 16, 4.8	1
▲	6	02850	(000000-)	Nut, Hex, Lock, M4 X 0.70, Nl	1
▲	7	24576	(000000-)	Flasher, 12vdc [Hd552ps83]	1
▲	8	1067978	(001883-)	Bracket, Switch, Reverse	1
▲	9	1039735	(001319-)	Switch, Snap, 15a No	1
▲	10	1036892	(001883-)	Screw, Hex, M6 X 1.00 X 25, 9.8, Sems	4
▲	11	32491	(000000-)	Washer, Flat, 0.31, Std	2
▲	12	08709	(000000-)	Nut, Hex, Lock, M8 X 1.25, Nl	2
▲	13	1051788	(000000-)	Harness, Alarm / Strobe [S20]	1
▲	14	36438	(000000-)	Light, Spot, 12vdc, 21cp, Rwk 44025a	1
▲	15	1254294	(000000-)	Light, Strobe, Amb, Led	1
▲	16	06933	(000000-)	Screw, Pan, Phl, M5 X 0.80 X 16, 4.8	2
▲	17	06549	(000000-)	Nut, Hex, Lock, M5 X 0.80, Nl	2
▲	18	19066	(000000-)	Washer, Flat, 10	2
▲	19	1049554	(000000-)	Angle, Mtg, Alarm	1
▲	20	1049553	(000000-)	Plate, Mtg, Light	1
▲	21	1045645	(001883-)	Bracket Wldt, Mtg, Eng, Rear	1
▲	22	1046635	(001883-)	Bracket, Mtg, Cable, Propel	1
	23	08708	(001319-001882)	Nut, Hex, Lock, M6 X 1.00, Nl	4
	24	02850	(000000-001318)	Nut, Hex, Lock, M4 X 0.70, Nl	1
	25	43673	(000000-001318)	Switch, Pull, No	1
	26	43672	(000000-001318)	Spring, Extn, 0.38od 0.05wir 01.0l	1
	27	28499-1	(000000-001318)	Chain, Sash, 35, 02.4l 04 Link	1
	28	366025	(000000-001318)	Sleeve, Vyl, Flex, .39id 03.0l	1
	29	06927	(000000-001318)	Screw, Pan, Phl, M4 X 0.70 X 16, 4.8	1
	30	19066	(000000-001318)	Washer, Flat, 10	1
	31	72171	(000000-001489)	Alarm Assy, Backup, 12-48vdc 82-102dba	1
	32	32483	(001319-001882)	Washer, Flat, 0.25, Sae	4
	33	1040467	(001319-001882)	Screw, Hex, M6 X 1.00 X 20, 9.8, Sems	2
	34	1061277	(001319-001882)	Bracket, Switch, Reverse	1
	35	06943	(001319-001882)	Screw, Hex, M6 X 1.00 X 20, 8.8	2

Fig. 3 - Backup Alarm and Flashing Light Kit, Overhead Guard

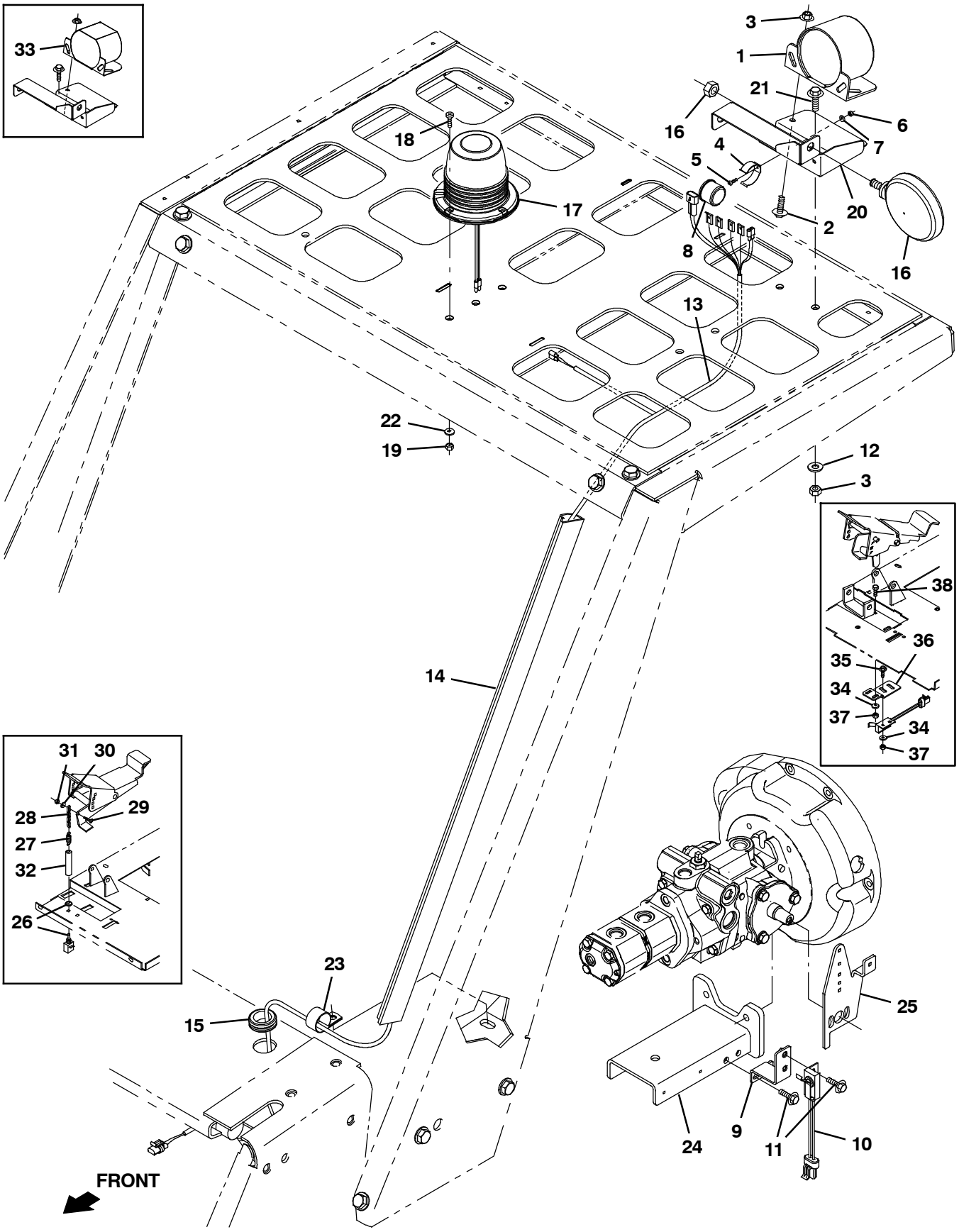

354976 - IC

Fig. 3 - Backup Alarm and Flashing Light Kit, Overhead Guard

	Ref.	Part No.	Serial Number	Description	Qty.
▽		9007868	(001319-)	Alarm Kit, Backup, Flsh, Ohg, Ic, Ci	1
▲	1	9007131	(001490-)	Alarm Assy, Backup, 12/48vdc	1
▲	2	1037346	(000000-)	Screw, Hex, M8 X 1.25 X 25, 9.8, Sems	2
▲	3	08709	(000000-)	Nut, Hex, Lock, M8 X 1.25, Nl	4
▲	4	24576-1	(000000-)	Clip, Grip, Finger, 1.19-1.35d, Nk Pl	1
▲	5	06920	(000000-)	Screw, Pan, Phl, M3 X 0.50 X 10, 4.8	1
▲	6	01754	(000000-)	Nut, Hex, Std, M3 X 0.50, 8	1
▲	7	39658	(000000-)	Washer, Lock, Int, 04	1
▲	8	24576	(000000-)	Flasher, 12vdc [Hd552ps83]	1
▲	9	1067978	(001883-)	Bracket, Switch, Reverse	1
▲	10	1039735	(001319-)	Switch, Snap, 15a No	1
▲	11	1036892	(001883-)	Screw, Hex, M6 X 1.00 X 25, 9.8, Sems	4
▲	12	32491	(000000-)	Washer, Flat, 0.31, Std	2
▲	13	1051779	(000000-)	Harness, Alarm / Strobe, Ohg [S20]	1
▲	14	55034	(000000-)	Duct, Vyl, 0.74 X 1.50 .75d Max 48.0l	1
▲	15	10632-1	(001281-)	Grommet, Rbr, 1.06id, F/1.4h, .19 Matl	1
▲	16	36438	(000000-)	Light, Spot, 12vdc, 21cp, Rwk 44025a	1
▲	17	1254294	(000000-)	Light, Strobe, Amb, Led	1
▲	18	06933	(000000-)	Screw, Pan, Phl, M5 X 0.80 X 16, 4.8	2
▲	19	06549	(000000-)	Nut, Hex, Lock, M5 X 0.80, Nl	2
▲	20	1050046	(000000-)	Bracket, Mtg, Horn	1
▲	21	1020341	(000000-)	Screw, Hex, M8 X 1.25 X 20, Ss, Sems	2
▲	22	32483	(000000-)	Washer, Flat, 0.25, Sae	2
▲	23	58366	(001281-)	Clamp, Cable, Stl, 1.25d X 1.00w, 1hole	1
▲	24	1045645	(001883-)	Bracket Wldt, Mtg, Eng, Rear	1
▲	25	1046635	(001883-)	Bracket, Mtg, Cable, Propel	1
	26	43673	(000000-001318)	Switch, Pull, No	1
	27	43672	(000000-001318)	Spring, Extn, 0.38od 0.05wir 01.0l	1
	28	28499-1	(000000-001318)	Chain, Sash, 35, 02.4l 04 Link	1
	29	06927	(000000-001318)	Screw, Pan, Phl, M4 X 0.70 X 16, 4.8	1
	30	19066	(000000-001318)	Washer, Flat, 10	3
	31	02850	(000000-001318)	Nut, Hex, Lock, M4 X 0.70, Nl	1
	32	366025	(000000-001318)	Sleeve, Vyl, Flex, .39id 03.0l	1
	33	72171	(000000-001489)	Alarm Assy, Backup, 12-48vdc 82-102dba	1
	34	32483	(001319-001882)	Washer, Flat, 0.25, Sae	4
	35	1040467	(001319-001882)	Screw, Hex, M6 X 1.00 X 20, 9.8, Sems	2
	36	1061277	(001319-001882)	Bracket, Switch, Reverse	1
	37	08708	(001319-001882)	Nut, Hex, Lock, M6 X 1.00, Nl	4
	38	06943	(001319-001882)	Screw, Hex, M6 X 1.00 X 20, 8.8	2

Fig. 4 - Backup Alarm and Strobe Light Kit, Overhead Guard

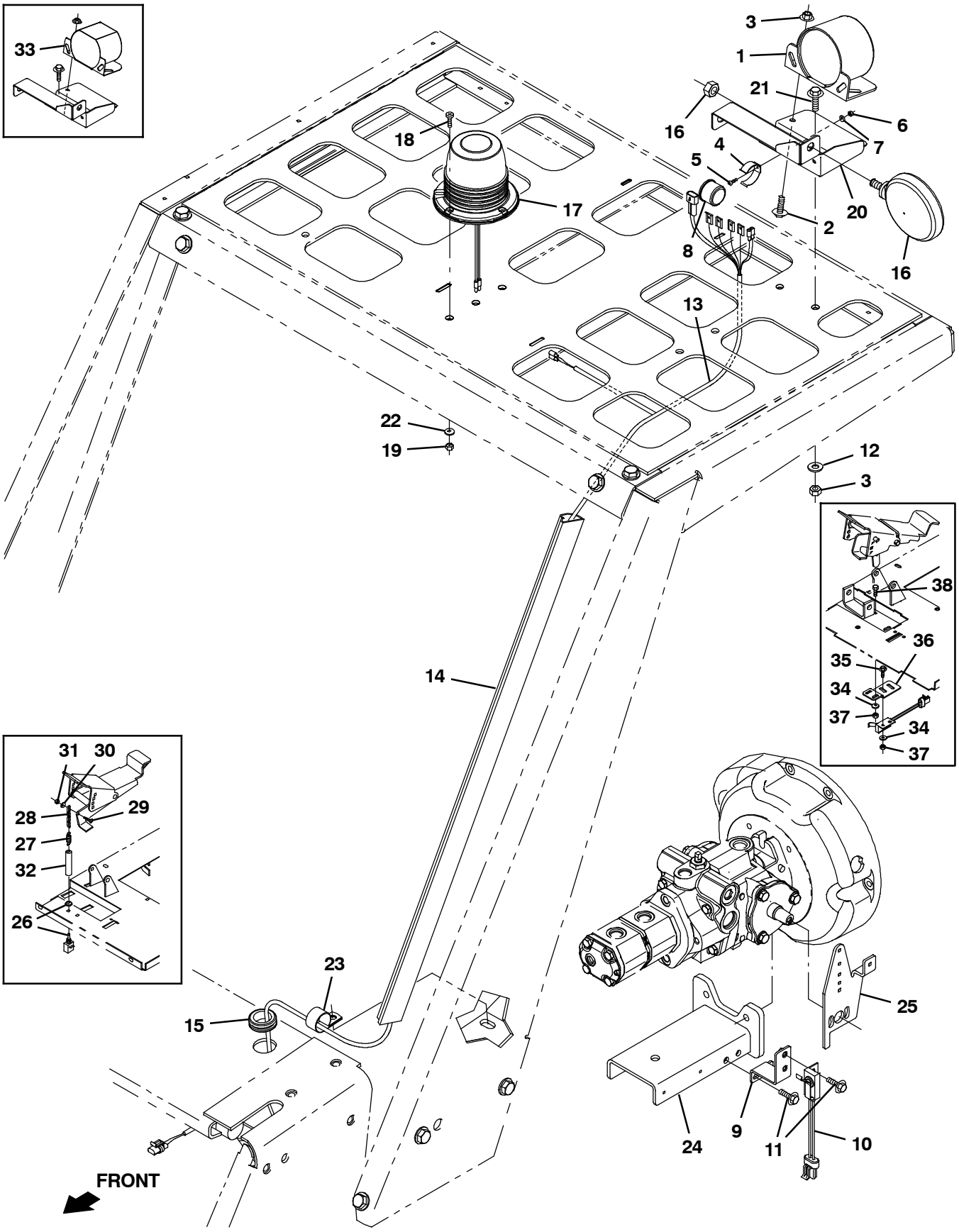

354976 - IC

Fig. 4 - Backup Alarm and Strobe Light Kit, Overhead Guard

	Ref.	Part No.	Serial Number	Description	Qty.
▽		9007870	(001319-)	Alarm Kit, Backup, Strb, Ohg, Ic, Ci	1
▲	1	9007131	(001490-)	Alarm Assy, Backup, 12/48vdc	1
▲	2	1037346	(000000-)	Screw, Hex, M8 X 1.25 X 25, 9.8, Sems	2
▲	3	08709	(000000-)	Nut, Hex, Lock, M8 X 1.25, Nl	4
▲	4	24576-1	(000000-)	Clip, Grip, Finger, 1.19-1.35d, Nk Pl	1
▲	5	06920	(000000-)	Screw, Pan, Phl, M3 X 0.50 X 10, 4.8	1
▲	6	01754	(000000-)	Nut, Hex, Std, M3 X 0.50, 8	1
▲	7	39658	(000000-)	Washer, Lock, Int, 04	1
▲	8	24576	(000000-)	Flasher, 12vdc [Hd552ps83]	1
▲	9	1067978	(001883-)	Bracket, Switch, Reverse	1
▲	10	1039735	(001319-)	Switch, Snap, 15a No	1
▲	11	1036892	(001883-)	Screw, Hex, M6 X 1.00 X 25, 9.8, Sems	4
▲	12	32491	(000000-)	Washer, Flat, 0.31, Std	2
▲	13	1051779	(000000-)	Harness, Alarm / Strobe, Ohg [S20]	1
▲	14	55034	(000000-)	Duct, Vyl, 0.74 X 1.50 .75d Max 48.0l	1
▲	15	10632-1	(001281-)	Grommet, Rbr, 1.06id, F/1.4h, .19 Matl	1
▲	16	36438	(000000-)	Light, Spot, 12vdc, 21cp, Rwk 44025a	1
▲	17	1254294	(000000-)	Light, Strobe, Amb, Led	1
▲	18	06933	(000000-)	Screw, Pan, Phl, M5 X 0.80 X 16, 4.8	2
▲	19	06549	(000000-)	Nut, Hex, Lock, M5 X 0.80, Nl	2
▲	20	1050046	(000000-)	Bracket, Mtg, Horn	1
▲	21	1020341	(000000-)	Screw, Hex, M8 X 1.25 X 20, Ss, Sems	2
▲	22	32483	(000000-)	Washer, Flat, 0.25, Sae	2
▲	23	58366	(001281-)	Clamp, Cable, Stl, 1.25d X 1.00w, 1hole	1
▲	24	1045645	(001883-)	Bracket Wldt, Mtg, Eng, Rear	1
▲	25	1046635	(001883-)	Bracket, Mtg, Cable, Propel	1
	26	43673	(000000-001318)	Switch, Pull, No	1
	27	43672	(000000-001318)	Spring, Extn, 0.38od 0.05wir 01.0l	1
	28	28499-1	(000000-001318)	Chain, Sash, 35, 02.4l 04 Link	1
	29	06927	(000000-001318)	Screw, Pan, Phl, M4 X 0.70 X 16, 4.8	1
	30	19066	(000000-001318)	Washer, Flat, 10	3
	31	02850	(000000-001318)	Nut, Hex, Lock, M4 X 0.70, Nl	1
	32	366025	(000000-001318)	Sleeve, Vyl, Flex, .39id 03.0l	1
	33	72171	(000000-001489)	Alarm Assy, Backup, 12-48vdc 82-102dba	1
	34	32483	(001319-001882)	Washer, Flat, 0.25, Sae	4
	35	1040467	(001319-001882)	Screw, Hex, M6 X 1.00 X 20, 9.8, Sems	2
	36	1061277	(001319-001882)	Bracket, Switch, Reverse	1
	37	08708	(001319-001882)	Nut, Hex, Lock, M6 X 1.00, Nl	4
	38	06943	(001319-001882)	Screw, Hex, M6 X 1.00 X 20, 8.8	2

Fig. 5 - Overhead Guard Kit

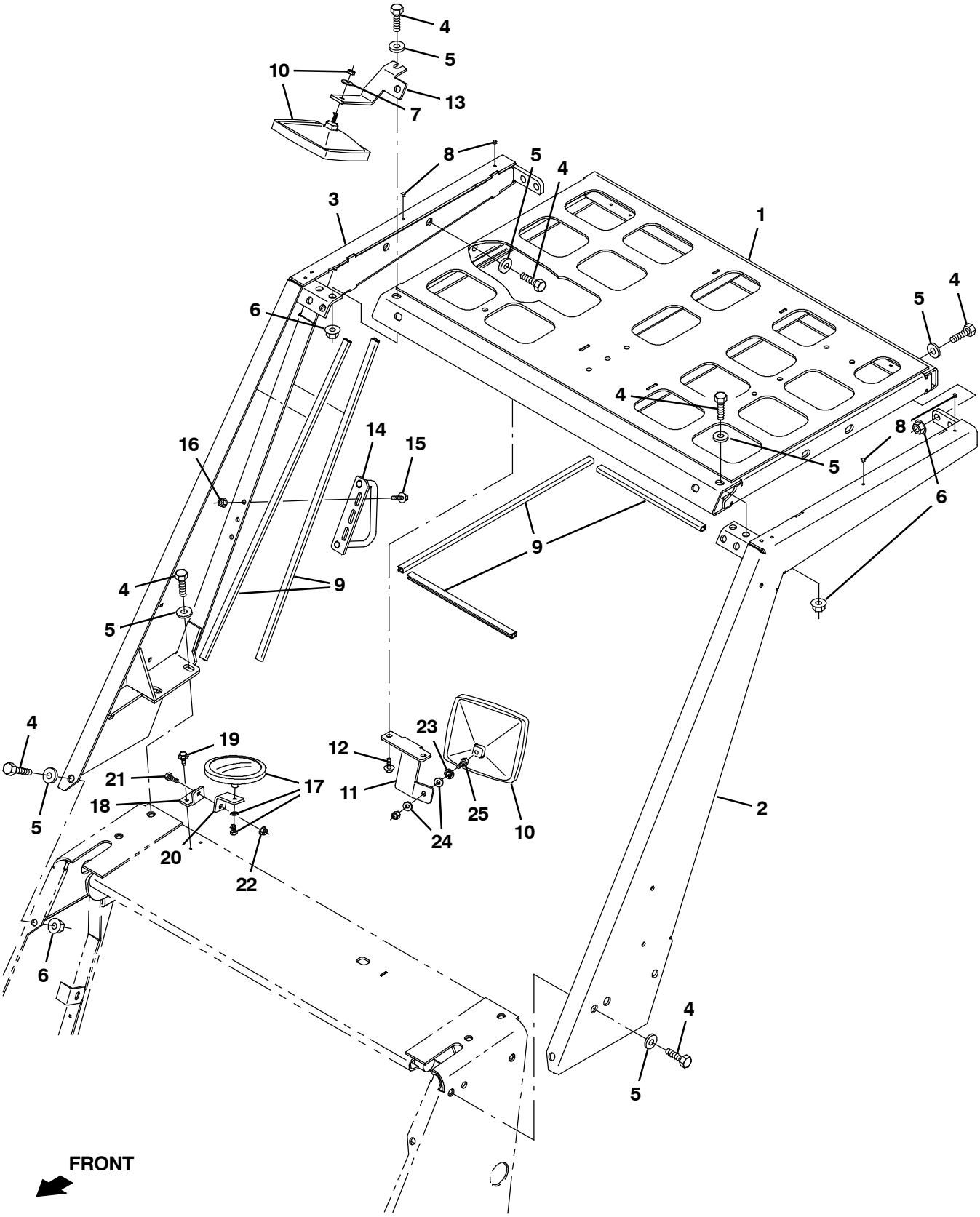

356023 - ALL

Fig. 5 - Overhead Guard Kit

	Ref.	Part No.	Serial Number	Description	Qty.
▽		9006015	(000000-)	Ohg Kit, Ci [S20]	1
▲	1	1057585	(000000-)	Panel Wldt, Top, Ohg	1
▲	2	1047704	(000000-)	Channel Wldt, Ohg, Lh	1
▲	3	1047705	(000000-)	Channel Wldt, Ohg, Rh	1
▲	4	41346	(000000-)	Screw, Hex, M12 X 1.75 X 30, 8.8	22
▲	5	32486	(000000-)	Washer Flat,0.50,Sae	22
▲	6	07793	(000000-)	Nut, Hex, Flng, M12 X 1.75	10
▲	7	32491	(000000-)	Washer, Flat, 0.31, Std	2
▲	8	379000	(000000-)	Plug, Hole, Rnd, 0.22H .00- .06, Blk Nyl	4
▲	9	1046406	(000000-)	Molding, Afmkt, Trim, Pvc, .18 .31, 08Ft	1
▲	10	49034	(000000-)	Mirror, Convex, 06.7 X 06.2	2
▲	11	1047480	(000000-)	Bracket, Mtg, Mirror	1
▲	12	763045	(000000-)	Screw, Hex, M8 X 1.25 X 20, Fmg	2
▲	13	1049992	(000000-)	Bracket, Mtg, Mirror, Top	1
▲	14	1055757	(000000-)	Handle Wldt, Door	1
▲	15	1037354	(000000-)	Screw, Hex, M8 X 1.25 X 30, 9.8, Sems	3
▲	16	07791	(000000-)	Nut, Hex, Flng, M8 X 1.25	3
▲	17	1053233	(000000-)	Mirror, Flat, 05.0d	1
▲	18	1049990	(000000-)	Bracket, Mtg, Mirror, Brush	1
▲	19	361339	(000000-)	Screw, Hex, M6 X 1.00 X 16, Fmg	2
▲	20	1049991	(000000-)	Bracket, Mtg, Mirror, Brush	1
▲	21	06943	(000000-)	Screw, Hex, M6 X 1.00 X 20, 8.8	1
▲	22	08708	(000000-)	Nut, Hex, Lock, M6 X 1.00, Nl	1
▲	23	32984	(000000-)	Washer, Lock, Int, 0.31	1
▲	24	19066	(000000-)	Washer, Flat, 0.25b 0.56d .05, Pl, 10	2
▲	25	54396	(000000-)	Screw, Hex, .31- 18 X 0.75, G5	1

Fig. 6 - Cab Overhead Guard Group

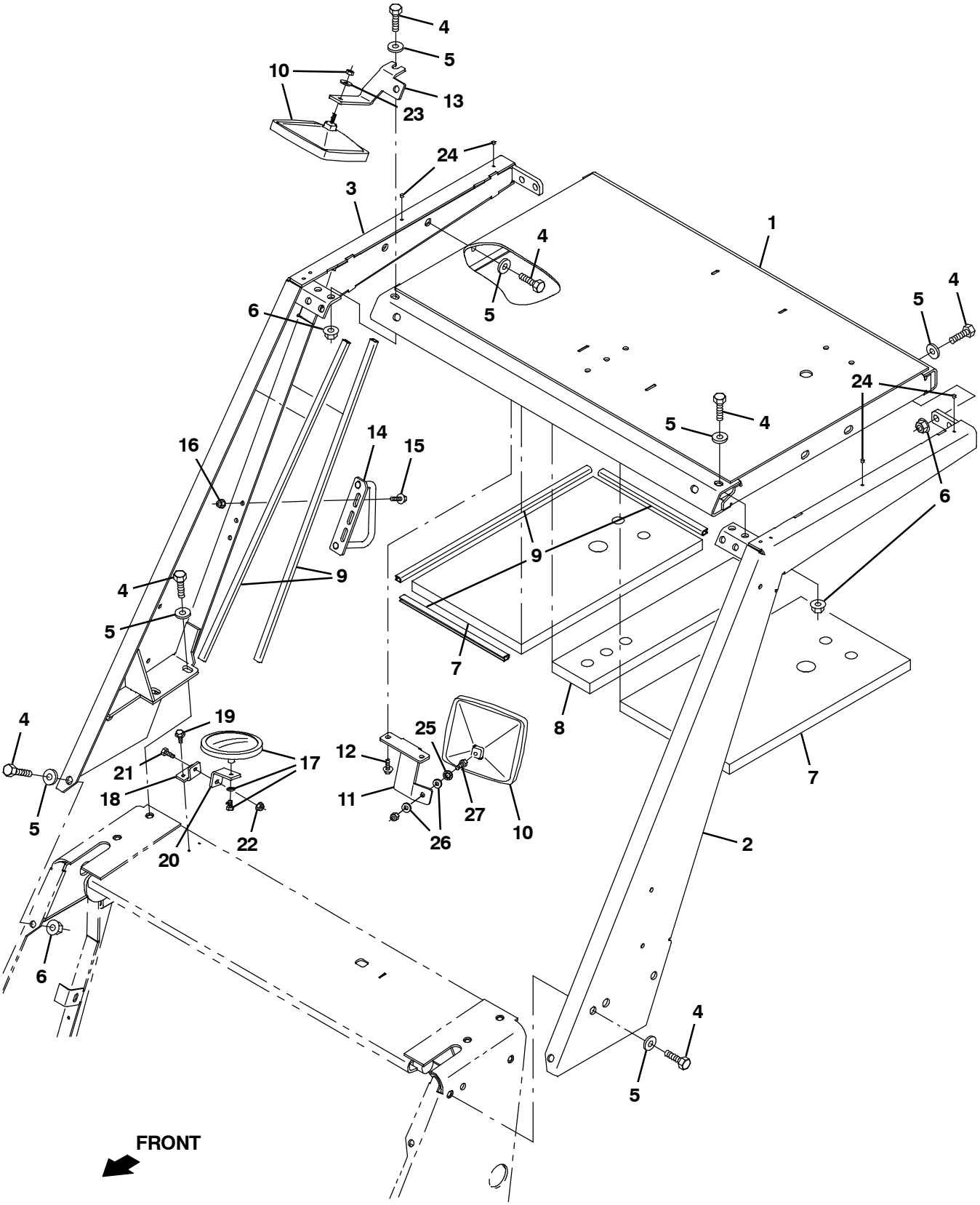

354974 - ALL

Fig. 6 - Cab Overhead Guard Group

NOTE: Cab Kit (including OHG), Tennant Part Number 9006304, includes; Fig. 6, Fig. 7 and Fig. 8.

Ref.	Part No.	Serial Number	Description	Qty.
1	1044075	(000000-)	Panel Wldt, Top, Ohg	1
2	1047704	(000000-)	Channel Wldt, Ohg, Lh	1
3	1047705	(000000-)	Channel Wldt, Ohg, Rh	1
4	41346	(000000-)	Screw, Hex, M12 X 1.75 X 30, 8.8	22
5	32486	(000000-)	Washer Flat,0.50,Sae	22
6	07793	(000000-)	Nut, Hex, Flng, M12 X 1.75	10
7	1049937	(000000-)	Insulation, Acstc	2
8	1049938	(000000-)	Insulation, Acstc	1
9	1046406	(000000-)	Molding, Afmkt, Trim, Pvc, .18 .31, 08Ft	1
10	49034	(000000-)	Mirror, Convex, 06.7 X 06.2	2
11	1047480	(000000-)	Bracket, Mtg, Mirror	1
12	763045	(000000-)	Screw, Hex, M8 X 1.25 X 20, Fmg	2
13	1049992	(000000-)	Bracket, Mtg, Mirror, Top	1
14	1055757	(000000-)	Handle Wldt, Door	1
15	1037354	(000000-)	Screw, Hex, M8 X 1.25 X 30, 9.8, Sems	3
16	07791	(000000-)	Nut, Hex, Flng, M8 X 1.25	3
17	1053233	(000000-)	Mirror, Flat, 05.0d	1
18	1049990	(000000-)	Bracket, Mtg, Mirror, Brush	1
19	361339	(000000-)	Screw, Hex, M6 X 1.00 X 16, Fmg	2
20	1049991	(000000-)	Bracket, Mtg, Mirror, Brush	1
21	06943	(000000-)	Screw, Hex, M6 X 1.00 X 20, 8.8	1
22	08708	(000000-)	Nut, Hex, Lock, M6 X 1.00, Nl	1
23	32491	(000000-)	Washer, Flat, 0.31, Std	2
24	379000	(000000-)	Plug, Hole, Rnd, 0.22H .00- .06, Blk Nyl	4
25	32984	(000000-)	Washer, Lock, Int, 0.31	1
26	19066	(000000-)	Washer, Flat, 0.25b 0.56d .05, Pl, 10	2
27	54396	(000000-)	Screw, Hex, .31- 18 X 0.75, G5	1

Fig. 7 - Cab Frame and Windows Group

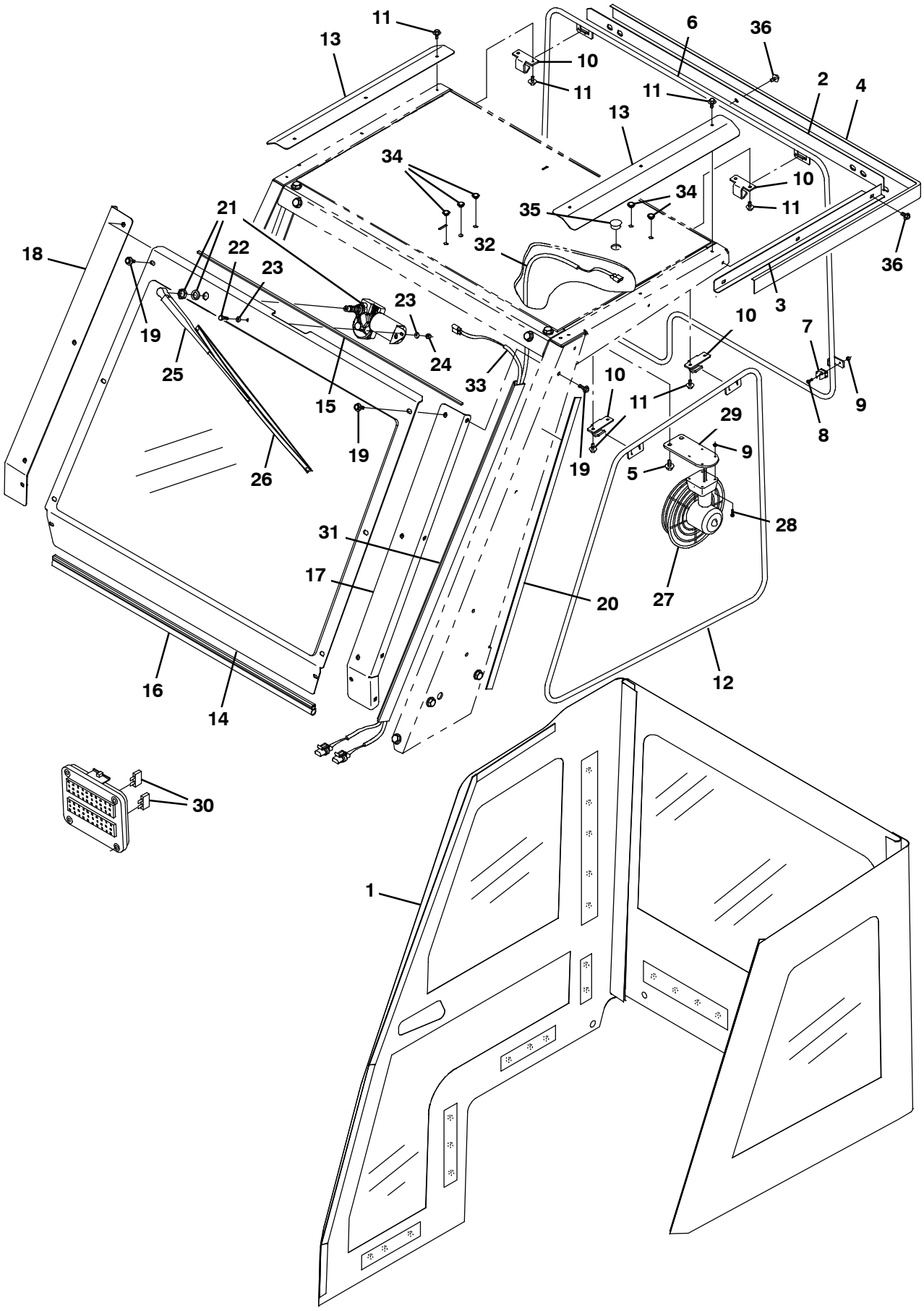

354977 - IC, NA

Fig. 7 - Cab Frame and Windows Group

NOTE: Cab Kit (For machines equipped with OHG), Tennant Part Number 9006307, includes; Fig. 7 and Fig. 8.
NOTE: Cab Kit (including OHG), Tennant Part Number 9006304, includes; Fig. 6, Fig. 7 and Fig. 8.

Ref.	Part No.	Serial Number	Description	Qty.
1	1049702	(000000-)	Panel Assy, Cab	1
2	1064550	(001966-)	Angle, Cab, Rear [Drip Ledge, S20]	1
3	1064551	(001966-)	Angle, Cab, Side [Drip Ledge, S20]	1
4	312584	(001966-)	Seal, Lip [76038ddur]	1
5	763045	(000000-)	Screw, Hex, M8 X 1.25 X 20, Fmg	2
6	1047690	(000000-)	Panel Wldt, Frame, Rear	1
7	1047592	(000000-)	Clip, Grip, Pipe, 0.50, Plstc	1
8	06927	(000000-)	Screw, Pan, Phl, M4 X 0.70 X 16, 4.8	1
9	02850	(000000-)	Nut, Hex, Lock, M4 X 0.70, Nl	4
10	1047653	(000000-)	Bracket, Mtg, Panel, Cab	4
11	361339	(000000-)	Screw, Hex, M6 X 1.00 X 16, Fmg	14
12	1047456	(000000-)	Panel Wldt, Frame, Cab	1
13	1047706	(000000-)	Plate, Shield, Top	2
14	1048849	(000000-)	Pane Assy, Windshield	1
15	1055606	(000000-)	Seal, .19, .25w 39.2l, Adh	1
16	1031617	(000000-)	Seal, Afmkt, Bulb, Str, .75d F/07ga 08ft	1
17	1045567	(000000-)	Angle, Mtg, Wndw, Lh	1
18	1045569	(000000-)	Angle, Mtg, Wndw, Rh	1
19	1037346	(000000-)	Screw, Hex, M8 X 1.25 X 25, 9.8, Sems	16
20	314012	(000000-)	Tape, Hook, 1.0w [Velcro]	1
21	1048222	(000000-)	Motor Assy, Ele, Wiper, 12vdc 85deg	1
22	09252	(000000-)	Screw, Hex, M5 X 0.80 X 20, 8.8	1
23	19066	(000000-)	Washer, Flat, 10	2
24	06549	(000000-)	Nut, Hex, Lock, M5 X 0.80, Nl	1
25	1048640	(000000-)	Arm, Wiper, Windshield 16.0l	1
26	1048639	(000000-)	Blade, Wiper, Windshield, 22.0l	1
27	55041	(000000-)	Fan, Defroster, 12vdc, 07.3d	1
28	09228	(000000-)	Screw, Hex, M4 X 0.70 X 20, 8.8	3
29	1049781	(000000-)	Bracket, Mtg, Fan	1
30	1049734	(000000-)	Fuse, Blade, 005a, 32vdc [Mini]	2
31	55034	(000000-)	Duct, Vyl, 0.74 X 1.50 .75d Max 48.0l	1
32	1050162	(000000-)	Harness, Fan, Ic [S20]	1
33	1048522	(000000-)	Harness, Wiper, Windshield, Ic [S20]	1
34	361346	(000000-)	Plug, Hole, Rnd, 0.38h .3l, Plstc	5
35	1053385	(000000-)	Plug, Hole, Rnd, 1.00h .14- .25, Blk Nyl	1
36	361339	(001966-)	Screw, Hex, M6 X 1.00 X 16, Fmg	4

Fig. 8 - Cab Door Group

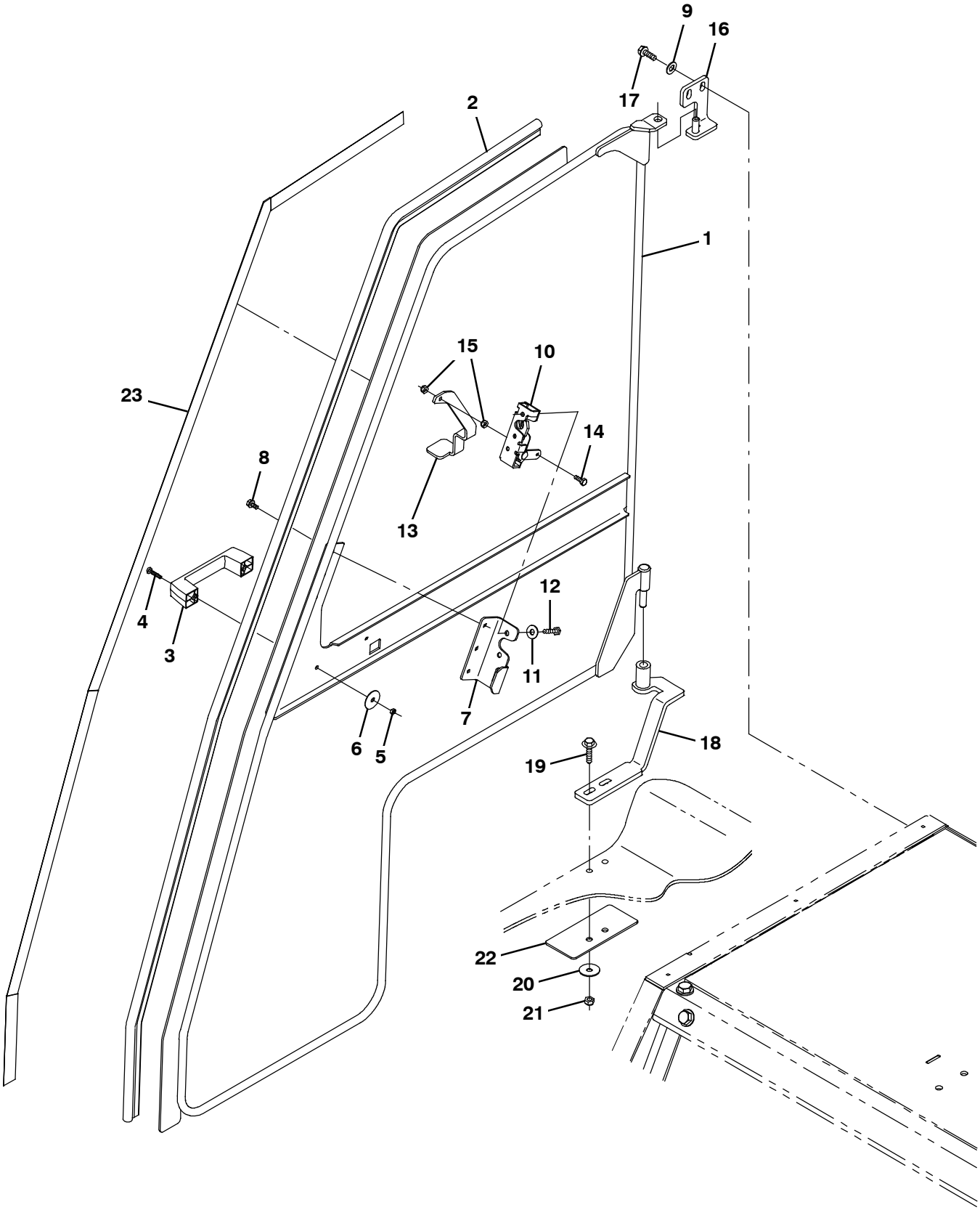

354983 - ALL

Fig. 8 - Cab Door Group

NOTE: Cab Kit (For machines equipped with OHG), Tennant Part Number 9006307, includes; Fig. 7 and Fig. 8.
NOTE: Cab Kit (including OHG), Tennant Part Number 9006304, includes; Fig. 6, Fig. 7 and Fig. 8.

Ref.	Part No.	Serial Number	Description	Qty.
1	1045404	(000000-)	Door Wldt, Cab	1
2	1048166	(000000-)	Seal, Afmkt, Bulb, Str, 0.58D 08Ft	1
3	1023920	(000000-)	Handle, Door	1
4	06935	(000000-)	Screw, Pan, Phl, M5 X 0.80 X 25, 4.8	2
5	06549	(000000-)	Nut, Hex, Lock, M5 X 0.80, Nl	2
6	41178	(000000-)	Washer, Flat, 0.25, Fendr	4
7	1052808	(000000-)	Angle, Mtg, Latch	1
8	74455	(000000-)	Screw, Hex, M6 X 1.00 X 12, Fmg	3
9	32485	(000000-)	Washer, Flat, 0.38, Sae	3
10	59661	(000000-)	Latch	1
11	41186	(000000-)	Washer, Flat, Belleville, .31	2
12	25046	(000000-)	Screw, Hex, .25- 20 X 1.00, G5	2
13	1053068	(000000-)	Bracket, Latch, Door	1
14	06942	(000000-)	Screw, Hex, M6 X 1.00 X 16, 8.8	1
15	08708	(000000-)	Nut, Hex, Lock, M6 X 1.00, Nl	2
16	1049687	(000000-)	Angle Wldt, Mtg, Door	1
17	763045	(000000-)	Screw, Hex, M8 X 1.25 X 20, Fmg	2
18	1047728	(000000-)	Bracket Wldt, Mtg, Door	1
19	1037355	(000000-)	Screw, Hex, M8 X 1.25 X 35, 9.8, Sems	2
20	30013	(000000-)	Washer, Flat, 0.31, Fendr	2
21	08709	(000000-)	Nut, Hex, Lock, M8 X 1.25, Nl	2
22	1048161	(000000-)	Plate, Sppt, Hinge	1
23	314012	(000000-)	Tape, Hook, 1.0w [Velcro]	1

Fig. 9 - Deluxe Suspension Seat Kit

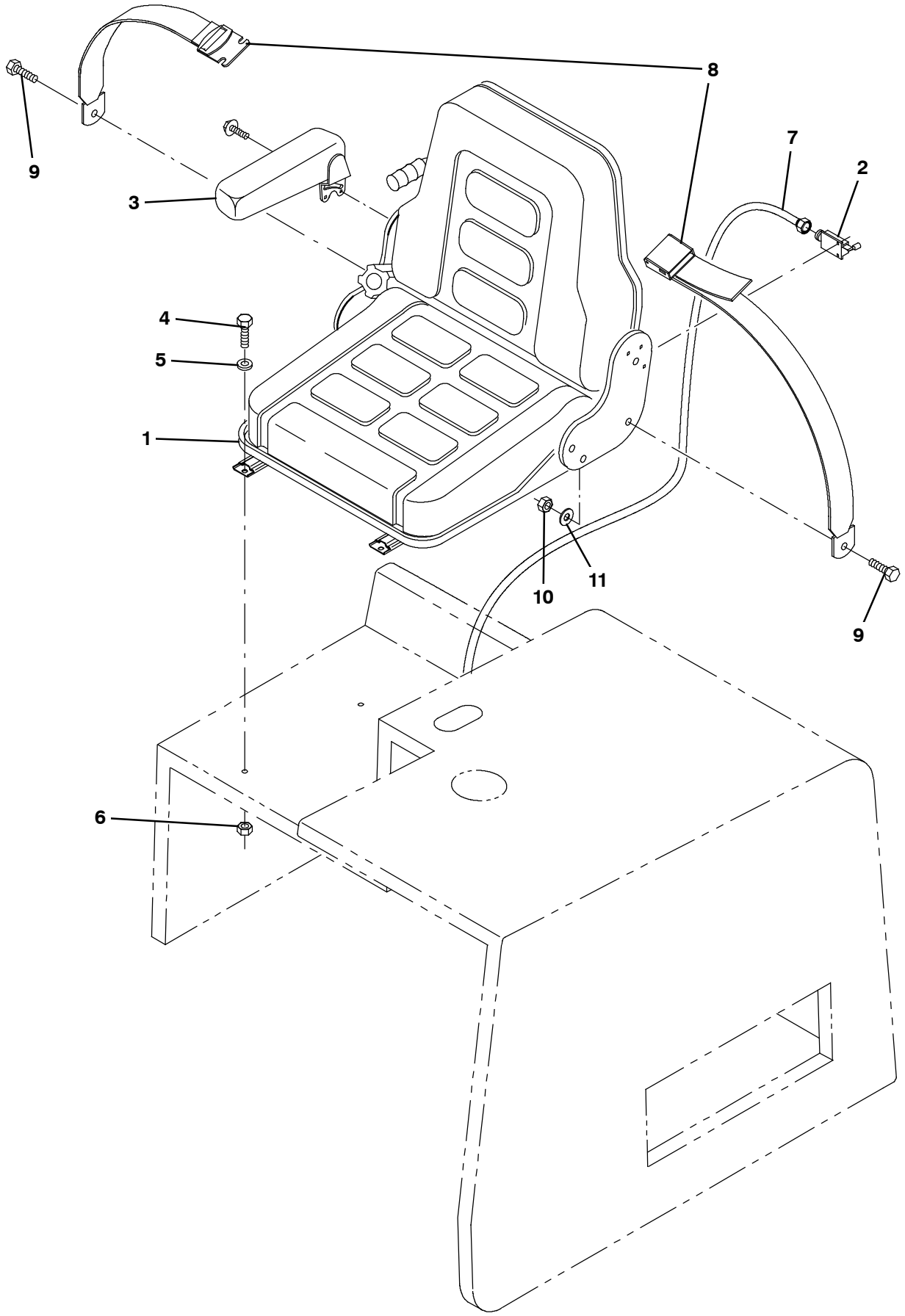

354970 - ALL

Fig. 9 - Deluxe Suspension Seat Kit

	Ref.	Part No.	Serial Number	Description	Qty.
▽		9006029	(000000-)	Seat Kit, Dlx, Ci [S20]	1
▲	1	1056543	(000000-)	Seat, Suspension [Grammer Gs12]	1
▲	2	69971	(000000-)	Switch, Seat	1
▲	3	71477	(000000-)	Armrest Assy, Rh, F/53845 [Grammer]	1
▲	4	41342	(000000-)	Screw, Hex, M8 X 1.25 X 40, 8.8	4
▲	5	32490	(000000-)	Washer, Flat, 0.25, Std	4
▲	6	08709	(000000-)	Nut, Hex, Lock, M8 X 1.25, Nl	4
▲	7	1056539	(000000-)	Harness, Seat [S20]	1
▲	8	30533	(000000-)	Seatbelt, 60.0l	1
▲	9	39283	(000000-)	Screw, Hex, M10 X 1.50 X 25, 8.8	2
▲	10	41430	(000000-)	Nut, Hex, Lock, M10 X 1.5, Nl	2
▲	11	32490	(000000-)	Washer, Flat, 0.25, Std	2

Fig. 10 - Seat Belt Kit

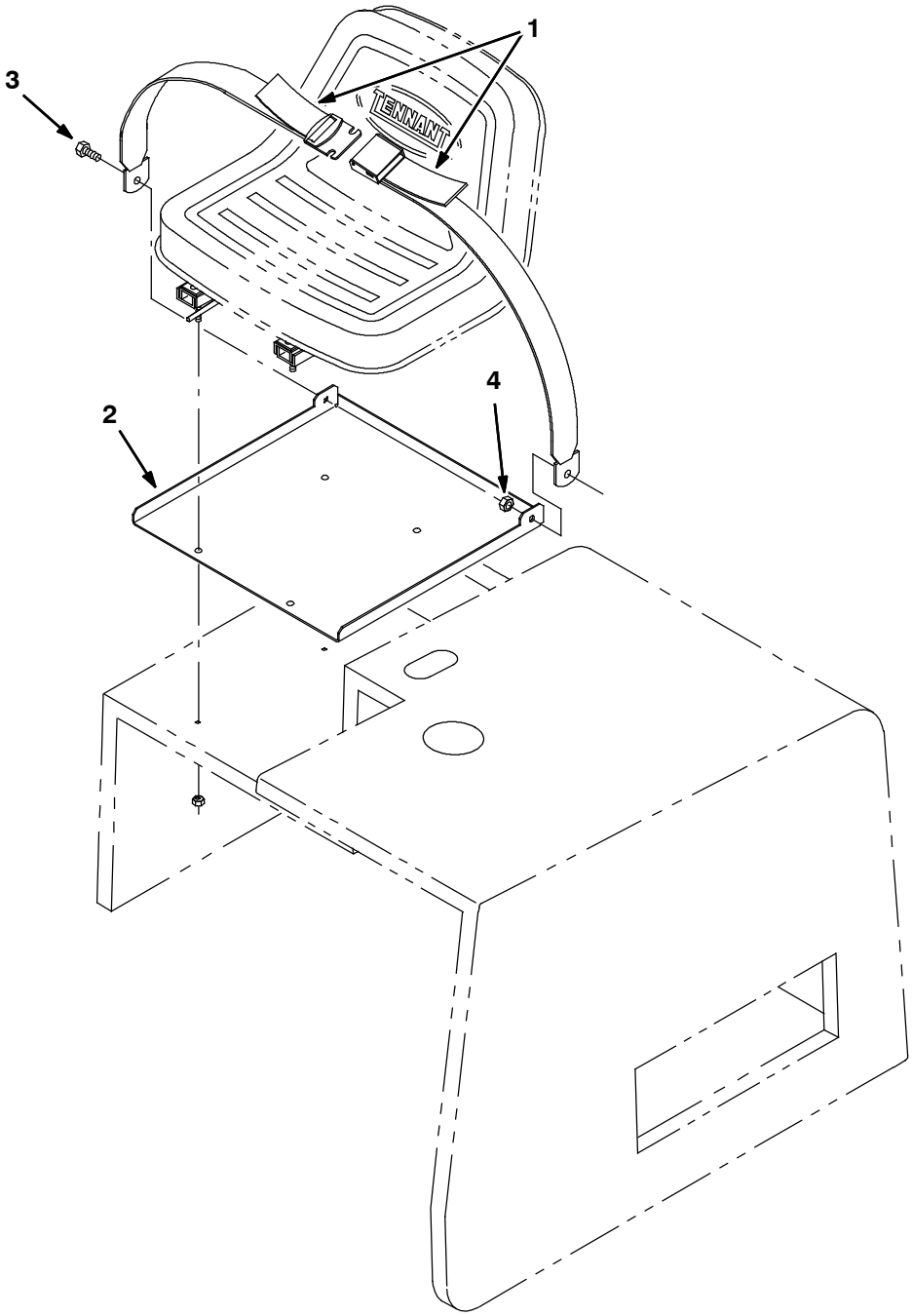

350033 - ALL

	Ref.	Part No.	Serial Number	Description	Qty.
▽		360932	(000000-)	Seatbelt Kit, Ci [6400]	1
▲	1	30533	(000000-)	Seatbelt, 60.0l	1
▲	2	360630	(000000-)	Plate, Mtg, Seatbelt	1
▲	3	06961	(000000-)	Screw, Hex, M10 X 1.50 X 20, 8.8	2
▲	4	41430	(000000-)	Nut, Hex, Lock, M10 X 1.5, Nl	2

Fig. 11 - Corner Bumper Kit

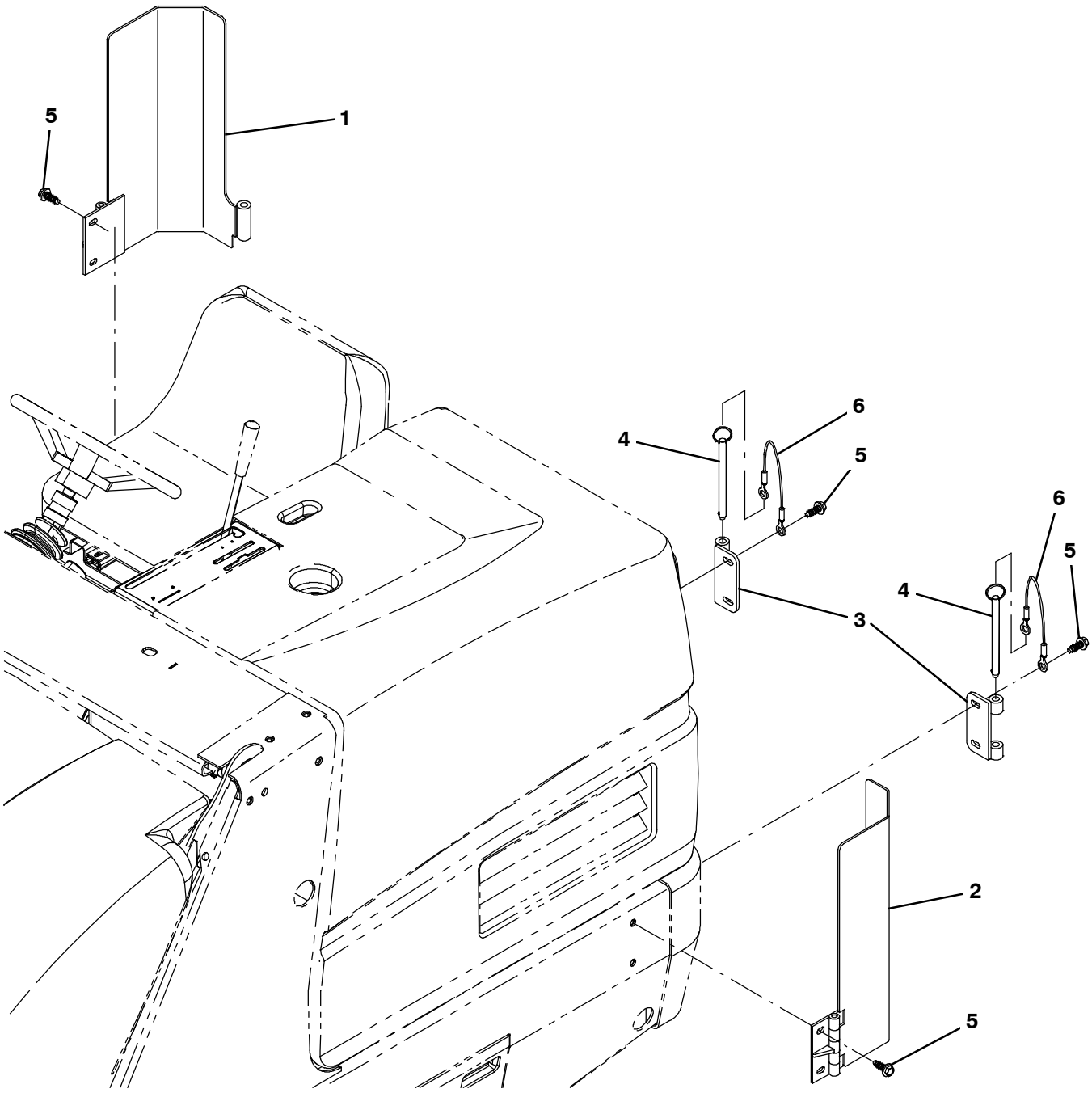

354973 - ALL

	Ref.	Part No.	Serial Number	Description	Qty.
▽		9006021	(000000-)	Bumper Kit, Corner, Rear, Ci [S20]	1
▲	1	1047115	(000000-)	Angle Wldt, Bmpr, Tower, Rh	1
▲	2	1047116	(000000-)	Angle Wldt, Bmpr, Tower, Lh	1
▲	3	1048408	(000000-)	Bracket Wldt, Mtg, Bmpr	2
▲	4	1043176	(000000-)	Pin, Hitch, .500d X 6.00l, Pl	2
▲	5	1037358	(000000-)	Screw, Hex, M10 X 1.50 X 35, 9.8, Sems	8
▲	6	87172	(000000-)	Cable, Glv .13d 010.0l .52eye /.52eye	2

Fig. 12 - Dual Side Brush Lift Group, LH

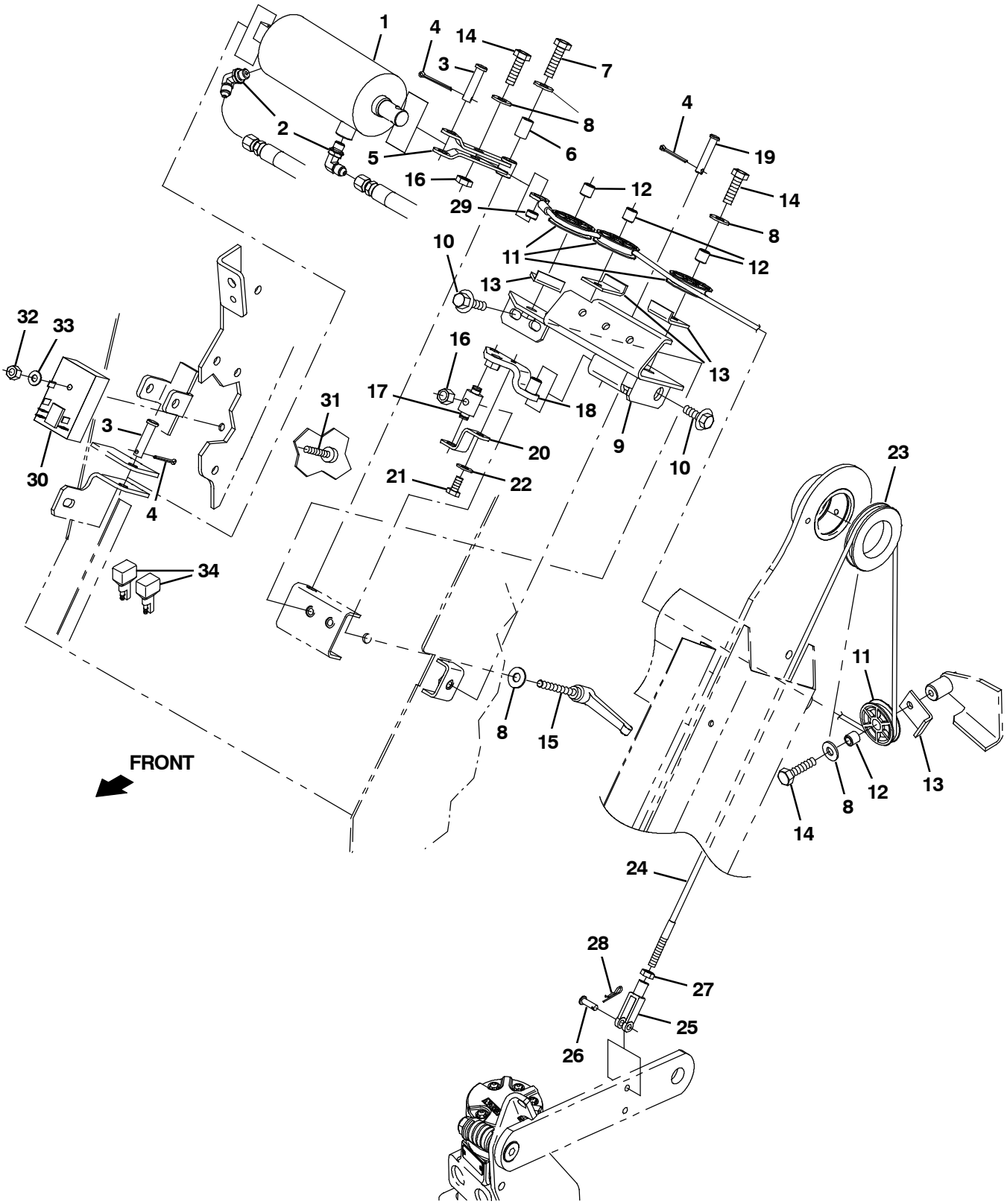

354934 - IC, NA

Fig. 12 - Dual Side Brush Lift Group, LH

NOTE: Dual Side Brush Kit, Tennant Part Number 9006040, includes; Fig. 12, Fig. 13, Fig. 14, Fig. 15 and Fig. 16.

Ref.	Part No.	Serial Number	Description	Qty.
1	1048556	(000000-)	Cyl, Hyd, 2.5b 9.0l 01.50strk, 2500	1
2	77097	(000000- 002999)	Fitting, Hyd, E90, Jm04/Om04	2
2	762427	(003000-)	Fitting, Hyd, E90, Fm04/Om04	2
3	29558	(000000-)	Pin, Clevis, 0.37d X 1.50l	2
4	08175	(000000-)	Pin, Cotter, .125 X 1.25	3
5	1045647	(000000-)	Pivot Wldt	1
6	51562	(000000-)	Tube, 0.33id 0.51od 00.8l, Stl, Pl	1
7	06955	(000000-)	Screw, Hex, M8 X 1.25 X 35, 8.8	1
8	32491	(000000-)	Washer, Flat, 0.31, Std	7
9	1045563	(000000-)	Plate Wldt	1
10	1037346	(000000-)	Screw, Hex, M8 X 1.25 X 25, 9.8, Sems	3
11	369781	(000000-)	Pulley, Cable, 1.5d Nyl	4
12	222460	(000000-)	Sleeve, P/M, 0.32b 0.50d 0.5l [430ss]	4
13	54400	(000000-)	Bracket, Angle, Keeper, Cable	4
14	76570	(000000-)	Screw, Hex, M8 X 1.25 X 30, 8.8	5
15	360414	(000000-)	Lever, Adj, Metal	1
16	08709	(000000-)	Nut, Hex, Lock, M8 X 1.25, Nl	2
17	71126	(000000-)	Block, Adj, Pivot	1
18	1045571	(000000-)	Pivot Wldt, Sba	1
19	397249	(000000-)	Pin, Clevis, 0.31d X 1.62l	1
20	1045475	(000000-)	Angle, Bottom	1
21	06941	(000000-)	Screw, Hex, M6 X 1.00 X 10, 8.8	1
22	32490	(000000-)	Washer, Flat, 0.25, Std	1
23	360077	(000000-)	Pulley, Cable, 3.0d 1.76b, .25d Cable	1
24	1046498	(000000-)	Cable, Ss .12d 89.0l .55eye / M6- 1.0	1
25	1035826	(000000-)	Clevis, Adj, M6 Pin, M6 X 1.0 Rh, Pl	1
26	14605	(000000-)	Pin, Clevis, 0.25d X 0.75l	1
27	07785	(000000-)	Nut, Hex, Std, M6 X 1.00, Ss	1
28	08085	(000000-)	Pin, Cotter, Hair, 0.31D .058 Wir	1
29	360801	(000000-)	Sleeve, 0.32b 0.50d 0.3l, 2cham, Ss	1
30	1046037	(000000-)	Timer, 12vdc, 10a [Left Hand Side Brush]	1
31	1054873	(000000-)	Screw, Pan, Phl, M6 X 1.0 X 40, Blk	1
32	41359	(000000-)	Nut, Hex, Std, M6 X 1.00, 8	1
33	01684	(000000-)	Washer, Flat, 0.27b 0.69d .05, Ss	1
34	222290	(000000-)	Diode, Ele, Plug	1

Fig. 13 - Dual Side Brush Motor and Pivot Group, LH

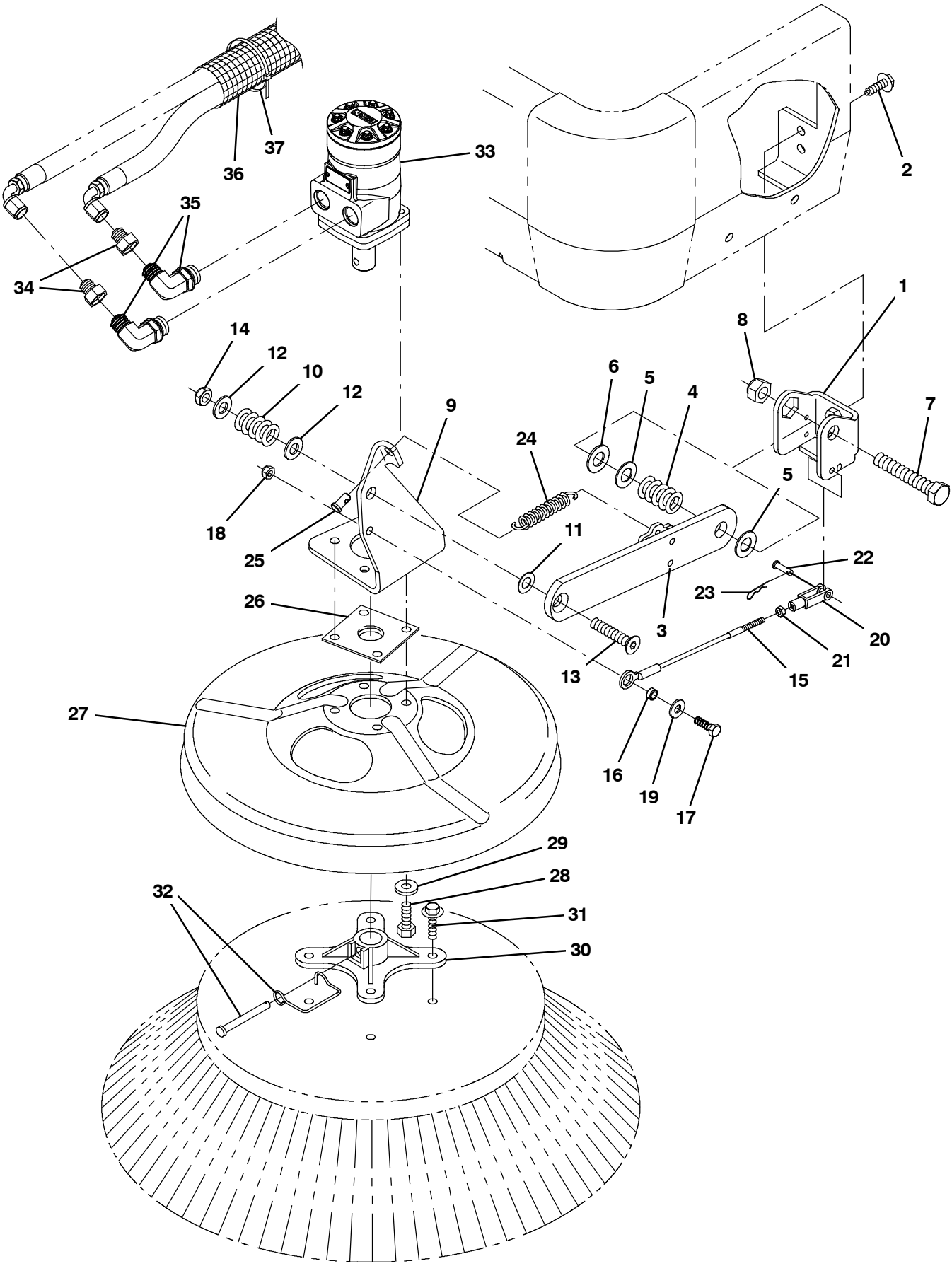

354935 - IC, NA

Fig. 13 - Dual Side Brush Motor and Pivot Group, LH

NOTE: Dual Side Brush Kit, Tennant Part Number 9006040, includes; Fig. 12, Fig. 13, Fig. 14, Fig. 15 and Fig. 16.

	Ref.	Part No.	Serial Number	Description	Qty.
	1	1042727	(000000-)	Bracket, Sidebrush, Lh	1
	2	1037358	(000000-)	Screw, Hex, M10 X 1.50 X 35, 9.8, Sems	2
	3	1042730	(000000-)	Arm Wldt, Lift, Lh	1
	4	360081	(000000-)	Spring, Dsl, 1.25od 0.62id 1.80l	1
	5	64425	(000000-)	Washer, Thrust, 0.61b 1.25d .06, Fgl	2
	6	15331	(000000-)	Washer, Flat, 0.62, Sae	1
	7	06988	(000000-)	Screw, Hex, M16 X 2.00 X 90, 8.8	1
	8	33342	(000000-)	Nut, Hex, Lock, M16 X 2.00, Nl	1
	9	1046248	(000000-)	Bracket, Mtg, Motor, Lh	1
	10	360357	(000000-)	Spring, Dsl, 1.00od 0.50id 1.25l	1
	11	59633	(000000-)	Washer, Thrust, 0.53b 1.00d 0.03w[Fbrgl]	1
	12	32486	(000000-)	Washer Flat,0.50,Sae	2
	13	27108	(000000-)	Screw, Flt, Soc, .50- 13 X 2.50, Al	1
	14	86029	(000000-)	Nut, Hex, Flexlock, .50- 13, Thin	1
	15	1048311	(000000-)	Cable, Ss .19d 008.5l .55eye / M6- 1.0	1
	16	360801	(000000-)	Sleeve, 0.32b 0.50d 0.3l, 2cham, Ss	1
	17	09010	(000000-)	Screw, Hex, M8 X 1.25 X 25, Ss	1
	18	08713	(000000-)	Nut, Hex, Lock, M8 X 1.25, Nl, Ss	1
	19	01685	(000000-)	Washer, Flat, 0.38b 0.88d .08, Ss	1
	20	1035826	(000000-)	Clevis, Adj, M6 Pin, M6 X 1.0 Rh, Pl	1
	21	07785	(000000-)	Nut, Hex, Std, M6 X 1.00, Ss	1
	22	14605	(000000-)	Pin, Clevis, 0.25d X 0.75l	1
	23	08085	(000000-)	Pin, Cotter, Hair, 0.31d .058 Wir	1
	24	29499	(000000-)	Spring, Extn, 0.75od 0.11wir 04.5l	1
	25	41305	(000000-)	Pin, Clevis, 0.37d X 0.75l	1
	26	16082	(000000-)	Guard, String, Motor, Brush	1
	27	1054256	(000000-)	Guard, Brush	1
	28	46559	(000000-)	Screw, Hex, .38- 16 X 1.25, Nl	4
	29	32492	(000000-)	Washer, Flat, 0.38, Std	4
	30	47501	(000000-)	Hub, Adapter, Brush, 1.00b	1
	31	39396	(000000-)	Screw, Hex, .31- 12 X 1.50, Fmg [Ab]	4
	32	84581	(000000-)	Pin Assy, Side Brush W/ Clip	1
	33	361014	(000000- 002395)	Motor, Hyd, Gear, Int 09.7 Bi- Dir 1500 (See Breakdowns)	2
▽	33	1068802	(002396-)	Motor, Hyd, Gear, Int 09.7 Bi- Dir 1500	2
▲		22615	(002396-)	Seal Kit, Motor [Cl]	1
	34	47753	(000000- 002999)	Fitting, Hyd, Str, Jf08/Jm06	2
	34	762458	(003000-)	Fitting, Hyd, Str, Ff08/Fm06	2
	35	56821	(000000- 002999)	Fitting, Hyd, E90, Jm08/Om10	2
	35	767411	(003000-)	Fitting, Hyd, E90, Fm08/Om10	2
	36	31646	(000000-)	Sleeve, Nyl, 1.63id 25.0l	1
	37	49266	(000000-)	Tie, Cable, Nyl, 07.3l .19w 1.8 Max D	1

Fig. 14 - Dual Side Brush Wire Harness Group

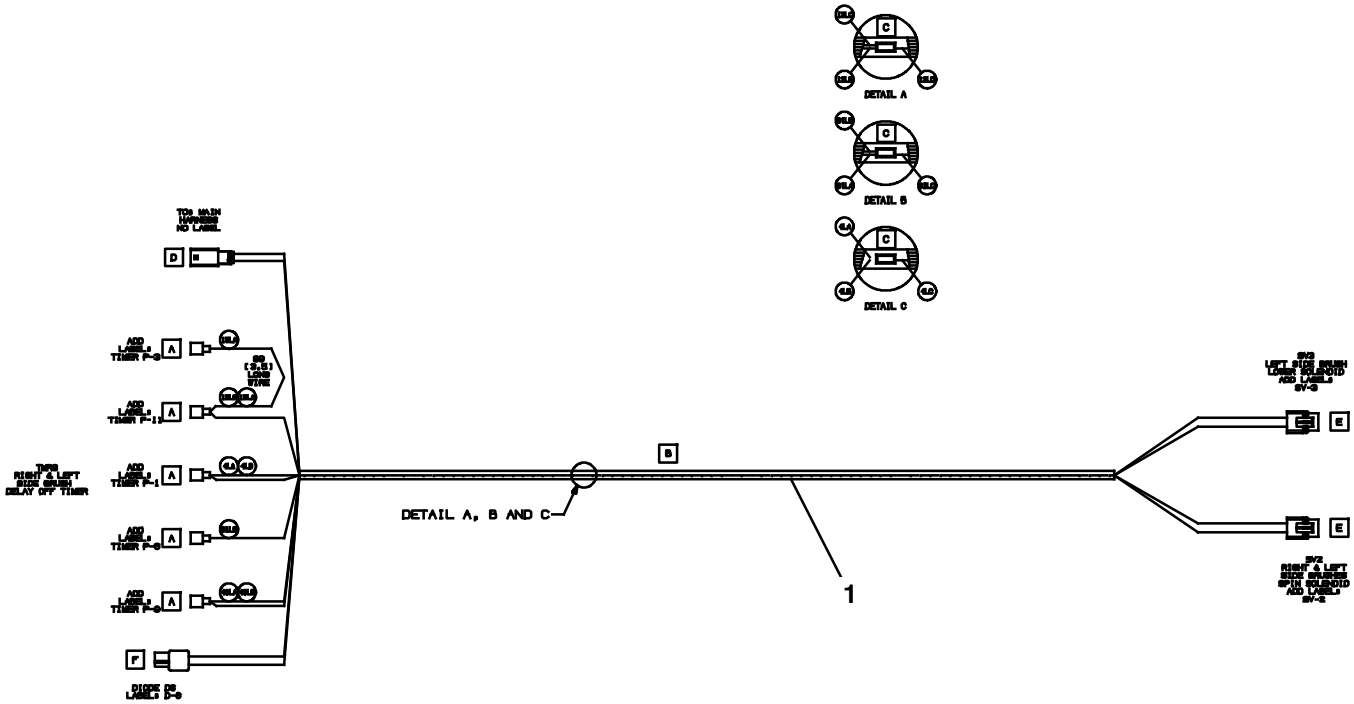

NOTE: Dual Side Brush Kit, Tennant Part Number 9006040, includes; Fig. 12, Fig. 13, Fig. 14, Fig. 15 and Fig. 16.

Ref.	Part No.	Serial Number	Description	Qty.
1	1048526	(000000-)	Harness, Brush, Side, Lh, 12vdc [S20]	1

Fig. 15 - Dual Side Brush Hydraulic Valve Group

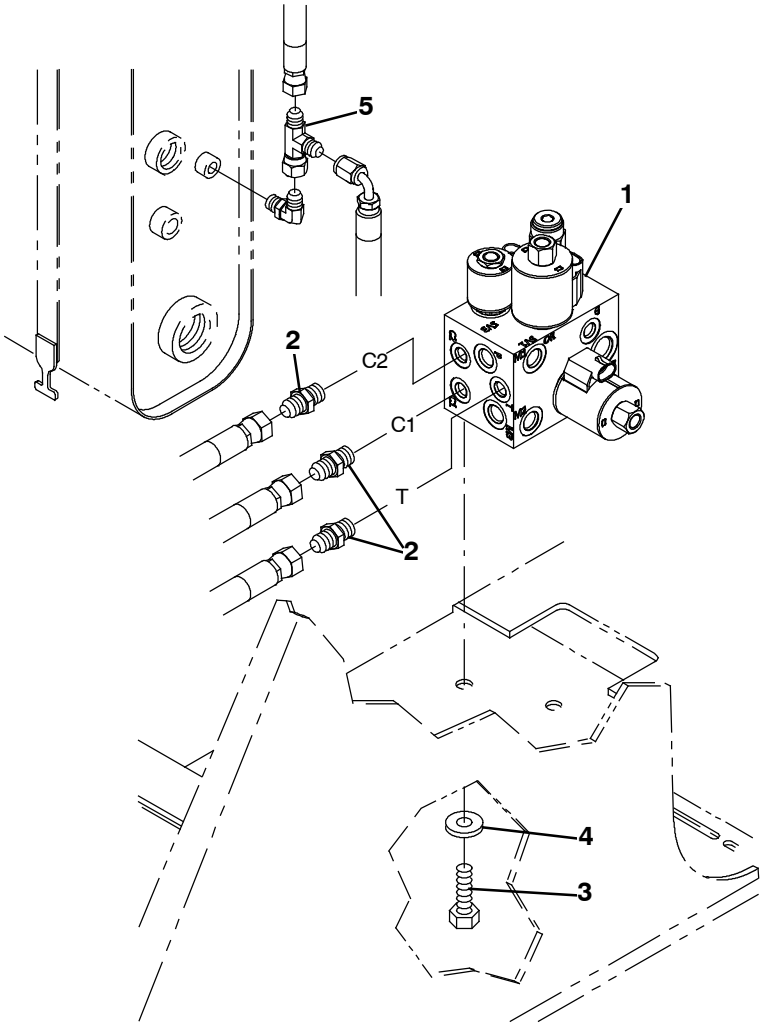

354967 - IC, NA

NOTE: Dual Side Brush Kit, Tennant Part Number 9006040, includes; Fig. 12, Fig. 13, Fig. 14, Fig. 15 and Fig. 16.

Ref.	Part No.	Serial Number	Description	Qty.
1	1045853	(000000- 006474)	Valve, Hyd, Solenoid, 12vdc	1
1	1237085	(006475-)	Valve, Hyd, Solenoid, 12vdc	1
2	55586	(000000- 002999)	Fitting, Hyd, Str, Jm04/Om04	3
2	762428	(003000-)	Fitting, Hyd, Str, Fm04/Om04	3
3	06961	(000000-)	Screw, Hex, M10 X 1.50 X 20, 8.8	2
4	32492	(000000-)	Washer, Flat, 0.38, Std	2
5	57988	(000000- 002999)	Fitting, Hyd, Tee, Jf04/Jm04/Jm04, Run	1
5	767422	(003000-)	Fitting, Hyd, Tee, Ff04/Fm04/Fm04, Run	1

Fig. 16 - Dual Side Brush Hydraulic Hose Diagram

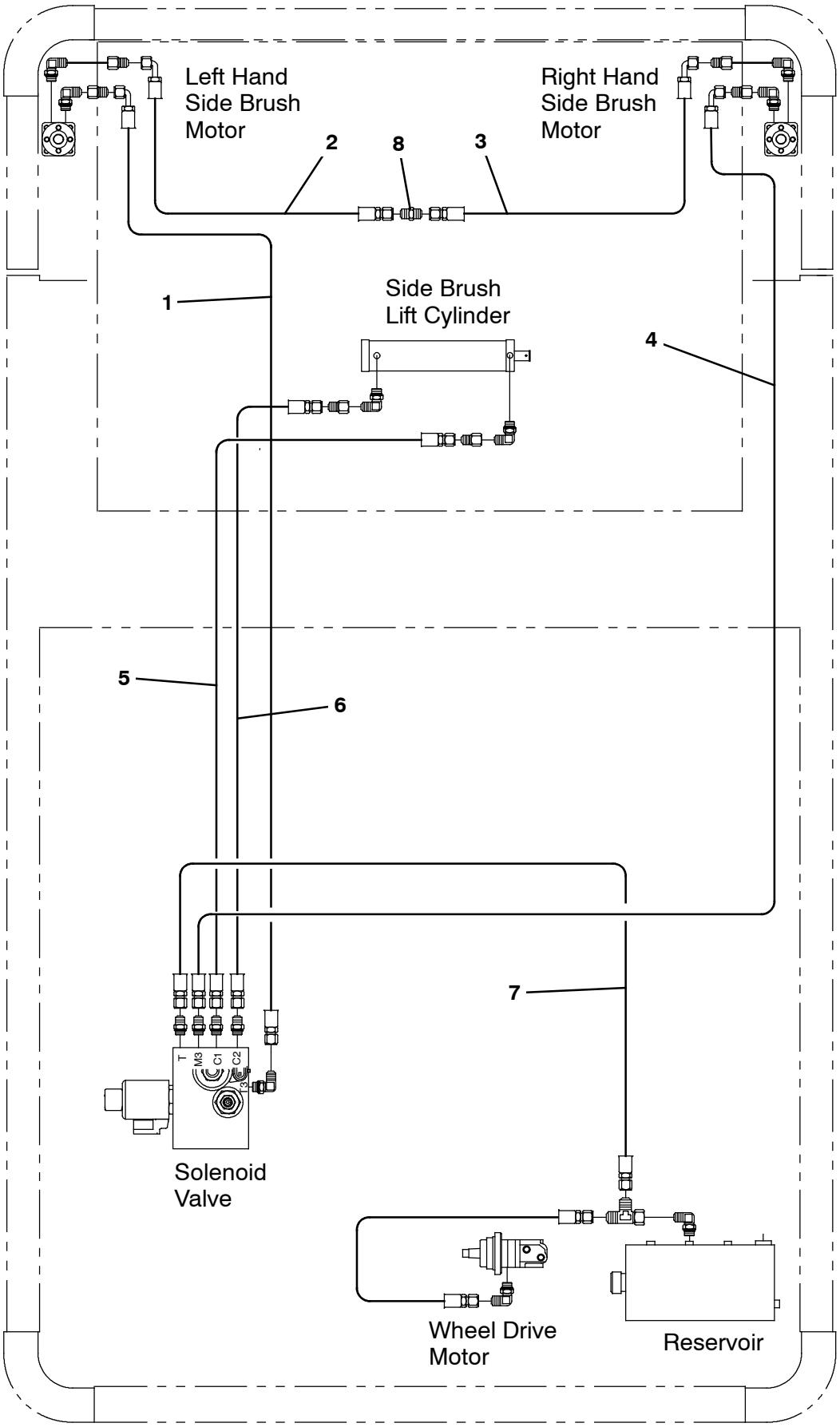

354968 - ALL, NA

Fig. 16 - Dual Side Brush Hydraulic Hose Diagram

NOTE: Dual Side Brush Kit, Tennant Part Number 9006040, includes; Fig. 12, Fig. 13, Fig. 14, Fig. 15 and Fig. 16.

Ref.	Part No.	Serial Number	Description	Qty.
1	1043049	(000000- 002999)	Hose, Hyd, Tc06, Jf06e90/Jf06str, 120.0	1
1	1071759	(003000-)	Hose, Hyd, Tc06, Of06e90/Of06str, 120.0	1
2	1041941	(000000- 002999)	Hose, Hyd, Tc06, Jf06e90/Jf06str, 086.0	1
2	1071940	(003000-)	Hose, Hyd, Tc06, Of06e90/Of06str, 086.0	1
3	31597	(000000- 002999)	Hose, Hyd, Med06, Jf06e90/Jf06str, 068.0	1
3	1071776	(003000-)	Hose, Hyd, Med06, Of06e90/Of06str, 068.0	1
4	361041	(000000- 002999)	Hose, Hyd, Med06, Jf06e90/Jf06str, 114.0	1
4	1071720	(003000-)	Hose, Hyd, Med06, Of06e90/Of06str, 114.0	1
5	1052670	(000000- 002999)	Hose, Hyd, Tc04, Jf04str/Jf04str, 048.0	1
5	1071938	(003000-)	Hose, Hyd, Tc04, Of04str/Of04str, 048.0	1
6	1036203	(000000- 002999)	Hose, Hyd, Tc04, Jf04str/Jf04str, 042.0	1
6	1071764	(003000-)	Hose, Hyd, Tc04, Of04str/Of04e90, 070.0	1
7	1040629	(000000- 002999)	Hose, Hyd, Tc04, Jf04str/Jf04str, 058.0	1
7	1071939	(003000-)	Hose, Hyd, Tc04, Of04str/Of04str, 058.0	1
8	15803	(000000- 002999)	Fitting, Hyd, Str, Jm06/Jm06	1
8	762443	(003000-)	Fitting, Hyd, Str, Fm06/Fm06 Bh	1

Fig. 17 - Right Hand Side Brush Dust Control Kit (000000-006329)

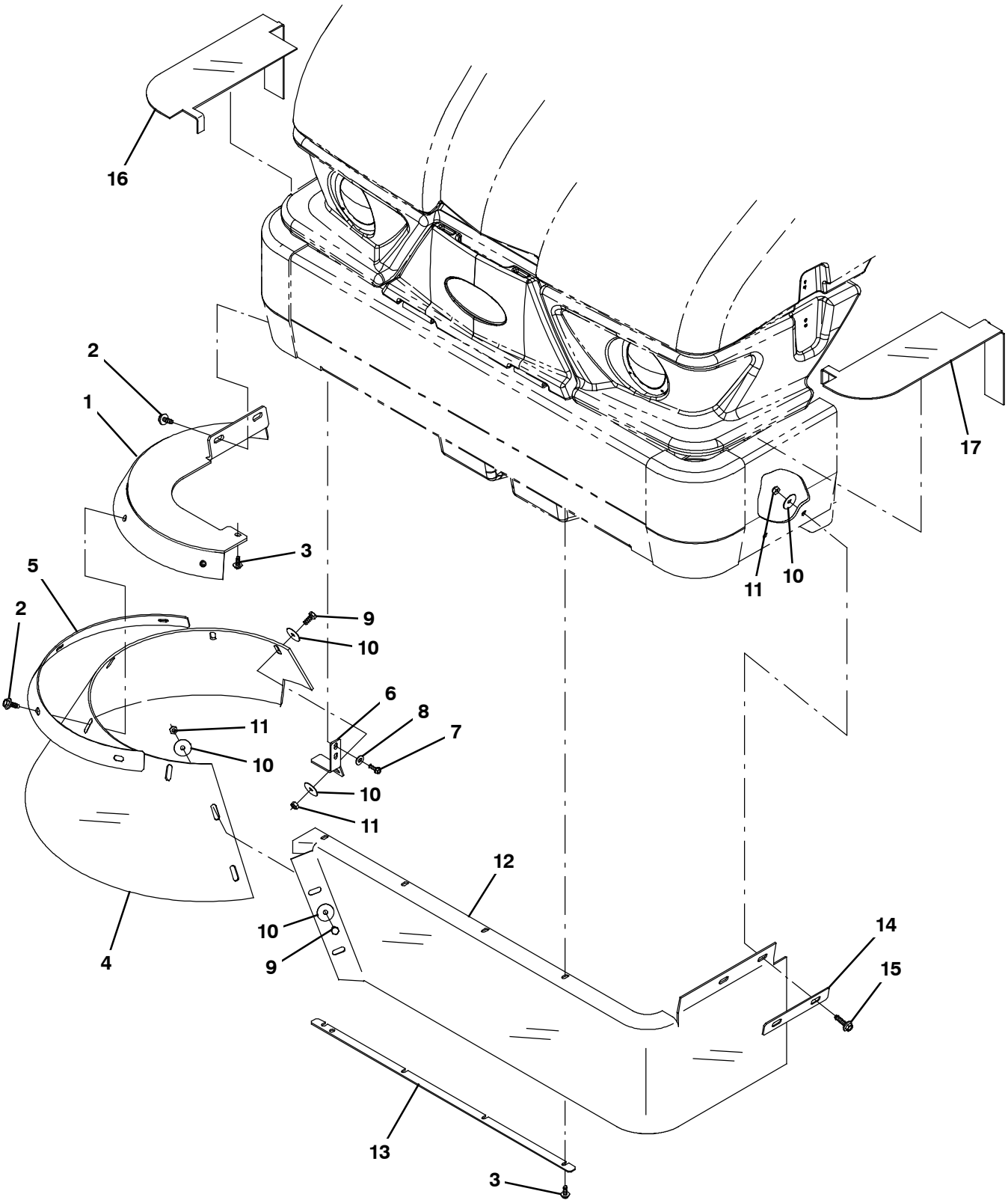

354969 - ALL

Fig. 17 - Right Hand Side Brush Dust Control Kit (000000-006329)

	Ref.	Part No.	Serial Number	Description	Qty.
▽		9006013	(000000-006329)	Sbdc Kit, W/O Lh Side Brush, Ci [S20]	1
▲	1	1054371	(000000-006329)	Support Wldt, Rh, Sbdc	1
▲	2	1037346	(000000-006329)	Screw, Hex, M8 X 1.25 X 25, 9.8, Sems	6
▲	3	1040467	(000000-006329)	Screw, Hex, M6 X 1.00 X 20, 9.8, Sems	5
▲	4	1054391	(000000-006329)	Skirt, Brush, Side, Sbdc	1
▲	5	1054567	(000000-006329)	Retainer, Skirt	1
▲	6	1047696	(000000-006329)	Bracket, Sbdc, Rh	1
▲	7	12459	(000000-006329)	Screw, Hex, M6 X 1.00 X 20, Fmg	2
▲	8	32490	(000000-006329)	Washer, Flat, 0.25, Std	2
▲	9	09740	(000000-006329)	Screw, Hex, M8 X 1.25 X 20, Ss	3
▲	10	30013	(000000-006329)	Washer, Flat, 0.31, Fendr	8
▲	11	08709	(000000-006329)	Nut, Hex, Lock, M8 X 1.25, Nl	5
▲	12	1054625	(000000-006329)	Skirt, Brush, Side, Sbdc [W/O Lhsb]	1
▲	13	1048720	(000000-006329)	Retainer, Skirt	1
▲	14	1048883	(000000-006329)	Retainer, Skirt	1
▲	15	1037355	(000000-006329)	Screw, Hex, M8 X 1.25 X 35, 9.8, Sems	2
▲	16	1047773	(000000-006329)	Seal, Top, Sbdc	1
▲	17	1054369	(000000-006329)	Seal, Top, Lh, Sbdc	1

Fig. 18 - Right Hand Side Brush Dust Control Kit (006330-)

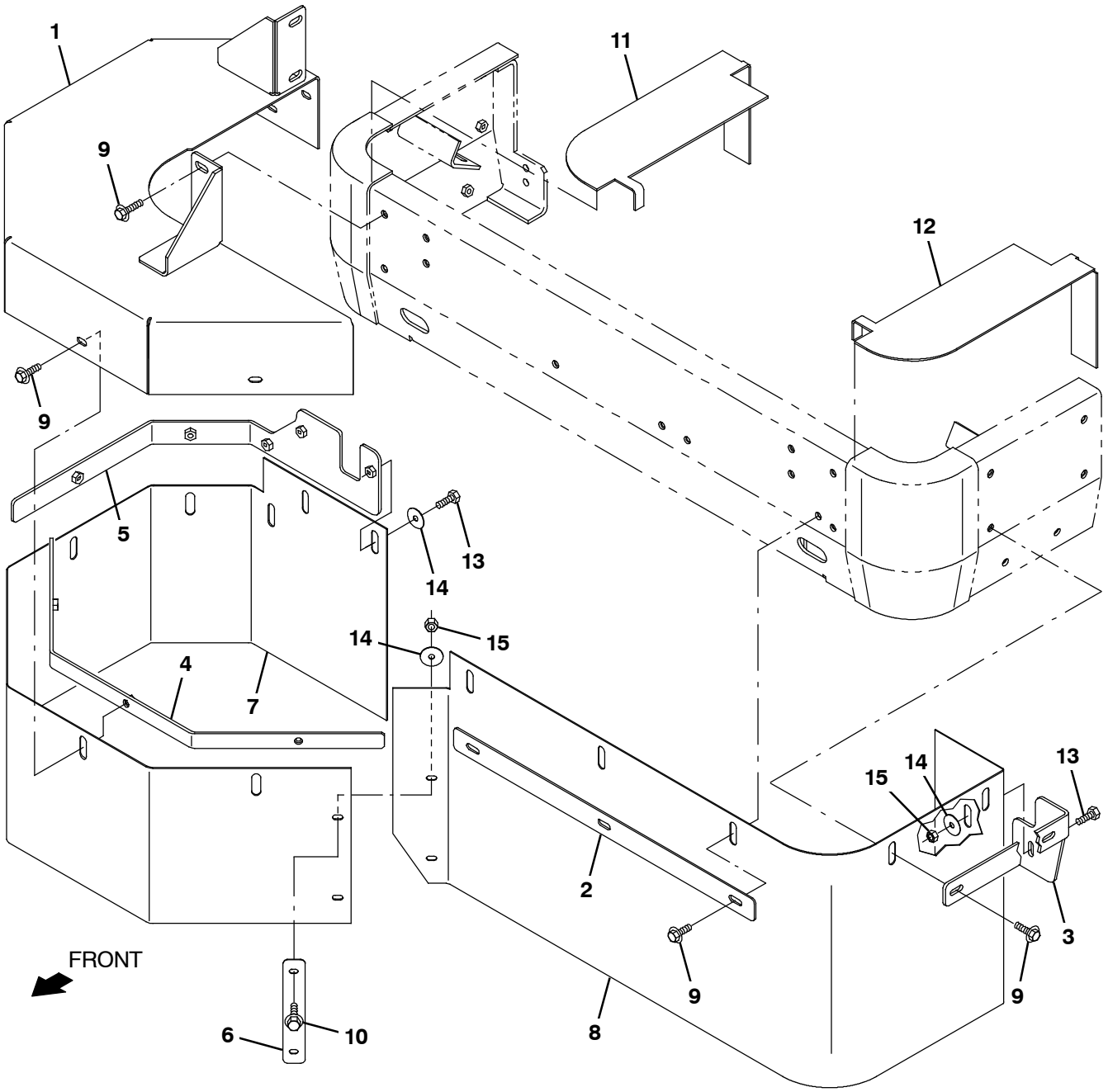

356805 - ALL

Fig. 18 - Right Hand Side Brush Dust Control Kit (006330-)

	Ref.	Part No.	Serial Number	Description	Qty.
▽		9017557	(006330-)	Sbdc Kit, W/O Lh Side Brush, Ci [S20]	1
▲	1	1076207	(006330-)	Cover Wldt, Rh, Sbdc [S20]	1
▲	2	1076216	(006330-)	Strip, Retainer, Front, Sbdc	1
▲	3	1076218	(006330-)	Retainer, Skirt, Lh Side	1
▲	4	1076213	(006330-)	Strip, Retainer, Skirt, Sbdc	1
▲	5	1076211	(006330-)	Bracket, Retainer, Skirt, Rh, Sbdc	1
▲	6	1076292	(006330-)	Plate, Support, Skirt Sbdc	1
▲	7	1076210	(006330-)	Skirt, Front, Rh, Sbdc, Rpd [S20]	1
▲	8	1076215	(006330-)	Skirt, Front, Single Sbdc, Rpd [S20]	1
▲	9	1037354	(006330-)	Screw, Hex, M8 X 1.25 X 30, 9.8, Sems	16
▲	10	1037346	(006330-)	Screw, Hex, M8 X 1.25 X 25, 9.8, Sems	2
▲	11	1047773	(006330-)	Seal, Top, Sbdc	1
▲	12	1054369	(006330-)	Seal, Top, Lh, Sbdc	1
▲	13	39277	(006330-)	Screw, Hex, M8 X 1.25 X 25, 8.8	2
▲	14	30013	(006330-)	Washer, Flat, 0.31, Fendr	4
▲	15	08709	(006330-)	Nut, Hex, M8 X 1.25	3

Fig. 19 - Dual Side Brush Dust Control Kit (000000-006329)

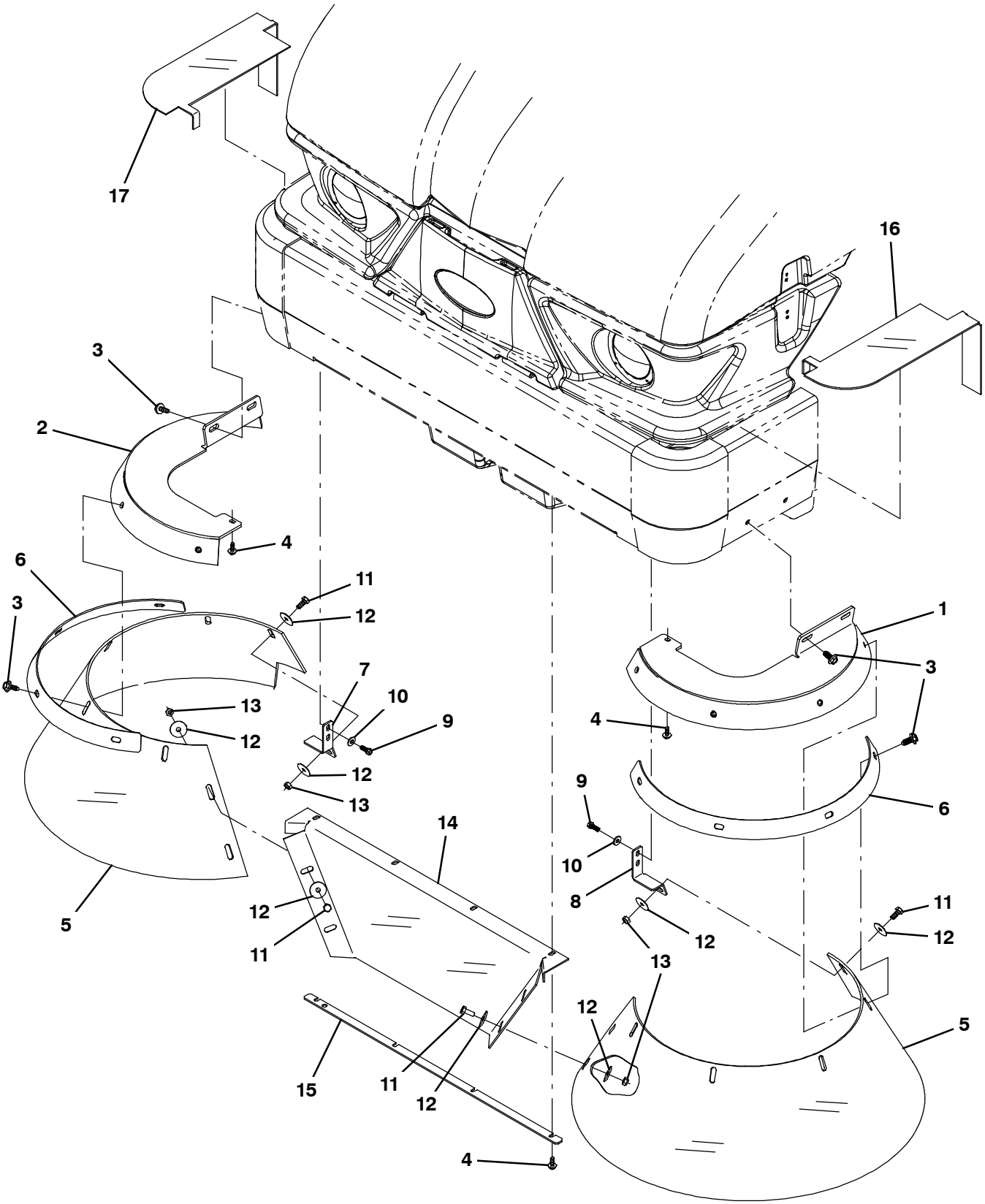

354971 - IC

Fig. 19 - Dual Side Brush Dust Control Kit (000000-006329)

	Ref.	Part No.	Serial Number	Description	Qty.
▽		9006014	(000000-006329)	Sbdc Kit, W/ Lh Side Brush, Ci [S20]	1
▲	1	1054374	(000000-006329)	Support Wldt, Lh, Sbdc	1
▲	2	1054371	(000000-006329)	Support Wldt, Rh, Sbdc	1
▲	3	1037346	(000000-006329)	Screw, Hex, M8 X 1.25 X 25, 9.8, Sems	12
▲	4	1040467	(000000-006329)	Screw, Hex, M6 X 1.00 X 20, 9.8, Sems	6
▲	5	1054391	(000000-006329)	Skirt, Brush, Side, Sbdc	2
▲	6	1054567	(000000-006329)	Retainer, Skirt	2
▲	7	1047696	(000000-006329)	Bracket, Sbdc, Rh	1
▲	8	1048785	(000000-006329)	Bracket, Sbdc, Lh	1
▲	9	12459	(000000-006329)	Screw, Hex, M6 X 1.00 X 20, Fmg	4
▲	10	32490	(000000-006329)	Washer, Flat, 0.25, Std	4
▲	11	09740	(000000-006329)	Screw, Hex, M8 X 1.25 X 20, Ss	6
▲	12	30013	(000000-006329)	Washer, Flat, 0.31, Fendr	12
▲	13	08709	(000000-006329)	Nut, Hex, Lock, M8 X 1.25, Nl	6
▲	14	1048718	(000000-006329)	Skirt, Sbdc, Sba, Lh	1
▲	15	1048720	(000000-006329)	Retainer, Skirt	1
▲	16	1054369	(000000-006329)	Seal, Top, Lh, Sbdc	1
▲	17	1047773	(000000-006329)	Seal, Top, Sbdc	1

Fig. 20 - Dual Side Brush Dust Control Kit (006330-)

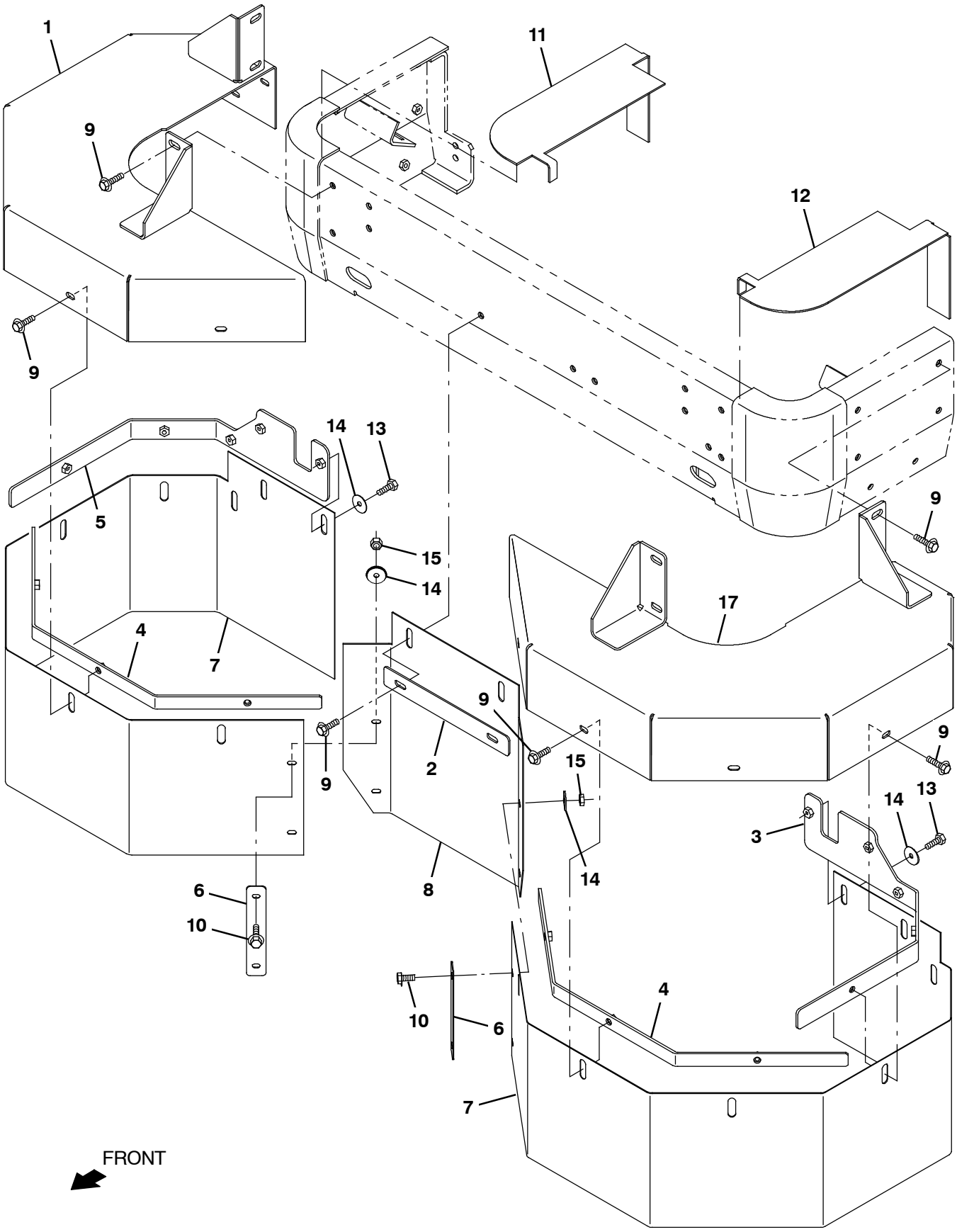

356806 - IC

Fig. 20 - Dual Side Brush Dust Control Kit (006330-)

	Ref.	Part No.	Serial Number	Description	Qty.
▽		9017556	(006330-)	Sbdc Kit, W/ Lh Side Brush, Ci [S20]	1
▲	1	1076207	(006330-)	Cover Wldt, Rh, Sbdc [S20]	1
▲	2	1076216	(006330-)	Strip, Retainer, Front, Sbdc	1
▲	3	1076218	(006330-)	Retainer, Skirt, Lh Side	1
▲	4	1076213	(006330-)	Strip, Retainer, Skirt, Sbdc	1
▲	5	1076211	(006330-)	Bracket, Retainer, Skirt, Rh, Sbdc	1
▲	6	1076292	(006330-)	Plate, Support, Skirt Sbdc	2
▲	7	1076210	(006330-)	Skirt, Front, Rh, Sbdc, Rpd [S20]	2
▲	8	1076264	(006330-)	Skirt, Front, Dual Sbdc, Rpd [S20]	1
▲	9	1037354	(006330-)	Screw, Hex, M8 X 1.25 X 30, 9.8, Sems	22
▲	10	1037346	(006330-)	Screw, Hex, M8 X 1.25 X 25, 9.8, Sems	4
▲	11	1047773	(006330-)	Seal, Top, Sbdc	1
▲	12	1054369	(006330-)	Seal, Top, Lh, Sbdc	1
▲	13	39277	(006330-)	Screw, Hex, M8 X 1.25 X 25, 8.8	2
▲	14	30013	(006330-)	Washer, Flat, 0.31, Fendr	6
▲	15	08709	(006330-)	Nut, Hex, M8 X 1.25	3
▲	16	1076258	(006330-)	Cover Wldt, Lh, Sbdc [S20]	1

Fig. 21 - Vacuum Wand Kit

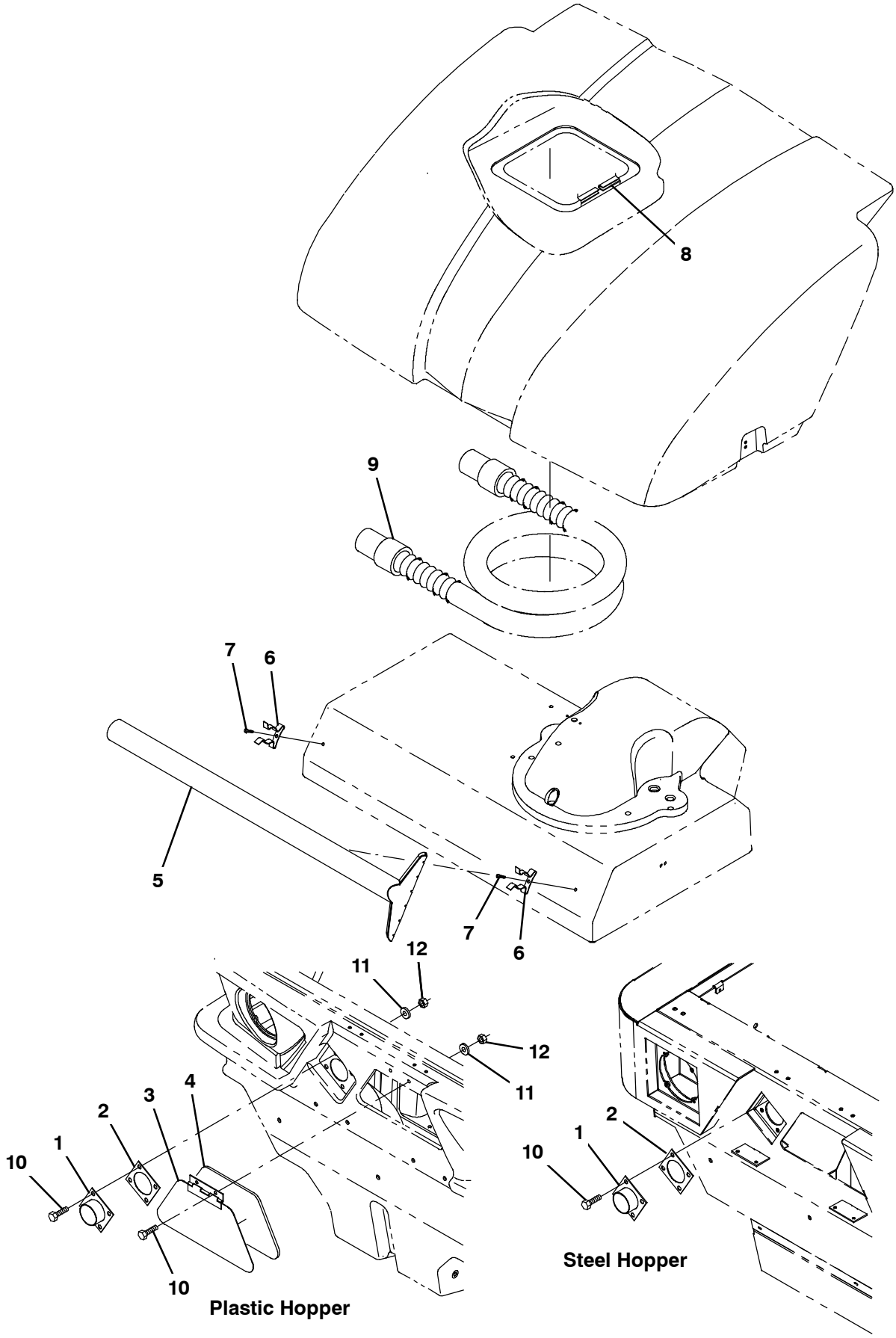

354972 - NA

Fig. 21 - Vacuum Wand Kit

	Ref.	Part No.	Serial Number	Description	Qty.
▽		9006023	(000000-)	Wand Kit, Vacuum, Ci [S20]	1
▲	1	1052620	(000000-)	Adapter Wldt, Wand, Vacuum	1
▲	2	55965	(000000-)	Seal, Rbr, 0.06, Tube, Vacuum Wand	1
▲	3	1047632	(000000-)	Door Wldt, Wand, Vacuum	1
▲	4	1047635	(000000-)	Gasket, Door, Wand, Vacuum	1
▲	5	9006909	(000000-)	Wand, Vacuum, W/ Label, Na [S20]	1
▲	5	9006911	(000000-)	Wand, Vacuum, W/ Label, JP [S20]	1
▲	6	67004	(000000-)	Clip, Grip, Finger, 1.00- 1.88d,White Vyl	2
▲	7	360973	(000000-)	Screw, Pan, 12- 16 X 0.50, F/ Plstc	2
▲	8	07887	(000000-)	Molding, Trim, Pvc, .08- .11 39.2l	1
▲	9	54009	(000000-)	Hose Assy, W/2cuff, 2.0d 120l 2.0/2.0	1
▲	10	08716	(000000-)	Screw, Hex, M6 X 1.00 X 20, Ss	6
▲	11	32490	(000000-)	Washer, Flat, 0.25, Std	6
▲	12	08708	(000000-)	Nut, Hex, Lock, M6 X 1.00, Nl	6

Fig. 22 - Fire Extinguisher Kit

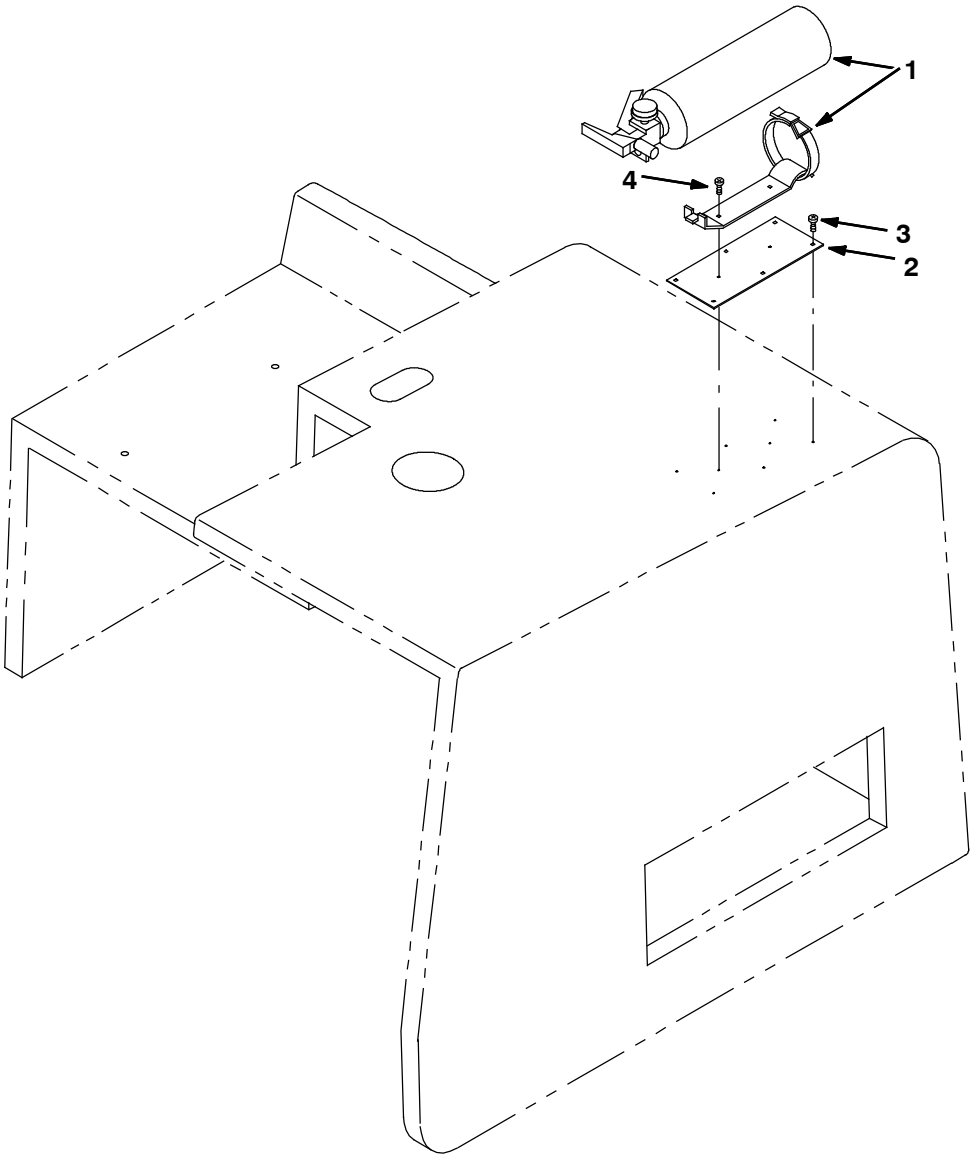

350035 - ALL

	Ref.	Part No.	Serial Number	Description	Qty.
▽		9006025	(000000-)	Extinguisher Kit, Fire, Ci [S20]	1
▲	1	25312	(000000-)	Extinguisher, Fire, 2.5 Lb Dry	1
▲	2	1052806	(000000-)	Plate, Mtg, Fire Extinguisher	1
▲	3	360973	(000000-)	Screw, Pan, 12- 16 X 0.50, F/ Plstc	6
▲	4	02863	(000000-)	Screw, Pan, Phl, 10- 16 X 0.75, Fmg/Ab	2

Fig. 23 - Soft Ride Non-Marking Tire and Wheel Assembly, Rear

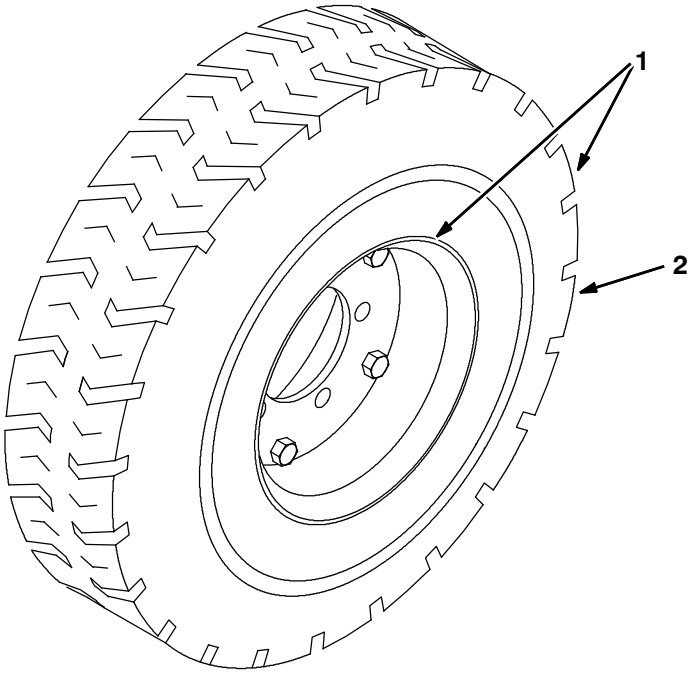

350173 - IC

	Ref.	Part No.	Serial Number	Description	Qty.
▽	1	360295	(000000-)	Tire and Wheel Assembly, Non-Marking Solid	1
▲	2	360163	(000000-)	Tire, 4.00X8-3.75 Sol. Non-Mark	1

Fig. 24 - Soft Ride Puncture Proof Tire and Wheel Assembly, Rear

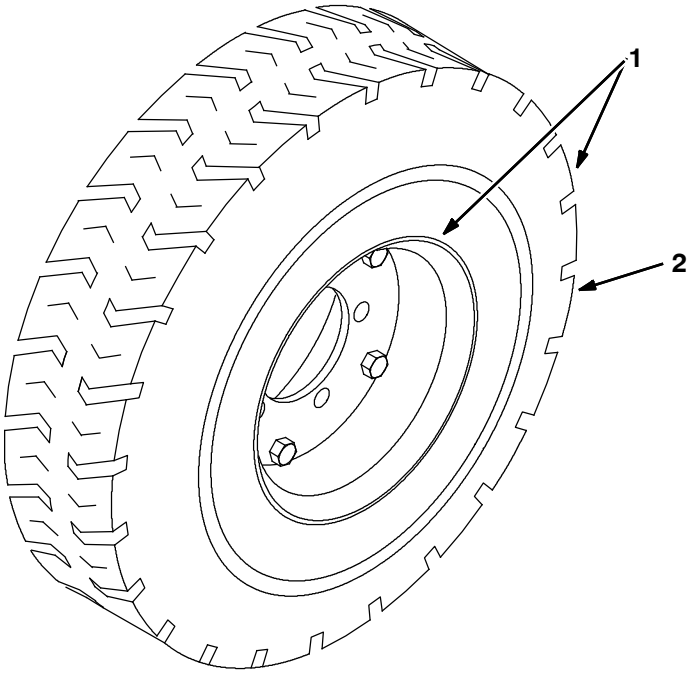

350173 - IC

	Ref.	Part No.	Serial Number	Description	Qty.
▽	1	360296	(000000-)	Tire and Wheel Assy 4.00- 8 Solid	1
▲	2	360162	(000000-)	Tire, 4.00X8- 3.75 Solid	1

Fig. 25 - Radial Tire and Wheel Assembly, Rear

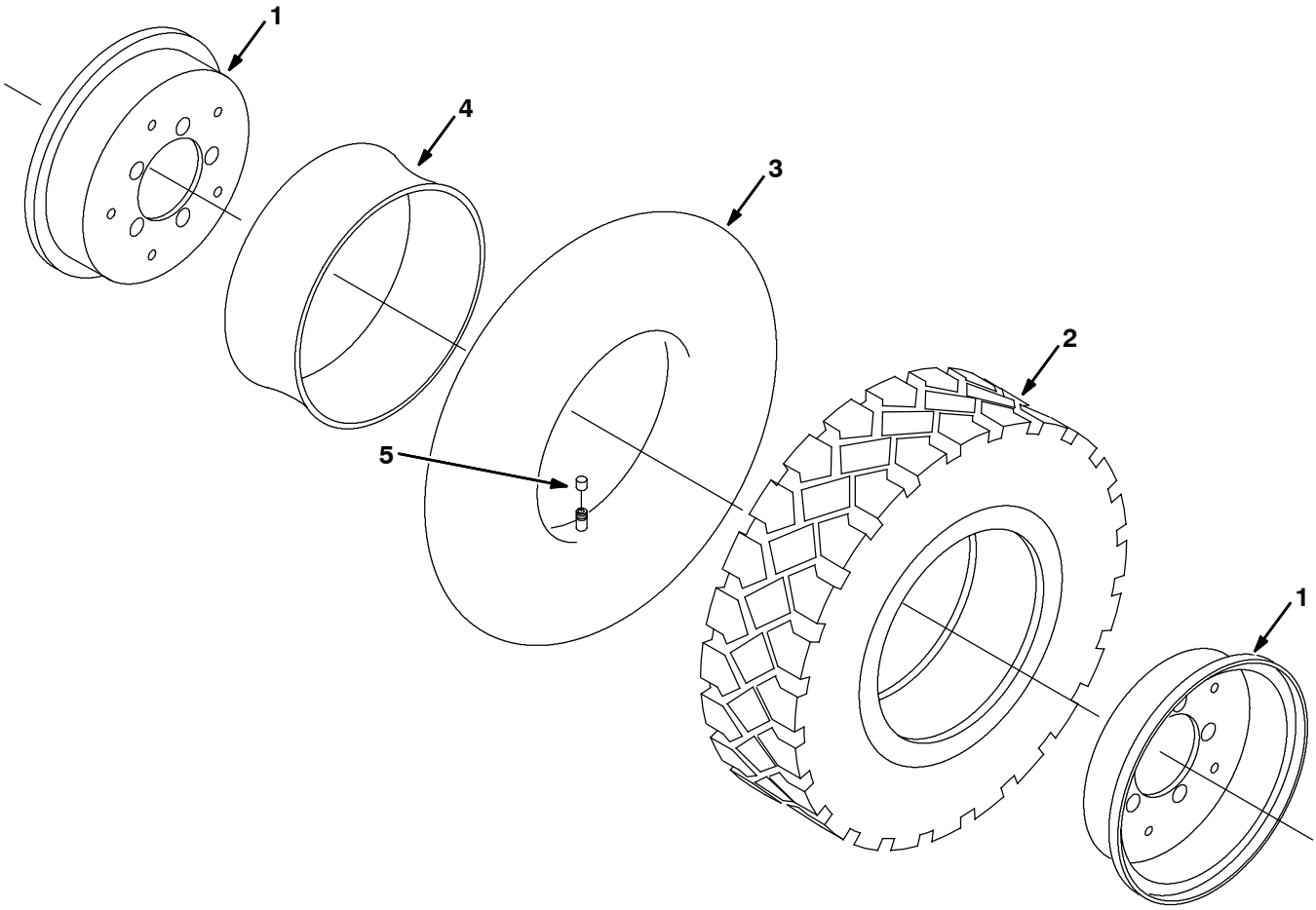

10932 - IC

	Ref.	Part No.	Serial Number	Description	Qty.
▽		361069	(000000-)	Tire and Wheel Assembly 16X6 RS Radial	1
▲	1	366104	(000000-)	Rim Assy, 08.0 X 4.3, 4.5bc /5bolt	1
▲▽		366093	(000000-)	Tire, Tube & Flap Assy	1
▲▲	2	360300	(000000-)	Tire, 150/75R8 Pneumatic	1
▲▲	3	361077	(000000-)	Tube, Tire- Inner 16X6- 8	1
▲▲	4	366092	(000000-)	Flap, Tire 2F 500	1
▲	5	45786	(000000-)	Cap, Valve Stem	1

Fig. 26 - Soft Ride Non-Marking Tire and Wheel Kit, Front

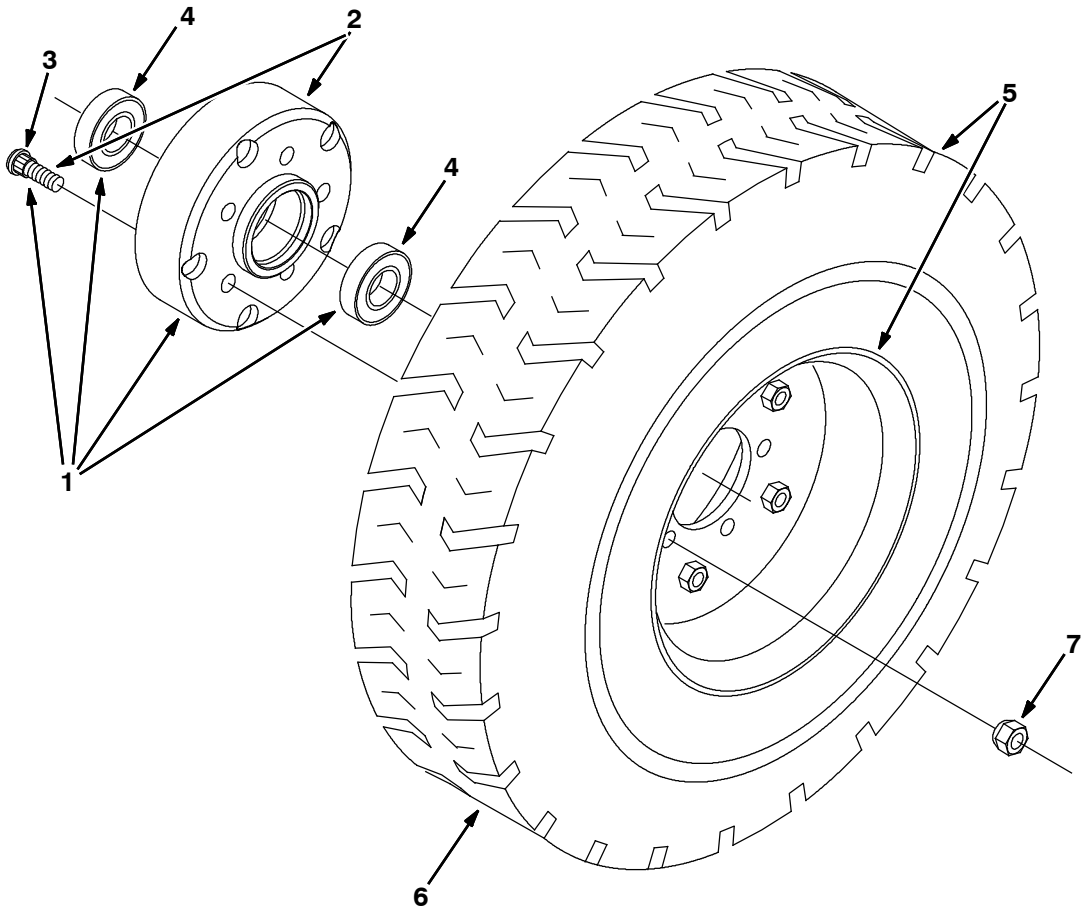

352043 - IC

	Ref.	Part No.	Serial Number	Description	Qty.
▽		366119	(000000-)	Wheel and Tire Kit, Non-Mark Solid, Front	1
▲▽	1	366107	(000000-)	Hub Assembly	2
▲▲	2	375001	(000000-)	Hub, Wheel w/studs	1
▲▲	3	32126	(000000-)	Stud, Wheel .50-20 X 1.50	5
▲▲	4	360074	(000000-)	Bearing, Ball, 1.18B 2.44D 0.6	2
▲▽	5	360295	(000000-)	Tire Assy, Solid, 04.0 X 3.8 4.5bc 5bolt	2
▲▲	6	360163	(000000-)	Tire, 4.00 X 8-3.75 Sol. Non-Mark	1
▲	7	24339	(000000-)	Nut-Wheel .50-20 60 Angle	10

Fig. 27 - Soft Ride Puncture Proof Tire and Wheel Kit, Front

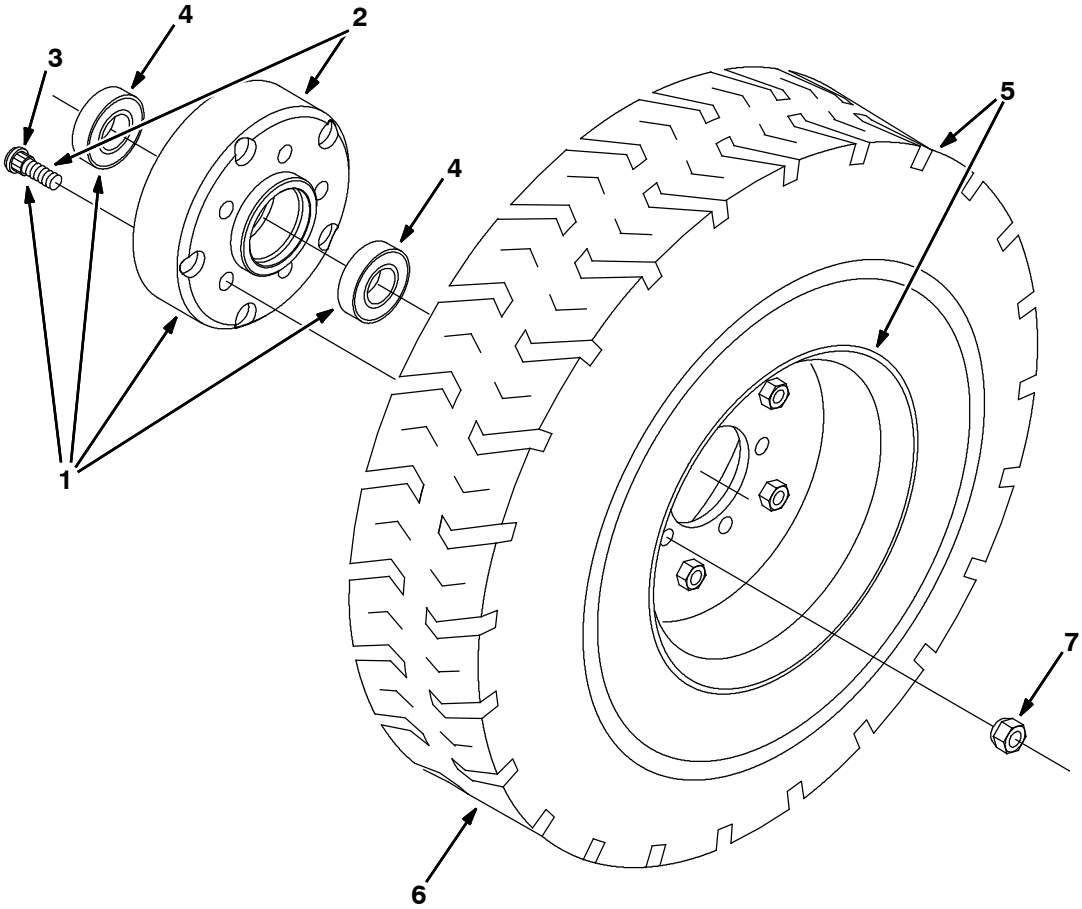

352043 - IC

	Ref.	Part No.	Serial Number	Description	Qty.
▽		366116	(000000-)	Wheel and Tire Kit, Soft Ride, Front	1
▲▽	1	366107	(000000-)	Hub Assembly	2
▲▲	2	375001	(000000-)	Hub, Wheel w/studs	1
▲▲	3	32126	(000000-)	Stud, Wheel .50- 20 X 1.50	5
▲▲	4	360074	(000000-)	Bearing, Ball, 1.18B 2.44D 0.6	2
▲▽	5	360296	(000000-)	Tire Assy, Solid, 04.0 X 3.8 4.5bc 5bolt	2
▲▲	6	360162	(000000-)	Tire, Solid, 4.0 X 8.0 X 3.8	1
▲	7	24339	(000000-)	Nut- Wheel .50- 20 60 Angle	1

Fig. 28 - Bias Tire and Wheel Kit, Front

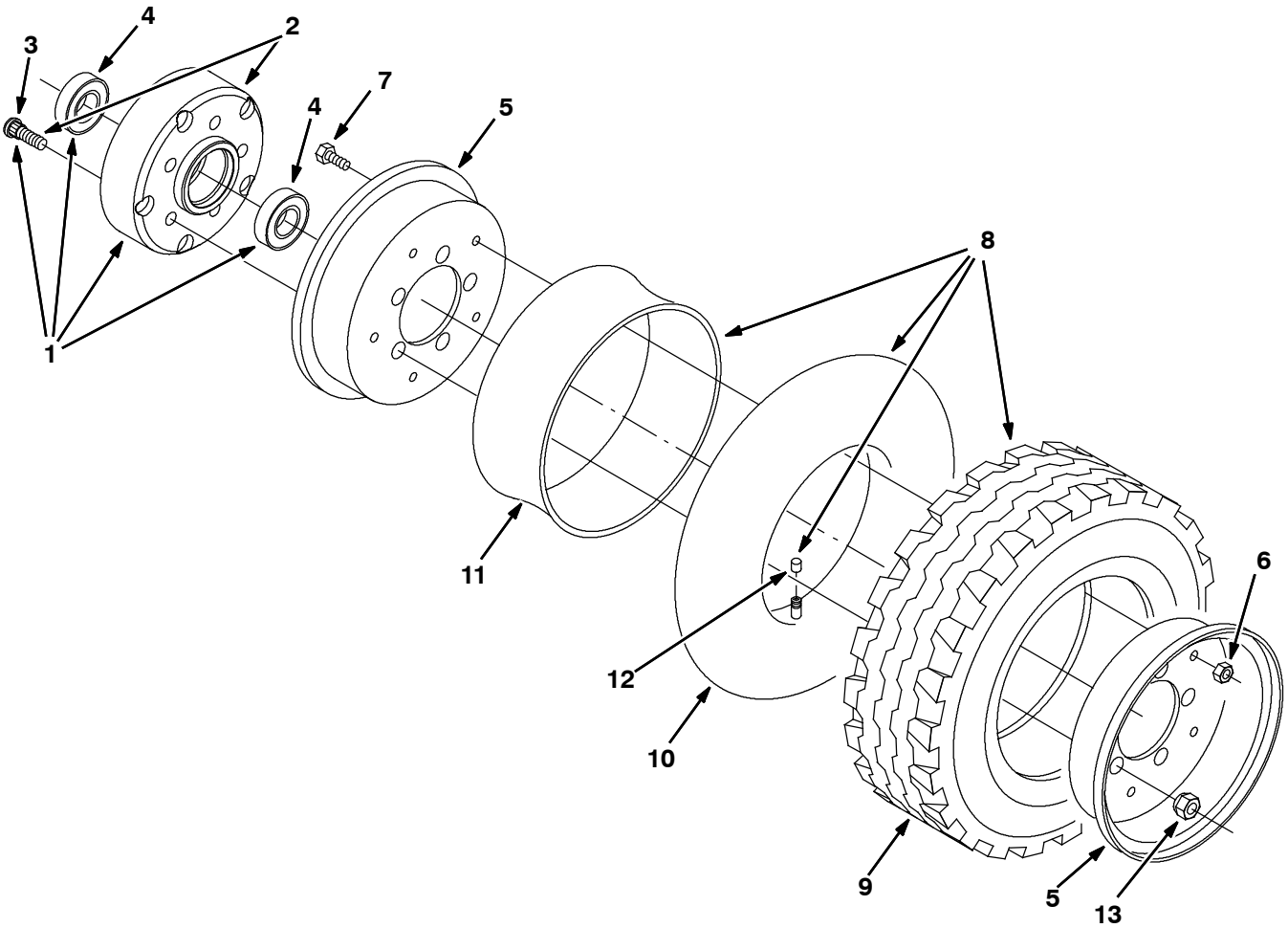

352047 - IC

	Ref.	Part No.	Serial Number	Description	Qty.
▽		366111	(000000-)	Wheel and Tire Kit, Bias Front	1
▲▽	1	366107	(000000-)	Hub Assembly	2
▲▲	2	375001	(000000-)	Hub, Wheel w/studs	1
▲▲	3	32126	(000000-)	Stud, Wheel .50- 20 X 1.50	5
▲▲	4	360074	(000000-)	Bearing, Ball, 1.18B 2.44D 0.6	2
▲▽		366113	(000000-)	Tire/wheel Assy, 16x6- 8 10pr	2
▲▲	5	366104	(000000-)	Rim Assy, 08.0 X 4.3, 4.5bc /5bolt	1
▲▲	6	08714	(000000-)	Nut, Hex, Lock, M10 X 1.5, Nl, Ss	5
▲▲	7	39283	(000000-)	Screw, Hex, M10 X 1.50 X 25, 8.8	5
▲▲	8	366094	(000000-)	Tire, Tube & Flap Assy	1
▲▲	9	361081	(000000-)	Tire	1
▲▲	10	361077	(000000-)	Tube, Tire- Inner 16X6- 8	1
▲▲	11	366092	(000000-)	Flap, Tire 2F 500	1
▲▲	12	45786	(000000-)	Cap, Valve Stem	1
▲	13	24339	(000000-)	Nut- Wheel .50- 20 60 Angle	10

Fig. 29 - Radial Tire and Wheel Kit, Front

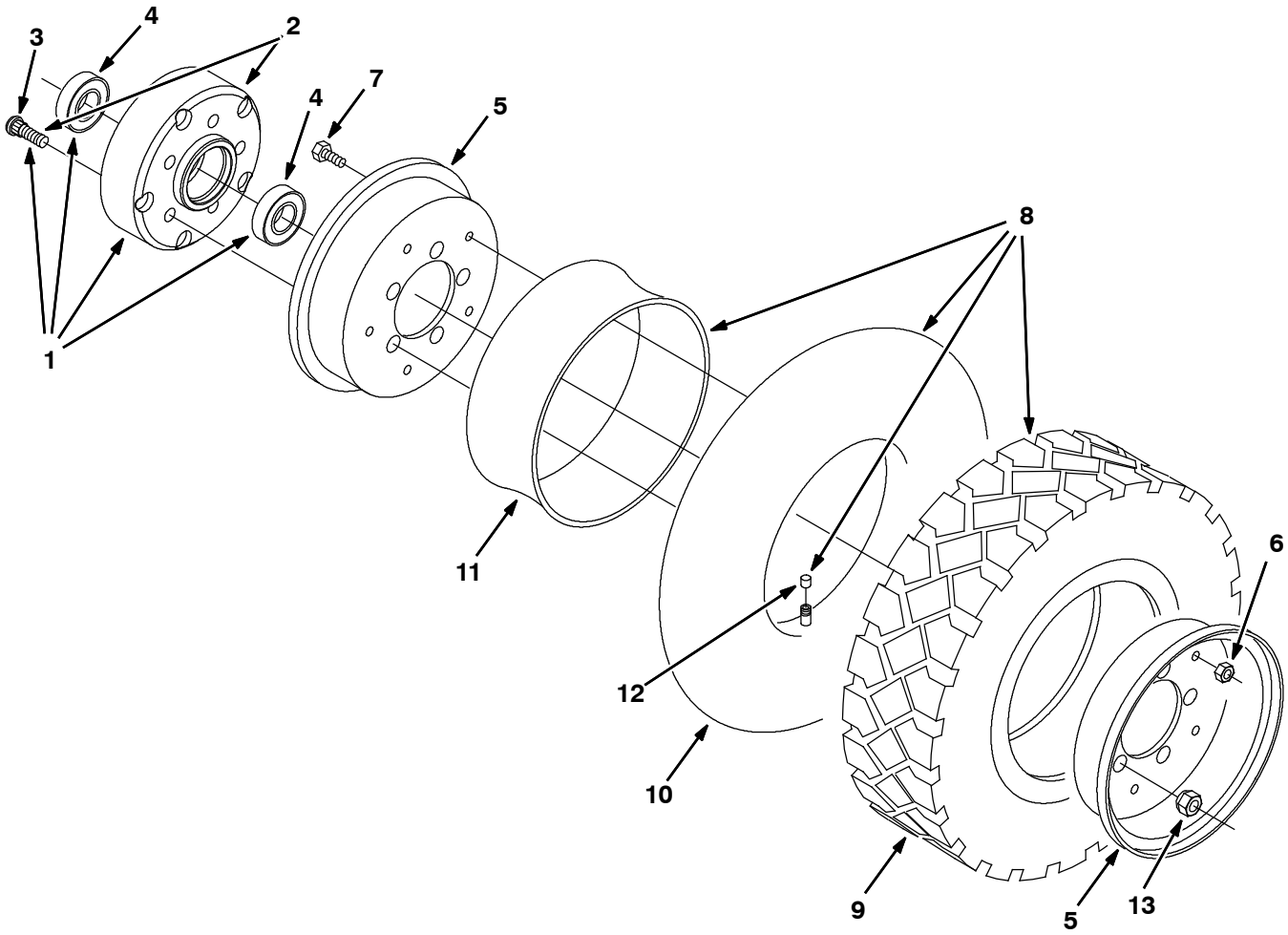

352049 - IC

	Ref.	Part No.	Serial Number	Description	Qty.
▽		366112	(000000-)	Wheel and Tire Kit, Radial Front	1
▲▽	1	366107	(000000-)	Hub Assembly	2
▲▲	2	375001	(000000-)	Hub, Wheel w/studs	1
▲▲	3	32126	(000000-)	Stud, Wheel .50- 20 X 1.50	5
▲▲	4	360074	(000000-)	Bearing, Ball, 1.18B 2.44D 0.6	2
▲▽		366114	(000000-)	Tire and Wheel Assembly, 16x6 RS Radial	2
▲▲	5	366104	(000000-)	Rim Assy, 08.0 X 4.3, 4.5bc /5bolt	1
▲▲	6	08714	(000000-)	Nut, Hex, Lock, M10 X 1.5, Nl, Ss	1
▲▲	7	39283	(000000-)	Screw, Hex, M10 X 1.50 X 25, 8.8	1
▲▲	8	366093	(000000-)	Tire, Tube & Flap Assy	1
▲▲	9	360300	(000000-)	Tire, 150/75R8 Pneumatic	1
▲▲	10	361077	(000000-)	Tube, Tire- Inner 16X6- 8	1
▲▲	11	366092	(000000-)	Flap, Tire 2F 500	1
▲▲	12	45786	(000000-)	Cap, Valve Stem	1
▲	13	24339	(000000-)	Nut- Wheel .50- 20 60 Angle	10

Fig. 30 - Telemetry Group

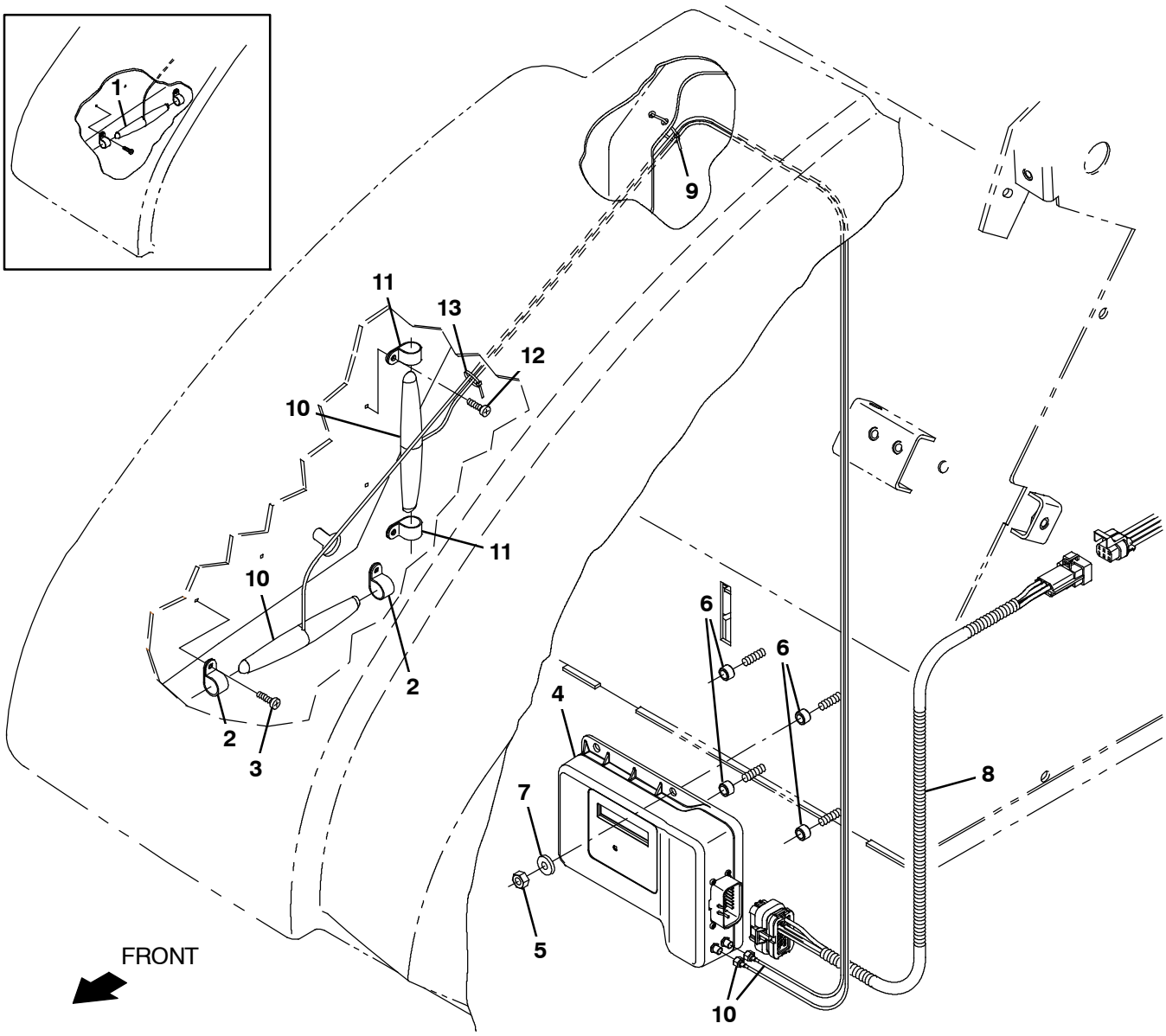

356274 - IC, NA

Fig. 30 - Telemetry Group

Ref.	Part No.	Serial Number	Description	Qty.
1	1070324	(000000- 007300)	Antenna, Telem, 110 In [Gprs]	1
2	140916	(000000-)	Clamp, Cable, Nyl, 0.62d, Nat	2
3	382320	(000000-)	Screw, Pan, Phl, 12- 16 X 0.50, F/ Plstc	2
4	9010085	(000000-)	Control Box Assy Kit, Replmt, Telem[Usa]	1
4	9010086	(000000-)	Control Box Assy Kit, Replmt, Telem[Intl]	1
5	08708	(000000-)	Nut, Hex, Lock, M6 X 1.00, Nl	4
6	222516	(000000-)	Sleeve, P/M, 0.32b 0.50d 0.3l [430ss]	4
7	32483	(000000-)	Washer, Flat, 0.25, Sae	4
8	1071132	(000000-)	Harness, Ele [Extn, Telemetry]	1
9	49266	(000000-)	Tie, Cable, Nyl, 07.3l .19w 1.8 Max D	1
10	1247568	(007301-)	Antenna, Telem [4g, 108”]	1
11	140916	(007301-)	Clamp, Cable, Nyl, 0.62d, Nat	2
12	382320	(007301-)	Screw, Pan, Phl, 12- 16 X 0.50, F/ Plstc	2
13	49266	(007301-)	Tie, Cable, Nyl, 07.3l .19w 1.8 Max D	2

Fig. 31 - Wet Side Brush Dust Control Water Tank Group

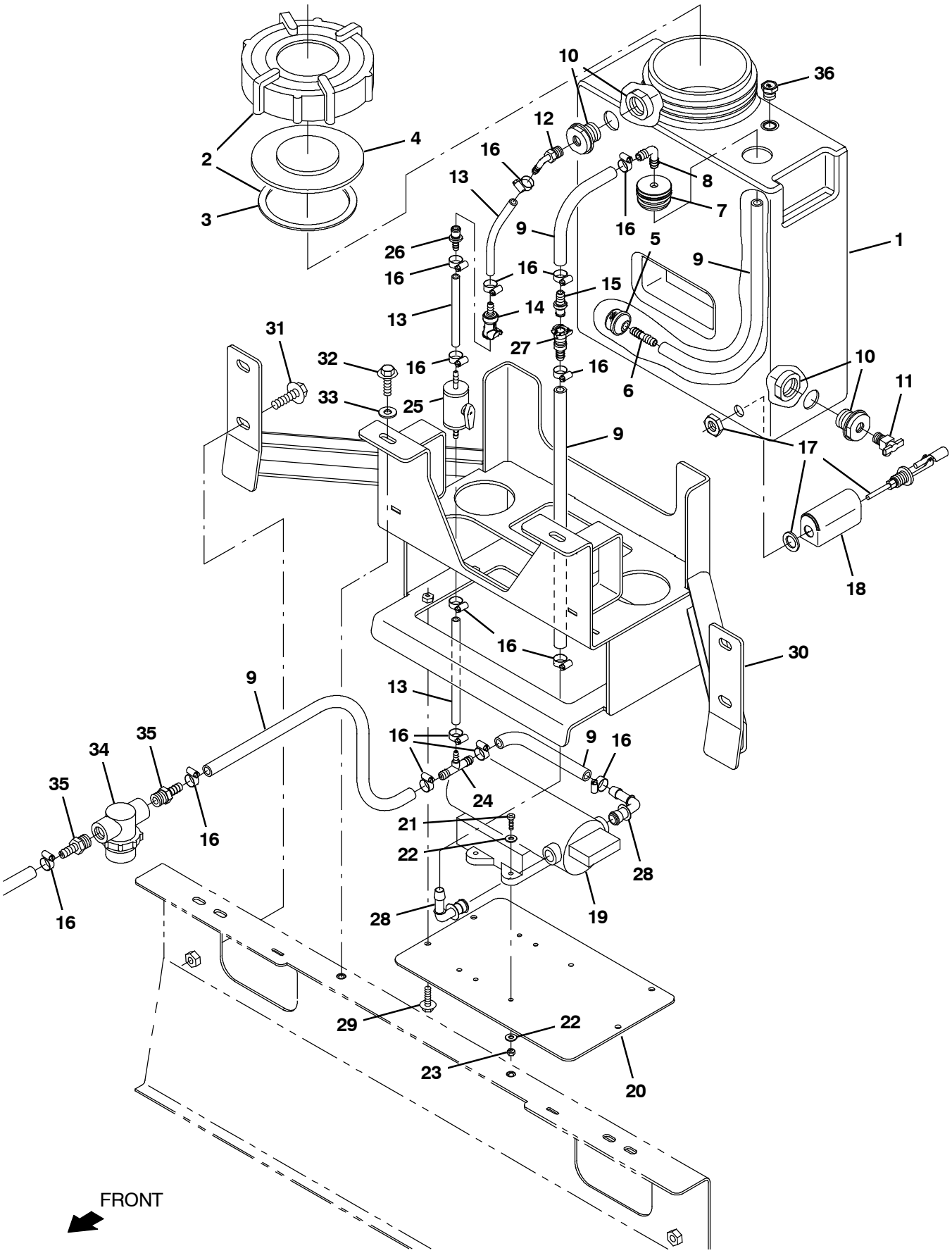

356788- IC, NA

NOTE: Watershield Kit, Rh, Sbdc, Tennant Part Number 9018178, includes; Fig. 31, Fig. 32, Fig. 33, Fig. 35, and Fig. 36.

NOTE: Watershield Kit, Dual, Sbdc, Tennant Part Number 9018180, includes; Fig. 31, Fig. 32, Fig. 34, Fig. 35, and Fig. 36.

Fig. 31 - Wet Side Brush Dust Control Water Tank Group

	Ref.	Part No.	Serial Number	Description	Qty.
	1	317260	(000000-)	Tank, Detgt, Trimmed [S20]	1
▽	2	24358	(000000-)	Cap Assy, Tank, Drain	1
▲	3	1031699	(000000-)	Gasket, .19, 4.05id 5.29od [Buna]	1
	4	86636	(000000-)	Plug, Cap, Nat	1
	5	20952	(000000-)	Screen, Pump	1
	6	20950	(000000-)	Fitting, Plstc, Str, Bm06/Bm06	1
	7	20944	(000000-)	Grommet, Pye, 0.37id, F/1.5h, .13 Matl	1
	8	20951	(000000-)	Fitting, Plstc, E90, Bm06/Bm06	1
	9	1014976	(000000-)	Hose, Afmkt, Pvc, Brd, 0.38id, 08ft, Clr	1
	10	1052026	(000000-)	Fitting, Plstc, Str, Pf04/Pf04, Bh	2
	11	51305	(000000-)	Fitting, Draincock, E90, .25npt	1
	12	1011170	(000000-)	Fitting, Plstc, E90, Bm04/Pm04, Nyl	1
	13	1006415	(000000-)	Hose, Afmkt, Pvc, Clr, 0.25id, 03ft	1
	14	1002898	(000000-)	Fitting, Plstc, Str, Bm04, Cplg,Fem[Tco]	1
	15	1203814	(000000-)	Fitting, Plstc, Str, Bm06, Cplg, Male	1
	16	43844	(000000-)	Clamp, Hose, Wormdrive, 0.25- 0.62d, .31w	15
	17	385685	(000000-)	Sensor, Level, Liq, 14vdc 01a .62- 11	1
	18	1019285	(000000-)	Bracket, Protector, Float Switch	1
	19	1036801	(000000-)	Pump, Soltn, 13.7vdc, 65psi [Fast Ii+]	1
	20	1232471	(000000-)	Plate, Pump Mtg	1
	21	06930	(000000-)	Screw, Pan, Phl, M4 X 0.70 X 30, 4.8	4
	22	19066	(000000-)	Washer, Flat, 0.25b 0.56d .05, Pl, 10	8
	23	33932	(000000-)	Nut, Hex, Lock, M4 X 0.70, Nl, Ss	4
	24	61456	(000000-)	Fitting, Plstc, Tee, Bm03/Bm06/Bm06, Br	1
	25	1232030	(000000-)	Valve, Shutoff, Bm04/Bm04, Pvc	1
	26	1204338	(000000-)	Fitting, Plstc, Str, Bm04, Cplg, Male	1
	27	1203454	(000000-)	Fitting, Plstc, Str, Bm06, Cplg, Fem	1
	28	1049259	(000000-)	Fitting, Nyl, Qdc, E90, Bm06/ Qm10	2
	29	1037345	(000000-)	Screw, Hex, M6 X 1.00 X 30, 9.8, Sems	4
	30	1232379	(000000-)	Bracket Wldt, Tank/Pump Sppt [S20]	1
	31	1037358	(000000-)	Screw, Hex, M10 X 1.50 X 35, 9.8, Sems	4
	32	1037346	(000000-)	Screw, Hex, M8 X 1.25 X 25, 9.8, Sems	2
	33	32491	(000000-)	Washer, Flat, 0.31, Std	2
▽	34	1076437	(000000-)	Filter, In- Line, Pf06/Pf06 60 Micron	1
▲		1076438	(000000-)	Screen, Fltr, 60 Micron, Caged Ss	1
	35	150538	(000000-)	Fitting, Plstc, Str, Bm06/Pm06	2
	36	1241776	(000000-)	Fitting, Brs, 3/8npt, Valve, Breather	1

Fig. 32 - Wet Side Brush Dust Control Water Tank Retainer Group

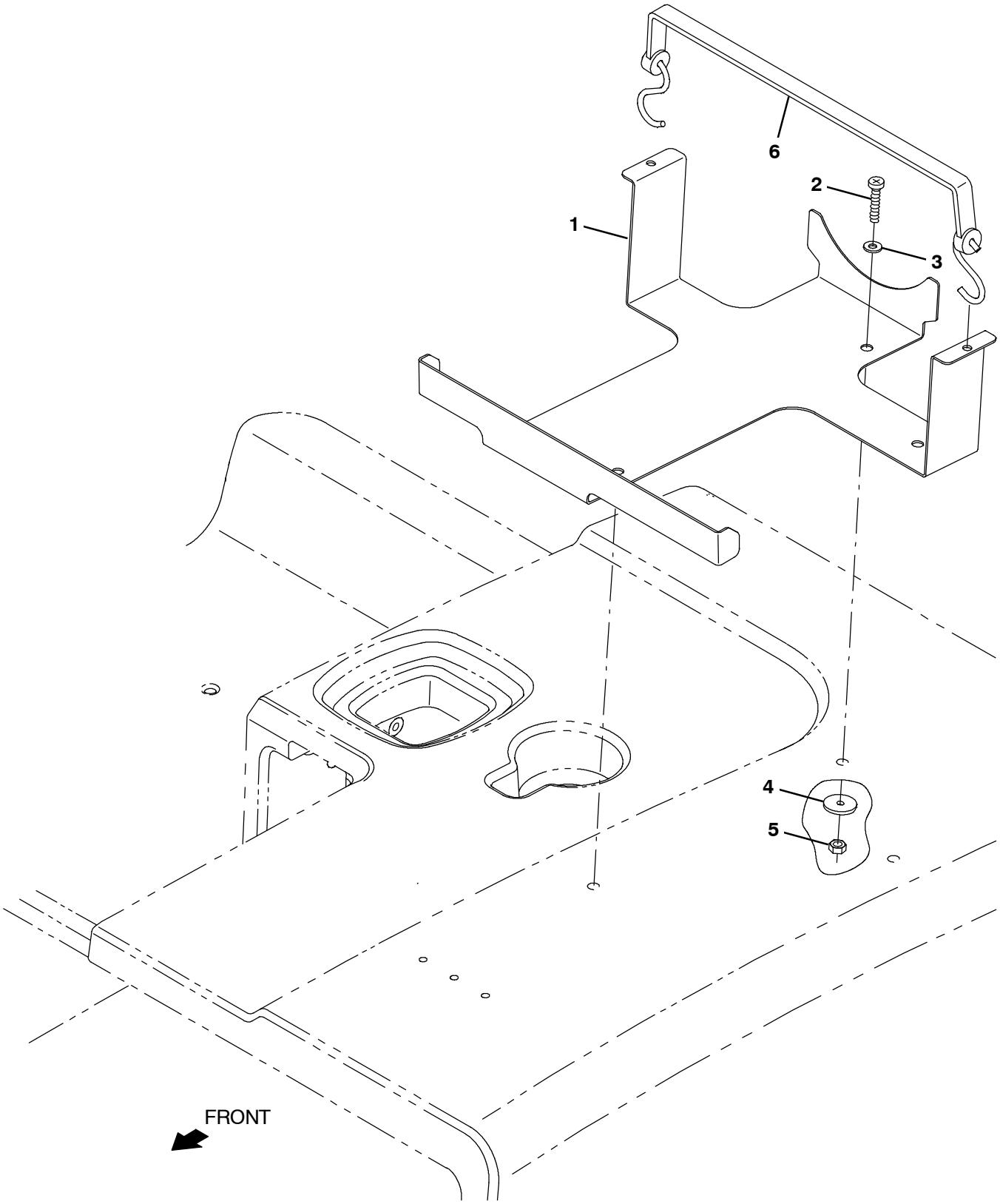

356793- NA

NOTE: Watershield Kit, Rh, Sbdc, Tennant Part Number 9018178, includes; Fig. 31, Fig. 32, Fig. 33, Fig. 35, and Fig. 36.

NOTE: Watershield Kit, Dual, Sbdc, Tennant Part Number 9018180, includes; Fig. 31, Fig. 32, Fig. 34, Fig. 35, and Fig. 36.

Fig. 32 - Wet Side Brush Dust Control Water Tank Retainer Group

Ref.	Part No.	Serial Number	Description	Qty.
1	1233457	(000000-)	Bracket, Tank Retainer	1
2	317232	(000000-)	Screw, Pan, Phl, M6 X 1.00 X 60, Zn	3
3	32483	(000000-)	Washer, Flat, 0.25, Sae	3
4	386063	(000000-)	Washer, Flat, 0.25b 1.12d .12, Ss	3
5	08708	(000000-)	Nut, Hex, Lock, M6 X 1.00, Nl	3
6	33671	(000000-)	Strap, Rbr, Tie- Down, 19.0l, 2/ Hook	1

Fig. 33 - Wet Right Hand Side Brush Dust Control Spray Nozzle Group

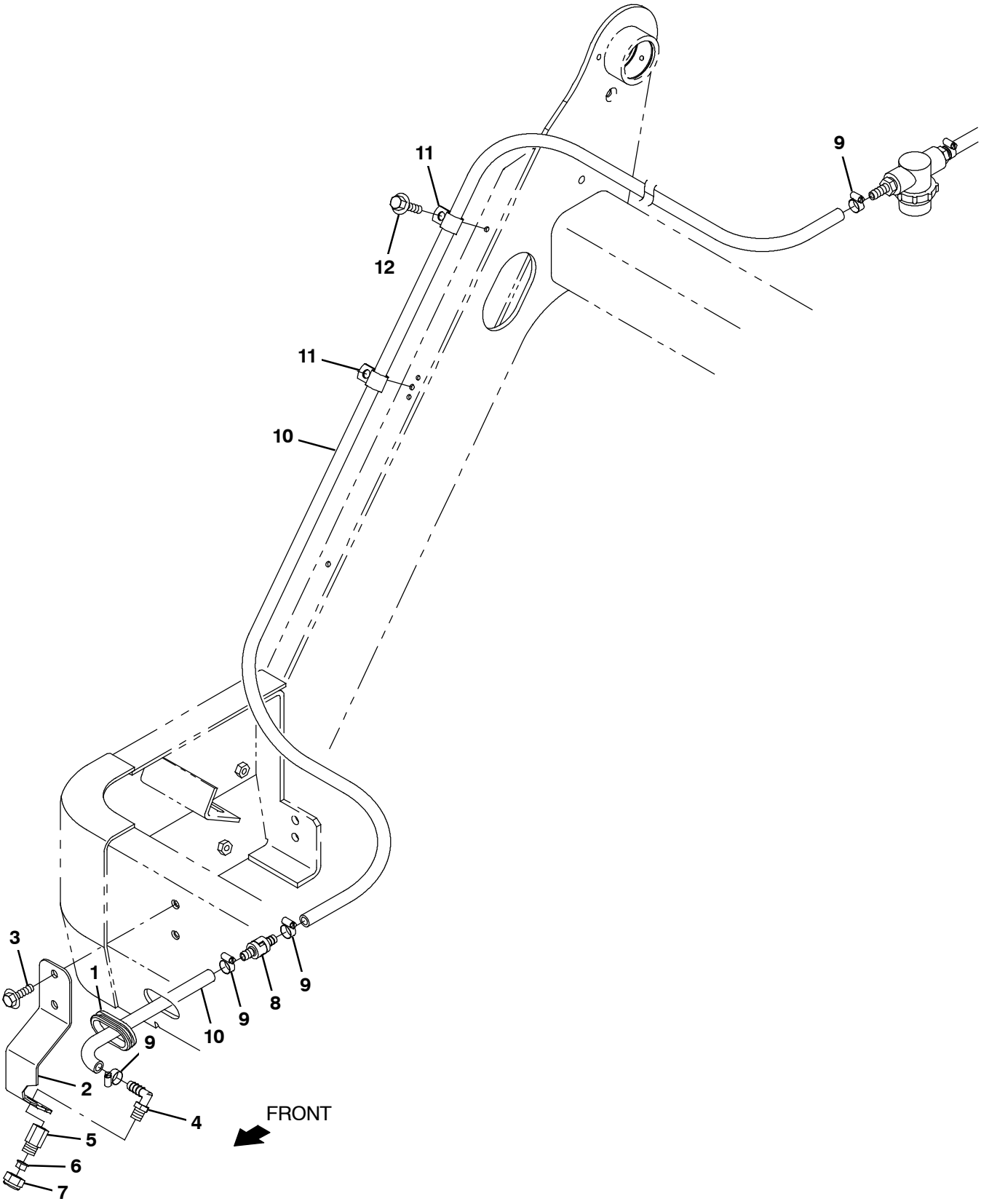

356789- NA

NOTE: Watershield Kit, Rh, Sbdc, Tennant Part Number 9018178, includes; Fig. 31, Fig. 32, Fig. 33, Fig. 35, and Fig. 36.

NOTE: Watershield Kit, Dual, Sbdc, Tennant Part Number 9018180, includes; Fig. 31, Fig. 32, Fig. 34, Fig. 35, and Fig. 36.

Fig. 33 - Wet Right Hand Side Brush Dust Control Spray Nozzle Group

Ref.	Part No.	Serial Number	Description	Qty.
1	10632- 13	(000000-)	Grommet, Rbr, 1.50id, F/1.8h, .19 Matl	1
2	1232473	(000000-)	Bracket, Mtg, Sgl Spray Nozzle [S20]	1
3	1037346	(000000-)	Screw, Hex, M8 X 1.25 X 25, 9.8, Sems	2
4	57248	(000000-)	Fitting, Plstc, E90, Bm06/Pm04, Nyl	1
5	1232066	(000000-)	Fitting, Body, Nozzel, Brs	1
6	1232065	(000000-)	Nozzel, Spray, 110 Deg, 0.05 Gpm	1
7	769778	(000000-)	Fitting, Cap, Brs	1
8	1015455	(000000-)	Valve, Check, 0005psi Bm06/Bm06	1
9	43844	(000000-)	Clamp, Hose, Wormdrive, 0.25- 0.62d, .31w	4
10	1014976	(000000-)	Hose, Afmkt, Pvc, Brd, 0.38id, 08ft, Clr	1
11	07471	(000000-)	Clamp, Cable, Stl, 0.75d X 0.75w, 1hole	2
12	763045	(000000-)	Screw, Hex, M8 X 1.25 X 20, Fmg	2

Fig. 34 - Wet Dual Side Brush Dust Control Spray Nozzle Group

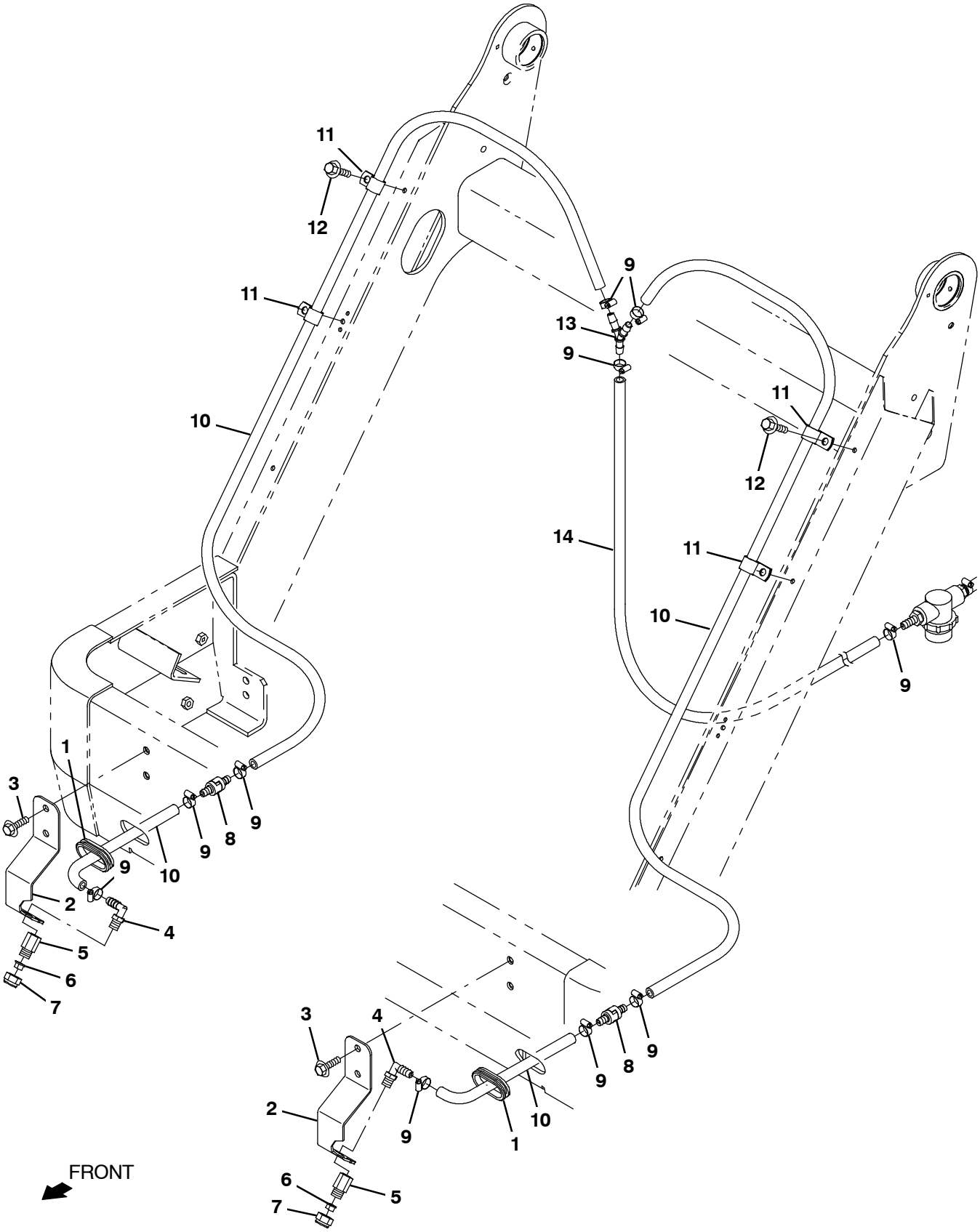

356790- NA

NOTE: Watershield Kit, Rh, Sbdc, Tennant Part Number 9018178, includes; Fig. 31, Fig. 32, Fig. 33, Fig. 35, and Fig. 36.

NOTE: Watershield Kit, Dual, Sbdc, Tennant Part Number 9018180, includes; Fig. 31, Fig. 32, Fig. 34, Fig. 35, and Fig. 36.

Fig. 34 - Wet Dual Side Brush Dust Control Spray Nozzle Group

Ref.	Part No.	Serial Number	Description	Qty.
1	10632- 13	(000000-)	Grommet, Rbr, 1.50id, F/1.8h, .19 Matl	1
2	1232473	(000000-)	Bracket, Mtg, Sgl Spray Nozzle [S20]	2
3	1037346	(000000-)	Screw, Hex, M8 X 1.25 X 25, 9.8, Sems	4
4	57248	(000000-)	Fitting, Plstc, E90, Bm06/Pm04, Nyl	2
5	1232066	(000000-)	Fitting, Body, Nozzel, Brs	2
6	1232065	(000000-)	Nozzel, Spray, 110 Deg, 0.05 Gpm	2
7	769778	(000000-)	Fitting, Cap, Brs	2
8	1015455	(000000-)	Valve, Check, 0005psi Bm06/Bm06	2
9	43844	(000000-)	Clamp, Hose, Wormdrive, 0.25- 0.62d, .31w	9
10	1014981	(000000-)	Hose, Afmkt, Pvc, Brd, 0.38id, 20ft, Clr	1
11	07471	(000000-)	Clamp, Cable, Stl, 0.75d X 0.75w, 1hole	4
12	763045	(000000-)	Screw, Hex, M8 X 1.25 X 20, Fmg	4
13	1017255	(000000-)	Fitting, Plstc, Y, Bm06/Bm06/Bm06, Nyl	1
14	1014976	(000000-)	Hose, Afmkt, Pvc, Brd, 0.38id, 08ft, Clr	1

Fig. 35 - Wet Side Brush Dust Control Electrical Group

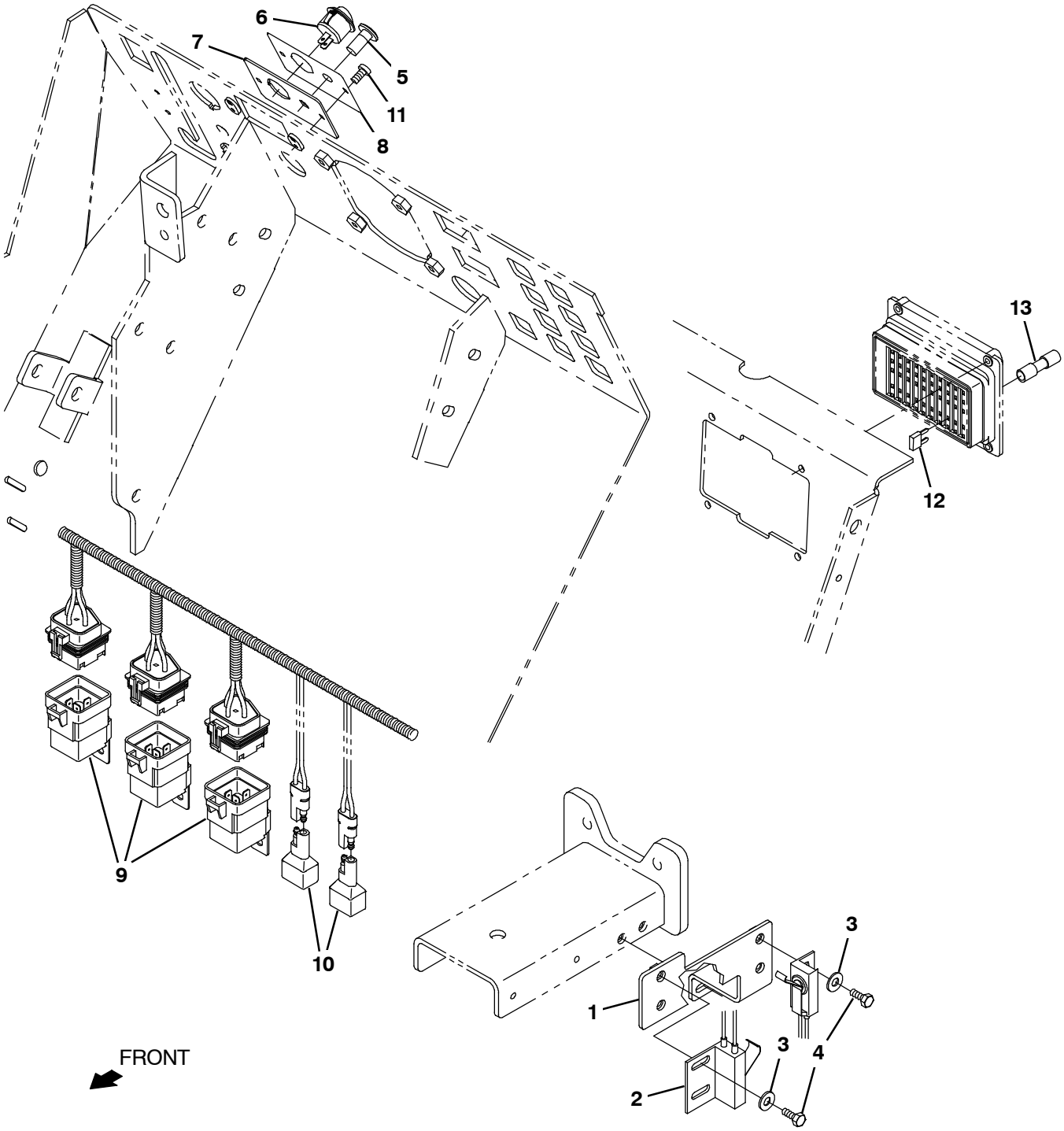

356791- IC, NA

NOTE: Watershield Kit, Rh, Sbdc, Tennant Part Number 9018178, includes; Fig. 31, Fig. 32, Fig. 33, Fig. 35, and Fig. 36.

NOTE: Watershield Kit, Dual, Sbdc, Tennant Part Number 9018180, includes; Fig. 31, Fig. 32, Fig. 34, Fig. 35, and Fig. 36.

Fig. 35 - Wet Side Brush Dust Control Electrical Group

Ref.	Part No.	Serial Number	Description	Qty.
1	1232737	(000000-)	Bracket Wldt, Switch, Fwd / Rev [S20]	1
2	770176	(000000-)	Switch, Snap, 15a No	1
3	12312	(000000-)	Screw, Hex, M5 X 0.80 X 12, 8.8	4
4	19066	(000000-)	Washer, Flat, 0.25b 0.56d .05, Pl, 10	4
5	1232342	(000000-)	Light, Led, .312d, 12 Vdc [Tri- Color]	1
6	1233938	(000000-)	Switch, Rocker, Spst, Round	1
7	1232484	(000000-)	Plate, Switch / Light Mtg	1
8	1233799	(000000-)	Label, Watershield [S20]	1
9	56186	(000000-)	Relay, 12vdc, 040a, Spdt No	3
10	222290	(000000-)	Diode, Ele, Plug	2
11	1069315	(000000-)	Screw, Pan, Phl, M4 X 0.70 X 10, Blk	2
12	1030985	(000000-)	Fuse, Blade, 015a, 32vdc [Mini]	1
13	1075953	(000000-)	Connector, Butt, Sealed[14- 16awg]	1

Fig. 36 - Wet Side Brush Dust Control Wire Harness Group

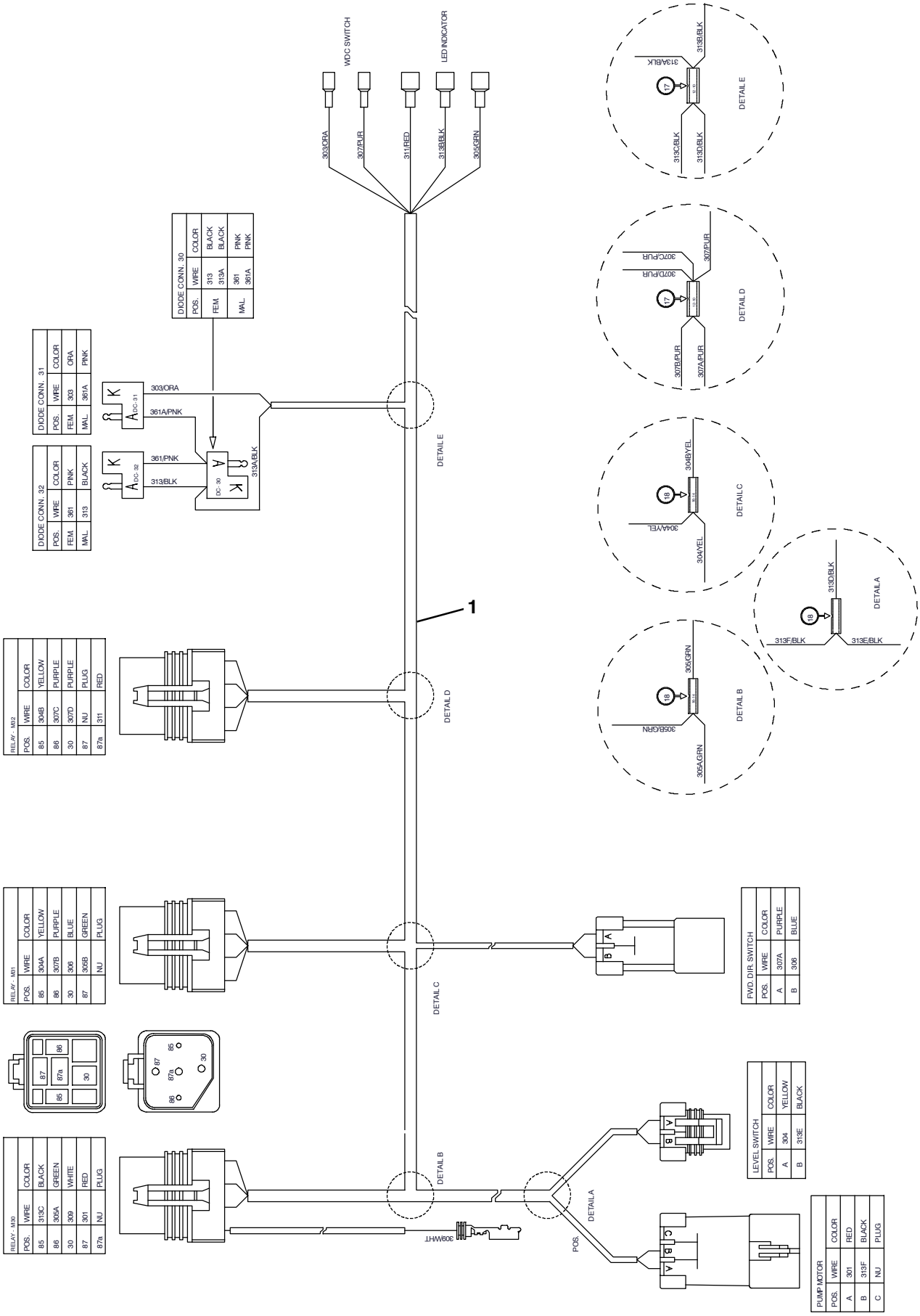

356792- NA

NOTE: Watershield Kit, Rh, Sbdc, Tennant Part Number 9018178, includes; Fig. 31, Fig. 32, Fig. 33, Fig. 35, and Fig. 36.

NOTE: Watershield Kit, Dual, Sbdc, Tennant Part Number 9018180, includes; Fig. 31, Fig. 32, Fig. 34, Fig. 35, and Fig. 36.

Fig. 36 - Wet Side Brush Dust Control Wire Harness Group

Ref.	Part No.	Serial Number	Description	Qty.
1	1234106	(000000-)	Harness, Cntrl, Wet Dust [S20ic]	1

Fig. 37 - HEPA Filter Hopper Cover Group

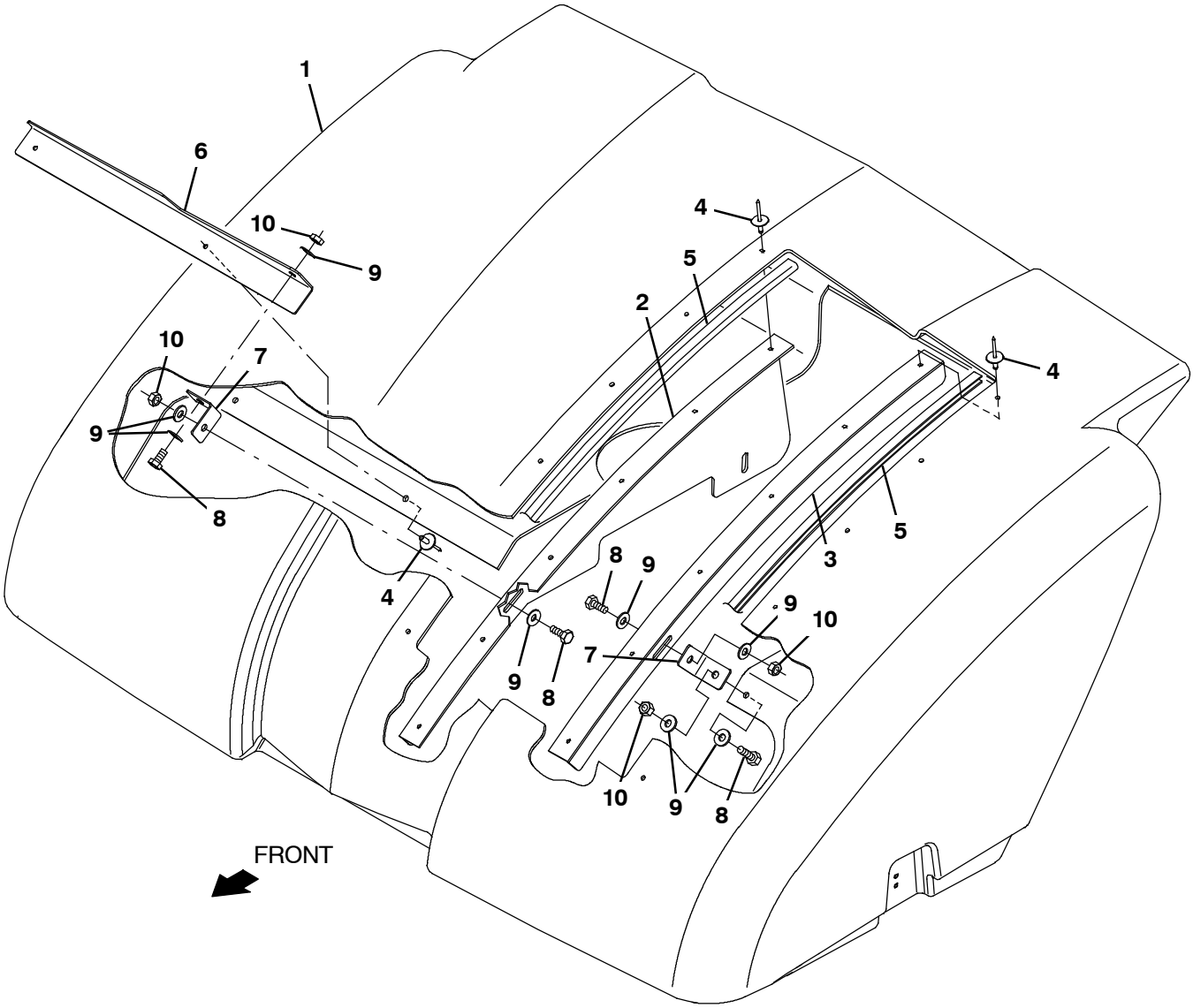

356804 - NA

Fig. 37 - HEPA Filter Hopper Cover Group

Ref.	Part No.	Serial Number	Description	Qty.
1	1076382	(000000-)	Cover, Hppr, Re- Work [S20]	1
2	1076384	(000000-)	Hood, Stiffener Wldt Rh [S20]	1
3	1076354	(000000-)	Hood, Stiffener Wldt Lh [S20]	1
4	68567	(000000-)	Rivet, Blind, .187d X 0.53 X .62d, Alm	1
5	1046410	(000000-)	Molding, Afmkt, Trim, Pvc, .18 .31, 20ft	1
6	1076355	(000000-)	Bar, Sppt, Hppr Cover [S20]	1
7	1076356	(000000-)	Bracket, Stiffener [S20]	1
8	06943	(000000-)	Screw, Hex, M6 X 1.00 X 20, 8.8	4
9	32483	(000000-)	Washer, Flat, 0.25, Sae	8
10	08708	(000000-)	Nut, Hex, Lock, M6 X 1.00, Nl	4

Fig. 38 - HEPA Filter Box Group

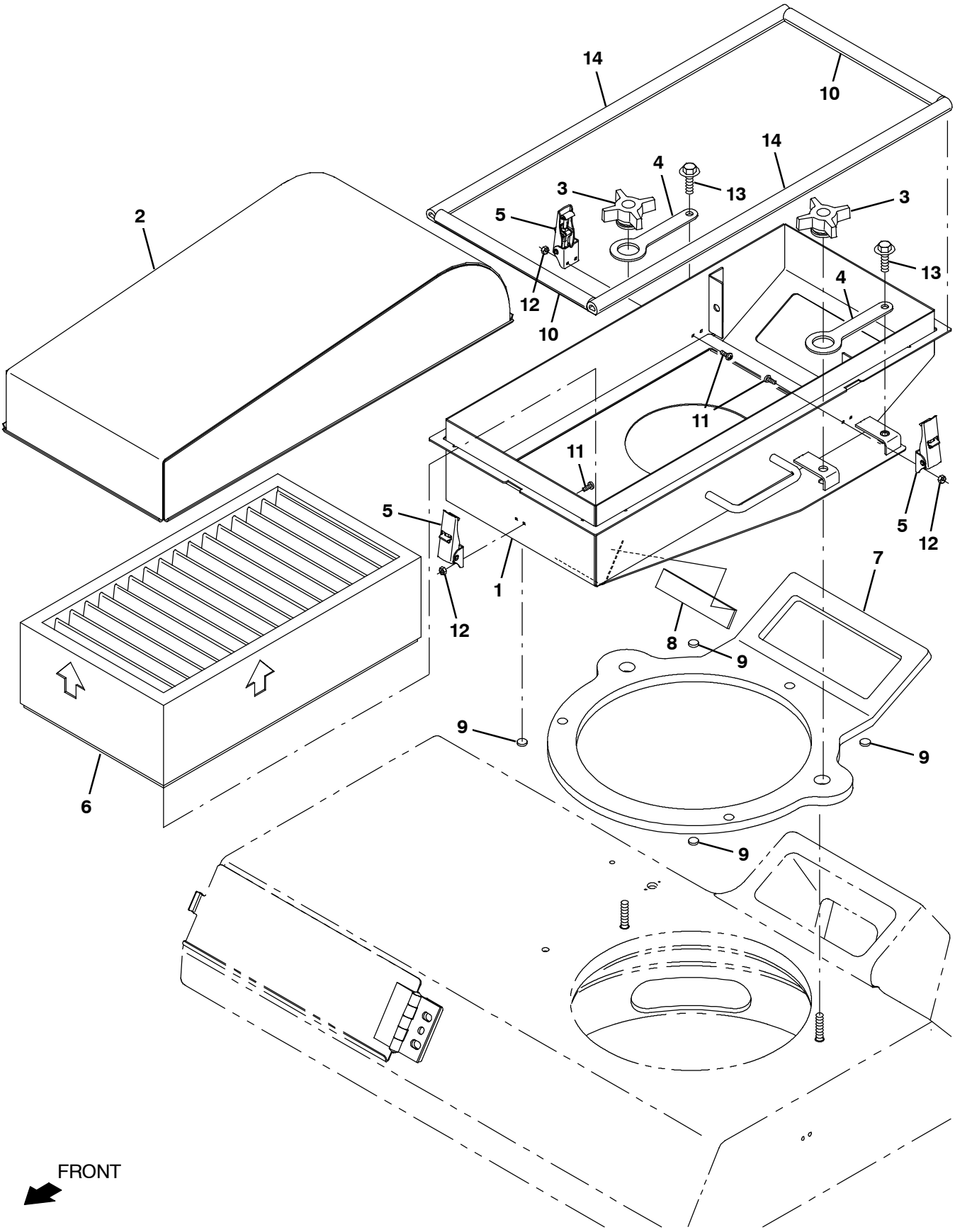

356803 - NA

Fig. 38 - HEPA Filter Box Group

Ref.	Part No.	Serial Number	Description	Qty.
1	1076253	(000000-)	Filter Box Wldt, Hepa, Lower [S20]	1
2	1076249	(000000-)	Hepa Airbox, Upper [S20]	1
3	1048335	(000000-)	Knob, Star, 2.75d 4ear 1.1l M8x1.25	2
4	1048353	(000000-)	Strap, Rbr	2
5	384418	(000000-)	Latch, Door [Southco 91- 562- 07]	3
6	1076004	(000000-)	Element, Fltr, Hepa, 10 X 18 X 4.87 S20	1
7	1044356	(000000-)	Gasket, Cover	1
8	764139	(000000-)	Strip, Rbr, Short	1
9	64757	(000000-)	Bumper, Rbr, Adh, 0.50d 0.14th	4
10	1246677	(000000-)	Seal, Afmkt, Bulb, Str, 0.50h .50w 1ft	2
11	49697	(000000-)	Screw, Pan, Phl, M4 X 0.70 X 10, Ss	6
12	33932	(000000-)	Nut, Hex, Lock, M4 X 0.70, Nl, Ss	6
13	1037346	(000000-)	Screw, Hex, M8 X 1.25 X 25, 9.8, Sems	2
14	1246678	(000000-)	Seal, Afmkt, Bulb, Str, 0.50h .50w 3ft	2

Fig. 39 - Spotlight Group, Blue

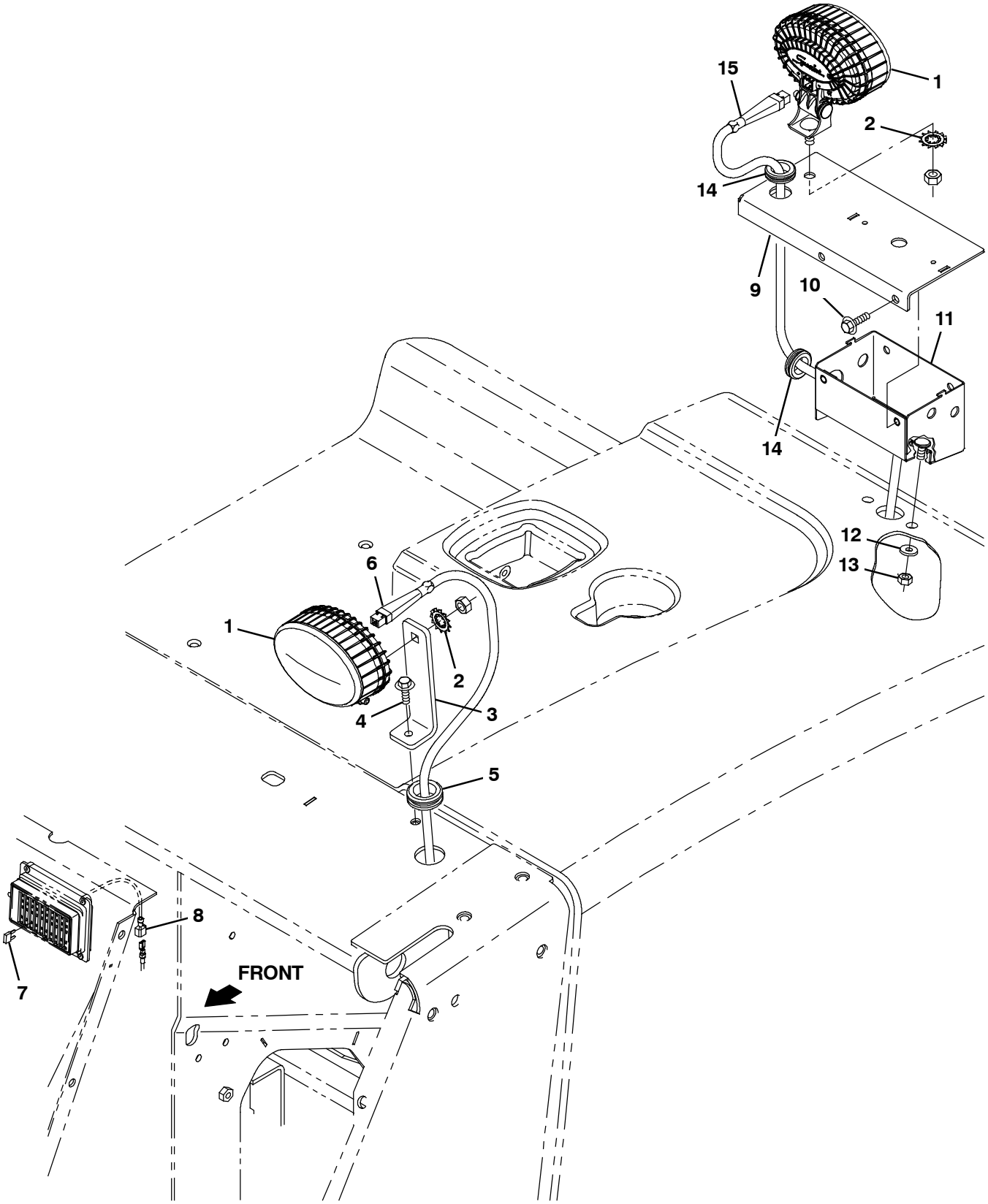

357137 - IC

Fig. 39 - Spotlight Kit, Blue

	Ref.	Part No.	Serial Number	Description	Qty.
▽		9020918	(000000-)	Spotlight, Blue, Ci [S20]	1
▲	1	1240687	(000000-)	Light, Spot, Blue, Led	2
▲	2	41143	(000000-)	Washer, Lock, Int- Ext, 0.50	1
▲	3	1076786	(000000-)	Brkt, Blu Spotlight, Fr, Frame Mtg	1
▲	4	1037354	(000000-)	Screw, Hex, M8 X 1.25 X 30, 9.8, Sems	1
▲	5	10632- 1	(000000-)	Grommet, Rbr, 1.06id, F/1.4h, .19 Matl	2
▲	6	1076772	(000000-)	Harness, Blu Spotlight [S20]	1
▲	7	1049734	(000000-)	Fuse, Blade, 005a, 32vdc [Mini]	1
▲	8	130096	(000000-)	Connector, Blade, Mal, 0.25, 1 Terminal	1
▲	9	1252057	(000000-)	Brkt, Blu Spotlight, Rr, Frame Mtg	1
▲	10	1020341	(000000-)	Screw, Hex, M8 X 1.25 X 20, Ss, Sems	2
▲	11	1049554	(000000-)	Angle, Mtg, Alarm	1
▲	12	32491	(000000-)	Washer, Flat, 0.31, Std	2
▲	13	08709	(000000-)	Nut, Hex, Lock, M8 X 1.25, Nl	2
▲	14	10632	(000000-)	Grommet, Rbr, 0.89id, F/1.2h, .14 Matl	2
▲	15	1256657	(000000-)	Harness, Blu Spotlight [S20]	1
▲		763114	(000000-)	Tie, Cable, 11.3l, 2.75d Max	10

Fig. 40 - Spotlight Wire Harnesses Group

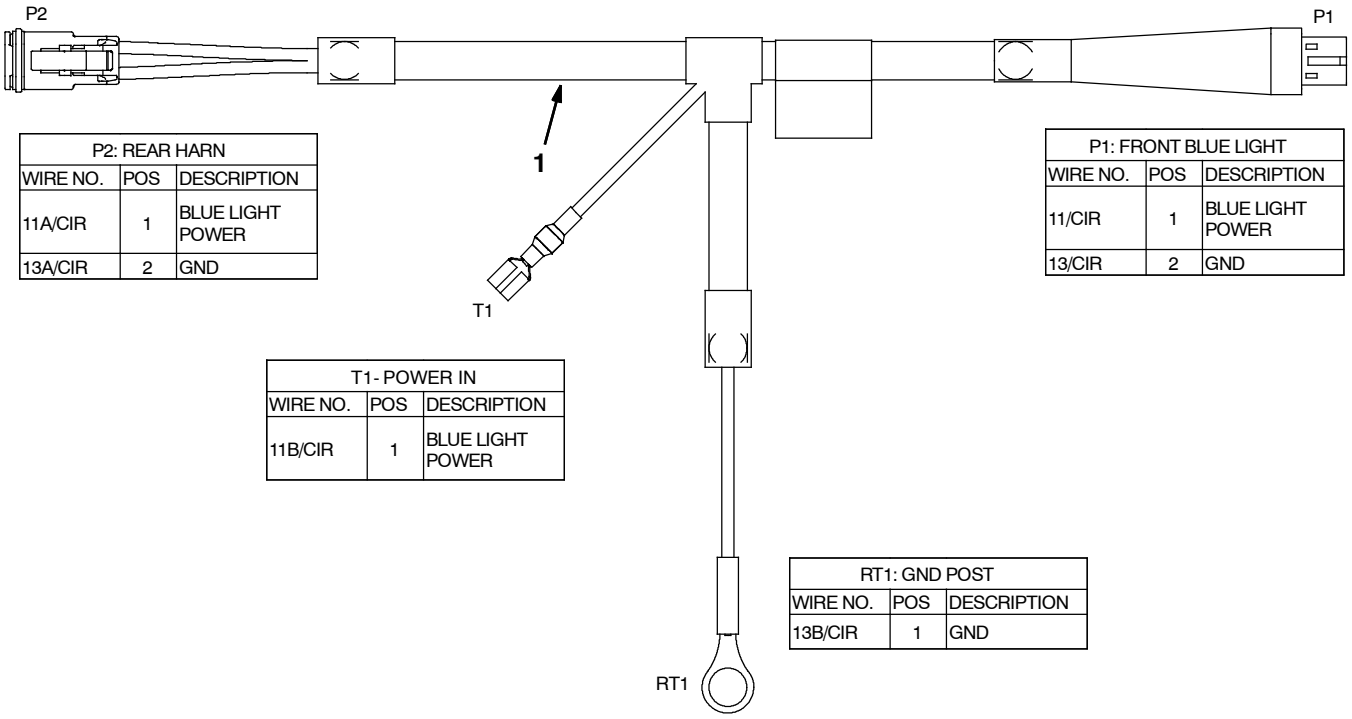

P2: REAR HARN		
WIRE NO.	POS	DESCRIPTION
11A/CIR	1	BLUE LIGHT POWER
13A/CIR	2	GND

P1: FRONT BLUE LIGHT		
WIRE NO.	POS	DESCRIPTION
11/CIR	1	BLUE LIGHT POWER
13/CIR	2	GND

T1- POWER IN		
WIRE NO.	POS	DESCRIPTION
11B/CIR	1	BLUE LIGHT POWER

RT1: GND POST		
WIRE NO.	POS	DESCRIPTION
13B/CIR	1	GND

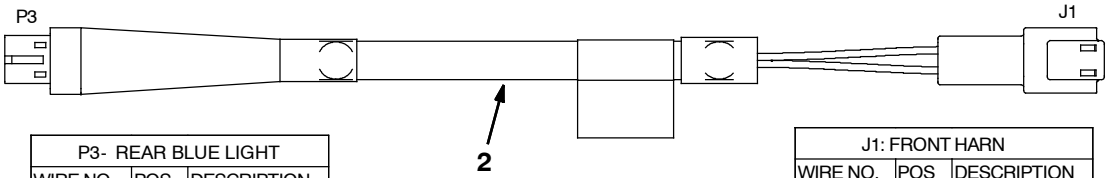

P3- REAR BLUE LIGHT		
WIRE NO.	POS	DESCRIPTION
11C/SQU	1	BLUE LIGHT POWER
13C/SQU	2	GND

J1: FRONT HARN		
WIRE NO.	POS	DESCRIPTION
11C/CIR	1	BLUE LIGHT POWER
13C/CIR	2	GND

357138

Ref.	Part No.	Serial Number	Description	Qty.
1	1076772	(000000-)	Harness, Blu Spotlight [S20]	1
2	1256657	(000000-)	Harness, Blu Spotlight [S20]	1

Fig. 41 - Weather Proof Pouch Group

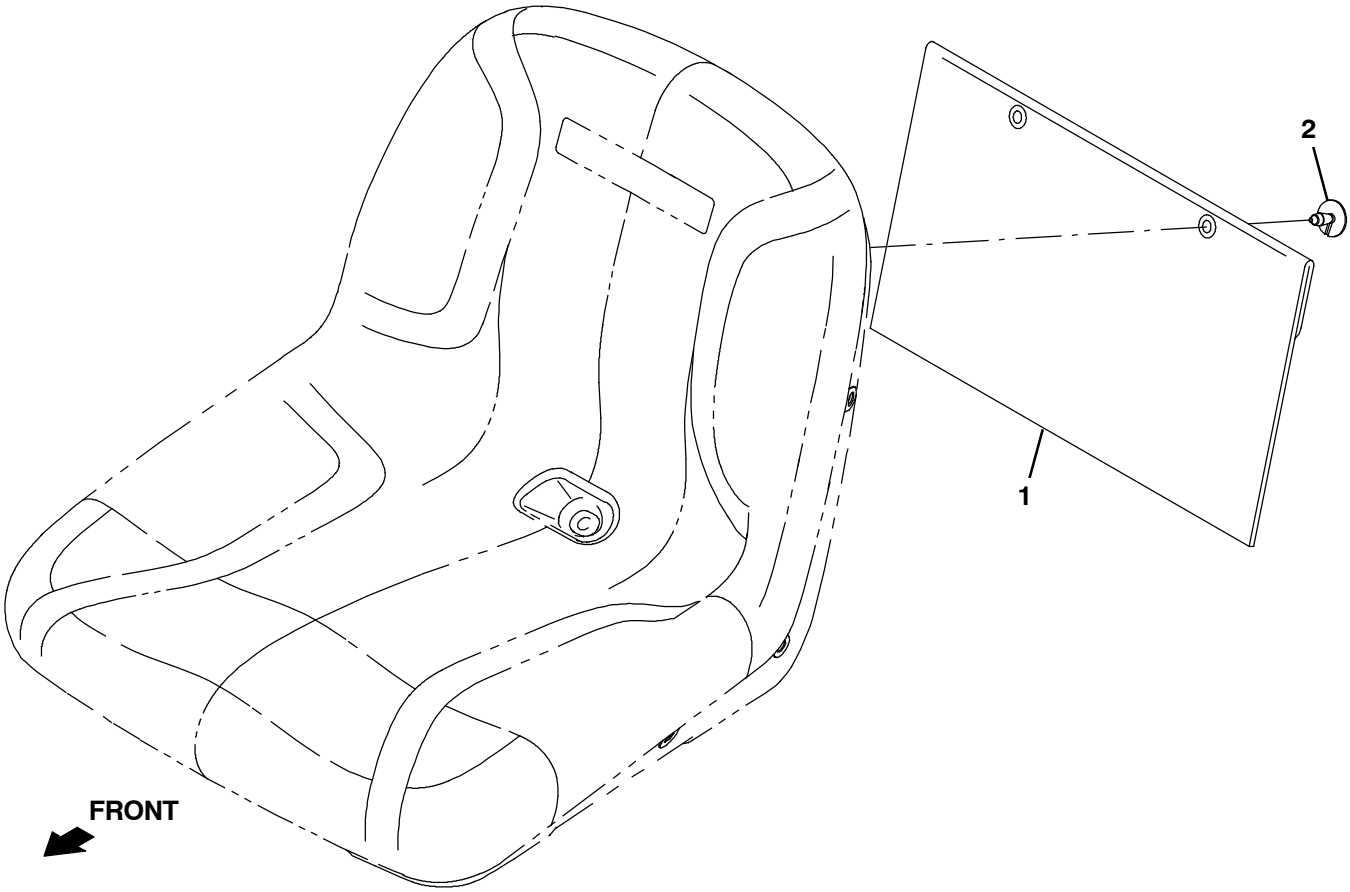

357134

	Ref.	Part No.	Serial Number	Description	Qty.
▽		9020593	(000000-)	Pouch, Manual, Weather Proof	1
▲	1	68275	(000000-)	Pouch	1
▲	2	72968	(000000-)	Rivet, Plstc, .250d X 0.90	2

Fig. 42 - Tow Hook Kit (007663-)

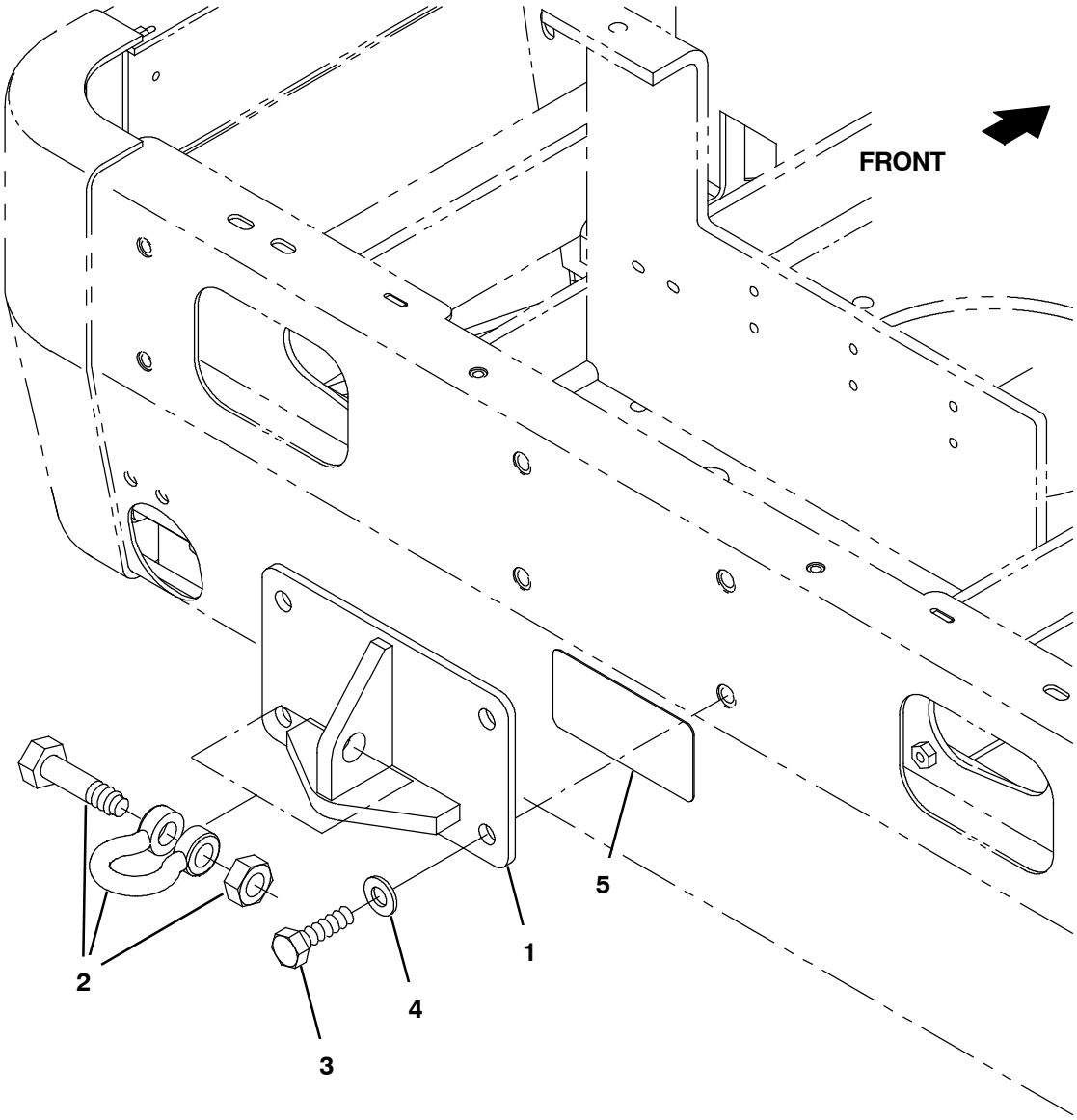

357135

	Ref.	Part No.	Serial Number	Description	Qty.
▽		9021038	(007663-)	Frame Kit, Hook, Winch	1
▲	1	1076795	(007663-)	Plate Wldt, Winch Hook	1
▲	2	1076741	(007663-)	Anchor [Shackle], .625 Thick	1
▲	3	06968	(007663-)	Screw, Hex, M12 X 1.75 X 35, 8.8	4
▲	4	32486	(007663-)	Washer, Flat, 0.53b 1.06d .10, Stl, Pl	4
▲	5	1251735	(007663-)	Label, Hook, Winch	1

Fig. 43 - Documentation Group

D, NA

Ref.	Part No.	Serial Number	Description	Qty.
	9006712	(000000-)	Manual, Oprtr [S20 Dsl, En]	1
	9006713	(000000-)	Manual, Oprtr [S20 Dsl, Es]	1
	9006714	(000000-)	Manual, Oprtr [S20 Dsl, Fr]	1
	9006715	(000000-)	Manual, Oprtr [S20 Dsl, Jp]	1
	9006716	(000000-)	Manual, Parts [S20 Dsl, En]	1
	9006717	(000000-)	Manual, Oprtr [S20 Dsl, Cn]	1
	9006718	(000000-)	Manual, Oprtr [S20 Dsl, Pbt]	1
	9006727	(000000-)	Video, Oprtr, Dvd [S20 En, Es, Fr]	1
	9006724	(000000-)	Manual, Service [S20 Gas/Lpg/Dsl, En]	1
	9009383	(000000-)	Instr, Use&Care, Wallchart [Ts20] (ONLINE ONLY)	1

To view, print, order, download the latest Parts manual, other language Operator manuals, and Use and Care Guides (wall charts), visit:

www.tennantco.com/manual

SECTION 4

Contents **Page**

Fig. 1 - Hydraulic Piston Pump Breakdown, 1045993 . . . . . 4- 2
Fig. 2 - Hydraulic Gear Motor Breakdown, 361014 . . . . . 4- 4
Fig. 3 - Hydraulic Gear Motor Breakdown, 361021 . . . . . 4- 6
Fig. 4 - Hydraulic Gear Motor Breakdown, 374559 . . . . . 4- 8
Fig. 5 - Hydraulic Gear Pump Breakdown, 361018 . . . . . 4- 9
Fig. 6 - Hydraulic Control Valve Breakdown, 361012 . . . . . 4- 10
Fig. 7 - Hydraulic Steering Valve Breakdown, 1045822 . . . . . 4- 12
Fig. 8 - Hydraulic Solenoid Valve Breakdown, 1046687 . . . . . 4- 14
Fig. 9 - Hydraulic Solenoid Valve Breakdown, 1045853 . . . . . 4- 15
Fig. 10 - Hydraulic Solenoid Valve Breakdown, 1237087 . . . . . 4- 16
Fig. 11 - Hydraulic Solenoid Valve Breakdown, 1237085 . . . . . 4- 17

Fig. 1 - Hydraulic Piston Pump Breakdown, 1045993

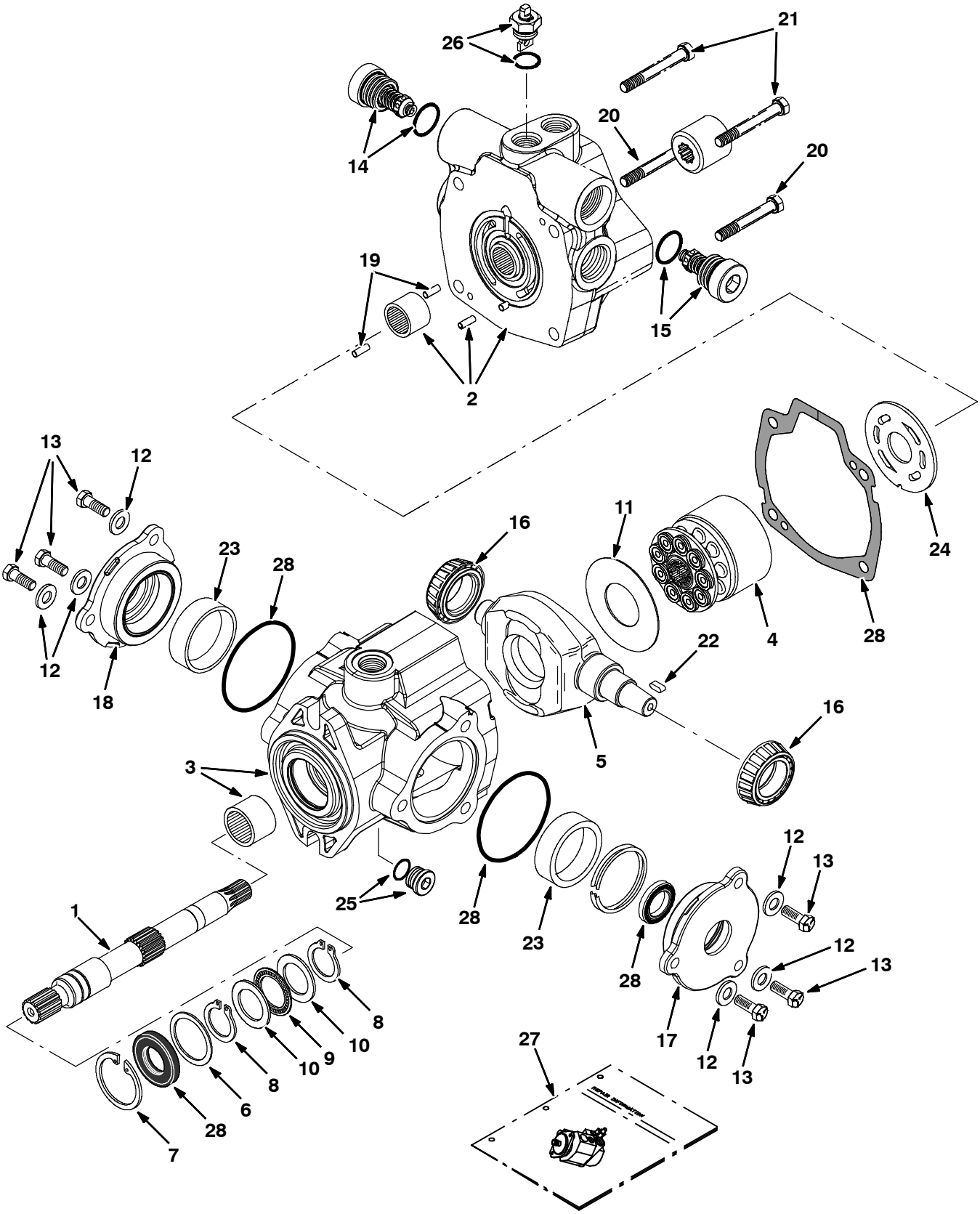

IC

Fig. 1 - Hydraulic Piston Pump Breakdown, 1045993

	Ref.	Part No.	Serial Number	Description	Qty.
▽		1045993	(000000-)	Pump, Hyd, Piston, Var, 1.24 2500, Cw	1
▲	1	21925	(000000-)	Shaft, Drive, Pump, Hyd [Cessna]	1
▲	2	373427	(000000-)	Cover, End	1
▲	3	373389	(000000-)	Housing	1
▲	4	02706	(000000-)	Pump Kit, Hyd, Rotating [Cessna]	1
▲	5	373493	(000000-)	Plate, Cam	1
▲	6	70096	(000000-)	Washer, Flat, Pump, Hyd	1
▲	7	55926	(000000-)	Ring, Retaining, Pump, Hyd	1
▲	8	373434	(000000-)	Ring, Retaining	2
▲	9	74225	(000000-)	Bearing, Thrust, Pump, Hyd	1
▲	10	74226	(000000-)	Race, Brg, Pump, Hyd	2
▲	11	373327	(000000-)	Insert, Plt, Cam, Pump, Hyd	1
▲	12	373391	(000000-)	Washer, Pump, Hyd [En]	6
▲	13	373346	(000000-)	Screw, Cap	6
▲	14	373428	(000000-)	Valve, Relief, 2000psi	1
▲	15	373721	(000000-)	Valve, Relief, 2500psi	1
▲	16	373317	(000000-)	Bearing, Cone, Pump, Hyd	2
▲	17	373393	(000000-)	Plate, Cover	1
▲	18	373394	(000000-)	Plate, Cover	1
▲	19	70100	(000000-)	Pin, Dowel, Pump, Hyd	2
▲	20	373347	(000000-)	Screw, Cap	2
▲	21	373348	(000000-)	Screw, Cap	2
▲	22	74237	(000000-)	Key, Shaft, Pump, Hyd	1
▲	23	373395	(000000-)	Bearing, Cup	2
▲	24	74180	(000000-)	Plate, Valve, Pump, Hyd	1
▲	25	13907	(000000-)	Fitting, Hyd, Plug, Om08	1
▲	26	373413	(000000-)	Actuator, Valve, By- Pass [En]	1
▲	27	373429	(000000-)	Instr, Pump, Repair	1
▲	28	373398	(000000-)	Seal Kit, Pump, Hyd	1
▲		373402	(000000-)	Shim Kit	1

Fig. 2 - Hydraulic Gear Motor Breakdown, 361014

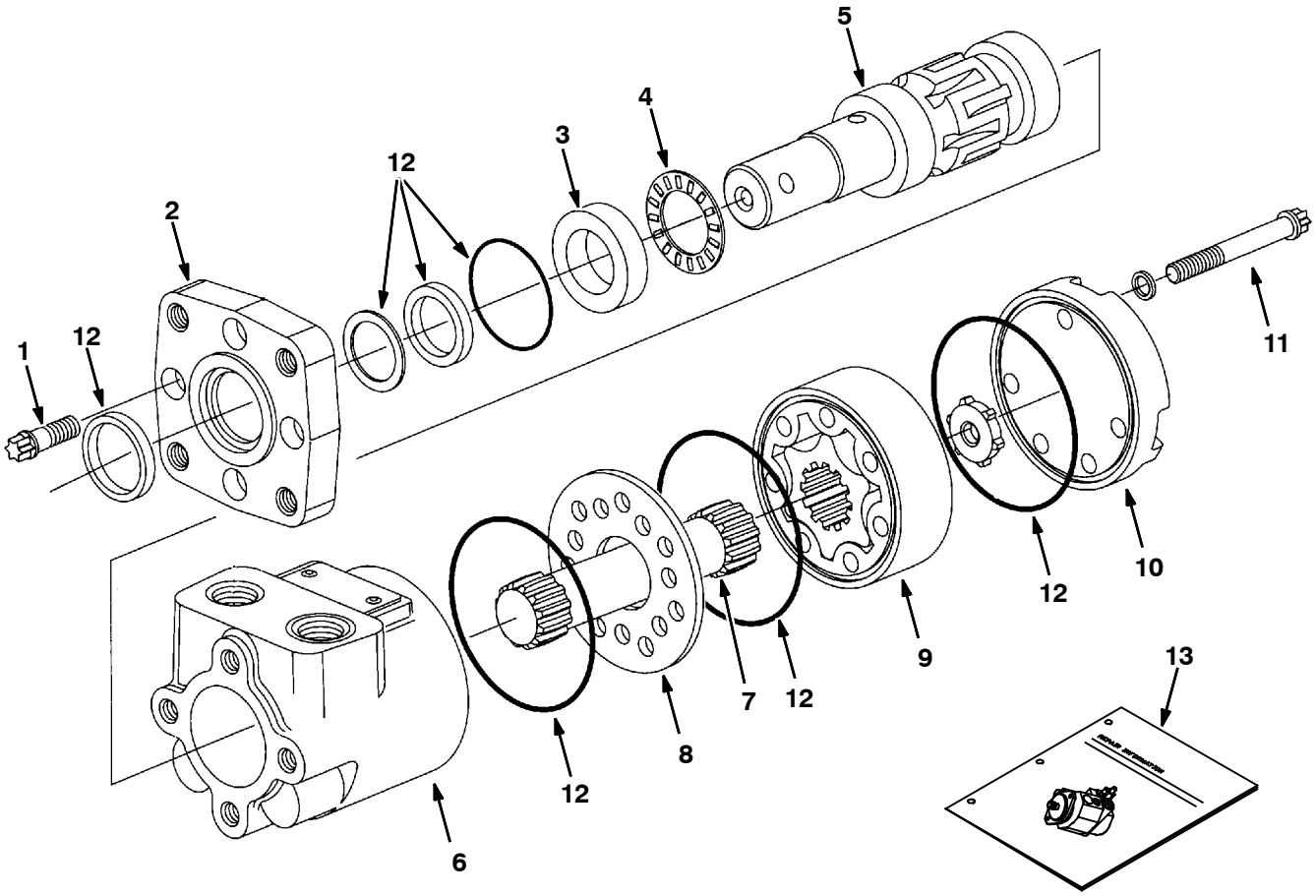

350288, 09670 - IC

Fig. 2 - Hydraulic Gear Motor Breakdown, 361014

	Ref.	Part No.	Serial Number	Description	Qty.
▽		361014	(000000-)	Motor, Hyd, Gear, Int 09.7 Bi- Dir 1500	1
▲	1	37555	(000000-)	Screw, Motor, Hyd [En]	4
▲	2	31354	(000000-)	Flange, Motor, Hyd [En]	1
▲	3	16695	(000000-)	Ace, Thrust, Motor, Hyd [En]	1
▲	4	45628	(000000-)	Bearing, Thrust	1
▲	5	31373	(000000-)	Shaft, Output, Motor, Hyd [En]	1
▲	6	74100	(000000-)	Housing, Motor, Hyd [En]	1
▲	7	21959	(000000-)	Drive, Motor, Hyd	1
▲	8	74094	(000000-)	Plate, Spacer, Motor, Hyd [En]	1
▲	9	38263	(000000-)	Gerotor, Motor, Hyd	1
▲	10	65230	(000000-)	End Cap, Motor, Hyd [En]	1
▲	11	21960	(000000-)	Screw, Cap, Motor, Hyd	5
▲	12	28835	(000000-)	Seal Kit [Cl]	1
	13	74250	(000000-)	Instr, Motor, Hyd, Repair [En]	1

Fig. 3 - Hydraulic Gear Motor Breakdown, 361021

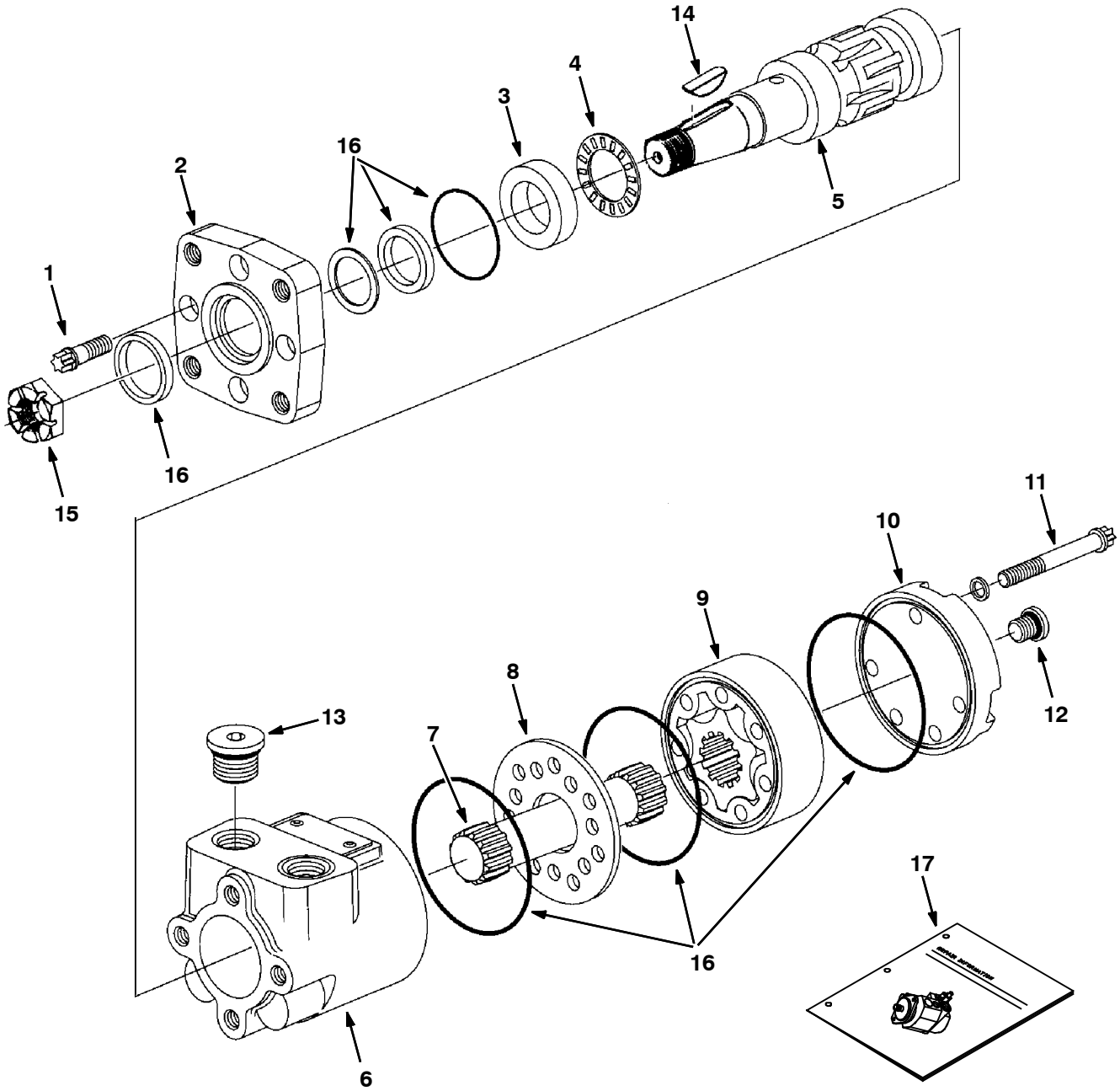

09606, 09670 - IC

Fig. 3 - Hydraulic Gear Motor Breakdown, 361021

	Ref.	Part No.	Serial Number	Description	Qty.
▽		361021	(000000-)	Motor, Hyd, Gear, Int 02.2 Bi- Dir 1500	1
▲	1	37555	(000000-)	Screw, Motor, Hyd [En]	4
▲	2	31354	(000000-)	Flange, Motor, Hyd [En]	1
▲	3	16695	(000000-)	Ace, Thrust, Motor, Hyd [En]	1
▲	4	45628	(000000-)	Bearing, Thrust	1
▲	5	31375	(000000-)	Shaft, Output, Motor, Hyd [En]	1
▲	6	74100	(000000-)	Housing, Motor, Hyd [En]	1
▲	7	34176	(000000-)	Drive, Motor, Hyd [En]	1
▲	8	74094	(000000-)	Plate, Spacer, Motor, Hyd [En]	1
▲	9	65229	(000000-)	Gerotor Set [En]	1
▲	10	74095	(000000-)	End Cap, Motor, Hyd [En]	1
▲	11	74174	(000000-)	Screw, Cap, Steering Valve [En]	5
▲	12	74098	(000000-)	Fitting, Hyd, Plug, Om04	1
▲	13	74099	(000000-)	Fitting, Hyd, Plug, Om20	2
▲	14	00500- 15	(000000-)	Key, Woodruff, 0.25 1.00 [Asa#0808]	1
▲	15	39527	(000000-)	Nut, Hex, Sltd, .75- 16	1
▲	16	28835	(000000-)	Seal Kit [Cl]	1
	17	74250	(000000-)	Instr, Motor, Hyd, Repair [En]	1

Fig. 4 - Hydraulic Gear Motor Breakdown, 374559

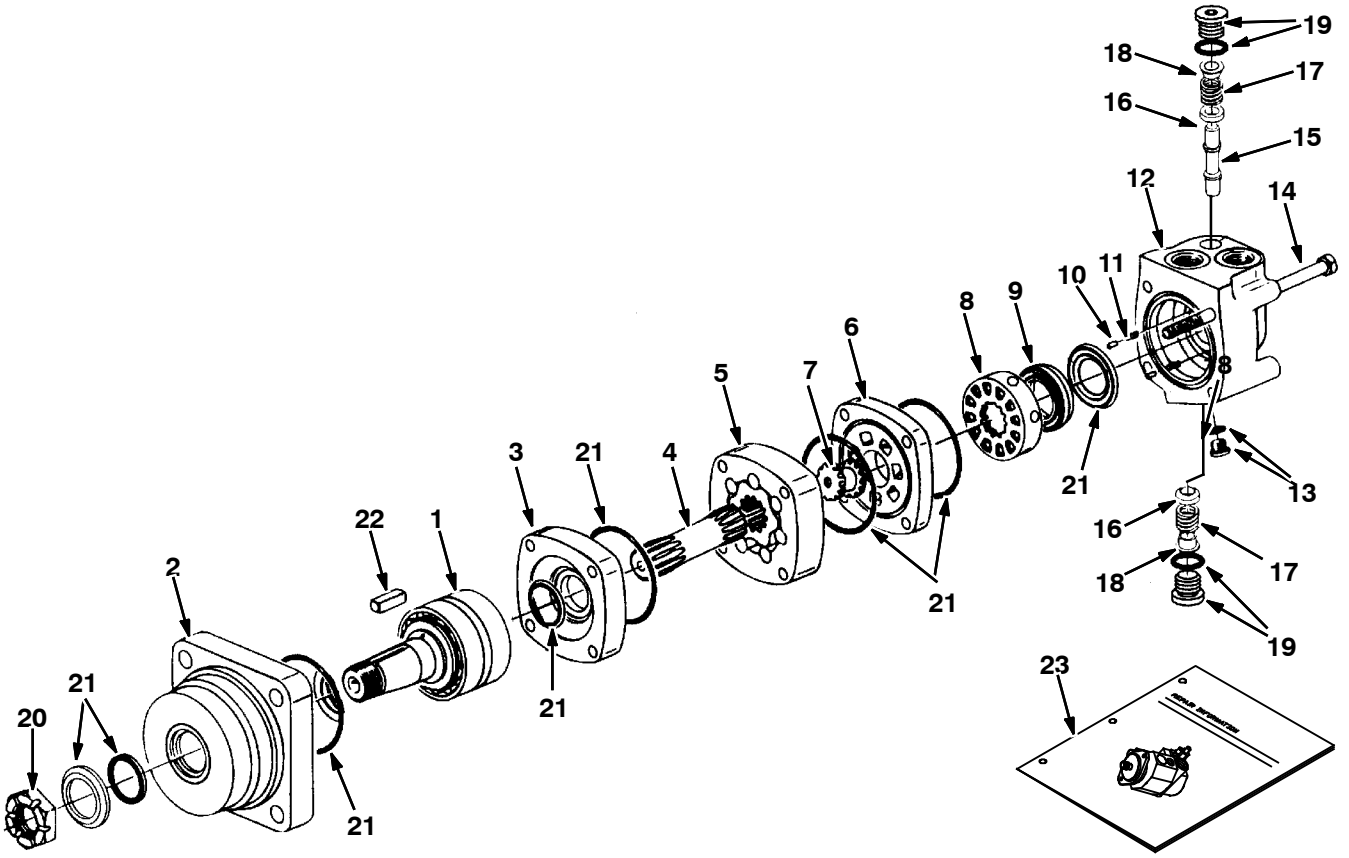

350298, 09670 - IC

	Ref.	Part No.	Serial Number	Description	Qty.
▽		374559	(000000-)	Motor, Hyd, Gear, Int 18.7 Bi- Dir 3000	1
▲	1	21951	(000000-)	Bearing Kit, Motor, Hyd, Repair [Cl]	1
▲	2	21952	(000000-)	Housing, Brg [Cl]	1
▲	3	51417	(000000-)	Plate, Pump, Hyd, Gear	1
▲	4	02603	(000000-)	Drive Shaft	1
▲	5	02645	(000000-)	Geroler Assy, Pump, Gear	1
▲	6	02646	(000000-)	Plate, Valve, Pump, Gear [Char Lynn]	1
▲	7	57370	(000000-)	Valve, Drive, Pump, Hyd, Gear	1
▲	8	02647	(000000-)	Valve, Pump, Gear Hyd [Char Lynn]	1
▲	9	57373	(000000-)	Ring, Balance, Pump, Hyd, Gear	1
▲	10	57374	(000000-)	Pin, Pump, Hyd, Gear	2
▲	11	57375	(000000-)	Spring, Pump, Hyd, Gear	2
▲	12	373292	(000000-)	Housing, Valve	1
▲	13	74098	(000000-)	Fitting, Hyd, Plug, Om04	1
▲	14	74120	(000000-)	Bolt, Motor, Hyd	4
▲	15	373217	(000000-)	Piston, Pump, Hyd, Gear	1
▲	16	373226	(000000-)	Poppet, Pump, Hyd, Gear	2
▲	17	373291	(000000-)	Spring	2
▲	18	373236	(000000-)	Sleeve, Dashpo, Pump, Hyd, Gear	2
▲	19	373260	(000000-)	Plug, Pump, Hyd, Gear	2
▲	20	38490	(000000-)	Nut, Sl, Pump, Hyd, Gear	1
▲	21	1031670	(000000-)	Seal Kit, Motor, Hyd, Gear	1
▲	22	38315	(000000-)	Key, Sq, Pump, Hyd	1
	23	79729	(000000-)	Instr, Motor, Hyd, Gear, Repair	1

Fig. 5 - Hydraulic Gear Pump Breakdown, 361018

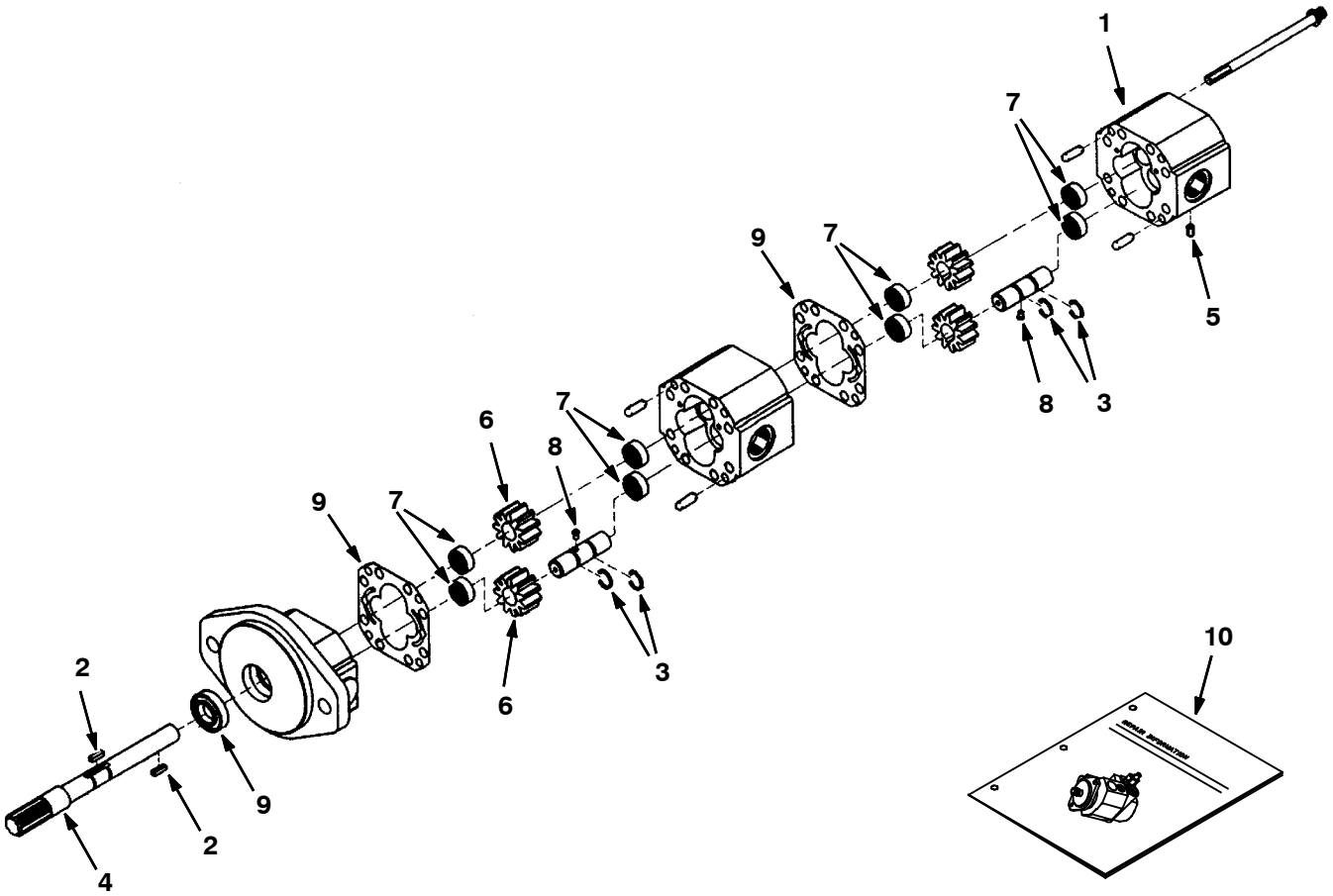

350290, 09670 - IC

	Ref.	Part No.	Serial Number	Description	Qty.
▽		361018	(000000-)	Pump, Hyd, Gear, Ext, 2, 00.39 1600, Cw (Replaced by 1071256)	1
▲	1	21978	(000000-)	Housing, End [Bn]	1
▲	2	21980	(000000-)	Key, Sq [Bn]	2
▲	3	21981	(000000-)	Ring [Crescent, Bn]	6
▲	4	21982	(000000-)	Shaft, Drive [Bn]	1
▲	5	21983	(000000-)	Plug [Bn]	1
▲	6	21984	(000000-)	Gear, Gc .750 Bn	2
▲	7	21985	(000000-)	Bearing, Needle Bn	8
▲	8	21993	(000000-)	Pin, Drive [Bn]	2
▲	9	SK2561	(000000-)	Seal Kit, Hyd, Motor	1
	10	IB2561	(000000-)	Instr, Seal Kit, Motor, [Barns&Mte]	1

Fig. 6 - Hydraulic Control Valve Breakdown, 361012

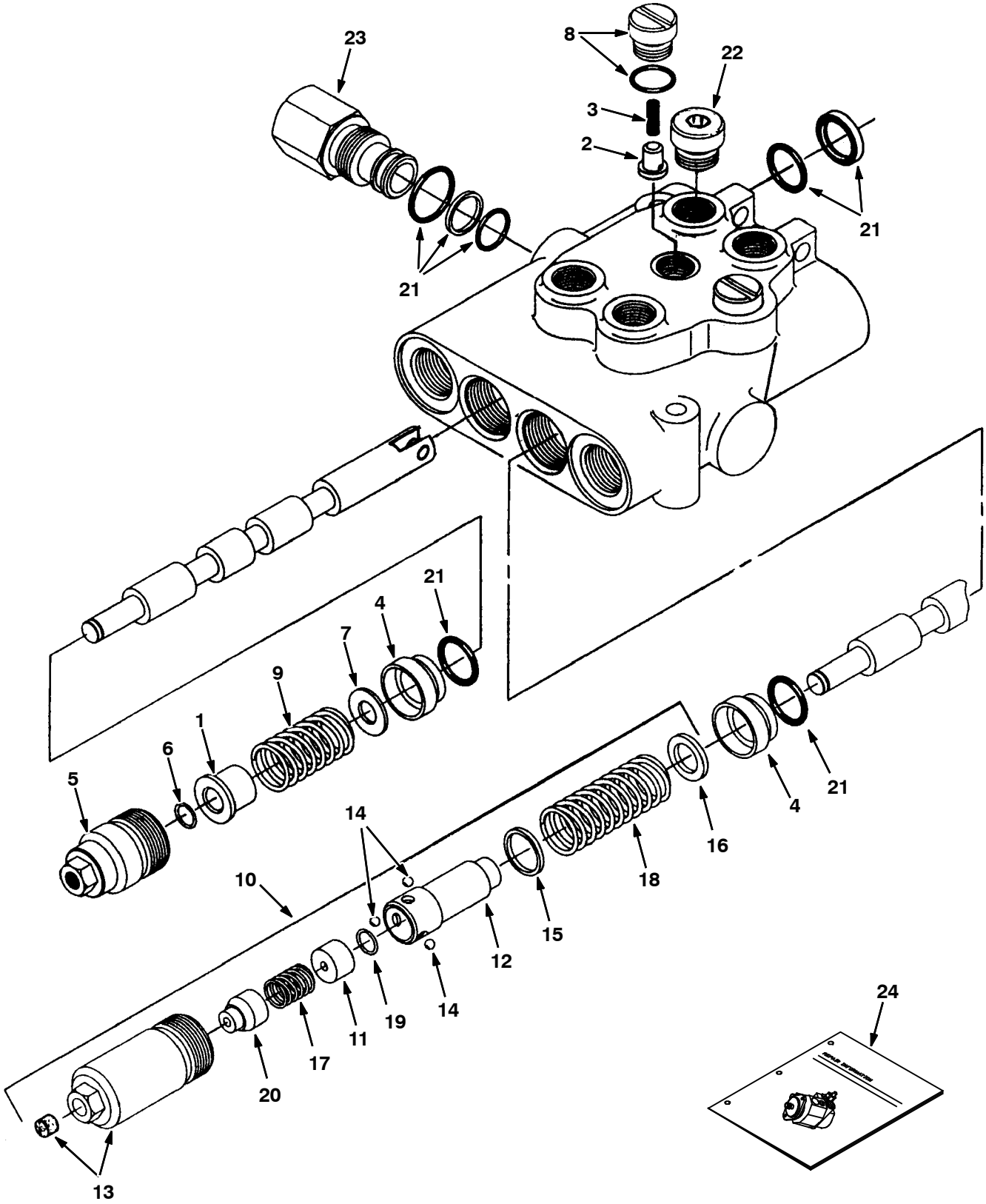

350284, 09670 - ALL

Fig. 6 - Hydraulic Control Valve Breakdown, 361012

	Ref.	Part No.	Serial Number	Description	Qty.
▽		361012	(000000-)	Valve, Hyd, Mnl, 2spool 0100psi 10gpm	1
▲	1	79785	(000000-)	Spacer, Valve, Hyd	1
▲	2	79786	(000000-)	Plunger, Valve, Hyd [En]	2
▲	3	79787	(000000-)	Spring, Valve, Hyd [En]	2
▲	4	79788	(000000-)	Bushing, Valve, Hyd En	2
▲	5	79789	(000000-)	Cap Assy, Valve, Hyd [En]	1
▲	6	79792	(000000-)	Ring, Retainer, Valve, Hyd [En]	1
▲	7	79794	(000000-)	Washer, Valve, Hyd [En]	1
▲	8	79795	(000000-)	Fitting, Hyd, Plug, W/ Org, Valve	2
▲	9	79796	(000000-)	Spring, Valve, Hyd [En]	1
▲▽	10	79814	(000000-)	Detent Kit, In [Eaton]	1
▲▲	11	79801	(000000-)	Spacer, Valve, Hyd	1
▲▲	12	79802	(000000-)	Adapter, Detent, Valve, Hyd	1
▲▲	13	21961	(000000-)	Cap Assy, Valve, Hyd	1
▲▲	14	79804	(000000-)	Ball, Valve, Hyd	3
▲▲	15	79805	(000000-)	Washer, Valve, Hyd	1
▲▲	16	79806	(000000-)	Washer, Valve, Hyd	1
▲▲	17	79807	(000000-)	Spring, Valve, Hyd	1
▲▲	18	79808	(000000-)	Spring [En]	1
▲▲	19	79792	(000000-)	Ring, Retainer, Valve, Hyd [En]	1
▲▲	20	79800	(000000-)	Cone, Valve, Hyd	1
▲	21	79812	(000000-)	Seal Kit, Valve, Hyd [En]	1
▲	22	13904	(000000-)	Fitting, Plug, Org, #6, Valve [Cec]	2
	23	361028	(000000-)	Plug Assy, Hyd	1
	24	79820	(000000-)	Instr, Valve, Hyd, Repair [En]	1

Fig. 7 - Hydraulic Steering Valve Breakdown, 1045822

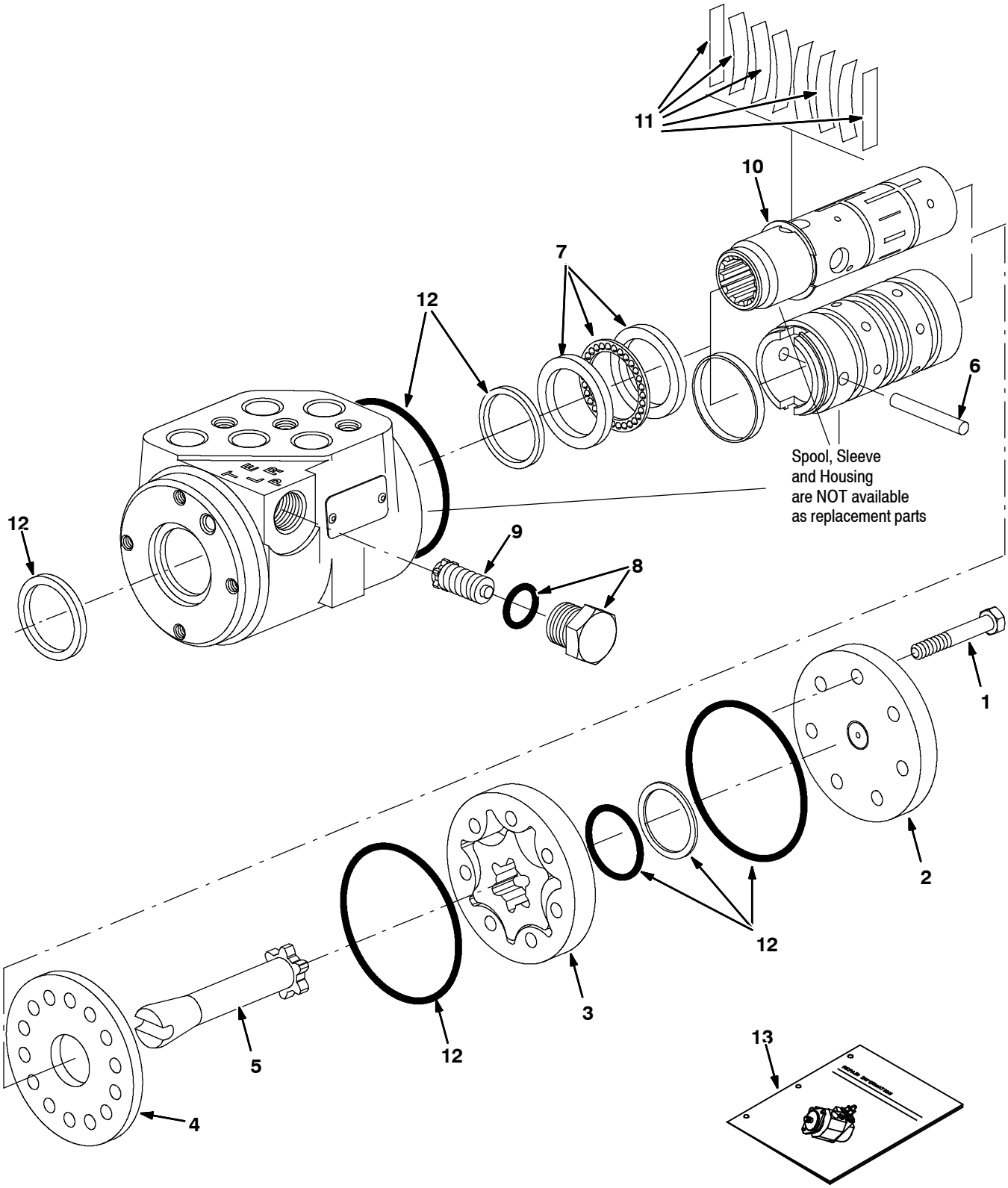

IC

Fig. 7 - Hydraulic Steering Valve Breakdown, 1045822

	Ref.	Part No.	Serial Number	Description	Qty.
▽		1045822	(000000-)	Steer- Control, Hyd05, 06.1 914	1
▲	1	74183	(000000-)	Screw, Valve, Steering	1
▲	2	74185	(000000-)	Cap, End, Valve, Steering	1
▲	3	373722	(000000-)	Gerotor, Valve, Steering (Obsolete, Replaced by None)	1
▲	4	74222	(000000-)	Plate, Wear, Steering Valve	1
▲	5	373723	(000000-)	Drive, Valve, Steering	1
▲	6	74232	(000000-)	Pin, Valve, Steering	1
▲	7	21935	(000000-)	Bearing Kit [Cl]	1
▲	8	21933	(000000-)	Plug Assy [Cl]	1
▲	9	373726	(000000-)	Valve Assy, Relief	1
▲	10	74243	(000000-)	Ring, Retainer, Steering Valve	1
▲	11	74196	(000000-)	Spring Kit, Scu [Cl]	1
▲	12	373727	(000000-)	Seal Kit, Cntrl, Steering [Cl]	1
▲	13	373728	(000000-)	Instr, Valve, Steering, Repair	1

Fig. 8 - Hydraulic Solenoid Valve Breakdown, 1046687

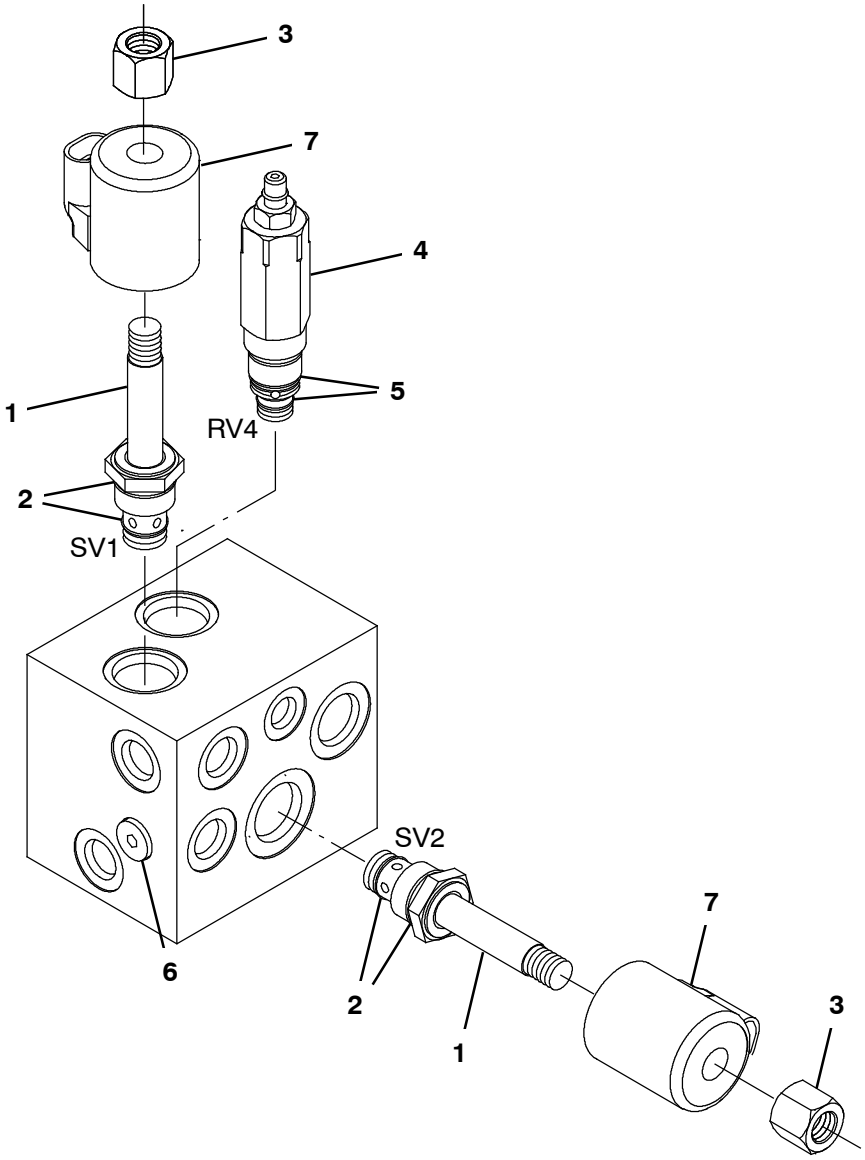

356087 - IC

	Ref.	Part No.	Serial Number	Description	Qty.
▽		1046687	(000000-)	Valve, Hyd, Solenoid, 12vdc	1
▲▽	1	373732	(000000-)	Solenoid, Cntrl	2
▲▲	2	1050780	(000000-)	Seal Kit, Cartridge	1
▲▲	3	373584	(000000-)	Nut, Short	1
▲▽	4	373733	(000000-)	Valve, Relief	1
▲▲	5	373745	(000000-)	Seal Kit, Valve, Hyd	1
▲	6	373586	(000000-)	Plug, Org	1
▲	7	373736	(000000-)	Solenoid, #10, 12vdc	2

Fig. 9 - Hydraulic Solenoid Valve Breakdown, 1045853

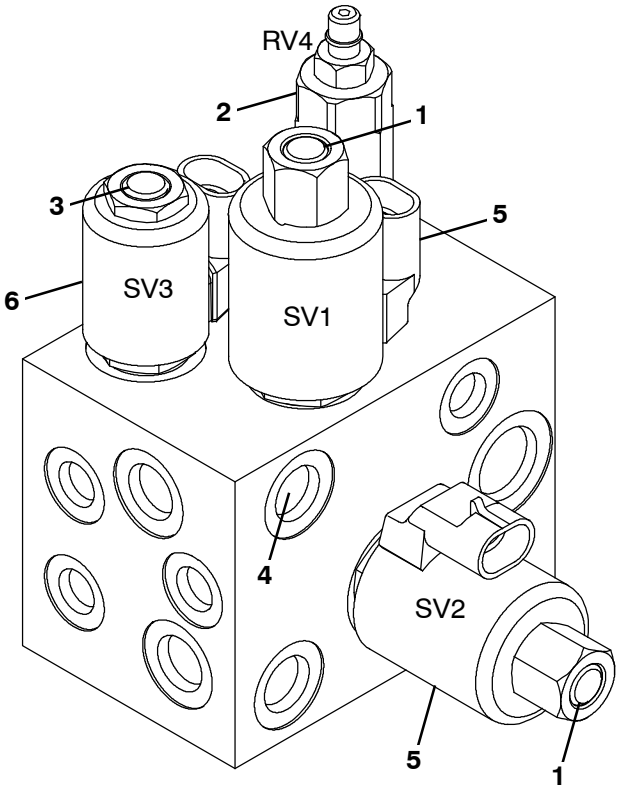

356089 - IC

	Ref.	Part No.	Serial Number	Description	Qty.
▽		1045853	(000000-)	Valve, Hyd, Solenoid, 12vdc	1
▲▽	1	373732	(000000-)	Solenoid, Cntrl	2
▲▲		373584	(000000-)	Nut, Short	1
▲▲		1050780	(000000-)	Seal Kit, Cartridge	1
▲▽	2	373733	(000000-)	Valve, Relief	1
▲▲		373745	(000000-)	Seal Kit, Valve, Hyd	1
▲▽	3	373734	(000000-)	Solenoid, Cntrl	1
▲▲		373584	(000000-)	Nut, Short	1
▲▲		1058233	(000000-)	Seal Kit, Cartridge	1
▲	4	373735	(000000-)	Plug, Orifice, Valve, Hyd, .047	1
▲	5	373736	(000000-)	Solenoid, #10, 12vdc	2
▲	6	373737	(000000-)	Solenoid, #8, 12vdc	1

Fig. 10 - Hydraulic Solenoid Valve Breakdown, 1237087

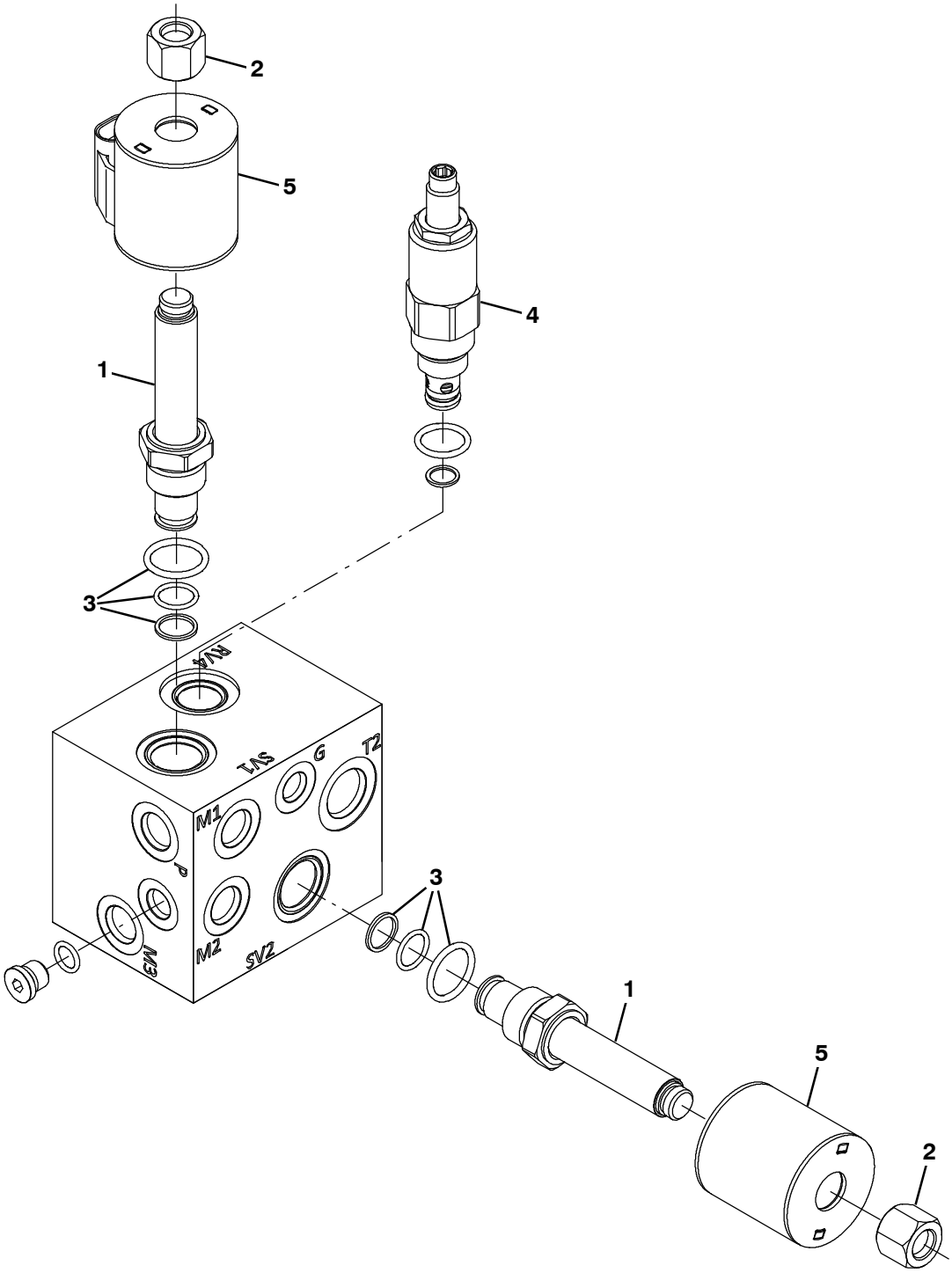

356932 - IC

	Ref.	Part No.	Serial Number	Description	Qty.
▽		1237087	(000000-)	Valve, Hyd, Solenoid, 12vdc [1046687]	1
▲▽	1	373663	(000000-)	Valve, Stem, No	2
▲▲	2	373685	(000000-)	Nut, Coil, Nyl Patch	1
▲▲	3	373646	(000000-)	Seal Kit, Cartridge	1
▲	4	9017984	(000000-)	Relief Valve [Rv08- 22a- 0- N- 35/24]	1
▲	5	373642	(000000-)	Solenoid, 12vdc, Hyd [Sz10]	2

Fig. 11 - Hydraulic Solenoid Valve Breakdown, 1237085

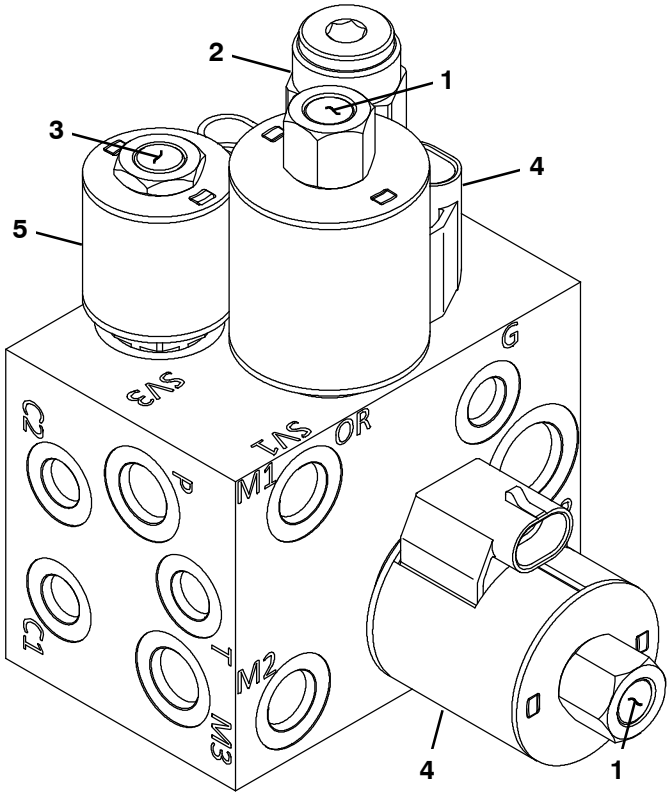

356930 - IC

	Ref.	Part No.	Serial Number	Description	Qty.
▽		1237085	(000000-)	Valve, Hyd, Solenoid, 12vdc [1045853]	1
▲▽	1	373663	(000000-)	Valve, Stem, No	2
▲▲		373685	(000000-)	Nut, Coil, Nyl Patch	1
▲▲		373646	(000000-)	Seal Kit, Cartridge	1
▲	2	9017983	(000000-)	Relief Valve [Rv10- 22h- 0- N- 35/24]	1
▲▽	3	373657	(000000-)	Valve, Stem, Hyd	1
▲▲		373684	(000000-)	Nut, Coil, Nyl Patch	1
▲	4	373642	(000000-)	Solenoid, 12vdc, Hyd [Sz10]	1
▲	5	373736	(000000-)	Solenoid, 12vdc, Hyd [Sz10]	2

SECTION 5

Contents **Page**

Fig. 1 - Crankcase Group 5- 2
Fig. 2 - Oil Pan Group 5- 4
Fig. 3 - Cylinder Head Group 5- 5
Fig. 4 - Gear Case Group 5- 6
Fig. 5 - Valve and Rocker Arm Group 5- 8
Fig. 6 - Piston and Crankshaft Group 5- 10
Fig. 7 - Head Cover Group 5- 12
Fig. 8 - Injection Pump Group 5- 13
Fig. 9 - Injection Pump Breakdown 5- 14
Fig. 10 - Cover Group 5- 16
Fig. 11 - Dipstick and Guide Group 5- 17
Fig. 12 - Main Bearing Case Group 5- 18
Fig. 13 - Camshaft Group 5- 19
Fig. 14 - Flywheel Group 5- 20
Fig. 15 - Fuel Camshaft Group 5- 21
Fig. 16 - Engine Stop Lever Group 5- 22
Fig. 17 - Stop Solenoid Group 5- 23
Fig. 18 - Governor Group 5- 24
Fig. 19 - Speed Control Plate Group 5- 25
Fig. 20 - Nozzle Holder and Glow Plug Group . 5- 26
Fig. 21 - Nozzle Holder Breakdown 5- 27
Fig. 22 - Timer Group 5- 28
Fig. 23 - Starter Group 5- 29
Fig. 24 - Starter Breakdown 5- 30
Fig. 25 - Water Flange and Thermostat Group 5- 32
Fig. 26 - Water Pump Group 5- 33
Fig. 27 - Alternator and Pulley Group 5- 34
Fig. 28 - Fan Group 5- 35
Fig. 29 - Exhaust Manifold Group 5- 36
Fig. 30 - Inlet Manifold Group 5- 37

Fig. 1 - Crankcase Group

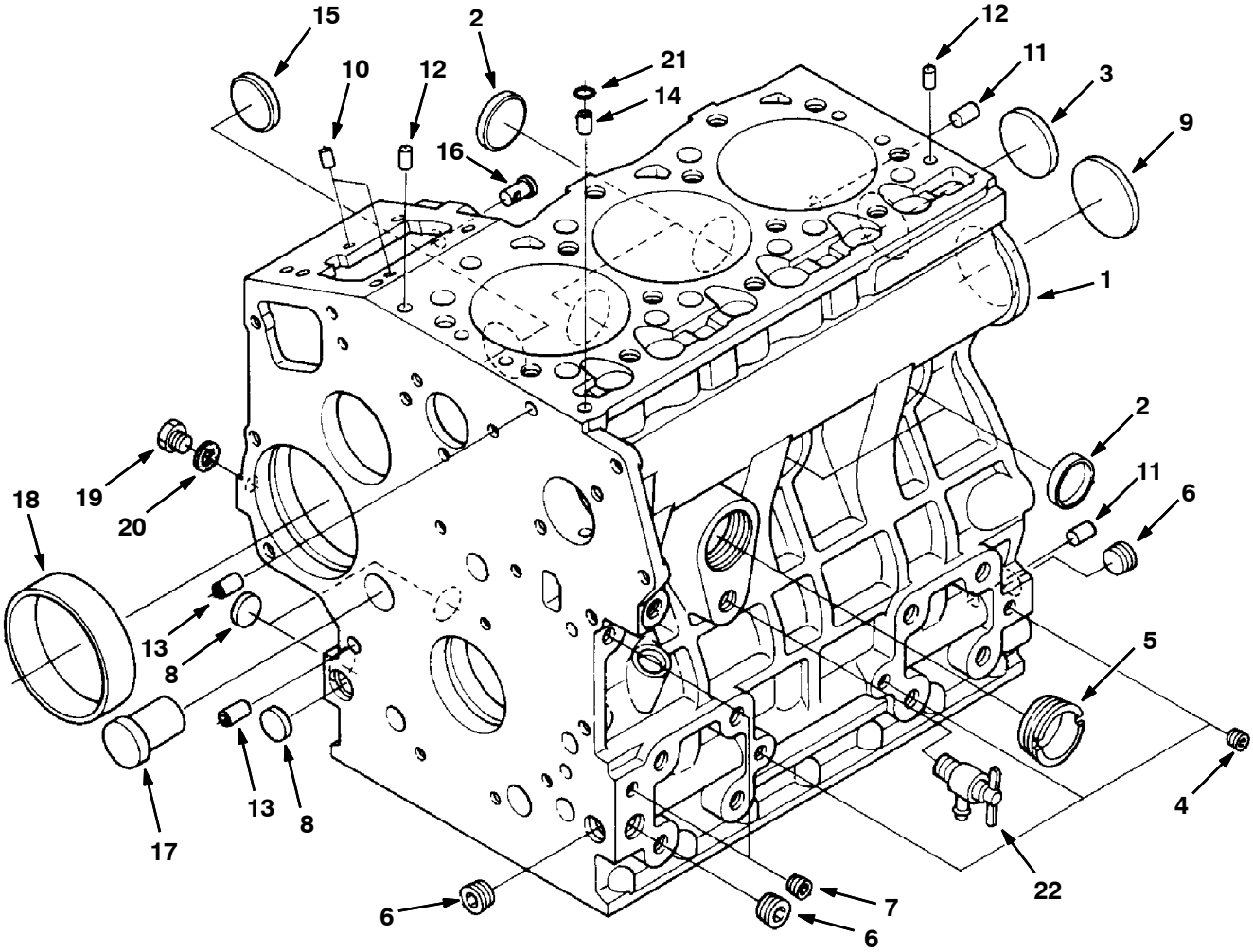

Fig. 1 - Crankcase Group

	Ref.	Part No.	Description	Qty.
▽	1	9004993	Crankcase Assy [Ku]	1
▲	2	70998	Cap, Sealing	4
▲	3	39087	Cap Sealing	1
▲	4	39088	Plug, Pin	3
▲	5	70999	Plug, Eng [Ku]	1
▲	6	71985	Plug	3
▲	7	39051	Plug, Pin	2
▲	8	361436	Plug	3
▲	9	71986	Plug, Expansion	1
▲	10	71987	Pin, Straight	2
▲	11	71988	Pin, Straight	2
▲	12	71989	Pin, Straight	2
▲	13	361371	Pin,Pipe	2
▲	14	71991	Pin, Pipe	11
▲	15	71992	Plug	1
▲	16	361416	Pin,Start Sprngku	1
▲	17	71993	Plug	1
▲	18	70887	Bushing, Gov Gear	1
▲	19	39062	Plug	1
▲	20	393570	Gasket	1
	21	39063	O- Ring	1
	22	70888	Draincock Asy	1

Fig. 2 - Oil Pan Group

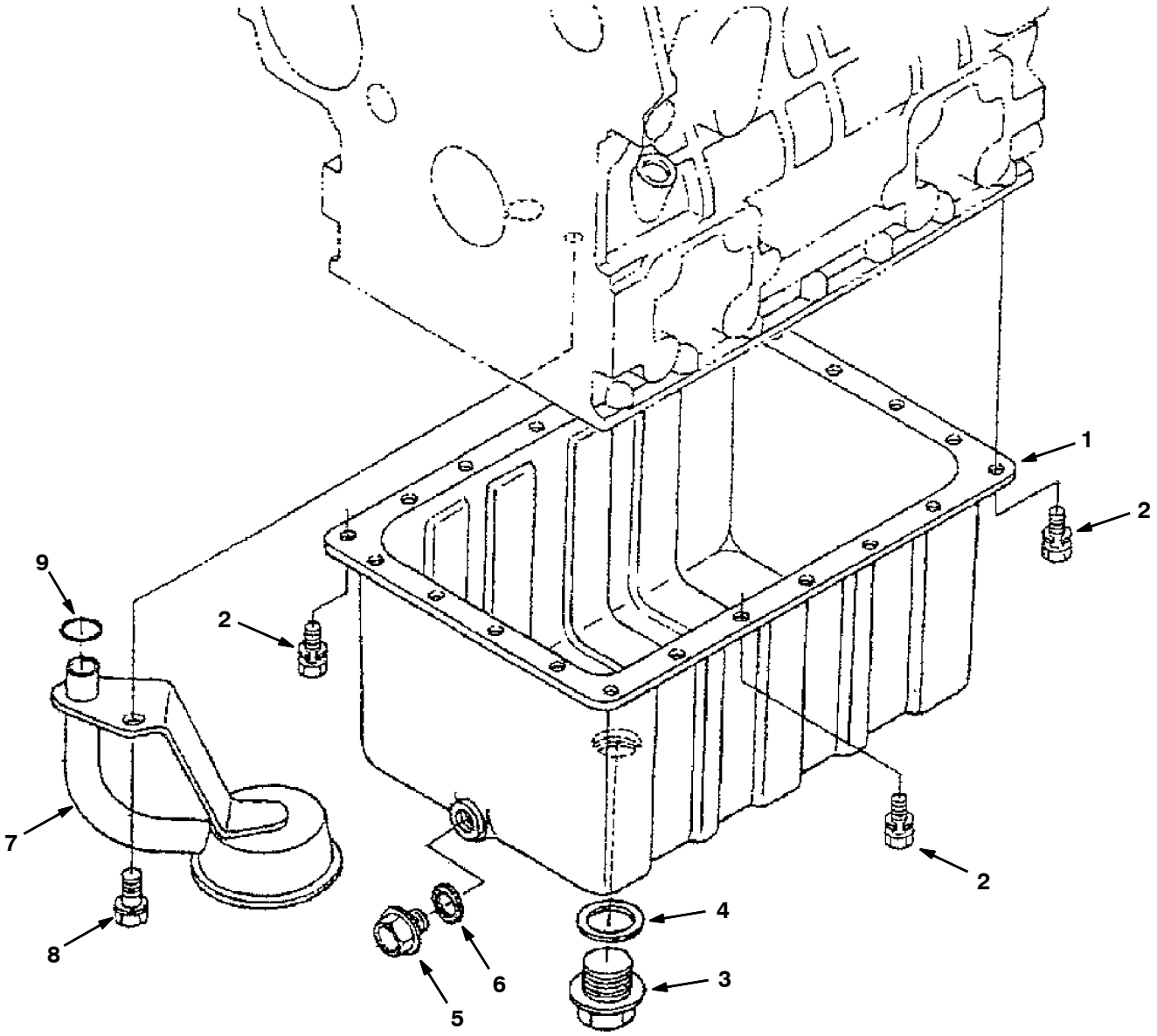

Ref.	Part No.	Description	Qty.
1	9004996	Pan, Oil, Complt [Ku]	1
2	9004997	Screw, Hex [Ku]	22
3	361431	Plug,Drain	1
4	9004999	Gasket, Plug, Drain [Ku]	1
5	9005000	Plug, Drain, Oil [Ku]	1
6	9005001	Gasket, Plug, Drain [Ku]	1
7	9005002	Tube, Pickup, Oil [Sump, Ku]	1
8	39094	Bolt	1
9	9004339	Seal, Org	1

Fig. 3 - Cylinder Head Group

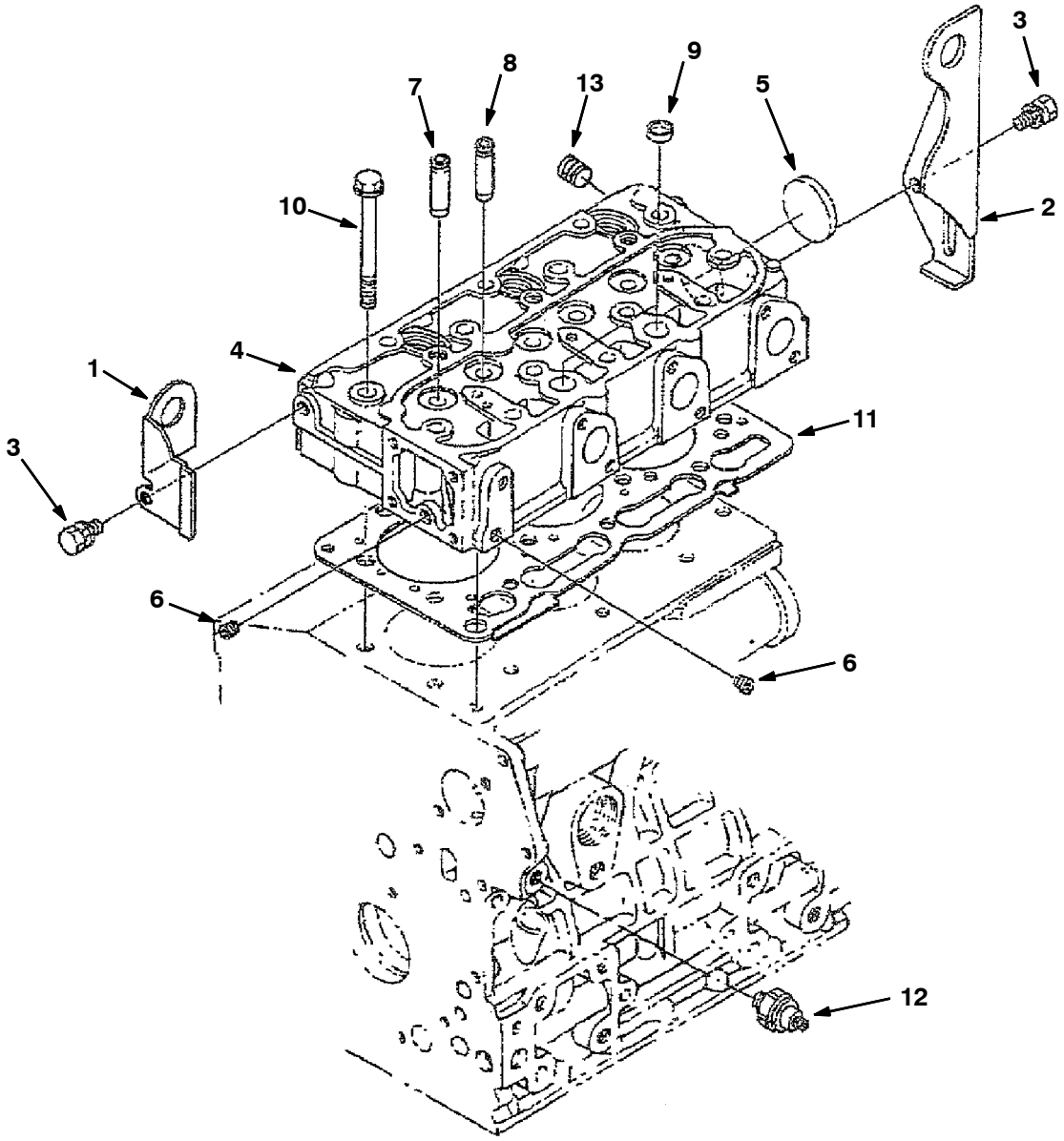

	Ref.	Part No.	Description	Qty.
	1	71996	Hook, Engine	1
	2	71997	Hook, Engine 2	1
	3	39073	Bolt	2
▽	4	9004994	Head, Cyl, W/O Valve [Ku]	1
▲	5	51331	Cap	1
▲	6	39088	Plug, Pin	2
▲	7	372906	Guide, Valve, Inlet	3
▲	8	372907	Guide, Valve, Exhaust	3
▲	9	361372	Cap,Sealing	2
	10	70897	Cyl.Head Bolt	14
	11	9004995	Gasket, Head, Cyl [Ku]	1
	12	87940	Oil Switch	1
	13	72010	Plug	1

Fig. 4 - Gear Case Group

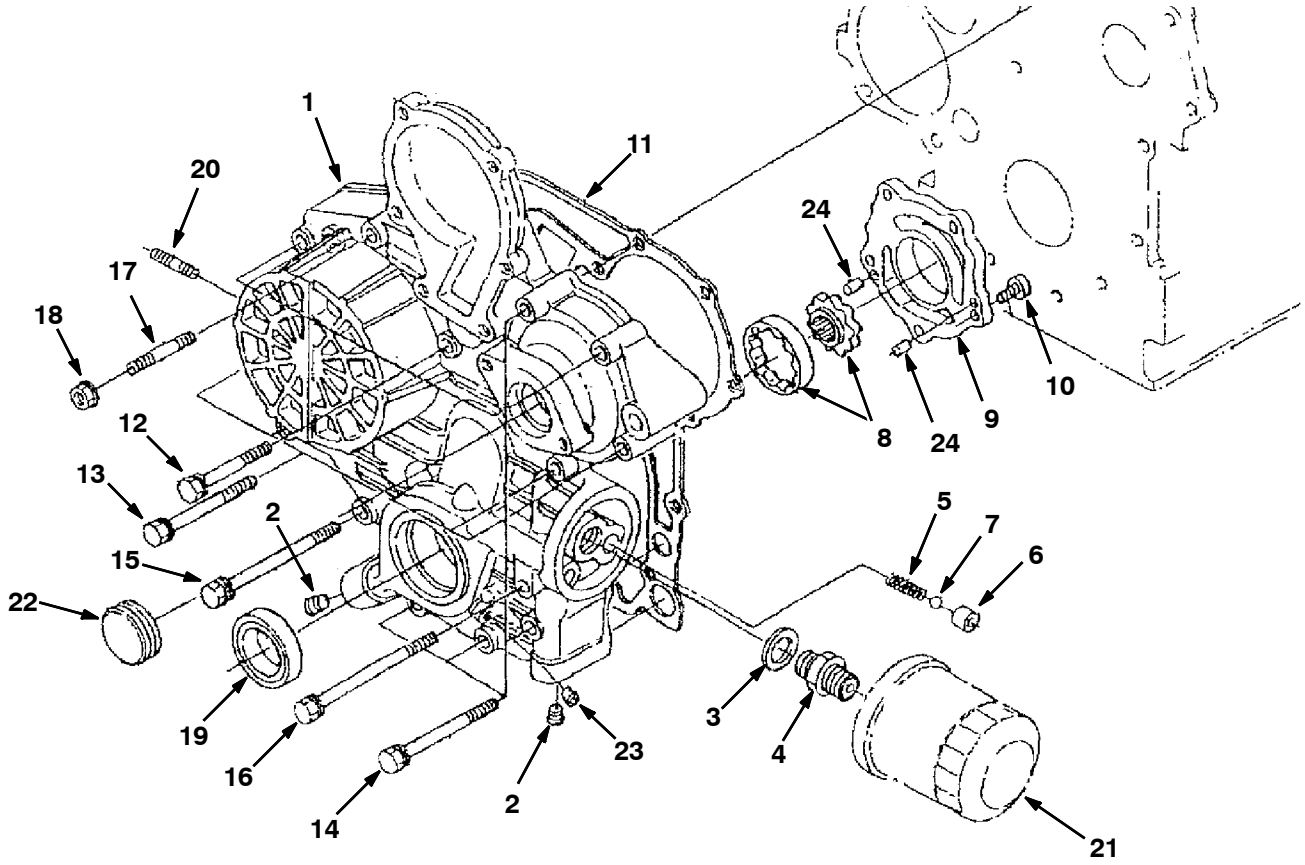

Fig. 4 - Gear Case Group

	Ref.	Part No.	Description	Qty.
▽	1	9005003	Case, Gear, Complt [Ku]	1
▲	2	361401	Plug	2
▲	3	39114	Washer	1
▲	4	12916	Joint Pipe	1
▲	5	70900	Spring	1
▲	6	70901	Valve Seat	1
▲	7	70902	Ball	1
▲	8	70903	Pump, Oil	1
▲	9	9004343	Pump, Oil, Cover [Ku]	1
▲	10	9004345	Screw [Ku]	5
	11	70912	Gasket, Gearcase	1
	12	9005004	Screw, Hex [Ku]	3
	13	72994	Bolt	6
	14	72995	Bolt	2
	15	72014	Bolt	1
	16	72015	Bolt	1
	17	9004346	Stud [Ku]	1
	18	9005006	Nut, Hex [Ku]	1
	19	361389	Seal,Oil	1
	20	9004347	Stud [Ku]	2
	21	9005007	Element, Fltr, Oil, Spin- on [Ku]	1
	22	72019	Cover	1
	23	39051	Fitting, Pipe, Plug [Ku]	1
	24	9004344	Pin, Straight [Ku]	2

Fig. 5 - Valve and Rocker Arm Group

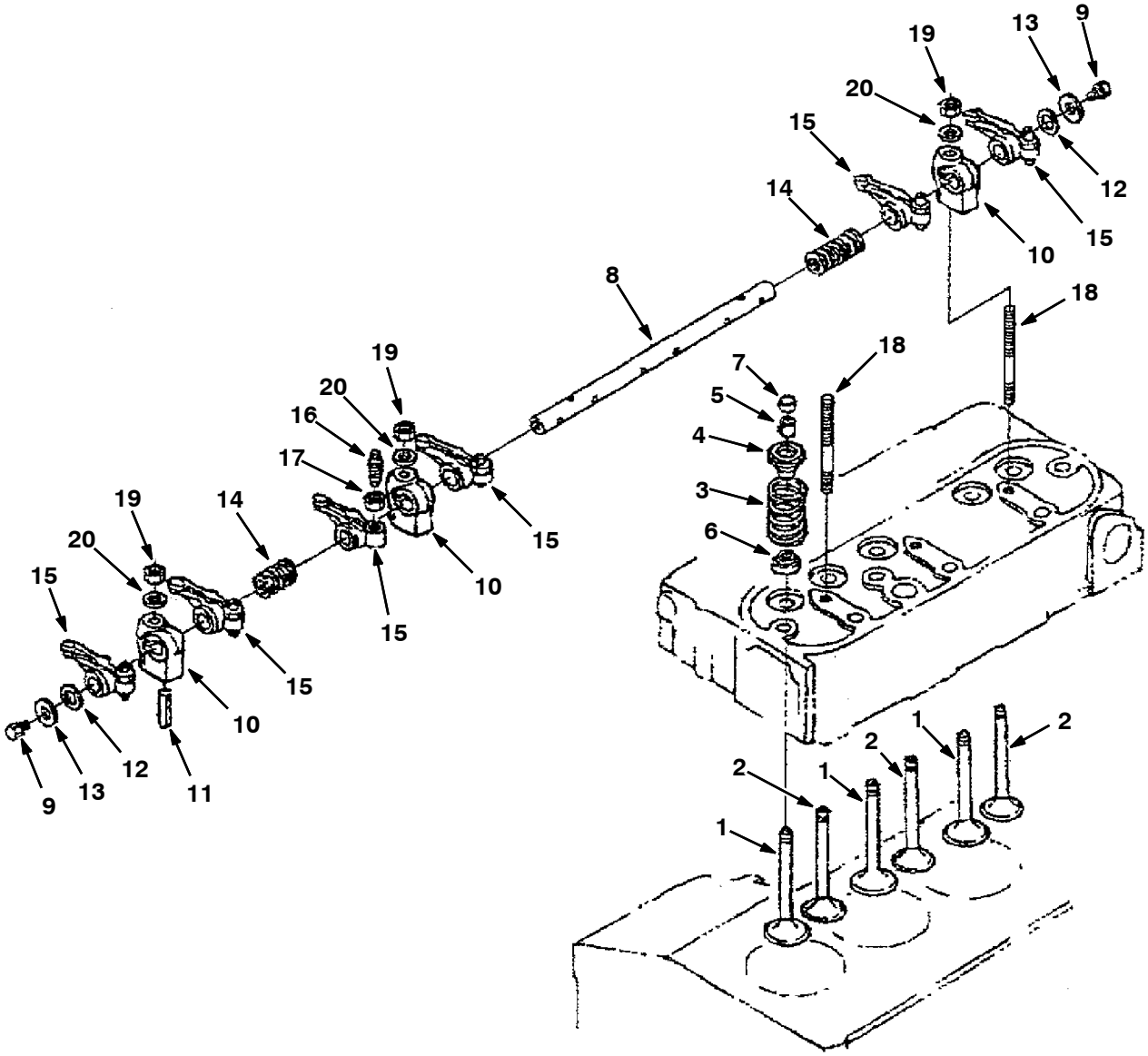

Fig. 5 - Valve and Rocker Arm Group

	Ref.	Part No.	Description	Qty.
	1	70936	Inlet Valve	3
	2	70937	Valve, Exhaust	3
	3	73491	Spring, Valve	6
	4	9005044	Spring, Cmpr, Rocker [Ku]	6
	5	73493	Collet, Spring	12
	6	9005045	Seal, Valve, Stem [Ku]	6
	7	361392	Cap,Valve	6
▽	8	9005046	Shaft, Arm, Rocker [Ku]	1
▲	9	71995	Screw, Hex [Ku]	2
▲	10	73497	Bracket, Arm	3
▲	11	9004410	Pin, Spring [Ku]	1
▲	12	73502	Washer	2
▲	13	361589	Washer, Flat [Ku]	2
▲	14	73504	Spring, Arm	2
▲▽	15	73506	Rocker Arm Assy	6
▲▲	16	73507	Screw, Adjusting	1
▲▲	17	73508	Nut	1
	18	73498	Stud	3
	19	73499	Nut	3
	20	73500	Washer, Plain	3

Fig. 6 - Piston and Crankshaft Group

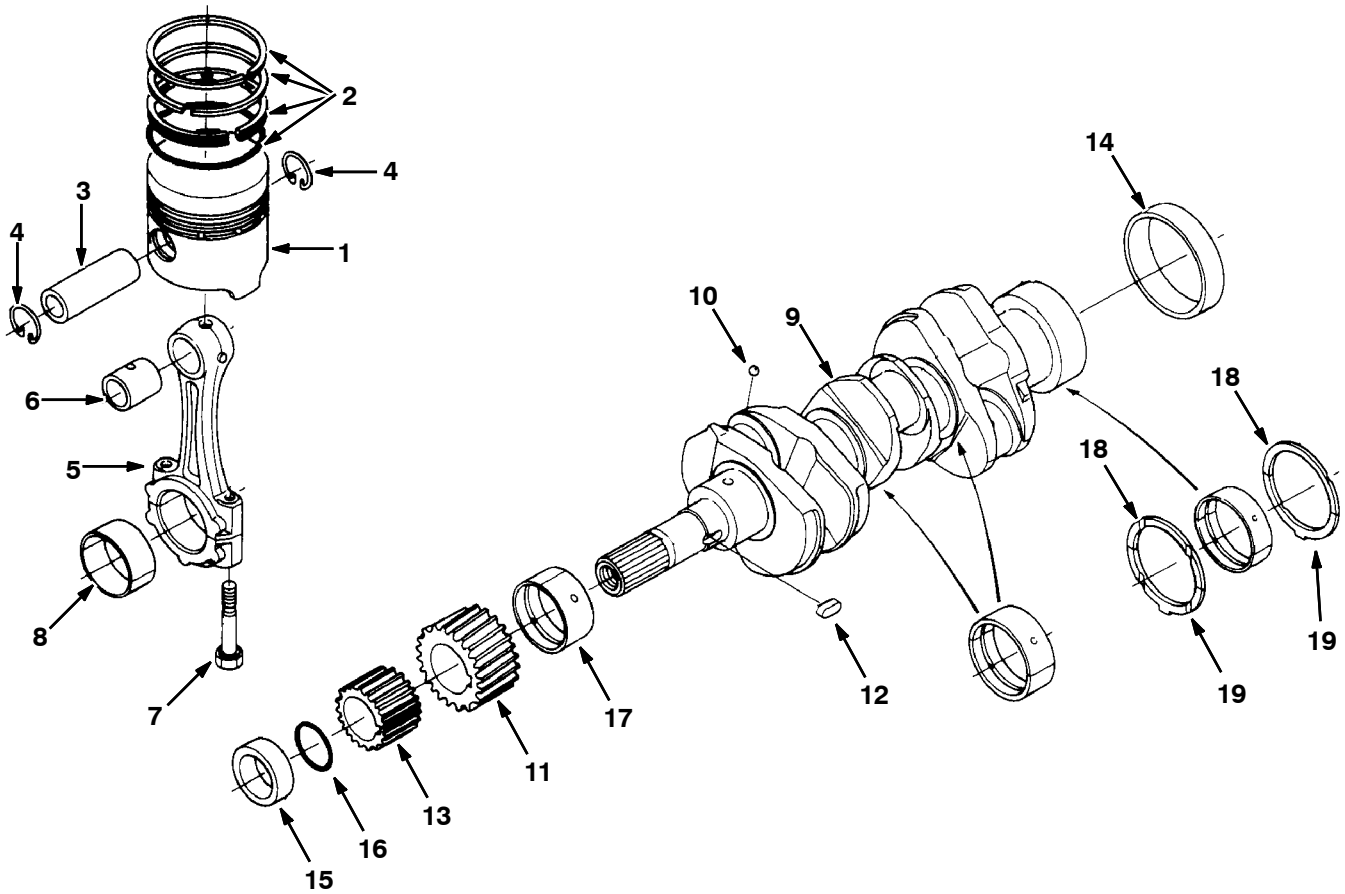

Fig. 6 - Piston and Crankshaft Group

	Ref.	Part No.	Description	Qty.
	1	9005011	Piston, Std [Ku]	3
	1	9005012	Piston [+.5mm, Ku]	3
	2	9005013	Ring, Piston, Std [Ku]	3
	2	9005014	Ring, Piston [+.5mm, Ku]	3
	3	73522	Pin, Piston	3
	4	73523	Cir- Clip, Pin	6
▽	5	9005015	Rod Assy, Connecting [Ku]	3
▲	6	9005016	Bushing, Pin, Piston [Ku]	3
▲	7	73525	Bolt, Connecting Rod	6
▲	8	66204	Rod, Bearing Set 0.2	6
▲	8	66207	Rod, Bearing Set 0.4	6
▲	8	70941	Crank Pin, Metal	6
▽	9	361388	Comp.Crankshaft	1
▲	10	73527	Ball	3
▲	11	73528	Gear, Crankshaft	1
▲	12	73529	Crankshaft, Keyway	1
▲	13	73530	Gear, Oil Pump	1
▲	14	70942	Cshaft Sleeve	1
	15	70943	Collar, Crankshaft	1
	16	9004363	Ring [Ku]	1
	17	70945	Cshft Mtl 1	1
	17	70946	Crankshaft Mtl1(02)	1
	17	70947	Cshft Mtl1	1
	18	9005017	Bearing, Thrust, Std [Ku]	2
	18	70954	Metl1, Side	2
	18	70955	Side Metl1(04)	2
	19	9005018	Bearing, Thrust, Std [Ku]	2
	19	30121	Thrust Bearing .2Mm	2
	19	30122	Thrust Bearing .4Mm	2

Fig. 7 - Head Cover Group

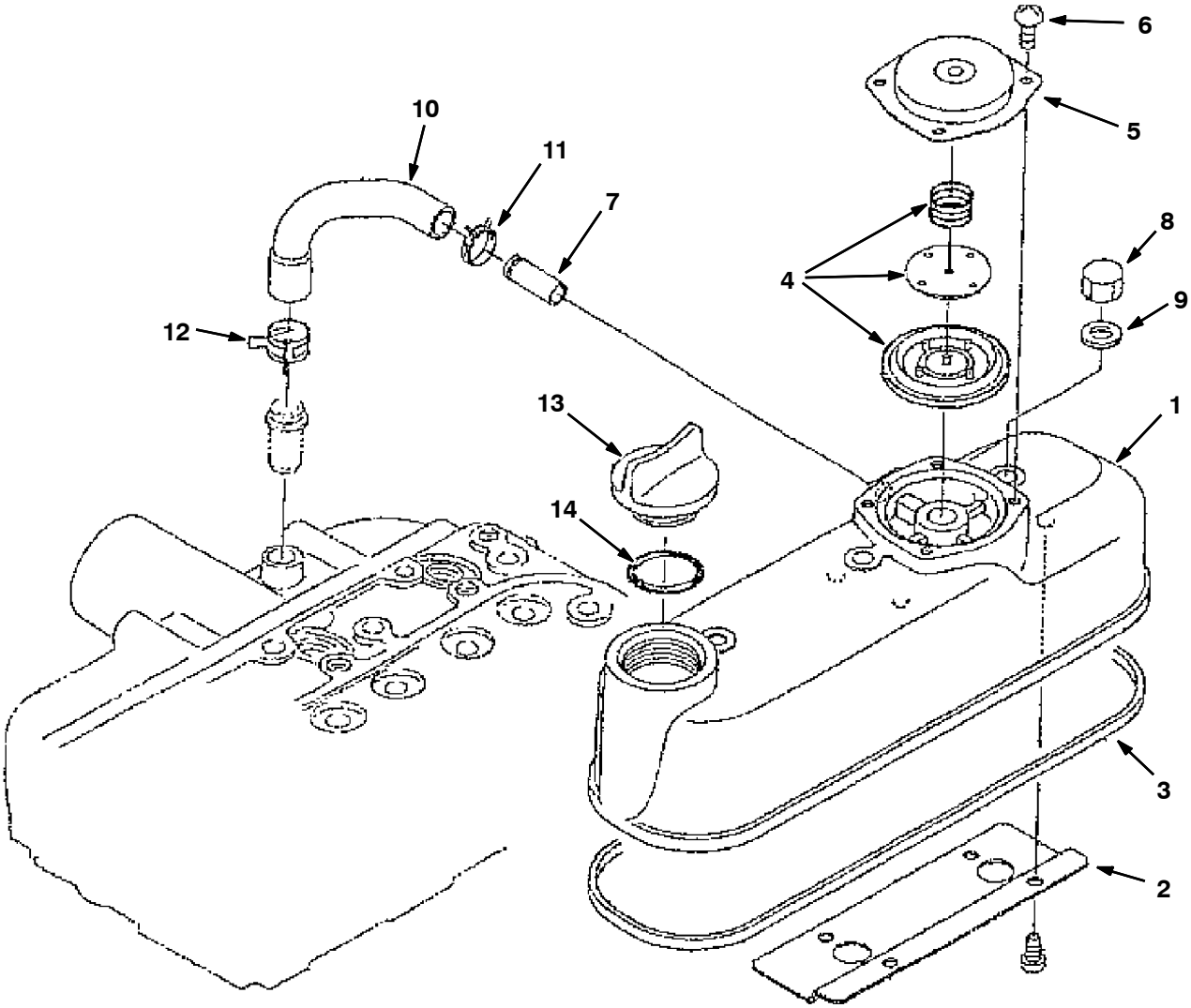

	Ref.	Part No.	Description	Qty.
▽	1	372914	Cover Assy, Head, Cyl	1
▲	2	372912	Shield, Breather	1
▲	3	361411	Gasket, Cover, Valve	1
▲	4	372928	Valve, Breather, Complt	1
▲	5	384874	Cover, Breather	1
▲	6	372900	Screw, Pan	4
▲	7	30125	Pipe, Water	1
	8	73483	Nut, Hex, Cap	3
	9	73484	Gasket, F/Bolt	3
	10	372913	Tube, Breather	1
	11	372901	Clamp, Hose	1
	12	372904	Clamp, Hose	1
	13	361374	Cap, Filler, Oil [Ku]	1
	14	70913	Seal, Org	1

Fig. 8 - Injection Pump Group

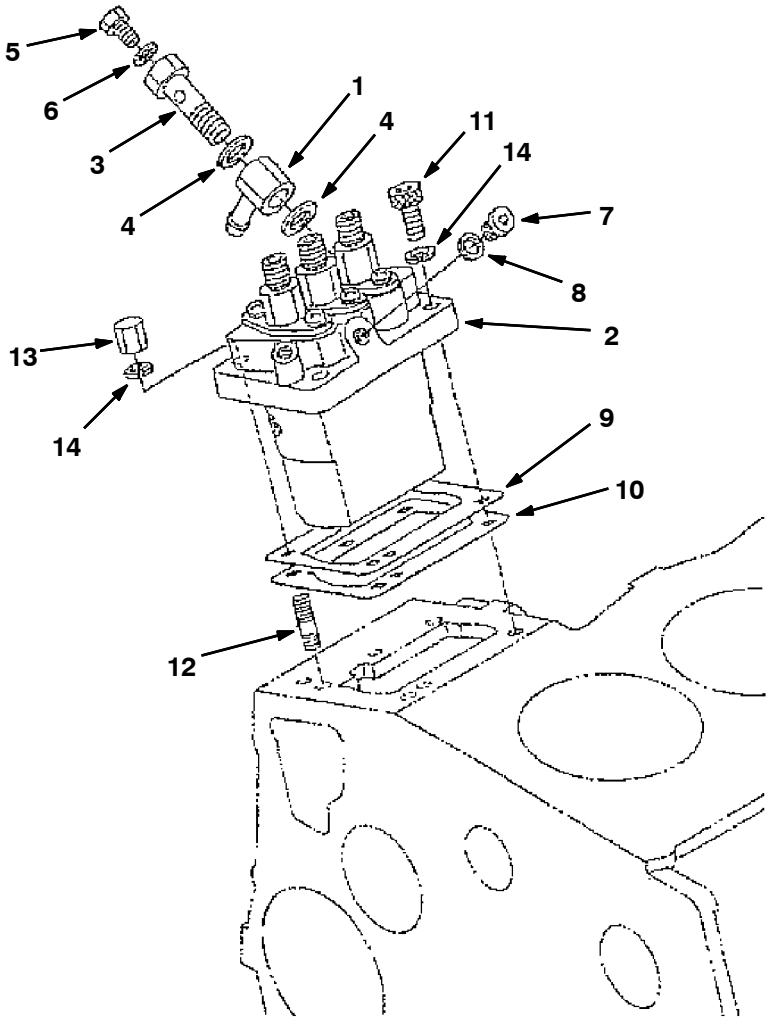

Ref.	Part No.	Description	Qty.
1	70970	Joint, Eye	1
2	361378	Pump Assy, Inj, Fuel (See Injector Pump Breakdown)	1
3	84651	Follower, Screw, Pump, Inj [Ku]	1
4	73588	Gasket, Ftg, Banjo [Ku]	2
5	73589	Screw, Hex [Ku]	1
6	73590	Gasket, F/ Screw [Ku]	1
7	368068	Fitting, Plug, Pump, Inj [Ku]	1
8	368065	Gasket, F/ Screw [Ku]	1
9	9005021	Shim, Injection, 0.175mm [Ku]	1
9	368063	Shim, Injection, 0.20mm [Ku]	1
9	368064	Shim, Injection, 0.25mm [Ku]	1
10	9005022	Shim, Pump, Injection, .35 [Ku]	1
10	361438	Shim, Pump, Inj, .3 [Ku]	1
11	9005023	Bolt, Hex, Soc [Ku]	2
12	73562	Stud [Ku]	2
13	73563	Nut [Ku]	2
14	39065	Washer, Split Loc [Ku]	4

Fig. 9 - Injection Pump Breakdown

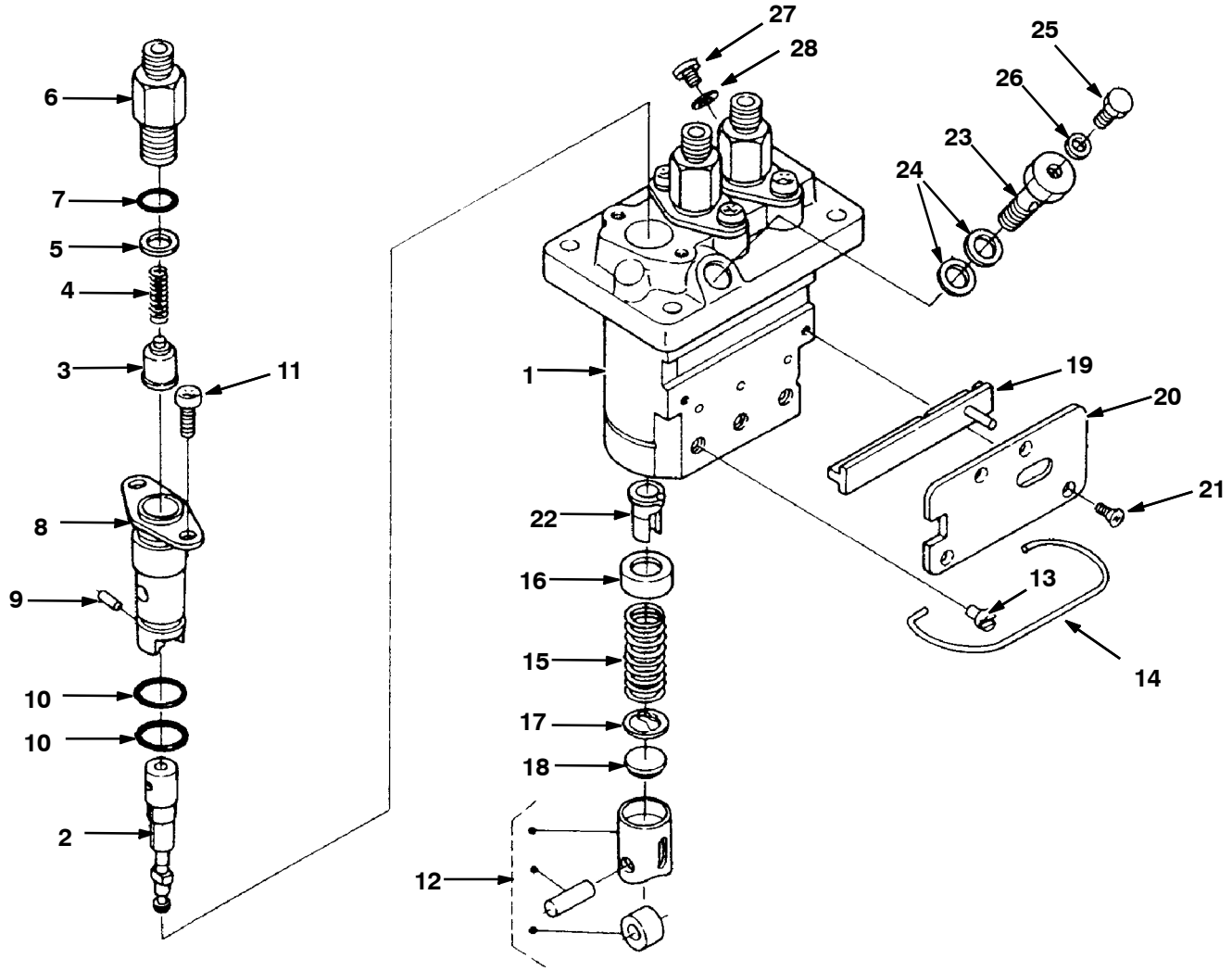

Fig. 9 - Injection Pump Breakdown

	Ref.	Part No.	Description	Qty.
▽	1	361378	Assy pump, injection	1
▲	2	84648	Element, pump	1
▲	3	73567	Valve, delivery	1
▲	4	73568	Spring, deliv valve	2
▲	5	73569	Gasket, deliv valve	1
▲	6	73570	Holder, deliv valve	1
▲	7	73571	O ring	1
▲	8	73572	Flange, sleeve	2
▲	9	73573	Pin, joint	2
▲	10	73574	O ring	2
▲	11	73575	Screw	4
▲	12	73576	Assy tappet	1
▲	13	73577	Pin, tappet guide	1
▲	14	368067	Pin, clamp	1
▲	15	73579	Spring,plunger	2
▲	16	73580	Seat, spring upper	1
▲	17	73581	Seat, spring lower	1
▲	18	73582	Shim	1
▲	19	368069	Rack, control	2
▲	20	368066	Plate	2
▲	21	73585	Screw	2
▲	22	73586	Sleeve, control	4
▲	23	84651	Bolt, joint	1
▲	24	73588	Gasket	1
▲	25	73589	Screw	1
▲	26	73590	Gasket	2
▲	27	368068	Plug	1
▲	28	368065	Gasket	1

Fig. 10 - Cover Group

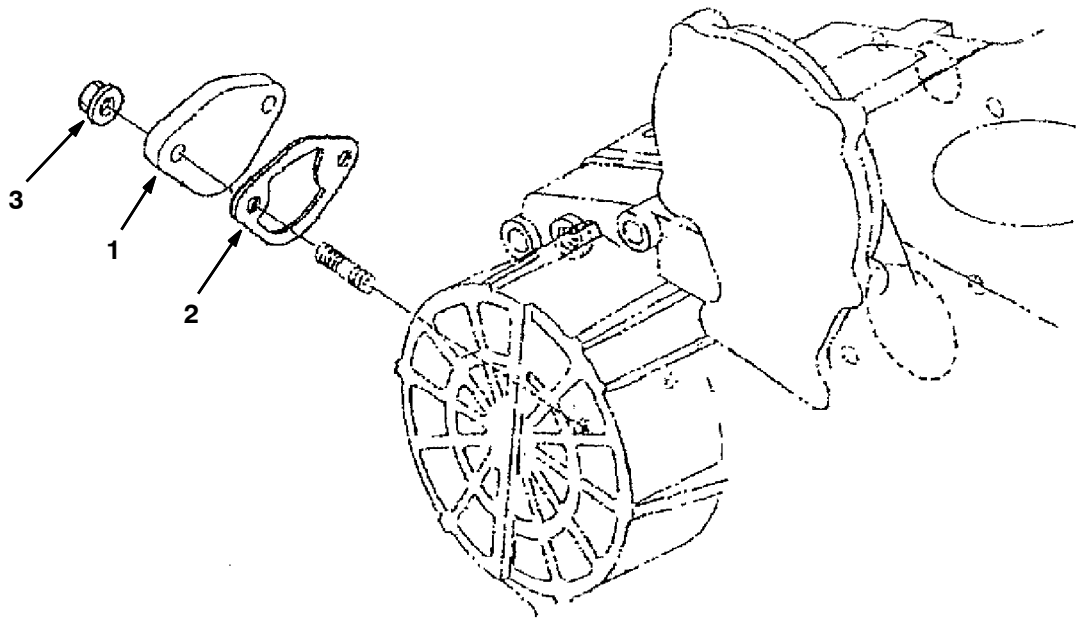

Ref.	Part No.	Description	Qty.
1	73565	Cover, Hole, Pump, Fuel [Ku]	1
2	375059	Gasket, Pump, Fuel [Ku]	1
3	9005029	Nut, Flange [Ku]	2

Fig. 11 - Dipstick and Guide Group

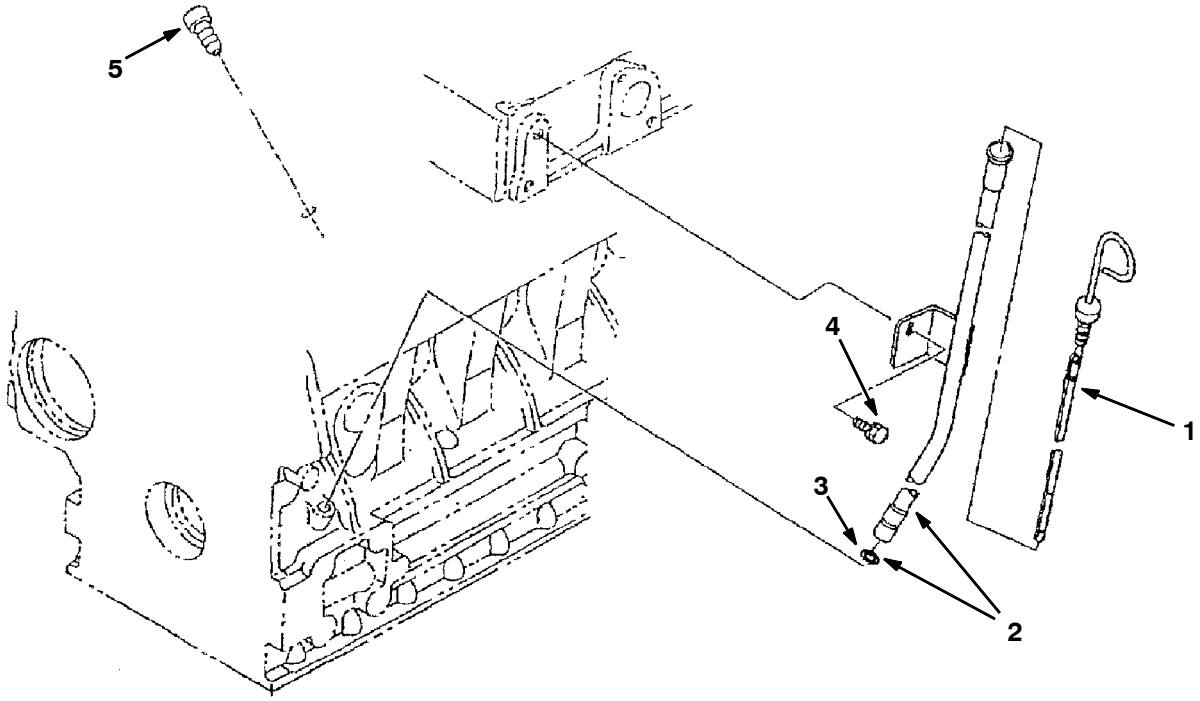

	Ref.	Part No.	Description	Qty.
	1	70893	Dipstick [Ku]	1
▽	2	361428	Dipstick, Oil [Ku]	1
▲	3	361366	O- Ring	1
	4	393614	Bolt	1
	5	9004348	Plug, Gauge, Oil [Ku]	1

Fig. 12 - Main Bearing Case Group

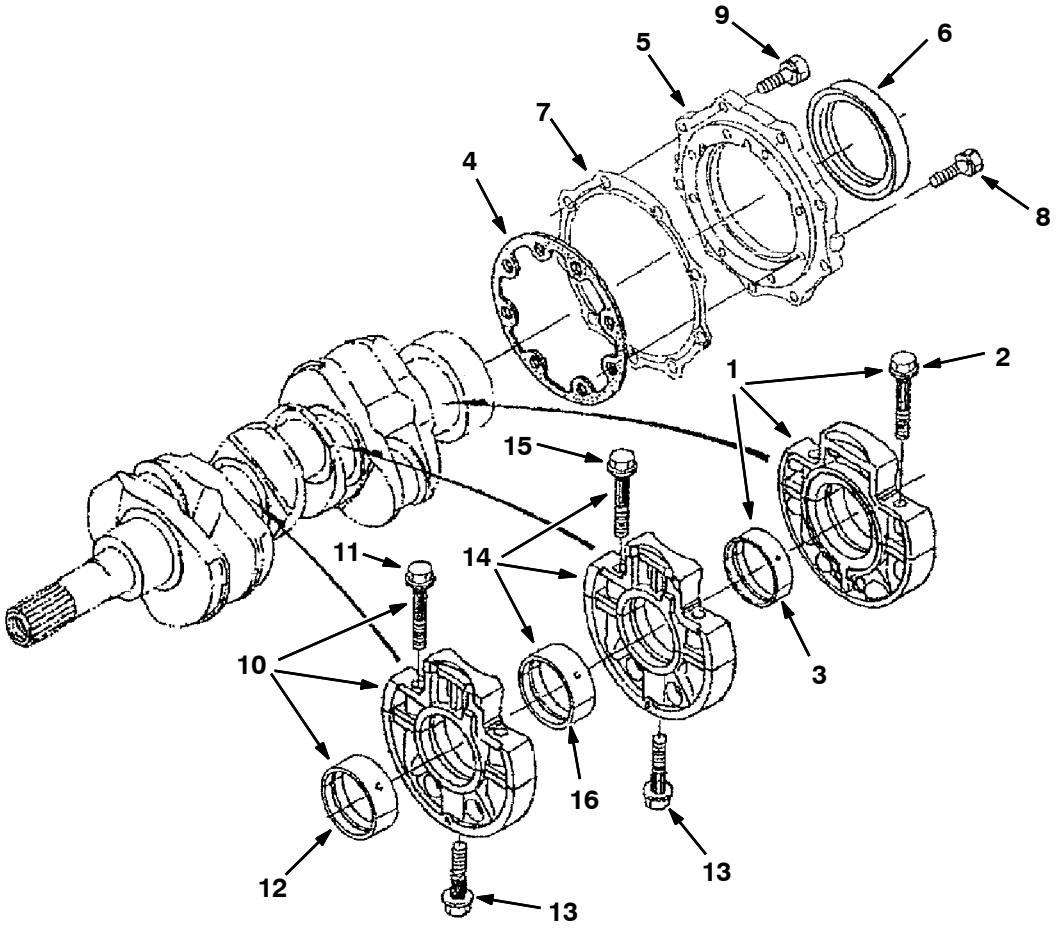

	Ref.	Part No.	Description	Qty.
▽	1	9004349	Bearing, Case [Ku]	1
▲	2	72998	Screw, Hex, Case, Brg, Main [Ku]	2
▲	3	9004436	Crankshaft, Metal [Ku]	1
▲	3	9005008	Bearing, Cshft, - .2mm [Ku]	1
▲	3	9005009	Bearing, Cshft, - .4mm [Ku]	1
	4	9004350	Gasket, Bearing, Case [Ku]	1
	5	70923	Cover, Brg Case, Eng [Ku]	1
	6	9004351	Seal, Oil [Ku]	1
	7	70925	Gasket, Case, Gear [Ku]	1
	8	72999	Screw, Hex [Ku]	8
	9	371017	Bolt	9
▽	10	9004437	Case, Main, Brg Assy	1
▲	11	72998	Screw, Hex, Case, Brg, Main [Ku]	2
▲	12	70948	Bearing, Cshft, Std [Ku]	1
▲	12	70949	Bearing, Cshft, - .2mm [Ku]	1
▲	12	70950	Bearing, Cshft [Ku]	1
	13	73479	Screw, Hex, Case, Brg, Main [Ku]	2
▽	14	9004438	Case, Main, Brg Assy	1
▲	15	72998	Screw, Hex, Case, Brg, Main [Ku]	2
▲	16	70948	Bearing, Cshft, Std [Ku]	1
▲	16	70949	Bearing, Cshft, - .2mm [Ku]	1
▲	16	70950	Bearing, Cshft [Ku]	1

Fig. 13 - Camshaft Group

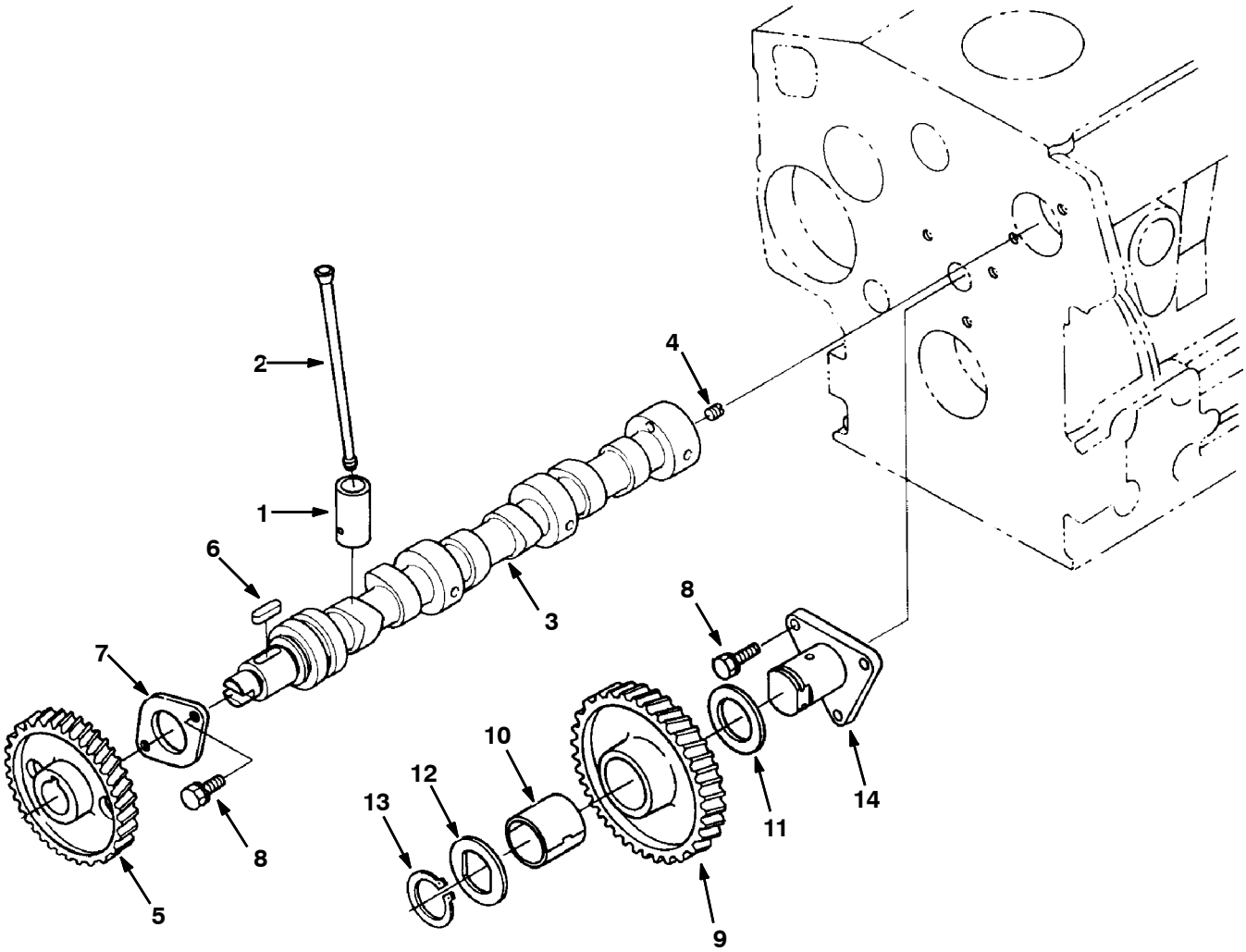

	Ref.	Part No.	Description	Qty.
	1	9004358	Tappet [Ku]	6
	2	73509	Push Rod	6
▽	3	9005010	Camshaft Assy [Ku]	1
▲	4	39197	Screw, Set	1
▲	5	73511	Gear, Camshaft	1
▲	6	73512	Keyway	1
▲	7	73513	Stopper	1
▲	8	41973	Bolt, Hex [Ku]	5
▽	9	73514	Gear, Idle	1
▲	10	73515	Bushing, Gear, Idler [Ku]	1
	11	73516	Collar, Gear	1
	12	70945	Bearing, Cshft, Std [Ku]	1
	13	73518	Cir- Clip, Gear	1
	14	73519	Shaft, Gear	1

Fig. 14 - Flywheel Group

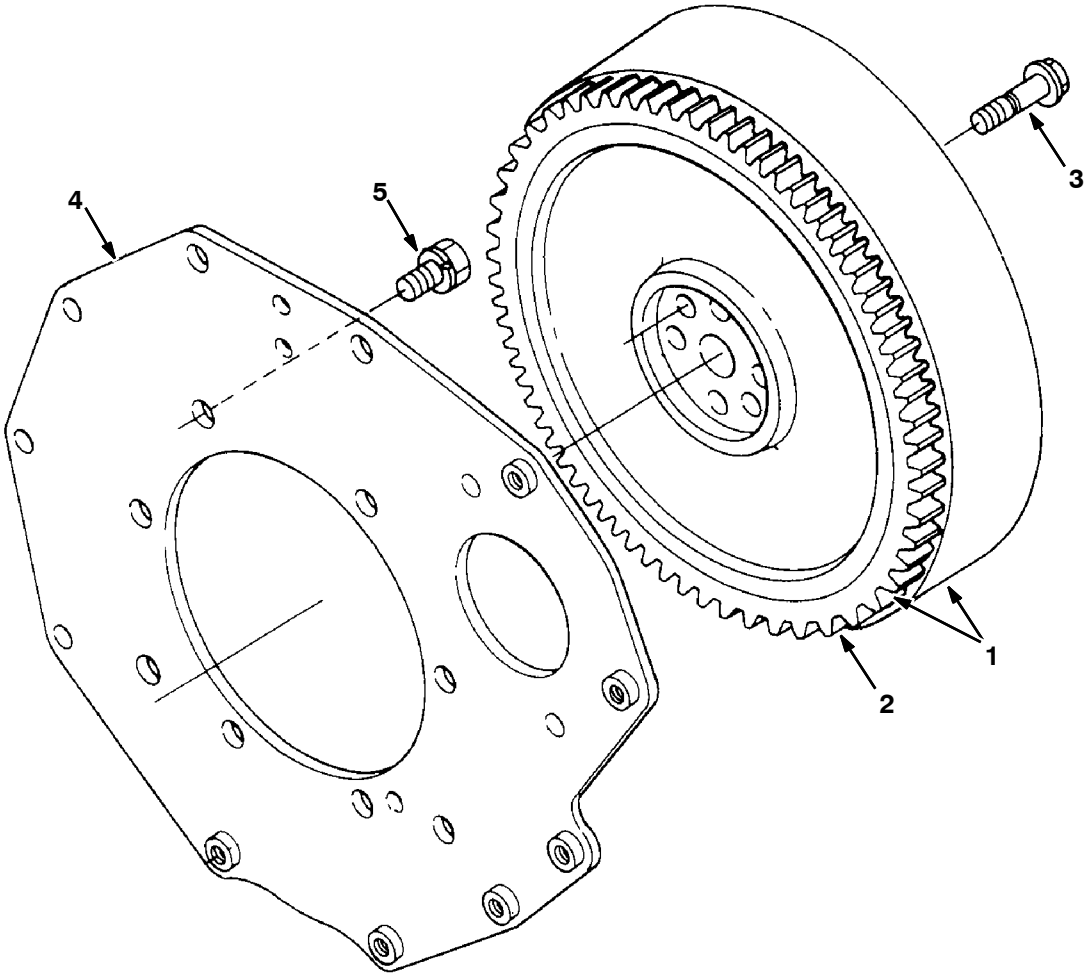

	Ref.	Part No.	Description	Qty.
▽	1	361435	Flywheel,Comp	1
▲	2	9004367	Gear, Ring [Ku]	1
	3	73533	Bolt, Flywheel	6
	4	361390	Plate,Rear End	1
	5	73534	Bolt	8

Fig. 15 - Fuel Camshaft Group

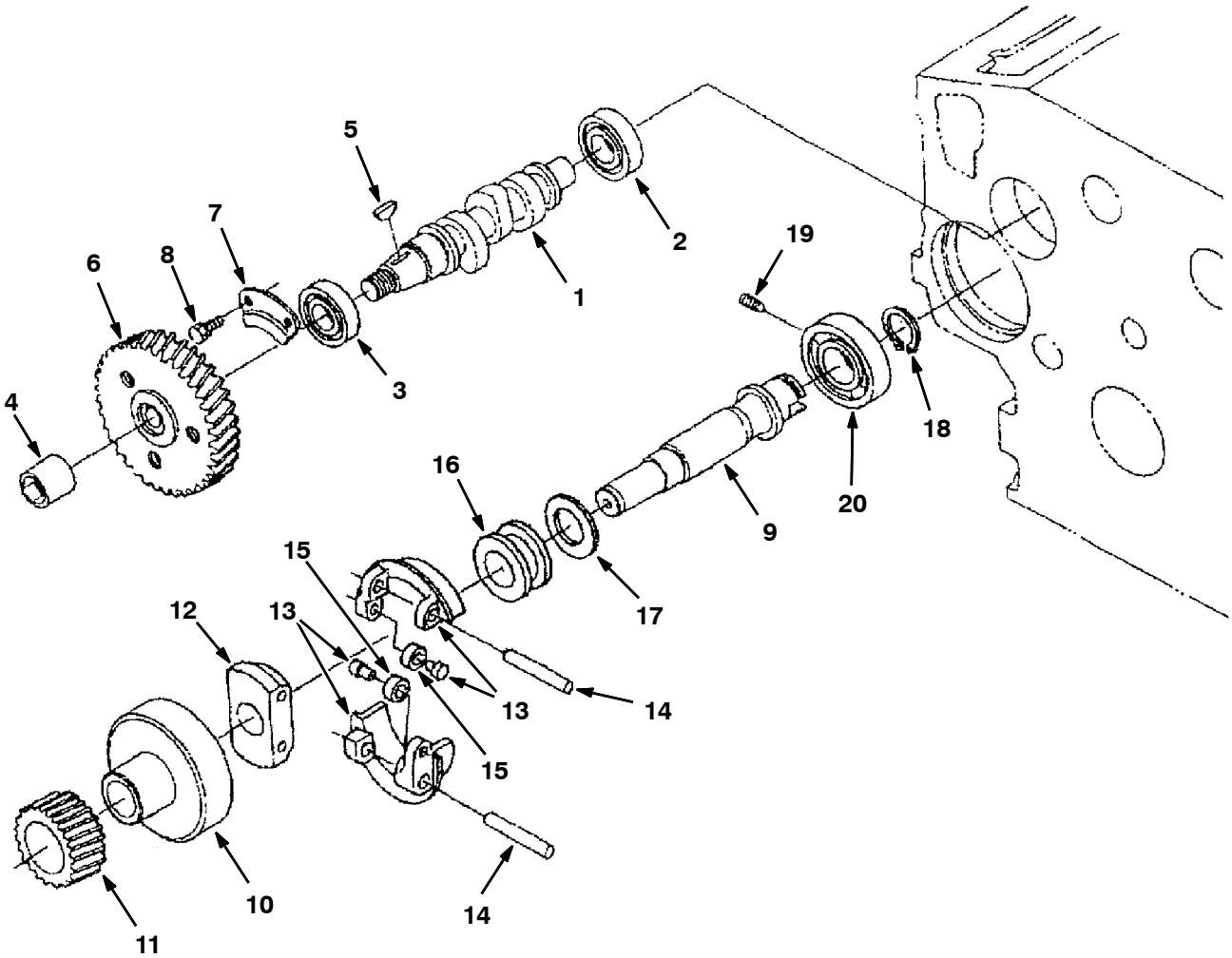

	Ref.	Part No.	Description	Qty.
	1	361377	Camshaft,Fuel	1
	2	9004368	Bearing, Ball [Ku]	1
	3	9004369	Bearing, Ball [Ku]	1
	4	73593	Nut, Cap	1
	5	73594	Key,Woodruff	1
	6	9004445	Gear, Injection, Pump [Ku]	1
	7	73596	Stopper	1
	8	41973	Bolt, Hex [Ku]	2
▽	9	361421	Shaft Assy,Gov	1
▲	10	73598	Holder,Gear	1
▲	11	73599	Gear,Governor	1
▲	12	73600	Holder	1
▲	13	73601	Comp.Weight	2
▲	14	73602	Shaft, Gov	2
▲	15	9004372	Shaft, Govnr, Weight [Ku]	2
▲	16	70977	Gov.Sleeve	1
▲	17	70978	Thrustwasher	1
	18	73603	Cir- Clip, Gov	1
	19	73604	Screw, Set	1
	20	70979	Bearing, Ball	1

Fig. 16 - Engine Stop Lever Group

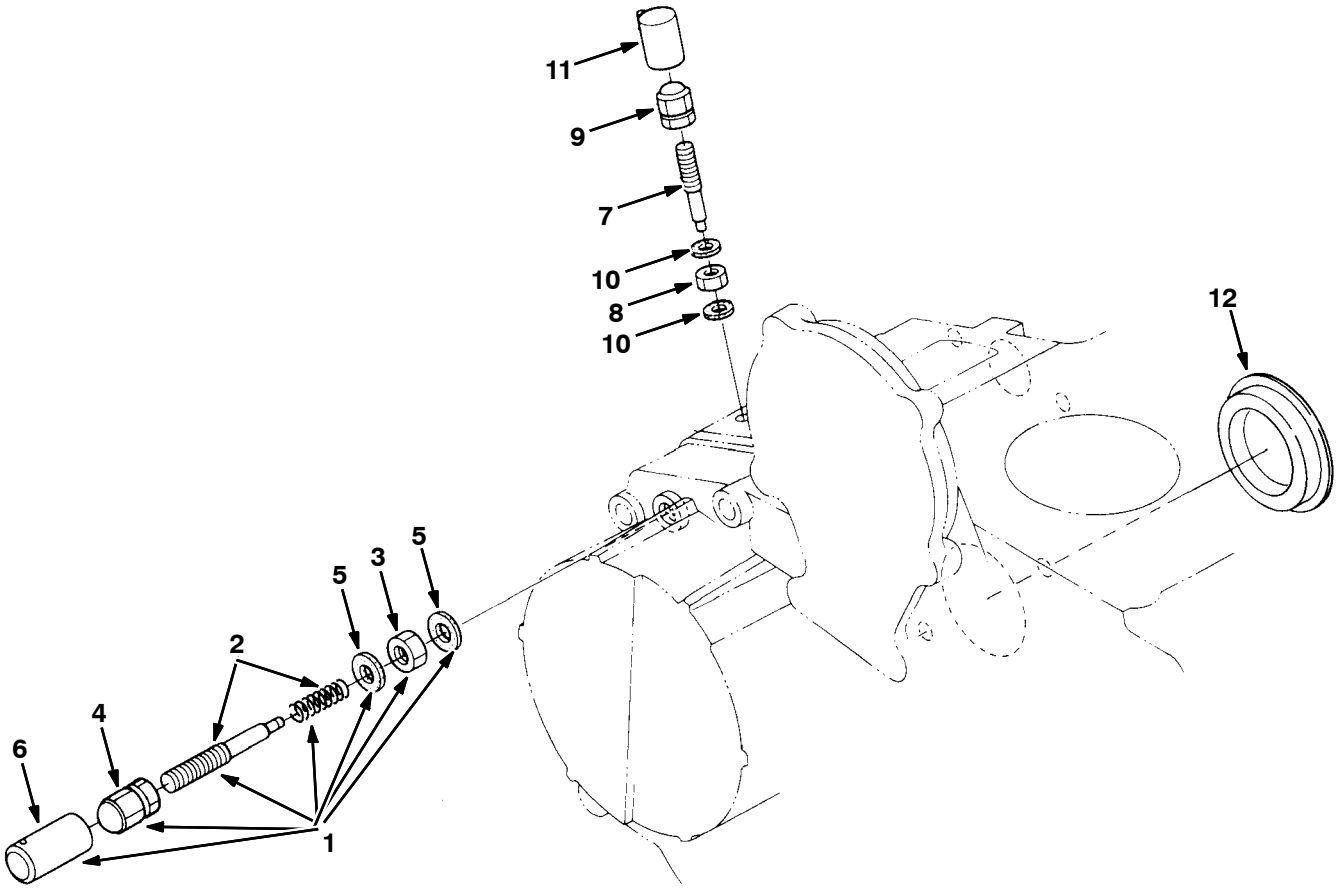

	Ref.	Part No.	Description	Qty.
▽	1	70980	Idle App.Assy	1
▲	2	73605	Bolt, Assy, Adj	1
▲	3	73606	Nut	1
▲	4	361375	Nut,Cap	1
▲	5	40166	Gasket	2
▲	6	9005019	Cap, Screw, Idler [Ku]	1
	7	73610	Bolt, Adj	1
	8	73606	Nut	1
	9	361375	Nut,Cap	1
	10	40166	Gasket	2
	11	9004375	Gasket [Ku]	1
	12	70188	Cover, Pump	1

Fig. 17 - Stop Solenoid Group

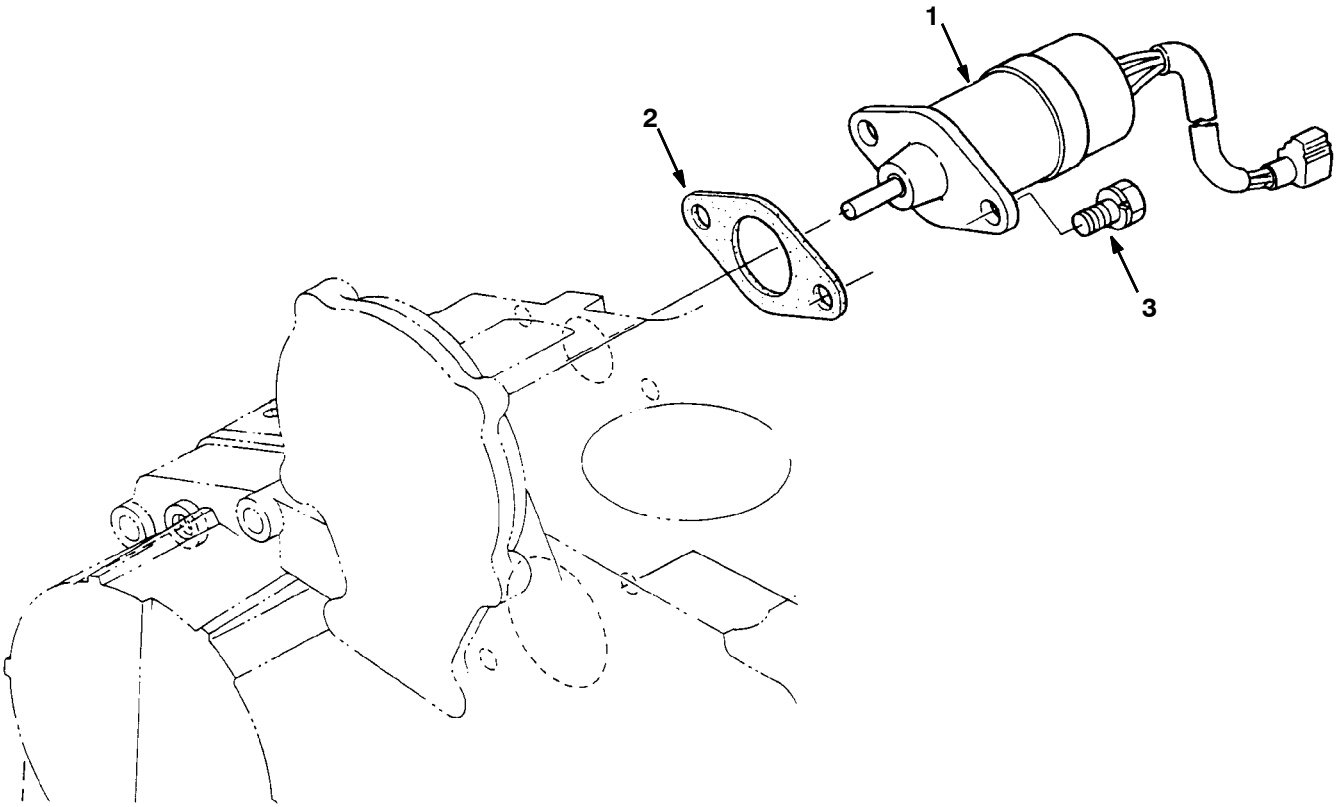

Ref.	Part No.	Description	Qty.
1	374269	Solenoid, Stop, Eng, Dsl, 12vdc [Ku]	1
2	70165	Gasket, Solenoid, Throttle [Ku]	1
3	9005020	Bolt, Hex [Ku]	2

Fig. 18 - Governor Group

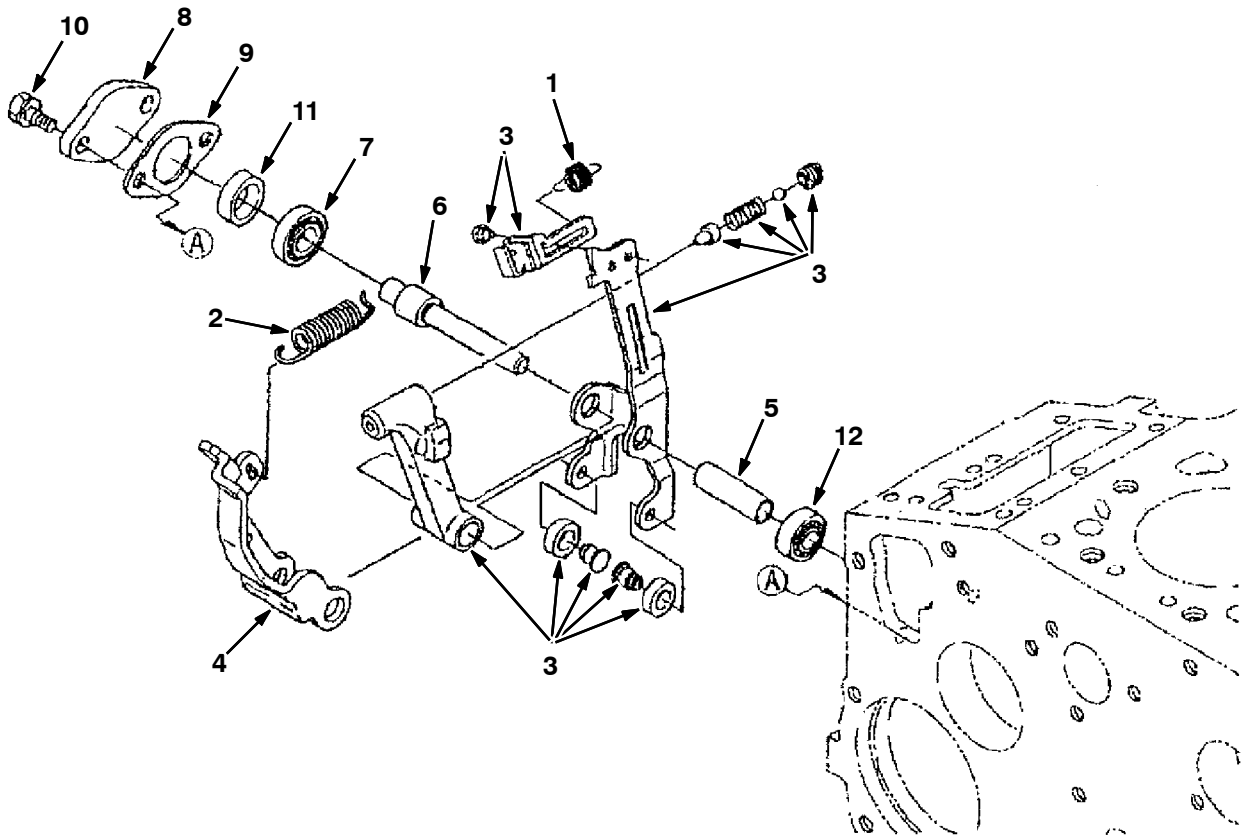

	Ref.	Part No.	Description	Qty.
	1	361417	Spring,Start	1
	2	70986	Gov.Spring	1
▽	3	9005024	Lever Assy, Fork, Govnr [Ku]	1
▲	4	9004381	Lever, Fork [Ku]	1
▲	5	9004382	Lever, Fork, Shaft [Ku]	1
▲	6	73629	Shaft, Lever	1
▲	7	70989	Ball Bearing	1
	8	73631	Cover, Lever	1
	9	361430	Gasket	1
	10	71995	Screw, Hex [Ku]	2
	11	70991	Collar	1
	12	70992	Ball Bearing	1

Fig. 19 - Speed Control Plate Group

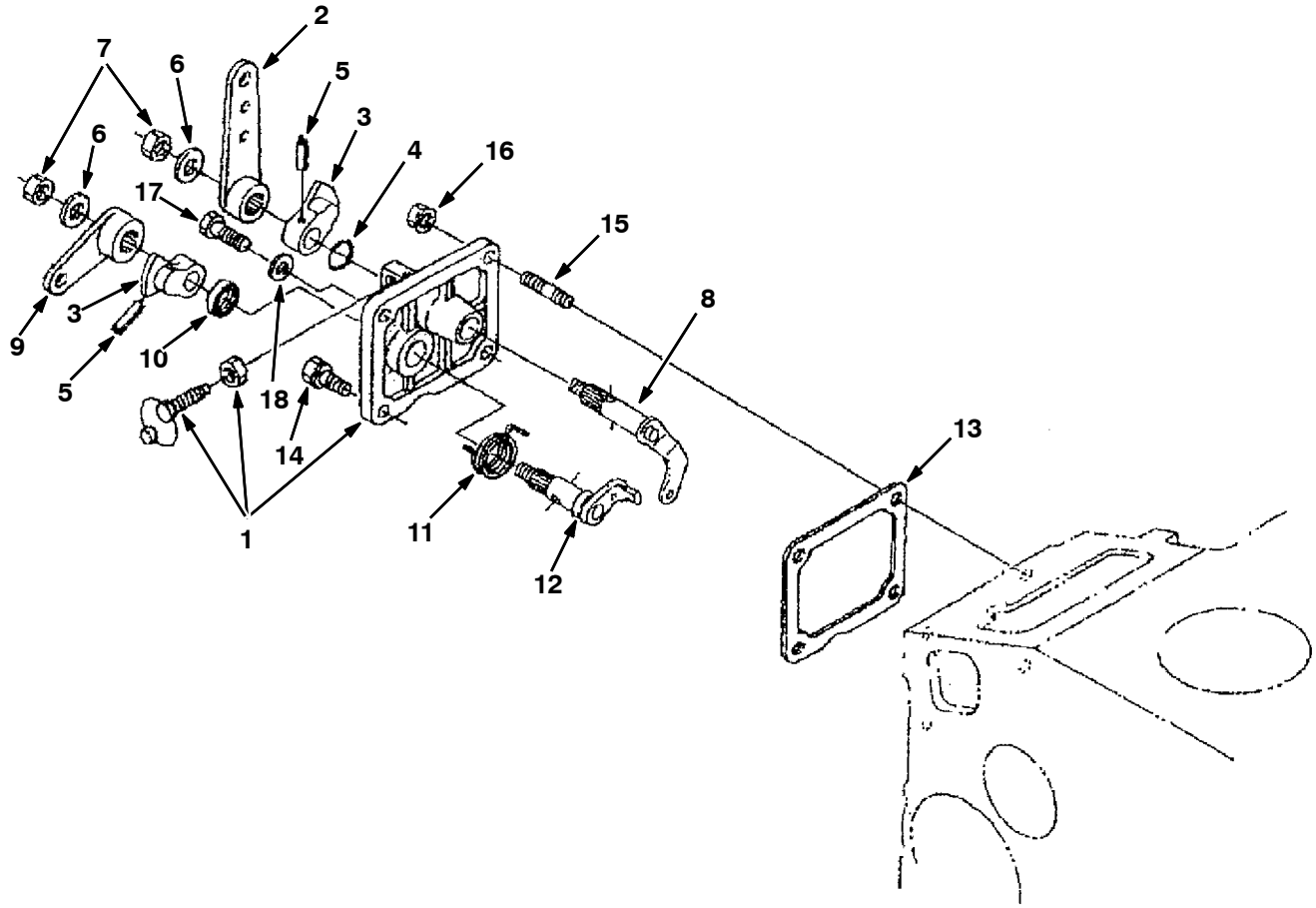

	Ref.	Part No.	Description	Qty.
▽	1	70982	Plate Assy, Control	1
▲	2	73618	Spd.Cntl.Lever	1
▲	3	73619	Spd.Cntl.Lever	2
▲	4	9004385	Seal, Org [Ku]	1
▲	5	9004410	Pin, Spring [Ku]	2
▲	6	73621	Washer, Plain	2
▲	7	73622	Nut	2
▲	8	73623	Lever, Comp	1
▲	9	73624	Lever, Eng Stop	1
▲	10	70983	Oil Seal	1
▲	11	73625	Spring, Return	1
▲	12	73626	Shaft, Lever	1
	13	70984	Gasket	1
	14	71995	Screw, Hex [Ku]	2
	15	9004347	Stud [Ku]	2
	16	9005025	Nut, Hex , Flange[Ku]	2
	17	9004449	Bolt [Ku]	1
	18	40166	Gasket, F/ Bolt [Ku]	1

Fig. 20 - Nozzle Holder and Glow Plug Group

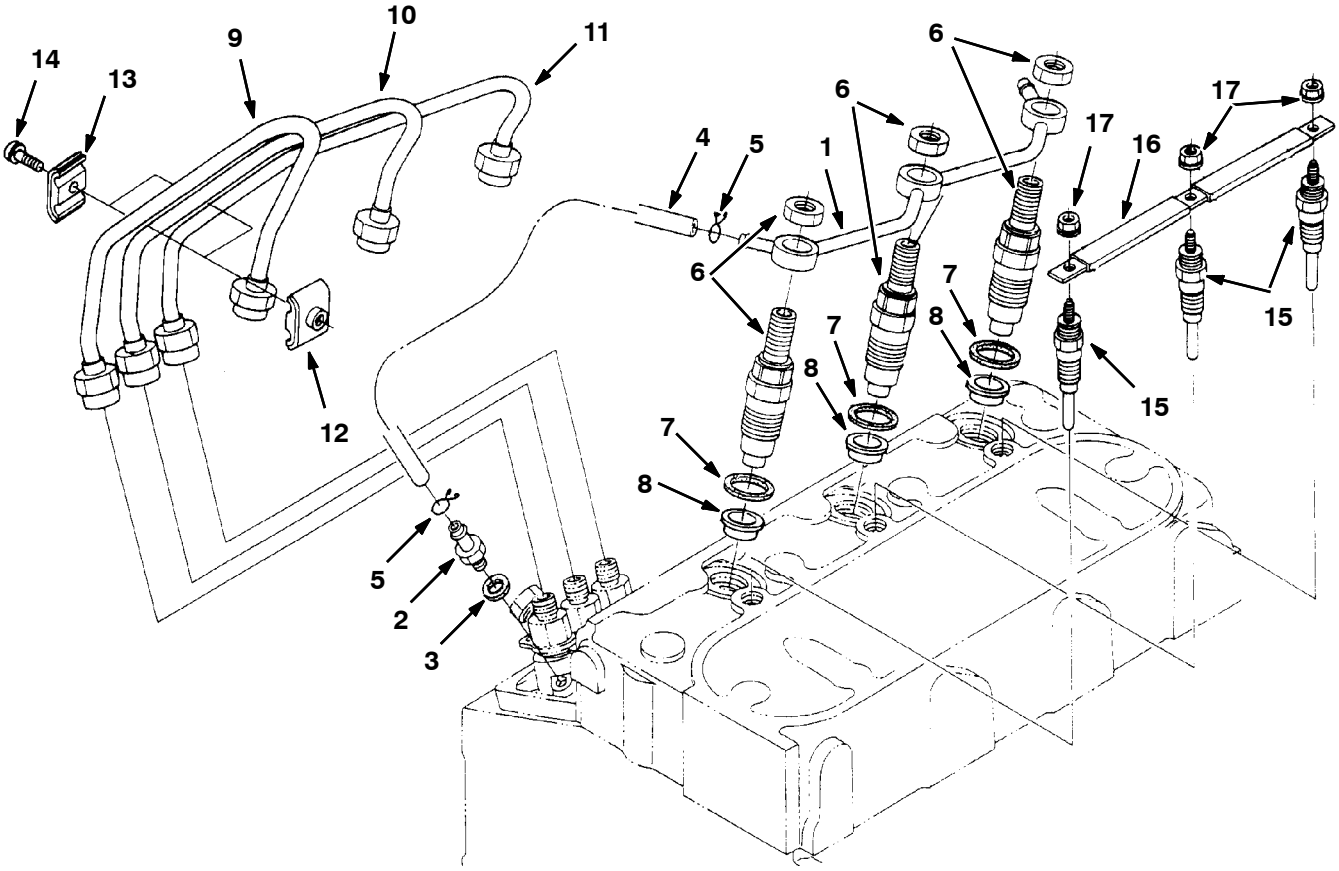

	Ref.	Part No.	Description	Qty.
	1	361415	Pipe Asy,Oflow	1
	2	73555	Screw	1
	3	40166	Gasket	1
▽		361373	Hose, Fuel [Ku]	1
▲	4	9004389	Pipe, Fuel, Overflow [Ku]	1
▲	5	9004390	Pipe, Clip [Ku]	2
	6	372917	Housing Assy, Nozzle	3
	7	70964	Gasket	3
	8	20719	Seal, Heat	3
	9	70965	Inject.Pipe 1	1
	10	70966	Inject.Pipe 2	1
	11	70967	Inject.Pipe 3	1
	12	9005026	Clamp, Tube, Inj, Pipe [Ku]	2
	13	9005027	Clamp, Tube, Inj, Pipe [Ku]	2
	14	39508	Screw	2
	15	9005028	Glowplug [Ku]	3
	16	361418	Cord,Glow Plug	1
	17	9004393	Nut, Flng [Ku]	3

Fig. 21 - Nozzle Holder Breakdown

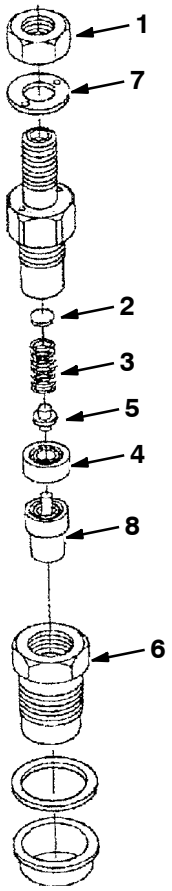

	Ref.	Part No.	Description	Qty.
▽		372917	Housing Assy, Nozzle	4
▲	1	9004395	Nut [Ku]	1
▲	2	9004396	Washer, Adjusting [Ku]	1
▲	3	9004397	Nozzle, Spring [Ku]	1
▲	4	388500	Spacer [Ku]	1
▲	5	9004398	Rod, Push [Ku]	1
▲	6	9004399	Nut, Nozzle [Ku]	1
▲	7	9004400	Washer, Plain [Ku]	1
▲	8	9004401	Nozzle [Ku]	1

Fig. 22 - Timer Group

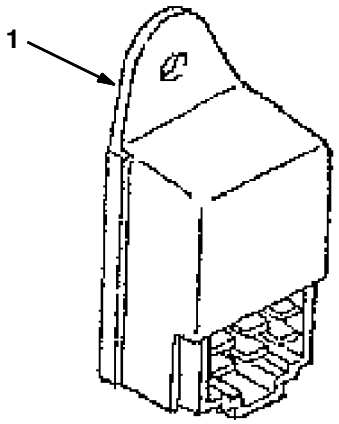

Ref.	Part No.	Description	Qty.
1	366026	Timer, Glow Plug [Ku]	1

Fig. 23 - Starter Group

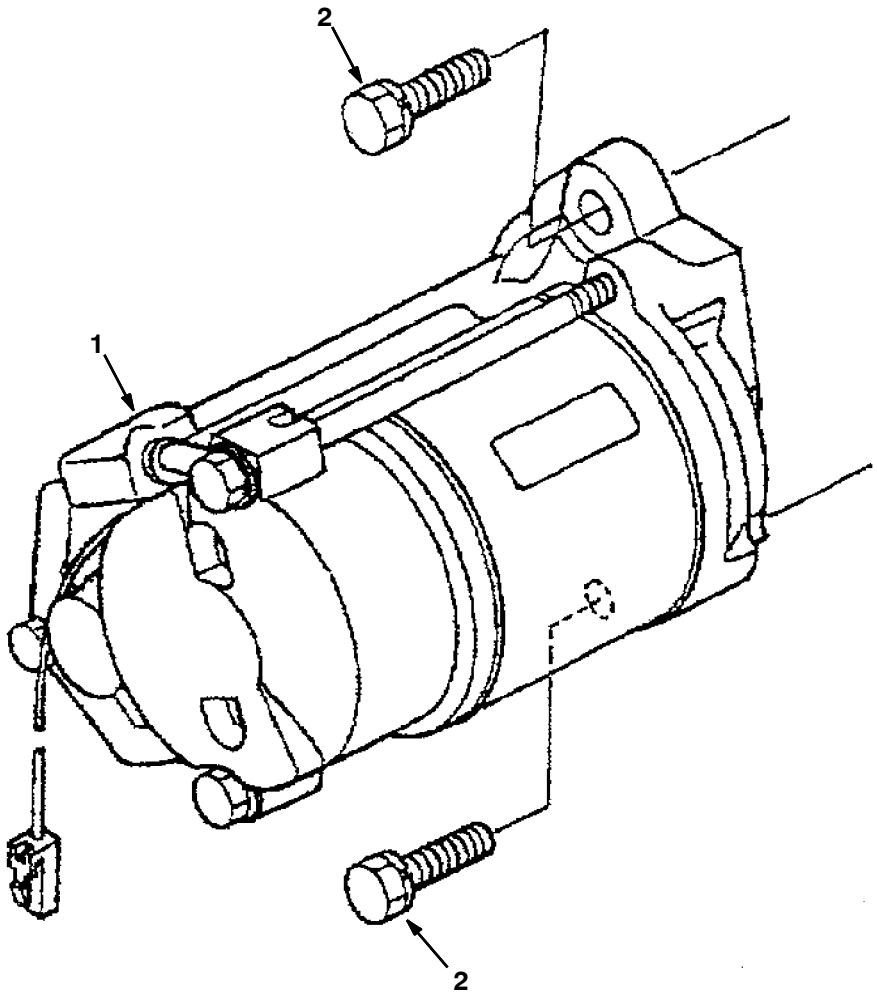

Ref.	Part No.	Description	Qty.
1	361349	Starter Assy (See Starter Breakdown)	1
2	73535	Bolt	2

Fig. 24 - Starter Breakdown

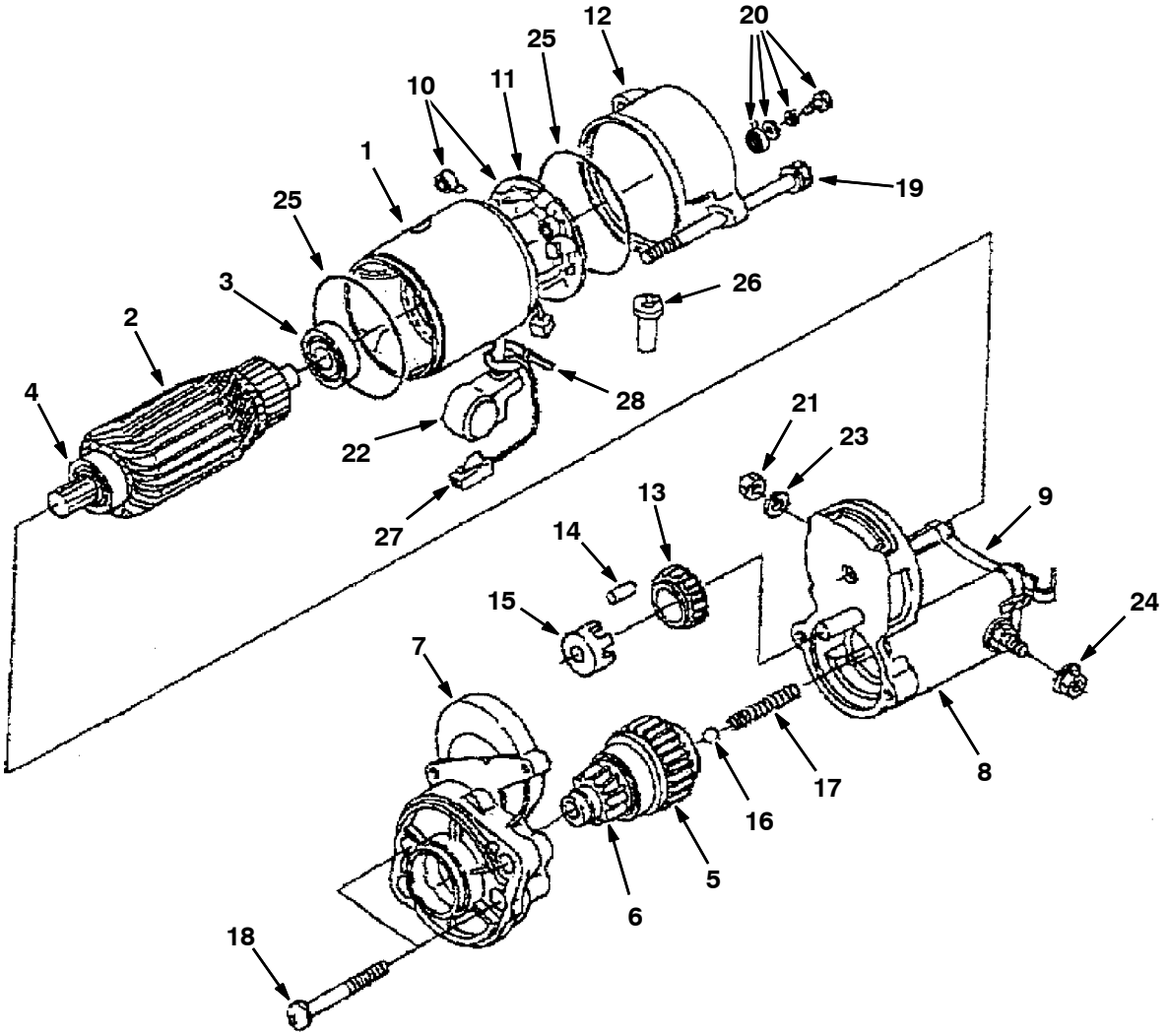

Fig. 24 - Starter Breakdown

	Ref.	Part No.	Description	Qty.
▽		361349	Assy, Starter	1
▲	1	9005033	Yoke, Starter [Ku]	1
▲▽	2	70197	Armature, Motor [Ku]	1
▲▲	3	70199	Bearing	1
▲▲	4	70198	Bearing	1
▲	5	9005034	Clutch, Starter [Ku]	1
▲	6	70962	Pinion, Bevel	1
▲	7	70201	Frame, End, Drive	1
▲▽	8	9005035	Solenoid, Starter [Ku]	1
▲▲	9	9005042	Cover [Ku]	1
▲▽	10	361352	Holder, Brush [Ku]	1
▲▲	11	70205	Spring, Brush	4
▲	12	9005037	Retainer, Gear, Starter [Ku]	1
▲	13	9005038	Gear, Starter [Ku]	1
▲	14	73544	Roller, Starter [Ku]	5
▲	15	70207	Retainer	1
▲	16	73546	Ball [Ku]	1
▲	17	70208	Spring	1
▲	18	70209	Bolt	2
▲	19	70210	Bolt	2
▲	20	20432	Bolt	2
▲	21	70212	Nut	1
▲	22	9005039	Boot, Wire, Starter [Ku]	1
▲	23	9005040	Washer, Spring [Ku]	1
▲	24	9005041	Nut, Hex [Ku]	1
▲	25	20433	Seal, Org	2
▲	26	70213	Tube, Drain, Starter	1
▲	27	368086	Wire, Solenoid, Starter [Ku]	1
▲	28	368084	Band, Cover [Ku]	1

Fig. 25 - Water Flange and Thermostat Group

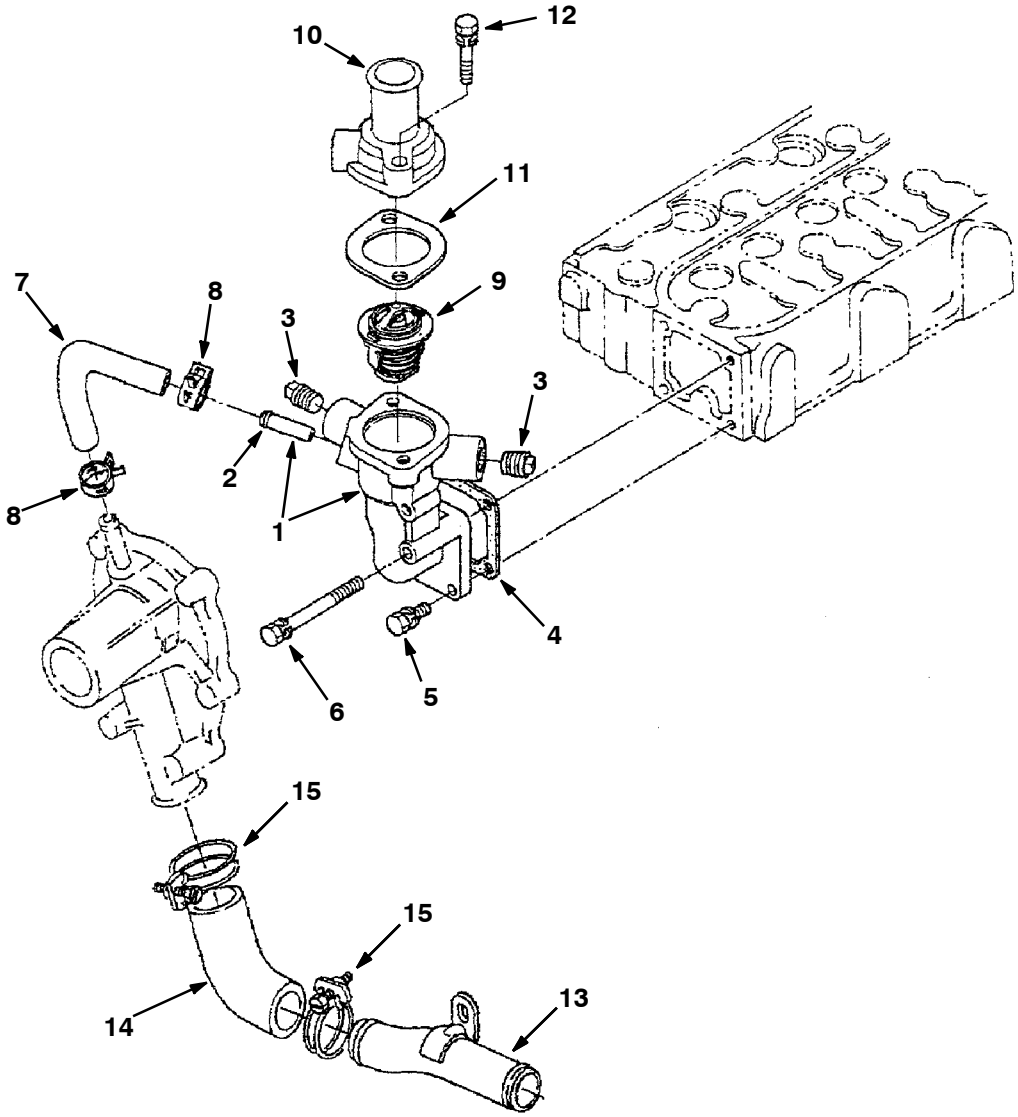

	Ref.	Part No.	Description	Qty.
▽	1	368090	Flange, Water [Ku]	1
▲	2	384859	Pipe, Water, Return	1
	3	9005043	Fitting, Pipe, Plug [Ku]	2
	4	70994	Gasket, Hsg, Thermostat [Ku]	1
	5	71995	Screw, Hex [Ku]	3
	6	72995	Screw, Hex [Ku]	1
	7	73633	Hose, Water [Ku]	1
	8	73634	Clamp, Hose, Heater [Ku]	2
	9	361654	Thermostat, 160deg, 1.7d [Ku]	1
	10	368091	Housing, Thermostat [Ku]	1
	11	10851	Gasket	1
	12	73535	Screw, Hex [Ku]	1
	13	365110	Pipe, Water [Ku]	1
	14	9003869	Pipe, Water [Kubota]	1
	15	9003870	Clamp [Kubota]	1

Fig. 26 - Water Pump Group

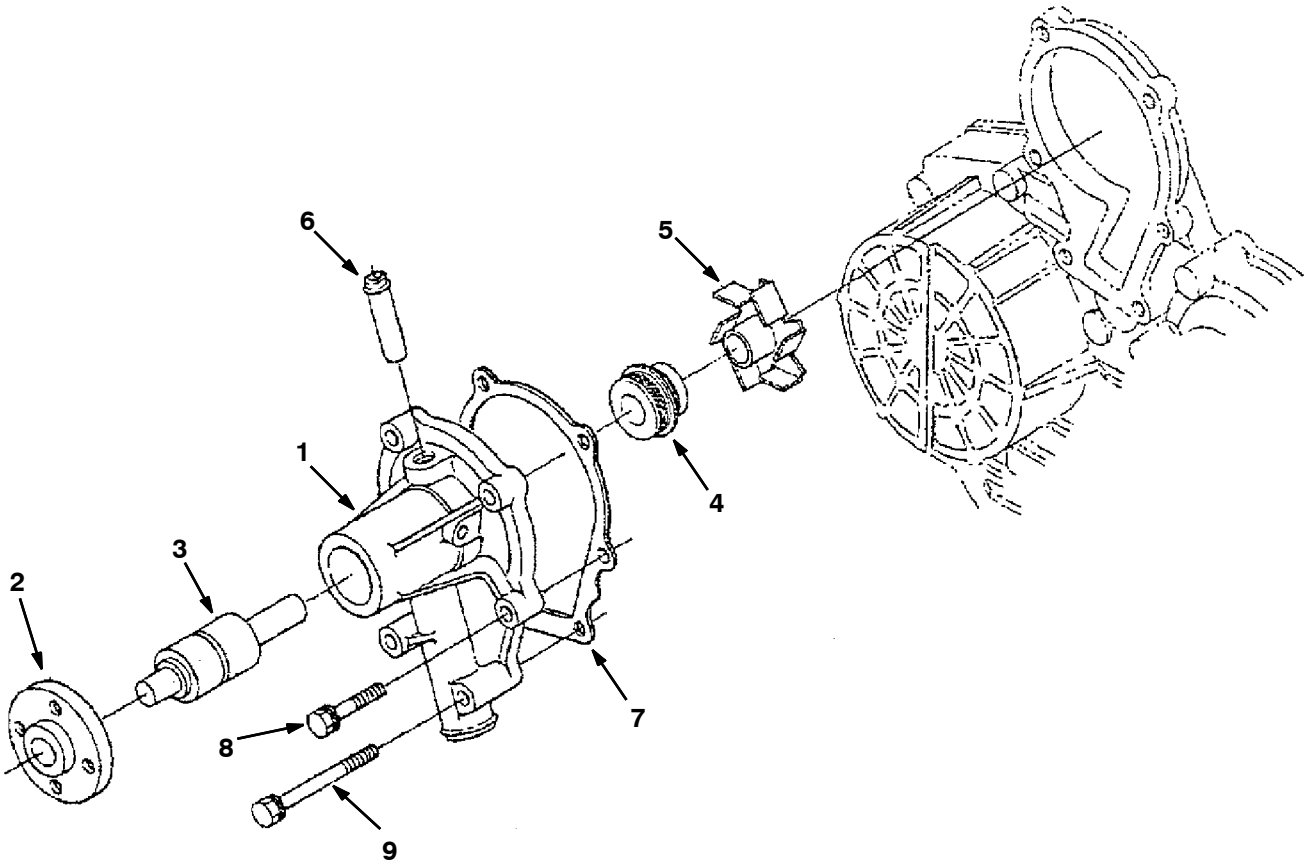

	Ref.	Part No.	Description	Qty.
▽	1	9004402	Pump Assy, Water [Ku]	1
▲	2	70919	Flange, Pump, Water [Ku]	1
▲	3	9004403	Bearing [Ku]	1
▲	4	9004404	Seal Assy [Ku]	1
▲	5	9004405	Impeller, Pump, Water [Ku]	1
	6	361440	Fitting, Pipe, Water [Ku]	1
	7	70920	Gasket, Pump, Water [Ku]	1
	8	9004406	Bolt [Ku]	4
	9	9004407	Bolt [Ku]	2

Fig. 27 - Alternator and Pulley Group

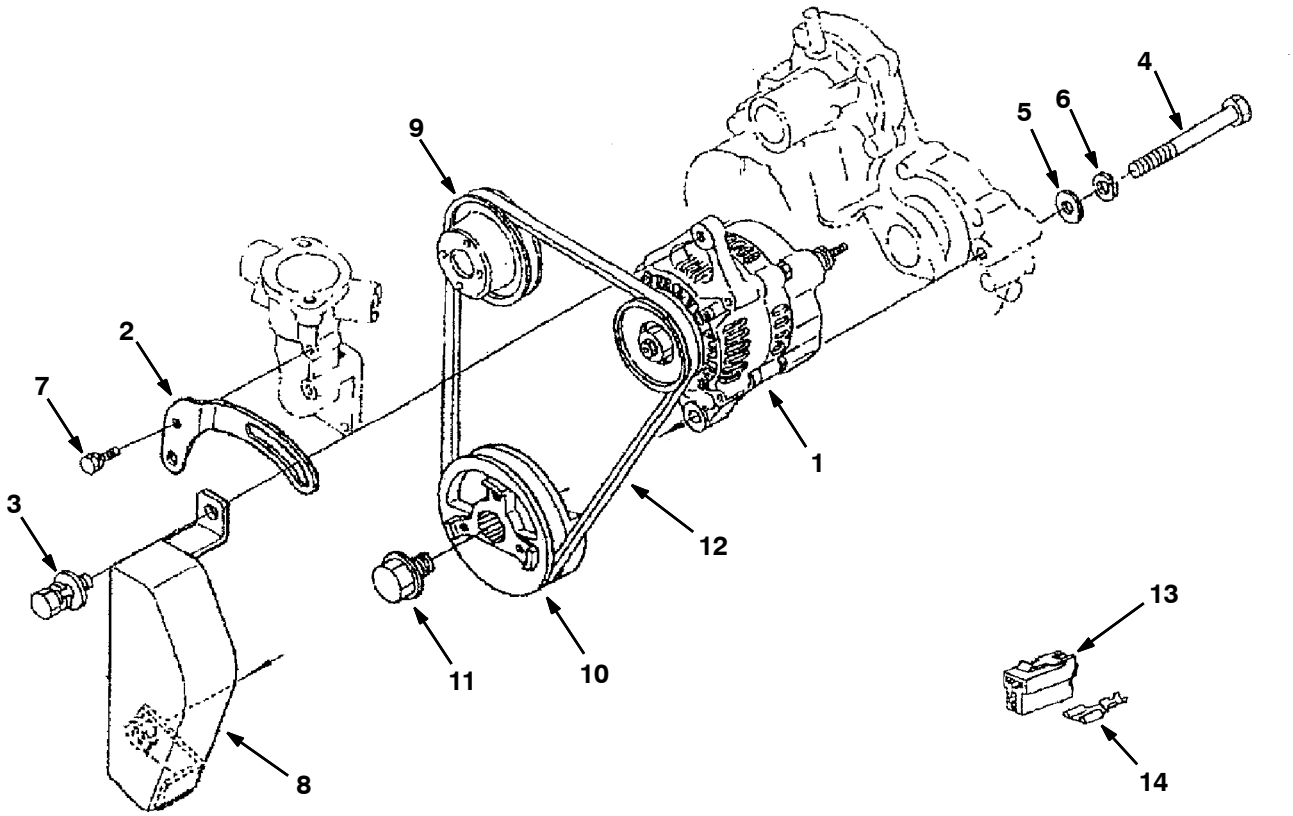

Ref.	Part No.	Description	Qty.
1	361387	Alternator	1
2	361399	Stay,Dynamo	1
3	9005030	Screw, Hex [Ku]	1
4	361360	Bolt	1
5	361364	Washer,Plain	1
6	9005031	Washer, Spring [Ku]	1
7	71995	Screw, Hex [Ku]	1
8	9005032	Guard, Belt [Ku]	1
9	55847	Sheave, Fan [Ku]	1
10	361386	Sheave, Cshft [Ku]	1
11	73532	Screw, Hex, Cshft [Ku]	1
12	368082	Belt, V, 9.5mm 37.4l [Ku]	1
13	368075	Connector, Blade, 2 Terminal [Altv]	1
14	368078	Terminal, Qf, .25	2

Fig. 28 - Fan Group

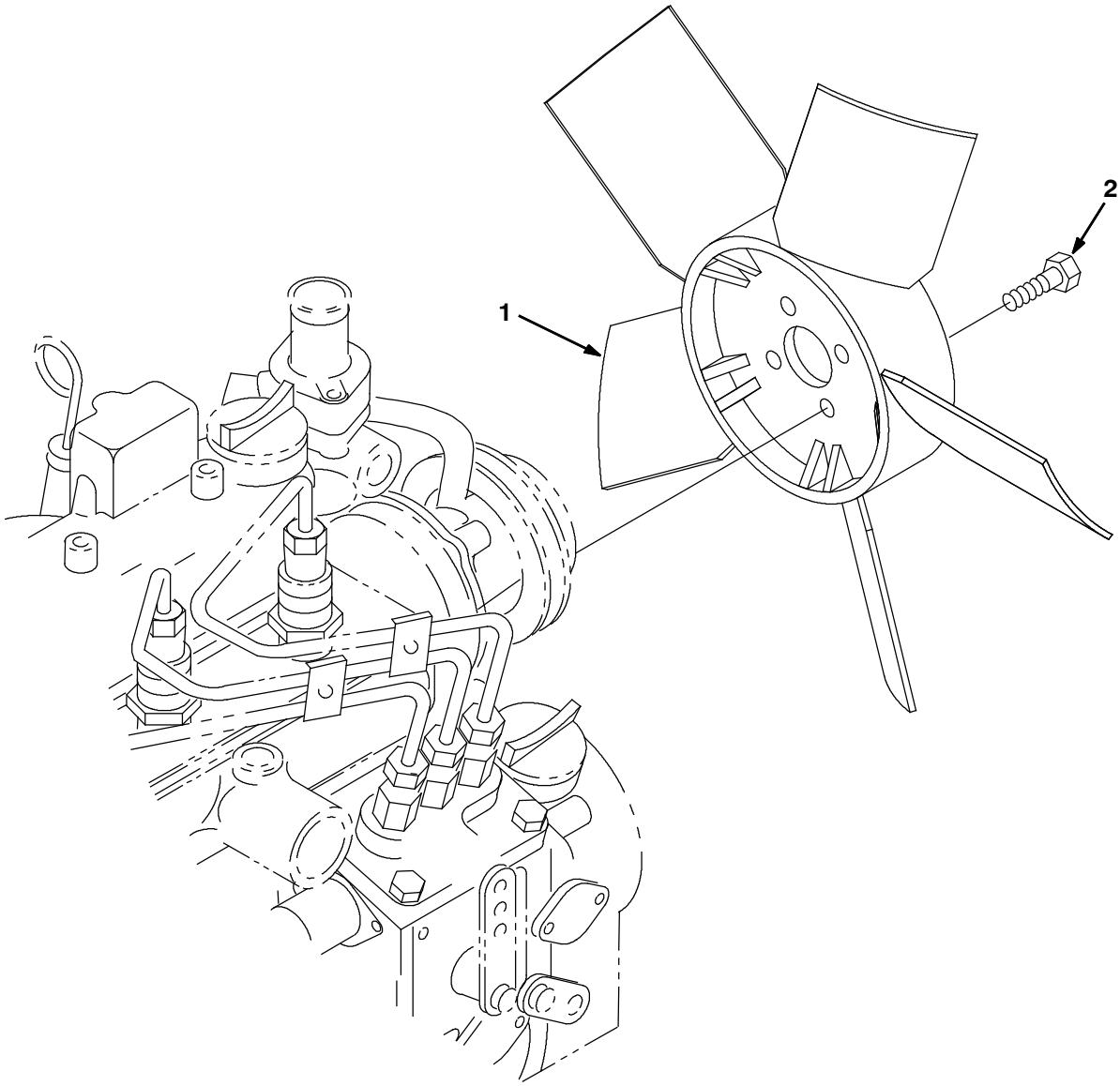

Ref.	Part No.	Description	Qty.
1	361626	Fan	1
2	393588	Bolt, Flng	4

Fig. 29 - Exhaust Manifold Group

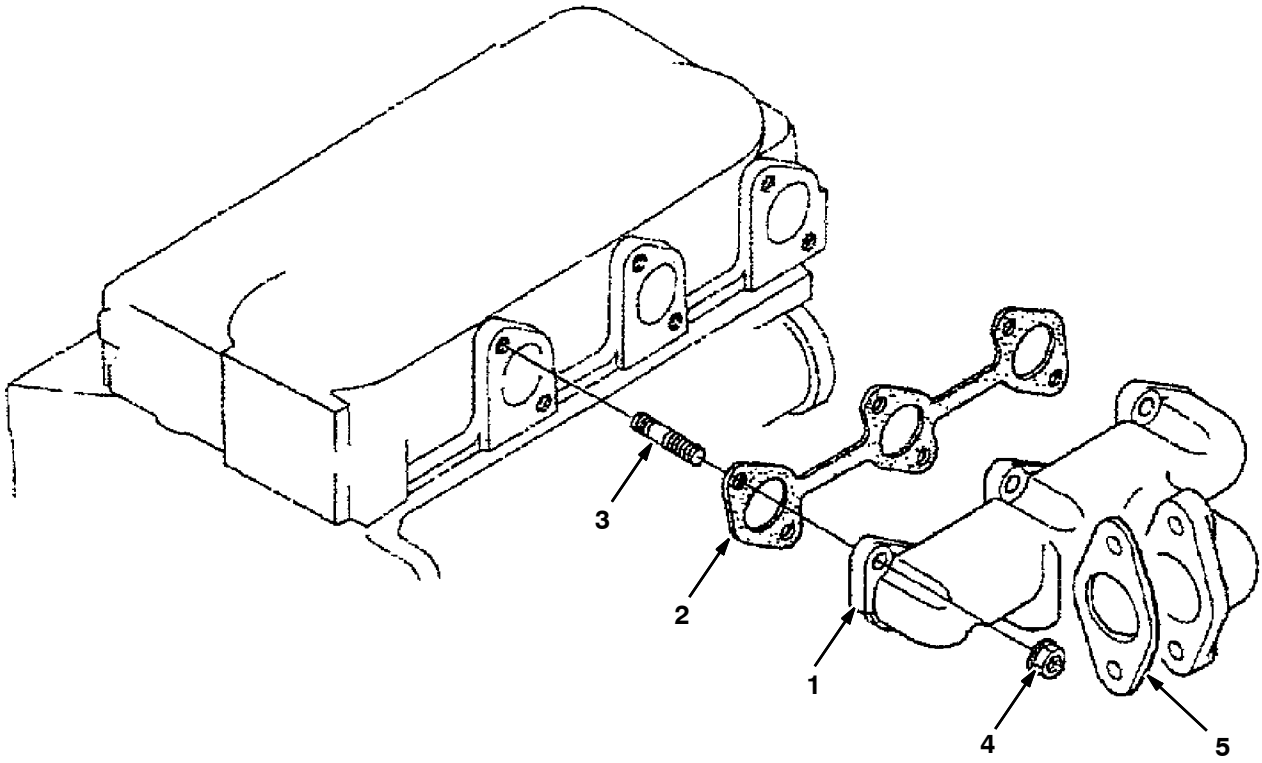

Ref.	Part No.	Description	Qty.
1	361420	Manifold,Exh	1
2	361407	Gskt,Ex- Manifol	1
3	73488	Stud	6
4	361427	Nut	6
5	368099	Gasket	1

Fig. 30 - Inlet Manifold Group

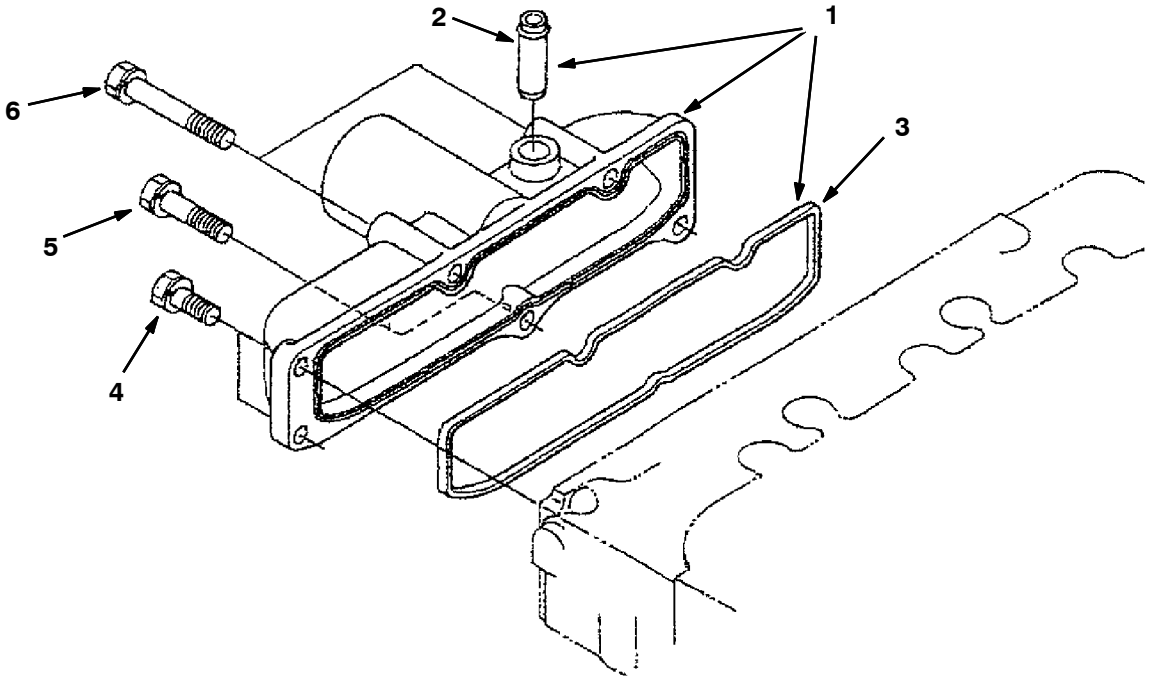

Ref.	Part No.	Description	Qty.
1	372910	Manifold Assy, Inlet	1
2	73481	Pipe, Breather [Ku]	1
3	361406	Gasket, Manifold, Intake [Ku]	1
4	71995	Screw, Hex [Ku]	3
5	9004406	Bolt [Ku]	1
6	72994	Screw, Hex [Ku]	2

SECTION 6

CONTENTS **PAGE**

PART NUMBER TO PAGE NUMBER CROSS REFERENCE LIST 6-2
PART DESCRIPTION TO PAGE NUMBER CROSS REFERENCE LIST 6-12

PART NUMBER TO PAGE NUMBER CROSS REFERENCE LIST

Part Number	Page Number
IB2561	4-9
SK2561	4-9
00500-10	2-53
00500-15	4-7
00954	2-53
01684	2-19, 3-23
01685	2-49, 2-71, 3-25
01714	2-73
01754	2-19, 2-57, 3-7, 3-9
01762	2-45
02431	2-5
02603	4-8
02645	4-8
02646	4-8
02647	4-8
02706	4-3
02850	2-67, 2-71, 3-3, 3-5, 3-7, 3-9, 3-15
02863	3-40
03026	2-27
03192	2-81
04375	2-65
04706	2-21
06415	2-59
06549	2-19, 2-39, 2-67, 3-3, 3-5, 3-7, 3-9, 3-15, 3-17
06750	2-81
06920	3-7, 3-9
06927	2-67, 3-3, 3-5, 3-7, 3-9, 3-15
06930	3-51
06933	3-3, 3-5, 3-7, 3-9
06935	3-17
06941	3-23
06942	2-23, 3-17
06943	2-51, 2-53, 3-3, 3-5, 3-7, 3-9, 3-11, 3-13, 3-63
06949	2-39, 2-85
06955	2-11, 2-13, 3-23
06956	2-43
06957	2-47, 2-55
06960	2-21
06961	2-69, 2-87, 3-20, 3-27
06964	2-41
06968	2-39, 3-70
06971	2-25
06972	2-23, 2-41
06977	2-45
06988	2-49, 3-25
07259	2-55
07471	3-55, 3-57
07514	2-71
07785	2-49, 3-23, 3-25
07790	2-23, 2-31, 2-53
07791	2-5, 2-11, 2-13, 2-19, 2-23, 2-25, 2-27, 2-29, 2-31, 2-37, 2-51, 2-55, 2-63, 2-67, 3-3, 3-5, 3-11, 3-13
07792	2-29, 2-55
07793	3-11, 3-13
07887	3-39
08013N	2-3
08085	2-11, 2-13, 2-49, 3-23, 3-25
08170	2-39
08175	2-45, 3-23
08179	2-51
08182	2-37, 2-39, 2-67
08298	2-57
08346	2-37, 2-51
08361	2-55
08708	2-15, 2-19, 2-21, 2-31, 2-39, 2-51, 2-53, 2-57, 2-59, 2-61, 2-63, 2-67, 2-85, 3-3, 3-5, 3-7, 3-9, 3-11, 3-13, 3-17, 3-39, 3-49, 3-53, 3-63
08709	2-5, 2-11, 2-13, 2-31, 2-33, 2-37, 2-39, 2-43, 2-45, 2-47, 2-55, 2-59, 2-65, 2-67, 2-69, 2-83, 3-3, 3-5, 3-7, 3-9, 3-17, 3-19, 3-23, 3-31, 3-33, 3-35, 3-37, 3-67
08711	2-23, 2-25, 2-39, 2-41, 2-45, 2-55
08713	2-49, 3-25
08714	2-41, 3-46, 3-47
08716	3-39
08793	2-67
09010	2-49, 3-25
09026	2-67
09028	2-49, 2-55
09087	2-51
09200	2-59, 2-61, 2-63
09228	3-15
09244	2-67
09252	3-15
09278	2-25
09740	2-5, 2-45, 3-31, 3-35
1002898	3-51
1006415	3-51
1008142	2-19
1011170	3-51
10143	2-35
1014563	2-59, 2-61, 2-67
1014976	3-51, 3-55, 3-57
1014981	3-57
1015455	3-55, 3-57
1016827	2-31
1017126	1-1, 2-31
1017141	2-98
1017255	3-57
1019285	3-51
1020341	2-7, 2-9, 2-29, 2-39, 2-55, 3-7, 3-9, 3-67
1021327	2-61
1023920	3-17
1024478	2-21
1027321	2-77
1028492	2-41
1030985	2-19, 3-59
1031617	3-15
1031670	4-8
1031699	3-51
1032812	2-31
1035826	2-47, 2-49, 3-23, 3-25
10362	2-53
1036203	3-29
1036801	3-51
1036892	2-17, 2-21, 2-31, 2-45, 2-57, 2-63, 2-67, 3-3, 3-5, 3-7, 3-9
1036903	2-77
1037345	2-31, 3-51
1037346	2-5, 2-9, 2-11, 2-13, 2-15, 2-17, 2-19, 2-29, 2-31, 2-37, 2-41, 2-63, 2-67, 2-69, 2-71, 3-3, 3-5, 3-7, 3-9, 3-15, 3-23, 3-31, 3-33, 3-35, 3-37, 3-51, 3-55, 3-57, 3-65
1037354	2-5, 2-19, 2-23, 2-31, 2-43, 2-51, 2-59, 2-67, 2-83, 3-11, 3-13, 3-33, 3-37, 3-67
1037355	2-27, 2-37, 2-39, 2-55, 2-59, 2-61, 2-69, 3-17, 3-31
1037358	2-25, 2-29, 2-35, 2-53, 2-59, 2-61, 2-65, 3-21, 3-25, 3-51
1037427	2-49
1037485	2-49
1037973	2-23
1038176	2-67
1039250	2-69

Part Number	Page Number
1039735	2-39, 3-3, 3-5, 3-7, 3-9
1040467	2-53, 3-3, 3-5, 3-7, 3-9, 3-31, 3-35
1040629	3-29
1041869	2-29
1041941	3-29
1042282	2-69
1042285	2-69
1042727	3-25
1042730	3-25
1042791	2-5
1042875	2-59, 2-61
1043049	3-29
1043176	3-21
1043352	2-23
1043383	2-69
1043490	2-59
1043815	2-69
1043818	2-71
1043819	2-71
1043938	2-63
1044075	3-13
1044146	2-71
1044214	2-63
1044254	2-59, 2-61
1044273	2-67
1044285	2-69
1044351	2-69, 2-71
1044352	2-71
1044356	1-1, 2-71, 3-65
1044357	1-1, 2-51
1044372	2-5
1044844	2-7
1044845	2-9
1044900	2-59, 2-61
1044907	2-59
1045211	2-19
1045222	2-21
1045229	2-11
1045365	2-59, 2-61
1045404	3-17
1045423	2-63
1045434	2-63
1045475	3-23
1045478	2-77
1045493	2-59, 2-61
1045524	2-27
1045563	3-23
1045567	3-15
1045569	3-15
1045571	3-23
1045627	2-51
1045645	3-3, 3-5, 3-7, 3-9
1045647	3-23
1045707	2-77
1045764	2-29
1045768	2-97
1045822	2-21, 4-13
1045853	3-27, 4-15
1045900	1-1, 2-71
1045923	2-19
1045993	2-81, 4-3
1046037	3-23
1046046	2-73
1046055	2-23
1046155	2-77
1046156	2-77
1046246	2-49
1046248	3-25
1046302	2-27
1046406	3-11, 3-13
1046410	3-63
1046498	3-23
1046553	2-39
1046590	2-51
1046635	2-73, 3-3, 3-5, 3-7, 3-9
1046687	2-87, 4-14
1047115	3-21
1047116	3-21
1047280	2-67
1047447	2-11
1047456	3-15
1047480	3-11, 3-13
1047564	2-25
1047575	1-1, 2-59
1047578	2-77
1047592	3-15
1047632	3-39
1047635	3-39
1047653	3-15
1047676	2-77
1047690	3-15
1047696	3-31, 3-35
1047703	2-31
1047704	3-11, 3-13
1047705	3-11, 3-13
1047706	3-15
1047709	2-77
1047717	2-97
1047728	3-17
1047773	3-31, 3-33, 3-35, 3-37
1047878	2-47
1048063	2-61
1048142	2-39
1048161	3-17
1048166	3-17
1048198	2-11
1048222	3-15
1048274	2-51
1048311	2-49, 3-25
1048335	2-71, 3-65
1048351	2-21
1048353	2-71, 3-65
1048408	3-21
1048422	2-83
1048456	2-19
1048477	2-23
1048489	2-29
1048501	2-29
1048504	2-97
1048508	2-37
1048519	2-61
1048522	3-15
1048526	3-26
1048541	2-25
1048556	3-23
1048639	3-15
1048640	3-15
1048718	3-35
1048720	3-31, 3-35
1048732	2-59
1048733	2-33
1048744	2-45
1048746	2-7, 2-9
1048750	2-7, 2-9
1048751	2-9
1048785	3-35
1048787	2-31
1048789	2-31
1048791	2-31
1048800	2-45
1048801	2-43
1048840	2-25
1048843	2-33
1048849	3-15
1048856	2-23
1048857	2-23
1048865	2-31
1048883	3-31
1048955	2-11, 2-13
1048990	2-59, 2-61
1049102	2-59, 2-61
1049253	2-59, 2-61
1049259	3-51
1049263	2-59, 2-61
1049296	2-23
1049408	2-69
1049409	2-69
1049553	3-3, 3-5
1049554	3-3, 3-5, 3-67
1049580	2-31, 2-83
1049687	3-17
1049702	3-15
1049734	3-15, 3-67
1049735	2-19
1049781	3-15
1049795	2-77
1049860	2-71
1049908	1-1, 2-53
1049937	3-13
1049938	3-13
1049982	2-69
1049987	2-11, 2-13
1049988	2-11, 2-13
1049990	3-11, 3-13
1049991	3-11, 3-13
1049992	3-11, 3-13

Part Number	Page Number
1050046	3-7, 3-9
1050106	2-69, 2-71
1050162	3-15
1050165	2-53
1050170	2-98
1050242	2-67
1050243	2-67
1050244	2-53
1050249	2-53
1050409	2-61
1050412	2-61
1050417	2-61
1050423	2-53
1050424	2-53
1050425	2-53
1050426	2-53
1050723	2-98
1050757	2-23
1050780	4-14, 4-15
1050785	2-11, 2-13
1050888	2-19
1051045	2-67
1051049	2-67
1051115	2-67
1051124	2-19
1051199	2-69
1051250	2-5
1051572	2-77
1051766	2-67
1051773	2-67
1051779	3-7, 3-9
1051788	3-3, 3-5
1052026	3-51
1052049	2-25
1052113	2-39
1052114	2-39
1052203	2-55
1052231	2-55
1052263	2-39
1052435	2-19
1052446	2-67
1052452	2-59
1052454	2-59
1052521	2-41
1052522	2-41
1052523	2-41
1052524	2-77
1052527	2-77
1052550	2-37
1052553	2-37
1052557	2-37
1052558	2-37
1052559	2-37
1052585	2-31
1052620	3-39
1052644	2-53
1052652	2-51
1052653	2-51
1052670	3-29
1052763	2-53
1052803	2-15
1052804	2-15
1052805	2-15
1052806	3-40
1052808	3-17
1052817	2-15
1052885	2-67
1052919	2-69
1053068	3-17
1053233	3-11, 3-13
1053291	2-71
1053318	2-59
1053321	2-71
1053385	3-15
1053746	2-55
1054045	2-45
1054106	2-57
1054256	2-49, 3-25
1054369	3-31, 3-33, 3-35, 3-37
1054371	3-31, 3-35
1054374	3-35
1054391	3-31, 3-35
1054559	2-29
1054567	3-31, 3-35
1054619	2-5
1054620	2-5
1054625	3-31
1054872	2-19, 2-57
1054873	3-23
1054874	2-19
1054875	2-19, 2-39
1055049	2-43
1055074	2-43
1055164	2-31
1055453	2-57
1055583	2-67
1055605	2-5
1055606	3-15
1055757	3-11, 3-13
1056045	2-11, 2-13
1056194	2-61
1056205	2-9
1056206	2-9
1056298	2-71
1056539	3-19
1056543	3-19
1057564	2-33
1057578	2-33
1057581	2-33
1057585	3-11
10576	2-11, 2-13
1057602	1-1, 2-5
1057643	2-45
1057684	2-5
1057710	1-1
1057734	2-51
1057735	2-51
1057959	2-71
1057977	2-98
1058032	2-73
1058233	4-15
1058333	2-98
1058574	2-31
1058717	2-11, 2-13
1058722	2-11, 2-13
1058784	2-21
1058996	2-21
1059119	2-65
1059158	2-65
1060278	2-65
1060331	2-51
1060334	2-51
1060413	2-59, 2-61
1060541	2-11
1060690	2-51
1061216	2-5
1061277	3-3, 3-5, 3-7, 3-9
1061575	2-71
1061582	2-97
10632	3-67
10632-1	2-73, 3-7, 3-9, 3-67
10632-13	3-55, 3-57
10632-14	2-53
10632-18	2-59, 2-61
1064550	3-15
1064551	3-15
1064956	2-11, 2-13
1065829	2-17
1066063	2-59, 2-61
1066138	2-17
1066146	2-17
10664	2-83
1067558	2-31
1067978	3-3, 3-5, 3-7, 3-9
1068098	2-17
1068101	2-11, 2-13
1068102	2-11, 2-13
1068103	2-11, 2-13
1068104	2-11, 2-13
1068105	2-11, 2-13
1068802	2-49, 3-25
1068806	2-45
1068904	2-19
1069315	3-59
1070324	3-49
1070338	2-61
1071132	3-49
1071256	2-81
1071358	2-97
1071702	2-57
1071703	2-85
1071718	2-79
1071719	2-79
1071720	2-79, 3-29
1071728	2-79
1071729	2-79
1071730	2-79
1071731	2-79
1071732	2-79

Part Number	Page Number
1071733	2-79
1071734	2-79
1071735	2-79
1071736	2-79
1071737	2-79
1071738	2-79
1071739	2-79
1071740	2-79
1071741	2-79
1071742	2-79
1071743	2-79
1071744	2-79
1071748	2-79
1071759	3-29
1071764	3-29
1071776	3-29
1071938	3-29
1071939	3-29
1071940	3-29
1071945	2-81
1072081	2-57
1072210	2-13
1073048	2-13
1074066	2-19
1074099	2-19
1074448	2-83
1074674	2-83
1075003	2-19
1075327	2-71
1075431	2-31
1075481	2-21
1075615	2-79
1075616	2-79
1075953	3-59
1076004	3-65
1076207	3-33, 3-37
1076210	3-33, 3-37
1076211	3-33, 3-37
1076213	3-33, 3-37
1076215	3-33
1076216	3-33, 3-37
1076218	3-33, 3-37
1076240	2-39
1076249	3-65
1076253	3-65
1076258	3-37
1076264	3-37
1076292	3-33, 3-37
1076300	2-43
1076304	2-59
1076311	2-71
1076354	3-63
1076355	3-63
1076356	3-63
1076382	3-63
1076384	3-63
1076437	3-51
1076438	3-51
1076741	3-70
1076772	3-67, 3-68
1076774	2-31
1076786	3-67
1076795	3-70
1077067	2-13
1077071	2-13
1077073	2-13
10851	5-32
11211	2-67
11329	2-11, 2-13
11399	2-29
11531	2-33
11631	2-45
1201894	2-13
1203454	3-51
1203814	3-51
1204338	3-51
1208977	2-21
12138	2-55
12312	3-59
12317	2-59, 2-61
1232030	3-51
1232065	3-55, 3-57
1232066	3-55, 3-57
1232342	3-59
1232379	3-51
1232471	3-51
1232473	3-55, 3-57
1232484	3-59
1232737	3-59
1233457	3-53
1233799	3-59
1233938	3-59
1234106	3-61
1234489	2-53
1236153	2-71
12364	2-47
1237085	3-27, 4-17
1237087	2-87, 4-16
1240687	3-67
1241776	3-51
1242544	2-59, 2-61
1242833	2-59, 2-61
1243552	2-59, 2-61
12459	2-55, 2-67, 2-83, 3-31, 3-35
1246200	2-57
1246255	2-57
1246677	3-65
1246678	3-65
1247287	2-39
1247568	3-49
1251735	3-70
1251982	2-31
1252042	2-31
1252057	3-67
1254294	3-3, 3-5, 3-7, 3-9
1254686	2-3
1256657	3-67, 3-68
12916	5-7
130096	3-67
13513	2-73
13904	4-11
13907	4-3
140147	2-51
140916	3-49
14131	2-31
14242	2-41
14296	2-25
14595-1	2-39
14601	2-73
14605	2-39, 2-49, 3-23, 3-25
150538	3-51
15331	2-49, 3-25
15555-2	2-31
15675	2-15, 2-17, 2-67, 2-71
15803	3-29
16082	2-49, 3-25
16213	2-73
16376	2-23
16411	1-1
16412	1-1
16695	4-5, 4-7
16735	2-11, 2-61, 2-63, 2-69, 2-71
16931	2-73
16949	2-15
17284	2-11, 2-13, 2-55
17404	2-55
17414	2-31
19065	2-51
19066	2-31, 2-39, 2-59, 2-61, 2-69, 3-3, 3-5, 3-7, 3-9, 3-11, 3-13, 3-15, 3-51, 3-59
19252	2-25
20432	5-31
20433	5-31
20719	5-26
20944	3-51
20950	3-51
20951	3-51
20952	3-51
21168	2-5, 2-55, 2-59, 2-61
21195	2-83
21925	4-3
21933	4-13
21935	4-13
21951	4-8
21952	4-8
21959	4-5
21960	4-5
21961	4-11
21978	4-9
21980	4-9
21981	4-9
21982	4-9
21983	4-9
21984	4-9

Part Number	Page Number
21985	4-9
21993	4-9
222196	2-37
222290	2-19, 3-23, 3-59
222460	2-47, 3-23
222516	2-11, 2-13, 3-49
22290	2-21
22297	2-27
223198	2-11, 2-13
22615	2-45, 2-49, 3-25
23498	2-53
23694	2-33
23788	2-57
24012-1	2-33
24265	2-71
24339	2-41, 3-44, 3-45, 3-46, 3-47
24358	3-51
24576	3-3, 3-5, 3-7, 3-9
24576-1	3-3, 3-5, 3-7, 3-9
24698	2-31
24899	2-45
25005	2-51
25046	3-17
25049	2-73
25312	3-40
25887	2-45
27108	2-49, 3-25
27985	2-15
27988	2-73
28499-1	3-3, 3-5, 3-7, 3-9
28835	4-5, 4-7
29499	2-49, 3-25
29558	3-23
29584	2-47
29832-5	2-35
30013	2-5, 2-55, 2-59, 2-69, 3-17, 3-31, 3-33, 3-35, 3-37
30121	5-11
30122	5-11
30125	5-12
30251	2-45
30252	2-45
30253	2-45
30255	2-45
30406	2-69, 2-71
30533	3-19, 3-20
31258	2-35
312584	3-15
31354	4-5, 4-7
31373	4-5
31375	4-7
314012	3-15, 3-17
31597	3-29
31646	2-49, 2-83, 3-25
317232	3-53
317260	3-51
32126	2-41, 3-44, 3-45, 3-46, 3-47
32483	2-51, 3-3, 3-5, 3-7, 3-9, 3-49, 3-53, 3-63
32485	2-23, 2-25, 2-33, 2-35, 2-41, 2-73, 2-81, 2-83, 3-17
32486	2-15, 2-21, 2-23, 2-39, 2-49, 2-67, 3-11, 3-13, 3-25, 3-70
32490	2-11, 2-13, 2-29, 2-33, 2-57, 2-59, 2-61, 2-67, 2-73, 2-83, 3-19, 3-23, 3-31, 3-35, 3-39
32491	2-5, 2-11, 2-13, 2-15, 2-17, 2-37, 2-39, 2-43, 2-45, 2-47, 2-59, 2-63, 2-65, 2-67, 2-69, 2-71, 2-85, 3-3, 3-5, 3-7, 3-9, 3-11, 3-13, 3-23, 3-51, 3-67
32492	2-23, 2-47, 2-49, 2-55, 2-59, 2-61, 2-67, 2-69, 2-87, 3-25, 3-27
32515	2-51
32523	2-15
32525	2-53
32598	2-57
32747	2-19
32899	2-39
32960	2-7, 2-9
32981	2-73
32983	2-15
32984	3-11, 3-13
32987	2-41, 2-45
33342	2-49, 3-25
33612	2-23, 2-25
33671	2-35, 3-53
33932	3-51, 3-65
34176	4-7
34329	2-41
34877	2-55
35529	2-57
35586	2-85
35886	2-41
35973	2-45
360023	2-39
360062	2-85
360063	2-85
360064	2-55
360074	2-39, 3-44, 3-45, 3-46, 3-47
360077	2-55, 3-23
360081	2-49, 3-25
360109	2-45
360110	2-45
360134	1-1, 2-5
360136	1-1, 2-5
360137	2-5
360138	2-5
360152	2-41
360162	3-42, 3-45
360163	3-41, 3-44
360181	2-53
360270	2-39
360271	2-39
360272	2-39
360273	2-39
360274	2-39
360275	2-39
360276	2-39
360283	2-7, 2-9
360295	3-41, 3-44
360296	3-42, 3-45
360300	3-43, 3-47
360319	2-7
360327	1-1, 2-59
360336	1-1, 2-67
360349	2-45
360357	2-49, 3-25
360362	2-29
360363	2-29
360364	2-27
360367	2-33
360372	2-33
360386	2-55
360388	2-7, 2-9
360410	2-47
360411	2-47
360414	2-47, 3-23
360417	2-47
360424	2-67
360442	2-73
360449	2-47
360451	2-47
360455	2-55
360460	2-13, 2-37, 2-43
360465	2-19
360467	2-85
360492	2-45
360602	2-59, 2-61
360603	1-1, 2-67
360606	2-67
360630	3-20
360704	2-11, 2-13
360711	2-21
360721	2-23
360732	2-25
360761	1-1, 2-9
360763	2-9
360768	2-55
360769	2-41
360774	2-43
360781	2-5, 2-9
360784	1-1, 2-7
360801	2-47, 2-49, 3-23, 3-25
360802	2-39

Part Number	Page Number
360819	2-35
360821	2-37
360824	2-63
360836	2-31
360837	2-31
360840	2-37
360844	1-1
360848	2-67
360867	2-21
360872	2-31
360893	2-59, 2-61
360894	2-59, 2-61
360906	2-37
360932	3-20
360943	2-69
360961	2-47
360972	2-33
360973	2-11, 2-13, 2-71, 3-39, 3-40
360981	2-51
360991	2-83
361009	2-77
361012	2-85, 4-11
361014	2-49, 3-25, 4-5
361018	2-81, 4-9
361021	2-45, 4-7
361023	1-1, 2-83
361028	2-85, 4-11
361040	2-77
361041	2-77, 3-29
361042	2-77
361044	2-77
361050	2-77
361052	2-77
361069	3-43
361075	2-19
361077	2-41, 3-43, 3-46, 3-47
361081	2-41, 3-46
361086	2-77
361153	1-1, 2-53
361160	2-5
361165	2-15
361295	2-57
361299	2-85
361306	2-7
361327	2-53
361339	2-29, 2-33, 2-59, 3-11, 3-13, 3-15
361342	2-11
361343	2-11
361344	2-11, 2-13
361345	2-11, 2-13
361346	3-15
361349	5-29, 5-31
361352	5-31
361360	5-34
361364	5-34
361366	5-17
361371	5-3
361372	5-5
361373	5-26
361374	5-12
361375	5-22
361377	5-21
361378	5-13, 5-15
361386	5-34
361387	5-34
361388	5-11
361389	5-7
361390	5-20
361392	5-9
361399	5-34
361401	5-7
361406	5-37
361407	5-36
361411	5-12
361415	5-26
361416	5-3
361417	5-24
361418	5-26
361420	5-36
361421	5-21
361427	5-36
361428	5-17
361430	5-24
361431	5-4
361435	5-20
361436	5-3
361438	5-13
361440	5-33
361554	2-11, 2-13
361555	2-45
361589	5-9
361626	5-35
361654	5-32
361927	2-53
361951	2-11
36328	2-55
363502	2-7
36438	3-3, 3-5, 3-7, 3-9
364779	2-31
364826	2-41
364827	2-41
364861	2-41
364863	2-41
364864	2-39
364948	2-39
365110	5-32
366025	3-3, 3-5, 3-7, 3-9
366026	2-23, 5-28
366054	2-23
366055	2-23
366092	2-41, 3-43, 3-46, 3-47
366093	3-43, 3-47
366094	2-41, 3-46
366104	2-41, 3-43, 3-46, 3-47
366107	3-44, 3-45, 3-46, 3-47
366111	3-46
366112	3-47
366113	3-46
366114	3-47
366116	3-45
366119	3-44
367771	2-61
368063	5-13
368064	5-13
368065	5-13, 5-15
368066	5-15
368067	5-15
368068	5-13, 5-15
368069	5-15
368075	5-34
368078	5-34
368082	1-1, 5-34
368084	5-31
368086	5-31
368090	5-32
368091	5-32
368099	5-36
369704	2-5
369781	2-47, 3-23
370010	2-3
370025	2-3
371017	5-18
372900	5-12
372901	5-12
372904	5-12
372906	5-5
372907	5-5
372910	5-37
372912	5-12
372913	5-12
372914	5-12
372917	5-26, 5-27
372928	5-12
373217	4-8
373226	4-8
373236	4-8
373260	4-8
373291	4-8
373292	4-8
373317	4-3
373327	4-3
373346	4-3
373347	4-3
373348	4-3
373389	4-3
373391	4-3
373393	4-3
373394	4-3
373395	4-3
373398	4-3
373402	4-3
373413	4-3
373427	4-3

Part Number	Page Number
373428	4-3
373429	4-3
373434	4-3
373493	4-3
373584	4-14, 4-15
373586	4-14
373642	4-16, 4-17
373646	4-16, 4-17
373657	4-17
373663	4-16, 4-17
373684	4-17
373685	4-16, 4-17
373721	4-3
373722	4-13
373723	4-13
373726	4-13
373727	4-13
373728	4-13
373732	4-14, 4-15
373733	4-14, 4-15
373734	4-15
373735	4-15
373736	4-14, 4-15, 4-17
373737	4-15
373745	4-14, 4-15
374269	5-23
374559	2-41, 4-8
375001	3-44, 3-45, 3-46, 3-47
375019	2-51
375020	2-43
375059	5-16
37555	4-5, 4-7
377537	1-1
377538	1-1
377540	1-1
379000	3-11, 3-13
379719	2-67
379791	2-61
382101	2-27
382320	3-49
382493	1-1, 2-27
382516	2-19
38263	4-5
38315	4-8
383165	2-19
384418	2-71, 3-65
384419	2-71
384859	5-32
384874	5-12
38490	4-8
385685	3-51
385947	2-3
386063	3-53
386346	2-19
387376	2-53
387387	2-53
388500	5-27
39051	5-3, 5-7
39062	5-3
39063	5-3
39065	5-13
39073	5-5
39087	5-3
39088	5-3, 5-5
39094	5-4
39114	5-7
39197	5-19
39239	2-19
39277	2-5, 2-33, 3-33, 3-37
39283	2-41, 3-19, 3-46, 3-47
39322	2-71
39332	2-53
39338	2-53
39346	2-47
39349	2-7, 2-9, 2-25, 2-73
39350	2-41
393570	5-3
393588	5-35
393614	5-17
39395	2-45
39396	2-49, 3-25
39508	5-26
39527	4-7
395973	2-87
39658	2-57, 3-7, 3-9
397249	3-23
39987	2-73
40166	5-22, 5-25, 5-26
40585	2-31
40607	2-71
40678	2-31
40678-1	2-23, 2-35
40870-8	1-1
41140	2-69
41141	2-5
41142	2-35
41143	3-67
41178	2-67, 3-17
41186	3-17
41305	2-49, 3-25
41342	2-31, 3-19
41346	3-11, 3-13
41359	2-19, 2-47, 3-23
41430	2-41, 2-47, 2-55, 2-59, 2-61, 3-19, 3-20
41561	2-53
41973	5-19, 5-21
42120-1	2-55
42215	2-21
42223	2-81
42227	2-83
43242	2-23
43454	2-15
43672	3-3, 3-5, 3-7, 3-9
43673	3-3, 3-5, 3-7, 3-9
43844	2-31, 3-51, 3-55, 3-57
44078	2-51
44868	2-81
44869	2-81, 2-87
44906	2-43, 2-47
44936	2-41
44961	2-5
45628	4-5, 4-7
45786	2-41, 3-43, 3-46, 3-47
46236	2-31
46480	2-41
46481	2-83
46559	2-49, 3-25
46800	2-23
47501	2-49, 3-25
47513	2-83
47566	2-27, 2-31
47585	2-21
47638	2-85
47655	2-83
47719	2-41
47752	2-21
47753	2-49, 3-25
47801	2-41
48732	2-55
49034	3-11, 3-13
49145	2-39
49225	2-41
49263	2-19
49266	2-29, 2-31, 2-41, 2-49, 2-59, 2-61, 2-73, 3-25, 3-49
49697	2-71, 3-65
49766	2-23
49826	2-59
50388	2-25
51109	2-39
51176	2-25
51225-1	2-67
51305	3-51
51331	5-5
51417	4-8
51529	2-43
51562	3-23
51564	2-23, 2-25, 2-45
51813	2-47
52402	2-45, 2-81, 2-85
52508	2-45
53078	2-31
54009	3-39
54345	2-31
54390	2-39
54395	2-11
54396	3-11, 3-13
54400	2-47, 3-23
54911-32	2-29
54995	2-43, 2-47
55034	3-7, 3-9, 3-15
55041	3-15
55586	2-45, 3-27

Part Number	Page Number
55685	2-57, 2-85
55779	2-45
55847	5-34
55926	4-3
55965	3-39
56185	2-21
56186	2-19, 3-59
56690	2-21, 2-87
56820	2-41, 2-57, 2-85, 2-87
56821	2-49, 3-25
57248	3-55, 3-57
57370	4-8
57373	4-8
57374	4-8
57375	4-8
57564	2-5, 2-9
57962	2-77
57988	3-27
58056	2-41
58286	2-23, 2-33, 2-35
58346	2-27
58366	2-19, 3-7, 3-9
59118-6	2-53
59431	2-3
59432	2-3
59542	2-55
59633	2-49, 3-25
59661	3-17
59672	2-37
59870	2-85
59965	2-67
61456	3-51
63416	2-85
64173	2-47
64379	2-67
64425	2-49, 3-25
64757	3-65
64886	2-41
64887	2-41
65145-1	2-81
65215	2-83
65221	1-1, 2-83
65222	2-83
65229	4-7
65230	4-5
65441	2-73
66204	5-11
66207	5-11
67004	3-39
67366	2-55, 2-83
67767	2-5, 2-29, 2-45, 2-67, 2-69
68275	3-69
68567	3-63
68866	2-73
68872	2-35
68873	2-35
69234	2-21, 2-23, 2-25
69899	2-31
69971	3-19
70006	2-83
70096	4-3
70100	4-3
70165	5-23
70173	2-31
70188	5-22
70197	5-31
70198	5-31
70199	5-31
70201	5-31
70205	5-31
70207	5-31
70208	5-31
70209	5-31
70210	5-31
70212	5-31
70213	5-31
70622	2-21
70709	2-21
70717	2-21
70887	5-3
70888	5-3
70893	5-17
70897	5-5
70900	5-7
70901	5-7
70902	5-7
70903	5-7
70912	5-7
70913	5-12
70919	5-33
70920	5-33
70923	5-18
70925	5-18
70936	5-9
70937	5-9
70941	5-11
70942	5-11
70943	5-11
70945	5-11, 5-19
70946	5-11
70947	5-11
70948	5-18
70949	5-18
70950	5-18
70954	5-11
70955	5-11
70962	5-31
70964	5-26
70965	5-26
70966	5-26
70967	5-26
70970	5-13
70977	5-21
70978	5-21
70979	5-21
70980	5-22
70982	5-25
70983	5-25
70984	5-25
70986	5-24
70989	5-24
70991	5-24
70992	5-24
70994	5-32
70998	5-3
70999	5-3
71026	2-17
71126	2-47, 3-23
71244	2-53
71367	2-39
71477	3-19
71579	2-5
71721	2-81
71985	5-3
71986	5-3
71987	5-3
71988	5-3
71989	5-3
71991	5-3
71992	5-3
71993	5-3
71995	5-9, 5-24, 5-25, 5-32, 5-34, 5-37
71996	5-5
71997	5-5
72010	5-5
72014	5-7
72015	5-7
72019	5-7
72171	3-3, 3-5, 3-7, 3-9
72439	2-15
72728	2-73
72968	2-5, 2-61, 3-69
72994	5-7, 5-37
72995	5-7, 5-32
72998	5-18
72999	5-18
73411	2-73
73479	5-18
73481	5-37
73483	5-12
73484	5-12
73488	5-36
73491	5-9
73493	5-9
73497	5-9
73498	5-9
73499	5-9
73500	5-9
73502	5-9
73504	5-9
73506	5-9
73507	5-9
73508	5-9
73509	5-19
73511	5-19
73512	5-19
73513	5-19

Part Number	Page Number
73514	5-19
73515	5-19
73516	5-19
73518	5-19
73519	5-19
73522	5-11
73523	5-11
73525	5-11
73527	5-11
73528	5-11
73529	5-11
73530	5-11
73532	5-34
73533	5-20
73534	5-20
73535	5-29, 5-32
73544	5-31
73546	5-31
73555	5-26
73562	5-13
73563	5-13
73565	5-16
73567	5-15
73568	5-15
73569	5-15
73570	5-15
73571	5-15
73572	5-15
73573	5-15
73574	5-15
73575	5-15
73576	5-15
73577	5-15
73579	5-15
73580	5-15
73581	5-15
73582	5-15
73585	5-15
73586	5-15
73588	5-13, 5-15
73589	5-13, 5-15
73590	5-13, 5-15
73593	5-21
73594	5-21
73596	5-21
73598	5-21
73599	5-21
73600	5-21
73601	5-21
73602	5-21
73603	5-21
73604	5-21
73605	5-22
73606	5-22
73610	5-22
73618	5-25
73619	5-25
73621	5-25
73622	5-25
73623	5-25
73624	5-25
73625	5-25
73626	5-25
73629	5-24
73631	5-24
73633	5-32
73634	5-32
74094	4-5, 4-7
74095	4-7
74098	4-7, 4-8
74099	4-7
74100	4-5, 4-7
74120	4-8
74174	4-7
74180	4-3
74183	4-13
74185	4-13
74196	4-13
74222	4-13
74225	4-3
74226	4-3
74232	4-13
74237	4-3
74243	4-13
74250	4-5, 4-7
74454	2-53
74455	2-5, 2-23, 2-25, 2-31, 2-55, 2-67, 2-69, 3-17
75128	2-11, 2-13
75430	2-37
75934	2-73
75939	2-51
75968	2-21
762425	2-85
762426	2-57, 2-85
762427	2-41, 2-67, 2-83, 2-87, 3-23
762428	2-45, 3-27
762432	2-41, 2-57, 2-85, 2-87
762433	2-21, 2-87
762434	2-83
762435	2-21
762437	2-81
762438	2-45, 2-81, 2-85
762443	3-29
762445	2-81, 2-87
762446	2-81
762457	2-83
762458	2-49, 3-25
762461	2-83
762462	2-83
762463	2-41
762465	2-41
762468	2-81
762492	2-83
762516	2-97
763045	2-29, 3-11, 3-13, 3-15, 3-17, 3-55, 3-57
763114	3-67
763149	2-71
76316	2-83
764139	3-65
76570	2-37, 2-47, 3-23
767411	2-49, 3-25
767422	3-27
767428	2-21
76960	2-15
769778	3-55, 3-57
770176	3-59
77097	2-41, 2-67, 2-83, 2-87, 3-23
78143	2-23
78785	2-73
79246	2-67
79729	4-8
79785	4-11
79786	4-11
79787	4-11
79788	4-11
79789	4-11
79792	4-11
79794	4-11
79795	4-11
79796	4-11
79800	4-11
79801	4-11
79802	4-11
79804	4-11
79805	4-11
79806	4-11
79807	4-11
79808	4-11
79812	4-11
79814	4-11
79820	4-11
81584	2-31
83887	2-73
84170	2-73
84581	2-49, 3-25
84648	5-15
84651	5-13, 5-15
86029	2-49, 3-25
86328	2-25
86618	2-71
86636	3-51
86659	2-39
86798	2-19
86866	2-5, 2-23
87099	2-3
87104	2-67
87172	3-21
87180	2-5
87181	1-1, 2-5
87216	2-55
87244	2-55

Part Number	Page Number
87299	2-53
87308	2-15, 2-39
87333	2-3
87334	2-3
87536	2-19
87546	2-71
87581	2-15
87631	2-45
87689	1-1, 2-67
87707	2-51
87738	2-31
87838	2-53
87866	2-19
87940	5-5
87983	2-51
9000351	2-77
9003869	5-32
9003870	5-32
9004339	5-4
9004343	5-7
9004344	5-7
9004345	5-7
9004346	5-7
9004347	5-7, 5-25
9004348	5-17
9004349	5-18
9004350	5-18
9004351	5-18
9004358	5-19
9004363	5-11
9004367	5-20
9004368	5-21
9004369	5-21
9004372	5-21
9004375	5-22
9004381	5-24
9004382	5-24
9004385	5-25
9004389	5-26
9004390	5-26
9004393	5-26
9004395	5-27
9004396	5-27
9004397	5-27
9004398	5-27
9004399	5-27
9004400	5-27
9004401	5-27
9004402	5-33
9004403	5-33
9004404	5-33
9004405	5-33
9004406	5-33, 5-37
9004407	5-33
9004410	5-9, 5-25
9004436	5-18
9004437	5-18
9004438	5-18
9004445	5-21
9004449	5-25
9004993	5-3
9004994	5-5
9004995	5-5
9004996	5-4
9004997	5-4
9004999	5-4
9005000	5-4
9005001	5-4
9005002	5-4
9005003	5-7
9005004	5-7
9005006	5-7
9005007	1-1, 5-7
9005008	5-18
9005009	5-18
9005010	5-19
9005011	5-11
9005012	5-11
9005013	5-11
9005014	5-11
9005015	5-11
9005016	5-11
9005017	5-11
9005018	5-11
9005019	5-22
9005020	5-23
9005021	5-13
9005022	5-13
9005023	5-13
9005024	5-24
9005025	5-25
9005026	5-26
9005027	5-26
9005028	5-26
9005029	5-16
9005030	5-34
9005031	5-34
9005032	5-34
9005033	5-31
9005034	5-31
9005035	5-31
9005037	5-31
9005038	5-31
9005039	5-31
9005040	5-31
9005041	5-31
9005042	5-31
9005043	5-32
9005044	5-9
9005045	5-9
9005046	5-9
9006013	3-31
9006014	3-35
9006015	3-11
9006021	3-21
9006023	3-39
9006025	3-40
9006029	3-19
9006387	1-1
9006391	1-1
9006534	1-1
9006700	2-97
9006712	3-71
9006713	3-71
9006714	3-71
9006715	3-71
9006716	3-71
9006717	3-71
9006718	3-71
9006724	3-71
9006727	3-71
9006897	2-29
9006899	2-29
9006900	2-55
9006902	2-55
9006903	2-19
9006905	2-19
9006906	2-29
9006908	2-29
9006909	3-39
9006911	3-39
9007131	3-3, 3-5, 3-7, 3-9
9007372	2-55
9007374	2-55
9007390	2-51
9007868	3-7
9007869	3-5
9007870	3-9
9007871	3-3
9009383	3-71
9010085	3-49
9010086	3-49
9010740	2-11
9011421	2-57
9017556	3-37
9017557	3-33
9017983	4-17
9017984	4-16
9018444	2-59, 2-61
9019140	2-39
9019144	2-57
9020593	3-69
9020918	3-67
9020940	2-31
9021038	3-70
97163	2-37

PART DESCRIPTION TO PAGE NUMBER CROSS REFERENCE LIST

A

Ace, Thrust, Motor, Hyd [En], 4-5, 4-7
Actuator, Valve, By-Pass [En], 4-3
Adapter Wldt, Wand, Vacuum, 3-39
Adapter, Detent, Valve, Hyd, 4-11
Alarm Assy, Backup, 12-48vdc 82-102dba, 3-3, 3-5, 3-7, 3-9
Alarm Assy, Backup, 12/48vdc, 3-3, 3-5, 3-7, 3-9
Alarm Kit, Backup, Flsh, Ohg, Ic, Ci, 3-7
Alarm Kit, Backup, Flsh, Rear, Ic, Ci, 3-3
Alarm Kit, Backup, Strb, Ohg, Ic, Ci, 3-9
Alarm Kit, Backup, Strb, Rear, Ic, Ci, 3-5
Alarm, Audio, 10-48vdc [Mallory], 2-19
Alternator, 5-34
Anchor [Shackle], .625 Thick, 3-70
Angle Wldt, Bmpr, Tower, Lh, 3-21
Angle Wldt, Bmpr, Tower, Rh, 3-21
Angle Wldt, Mtg, Door, 3-17
Angle Wldt, Mtg, Eng, Front [D1005], 2-25
Angle, Baffle, 2-53
Angle, Bottom, 3-23
Angle, Brace, 2-29
Angle, Cab, Rear [Drip Ledge, S20], 3-15
Angle, Cab, Side [Drip Ledge, S20], 3-15
Angle, Mtg, Alarm, 3-3, 3-5, 3-67
Angle, Mtg, Latch, 3-17
Angle, Mtg, Muffler, 2-33
Angle, Mtg, Radiator, 2-29
Angle, Mtg, Wndw, Lh, 3-15
Angle, Mtg, Wndw, Rh, 3-15
Antenna, Telem [4g, 108"], 3-49
Antenna, Telem, 110 In [Gprs], 3-49
Arm Wldt, Brush, Main, Drive, 2-45
Arm Wldt, Brush, Main, Idler, 2-45
Arm Wldt, Lift, Brush, 2-47
Arm Wldt, Lift, Lh, 3-25
Arm Wldt, Lift, Rh, 2-49
Arm, Cntrl, Govnr, Dsl, 2-23
Arm, Lever, Brake, 4.1 [Knott], 2-39
Arm, Lift, Hppr, W/ Label [S20] Jp, 2-55
Arm, Lift, Hppr, W/ Label [S20] Na, 2-55
Arm, Safety, Hppr, W/ Label, [S20], 2-55
Arm, Safety, Hppr, W/ Label, Tj [S20], 2-55
Arm, Wiper, Windshield 16.0l, 3-15
Armature, Motor [Ku], 5-31
Armrest Assy, Rh, F/53845 [Grammer], 3-19
Assy pump, injection, 5-15
Assy tappet, 5-15
Assy, Starter, 5-31

B

Ball, 5-7, 5-11
Ball [Ku], 5-31
Ball Bearing, 5-24
Ball, Valve, Hyd, 4-11
Balljoint, .25-28 Fem, .25-28 Mal, 2-73
Band, Cover [Ku], 5-31
Bar, Cover, 2-71
Bar, Flat, Stl 0.19, 01.50 X 04.1l, 2-41
Bar, Flat, Stl 0.25, 01.00 X 03.3l, 2-31
Bar, Flat, Stl 0.38, 01.00 X 03.3l, 2-31
Bar, Hex, Stl 0.75, 01.6l .50h Thru, 2-45
Bar, Sppt, Hppr Cover [S20], 3-63
Battery, Wet, 12vdc 0600cca, 2-35
Bearing, 5-31
Bearing [Ku], 5-33
Bearing Assy, 2.33d 1.25b Cup / Cone Kit, 2-41
Bearing Kit [Cl], 4-13
Bearing Kit, Motor, Hyd, Repair [Cl], 4-8
Bearing, Ball, 5-21
Bearing, Ball [Ku], 5-21
Bearing, Ball, 0.67b 1.57d 0.47w, 2-53
Bearing, Ball, 1.18B 2.44D 0.6, 3-44, 3-45, 3-46, 3-47
Bearing, Ball, 1.18b 2.44d 0.63w, 2-39
Bearing, Ball, 1.38b 2.83d 0.67w, 2-45
Bearing, Case [Ku], 5-18
Bearing, Cone, Pump, Hyd, 4-3
Bearing, Cshft [Ku], 5-18
Bearing, Cshft, -.2mm [Ku], 5-18
Bearing, Cshft, -.4mm [Ku], 5-18
Bearing, Cshft, Std [Ku], 5-18, 5-19
Bearing, Cup, 4-3
Bearing, Flng, 2hole, 0.50b, 2-21
Bearing, Flng, 2hole, 0.50b [Nyl], 2-21
Bearing, Flng, 2hole, 1.00b, 2-55
Bearing, Needle Bn, 4-9
Bearing, Self Align, 1.25b 2.00d, 2-55
Bearing, Thrust, 4-5, 4-7
Bearing, Thrust, Pump, Hyd, 4-3
Bearing, Thrust, Std [Ku], 5-11
Bearing, W/ Collar, 0.75b 1.85d 1.06w, 2-45
Bellcrank, Lift, Brush, Side, Lh, 2-47
Bellcrank, Lift, Brush, Side, Rh, 2-47
Bellows, Solenoid, .75-16, 1.5l, 2-51
Belt, V, 37.5l [3v, 3vx], 1-1, 2-53
Belt, V, 9.5mm 37.4l [Ku], 1-1, 5-34
Blade, Wiper, Windshield, 22.0l, 3-15
Block, Adj, 2-43
Block, Adj, Pivot, 2-47, 3-23
Block, Guide, Hppr, 2-61
Bolt, 5-4, 5-5, 5-7, 5-17, 5-18, 5-20, 5-29, 5-31, 5-34
Bolt [Ku], 5-25, 5-33, 5-37
Bolt, Adj, 5-22
Bolt, Assy, Adj, 5-22
Bolt, Carriage, M06 X 1.00 X 30, 2-61
Bolt, Connecting Rod, 5-11
Bolt, Flng, 5-35
Bolt, Flywheel, 5-20
Bolt, Hex [Ku], 5-19, 5-21, 5-23
Bolt, Hex, Soc [Ku], 5-13
Bolt, joint, 5-15
Bolt, Motor, Hyd, 4-8
Bolt, Shld 1.25d X 4.45l,1.0-20 Drilled, 2-41
Bolt, Shld, .31d X 1.00, .25-20, 2-73
Boot, .63id .29l .90w, 2-19
Boot, Bellows, 3.1l 4.4w 2.8h 1hole, Neo, 2-21
Boot, Switch, Ignition, 2-19
Boot, Terminal, Battery, 02-01ga, Blk, 2-35
Boot, Terminal, Battery, 02-01ga, Red, 2-35
Boot, Wire, Starter [Ku], 5-31
Box Wldt, Muffler, Vacfan, 2-53
Bracket Wldt, Fltr, 2-71
Bracket Wldt, Latch, 2-15
Bracket Wldt, Mtg, Bmpr, 3-21
Bracket Wldt, Mtg, Door, 3-17
Bracket Wldt, Mtg, Eng, Rear, 2-25, 3-3, 3-5, 3-7, 3-9
Bracket Wldt, Steering, Tilt, 2-21
Bracket Wldt, Switch, Fwd / Rev [S20], 3-59
Bracket Wldt, Switch, Shakr, 2-51
Bracket Wldt, Tank/Pump Sppt [S20], 3-51
Bracket, Adj, Seat, 2-11
Bracket, Adj, Strike, 2-17
Bracket, Angle, Hppr Bottom Stiffener, 2-59
Bracket, Angle, Keeper, Cable, 2-47, 3-23
Bracket, Angle, Mtg, Brg, 2-45
Bracket, Angle, Mtg, Pin, Latch, 2-15
Bracket, Angle, Pivot, Door, Dump, Lh, 2-67
Bracket, Angle, Pivot, Door, Dump, Rh, 2-67
Bracket, Arm, 5-9
Bracket, Arm, Side Brush, 2-49
Bracket, Clip, Safety, 2-73
Bracket, Door, Indicator, 2-67
Bracket, Hinge, Door, 2-7, 2-9
Bracket, Inlet, Vacfan, 2-51
Bracket, Latch, Door, 3-17
Bracket, Latch, Keeper [Southco], 2-71
Bracket, Latch, Mtg, Strike, 2-17
Bracket, Motor, Drive, 2-41
Bracket, Mtg, Bmpr, Front, Lh, 2-59, 2-61
Bracket, Mtg, Bmpr, Front, Rh, 2-59, 2-61
Bracket, Mtg, Cable, Propel, 2-73, 3-3, 3-5, 3-7, 3-9
Bracket, Mtg, Cyl, 2-67
Bracket, Mtg, Fan, 3-15
Bracket, Mtg, Fltr, Air, 2-27
Bracket, Mtg, Hinge, 2-59
Bracket, Mtg, Horn, 3-7, 3-9
Bracket, Mtg, Mirror, 3-11, 3-13
Bracket, Mtg, Mirror, Brush, 3-11, 3-13
Bracket, Mtg, Mirror, Top, 3-11, 3-13
Bracket, Mtg, Motor, Lh, 3-25
Bracket, Mtg, Motor, Rh, 2-49
Bracket, Mtg, Panel, Cab, 3-15

Bracket, Mtg, Sgl Spray Nozzle [S20], 3-55, 3-57
Bracket, Mtg, Switch, 2-57
Bracket, Mtg, Tank, Fuel, 2-31
Bracket, Mtg, Wire, 2-31
Bracket, Protector, Float Switch, 3-51
Bracket, Retainer, Hppr, Lip, 2-61
Bracket, Retainer, Safety, 2-73
Bracket, Retainer, Skirt, Rh, Sbdc, 3-33, 3-37
Bracket, Rod, Safety, 2-63
Bracket, Sbdc, Lh, 3-35
Bracket, Sbdc, Rh, 3-31, 3-35
Bracket, Sidebrush, Lh, 3-25
Bracket, Sppt, Fuelline, 2-31
Bracket, Stiffener [S20], 3-63
Bracket, Stop, Brush Door, 2-7, 2-9
Bracket, Switch, Brake, 2-39
Bracket, Switch, Reverse, 3-3, 3-5, 3-7, 3-9
Bracket, Switch, Shaker, 2-51
Bracket, Tank Retainer, 3-53
Bracket, Tray, 2-69
Brake Assy, 2-39
Brake Kit, Linkage Ci [S20], 2-39
Brkt, Blu Spotlight, Fr, Frame Mtg, 3-67
Brkt, Blu Spotlight, Rr, Frame Mtg, 3-67
Brush-Side Swp, Flatwire, 2-3
Brush-Side Swp, Polypropylene, 2-3
Brush-Side Swp, Soft Nylon, 2-3
Brush-Sweep, Natural Fiber, Spiral, 2-3
Brush-Sweep, Polyester 24 Dr, Spiral, 2-3
Brush-Sweep, Polyester 8 Dr, Spiral, 2-3
Brush-Sweep, Polypropylene and Wire, Spiral [Bronze], 2-3
Brush-Sweep, Polypropylene, Spiral, 2-3
Brush-Sweep, Wedge, Polypropylene, Spiral, 2-3
Brush-Sweep, Window, Polypropylene, Spiral, 2-3
Bumper Kit, Corner, Rear, Ci [S20], 3-21
Bumper Wldt, Front, 2-59, 2-61
Bumper, Rbr, 0.90d 0.38th 0.18h, 2-11, 2-13
Bumper, Rbr, Adh, 0.50d 0.14th, 3-65
Bushing, Gear, Idler [Ku], 5-19
Bushing, Gov Gear, 5-3
Bushing, Pin, Piston [Ku], 5-11
Bushing, Sleeve, 0.50b 0.59d 0.38l, Stl, 2-47
Bushing, Sleeve, 0.75b 0.88d 0.75l, Tef, 2-67
Bushing, Sleeve, 0.78b 0.86d 0.93l, Bnz, 2-39
Bushing, Sleeve, 1.00b 1.13d 0.99l, Fgl, 2-57
Bushing, Swivel, .247d X .35, .31hex, Pl, 2-23
Bushing, Valve, Hyd En, 4-11
Button, Cntrl, Horn, 2-21

C

Cable, 04ga 11.0l Blk .41ring /.41ring, 2-35
Cable, Battery, 04ga 22.0l Blk .41ring, 2-35
Cable, Battery, 04ga 38.0l Red .41ring, 2-35
Cable, Cntrl, 46.3l, W/ Handle, 2-19
Cable, Glv .13d 010.0l .52eye /.52eye, 3-21
Cable, Glv .13d 024.2l .25eye /.25eye, 2-11, 2-13
Cable, Push / Pull, 092.0l .25-28/.25-28, 2-73
Cable, Ss .12d 60.25l .55eye / M6-1.0, 2-47
Cable, Ss .12d 89.0l .55eye / M6-1.0, 3-23
Cable, Ss .19d 008.5l .55eye / M6-1.0, 2-49, 3-25
Cam Wldt, Limiter, Spd, 2-37
Cam, Plt, Brake [Nickel], 2-39
Camshaft Assy [Ku], 5-19
Camshaft,Fuel, 5-21
Cap, 5-5
Cap Assy, Tank, Drain, 3-51
Cap Assy, Valve, Hyd, 4-11
Cap Assy, Valve, Hyd [En], 4-11
Cap Sealing, 5-3
Cap, Breather, Hyd, 1-1
Cap, Breather, Hyd, 5.2 Ds, 2-83
Cap, End, Valve, Steering, 4-13
Cap, Filler, Oil [Ku], 5-12
Cap, Fuel, Tank, 2-31
Cap, Hub, Dust, 2.57d 0.77l, 2-39
Cap, Radiator, 14psi [Stant], 2-29
Cap, Screw, Idler [Ku], 5-22
Cap, Sealing, 5-3
Cap, Tank, Fuel, 2.3neck 2.6d W/ Chain, 2-31
Cap, Valve Stem, 3-43, 3-46, 3-47
Cap, Valve, Tire, Tubeless [Schrader], 2-41
Cap, Vinyl, 0.23id, 1.50l, 2-45
Cap, Vinyl, 3.28d 0.45l, 2-45
Cap,Sealing, 5-5
Cap,Valve, 5-9
Case, Gear, Complt [Ku], 5-7
Case, Main, Brg Assy, 5-18
Chain, Sash, 35, 02.4l 04 Link, 3-3, 3-5, 3-7, 3-9
Channel Wldt, 2-53
Channel Wldt, Ohg, Lh, 3-11, 3-13
Channel Wldt, Ohg, Rh, 3-11, 3-13
Channel, Latch, 2-15
Channel, Mtg, Lock, 2-55
Channel, Mtg, Steering Latch, 2-21
Channel, Recirculation Flap, 2-5
Channel, Shield, Fuel Drip, 2-31
Cir-Clip, Gear, 5-19
Cir-Clip, Gov, 5-21
Cir-Clip, Pin, 5-11
Clamp [Kubota], 5-32
Clamp, Cable, Nyl, 0.62d, Nat, 3-49
Clamp, Cable, Stl, .562d X 0.75w, 1hole, 2-21
Clamp, Cable, Stl, 0.18d X 0.75w, 1hole, 2-23
Clamp, Cable, Stl, 0.25d X 0.56w, 1hole, 2-31
Clamp, Cable, Stl, 0.44d X 0.62w, 1hole, 2-31
Clamp, Cable, Stl, 0.69d X 0.62w, 1hole, 2-5, 2-29, 2-45, 2-67, 2-69
Clamp, Cable, Stl, 0.75d X 0.75w, 1hole, 3-55, 3-57
Clamp, Cable, Stl, 0.88d X 0.62w, 1hole, 2-23, 2-35
Clamp, Cable, Stl, 1.00d X 0.75w, 1hole, 2-21, 2-23, 2-25
Clamp, Cable, Stl, 1.0x2.0x0.62w, 1hole, 2-55, 2-83
Clamp, Cable, Stl, 1.25d X 1.00w, 1hole, 2-19, 3-7, 3-9
Clamp, Cable, Stl, 1.50d X 0.75w, 1hole, 2-25
Clamp, Hose, 5-12
Clamp, Hose, Heater [Ku], 5-32
Clamp, Hose, Wormdrive, 0.25-0.62d, .31w, 2-31, 3-51, 3-55, 3-57
Clamp, Hose, Wormdrive, 0.81-1.50d, .50w, 2-29
Clamp, Hose, Wormdrive, 1.06-2.00d, .56w, 2-33
Clamp, Hose, Wormdrive, 1.56-2.50d, .50w, 2-27
Clamp, Hose, Wormdrive, 3.56-4.50d, .50w, 2-53
Clamp, Muffler, 1.38d, 2-33
Clamp, Muffler, 1.75d, 2-33
Clamp, Tube, Inj, Pipe [Ku], 5-26
Clamp, Tube, Inj, Pipe [Ku], 5-26
Clevis, Adj, 0.25pin, 0.25-28 Lh, Pl, 2-39
Clevis, Adj, 0.25pin, 0.25-28 Rh, Pl, 2-39
Clevis, Adj, M6 Pin, M6 X 1.0 Rh, Pl, 2-47, 2-49, 3-23, 3-25
Clip, Grip, Finger, 1.00-1.88d,White Vyl, 3-39
Clip, Grip, Finger, 1.19-1.35d, Nk Pl, 3-3, 3-5, 3-7, 3-9
Clip, Grip, Pipe, 0.50, Plstc, 3-15
Clip, Keeper, 2-69, 2-71
Clip, Spring, Prop Arm, 2-55
Clutch, Starter [Ku], 5-31
Collar, 5-24
Collar, Crankshaft, 5-11
Collar, Gear, 5-19
Collet, Spring, 5-9
Column, Steering, 09.9l 0.86d 36tooth, 2-21
Comp.Crankshaft, 5-11
Comp.Weight, 5-21
Cone, Valve, Hyd, 4-11
Connector, Blade, 2 Terminal [Altv], 5-34
Connector, Blade, Mal, 0.25, 1 Terminal, 3-67

Connector, Butt, Sealed[14-16awg], 3-59
Control Box Assy Kit, Replmt, Telem[Intl], 3-49
Control Box Assy Kit, Replmt, Telem[Usa], 3-49
Cord, Sponge, Neo, 1.0d 36.3l, 1-1, 2-67
Cord,Glow Plug, 5-26
Coupling, Drive, 1.2d 1.5l 09tooth, 2-81
Coupling, Drive, Flex, 09.5d /13tooth, 2-25
Cover, 5-7
Cover [Ku], 5-31
Cover Assy, Head, Cyl, 5-12
Cover Wldt, Lh, Sbdc [S20], 3-37
Cover Wldt, Rh, Sbdc [S20], 3-33, 3-37
Cover, Breather, 5-12
Cover, Brg Case, Eng [Ku], 5-18
Cover, End, 4-3
Cover, Hole, Pump, Fuel [Ku], 5-16
Cover, Hppr, 2-63
Cover, Hppr, Re-Work [S20], 3-63
Cover, Lever, 5-24
Cover, Mold, 2-71
Cover, Plt, Floor, 2-37
Cover, Pump, 5-22
Crank Pin, Metal, 5-11
Crankcase Assy [Ku], 5-3
Crankshaft Mtl1(02), 5-11
Crankshaft, Keyway, 5-11
Crankshaft, Metal [Ku], 5-18
Cshaft Sleeve, 5-11
Cshft Mtl 1, 5-11
Cshft Mtl1, 5-11
Cyl, Hyd, 2.5b 9.0l 01.50strk, 2500, 3-23
Cyl.Head Bolt, 5-5
Cylinder, Hyd, 2.0b 08.0l 04.00strk 2500, 2-67
Cylinder, Hyd, 2.0b 15.0l 08.00strk 1500, 2-41
Cylinder, Hyd, 3.0b 24.8l 13.50strk 3000, 2-57

D

Damper, Inlet, 2-51
Deflector, Hppr, Lh, 2-59, 2-61
Deflector, Hppr, Rh, 2-59, 2-61
Detent Kit, In [Eaton], 4-11
Diode, Ele, Plug, 2-19, 3-23, 3-59
Dipstick [Ku], 5-17
Dipstick, Oil [Ku], 5-17
Disc, 0.06, 04.39d 01.67b, 4/.30h 3.8bc, 2-45
Disc, 0.08, 04.39d 02.56b, 4/.28h 3.8bc, 2-45
Door Wldt, Brush, Lh, 2-9
Door Wldt, Brush, Rh, 2-7
Door Wldt, Cab, 3-17
Door Wldt, Cleanout [S20], 2-71
Door Wldt, Dump, Hppr, 2-67
Door Wldt, Wand, Vacuum, 3-39
Door, Access, Hppr, 2-59, 2-61
Draincock Asy, 5-3
Drive Shaft, 4-8
Drive, Motor, Hyd, 4-5
Drive, Motor, Hyd [En], 4-7
Drive, Valve, Steering, 4-13
Duct, Vyl, 0.74 X 1.50 .75d Max 48.0l, 3-7, 3-9, 3-15

E

Elbow, Mold, 2-71
Element, Fltr, Air, 1-1, 2-27
Element, Fltr, Fuel [Dn], 1-1, 2-31
Element, Fltr, Hepa, 10 X 18 X 4.87 S20, 3-65
Element, Fltr, Hyd Oil, 1-1, 2-83
Element, Fltr, Oil, Spin-on [Ku], 1-1, 5-7
Element, pump, 5-15
End Cap, Motor, Hyd [En], 4-7
End Cap, Motor, Hyd [En], 4-5
Engine, Dsl, Kubota D1005 [2008] (See Engine Breakdown), 2-23
Extinguisher Kit, Fire, Ci [S20], 3-40
Extinguisher, Fire, 2.5 Lb Dry, 3-40

F

Fan, 5-35
Fan, Defroster, 12vdc, 07.3d, 3-15
Filter Assy, Air, 2-27
Filter Assy, Fuel, Dsl, 2-31
Filter Assy, Hyd, 10mic 035gpm, Spin-On, 2-83
Filter Box Wldt, Hepa, Lower [S20], 3-65
Filter, Cyl, 11.09d, 13.31l, 6.724 Id, 1-1, 2-71
Filter, In-Line, Pf06/Pf06 60 Micron, 3-51
Fitting, Banjo, Fuel, 2-31
Fitting, Body, Nozzel, Brs, 3-55, 3-57
Fitting, Brs, 3/8npt, Valve, Breather, 3-51
Fitting, Brs, E90, If03/Pm02, 2-31
Fitting, Brs, E90, If05/Pm04, 2-31
Fitting, Brs, Str, Bm03/Pm02, 2-71
Fitting, Brs, Str, If05/Pm02, 2-31
Fitting, Brs, Str, Pf02/Pm06, 2-31
Fitting, Cap, Brs, 3-55, 3-57
Fitting, Draincock, .25npt, 2-29
Fitting, Draincock, E90, .25npt, 3-51
Fitting, Extension 1/8-Npsf X 20, 2-31
Fitting, Grease, Str Pm04 .47l, 2-55
Fitting, Grease, Str Pm04 .63l, 2-41
Fitting, Hyd, E45, Fm08/Om10, 2-83
Fitting, Hyd, E45, Fm10/Om10, 2-41
Fitting, Hyd, E45, Jm08/Om10, 2-83
Fitting, Hyd, E45, Jm10/Om10, 2-41
Fitting, Hyd, E90, Fm04/Om04, 2-41, 2-67, 2-83, 2-87, 3-23
Fitting, Hyd, E90, Fm04/Om06, 2-85
Fitting, Hyd, E90, Fm06/Om06, 2-41, 2-57, 2-85, 2-87
Fitting, Hyd, E90, Fm06/Om08, 2-81
Fitting, Hyd, E90, Fm08/Om08, 2-81
Fitting, Hyd, E90, Fm08/Om10, 2-49, 3-25
Fitting, Hyd, E90, Fm08/Om12, 2-83
Fitting, Hyd, E90, Fm12/Om12, 2-83
Fitting, Hyd, E90, Jm04/Om04, 2-41, 2-67, 2-83, 2-87, 3-23
Fitting, Hyd, E90, Jm04/Om06, 2-85
Fitting, Hyd, E90, Jm06/Om06, 2-41, 2-57, 2-85, 2-87
Fitting, Hyd, E90, Jm08/Om08, 2-81
Fitting, Hyd, E90, Jm08/Om10, 2-49, 3-25
Fitting, Hyd, E90, Jm08/Om12, 2-83
Fitting, Hyd, E90, Jm12/Om12, 2-83
Fitting, Hyd, Plug, Jm08, 2-23
Fitting, Hyd, Plug, Om04, 4-7, 4-8
Fitting, Hyd, Plug, Om08, 4-3
Fitting, Hyd, Plug, Om20, 4-7
Fitting, Hyd, Plug, W/ Org, Valve, 4-11
Fitting, Hyd, Rst, Fm04/Of04, .055, 2-57
Fitting, Hyd, Rst, Jf04/Jm04, .055, 2-57
Fitting, Hyd, Str, Ff06/Fm04, 2-21
Fitting, Hyd, Str, Ff08/Fm06, 2-49, 3-25
Fitting, Hyd, Str, Fm04/Om04, 2-45, 3-27
Fitting, Hyd, Str, Fm04/Om06, 2-57, 2-85
Fitting, Hyd, Str, Fm06/Fm06 Bh, 3-29
Fitting, Hyd, Str, Fm06/Om06, 2-21, 2-87
Fitting, Hyd, Str, Fm06/Om08, 2-45, 2-81
Fitting, Hyd, Str, Fm08/Om08, 2-81, 2-87
Fitting, Hyd, Str, Fm08/Om12, 2-83
Fitting, Hyd, Str, Fm10/Om10, 2-41
Fitting, Hyd, Str, Fm10/Om12, 2-81
Fitting, Hyd, Str, Fm12/Om10, 2-81
Fitting, Hyd, Str, Fm6/Om08, 2-85
Fitting, Hyd, Str, Jf06/Jm04, 2-21
Fitting, Hyd, Str, Jf08/Jm06, 2-49, 3-25
Fitting, Hyd, Str, Jf12/Jm08, 2-23
Fitting, Hyd, Str, Jm04/Om04, 2-45, 3-27
Fitting, Hyd, Str, Jm04/Om06, 2-57, 2-85
Fitting, Hyd, Str, Jm06/Jm06, 3-29
Fitting, Hyd, Str, Jm06/Om06, 2-21, 2-87
Fitting, Hyd, Str, Jm06/Om08, 2-45, 2-81, 2-85
Fitting, Hyd, Str, Jm08/Om08, 2-81, 2-87
Fitting, Hyd, Str, Jm08/Om12, 2-83
Fitting, Hyd, Str, Jm10/Om10, 2-41
Fitting, Hyd, Str, Jm10/Om12, 2-81
Fitting, Hyd, Str, Jm12/Om10, 2-81
Fitting, Hyd, Str, Om04/Qm04, 2-87
Fitting, Hyd, Str, Pf02/Pm04, 2-31
Fitting, Hyd, Str, Pm02/Pm02, 2-27, 2-31
Fitting, Hyd, Str, Spcl, 2-23
Fitting, Hyd, Tee, F06/Fm06/Fm06, Br, 2-85
Fitting, Hyd, Tee, Ff04/Fm04/Fm04, Run, 3-27
Fitting, Hyd, Tee, Ff06/Fm06/Fm06, Run, 2-21
Fitting, Hyd, Tee, Fm06/Fm06/Om06, Run, 2-83
Fitting, Hyd, Tee, Jf04/Jm04/Jm04, Run, 3-27
Fitting, Hyd, Tee, Jf06/Jm06/Jm06, Br, 2-85
Fitting, Hyd, Tee, Jf06/Jm06/Jm06, Run, 2-21

Fitting, Hyd, Tee, Jm06/Jm06/Om06, Run, 2-83
Fitting, Nyl, Qdc, E90, Bm06/ Qm10, 3-51
Fitting, Pipe, Plug [Ku], 5-7, 5-32
Fitting, Pipe, Water [Ku], 5-33
Fitting, Plstc, E90, Bm04/Pm04, Nyl, 3-51
Fitting, Plstc, E90, Bm06/Bm06, 3-51
Fitting, Plstc, E90, Bm06/Pm04, Nyl, 3-55, 3-57
Fitting, Plstc, Str, Bm04, Cplg, Male, 3-51
Fitting, Plstc, Str, Bm04, Cplg,Fem[Tco], 3-51
Fitting, Plstc, Str, Bm06, Cplg, Fem, 3-51
Fitting, Plstc, Str, Bm06, Cplg, Male, 3-51
Fitting, Plstc, Str, Bm06/Bm06, 3-51
Fitting, Plstc, Str, Bm06/Pm06, 3-51
Fitting, Plstc, Str, Pf04/Pf04, Bh, 3-51
Fitting, Plstc, Tee, Bm03/Bm06/Bm06, Br, 3-51
Fitting, Plstc, Y, Bm06/Bm06/Bm06, Nyl, 3-57
Fitting, Plug, Org, #6, Valve [Cec], 4-11
Fitting, Plug, Pump, Inj [Ku], 5-13
Flange, Brg, 1.9id 2h, 2-45
Flange, Motor, Hyd [En], 4-5, 4-7
Flange, Pump, Water [Ku], 5-33
Flange, sleeve, 5-15
Flange, Water [Ku], 5-32
Flap, Recirculation, 1-1, 2-5
Flap, Tire 2F 500, 3-43, 3-46, 3-47
Flap, Tire, 8.00 [Zf500], 2-41
Flasher, 12vdc [Hd552ps83], 3-3, 3-5, 3-7, 3-9
Flywheel,Comp, 5-20
Follower, Screw, Pump, Inj [Ku], 5-13
Frame Kit, Hook, Winch, 3-70
Frame Wldt, Main, Gas/Lpg/Dsl, 2-5
Frame, End, Drive, 5-31
Fuelline, .31d 05if/ Stl, 2-31
Fuelline, .31d 05if/05if, Stl, 2-31
Fuelline, Return, Stl, 2-31
Fuse, Blade, 005a, 32vdc [Mini], 3-15, 3-67
Fuse, Blade, 015a, 32vdc [Mini], 2-19, 3-59
Fuse, Blade, 020a, 32vdc [Mini], 2-19
Fuse, Blade, 030a, 32vdc, 2-97

G

Gasket, 5-3, 5-15, 5-22, 5-24, 5-25, 5-26, 5-32, 5-36
Gasket [Ku], 5-22
Gasket, .19, 4.05id 5.29od [Buna], 3-51
Gasket, Bearing, Case [Ku], 5-18
Gasket, Cap, Breather, Hyd, 2-83
Gasket, Case, Gear [Ku], 5-18
Gasket, Cover, 1-1, 2-71, 3-65
Gasket, Cover, Valve, 5-12
Gasket, deliv valve, 5-15
Gasket, Door, Wand, Vacuum, 3-39
Gasket, F/ Bolt [Ku], 5-25
Gasket, F/ Screw [Ku], 5-13
Gasket, F/Bolt, 5-12
Gasket, Ftg, Banjo [Ku], 5-13
Gasket, Gearcase, 5-7
Gasket, Head, Cyl [Ku], 5-5
Gasket, Headlight [S20], 2-59, 2-61
Gasket, Hsg, Thermostat [Ku], 5-32
Gasket, Manifold, Intake [Ku], 5-37
Gasket, Plug, Drain [Ku], 5-4
Gasket, Pump, Fuel [Ku], 5-16
Gasket, Pump, Water [Ku], 5-33
Gasket, Sender, Fuel, 2.7d 1.5b 5/ 2.1bc, 2-31
Gasket, Solenoid, Throttle [Ku], 5-23
Gasket, Tray, 2-69, 2-71
Gauge, Fuel, 2-19
Gauge, Hourmeter, 05-277vdc/Vac, 2-Hole, 2-19
Gauge, Sensing, Level, 2-83
Gear, Camshaft, 5-19
Gear, Crankshaft, 5-11
Gear, Gc .750 Bn, 4-9
Gear, Idle, 5-19
Gear, Injection, Pump [Ku], 5-21
Gear, Oil Pump, 5-11
Gear, Ring [Ku], 5-20
Gear, Starter [Ku], 5-31
Gear,Governor, 5-21
Geroler Assy, Pump, Gear, 4-8
Gerotor Set [En], 4-7
Gerotor, Motor, Hyd, 4-5
Gerotor, Valve, Steering, 4-13
Glowplug [Ku], 5-26
Gov.Sleeve, 5-21
Gov.Spring, 5-24
Grip, Vyl, 2-51, 2-85
Grommet, Pye, 0.37id, F/1.5h, .13 Matl, 3-51
Grommet, Rbr, 0.69id, F/1.0h, .25 Matl, 2-59, 2-61
Grommet, Rbr, 0.89id, F/1.2h, .14 Matl, 3-67
Grommet, Rbr, 1.00id, F/1.4h, .12 Matl, 2-53
Grommet, Rbr, 1.06id, F/1.4h, .19 Matl, 2-73, 3-7, 3-9, 3-67
Grommet, Rbr, 1.50id, F/1.8h, .19 Matl, 3-55, 3-57
Grommet, Rbr, 1.62id, F/1.9h, .13 Matl, 2-31
Grommet, Taillight, 5.44 X 3.56, 2-5
Gskt,Ex-Manifol, 5-36
Guard, Belt [Ku], 5-34
Guard, Brush, 2-49, 3-25
Guard, Exhaust, 2-33
Guard, Fan, Eng, Perf, 2-29
Guard, String, Motor, Brush, 2-49, 3-25
Guide, Valve, Exhaust, 5-5
Guide, Valve, Inlet, 5-5

H

Handle Wldt, Brush, Side, 2-47
Handle Wldt, Door, 3-11, 3-13
Handle Wldt, Latch, Shrd, 2-15
Handle Wldt, Lift, Brush, 2-43
Handle, Cntrl, Valve, 2-85
Handle, Door, 3-17
Harness Kit, Main, Dsl, Replmt [S20], 2-97
Harness, Alarm / Strobe [S20], 3-3, 3-5
Harness, Alarm / Strobe, Ohg [S20], 3-7, 3-9
Harness, Blu Spotlight [S20], 3-67, 3-68
Harness, Brush, Side, Lh, 12vdc [S20], 3-26
Harness, Cntrl, Wet Dust [S20ic], 3-61
Harness, Ele [Extn, Telemetry], 3-49
Harness, Fan, Ic [S20], 3-15
Harness, Hppr, 12vdc [S20], 2-97
Harness, Hppr, Cover [S20], 2-97
Harness, Main, Dsl [S20], 2-97
Harness, Seat [S20], 3-19
Harness, Shakr, Motor [S20], 2-97
Harness, Wiper, Windshield, Ic [S20], 3-15
Harness, Wire, Seat [S20], 2-13
Head, Cyl, W/O Valve [Ku], 5-5
Headlight Kit, Led, Replmt [S20ic], 2-59, 2-61
Headlight, Led, Rnd [S20/S30 Ic], 2-59, 2-61
Hepa Airbox, Upper [S20], 3-65
Hinge, .25pin .12 3.0w 03.0l, 4/0.28sl, 2-59, 2-61
Hinge, .25pin .12 3.0w 04.5l, 6/0.38sl, 2-11, 2-13
Hinge, .38pin .12 3.5w 07.8l, 4/0.38h, 2-7, 2-9
Hinge, .38pin .12 3.5w 4.0l [Oal], 2-63
Holder, 5-21
Holder, Brush [Ku], 5-31
Holder, deliv valve, 5-15
Holder,Gear, 5-21
Hood, Stiffener Wldt Lh [S20], 3-63
Hood, Stiffener Wldt Rh [S20], 3-63
Hook, Engine, 5-5
Hook, Engine 2, 5-5
Hopper [S20], 2-59
Hopper Switch Position Kit, Ci [S20], 2-57
Hopper Wldt, Stl, 2-61
Horn, 12vdc, Dba [Wolo], 2-5
Hose Assy, W/2cuff, 2.0d 120l 2.0/2.0, 3-39
Hose, 0050, 04, If05str / Im05str, 10.0, 2-31
Hose, Afmkt, Pvc, Brd, 0.38id, 08ft, Clr, 3-51, 3-55, 3-57
Hose, Afmkt, Pvc, Brd, 0.38id, 20ft, Clr, 3-57
Hose, Afmkt, Pvc, Clr, 0.25id, 03ft, 3-51
Hose, Coolant, Mold, 1.00id To 1.00id, 2-29
Hose, Flex, Vacuum, 04.0d, 010.5l 4x2end, 1-1, 2-53
Hose, Flex, Vacuum, 04.0d, 050.0l, 1-1, 2-53
Hose, Fuel [Ku], 5-26
Hose, Fuel, 0.18id, 29.0l, 2-31

Hose, Fuel, 0.31id, 05.0l, 2-31
Hose, Hyd, Low08, Jf08str/Jf08str, 029.0, 2-23
Hose, Hyd, Med04, Jf04e90/Jf04str, 064.0, 2-77
Hose, Hyd, Med04, Jf04str/Jf04str, 060.0, 2-77
Hose, Hyd, Med04, Of04e90/Of04str, 064.0, 2-79
Hose, Hyd, Med04, Of04str/Of04str, 060.0, 2-79
Hose, Hyd, Med06, Jf06e45/Jf06str, 017.0, 2-77
Hose, Hyd, Med06, Jf06e90/Jf06str, 042.0, 2-77
Hose, Hyd, Med06, Jf06e90/Jf06str, 044.0, 2-77
Hose, Hyd, Med06, Jf06e90/Jf06str, 068.0, 3-29
Hose, Hyd, Med06, Jf06e90/Jf06str, 114.0, 2-77, 3-29
Hose, Hyd, Med06, Jf06str/Jf06str, 018.0, 2-77
Hose, Hyd, Med06, Of06e90/Of06str, 020.0, 2-79
Hose, Hyd, Med06, Of06e90/Of06str, 042.0, 2-79
Hose, Hyd, Med06, Of06e90/Of06str, 068.0, 3-29
Hose, Hyd, Med06, Of06e90/Of06str, 114.0, 2-79, 3-29
Hose, Hyd, Med06, Of06str/Of06str, 018.0, 2-79
Hose, Hyd, Med08, Jf08e90/Jf08str, 048.0, 2-77
Hose, Hyd, Med08, Jf08e90/Jf08str, 072.0, 2-77
Hose, Hyd, Med08, Jf08str/Jf08str, 036.0, 2-77
Hose, Hyd, Med08, Of08e90/Of08str, 048.0, 2-79
Hose, Hyd, Med08, Of08e90/Of08str, 072.0, 2-79
Hose, Hyd, Med08, Of08str/Of08str, 036.0, 2-79
Hose, Hyd, Suc12, Jf12e45/Jf12str, 048.0, 2-77
Hose, Hyd, Suc12, Of12e45/Of12str, 048.0, 2-79
Hose, Hyd, Tc04, Jf04e90/Jf04str, 025.0, 2-77
Hose, Hyd, Tc04, Jf04e90/Jf04str, 036.0, 2-77
Hose, Hyd, Tc04, Jf04str/Jf04e90, 070.0, 2-77
Hose, Hyd, Tc04, Jf04str/Jf04str, 025.0, 2-77
Hose, Hyd, Tc04, Jf04str/Jf04str, 042.0, 3-29
Hose, Hyd, Tc04, Jf04str/Jf04str, 048.0, 3-29
Hose, Hyd, Tc04, Jf04str/Jf04str, 058.0, 3-29
Hose, Hyd, Tc04, Of04e90/Of04str, 020.0, 2-79
Hose, Hyd, Tc04, Of04e90/Of04str, 36.0, 2-79
Hose, Hyd, Tc04, Of04str/Of04e90, 070.0, 2-79, 3-29
Hose, Hyd, Tc04, Of04str/Of04str, 048.0, 3-29
Hose, Hyd, Tc04, Of04str/Of04str, 058.0, 3-29
Hose, Hyd, Tc04, Of06e90/Of04str, 064.0, 2-79
Hose, Hyd, Tc06, Jf06e90/Jf06str, 028.0, 2-77
Hose, Hyd, Tc06, Jf06e90/Jf06str, 029.0, 2-77
Hose, Hyd, Tc06, Jf06e90/Jf06str, 032.0, 2-77
Hose, Hyd, Tc06, Jf06e90/Jf06str, 034.0, 2-77
Hose, Hyd, Tc06, Jf06e90/Jf06str, 086.0, 3-29
Hose, Hyd, Tc06, Jf06e90/Jf06str, 120.0, 3-29
Hose, Hyd, Tc06, Jf06str/Jf06str, 032.0, 2-77
Hose, Hyd, Tc06, Jf06str/Jf06str, 039.0, 2-77
Hose, Hyd, Tc06, Of06e45/Of06str, 032.0, 2-79
Hose, Hyd, Tc06, Of06e90/Of06str, 028.0, 2-79
Hose, Hyd, Tc06, Of06e90/Of06str, 029.0, 2-79
Hose, Hyd, Tc06, Of06e90/Of06str, 032.0, 2-79
Hose, Hyd, Tc06, Of06e90/Of06str, 086.0, 3-29
Hose, Hyd, Tc06, Of06e90/Of06str, 120.0, 3-29
Hose, Hyd, Tc06, Of06e90/Of06str, 34.0, 2-79
Hose, Hyd, Tc06, Of06str/Of06str, 032.0, 2-79
Hose, Hyd, Tc06, Of06str/Of06str, 039.0, 2-79
Hose, Hyd, Tc10, Jf10e45/Jf10str, 056.0, 2-77
Hose, Hyd, Tc10, Jf10e90/Jf10str, 074.0, 2-77
Hose, Hyd, Tc10, Of10e45/Of10str, 056.0, 2-79
Hose, Hyd, Tc10, Of10e90/Of10str, 074.0, 2-79
Hose, Intake, Mold, 1.75id 1.75id [Epdm], 2-27
Hose, Intake, Mold, 1.75id 2.00id [Epdm], 2-27
Hose, Vacuum, 0.16id X 060.0l, 2-67
Hose, Water [Ku], 5-32
Housing, 4-3
Housing Assy, Nozzle, 5-26, 5-27
Housing Wldt, Fan, 2-53
Housing, Brg [Cl], 4-8
Housing, End [Bn], 4-9
Housing, Fan, Rear, Impeller, 2-53
Housing, Flng, Brg, 2-53
Housing, Flywheel, Mach [D1005 Kubota], 2-25
Housing, Motor, Hyd [En], 4-5, 4-7
Housing, Sppt, Drive, Rear, 2-41
Housing, Thermostat [Ku], 5-32
Housing, Valve, 4-8
Hub Assembly, 3-44, 3-45, 3-46, 3-47
Hub Assy, Wheel, 5 Bolt 4.50bc 1.5 Taper, 2-41
Hub, Adapter, Brush, 1.00b, 2-49, 3-25
Hub, Mtg, Arm, Cntrl, Pintle, 2-73
Hub, Wheel w/studs, 3-44, 3-45, 3-46, 3-47

I

Idle App.Assy, 5-22
Impeller, 9.00d X 1.40w X 0.376b, 2-53
Impeller, Pump, Water [Ku], 5-33
Indicator, Service, Fltr, Air [20h20 Dn], 2-27
Inject.Pipe 1, 5-26
Inject.Pipe 2, 5-26
Inject.Pipe 3, 5-26
Inlet Valve, 5-9
Innertube, 16 X 6-8, 2-41
Insert, Plt, Cam, Pump, Hyd, 4-3
Instr, Motor, Hyd, Gear, Repair, 4-8
Instr, Motor, Hyd, Repair [En], 4-5, 4-7
Instr, Pump, Repair, 4-3
Instr, Seal Kit, Motor, [Barns&Mte], 4-9
Instr, Use&Care, Wallchart [Ts20] (ONLINE ONLY), 3-71
Instr, Valve, Hyd, Repair [En], 4-11
Instr, Valve, Steering, Repair, 4-13
Insulation, Acstc, 3-13
Insulation, Acstc, .50, 14.6 X 08.1, 2-53
Insulation, Acstc, 0.5, 13.0 X 17.8 Ntch, 2-11, 2-13
Insulation, Acstc, 0.5, 15.4 X 20.5 Ntch, 2-11, 2-13
Insulation, Acstc, 0.5, 2.3 X 11.1 Ntch, 2-11, 2-13
Insulation, Acstc, 0.5, 20.6 X 03.3, 2-53
Insulation, Acstc, 0.5, 21.3 X 03.3, 2-53
Insulation, Acstc, 0.5, 21.4 X 20.6 C-O, 2-11, 2-13
Insulation, Acstc, 0.5, 21.5 X 12.2 Ntch, 2-11
Insulation, Acstc, 0.5, 31.6 X 14.1 Ntch, 2-11, 2-13
Insulation, Acstc, 0.5, 32.0 X 21.6 Ntch, 2-11
Insulation, Acstc, 0.5, 4.5 X 11.0 Ntch, 2-11, 2-13
Insulation, Acstc, 0.5, 9.2 X 11.8 Ntch, 2-11, 2-13
Insulation, Acstc, 0.8, 06.6 X 03.0 Slit, 2-11

Insulation, Acstc, 0.8, 19.9 X 18.0 Cham, 2-19
Insulation, Acstc, 1.0, 14.3 X 07.9, 2-53
Insulation, Acstc, 2.0, 02.0 X 12.0, 2-5
Insulation, Acstc, Rnd, 0.8, 02.5d 0.5h, 2-21
Isolator, Vib, .50d, 2-25
Isolator, Vib, Exhaust, 0.3 2.7w 3.2w, 2-33
Isolator, Vib, Flng, 1.3l .5b 2/.39h, 2-23

J

Joint Pipe, 5-7
Joint, Eye, 5-13

K

Key, Ignition [Set Of 2], 2-19
Key, Shaft, Pump, Hyd, 4-3
Key, Sq [Bn], 4-9
Key, Sq, 0.12 X 0.12, 1.00l, 2-53
Key, Sq, Pump, Hyd, 4-8
Key, Woodruff, 0.19 0.75 [Asa0606], 2-53
Key, Woodruff, 0.25 1.00 [Asa#0808], 4-7
Key,Woodruff, 5-21
Keychain, Rectangle, Parts & Service, 2-19
Keyway, 5-19
Knob, 1.12d 3.86l M10 X 1.5, Plstc Tpr], 2-43, 2-47
Knob, Cable Lever, Throttle, 2-19
Knob, Star, 2.75d 4ear 1.1l M8x1.25, 2-71, 3-65
Knob, Tee, 0.38-16, 2.5 X 1.0 1.1l,Plstc, 2-21

L

Label [Cyclone, Sweepmax S20], 2-98
Label Set, Info/Hzrd [S20], 2-98
Label Set, Hi-Temp, 2-98
Label Set, Opertnl [S20 Dsl], 2-98
Label, Hook, Winch, 3-70
Label, Model [S20], 2-98
Label, Watershield [S20], 3-59
Lamp, 12vdc, 37.5watt, Halogen, 2-59, 2-61
Latch, 2-15, 2-63, 3-17
Latch, Door, 2-59, 2-61
Latch, Door [Southco 91-562-07], 2-71, 3-65
Latch, Paddle, Rwk, 2-17
Latch, Swell, 2-7, 2-9
Lever Assy, Fork, Govnr [Ku], 5-24
Lever, Adj, Metal, 2-47, 3-23
Lever, Adj, Plstc, 2-43
Lever, Brush Lift, 2-43
Lever, Comp, 5-25
Lever, Eng Stop, 5-25
Lever, Fork [Ku], 5-24
Lever, Fork, Shaft [Ku], 5-24
Lever, Stop, Brake, 2-39
Lever, Vacfan, 2-51
Light, Led, .312d, 12 Vdc [Tri-Color], 3-59
Light, Panl, 14vdc, 1.1 X 1.0, 2-19
Light, Spot, 12vdc, 21cp, Rwk 44025a, 3-3, 3-5, 3-7, 3-9
Light, Spot, Blue, Led, 3-67
Light, Strobe, Amb, Led, 3-3, 3-5, 3-7, 3-9
Link Assy, Valve Handle, 2-85
Link, 0.25, 1.0w 18.06l, 1/0.6h 2/ M8, 2-37
Link, Lift, Main Brush, 2-43
Link, Limiter, Spd, 2-37

M

Maint Kit, 400hr [S20 Dsl, Kubo], 1-1
Maint Kit, 800hr [S20 Dsl, Kubo], 1-1
Manifold Assy, Inlet, 5-37
Manifold,Exh, 5-36
Manual, Oprtr [S20 Dsl, Cn], 3-71
Manual, Oprtr [S20 Dsl, Pbt], 3-71
Manual, Oprtr [S20 Dsl, En], 3-71
Manual, Oprtr [S20 Dsl, Es], 3-71
Manual, Oprtr [S20 Dsl, Fr], 3-71
Manual, Oprtr [S20 Dsl, Jp], 3-71
Manual, Parts [S20 Dsl, En], 3-71
Manual, Service [S20 Gas/Lpg/Dsl, En], 3-71
Metl1, Side, 5-11
Mirror, Convex, 06.7 X 06.2, 3-11, 3-13
Mirror, Flat, 05.0d, 3-11, 3-13
Molding, Afmkt, Trim, Pvc, .18 .31, 08Ft, 3-11, 3-13
Molding, Afmkt, Trim, Pvc, .18 .31, 20ft, 3-63
Molding, Trim, Pvc, .00-.06 02.2l, 2-53
Molding, Trim, Pvc, .08-.11 01.0l, 2-5
Molding, Trim, Pvc, .08-.11 05.0l, 2-5, 2-9
Molding, Trim, Pvc, .08-.11 39.2l, 3-39
Motor Assy, Ele, Wiper, 12vdc 85deg, 3-15
Motor, Ele, 12vdc 2108rpm 0.09hp 07.0a, 2-71
Motor, Hyd, Gear, Int 02.2 Bi-Dir 1500, 2-45, 4-7
Motor, Hyd, Gear, Int 02.2 Bi-Dir 1500 (See Breakdowns), 2-45
Motor, Hyd, Gear, Int 09.7 Bi-Dir 1500, 2-49, 3-25, 4-5
Motor, Hyd, Gear, Int 09.7 Bi-Dir 1500 (See Breakdowns), 2-49, 3-25
Motor, Hyd, Gear, Int 18.7 Bi-Dir 3000, 4-8
Motor, Hyd, Gear, Int 18.7 Bi-Dir 3000 (See Breakdowns), 2-41
Muffler, Exhaust, 2-33

N

Nozzel, Spray, 110 Deg, 0.05 Gpm, 3-55, 3-57
Nozzle [Ku], 5-27
Nozzle, Spring [Ku], 5-27
Nut, 5-9, 5-22, 5-25, 5-31, 5-36
Nut [Ku], 5-13
Nut [Ku], 5-27
Nut-Wheel .50-20 60 Angle, 3-44, 3-45, 3-46, 3-47
Nut, Cap, 5-21
Nut, Coil, Nyl Patch, 4-16, 4-17
Nut, Flange [Ku], 5-16
Nut, Flng [Ku], 5-26
Nut, Hex , Flange[Ku], 5-25
Nut, Hex [Ku], 5-7, 5-31
Nut, Hex, Cap, 5-12
Nut, Hex, Flexlock, .31-24, Thin, 2-53
Nut, Hex, Flexlock, .38-24, 2-53
Nut, Hex, Flexlock, .50-13, Thin, 2-49, 3-25
Nut, Hex, Flng, M10 X 1.50, 2-29, 2-55
Nut, Hex, Flng, M12 X 1.75, 3-11, 3-13
Nut, Hex, Flng, M6 X 1.00, 2-23, 2-31, 2-53
Nut, Hex, Flng, M8 X 1.25, 2-5, 2-11, 2-13, 2-19, 2-23, 2-25, 2-27, 2-29, 2-31, 2-37, 2-51, 2-55, 2-63, 2-67, 3-3, 3-5, 3-11, 3-13
Nut, Hex, Jam, .25-28, 2-39
Nut, Hex, Jam, .50-13, 2-15
Nut, Hex, Jam, .75-16, 2-41
Nut, Hex, Jam, M20 X 1.5, 2-21
Nut, Hex, Lock, .25-20, Nl, 2-73
Nut, Hex, Lock, .25-28, Nl, 2-73
Nut, Hex, Lock, .31-18, Nl, 2-15
Nut, Hex, Lock, .31-24, Nl, 2-7, 2-9
Nut, Hex, Lock, .75-10, Nl, 2-41, 2-45
Nut, Hex, Lock, #06-32, Nl, 2-51
Nut, Hex, Lock, #10-32, Nl, 2-71
Nut, Hex, Lock, M10 X 1.5, Nl, 2-41, 2-47, 2-55, 2-59, 2-61, 3-19, 3-20
Nut, Hex, Lock, M10 X 1.5, Nl, Ss, 2-41, 3-46, 3-47
Nut, Hex, Lock, M12 X 1.75, Nl, 2-23, 2-25, 2-39, 2-41, 2-45, 2-55
Nut, Hex, Lock, M16 X 2.00, Nl, 2-49, 3-25
Nut, Hex, Lock, M4 X 0.70, Nl, 2-67, 2-71, 3-3, 3-5, 3-7, 3-9, 3-15
Nut, Hex, Lock, M4 X 0.70, Nl, Ss, 3-51, 3-65
Nut, Hex, Lock, M5 X 0.80, Nl, 2-19, 2-39, 2-67, 3-3, 3-5, 3-7, 3-9, 3-15, 3-17
Nut, Hex, Lock, M6 X 1.00, Nl, 2-15, 2-19, 2-21, 2-31, 2-39, 2-51, 2-53, 2-57, 2-59, 2-61, 2-63, 2-67, 2-85, 3-3, 3-5, 3-7, 3-9, 3-11, 3-13, 3-17, 3-39, 3-49, 3-53, 3-63
Nut, Hex, Lock, M8 X 1.25, Nl, 2-5, 2-11, 2-13, 2-31, 2-33, 2-37, 2-39, 2-43, 2-45, 2-47, 2-55, 2-59, 2-65, 2-67, 2-69, 2-83, 3-3, 3-5, 3-7, 3-9, 3-17, 3-19, 3-23, 3-31, 3-35, 3-67
Nut, Hex, Lock, M8 X 1.25, Nl, Ss, 2-49, 3-25
Nut, Hex, M8 X 1.25, 3-33, 3-37

Nut, Hex, Sltd, .75-16, 2-39, 4-7
Nut, Hex, Sltd, 1.00-20, 2-41
Nut, Hex, Std, .25-28, 2-73
Nut, Hex, Std, .25-28, Lh, 2-39
Nut, Hex, Std, M3 X 0.50, 8, 2-19, 2-57, 3-7, 3-9
Nut, Hex, Std, M6 X 1.00, 8, 2-19, 2-47, 3-23
Nut, Hex, Std, M6 X 1.00, Ss, 2-49, 3-23, 3-25
Nut, Nozzle [Ku], 5-27
Nut, Push, Bolt Retention, Stl,5/16 Thrd, 2-13
Nut, Short, 4-14, 4-15
Nut, Sl, Pump, Hyd, Gear, 4-8
Nut, Wheel, .50-20 X 60 Angle, 2-41
Nut,Cap, 5-22

O

O ring, 5-15
O-Ring, 5-3, 5-17
Ohg Kit, Ci [S20], 3-11
Oil Seal, 5-25
Oil Switch, 5-5
Oil, Hyd [El, Iso 100, 01Gal], 1-1
Oprtr Station, W/ Label,[S20] Jp, 2-19
Oprtr Station, W/ Label,[S20] Na, 2-19

P

Pad, Pedal, Brake, 3.96l 2.36w 0.75, 2-39
Paint, Airdry, Blk, 12oz, 1-1
Paint, Airdry, Gray, 12oz [Enamel], 1-1
Paint, Airdry, Iron Gray,12oz[Pwdr Coat], 1-1
Paint, Airdry, Off-White, 12oz, 1-1
Paint, Airdry, Teal, 12oz, Solid, 1-1
Pan, Oil, Complt [Ku], 5-4
Pane Assy, Windshield, 3-15
Panel Assy, Cab, 3-15
Panel Assy, Indicator Lights, Ic, 2-19
Panel Wldt, Frame, Cab, 3-15
Panel Wldt, Frame, Rear, 3-15
Panel Wldt, Top, Ohg, 3-11, 3-13
Panel, Louver, 2-11, 2-13
Pedal Wldt, Brake, 2-39
Pedal Wldt, Propel, Lower, 2-37
Pedal, Propel, Upper, 2-37
Pin Assy, Clevis, Hppr Lift, 2-57
Pin Assy, Side Brush W/ Clip, 2-49, 3-25
Pin, 0.75d 02.0l, 1/.31h, Stl, 2-55
Pin, 1.25d 04.0l, 1/.34h, Stl, 2-55
Pin, clamp, 5-15
Pin, Clevis, 0.25d X 0.75l, 2-39, 2-49, 3-23, 3-25
Pin, Clevis, 0.31d X 0.75l, 2-23
Pin, Clevis, 0.31d X 1.62l, 3-23
Pin, Clevis, 0.37d X 0.75l, 2-49, 3-25
Pin, Clevis, 0.37d X 1.50l, 3-23
Pin, Clevis, 0.37d X 2.00l, 2-47
Pin, Clevis, 0.37d X 2.12l, 2-47
Pin, Clevis, 0.37d X 4.50l, 2-37
Pin, Clevis, 0.50d X 1.25l, 2-43
Pin, Clevis, 0.50d X 2.25l, 2-67
Pin, Clevis, 0.50d X 4.25l, 2-37
Pin, Clevis, 0.50d X 6.00l, 2-67
Pin, Cotter, .062 X 0.50, 2-39
Pin, Cotter, .094 X 1.00, 2-51
Pin, Cotter, .125 X 0.75, 2-37, 2-51
Pin, Cotter, .125 X 1.00, 2-37, 2-39, 2-67
Pin, Cotter, .125 X 1.25, 2-45, 3-23
Pin, Cotter, .187 X 1.75, 2-57
Pin, Cotter, .250 X 1.25, 2-55
Pin, Cotter, Hair, 0.31D .058 Wir, 2-11, 2-13, 2-49, 3-23, 3-25
Pin, Cotter, Hair, 0.38d .072 Wir, 2-5, 2-23
Pin, Cotter, Hair, 0.38d .093 Wir, 2-43, 2-47
Pin, Cotter, Hair, 13mmd 3mm Wir, 2-37
Pin, Dowel, Pump, Hyd, 4-3
Pin, Drive [Bn], 4-9
Pin, Hitch, .500d X 6.00l, Pl, 3-21
Pin, joint, 5-15
Pin, Pipe, 5-3
Pin, Piston, 5-11
Pin, Pump, Hyd, Gear, 4-8
Pin, Roll, .250d X 0.75l, .250/.256, 2-55
Pin, Roll, .250d X 3.50l, .250/.256, 2-45
Pin, Roll, .312d X 0.75l, .312/.318, 2-25
Pin, Spring [Ku], 5-9, 5-25
Pin, Straight, 5-3
Pin, Straight [Ku], 5-7
Pin, tappet guide, 5-15
Pin, Valve, Steering, 4-13
Pin,Pipe, 5-3
Pin,Start Sprngku, 5-3
Pinion, Bevel, 5-31
Pipe Asy,Oflow, 5-26
Pipe, Breather [Ku], 5-37
Pipe, Clip [Ku], 5-26
Pipe, Fuel, Overflow [Ku], 5-26
Pipe, Water, 5-12
Pipe, Water [Ku], 5-32
Pipe, Water [Kubota], 5-32
Pipe, Water, Return, 5-32
Piston [+.5mm, Ku], 5-11
Piston, Pump, Hyd, Gear, 4-8
Piston, Std [Ku], 5-11
Pivot Wldt, 3-23
Pivot Wldt, Sba, 3-23
Plate, 5-15
Plate Assy, Control, 5-25
Plate Wldt, 3-23
Plate Wldt, Back, Hppr, 2-67
Plate Wldt, Damper, 2-51
Plate Wldt, Lh, 2-11, 2-13
Plate Wldt, Mtg, Eng, Rear, Lh, Dsl, 2-23
Plate Wldt, Mtg, Eng, Rear, Rh, Dsl, 2-23
Plate Wldt, Perma-Filter, 2-69
Plate Wldt, Pivot, 2-59, 2-61
Plate Wldt, Pivot, Stl Hppr, 2-61
Plate Wldt, Rh, 2-11, 2-13
Plate Wldt, Winch Hook, 3-70
Plate, Backing, Brake, 2-39
Plate, Cam, 4-3
Plate, Cover, 4-3
Plate, Mtg, 2-21
Plate, Mtg, Fire Extinguisher, 3-40
Plate, Mtg, Headlight, 2-59, 2-61
Plate, Mtg, Headlight [S20], 2-59, 2-61
Plate, Mtg, Isolator, 2-33
Plate, Mtg, Latch, 2-17
Plate, Mtg, Light, 3-3, 3-5
Plate, Mtg, Pin, 2-55
Plate, Mtg, Seatbelt, 3-20
Plate, Pump Mtg, 3-51
Plate, Pump, Hyd, Gear, 4-8
Plate, Retainer, Hppr, Lip, 2-61
Plate, Seal, Hyd Drive, 2-9
Plate, Shield, Exhaust, 2-33
Plate, Shield, Top, 3-15
Plate, Spacer, 2-61
Plate, Spacer, Lift Arm, 2-55
Plate, Spacer, Motor, Hyd [En], 4-5, 4-7
Plate, Sppt, Bmpr, 2-59, 2-61
Plate, Sppt, Hinge, 3-17
Plate, Support, Skirt Sbdc, 3-33, 3-37
Plate, Switch / Light Mtg, 3-59
Plate, Valve, Pump, Gear [Char Lynn], 4-8
Plate, Valve, Pump, Hyd, 4-3
Plate, Wear, 2-59
Plate, Wear, Steering Valve, 4-13
Plate,Rear End, 5-20
Plug, 5-3, 5-5, 5-7, 5-15
Plug [Bn], 4-9
Plug Assy [Cl], 4-13
Plug Assy, Hyd, 2-85, 4-11
Plug Wldt, Drive, Brush, 2-45
Plug Wldt, Idler, Brush, 2-45
Plug, Cap, Nat, 3-51
Plug, Drain, Oil [Ku], 5-4
Plug, Eng [Ku], 5-3
Plug, Expansion, 5-3
Plug, Gauge, Oil [Ku], 5-17
Plug, Hole, Rnd, 0.22H .00-.06, Blk Nyl, 3-11, 3-13
Plug, Hole, Rnd, 0.25h 0.43l, Brb, Nyl, 2-59, 2-61
Plug, Hole, Rnd, 0.25h 0.8l, Brb, Nyl, 2-5, 2-55, 2-59, 2-61
Plug, Hole, Rnd, 0.38h .3l, Plstc, 3-15
Plug, Hole, Rnd, 0.38h .4-.7, Blk Nyl, 2-5
Plug, Hole, Rnd, 0.56h .03-.12, Blk Nyl, 2-5
Plug, Hole, Rnd, 1.00h .14-.25, Blk Nyl, 3-15
Plug, Hole, Rnd, 1.37h 0.45l, Blk Nyl, 2-5
Plug, Org, 4-14
Plug, Orifice, Valve, Hyd, .047, 4-15
Plug, Pin, 5-3, 5-5
Plug, Pump, Hyd, Gear, 4-8
Plug,Drain, 5-4
Plunger, Valve, Hyd [En], 4-11
Poppet, Pump, Hyd, Gear, 4-8
Pouch, 3-69
Pouch, Manual, Weather Proof, 3-69
Pulley, Cable, 1.5d Nyl, 2-47, 3-23

Pulley, Cable, 3.0d 1.76b, .25d Cable, 2-55, 3-23
Pump Assy, Inj, Fuel (See Injector Pump Breakdown), 5-13
Pump Assy, Water [Ku], 5-33
Pump Kit, Fuel, Replmt, 2-31
Pump Kit, Hyd, Rotating [Cessna], 4-3
Pump, Fuel, 2-31
Pump, Hyd, Gear, Ext, 2, 00.39 1600, Cw (Replaced by 1071256), 4-9
Pump, Hyd, Gear, Ext, 2, 00.39 1600, Cw (See Breakdowns) (Replaced by 1071256), 2-81
Pump, Hyd, Gear, Ext, 2, 6.2cc 5.2cc, 2-81
Pump, Hyd, Piston, Var, 1.24 2500, Cw, 4-3
Pump, Hyd, Piston, Var, 1.24 2500, Cw (See Breakdowns), 2-81
Pump, Oil, 5-7
Pump, Oil, Cover [Ku], 5-7
Pump, Soltn, 13.7vdc, 65psi [Fast Ii+], 3-51
Push Rod, 5-19

R

Race, Brg, Pump, Hyd, 4-3
Rack, control, 5-15
Radiator, Alm, 2-29
Relay, 12vdc, 040a, Spdt No, 2-19, 3-59
Relief Valve [Rv08-22a-0-N-35/24], 4-16
Relief Valve [Rv10-22h-0-N-35/24], 4-17
Reservoir Assy, Hyd, 2-83
Reservoir, Hyd, 05.1gal, 2-83
Retainer, 5-31
Retainer, Gear, Starter [Ku], 5-31
Retainer, Ring, Brake, 2-39
Retainer, Seal, Dust, .12 X 0.8w X 33.6l, 2-69
Retainer, Seal, Hppr Door, Side, 2-67
Retainer, Seal, Hppr, Top, 2-5
Retainer, Skirt, 3-31, 3-35
Retainer, Skirt, .12, 1.0w X 08.1l, Pl, 2-5, 2-9
Retainer, Skirt, .12, 1.0w X 10.4l, Pl, 2-5
Retainer, Skirt, .12, 1.0w X 19.3l, Pl, 2-7
Retainer, Skirt, Lh Side, 3-33, 3-37
Rim Assy, 08.0 X 4.3, 4.5bc /5bolt, 2-41, 3-43, 3-46, 3-47
Ring [Crescent, Bn], 4-9
Ring [Ku], 5-11
Ring, Balance, Pump, Hyd, Gear, 4-8
Ring, Piston [+.5mm, Ku], 5-11
Ring, Piston, Std [Ku], 5-11
Ring, Retainer, Steering Valve, 4-13
Ring, Retainer, Valve, Hyd [En], 4-11
Ring, Retaining, 4-3
Ring, Retaining, Ext, 0.38d, [Klipring], 2-47
Ring, Retaining, Ext, 0.50d, Hd, 2-21
Ring, Retaining, Ext, 0.98d, [E-Ring], 2-57
Ring, Retaining, Int, 2.00d, 2-55
Ring, Retaining, Pump, Hyd, 4-3
Rivet, Blind, .187d X 0.53 X .62d, Alm, 3-63
Rivet, Plstc, .250d X 0.90, 2-5, 2-61, 3-69
Rocker Arm Assy, 5-9
Rod Assy, Connecting [Ku], 5-11
Rod Wldt, Damper, 2-51
Rod Wldt, Safety, Hppr Cover, 2-63
Rod-End, 0.25-28rh Fem 0.25b [Teflon], 2-73
Rod-End, 0.75-16rh Fem 0.75b, 2-41
Rod-End, 0.75-16rh Mal 0.75b [Teflon], 2-41
Rod, Bearing Set 0.2, 5-11
Rod, Bearing Set 0.4, 5-11
Rod, Latch, Tilt, Steering, 2-21
Rod, Push [Ku], 5-27
Rod, Thrd, 2 End, .25-28 16.00l, 2-39
Roller, Starter [Ku], 5-31

S

Sbdc Kit, W/ Lh Side Brush, Ci [S20], 3-35, 3-37
Sbdc Kit, W/O Lh Side Brush, Ci [S20], 3-31, 3-33
Screen, Fltr, 60 Micron, Caged Ss, 3-51
Screen, Pump, 3-51
Screw, 5-15, 5-26
Screw [Ku], 5-7
Screw, Adjusting, 5-9
Screw, Btn, M8 X 1.25 X 16, Ss, 2-11, 2-13, 2-55
Screw, Cap, 4-3
Screw, Cap, Motor, Hyd, 4-5
Screw, Cap, Steering Valve [En], 4-7
Screw, Flt, M12 X 1.75 X 80, 10.9, 2-45
Screw, Flt, Soc, .50-13 X 2.50, Al, 2-49, 3-25
Screw, Flt, Soc, M6 X 1.00 X 25, 10.9, 2-59
Screw, Flt, Soc, M8 X 1.25 X 16, 10.9, 2-37
Screw, Flt, Soc, M8 X 1.25 X 20, 18-8,Ss, 2-67
Screw, Hex [Ku], 5-13
Screw, Hex [Ku], 5-4, 5-7, 5-9, 5-18, 5-24, 5-25, 5-32, 5-34, 5-37
Screw, Hex, .25-20 X 0.75, Sems, 2-15
Screw, Hex, .25-20 X 1.00, G5, 3-17
Screw, Hex, .25-20 X 1.75, G5, 2-73
Screw, Hex, .31-12 X 1.50, Fmg [Ab], 2-49, 3-25
Screw, Hex, .31-18 X 0.62, G5, 2-11
Screw, Hex, .31-18 X 0.75, G5, 3-11, 3-13
Screw, Hex, .31-18 X 2.25, G5, 2-15
Screw, Hex, .38-16 X 0.75, G5, 2-83
Screw, Hex, .38-16 X 0.75, Nl, 2-45
Screw, Hex, .38-16 X 1.25, Nl, 2-49, 3-25
Screw, Hex, .38-16 X 1.50, G5, 2-73
Screw, Hex, .50-13 X 2.50, G5, 2-15
Screw, Hex, .75-10 X 2.50, Fl, 2-45
Screw, Hex, .75-10 X 3.00, G5, 2-41
Screw, Hex, .75-10 X 5.00, G5, 2-41
Screw, Hex, 06-20 X 0.50, Fmg/Ab, Pl, 2-53
Screw, Hex, 08-32 X 0.38, Ss, 2-23
Screw, Hex, Case, Brg, Main [Ku], 5-18
Screw, Hex, Cshft [Ku], 5-34
Screw, Hex, M10 X 1.25 X 20, 8.8, 2-23, 2-33, 2-35
Screw, Hex, M10 X 1.25 X 35, 8.8, 2-23, 2-25
Screw, Hex, M10 X 1.50 X 100, 8.8, 2-55
Screw, Hex, M10 X 1.50 X 16, 8.8, 2-21
Screw, Hex, M10 X 1.50 X 20, 8.8, 2-69, 2-87, 3-20, 3-27
Screw, Hex, M10 X 1.50 X 25, 8.8, 2-41, 3-19, 3-46, 3-47
Screw, Hex, M10 X 1.50 X 25, Ss, 2-49, 2-55
Screw, Hex, M10 X 1.50 X 30, 8.8, 2-81
Screw, Hex, M10 X 1.50 X 30, Ss, 2-59, 2-61
Screw, Hex, M10 X 1.50 X 35, 9.8, Sems, 2-25, 2-29, 2-35, 2-53, 2-59, 2-61, 2-65, 3-21, 3-25, 3-51
Screw, Hex, M10 X 1.50 X 70, 8.8, 2-41
Screw, Hex, M12 X 1.75 X 120, 8.8, 2-55
Screw, Hex, M12 X 1.75 X 30, 8.8, 3-11, 3-13
Screw, Hex, M12 X 1.75 X 35, 8.8, 2-39, 3-70
Screw, Hex, M12 X 1.75 X 50, 8.8, 2-25
Screw, Hex, M12 X 1.75 X 60, 8.8, 2-23, 2-41
Screw, Hex, M16 X 2.00 X 20, 8.8, 2-45
Screw, Hex, M16 X 2.00 X 90, 8.8, 2-49, 3-25
Screw, Hex, M4 X 0.70 X 20, 8.8, 3-15
Screw, Hex, M4 X 0.70 X 20, Fmg, 2-17
Screw, Hex, M5 X 0.80 X 10, Fmg, 2-11, 2-13
Screw, Hex, M5 X 0.80 X 12, 8.8, 3-59
Screw, Hex, M5 X 0.80 X 16, 8.8, 2-67
Screw, Hex, M5 X 0.80 X 20, 8.8, 3-15
Screw, Hex, M5 X 1.0 X 16, Blk, 2-19, 2-39
Screw, Hex, M6 X 1.00 X 10, 8.8, 3-23
Screw, Hex, M6 X 1.00 X 12, 8.8, 2-15, 2-39
Screw, Hex, M6 X 1.00 X 12, Fmg, 2-5, 2-23, 2-25, 2-31, 2-55, 2-67, 2-69, 3-17
Screw, Hex, M6 X 1.00 X 16, 8.8, 2-23, 3-17
Screw, Hex, M6 X 1.00 X 16, Fmg, 2-29, 2-33, 2-59, 3-11, 3-13, 3-15
Screw, Hex, M6 X 1.00 X 16, Nl, Ss, 2-11, 2-13
Screw, Hex, M6 X 1.00 X 20, 8.8, 2-51, 2-53, 3-3, 3-5, 3-7, 3-9, 3-11, 3-13, 3-63

Screw, Hex, M6 X 1.00 X 20, 9.8, Sems, 2-53, 3-3, 3-5, 3-7, 3-9, 3-31, 3-35
Screw, Hex, M6 X 1.00 X 20, Fmg, 2-55, 2-67, 2-83, 3-31, 3-35
Screw, Hex, M6 X 1.00 X 20, Ss, 3-39
Screw, Hex, M6 X 1.00 X 25, 9.8 Sems, 2-21, 2-31, 2-45, 2-57, 2-67
Screw, Hex, M6 X 1.00 X 25, 9.8, Sems, 2-17, 2-63, 3-3, 3-5, 3-7, 3-9
Screw, Hex, M6 X 1.00 X 30, 9.8, Sems, 2-31, 3-51
Screw, Hex, M6 X 1.00 X 50, 8.8, 2-39, 2-85
Screw, Hex, M8 X 1.25 X 12, 8.8, 2-25
Screw, Hex, M8 X 1.25 X 16, 8.8, 2-11, 2-61, 2-63, 2-69, 2-71
Screw, Hex, M8 X 1.25 X 16, Nl, Ss, 2-59
Screw, Hex, M8 X 1.25 X 16, Ss, 2-15, 2-17, 2-67
Screw, Hex, M8 X 1.25 X 20, 8.8, 2-73
Screw, Hex, M8 X 1.25 X 20, Fmg, 2-29, 3-11, 3-13, 3-15, 3-17, 3-55, 3-57
Screw, Hex, M8 X 1.25 X 20, Ss, 2-5, 2-45, 3-31, 3-35
Screw, Hex, M8 X 1.25 X 20, Ss, Sems, 2-7, 2-9, 2-29, 2-39, 2-55, 3-7, 3-9, 3-67
Screw, Hex, M8 X 1.25 X 25, 8.8, 2-5, 2-33, 3-33, 3-37
Screw, Hex, M8 X 1.25 X 25, 9.8, Sems, 2-5, 2-9, 2-11, 2-13, 2-15, 2-17, 2-19, 2-29, 2-31, 2-37, 2-41, 2-63, 2-67, 2-69, 2-71, 3-3, 3-5, 3-7, 3-9, 3-15, 3-23, 3-31, 3-33, 3-35, 3-37, 3-51, 3-55, 3-57, 3-65
Screw, Hex, M8 X 1.25 X 25, Ss, 2-49, 3-25
Screw, Hex, M8 X 1.25 X 30, 8.8, 2-37, 2-47, 2-71, 3-23
Screw, Hex, M8 X 1.25 X 30, 9.8, Sems, 2-5, 2-19, 2-23, 2-31, 2-43, 2-51, 2-59, 2-67, 2-83, 3-11, 3-13, 3-33, 3-37, 3-67
Screw, Hex, M8 X 1.25 X 35, 8.8, 2-11, 2-13, 3-23
Screw, Hex, M8 X 1.25 X 35, 9.8, Sems, 2-27, 2-37, 2-39, 2-55, 2-59, 2-61, 2-69, 3-17, 3-31
Screw, Hex, M8 X 1.25 X 40, 8.8, 2-31, 3-19
Screw, Hex, M8 X 1.25 X 40, 8.8, Fl, 2-65
Screw, Hex, M8 X 1.25 X 40, Ss, 2-67
Screw, Hex, M8 X 1.25 X 45, 8.8, 2-43
Screw, Hex, M8 X 1.25 X 60, 8.8, 2-47, 2-55
Screw, Motor, Hyd [En], 4-5, 4-7
Screw, Pan, 5-12
Screw, Pan, 06- X 0.38, F/ Plstc, 2-71
Screw, Pan, 12-16 X 0.50, F/ Plstc, 2-11, 2-13, 2-71, 3-39, 3-40
Screw, Pan, Phl, .31-18 X 1.50, G2, 2-13
Screw, Pan, Phl, 06-32 X 1.00, G1, 2-51
Screw, Pan, Phl, 08-16 X 1.00, F/ Plstc, 2-59
Screw, Pan, Phl, 08-32 X 0.38, G1, 2-51
Screw, Pan, Phl, 10-14 X 0.75, F/ Plstc, 2-69
Screw, Pan, Phl, 10-16 X .75, Blk, 2-19
Screw, Pan, Phl, 10-16 X 0.75, Fmg/Ab, 3-40
Screw, Pan, Phl, 10-32 X 0.50, G2, Blk, 2-19
Screw, Pan, Phl, 12-16 X 0.50, F/ Plstc, 3-49
Screw, Pan, Phl, M3 X 0.5 X 25, Blk, 2-19
Screw, Pan, Phl, M3 X 0.50 X 10, 4.8, 3-7, 3-9
Screw, Pan, Phl, M3 X 0.50 X 25, Blk, 2-57
Screw, Pan, Phl, M4 X 0.70 X 10, Blk, 3-59
Screw, Pan, Phl, M4 X 0.70 X 10, Ss, 2-71, 3-65
Screw, Pan, Phl, M4 X 0.70 X 16, 4.8, 2-67, 3-3, 3-5, 3-7, 3-9, 3-15
Screw, Pan, Phl, M4 X 0.70 X 16, Ss, 2-71
Screw, Pan, Phl, M4 X 0.70 X 30, 4.8, 3-51
Screw, Pan, Phl, M5 X 0.80 X 12, Ss, 2-59, 2-61, 2-63
Screw, Pan, Phl, M5 X 0.80 X 16, 4.8, 3-3, 3-5, 3-7, 3-9
Screw, Pan, Phl, M5 X 0.80 X 25, 4.8, 3-17
Screw, Pan, Phl, M6 X 1.0 X 40, Blk, 3-23
Screw, Pan, Phl, M6 X 1.00 X 10, Ss, 2-55
Screw, Pan, Phl, M6 X 1.00 X 40, Ss, 2-19
Screw, Pan, Phl, M6 X 1.00 X 60, Zn, 3-53
Screw, Pan, Phl, M8 X 1.25 X 25, Ss, 2-61
Screw, Set, 5-19, 5-21
Screw, Set, Soc, .25-20 X 0.75, Al, 2-53
Screw, Set, Soc, .31-18 X 0.50, Al, 2-53
Screw, Set, Soc, 10-24 X 0.38, Al, 2-71
Screw, Soc, .31-24 X 0.75, Al, 2-73
Screw, Soc, M10 X 1.5 X 20, 12.9, 2-21
Screw, Soc, M8 X 1.25 X 30, 12.9, 2-25
Screw, Valve, Steering, 4-13
Seal, 1-1, 2-5, 2-7, 2-9, 2-67
Seal Assy [Ku], 5-33
Seal Assy, Pre-Filter, 2-69
Seal Kit [Cl], 4-5, 4-7
Seal Kit, Cartridge, 4-14, 4-15, 4-16, 4-17
Seal Kit, Cntrl, Steering [Cl], 4-13
Seal Kit, Cyl, Hyd, 2-57
Seal Kit, Hyd, Motor, 4-9
Seal Kit, Motor [Cl], 2-45, 2-49, 3-25
Seal Kit, Motor, Hyd, Gear, 4-8
Seal Kit, Pump, Hyd, 4-3
Seal Kit, Valve, Hyd, 4-14, 4-15
Seal Kit, Valve, Hyd [En], 4-11
Seal, .19, .25w 39.2l, Adh, 3-15
Seal, Afmkt, Bulb, 90, 1.33 01ft, 2-11, 2-13
Seal, Afmkt, Bulb, Str, .75d F/07ga 08ft, 3-15
Seal, Afmkt, Bulb, Str, 0.50h .50w 1ft, 3-65
Seal, Afmkt, Bulb, Str, 0.50h .50w 3ft, 3-65
Seal, Afmkt, Bulb, Str, 0.58D 08Ft, 3-17
Seal, Bulb, 90, 0.50d .06-.09grip 022.5l, 2-11, 2-13
Seal, Bulb, Str, 0.50d .13grip 009.4l, 2-7
Seal, Cleanout Door, 2-71
Seal, Cover, 2-55
Seal, Door, Access, 2-59, 2-61
Seal, Door, Dump, Side, 1-1
Seal, Dust, 2-9
Seal, Firewall, 2-5
Seal, Foam, 2-69
Seal, Grease Cav, 2-41
Seal, Heat, 5-26
Seal, Hppr, .06 12.5w 36.6l Neo, 1-1, 2-5
Seal, Inlet, Vacuum, 1-1, 2-51
Seal, Lip [76038ddur], 3-15
Seal, Oil [Ku], 5-18
Seal, Org, 5-4, 5-12, 5-31
Seal, Org [Ku], 5-25
Seal, Org, .069 X 03.06id, 2-81
Seal, Rbr, .13 6.34w 36.3l, 12/.28h, Red, 1-1, 2-67
Seal, Rbr, 0.06, Tube, Vacuum Wand, 3-39
Seal, Rbr, Clsd, 0.13, Door, Dump, Side, 2-67
Seal, Rbr, Clsd, 0.38, Instmt Panl, 2-19
Seal, Rbr, Damper, 0.06th, 04.1d, 2-51
Seal, Rbr, Open, 0.38, 1.25w 25.5l, 2-7
Seal, Top, Lh, Sbdc, 3-31, 3-33, 3-35, 3-37
Seal, Top, Sbdc, 3-31, 3-33, 3-35, 3-37
Seal, Ure, 0.50, 0.75w 04.0l Adh, 2-53
Seal, Valve, Stem [Ku], 5-9
Seal,Oil, 5-7
Seat Kit, Dlx, Ci [S20], 3-19
Seat Kit, Replacement [S20], 2-11
Seat, spring lower, 5-15
Seat, spring upper, 5-15
Seat, Std [Milsco], 2-13
Seat, Suspension [Grammer Gs12], 3-19
Seatbelt Kit, Ci [6400], 3-20
Seatbelt, 60.0l, 3-19, 3-20
Send-Unit, 90 Ohm, 2-31
Send-Unit, Fltr, Hyd, 2-83
Send-Unit, Fuel, 90 Ohm, 2-31
Sensor, Level, Liq, 14vdc 01a .62-11, 3-51
Sensor, Thermal, 140deg, No, Spst, 2-71
Shaft Assy, Brg, 2-53
Shaft Assy,Gov, 5-21
Shaft Wldt, Brush, 2-39
Shaft, Arm, Rocker [Ku], 5-9
Shaft, Drive [Bn], 4-9
Shaft, Drive, Pump, Hyd [Cessna], 4-3
Shaft, Gear, 5-19
Shaft, Gov, 5-21
Shaft, Govnr, Weight [Ku], 5-21

Shaft, Idler, Plug, Brush, 2-45
Shaft, Impeller, 2-53
Shaft, Lever, 5-24, 5-25
Shaft, Output, Motor, Hyd [En], 4-5, 4-7
Sheave, Drive, Dsl [S20], 2-23
Sheave, 01grv, 02.6pd 0.63b [3v], 2-53
Sheave, Cshft [Ku], 5-34
Sheave, Fan [Ku], 5-34
Shield, Battery, 2-25
Shield, Breather, 5-12
Shield, Fltr, Oil, 2-23
Shim, 5-15
Shim Kit, 4-3
Shim, Injection, 0.175mm [Ku], 5-13
Shim, Injection, 0.20mm [Ku], 5-13
Shim, Injection, 0.25mm [Ku], 5-13
Shim, Pump, Inj, .3 [Ku], 5-13
Shim, Pump, Injection, .35 [Ku], 5-13
Shock Absorber, 2.3 Strk, 2-73
Shoe, Brake, 180 X 30mm, 2-39
Shroud, Fan, Radiator, W/ Label [S20] Jp, 2-29
Shroud, Fan, Radiator, W/ Label [S20] Na, 2-29
Shroud, Rear [S20], 2-11, 2-13
Shroud, Rear, Trimmed, 2-11
Side Metl1(04), 5-11
Skirt, Brush, Side, Sbdc, 3-31, 3-35
Skirt, Brush, Side, Sbdc [W/O Lhsb], 3-31
Skirt, Front, Dual Sbdc, Rpd [S20], 3-37
Skirt, Front, Rh, Sbdc, Rpd [S20], 3-33, 3-37
Skirt, Front, Single Sbdc, Rpd [S20], 3-33
Skirt, Hppr, Lip, 2-61
Skirt, Neo, .12 2ply, Dust-Cntrl, 1-1, 2-59
Skirt, Neo, .12, 05.20w 36.10l, 06/ Sl, 1-1, 2-59
Skirt, Neo, .12, 08.00W 29.50L, 06/ SL, 2-61
Skirt, Neo, .12, 12.26w 14.50l, 07/ Sl, 1-1, 2-5
Skirt, Sbdc, Sba, Lh, 3-35
Sleeve, 0.32b 0.50d 0.3l, 2cham, Ss, 2-47, 2-49, 3-23, 3-25
Sleeve, control, 5-15
Sleeve, Dashpo, Pump, Hyd, Gear, 4-8
Sleeve, Nyl, 1.63id 25.0l, 2-49, 2-83, 3-25
Sleeve, Nyl, 1.81id 20.0l, 2-41
Sleeve, P/M, 0.25b 0.44d 0.2l, Pl, 2-51
Sleeve, P/M, 0.32b 0.50d 0.3l [430ss], 2-11, 2-13, 3-49
Sleeve, P/M, 0.32b 0.50d 0.5l [430ss], 2-47, 3-23
Sleeve, P/M, 0.34b 0.63d 0.4l, Ss / Oil, 2-13, 2-37, 2-43
Sleeve, P/M, 1.25b 1.75d 0.7l [430ss], 2-55
Sleeve, Vyl, Flex, .39id 03.0l, 3-3, 3-5, 3-7, 3-9
Solenoid Assy, Pull, 12vdc, 2-51
Solenoid Kit, 12vdc, Replmt [Thrmsentry], 2-51
Solenoid, #10, 12vdc, 4-14, 4-15
Solenoid, #8, 12vdc, 4-15
Solenoid, 12vdc, Hyd [Sz10], 4-16, 4-17
Solenoid, Cntrl, 4-14, 4-15
Solenoid, Starter [Ku], 5-31
Solenoid, Stop, Eng, Dsl, 12vdc [Ku], 5-23
Spacer, 2-37
Spacer [Ku], 5-27
Spacer, 0.56b 0.88d 1.82l, Pl, 2-67
Spacer, Fltr, 2-69, 2-71
Spacer, Valve, Hyd, 4-11
Spd.Cntl.Lever, 5-25
Spindle, Adjustment, 2-11, 2-13
Spotlight, Blue, Ci [S20], 3-67
Spring, 4-8, 5-7, 5-31
Spring [En], 4-11
Spring Assy, Centering10/15 Lb Preload], 2-73
Spring Kit, Scu [Cl], 4-13
Spring, deliv valve, 5-15
Spring, Arm, 5-9
Spring, Brush, 5-31
Spring, Cmpr, 0.72od .06wir 02.3l, 2-21
Spring, Cmpr, Rocker [Ku], 5-9
Spring, Dsl, 1.00od 0.50id 1.25l, 2-49, 3-25
Spring, Dsl, 1.25od 0.62id 1.80l, 2-49, 3-25
Spring, Extn, 0.38od 0.05wir 01.0l, 3-3, 3-5, 3-7, 3-9
Spring, Extn, 0.38od 0.05wir 02.5l, 2-85
Spring, Extn, 0.75od 0.11wir 04.5l, 2-49, 3-25
Spring, Extn, 0.96od 0.05wir 01.4l, 2-51
Spring, Flat, .06, 0.75w X 01.8l, 2/.28h, 2-15
Spring, Pump, Hyd, Gear, 4-8
Spring, Return, 5-25
Spring, Tens, 2-67
Spring, Tors, 0.81id .12wir 08.0coil, 2-15
Spring, Tors, 1.03id .11wir 03.0coil, 2-47
Spring, Valve, 5-9
Spring, Valve, Hyd, 4-11
Spring, Valve, Hyd [En], 4-11
Spring, Wir, 0.08d, Parking Brake, 2-39
Spring, Wir, 0.25d, Brake Return, 2-39
Spring,plunger, 5-15
Spring,Start, 5-24
Starter Assy (See Starter Breakdown), 5-29
Stay,Dynamo, 5-34
Steer-Control, Hyd05, 06.1 914, 4-13
Steer-Control, Hyd05, 06.1 914 (See Breakdowns), 2-21
Stopper, 5-19, 5-21
Strainer, Hyd, 010gpm 100mesh, 1-1, 2-83
Strainrelief, 2-69
Strap Wldt, Tank, 2-31, 2-83
Strap Wldt, Tank, Hyd, 2-83
Strap, Rbr, 2-71, 3-65
Strap, Rbr, Tie-Down, 19.0l, 2/ Hook, 2-35, 3-53
Strap, Static, W/Grommet, .19 1.1w 25.0l, 2-5
Strip Wldt, Seal, Door, 2-67
Strip, Rbr, 0.06 02.50w 02.5l, 2-25
Strip, Rbr, Short, 3-65
Strip, Retainer, 2-67
Strip, Retainer, Dump Door, 2-67
Strip, Retainer, Flap, 2-5
Strip, Retainer, Front, Sbdc, 3-33, 3-37
Strip, Retainer, Hppr Lip, 2-59
Strip, Retainer, Seal, 2-9
Strip, Retainer, Skirt, Sbdc, 3-33, 3-37
Stud, 5-9, 5-36
Stud [Ku], 5-13
Stud [Ku], 5-7, 5-25
Stud, M8 X 1.25 [55.0], 2-71
Stud, Spcl, 2-45
Stud, Wheel .50-20 X 1.50, 3-44, 3-45, 3-46, 3-47
Stud, Wheel, .50-20 X 1.50l, 0.370th, 2-41
Support Wldt, Rh, Sbdc, 3-31, 3-35
Support Wldt, Lh, Sbdc, 3-35
Support, Hppr, Lip, Back, 2-65
Support, Hppr, Lip, Front, 2-65
Support, Hppr, Lip, Side, 2-65
Switch, Ignition [Ku], 2-19
Switch, Press, Adj [4-16 In Wtr], 2-67
Switch, Pull, No, 3-3, 3-5, 3-7, 3-9
Switch, Push, Spst, No, 2-51
Switch, Rocker, 3 Position, 2-19
Switch, Rocker, Spst, Round, 3-59
Switch, Seat, 3-19
Switch, Seat, No [Delta 6440-04], 2-11, 2-13
Switch, Snap, 15a No, 2-39, 3-3, 3-5, 3-7, 3-9, 3-59
Switch, Snap, 15a No, Rlr, 2-67
Switch, Snap, 25a Spdt, 2-19
Switch, Temp, Sealed, Nc, 2-71
Switch, Thermostat, Water, 2-23
Switch, Wobble, Spdt, 250vac, 15a, 2-57

T

Taillight, Led, 13.5v, 5.3 X 3.4, 2-5
Tank, Detgt, Trimmed [S20], 3-51
Tank, Fuel, 06.9gal, 10.53w 18.6hi 10.0l, 2-31
Tank, Fuel, 07.3gal, 10.53w 18.6hi 11.0l, 2-31
Tape, Hook, 1.0w [Velcro], 3-15, 3-17
Tappet [Ku], 5-19
Terminal, Qf, .25, 5-34
Thermostat, 160deg, 1.7d [Ku], 5-32
Thrust Bearing .4Mm, 5-11
Thrust Bearing .2Mm, 5-11
Thrustwasher, 5-21
Tie, Cable, 11.3l, 2.75d Max, 3-67
Tie, Cable, Nyl, 07.3l .19w 1.8 Max D, 2-29, 2-31, 2-41, 2-49, 2-59, 2-61, 2-73, 3-25, 3-49

Tie, Cable, Nyl, 11.4l .19w 3.0 Max D, 2-19
Tie, Cable, Nyl, 14.5l .30w 4.0 Max D, 2-5
Timer, 12vdc, 10a [Left Hand Side Brush], 3-23
Timer, 12vdc, 10a, 2s [Ce Seat Switch], 2-19
Timer, Glow Plug [Ku], 5-28
Timer, Glowplug [Ku], 2-23
Tire, 3-46
Tire and Wheel Assembly 16X6 RS Radial, 3-43
Tire and Wheel Assembly, 16x6 RS Radial, 3-47
Tire and Wheel Assembly, Non-Marking Solid, 3-41
Tire and Wheel Assy 4.00-8 Solid, 3-42
Tire Assy, Idler, 16.0 X 3.5, Rubber, 2-39
Tire Assy, Pneu, 150/75-08 4.5bc 5bolt, 2-41
Tire Assy, Solid, 04.0 X 3.8 4.5bc 5bolt, 3-44, 3-45
Tire, 150/75R8 Pneumatic, 3-43, 3-47
Tire, 4.00 X 8-3.75 Sol. Non-Mark, 3-44
Tire, 4.00X8-3.75 Sol. Non-Mark, 3-41
Tire, 4.00X8-3.75 Solid, 3-42
Tire, Pneu, 16x6.0x08 [With Tube & Flap], 2-41
Tire, Pneu, 16x6.0x08, 10ply [1c12], 2-41
Tire, Solid, 4.0 X 8.0 X 3.8, 3-45
Tire, Tube & Flap Assy, 3-43, 3-46, 3-47
Tire/wheel Assy, 16x6-8 10pr, 3-46
Track, Locking, 12.5l, No Stud W/Handle, 2-13
Track, N-Lkg, Seat, 12.5l, No Stud, 2-13
Track, Slide, Seat Adj, 12.5l, 2-11
Track, Slide, Seat Adj, 12.5l, W/ Latch, 2-11
Tray Wldt, Dust [Cyclone], 2-69
Tray, Dust, Shakr, 2-69
Tray, Mold, 2-69
Tread, Non-Skid, 01.4w 12.0l, 2-19
Tread, Non-Skid, 02.2w 15.5l, 2-37
Tread, Non-Skid, 06.5w 20.6l, 2-37
Tube Wldt, Exhaust, 1.6d, 2 Hole Flng, 2-33
Tube Wldt, Torque, 2-45
Tube, 0.26id 0.38od 00.3l, Stl, Pl, 2-73
Tube, 0.33id 0.51od 00.8l, Stl, Pl, 3-23
Tube, 0.34id 0.62od 00.2l, Stl, 2-39
Tube, 0.38id 0.75od 00.9l, Stl, 2-67
Tube, 0.38id 0.81od 00.4l, Stl, 2-53
Tube, 0.42id 0.62od 01.0l, Stl, Pl, 2-47
Tube, Breather, 5-12
Tube, Drain, Starter, 5-31
Tube, Intake, 2.0d 02.0l, Flng, 2-27
Tube, Pickup, Oil [Sump, Ku], 5-4
Tube, Tire-Inner 16X6-8, 3-43, 3-46, 3-47
Tube, Transition, Valve, Ic, 2-51

V

Valve Assy, Relief, 4-13
Valve Seat, 5-7
Valve, Breather, Complt, 5-12
Valve, Check, 0005psi Bm06/Bm06, 3-55, 3-57
Valve, delivery, 5-15
Valve, Drive, Pump, Hyd, Gear, 4-8
Valve, Exhaust, 5-9
Valve, Hyd, Mnl, 2spool 0100psi 10gpm, 4-11
Valve, Hyd, Mnl, 2spool 0100psi 10gpm (See Breakdowns), 2-85
Valve, Hyd, Solenoid, 12vdc, 3-27, 4-14, 4-15
Valve, Hyd, Solenoid, 12vdc (See Breakdowns), 2-87
Valve, Hyd, Solenoid, 12vdc [1045853], 4-17
Valve, Hyd, Solenoid, 12vdc [1046687], 4-16
Valve, Pump, Gear Hyd [Char Lynn], 4-8
Valve, Relief, 4-14, 4-15
Valve, Relief, 2000psi, 4-3
Valve, Relief, 2500psi, 4-3
Valve, Shutoff, Bm04/Bm04, Pvc, 3-51
Valve, Stem, Hyd, 4-17
Valve, Stem, No, 4-16, 4-17
Video, Oprtr, Dvd [S20 En, Es, Fr], 3-71

W

Wand Kit, Vacuum, Ci [S20], 3-39
Wand, Vacuum, W/ Label, JP [S20], 3-39
Wand, Vacuum, W/ Label, Na [S20], 3-39
Washer, 5-7, 5-9
Washer Flat,0.50,Sae, 2-15, 2-23, 2-39, 2-49, 2-67, 3-11, 3-13, 3-25
Washer, Adjusting [Ku], 5-27
Washer, Flat [Ku], 5-9
Washer, Flat, 0.20b 0.50d .06, Alm, Blnd, 2-67
Washer, Flat, 0.25, Fendr, 2-67, 3-17
Washer, Flat, 0.25, Sae, 2-51, 3-3, 3-5, 3-7, 3-9, 3-49, 3-53, 3-63
Washer, Flat, 0.25, Std, 2-11, 2-13, 2-29, 2-33, 2-57, 2-59, 2-61, 2-67, 2-73, 2-83, 3-19, 3-23, 3-31, 3-35, 3-39
Washer, Flat, 0.25b 0.56d .05, Pl, 10, 3-11, 3-13, 3-51, 3-59
Washer, Flat, 0.25b 0.88d .06, Neo, 2-73
Washer, Flat, 0.25b 1.12d .12, Ss, 3-53
Washer, Flat, 0.27b 0.69d .05, Ss, 2-19, 3-23
Washer, Flat, 0.31, Fendr, 2-5, 2-55, 2-59, 2-69, 3-17, 3-31, 3-33, 3-35, 3-37
Washer, Flat, 0.31, Sae, 2-7, 2-9, 2-25, 2-73
Washer, Flat, 0.31, Std, 2-5, 2-11, 2-13, 2-15, 2-17, 2-37, 2-39, 2-43, 2-45, 2-47, 2-59, 2-63, 2-65, 2-67, 2-69, 2-71, 2-85, 3-3, 3-5, 3-7, 3-9, 3-11, 3-13, 3-23, 3-51, 3-67
Washer, Flat, 0.31b 0.88d .12, Rbr, 2-85
Washer, Flat, 0.32b 1.00d .12, Ss, 2-71
Washer, Flat, 0.34b 0.69d .06, Nyl, 2-15
Washer, Flat, 0.38, Sae, 2-23, 2-25, 2-33, 2-35, 2-41, 2-73, 2-81, 2-83, 3-17
Washer, Flat, 0.38, Std, 2-23, 2-47, 2-49, 2-55, 2-59, 2-61, 2-67, 2-69, 2-87, 3-25, 3-27
Washer, Flat, 0.38b 0.88d .08, Ss, 2-49, 3-25
Washer, Flat, 0.40b 1.12d .12, Ss, 2-59, 2-61, 2-67
Washer, Flat, 0.44, Std, 2-47
Washer, Flat, 0.53b 1.06d .10, Stl, Pl, 2-21, 3-70
Washer, Flat, 0.53b 1.75d .12, Stl, Pl, 2-23, 2-25, 2-45
Washer, Flat, 0.62, Sae, 2-49, 3-25
Washer, Flat, 0.75, Sae, 2-41
Washer, Flat, 0.76b 1.50d .06, Ss, 2-39
Washer, Flat, 08, 2-51
Washer, Flat, 1.02b 1.75d .12, Stl, 2-57
Washer, Flat, 1.26b 1.88d .13, Stl, 2-41
Washer, Flat, 1.91b 3.00d .16, Felt, 2-41
Washer, Flat, 10, 2-31, 2-39, 2-59, 2-61, 2-69, 3-3, 3-5, 3-7, 3-9, 3-15
Washer, Flat, Belleville, .31, 3-17
Washer, Flat, Belleville, .50, 2-55
Washer, Flat, M21.0b X 37d X 3, 2-39
Washer, Flat, Pump, Hyd, 4-3
Washer, Lock, Int-Ext, 0.25, 2-69
Washer, Lock, Int-Ext, 0.31, 2-5
Washer, Lock, Int-Ext, 0.38, 2-35
Washer, Lock, Int-Ext, 0.50, 3-67
Washer, Lock, Int, 0.31, 3-11, 3-13
Washer, Lock, Int, 04, 2-57, 3-7, 3-9
Washer, Lock, Int, 10, Ss, 2-71
Washer, Plain, 5-9, 5-25
Washer, Plain [Ku], 5-27
Washer, Pump, Hyd [En], 4-3
Washer, Sealing, M8, 2-43
Washer, Split Loc [Ku], 5-13
Washer, Spring [Ku], 5-31, 5-34
Washer, Thrust, 0.53b 1.00d 0.03w[Fbrgl], 2-49, 3-25
Washer, Thrust, 0.61b 1.25d .06, Fgl, 2-49, 3-25
Washer, Valve, Hyd, 4-11
Washer, Valve, Hyd [En], 4-11
Washer, Wavy, 0.53b 0.81d .09, 2-45
Washer,Plain, 5-34
Weight, Eccentric, Pntd, 2-71
Wheel and Tire Kit, Bias Front, 3-46
Wheel and Tire Kit, Non-Mark Solid, Front, 3-44
Wheel and Tire Kit, Radial Front, 3-47
Wheel and Tire Kit, Soft Ride, Front, 3-45

Wheel, Steering, 14.0D 0.81B 36Tooth, 2-21
Wire, Solenoid, Starter [Ku], 5-31

Y

Yoke, Starter [Ku], 5-31