HD 6/15 M ST

The compact HD 6/15 M St motor/pump unit for stationary use, with AC motor, wall mount, 600 litres per hour flow rate and automatic pressure relief.

Order no.	1.150-950.0

Technical data

EAN code		4054278233970
Number of current phases	Ph	1
Voltage	V	230
Frequency	Hz	50
Flow rate	l/h	560
Inlet temperature	°C	60
Working pressure	bar / MPa	150 / 15
Max. pressure	bar / MPa	225 / 22.5
Connected load	kW	3.1
Power cable	m	5
Water inlet		3/4"
Colour		anthracite
Weight (with accessories)	kg	20.5
Weight incl. packaging	kg	22.9
Dimensions (L × W × H)	mm	290 × 300 × 565

Equipment

Pressure cut-off

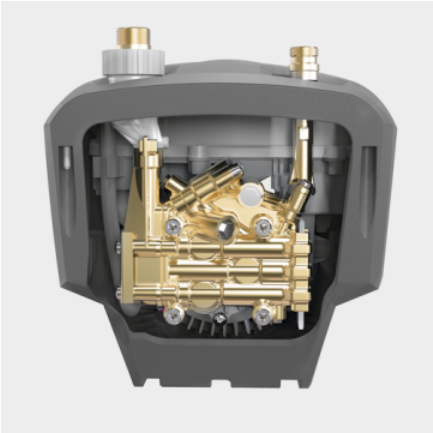

High-quality equipment

- Automatic pressure relief for protecting the components extends their life.
- Powerful, 2-pole, air-cooled electric motor.
- High-quality brass cylinder head

Flexible operation

- For vertical and horizontal operation.

Prepared for stationary operation

- Simple and robust 3-point attachment for wall mounting on the rear of unit.
- Space-saving, compact design.
- Integrated storage possibilities reduce the set-up times.

HD 6/15 M St, 1.150-950.0, 2026-09-18

ACCESSORIES FOR HD 6/15 M ST
1.150-950.0

1

2

3

4

5

6

7

8

9

10

11

12

13

14

		Order no.	Description	
POWER GENERATOR				
PGG 6/1	1	1.042-208.0	With a power rating of 5 kW, the petrol-operated synchronous generator PGG 6/1 impresses with up to 10 hours of independent power supply in many commercial and municipal applications.	☐
TRIGGER GUNS				
Spray guns				
Pistol TR 155°C with package	2	4.119-002.0	Classic spray gun with valve. Also suitable for Kärcher hot water high-pressure cleaners.	☐
EASY!Force Advanced	3	4.118-005.0	Effortless, not energy-sapping: the EASY!Force high-pressure gun uses the recoil force of the high-pressure jet to reduce the holding force for the operator to zero.	☐
EASY!Force conversion kit 1 – from high-pressure hose	4	4.111-050.0	For retrofitting Kärcher high-pressure cleaners with existing high-pressure hose: EASY!Force conversion kit 1 with EASY!Force high-pressure gun, spray lance and all adapters through to the nozzle.	☐
EASY!Force conversion kit 2 – from machine	5	4.111-051.0	Developed for retrofitting existing high-pressure cleaners from Kärcher: EASY!Force conversion kit 2 with EASY!Force high-pressure gun, spray lance, high-pressure hose and necessary adapters.	☐
EASY!Force conversion kit 3 – high-pressure gun	6	4.111-052.0	Compatible with existing high-pressure hose and spray lance: EASY!Force conversion kit 3, incl. EASY!Force trigger gun and all necessary adapters for upgrading your high-pressure cleaner.	☐
SPRAY LANCES				
Rotating spray lances				
Jet pipe with transport packaging, 840 mm	7	4.119-003.0	Rotating Classic spray lance with handle bowls in a stainless steel design. Also suitable for Kärcher hot water high-pressure cleaners.	☐
Spray lance Classic EASY!Lock, 1050 mm	8	4.119-008.0	High-pressure spray lance with EASY!Lock screw connections from the Classic series from Kärcher. Also suitable for Kärcher hot water high-pressure cleaners.	☐
Jet pipe TR 600mm with package, 600 mm	9	4.119-009.0	Rotating Classic spray lance with handle bowls in a stainless steel design. Also suitable for Kärcher hot water high-pressure cleaners.	☐
Jet pipe Classic TR 100mm, 100 mm	10	4.119-013.0		☐
Jet pipe Classic TR 200mm, 200 mm	11	4.119-014.0		☐
Jet pipe Classic TR 400mm, 400 mm	12	4.119-015.0		☐
LED nozzle light	13	2.680-002.0	Bright, lightweight LED work light for direct mounting on spray lance of EASY!Force high-pressure gun. Better view in unfavourable lighting conditions for up to 5 working hours.	☐
Spray lance, 250 mm, rotatable	14	4.112-027.0	Spray lance, 250 mm, rotatable, ergonomic	☐

☐ Available accessories.

ACCESSORIES FOR HD 6/15 M ST
1.150-950.0

15

16

17

18

19

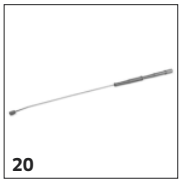
20

21

22

23

24

25

26

27

28

		Order no.	Description	
SPRAY LANCES				
Rotating spray lances				
Spray lance, 400 mm, rotatable	15	4.112-024.0	Spray lance, 400 mm, rotatable, ergonomic	☐
Spray lance, 600 mm, rotatable	16	4.112-007.0	600 mm stainless steel lance (manual coupling) with ergonomic handle for ease of use and protection. Rotatable 360° under pressure.	☐
Spray lance, 840 mm, rotatable	17	4.112-006.0	850 mm stainless steel lance (manual coupling) with ergonomic handle for ease of use and protection. Rotatable 360° under pressure.	☐
Spray lance, 1050 mm, rotatable	18	4.112-000.0	1050 mm stainless steel lance (manual coupling) with ergonomic handle for ease of use and protection. Rotatable 360° under pressure.	☐
Spray lance, 1550 mm, rotatable	19	4.112-018.0	1550 mm stainless steel lance (manual coupling) with ergonomic handle for ease of use and protection. Rotatable 360° under pressure.	☐
Spray lance, 2050 mm, rotatable	20	4.112-021.0	2050 mm stainless steel lance (manual coupling) with ergonomic handle for ease of use and protection. Rotatable 360° under pressure.	☐
Spray lance extender, 1000 mm	21	4.112-048.0	Spray lance extension with EASY!Lock connection. Length 1000 mm.	☐
Double lance				
Double lance, 960 mm	22	2.112-016.0	960 mm double lance for variable pressure adjustment on handle at full water flow rate. Suitable for agricultural use (e.g. stable cleaning).	☐
Angular spray lance				
Spray lance for toilets and rain gutters	23	4.112-029.0	Stainless steel lance WC and gutter with nozzle insert. Specially shaped for effective and hygienic cleaning of gutters and toilets.	☐
Flexible spray lance				
Flexible lance, 1050 mm	24	4.112-035.0	1050 mm flexible lance with variable bend from 20° to 140°, ideal for cleaning difficult to reach areas, e.g. gutters.	☐
High pressure articulated joint	25	4.112-057.0	For hard-to-reach areas: High-pressure articulated joint with infinite angle adjustment up to 120°. Simply attach directly to the spray lance of the pressure washer.	☐
Gutter cleaner				
Gutter cleaning lance	26	2.112-015.0	The lance is suited for cleaning of gutter systems. Because of the shape of the lance and the special nozzle the gutter can be cleaned without removing the cover plates.	☐
Undercarriage spray lance				
Underbody lance	27	4.112-032.0	Stainless steel lance for effective and easy underbody and wheel arch cleaning. Without high-pressure nozzle.	☐
Additional handle				
Additional handle for EASY!Lock spray lances	28	4.321-380.0	Comfortable in every situation – the additional handle is easy to attach to the spray lance of our new EASY!Lock generation and makes work easier by allowing you to adjust your posture to suit the particular task. Regularly changing your posture relieves the strain on your body, making work more relaxed. Thanks to the 360°-rotatable spray lance, the additional handle can simply be fully rotated whilst working for greater flexibility.	☐

☐ Available accessories.

KÄRCHER

ACCESSORIES FOR HD 6/15 M ST
1.150-950.0

29

30

31

32

33

34–37

38

39

40

42

		Order no.	Description	
ROTARY NOZZLES (DIRT BLASTERS)				
Dirt Blaster, small				
Dirt blaster, small, 035	29	4.114-019.0	The new performance dirt blaster (nozzle size 035) with rotating point jet makes a big difference: up to 50% higher cleaning and area performance than its predecessor.	☐
Dirt blaster, large				
Dirt blaster, large, 035	30	4.114-040.0	The dirt blaster with rotating pencil jet offers 10 times better cleaning performance. Ceramic nozzle and bearing ring for a long service life. Further data: Max. 300 bar, 30 MPa, 85°C.	☐
Classic rotary nozzle				
Rotor nozzle TR 035	31	4.119-022.0	The powerful rotating point jet of the Classic rotary nozzle from Kärcher ensures the best possible cleaning results and is suitable for water temperatures of up to 60 °C.	☐
MULTIPLE-JET NOZZLES				
Triple nozzles				
Triple nozzle, 033	32	4.117-028.0	Triple nozzle with manual nozzle changeover. Convenient spray adjustment. For machines with an injector, the low-pressure flat stream is useful for cleaning agent suction and application.	☐
Angled vario nozzle 0-90°				
Angled Vario nozzle, 050	33	4.113-007.0	Variable angle nozzle for spray angle adjustment from 0° to 90°. For easy adjustment to all kinds of soiling and surfaces.	☐
KÄRCHER POWER NOZZLE				
HP nozzle spray angle 0°				
Power nozzle 0°, 040	34	2.113-001.0	High-pressure nozzle with powerful jet for extremely stubborn dirt.	☐
Power nozzle spray angle 15°				
Power nozzle 15°, 033	35	2.113-002.0	Flat jet nozzle for stubborn dirt.	☐
Power nozzle spray angle 25°				
Power nozzle , 033	36	2.113-063.0	Fan jet nozzle for large-area coverage and stubborn dirt and stains.	☐
Power nozzle spray angle 40°				
Power nozzle 40°, 040	37	2.113-003.0	Power nozzle with a 40° spray angle and fan jet, suitable for large areas and sensitive surfaces.	☐
ECO!BOOSTER				
eco!Booster TR 033	38	2.113-085.0	eco!Booster with 50% higher area performance than the Kärcher power nozzle for cold and hot water high-pressure cleaners (nozzle size 033); ideal for delicate surfaces.	☐
QUICK CONNECT				
Quick coupling	39	2.115-000.0	For fast changes between different spray lances/accessories. Perfect for Kärcher spray unit, suitable for trigger gun/spray lance interface. With M 22 × 1.5 internal thread.	☐
Male coupling	40	2.115-001.0	Hardened stainless steel male coupling for quick coupling 2.115-000. With M 22 × 1.5 external thread.	☐
DRUM AND TANK CLEANING				
Add-on kit mud sucker	41	2.641-798.0	For connection to the high-pressure hose of Kärcher high-pressure cleaners: Powerful sludge suction cleaner for the retrofitting of high-pressure cleaners to dirt pumps.	☐
OTHER HP ACCESSORIES				
Coin remote control	42	2.644-029.0	Coin remote control with electronic coin acceptor for connecting a high-pressure cleaner as a pre-wash device. Please have the power outlet and cable provided on site.	☐

☐ Available accessories.

ACCESSORIES FOR HD 6/15 M ST
1.150-950.0

43

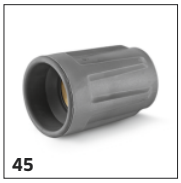
45

46, 54

47

48, 50–53

49

55

56–57, 59

		Order no.	Description	
OTHER HP ACCESSORIES				
Jet gun	43	2.869-067.0	Spray lance with immediate shut-off and infinitely variable pressure and water volume control.	☐
SEALS FOR TRAPEZOIDAL THREAD				
Gasket set with 9x O-rings for TR thread	44	2.880-001.0		☐
NOZZLE UNION / SPACER				
Nozzle union				
Nozzle screws	45	4.112-011.0	Nozzle screws with protectors for high-pressure and power nozzles	☐
HIGH-PRESSURE HOSES				
Standard with unions on both sides				
High-pressure hose, 10 m, ID 10, 220 bar, 2 × EASY!Lock	46	6.110-041.0	Impressive values and basic equipment: 10 m long high-pressure hose (DN 10) developed for pressures up to 220 bar.	☐
High-pressure hose, 10 m, ID 6, 250 bar, 2 × EASY!Lock	47	6.110-034.0	10 m long high-pressure hose with EASY!Lock manual screw fitting on both sides. Nominal size DN 6, suitable up to 250 bar.	☐
	48	6.110-035.0	10 m long high-pressure hose (DN 6) equipped with EASY!Lock manual screw fitting on both sides. Suitable up to 250 bar and with ANTI!Twist.	☐
High-pressure hose, 10 m, ID 6, 300 bar, 2 × EASY!Lock	49	6.110-056.0	High-pressure hose (DN 6) equipped with ANTI!Twist and the new EASY!Lock manual screw fitting on both sides. For pressures up to 300 bar. 10 m long.	☐
High-pressure hose, 10 m, ID 8, 315 bar, 2 × EASY!Lock	50	6.110-031.0	High-pressure hose (DN 8) suitable up to 315 bar pressure. With innovative EASY!Lock manual screw fitting on both sides, ANTI!Twist and 10 m long.	☐
High-pressure hose, 15 m, ID 8, 315 bar, 2 × EASY!Lock	51	6.110-030.0	15 m long high-pressure hose, DN 8, with ANTI!Twist and time-saving EASY!Lock manual screw fitting on both sides.	☐
High-pressure hose, 20 m, ID 8, 315 bar, 2 × EASY!Lock	52	6.110-032.0	High-pressure hose (DN 8) with a length of 20 m and EASY!Lock manual screw fitting on both sides. Approved for max. 315 bar pressure.	☐
High-pressure hose, 30 m, ID 8, 315 bar, 2 × EASY!Lock	53	6.110-014.0	Comfortable length (30 m) and innovative EASY!Lock manual screw fitting: High-pressure hose (DN 8) with ANTI!Twist for pressures up to 315 bar.	☐
High-pressure hose, 15 m, ID 10, 220 bar, 2 × EASY!Lock	54	6.110-042.0	Equipped with innovative EASY!Lock manual screw fitting and suitable for pressures up to 220 bar: 15 m long high-pressure hose (DN 10).	☐
High-pressure hose, 20 m, ID 10, 220 bar, 2 × EASY!Lock	55	6.110-043.0	20 m in length and the extremely time-saving and comfortable EASY!Lock manual screw fitting on both sides are some of the main features of this high-pressure hose (DN 10).	☐
High-pressure hose, 25 m, ID 10, 220 bar, 2 × EASY!Lock	56	6.110-044.0	Impressive values and basic equipment: 25 m long high-pressure hose (DN 10) developed for pressures up to 220 bar.	☐

☐ Available accessories.

ACCESSORIES FOR HD 6/15 M ST
1.150-950.0

56–57, 59

58

60

61

62

63–65

66

67

68

69

70

		Order no.	Description	
HIGH-PRESSURE HOSES				
Standard with unions on both sides				
High-pressure hose, 40 m, ID 10, 220 bar, 2 × EASY!Lock	57	6.110-045.0	40 m long high-pressure hose with EASY!Lock system for the time-saving manual screw connection (both sides). Nominal size (DN) 10, working pressure up to 220 bar.	☐
High-pressure hose, 15 m, ID 12, 210 bar, 2 × EASY!Lock	58	6.110-059.0	Designed for working pressures up to 250 bar: High-pressure hose (DN 12) with a length of 15 m. Has the comfortable EASY!Lock manual screw fitting on both sides.	☐
High-pressure hose, 40 m, ID 12, 210 bar, 2 × EASY!Lock	59	6.110-060.0	With EASY!Lock manual screw fitting and lots of room for manoeuvre thanks to 40 m in length: High-pressure hose (DN 12) with EASY!Lock manual screw fitting on both sides. Suitable for working pressures up to 250 bar.	☐
Longlife 400 with unions on both sides				
High-pressure hose Longlife, 1,5 m, ID 8, 400 bar, 2 × EASY!Lock	60	6.110-024.0	1.5 m high-pressure hose (DN 8) with EASY!Lock manual screw fitting on both sides. Designed for max. 400 bar pressure.	☐
High-pressure hose Longlife, 1,5 m, ID 8, 400 bar, 1 × EASY!Lock / 1 × M22 × 1.5	61	6.110-069.0	1.5 m long high-pressure hose (DN 8) suitable for up to 400 bar pressure with double steel core. Connections: M 22 × 1.5, as well as the comfortable and quick EASY!Lock manual screw fitting.	☐
High-pressure hose Longlife, 10 m, ID 8, 400 bar, 2 × EASY!Lock	62	6.110-038.0	10 m long high-pressure hose (DN 8) with double steel core, EASY!Lock manual screw fitting on both sides, and ANTI!Twist. Approved for max. 400 bar pressure.	☐
High-pressure hose Longlife, 30 m, ID 8, 400 bar, 2 × EASY!Lock	63	6.110-023.0	High-pressure hose with double steel core, ANTI!Twist and EASY!Lock manual screw fitting on both sides. Nominal size DN 8, 30 m long, approved for max. 400 bar pressure.	☐
High-pressure hose Longlife, 20 m, ID 8, 400 bar, 2 × EASY!Lock	64	6.110-027.0	High-pressure hose with ANTI!Twist, EASY!Lock manual screw fittings and double steel core. 20 m long, nominal size DN 8, EASY!Lock manual screw fitting on both sides.	☐
High-pressure hose Longlife, 15 m, ID 8, 400 bar, 2 × EASY!Lock	65	6.110-029.0	The double steel core ensures a particularly long life of this 15 m long high-pressure hose (DN 8), which is approved for pressures up to 400 bar.	☐
Food industry version with unions on both sides				
High-pressure hose food grade, 10 m, ID 8, 250 bar, 2 × EASY!Lock	66	6.110-051.0	High-pressure hose (ID 6), 10 m long, with grey, non-marking outer covering. Approved for use in the food industry. With EASY!Lock hand screw connection at both ends.	☐
High-pressure hose food grade, 20 m, ID 8, 250 bar, 2 × EASY!Lock	67	6.110-052.0	Suitable for use in food industry: 20 m long high-pressure hose (ID 8) with grey, non-marking outer covering, ANTI!Twist and EASY!Lock hand screw connections.	☐
Longlife food design with screw connections at both ends				
High-pressure hose food grade Longlife, 10 m, ID 8, 400 bar, 2 × EASY!Lock	68	6.110-053.0	With blue, non-marking and animal fat-resistant outer covering: High-pressure hose (ID 8), 10 m long, with ANTI!Twist and EASY!Lock hand screw connection at both ends.	☐
High-pressure hose food grade Longlife, 20 m, ID 8, 400 bar, 2 × EASY!Lock	69	6.110-054.0	High-pressure hose with double steel reinforcement and blue, non-marking and animal fat-resistant outer covering. 20 m long with EASY!Lock hand screw connections.	☐
Classic				
High-pressure hose Classic, 10 m, ID 8, 315 bar × , EASY!Lock	70	4.119-005.0	High pressure hose with convenient EASY!Lock manual fitting from the Classic series by Kärcher. Also suitable for hot water high-pressure cleaners.	☐

☐ Available accessories.

ACCESSORIES FOR HD 6/15 M ST
1.150-950.0

71–72

73–74

75–76

77–79, 83–85

80–82

		Order no.	Description	
HIGH-PRESSURE HOSES				
Classic				
Hose TR DN8 31,5MPa 20m with package, 20 m, ID 8, 315 bar × , EASY!Lock	71	4.119-006.0	High pressure hose with convenient EASY!Lock manual fitting from the Classic series by Kärcher. Also suitable for hot water high-pressure cleaners.	☐
Hose TR DN8 31,5MPa 30m with package, 30 m, ID 8, 315 bar × , EASY!Lock	72	4.119-007.0		☐
Hose TR DN6 25MPa 10m with package, 10 m, ID 6, 250 bar × , EASY!Lock	73	4.119-012.0		☐
Hose assembly with package TR DN6 25MPa, 15 m, ID 6, 250 bar × , EASY!Lock	74	4.119-016.0		☐
Hose assembly with package TR DN10 25MPa, 20 m, ID 10, 250 bar × , EASY!Lock	75	4.119-019.0		☐
Hose assembly with package TR DN10 25MPa, 40 m, ID 10, 250 bar × , EASY!Lock	76	4.119-020.0		☐
PIPE CLEANING				
Pipe cleaning hose, ID 6				
Hose assembly TR pipe cleaning DN6 14MPa	77	6.110-108.0	10 m flexible high-pressure hose (DN 6) for cleaning pipes (threaded connection for R 1/8 nozzle).	☐
	78	6.110-109.0	The 20 m pipe cleaning hose is a highly flexible high pressure hose for pipe interior cleaning (threaded connection for nozzle R 1/8).	☐
	79	6.110-110.0	30 m flexible high-pressure hose (DN 6) for cleaning pipes (threaded connection for R 1/8 nozzle).	☐
Pipe cleaning hose, ID 6, 10 m, max. 250 bar	80	6.110-046.0	The 10 m pipe cleaning hose is a highly flexible high pressure hose for pipe interior cleaning (threaded connection for nozzle R 1/8).	☐
Pipe cleaning hose, ID 6, 20 m, max. 250 bar	81	6.110-008.0	The 20 m pipe cleaning hose is a highly flexible high pressure hose for pipe interior cleaning (threaded connection for nozzle R 1/8).	☐
Pipe cleaning hose, ID 6, 30 m, max. 250 bar	82	6.110-047.0	The 30 m pipe cleaning hose is a highly flexible high pressure hose for pipe interior cleaning (threaded connection for nozzle R 1/8).	☐
Pipe cleaning hose, ID 6, 10 m, max. 140 bar	83	6.110-048.0	10 m flexible high-pressure hose (DN 6) for cleaning pipes (threaded connection for R 1/8 nozzle).	☐
Pipe cleaning hose, ID 6, 20 m, max. 140 bar	84	6.110-049.0	The 20 m pipe cleaning hose is a highly flexible high pressure hose for pipe interior cleaning (threaded connection for nozzle R 1/8).	☐

☐ Available accessories.

ACCESSORIES FOR HD 6/15 M ST
1.150-950.0

77–79, 83–85

86

87

88–89

90

91

92

93

94

96, 104

97

98

		Order no.	Description	
PIPE CLEANING				
Pipe cleaning hose, ID 6				
Pipe cleaning hose, ID 6, 30 m, max. 140 bar	85	6.110-050.0	30 m flexible high-pressure hose (DN 6) for cleaning pipes (threaded connection for R 1/8 nozzle).	☐
Pipe cleaning nozzle				
Pipe cleaning dirt blaster D21/040	86	4.765-001.0	The forward-tilted rotating pencil jet removes the most stubborn dirt. The three backwards-tilted jets ensure the necessary forward movement, as well as convenient handling.	☐
Pipe cleaning dirt blaster D30/040	87	4.765-004.0		☐
Pipe cleaning nozzle	88	5.763-015.0	16 mm pipe cleaning nozzle with internal thread. Various jet directions for cleaning blocked drains and pipes.	☐
	89	5.763-016.0		☐
	90	5.763-017.0	Pipe cleaning nozzle with inner thread. Different spray directions. The hose moves freely through the pipe. (R 1/8" connection, 3 × 30° backwards, diameter 30 mm.)	☐
Rotating pipe cleaning nozzle	91	6.415-428.0	Pipe cleaning nozzle with four rotating jets and inner thread. Different spray directions. The hose moves freely through the pipe. With R 1/8" connection.	☐
FLOOR AND HARD SURFACE CLEANER				
FR Classic surface cleaner				
FR TR 40 Classic	92	4.119-029.0	The classic surface cleaner with 400 mm diameter and nozzle kit supplied (2 × size 020; others can be ordered separately).	☐
FR TR 30 Classic	93	4.119-030.0	The classic surface cleaner with 300 mm diameter and nozzle kit supplied (2 × size 018; others can be ordered separately).	☐
Hard Surface Cleaner FRV 30				
FRV 30 Surface Cleaner	94	2.111-010.0	Integrated automatic suction removes dirty water through the supplied 5 m suction hose, eliminating the need to rinse the surface after cleaning and allowing use in inside and outside areas. Features include non-marking steering rollers and double ceramic bearings. Machine-specific nozzle kit must be ordered separately. Max. 250 bar / 1000 l/h / 60 °C.	☐
Rubber lip for FRV 30	95	2.642-910.0	For smooth floors indoors. The squeegee increases the suction performance of the FRV 30 and minimises the amount of water remaining. This means the floor is dry in just a few minutes.	☐
Extension hose 5 m	96	4.440-939.0	5m extension hose for FRV 30. Connection sleeve included.	☐
Hose fastening attachment kit	97	2.642-528.0	Suction cup for fixing the suction hose to smooth surfaces.	☐
Dirt trap attachment kit	98	2.642-532.0	Galvanised steel bucket for collecting coarse dirt and for fixing the suction hose in outside areas.	☐

☐ Available accessories.

ACCESSORIES FOR HD 6/15 M ST
1.150-950.0

99

100

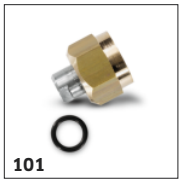
101

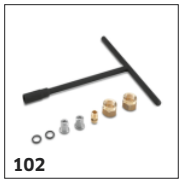
102

103

96, 104

105

106

107

108

109

110

111

112

		Order no.	Description	
FLOOR AND HARD SURFACE CLEANER				
Hard surface cleaner FR 30				
FR 30 Surface Cleaner	99	2.111-011.0	Up to 10 times greater area performance compared with the conventional high-pressure jet. Plastic casing for optimal manoeuvrability, double ceramic bearing for long working times, flexible connection joint for optimal handling and integrated parking position. Machine-specific nozzle kit must be ordered separately. Max. 180 bar / 850 l/h / 60°C.	☐
FR 30 Me surface cleaner				
Hard Surface Cleaner FR 30 Me	100	2.111-013.0	Hot water resistant stainless steel surface cleaner with double ceramic bearings, non-marking swivel castors and suction hose connection. Ideal for indoor cleaning, e.g. food industry.	☐
Machine-specific nozzle kits for FR				
Nozzle kit for FR, 500 l/h – 650 l/h	101	2.640-401.0	Nozzle kit includes power nozzles and unions. For Kärcher surface cleaners (500 to 650 l/h).	☐
Machine-specific nozzle kits for FRV				
Nozzle kit for FRV, 035	102	2.642-430.0	Machine-specific nozzle kit with Kärcher power nozzles and jet nozzle for FRV 30.	☐
FRV 30 Me surface cleaner				
FRV 30 Me Surface Cleaner	103	2.111-012.0	The stainless steel FRV 30 Me Surface Cleaner is designed for hot water cleaning up to 85 °C in inside and outside areas. Integrated automatic suction removes dirty water directly during operation.	☐
Extension hose FRV 30 Me and FRV 50 Me	104	4.441-040.0	5 m extension hose for FRV 30 Me. Includes connecting adapter.	☐
FOAM SYSTEMS				
Cup foam lance				
Cup foam lance Advanced 1, 400 l/h – 600 l/h	105	4.112-063.0	Cup foam lance Advanced 1 with spray angle adjustment and main body made of lead-free brass. Suitable for Kärcher high-pressure cleaners with a flow rate of 400 to 600 l/h.	☐
Cup foam lance DUO Advanced 1, 400 l/h – 600 l/h	106	4.112-067.0	DUO Advanced 1 cup foam lance with two-litre detergent tank and direct switching to high-pressure cleaning. Suitable for Kärcher pressure washers with a flow rate of 400 to 600 l/h.	☐
Foam lance TR 400-600 L/H, 400 l/h – 600 l/h	107	4.119-027.0	The Classic cup foam lance has a 1-litre container and allows the detergent dosing unit and the angle of the detergent jet to be adjusted with precision.	☐
Cup foam lance Basic 1, 350 l/h – 600 l/h	108	4.112-053.0	Basic 1 cup foam lance for high-pressure cleaners with a flow rate of 350–600 l/h: Reduces cleaning agent consumption by 50% compared to cup foam lances without a dosing facility.	☐
1-litre cleaning agent container for cup foam lance basic	109	5.071-414.0	For the quick change of the cleaning agent: Additional 1 litre cleaning agent container for basic foam lance (2.112-053.0, 2.112-054.0 and 2.112-055.0).	☐
1-litre cleaning agent container for cup foam lance advanced	110	6.414-050.0	Additional 1-litre cleaning agent container for quick replacement of the cleaning agent (for foam lance 2.112-017.0 and 2.112-018.0).	☐
Inno Foam Kit				
Inno Foam Set with detergent injector	111	2.112-000.0	High-pressure foam system with double lance (foam nozzle and high-pressure jet for rinsing). For use with mobile and stationary high-pressure and HDS pressure cleaners for cleaning or disinfection.	☐
Easy Foam Set				
Easy Foam Set with RM injector	112	2.112-010.0	HP foam system for use with. HD/HDS units for cleaning and disinfecting. Foam nozzle for connection to lance and HP chemical injector with precision 0-5% metering valve. The machine specific nozzle kit has to be ordered separately.	☐

☐ Available accessories.

ACCESSORIES FOR HD 6/15 M ST
1.150-950.0

113

114

115

116

117

118

119–120

121

122

123

124

125

126

		Order no.	Description	
FOAM SYSTEMS				
Nozzle kits for Inno/Easy Foam Set				
Nozzle kit 055 for Inno / Easy Set 500–600 l/h	113	2.111-009.0	Optimal adaptation to different machine outputs for economic use.	☐
Foam nozzle mounting kit				
Foam nozzle attachment kit	114	2.112-013.0	Foaming agent kit. The foam nozzle is ideal for use in sanitary areas and the food industry and wherever long application times are necessary.	☐
MIXERS AND INJECTORS				
Cleaning agent injector				
Cleaning agent injector for high and low pressure (without nozzles)	115	4.637-032.0	Detergent injector for independent high and low pressure dosage. Maximum dosage about 15%.	☐
Cleaning agent injector for high pressure (without nozzle)	116	4.637-033.0	Cleaning agent dosage at high pressure 3 – 5 %	☐
Stainless steel injector kit for HD 6/15C	117	6.645-758.0	Ideal for the HD 6/15 C high-pressure cleaner, the stainless steel injector ensures precise cleaning agent and foam dosage. With suction hose and vacuum filter.	☐
Machine-specific nozzle kit with order no. 4.637-033.0				
Nozzle kit HD 500–700 l/h	118	4.769-005.0	For HD 500 – 700 l/h. Consists of nozzle insert + HP power nozzle + union	☐
Nozzle insert with order no. 4.637-032.0				
Nozzle insert up to 1,100 l/h – high pressure	119	4.769-003.0	Nozzle insert for detergent injector 3.637-001 for high-pressure detergent application. For high-pressure cleaners with a water flow rate up to 1100 l/h.	☐
Nozzle insert from 1,100 l/h – ND	120	4.769-006.0	For low pressure with machines above 1.100 l/h	☐
COUPLING PARTS				
Rotary coupling				
Rotary coupling	121	4.111-021.0	Reliably prevents twisting of HP hoses. Connection Easy!Lock. Handle protection	☐
Connector				
Screw socket for surface cleaners and Servo Control controllers	122	4.111-022.0	For attaching high-pressure nozzles and accessory parts to the HD trigger gun (with nozzle screws) – 1 × M 22 × 1.5/1 × M 18 × 1.5.	☐
Short spray unit	123	4.111-038.0	For attaching high-pressure nozzles and accessory parts to HP trigger gun (with nozzle screws). Not compatible with triple nozzles.	☐
Y distributor	124	4.111-024.0	Offers the option to connect two spray units to the machine. Installation on the high pressure outlet.	☐
EASY!Lock adapter				
Adapter 1 M22AG-TR22AG	125	4.111-029.0	Adapter 1 to connect the old hose with the new hose	☐
Adapter 2 M22IG-TR22AG	126	4.111-030.0	Adapter 2 to connect the old device with the new hose and the old gun with the new hose	☐

☐ Available accessories.

ACCESSORIES FOR HD 6/15 M ST
1.150-950.0

127

128

129

130

131

132

133

134

135

136

137

138

139

140

		Order no.	Description	
COUPLING PARTS				
EASY!Lock adapter				
Adapter 3 M22IG-TR22AG	127	4.111-031.0	Adapter 3 to connect the old gun with the new spray lance and new servo regulator	☐
Adapter 4 TR22IG-D11	128	4.111-032.0	Adapter 4 to connect the new gun with the old swivel hose	☐
Adapter 5 TR22IG-M22AG	129	4.111-033.0	Adapter 5 to connect the new gun with the old spray lance and new servo regulator with the old spray lance	☐
Adapter 6 TR22IG-M22AG	130	4.111-034.0	Adapter 6 to connect the new device with the old hose and the old hose with the new gun	☐
Adapter 7 M18IG-TR20AG	131	4.111-035.0	Adapter 7 to connect the old spray lance with the new nozzle	☐
Adapter 8 TR20IG-M18AG	132	4.111-036.0	Adapter 8 to connect the new spray lance with the old nozzle	☐
Adapter hose extension 9 TR	133	4.111-037.0	Adapter 9 to connect the new hose with the new hose	☐
Adapter 12 rotary coupling EASY!Lock 22 IG – M22 × 1.8 AG	134	4.111-046.0	Rotatable adapter for connecting EASY!Force high-pressure gun and high-pressure hoses with M 22x1.5 connection	☐
HOSE REELS				
Manual hose reel attachment kit				
Hose reel attachment kit for HD middle class, 15 m	135	2.110-024.0		☐
Automatic, self-winding hose reels for wall mounting				
Automatic plastic hose reel incl. high-pressure hose, 15 m	136	2.639-257.0	Spring-mounted and ready-to-use automatic hose reel for wall mounting. Simplifies handling of the high-pressure hose, shortens set-up times and increases occupational safety.	☐
Automatic hose reel, powder-coated steel / plastic, 20 m	137	6.392-074.0	Automatic hose reel for 20 m high-pressure hose. The console is made from powder-coated steel, the drum is made from plastic.	☐
Automatic stainless steel / synthetic material hose drum, 20 m	138	6.392-083.0	Automatic hose reel for 20 m high-pressure hose. The console consists of stainless steel, the drum is made from plastic.	☐
Automatic hose reel, coated, 20 m	139	6.392-106.0	Automatic hose reel of durable plastic. Painted steel bracket. Suitable for 20 m high-pressure hose.	☐
Hose reel, automatic, basalt grey-coated, 20 m	140	6.392-105.0	Automatic hose reels provide the highest level of safety and convenience for winding and unwinding HP hoses. For example: order no. 6.110-011.0 (ID 8, 20 m, 315 bar) or order no. 6.110-028.0 (ID 8, 20 m, 400 bar Longlife).	☐

☐ Available accessories.

ACCESSORIES FOR HD 6/15 M ST
1.150-950.0

142

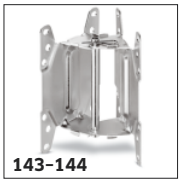
143–144

145

146

147

148

149

150

151

152

153

154–155

		Order no.	Description	
HOSE REELS				
Automatic, self-winding hose reels for wall mounting				
Automatic hose reel, stainless steel, includes swivel holder, 20 m	141	6.392-076.0	Automatic stainless steel hose reel. With swivel holder. Suitable for 20 m high-pressure hose.	☐
Automatic stainless steel hose reel, 40 m	142	6.392-442.0	Automatic hose reels provide the highest level of safety and convenience for winding and unwinding HP hoses. Compatible high-pressure hose, e.g. order no. 6.110-076.0 (ID 8, 40 m, 400 bar, 1x hose reel connection attachment kit).	☐
Zinc-coated swivel holder	143	2.639-931.0	Swivel holder for automatic hose reel wall mounting. For maximum action radius and flexibility of high-pressure hose. Rotatable 120°. Galvanised steel.	☐
Stainless steel swivel holder	144	2.641-867.0	Swivelling wall bracket made of high-grade steel (for 2.641-866). This makes maximum flexibility and convenience possible when working with the HP hose.	☐
FACADE AND SOLAR PANEL CLEANING				
Brushes				
Drive for roller brush 500	145	4.762-584.0	Hydraulic drive for rotating roller brushes. For cleaning façades or solar power installations with our professional high-pressure cleaners. Installation on spray lance or telescopic lance.	☐
Splash guard for roller brush 500	146	4.762-621.0	Splash guard with velcro fastening for rotating roller brush. Clear view of the brush thanks to transparent film, with protection against splashes at the same time.	☐
Roller brush 500 soft	147	4.762-623.0	Soft brush attachment for use with hydraulic drive (4.762-584.0). Ideal for glass and solar power installation cleaning. Easy quick-change system and secure mounting on drive.	☐
Roller brush 500 medium	148	4.762-624.0	Medium-hard brush attachment for use with hydraulic drive (4.762-584.0). Suitable for sensitive façades, foils and fabrics. Easy and safe quick-change system.	☐
Roller brush 500 hard	149	4.762-625.0	Hard brush attachment for use with hydraulic drive (4.762-584.0). For rough façades, stone and wooden patios. Safe and easy quick-change system.	☐
Brush hard	150	6.960-133.0	Brush with hard bristles for cleaning industry facades and floor coverings and removing coarse dirt. Simple installation on telescopic lances or high-pressure lances from Kärcher.	☐
Brush medium	151	6.960-134.0	Optimally cleans facades, roller shutters and textile fabrics: the brush with medium-hard bristles for fast and simple attachment to telescopic lances or high-pressure lances from Kärcher.	☐
Brush soft	152	6.960-135.0	For simple installation on telescopic lances or high-pressure lances from Kärcher: brush with soft bristles for deep cleaning of sensitive surfaces such as glass or solar systems.	☐
Telescopic lances				
TL low pressure adapter	153	4.580-097.0	TL low-pressure adapter comprising ball valve for tool-free installation on telescopic lances. Ideal for applications with rotating high-pressure brushes.	☐
Telescopic lance TL 7 F	154	4.762-609.0	Telescopic lance TL 7 F with 7 m reach made from lightweight glass fibre. With quick-release fasteners for retraction and extension.	☐

☐ Available accessories.

ACCESSORIES FOR HD 6/15 M ST
1.150-950.0

154–155

156–157

158

159

160–16

163–165

166

167–168

		Order no.	Description	
FACADE AND SOLAR PANEL CLEANING				
Telescopic lances				
Telescopic lance TL 7 H	155	4.762-610.0	Multifunctional hybrid telescopic lance TL 7 H made of rigid and lightweight carbon-glass fibre mix. Telescopic thanks to quick-release fastenings. Up to 7 m reach.	☐
Telescopic lance TL 10 H	156	4.762-611.0	Up to 10 m reach: hybrid telescopic lance TL 10 H. Comprising carbon-glass fibre mix and suitable for multifunctional use. Simple retraction and extension thanks to quick-release fasteners.	☐
Telescopic lance TL 10 C	157	4.762-612.0	Carbon fibre telescopic lance TL 10 C. With up to 10 m reach and practical quick-release fasteners. Multifunctional use for cleaning facades, windows or solar panels.	☐
Telescopic lance TL 14 C	158	4.762-613.0	Maximum rigidity with minimum weight: telescopic lance TL 14 C made from carbon fibre. Enormous reach of 14 m, multifunctional use and easy to use thanks to quick-release fasteners.	☐
TL high pressure adapter	159	4.775-154.0	TL high-pressure adapter, flexible high-pressure gun for high-pressure cleaning with telescopic lances. Ergonomic, easy to install, suitable for right- and left-handed individuals.	☐
Water softening				
WS 50	160	6.368-463.0	The mobile WS 50 water softening unit prevents lime residue from forming on cleaned surfaces. This is achieved by an ion-exchange resin that removes the dissolved limescale from the water.	☐
WS 100	161	6.368-464.0	The mobile WS 100 water softening unit prevents lime residue from forming on cleaned surfaces. This is achieved by an ion-exchange resin that removes the dissolved limescale from the water.	☐
WS Regenerator	162	6.368-465.0	With the WS Regenerator regeneration system, the softening cartridges of the water softening units WS 50 and WS 100 can be backflushed and regenerated at the push of a button.	☐
Hoses				
iSolar HP hose 7	163	6.392-978.0	High-quality, flexible HP hose (with rubber covering) for the iSolar TL 7. The outer layer has especially good sliding properties when extending and retracting the telescopic rod.	☐
iSolar HP hose 10	164	6.392-977.0	High-quality, flexible HP hose (with rubber covering) for the iSolar TL 10. The outer layer has especially good sliding properties when extending and retracting the telescopic rod.	☐
iSolar HP hose 14	165	6.392-976.0	High-quality, flexible HP hose (with rubber covering) for the iSolar TL 14. The outer layer has especially good sliding properties when extending and retracting the telescopic rod.	☐
Attachment kits and adapters				
iSolar fall protection	166	6.988-152.0	Certified personal security system for rooftop work. Contents: Travelling fall arrestor with shock absorber and 15 m kernmantle rope, harness, anchoring sling and sheet steel case.	☐
WET BLASTING ATTACHMENT				
Wet blasting attachment (without nozzle)				
Wet blasting attachment with flow control (without nozzles)	167	4.115-000.0	Paint, rust and scale removal made easy: Kärcher wet blasting attachment with flow control for adding blasting abrasive to the high-pressure jet.	☐
Wet blasting attachment without flow control (nozzles not included)	168	4.115-006.0	Addition of spray agent to the high pressure jet. For paint stripping, rust removal and descaling. Assembly on spray lance instead of high-pressure nozzle. Without water flow regulation	☐

☐ Available accessories.

ACCESSORIES FOR HD 6/15 M ST
1.150-950.0

169

170

171–173

174

175

176

178

179

180

181

182

		Order no.	Description	
WET BLASTING ATTACHMENT				
Nozzle kits for wet jet unit				
Nozzle kit for wet jet unit 035	169	2.112-021.0	Nozzle kit with wet blasting nozzle and nozzle insert (type specific). For optimal Kärcher wet blasting attachment performance. Only in combination with wet blasting attachment 4.115-000.0 | 4.115-006.0.	☐
Boron carbide nozzle				
Boron carbide nozzle, for machines up to 1,000 l/h	170	6.415-084.0	In addition to nozzle packs. Very wear-resistant nozzle with boron carbide chuck for continuous-duty operation.	☐
WATER CONNECTION				
Geka coupling				
Geka connector with hose barb, R 1/2"	171	6.388-461.0	with hose liner	☐
Geka connector with hose barb, R 3/4"	172	6.388-455.0		☐
Geka connector with hose barb, R 1"	173	6.388-465.0	with hose barb	☐
Geka connector with inner thread, R 3/4"	174	6.388-473.0	with female thread	☐
Suction filter				
Water suction filter	175	6.414-956.0	Suitable for ponds, storage tanks or similar, polyamide filter casing, stainless steel strainer, 800 µm mesh, R 3/4" and R 1" connection, without non-return valve	☐
Suction filter with check valve	176	4.730-012.0	Brass suction filter suitable for ponds, storage tanks, etc. With check valve.	☐
Water fine filter				
Universal water fine filter, 25 µm	177	2.637-020.0	Fine water filter, mesh size 25 µm, max. temperature 50° C. Protects the device from dirt particles in the water. Maximum flow rate: 1,200 l/h. Connection 3/4", including 1" adapter.	☐
Water fine filter, 100 µm, R 3/4"	178	2.637-691.0	Fine-mesh water filter, 100 µm, max. temperature 60°C. Protects the high-pressure cleaner from dirt particles contained in the water. Transparent filter cup. Water flow rate up to 1200 l/h. Connector 3/4".	☐
Water fine filter, with adapter	179	4.730-102.0	Fine-mesh water filter, 125 µm, max. temperature 50°C. Protects the high-pressure cleaner from dirt particles contained in the water. Water flow rate up to 1200 l/h. Connection 3/4", with adapter, 1".	☐
WASHING BRUSHES				
Push-on washing brush				
Push-on wash brush	180	4.113-001.0	For universal use for surface cleaning. Mounted using clamp directly at the spray lance. TR thread connection	☐
Rotating washing brush				
Rotating wash brush for < 1000 l/h machines, nylon bristles	181	4.113-004.0	The rotating wash brush gently removes fine dust and traffic film from all surfaces. Temperature resistant up to 60°C. (M 18 × 1.5, replaceable brush insert).	☐
Rotating wash brush for machines < 1000 l/h, natural bristles	182	4.113-003.0	Driven by water stream. Gently removes fine dust and traffic film from any surface. Temperature resistant up to 60°C, M 18 × 1.5 (replaceable brush insert).	☐

☐ Available accessories.