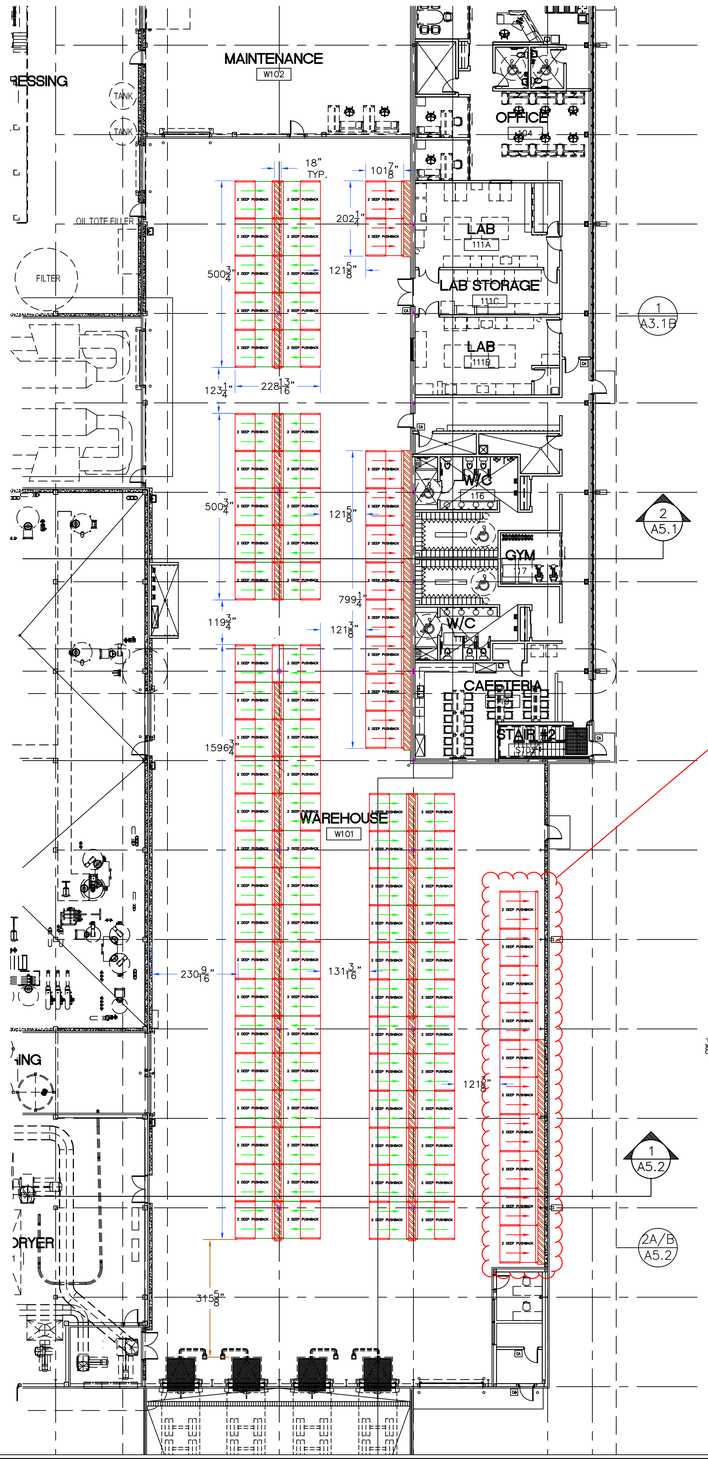

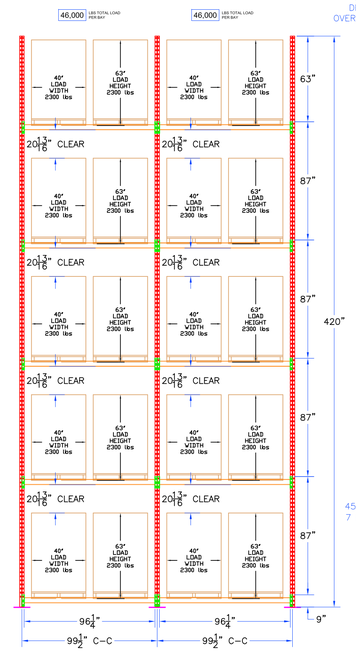

FRONT ELEVATION

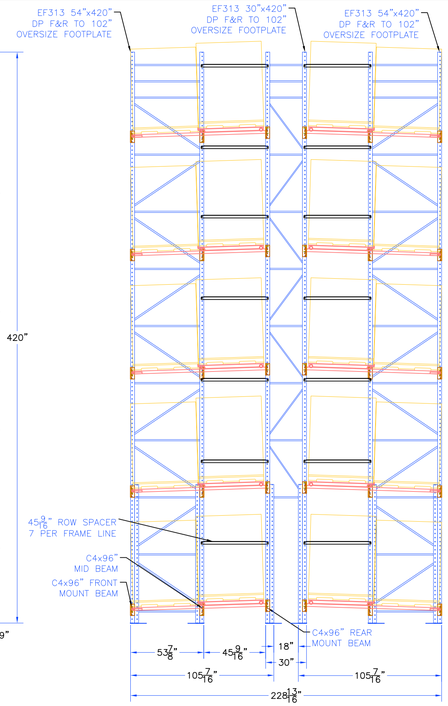

SIDE ELEVATION BACK TO BACK

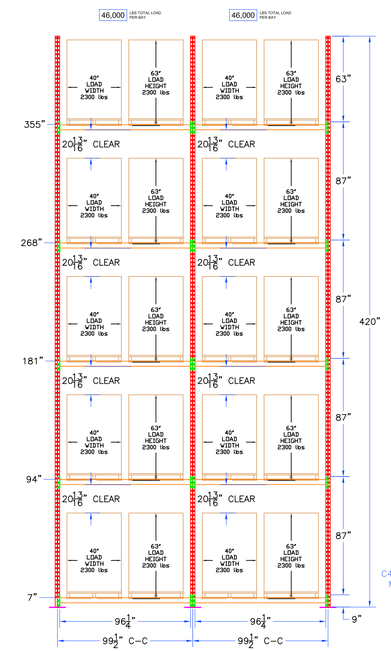

FRONT ELEVATION

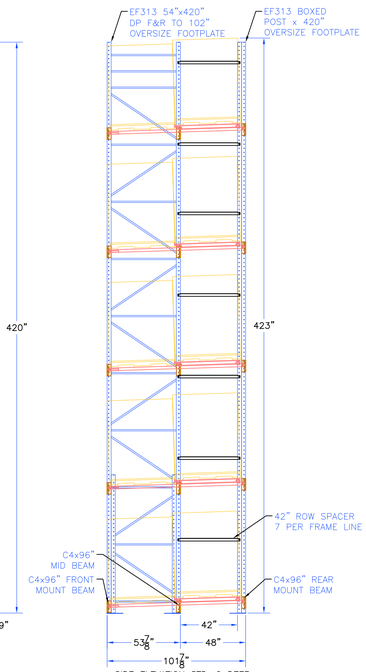

SIDE ELEVATION STD. 2 DEEP

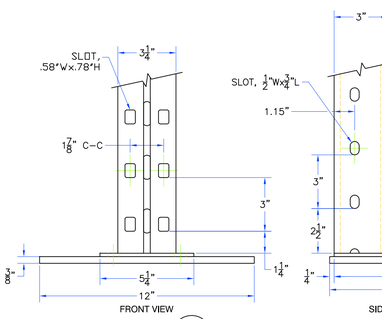

A 1:4 NAS RACK COLUMN
EF313 + EF313 DBL POST c/w BEARING PLATE

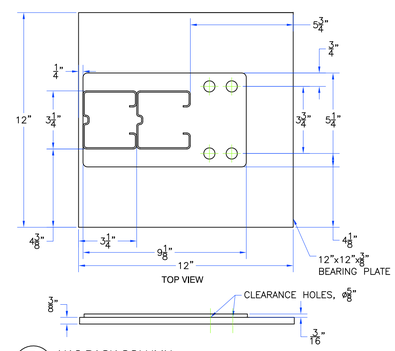

B 1:4 NAS RACK COLUMN
EF313 + EF313 DBL POST c/w BEARING PLATE

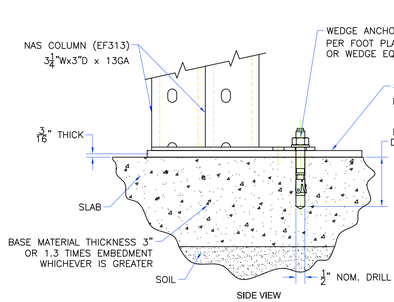

C 1:4 RACK ANCHOR DETAIL
EF313 + EF313 DBL POST c/w BEARING PLATE

REVISE WAREHOUSE RACKING AS PER RA-37.0

REVIEWED (X)
REVIEWED AS MODIFIED ( )
REVISE AND RE-SUBMIT ( )
NOT REVIEWED ( )
Date: 2020-06-05
RAYMOND WAN, Architect
By: SA

This review by Raymond Wan, Architect is for the sole purpose of ascertaining conformance with the general design concept of the project and general compliance that Raymond Wan, Architect approves the detail design inherent in the shop drawings, responsibility for which shall remain with the Contractor submitting same, and such review shall not relieve the Contractor of his responsibility for errors or omissions in the shop drawings or of his responsibility for meeting all requirements of the Contract Documents. The Contractor is responsible for dimensions to be confirmed and correlated at the job site, for information that pertains solely to fabrication processes or to techniques of construction and installation and for co-ordination of the work of all sub-trades.

CROSIER KILGOUR & PARTNERS LTD.
REVIEWED ☐ NOT REVIEWED ☐
REVIEWED AS MODIFIED ☒ REJECTED ☐
REVISE AND RE-SUBMIT ☐ DATE: 2020/06/05
BY: tw

This review is for the sole purpose of ascertaining general conformance with the design concept of the project and general compliance with the information given in the contract documents. This review does not mean approval of the detail design inherent in the shop drawings, responsibility for which shall remain with the Contractor submitting same, and such review shall not relieve the Contractor of his responsibility for errors or omissions in the shop drawings or of his responsibility for meeting all requirements of the Contract Documents. The Contractor is responsible for dimensions to be confirmed and correlated at the job site, for information that pertains solely to fabrication processes or to means, methods and/or techniques of construction and installation, for coordination of the work of all other trades, and for performing all work in a safe and satisfactory manner.

BIRD
Project: MERIT FUNCTIONAL FOODS
The receipt and review of this submission is for the sole purpose of reviewing general conformance with the construction and / or design concepts only. The review of this submission does not relieve the supplier or subcontractor of the complete responsibility for errors or omissions or for non-compliance with the contract documents. Supplier is responsible for meeting all the requirements of the contract documents as they relate to this submission.
REVIEWED
REVIEWED AS NOTED
REVISE AND RESUBMIT
REJECTED AS NOTED
REVIEWED BY: Allan Schreiber
BIRD CONSTRUCTION

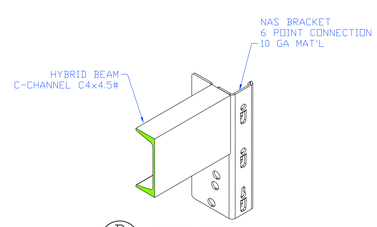

D NTS HYBRID BEAM
C4x4.5# C-CHANNEL & BRKT

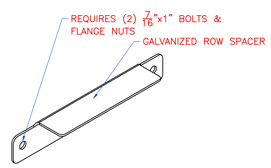

E NTS GALVANIZED ROW SPACER
7/16" HARDWARE INCLUDED

SITE PARAMETERS

LOCATION DATA:	Manitoba, Rosser
GEOTECHNICAL REFERENCE DOC:	None on file
PROJECT FILE: P1274-042	6/1/2020
RECOMMENDED SITE CLASS:	D
IMPORTANCE FACTOR :	1 (Normal)

SPECTRAL ACCELERATION VALUES

Sa(0.2)	Sa(0.5)	Sa(1.0)	Sa(2.0)	Sa(5.0)	PGA_{REF}
0.054	0.032	0.016	0.007	0.001	0.032

SITE CLASS FOUNDATION FACTORS

F(0.2)	F(0.5)	F(1.0)	F(2.0)	F(5.0)	F(PGA)
1.240	1.470	1.550	1.570	1.580	1.490

DOWN AISLE - DESIGN SPECTRAL ACCELERATION, S(T)

S(Ta)	S(0.2)	S(0.5)	S(1.0)	S(2.0)	S(5.0)
0.009	0.067	0.047	0.025	0.011	0.002

CROSS AISLE - DESIGN SPECTRAL ACCELERATION, S(T)

S(Ta)	S(0.2)	S(0.5)	S(1.0)	S(2.0)	S(5.0)
0.020	0.067	0.047	0.025	0.011	0.002

BASEPLATE REACTIONS

ELEVATION	Push Back Bay	
EVALUATED AT	9200	LBS AVERAGE/MAXIMUM
CROSS AISLE	100%	% OCCUPANCY
DOWN AISLE	60%	% OCCUPANCY
23,000	LBS.	LIVE LOAD / BASEPLATE (1.0 * LL)
682	LBS.	DEAD LOAD / BASEPLATE (1.0 * DL)
24,682	LBS.	DESIGN STATIC LOAD / BASEPLATE (1.0 * DL + (1.0 * LL)
33,053	LBS.	FACTORED STATIC LOAD / BASEPLATE (1.25 * DL + (1.4 * LL)
26,143	LBS.	STATIC SEISMIC LOAD / BASEPLATE - CROSS AISLE (1.0 * SL) + (1.0 * DL) + (1.0 * LL)
0	LBS.	PEAK TENSION
23,966	LBS.	STATIC SEISMIC LOAD / BASEPLATE - DOWN AISLE (1.0 * SL) + (1.0 * DL) + (1.0 * LL)
0	LBS.	PEAK TENSION

1.25DL+1.5LL revise loads

not acceptable
max factored post load 24 kips

PROFESSIONAL ENGINEER:

NAME: R.K.E. FABRICIUS P.ENG.
ADDRESS: 300 HOPKINS ST.,
WHITBY, ON L1N 2B9
PHONE: 905-668-3330 EXT. 115

Professional Engineer Stamp

The engineer herewith is not the engineer of record for the overall project & is certifiying the design of the rack storage components only, provided by NAS to satisfy the design requirements shown.
This certification excludes the erection of the Rack Storage System.

PROVINCE OF MANITOBA
R.K.E. FABRICIUS
Member
30090
REGISTERED PROFESSIONAL ENGINEER

Rev.	Date	By	Description
5	01JUN20	GJ	ADDED WORST CASE POST LOAD & ENG STAMP
4	28MAY20	DG	REVISED LAYOUT - MOVED 4 BAYS FROM WEST WALL TO EAST WALL
3	05MAY20	GJ	REVISED LAYOUT & SIDE ELEVATION TO BACK TO BACK
			ADDED BEARING PLATES UNDER FRAME FOOTPLATES
1	21APR20	GJ	REVISED FOOTPLATE TO 12"x12"x3/8" C/W SEISMIC HOLE PATTERN

Maximum Permissible Design Load of Rack

1. Rack frame allowable load capacity is based on beam locations and load rail uniformly distributed loading as shown in the elevations. Capacities shown are based on new components only.
2. Any modifications of size or location of components shall revise the maximum permissible design load indicated. Repair or replace any damaged components contact the NAS representative for complete revised drawing
3. Customer is recommended to display signage indicating maximum permissible design load in a prominent unobstructed viewing position.

Slab Notes

1. NAS assumes absolutely no responsibility:
   - for the design and construction of the floor slab and foundation.
   - the floor slab is assumed to be level within 1/8" in 10'-0" non-cumulative
   - for any equipment installed within the floor slab such as electrical cables, piping, heaters, etc.
2. Column base plates are designed not to exceed the allowable bearing stress of concrete that has a minimum compressive strength of 2500 p.s.i. @ 28 days. Floors must be designed by the contractor to adequately resist all reaction loads by the storage system's columns.
3. If anchors are installed within 90 days of the slab pour, they should be re-torqued after the 90 days.
4. Shimming that is required due to floor conditions must be specified. Multiple shims should be welded to the frame footplates. Extreme areas may require longer anchors for proper embedment.

Design Notes

1. Design loads and/ or combinations of, (if shown) are in accordance to CSA 344.2/05 (R2011), ANSI MH16.1-2012 (RMI) , CSA S16.1-14 or CSA S136-12, as applicable. Certification is limited to the structural design of the steel storage system only, as per this drawing.
2. All welds & dimensions are in imperial (SI) units. All welding is in accordance to CSA W47.1-09 (R2014) and W59-13.
3. Bolting material shall conform to ASTM A325-14 or SAE Gr.5; Torque to ASTM A325, Sec.23.6.
4. Anchor material shall conform to ASTM A307-14.
5. Plate material shall conform to CSA G40.21-13
6. Structural material shall conform to CSA G40.21-13.
7. Cold formed material shall conform to ASTM 1011
8. Gauge material shall conform to ASTM 1011

Installation Notes

1. Work area must be clear, broom cleaned and well lit for installation to proceed, 120V power receptacle nearby.
2. Access to a substantially large lay down and set up area is required.
3. Material staging area adjacent to the work site is required.
4. All materials to be installed as per layout and elevation drawing provided, any changes must be marked on drawings and submitted to NAS for revision.
5. Material is powder coated and shipped immediately on tarpaulin covered trucks to site, therefore any dust and/ or debris on the storage systems are the responsibilities of other to remove.
6. Anchors and bolts must conform to drawing.
7. Every beam connector to have safety pin, or spring clip, or 5/16"D N&B installed and fully engaged.
8. Erection of the racking system should be by a professional rack erection company that is familiar with the design & assembly of the shown system.

General Notes

NAS assumes absolutely no responsibility:
- for the building structure or components attached from the storage system to the building.
- for any load and force reactions between the storage system and the building (this is solely the customer's own design and liability).
- any building permits, licenses or fees.
- fire and sprinkler protection per the governing judicial authority.
- for the design and construction of the floor slab and foundation.

Customer to ensure storage at the ground level does not prohibit access to any exits or main aisles as required by applicable fire and building codes.

Project

MERIT FOODS

ROSSER MANITOBA

ALMONT INDUSTRIAL MATERIALS

Customer Appr'd.
Initial:
Date:

Designed by: GJ
Date: 14JAN20
Reviewed by:

NORTH AMERICAN STEEL
www.northamericansteel.ca Tel: (905) 668-3300

Title: Layout & Elevations

Dwg. No : DGJ20200114QDG6232 REV 5

Sheet: 1 of 1