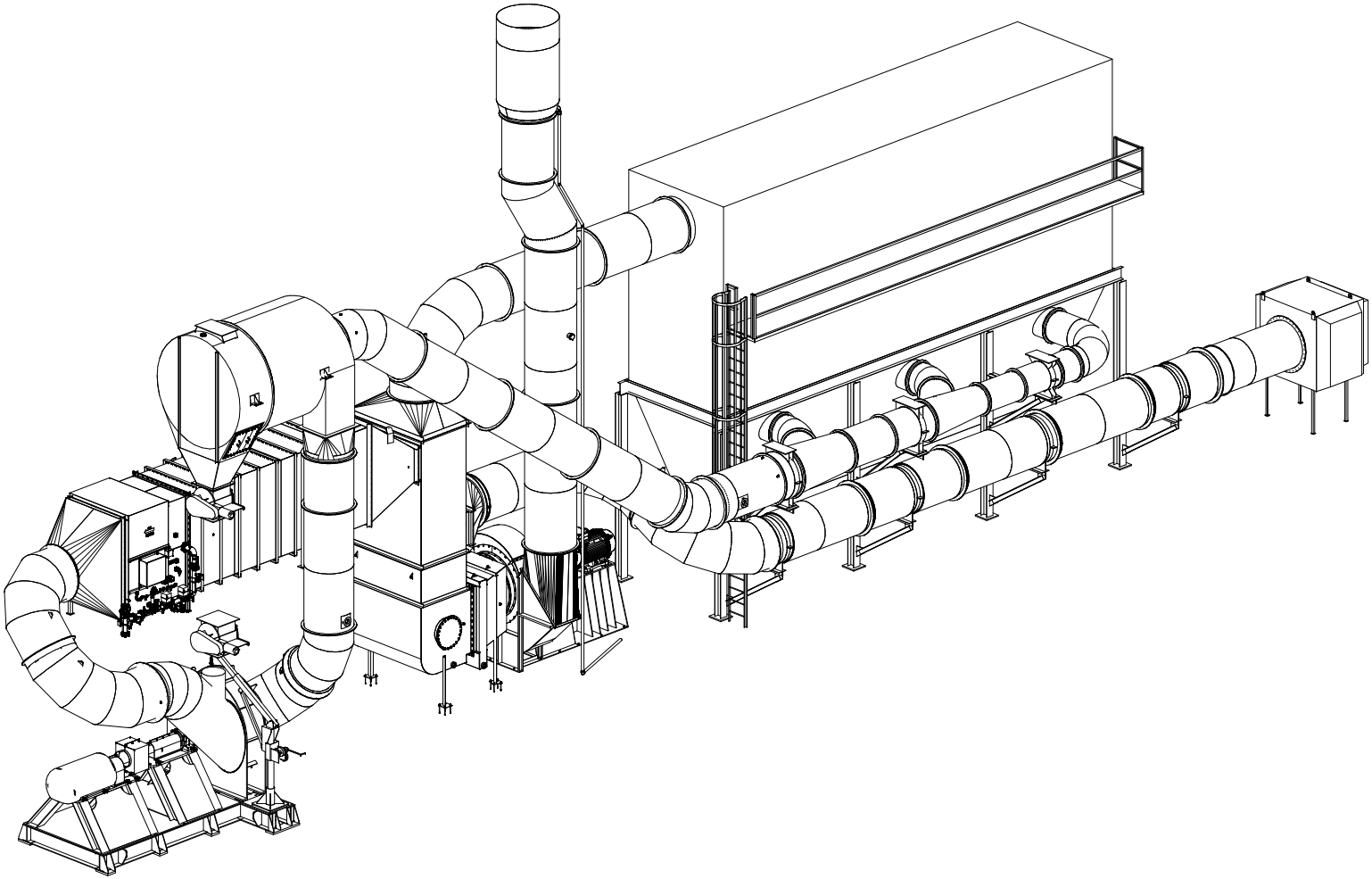

REV.	BY	DESCRIPTION	DATE
0	DLU	IFC	08/06/2020

SPERLING INDUSTRIES LTD
51 STATION ST.
BOX 100, ROG 2M0
SPERLING, MANITOBA
SPERLING@SPERLINGIND.COM
WWW.SPERLINGIND.COM

PROJECT: STARCH DRYER DUCTING - MERIT FOODS
CUSTOMER: BIRD CONSTRUCTION
LOCATION:
TITLE: ISO

DRAWN BY: DLU	JOB No.	DRG No.	REV
DATE: 07/22/2020	16023	t0000-E1	0

Tank Structures