APPROVED FOR MANUFACTURE		
MWO	DATE	BY
PURCHASING ☐	RECEIVING ☐	SHOP ☐

REVISIONS			
NO	DESCRIPTION	DATE	BY

A3
NUMBER 12-07

HX37
Quantity of 1

NEED DESIGN CALCULATIONS FOR EACH HEAT EXCHANGER

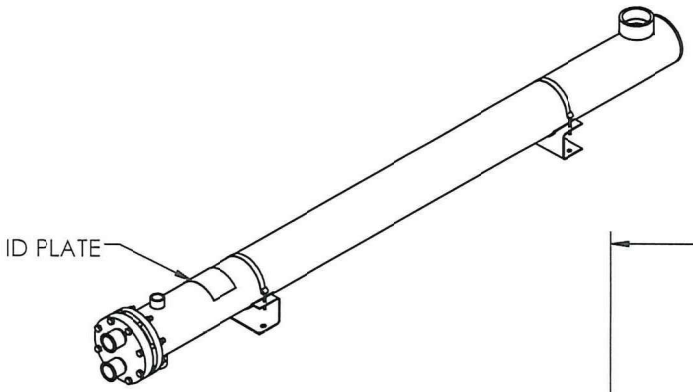

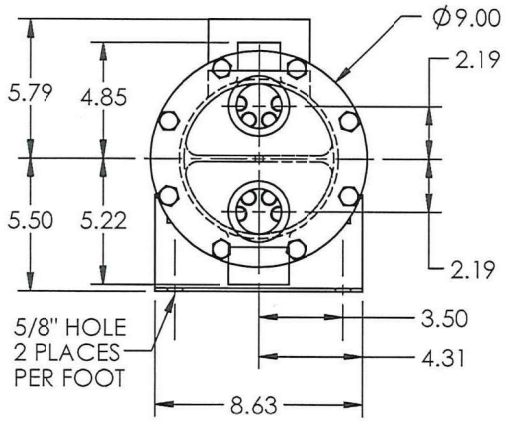

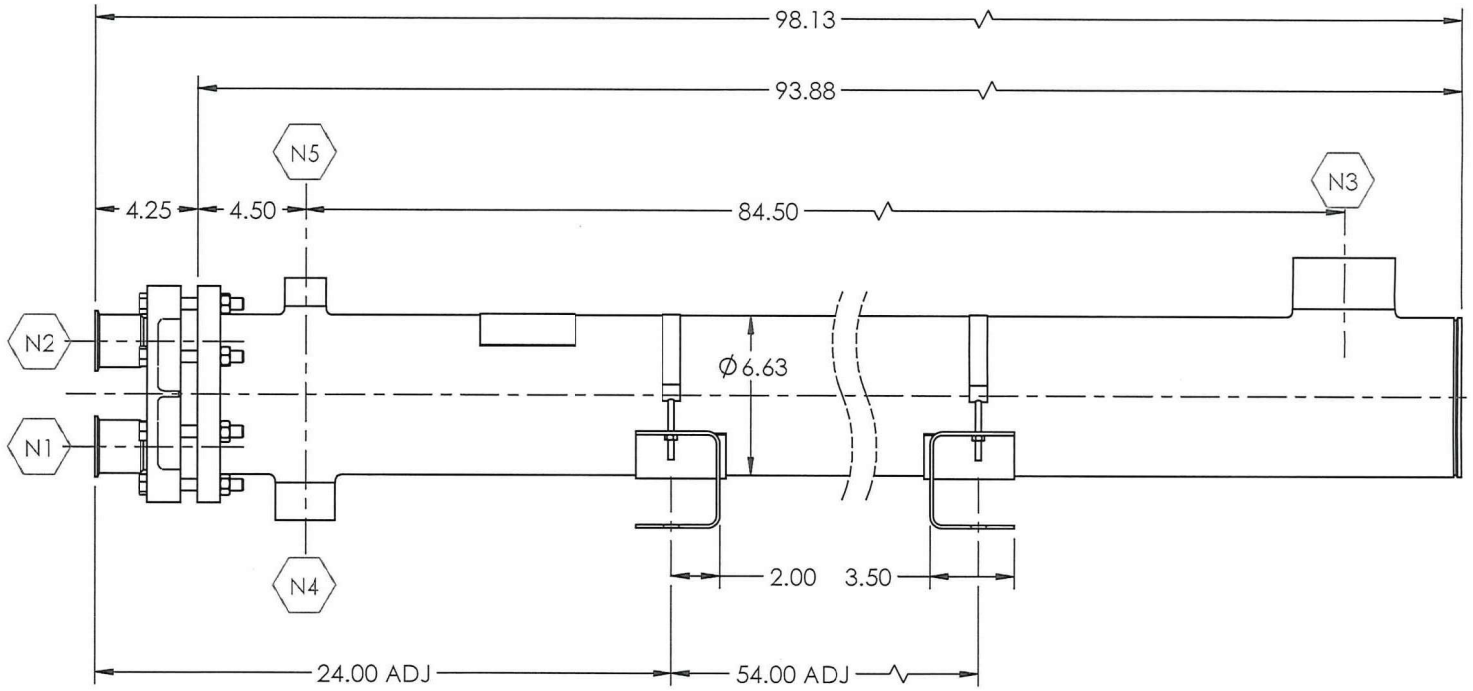

XXXX
CERTIFIED BY: ENERQUIP, LLC
M.A.W.P.
SHELL SIDE: 150 PSIG @ 375 °F
TUBE SIDE: 150 PSIG @ 375 °F
MIN. DESIGN METAL TEMP.
SHELL SIDE: -20 °F @ 150 PSIG
TUBE SIDE: -20 °F @ 150 PSIG
SERIAL NO:
BUILT: CRN:
TAG NO:

U
W

PRODUCT CONTACT SURFACES SHALL MEET 3-A DAIRY STANDARD 12-07 FINISH REQUIREMENTS OF 32 Ra OR BETTER, INCLUDING SA-213 SEAMLESS TUBING. EXTERIOR TO BE POLISHED TO APPROX. 40 Ra FINISH.
SHELL SIDE MATERIAL: 304L
TUBE SIDE MATERIAL: 316L
GASKET MATERIAL: EPDM O-RING

FOOT SUPPORTS SHOWN ARE INCLUDED

NOZZLE SCHEDULE		
LABEL	TYPE	QTY
N1	TUBE SIDE INLET - 2" SANITARY FERRULE	1
N2	TUBE SIDE OUTLET - 2" SANITARY FERRULE	1
N3	SHELL SIDE INLET - 3" NPT 3000# COUPLING	1
N4	SHELL SIDE OUTLET - 1 1/2" NPT 3000# COUPLING	1
N5	SHELL SIDE VENT - 1" NPT 3000# COUPLING	1

PREPARED BY: D. PHILLIPS	DATE: 2/17/17	ENERQUIP
CHECKED: T. STEEN	DATE: 2/17/17	HEAT EXCHANGER
ENGINEER: S. Rhyner	DATE: 2.20.17	
6 NPS x 84 BEUB-3A-S		

SIZE	DRAWING NO.	REVISION
A	684O30C15C-31620T2-3A	0

WEIGHT 173.74 LBS. SHEET 1 OF 1