APPROVED FOR MANUFACTURE		
MWO	DATE	BY
PURCHASING ☐	RECEIVING ☐	SHOP ☐

REVISIONS			
NO	DESCRIPTION	DATE	BY

A3 NUMBER 12-07

HX01/HX02/HX10/HX18
HX1001/HX1002/HX1003
Quantity of 7

NEED DESIGN CALCULATIONS FOR EACH HEAT EXCHANGER

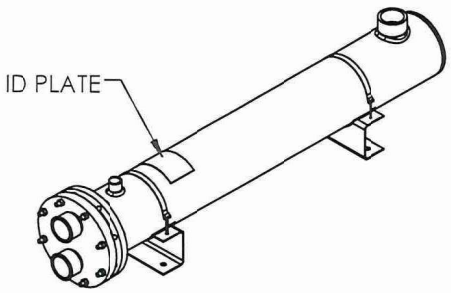

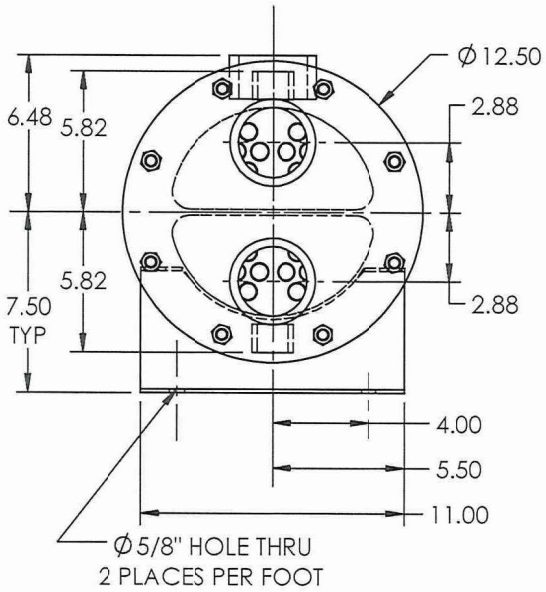

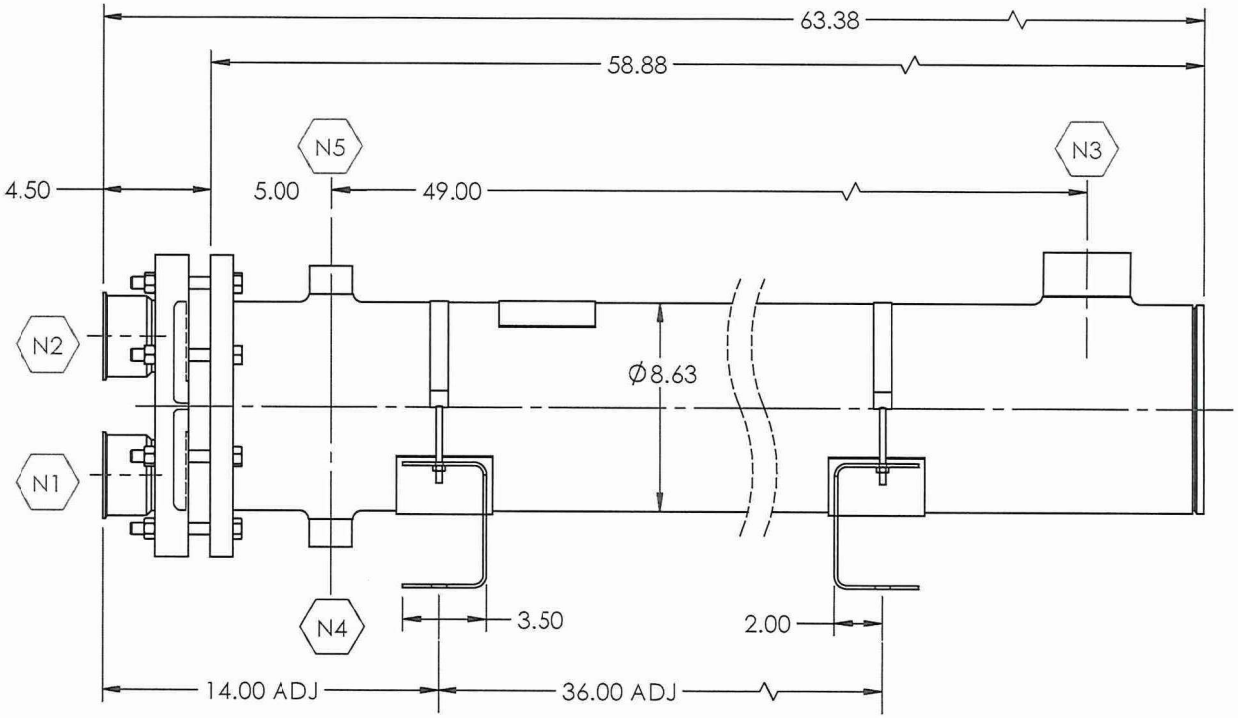

NB

XXXX
CERTIFIED BY: ENERQUIP, LLC
M.A.W.P.
SHELL SIDE: 150 PSIG @ 375 °F
TUBE SIDE: 150 PSIG @ 375 °F
MIN. DESIGN METAL TEMP.
SHELL SIDE: -20 °F @ 150 PSIG
TUBE SIDE: -20 °F @ 150 PSIG
SERIAL NO :
BUILT: CRN:
TAG NO:

U
W

PRODUCT CONTACT SURFACES SHALL MEET 3-A DAIRY STANDARD 12-07 FINISH REQUIREMENTS OF 32 Ra OR BETTER, INCLUDING SA-213 SEAMLESS TUBING.
EXTERIOR TO BE POLISHED TO APPROX. 40 Ra FINISH.
SHELL SIDE MATERIAL: 304L
TUBE SIDE MATERIAL: 316L
GASKET MATERIAL: EPDM

FOOT SUPPORTS SHOWN ARE INCLUDED

NOZZLE SCHEDULE		
LABEL	TYPE	QTY
N1	TUBE SIDE INLET - 3 SANITARY FERRULE	1
N2	TUBE SIDE OUTLET - 3 SANITARY FERRULE	1
N3	SHELL SIDE INLET - 2 1/2 NPT 3000# COUPLING	1
N4	SHELL SIDE OUTLET - 1 NPT 3000# COUPLING	1
N5	SHELL SIDE VENT - 1 NPT 3000# COUPLING	1

PREPARED BY: C. Hargot	DATE: 4/4/17	ENERQUIP	
CHECKED	DATE	HEAT EXCHANGER	
ENGINEER: T. Steen	DATE: 4/4/17		
8 NPS x 48 BEUB-3A-S		SIZE: A	DRAWING NO.: 848O25C10C-31630T2-3A
		REVISION: 0	
		215.31 LBS.	SHEET 1 OF 1