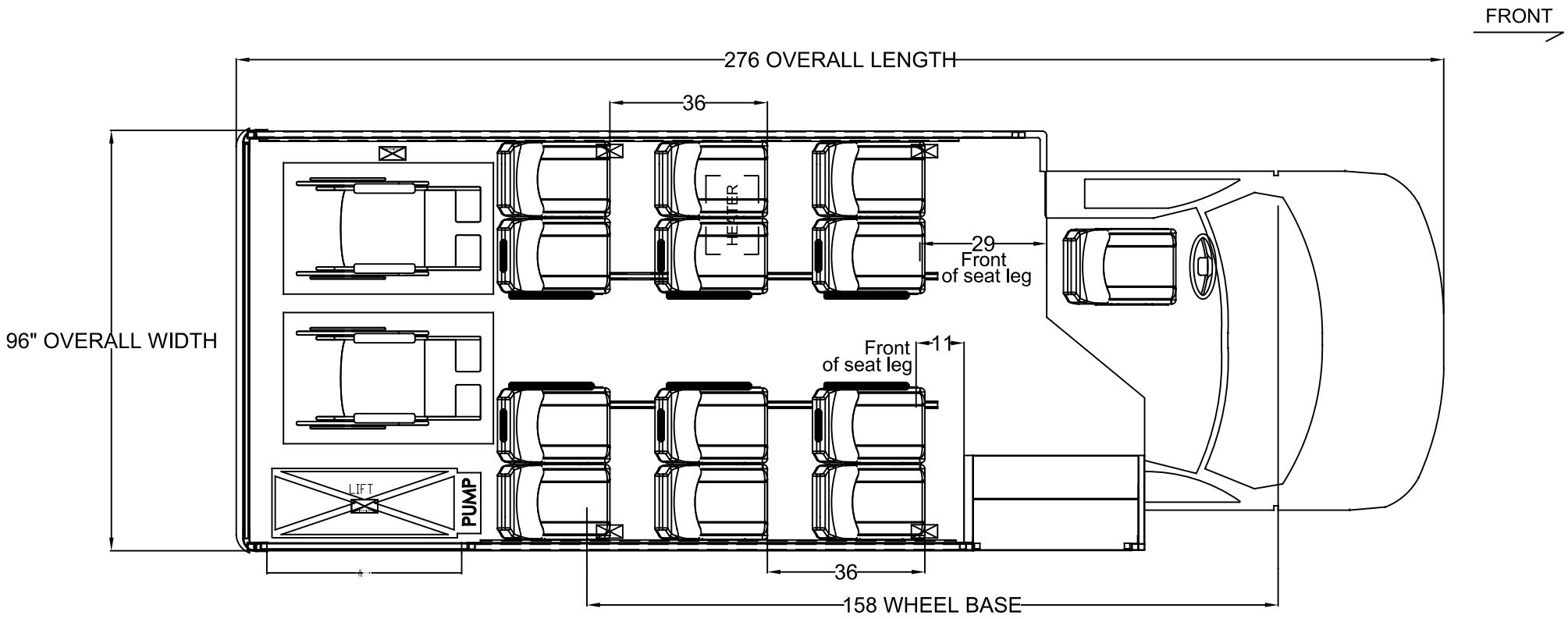

SALESPERSON	DEALER/COMPANY	CLIENT	COPYRIGHTED	DRAWING NUMBER	REV.
	TRUE PATH SPECIALTY VEHICLES LLC			FP RE-0001	

MAKE	FORD E-350 CHASSIS	MODEL	23' 12P - 2WC	DESCRIPTION	FORD ECONOLINE E-350 158"WB- 23' BODY 12&2