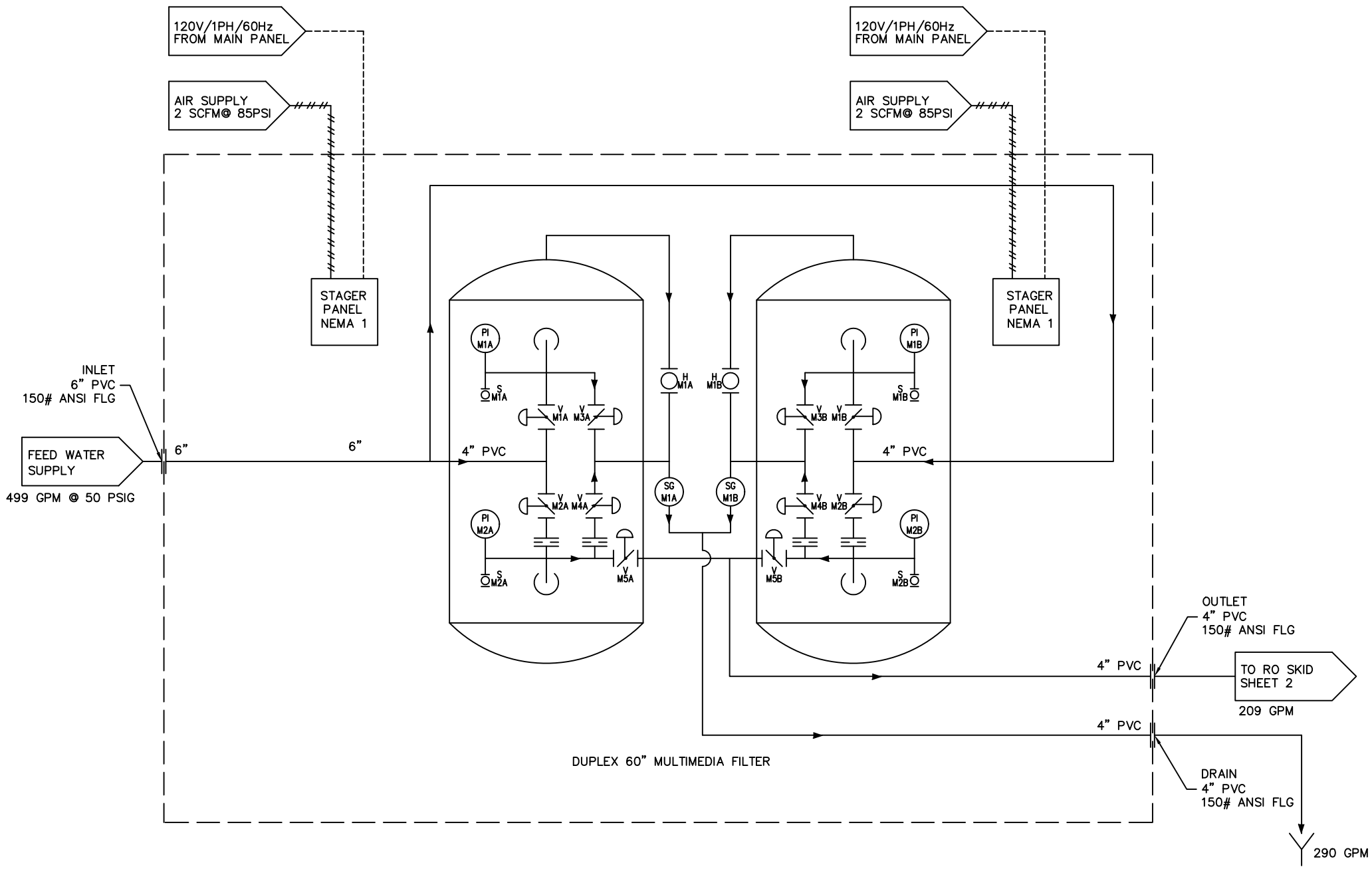

DWG. REV.	DESCRIPTION	DATE	DSGN	APPV'D
A	FIRST RELEASE	5/7/04	JG	

REF DWG: 73014

COMPANY CONFIDENTIAL

THIS DRAWING OR PRINT IS THE PROPERTY OF TENERGY CHRIST AND IS SUBJECT TO RETURN ON REQUEST. THE DESIGN CONCEPTS AND INFORMATION CONTAINED HEREIN ARE PROPRIETARY TO THAT CORPORATION AND IT'S SUBSIDIARIES AND ARE SUBMITTED IN CONFIDENCE. THEY ARE NOT TRANSFERABLE AND MUST BE USED ONLY FOR THE PURPOSE FOR WHICH THE PRINT IS EXPRESSLY LOANED. THEY MUST NOT BE DISCLOSED, OR REPRODUCED IN A MANNOR DETRIMENTAL TO THE INTERESTS OF TENERGY CHRIST. ALL PATENT RIGHTS ARE RESERVED UNLESS THEY ARE SPECIFICALLY ASSIGNED IN WRITING.

TENERGY CHRIST
Water Technology
255 MYRTLE STREET
NEW BRITAIN, CT.
PHONE 860 223-0623
FAX 860 223-0600

CUSTOMER: SCHWEITZER/MAUDUIT

TITLE: P&ID 150 GPM DEMINERALIZED WATER SYSTEM

SO NUMBER	PROJ ENG	ELEC ENG
04U202	PN	BM

SCALE	DATE	DRAWING NUMBER	SHEET NO.	DWG SIZE
NTS	5/7/04	73053	1 OF 3	D