Operation & Safety Manual

Original Instructions -
Keep this manual with the machine at all times.

520AJ HC3

PVC 2407

3122322900

July 15, 2024 - Rev A

ANSI ***AS/NZS GB***

English (en-US)

⚠ WARNING

Operating, servicing and maintaining this vehicle or equipment can expose you to chemicals including engine exhaust, carbon monoxide, phthalates, and lead, which are known to the State of California to cause cancer and birth defects or other reproductive harm. To minimize exposure, avoid breathing exhaust, do not idle the engine except as necessary, service your vehicle or equipment in a well-ventilated area and wear gloves or wash your hands frequently when servicing. For more information go to www.P65Warnings.ca.gov.

FOREWORD

The Mobile Elevating Work Platform (MEWP) models covered in this manual are designed and tested to meet or exceed various compliance standards. Please refer to the manufacturer's nameplate affixed to the subject MEWP for specific standard compliance information.

This manual is a very important tool! Keep it with the machine at all times.

The purpose of this manual is to provide owners, users, operators, lessors, and lessees with the precautions and operating procedures essential for the safe and proper machine operation for its intended purpose.

Due to continuous product improvements, JLG Industries, Inc. reserves the right to make specification changes without prior notification. Contact JLG Industries, Inc. for updated information.

Refer to www. JLG. com for Warranty, Product Registration, and other machine-related documentation.

SAFETY ALERT SYMBOLS AND SAFETY SIGNAL WORDS



This is the Safety Alert Symbol. It is used to alert you to the potential personal injury hazards. Obey all safety messages that follow this symbol to avoid possible injury or death.

⚠ DANGER

Indicates an imminently hazardous situation. If not avoided, will result in serious injury or death. This decal will have a red background.

⚠ WARNING

Indicates a potentially hazardous situation. If not avoided, could result in serious injury or death. This decal will have an orange background.

⚠ CAUTION

Indicates a potentially hazardous situation. If not avoided, may result in minor or moderate injury. It may also alert against unsafe practices. This decal will have a yellow background.

NOTICE

Indicates information or a company policy that relates directly or indirectly to the safety of personnel or protection of property.

⚠ WARNING

This product must comply with all safety related bulletins. Contact JLG Industries, Inc. or the local authorized JLG representative for information regarding safety related bulletins which may have been issued for this product.

NOTICE

JLG Industries, Inc. sends safety related bulletins to the owner of record of this machine. Contact JLG Industries, Inc. to ensure that the current owner records are updated and accurate.

NOTICE

JLG Industries, Inc. must be notified immediately in all instances where JLG products have been involved in an accident involving bodily injury or death or when substantial damage has occurred to personal property or the JLG product.

For:

- Accident Reporting
- Product Safety Publications
- Current Owner Updates
- Questions Regarding Product Safety
- Standards and Regulations Compliance Information
- Questions Regarding Special Product Applications
- Questions Regarding Product Modifications

Contact:

Product Safety and Reliability Department
JLG Industries, Inc.
13224 Fountainhead Plaza
Hagerstown, MD 21742
USA
or Visit www.jlg.com to find your local JLG office.

In USA:

Toll Free: 877-JLG-SAFE (877-554-7233)

Outside USA:

Phone: 240-420-2661
Fax: 301-745-3713
E-mail: ProductSafety@JLG.com

REVISION LOG

DATE	REVISION	DESCRIPTION
July 15, 2024	A	Original Issue

Other Publications Available

Publication	Publication Number
Service & Maintenance Manual	31223230
Illustrated Parts Manual	31223231

This Page is intentionally left blank

SECTION CONTENTS

Section	Subject	Page

FOREWORD **3**

REVISION LOG **7**

SECTION 1
SAFETY PRECAUTIONS **13**

1.1 General 13
1.2 Pre-Operation 13
1.3 Operation 15
1.4 Towing, Lifting, and Hauling 21
1.5 Maintenance 21

SECTION 2
USER RESPONSIBILITIES, MACHINE PREPARATION, AND INSPECTION **25**

2.1 Personnel Training 25
2.2 Preparation, Inspection, and Maintenance 26
2.3 Machine Components 28
2.4 Pre-Start Inspection 28
2.5 Walk-Around Inspection 30
2.6 Function Check 31
2.7 SkyGuard® Function Check 32
2.8 Oscillating Axle Lockout Test 33

SECTION 3
MACHINE CONTROLS AND INDICATORS **35**

3.1 General 35
3.2 Controls and Indicators 35
3.3 Ground Control Station 36
3.4 Ground Control Indicator Panel 42
3.5 Platform Control Station 44
3.6 Platform Control Indicator Panel 47
3.7 Beacons 50

SECTION 4
MACHINE OPERATION 51

4.1 General 51
4.2 Operating Characteristics and Limitations 51
4.3 Stability 52
4.4 520AJ HC3 Reach Chart 54
4.5 Engine Operation 54
4.6 Fuel Reserve / Shut-Off System 58
4.7 Diesel Particulate Filter (If Equipped) 58
4.8 Traveling (Driving) 59
4.9 Traveling (Grade/Side Slope) 60
4.10 Steering 61
4.11 Platform 62
4.12 Boom 63
4.13 Function Speed Control 64
4.14 USB Charging Port 64
4.15 ClearSky Smart Fleet™ 65
4.16 Access Control - ClearSky Smart Fleet™ (If Equipped) 65
4.17 Machine Safety System Override (MSSO) (If Equipped) 66
4.18 SkyGuard Activation/Deactivation 66
4.19 Shut Down and Park 68
4.20 Lifting and Tie Down 68
4.21 Lifting and Tie Down Chart 70
4.22 Safety Decal Locations 70

SECTION 5
EMERGENCY PROCEDURES 77

5.1 General 77
5.2 Incident Notification 77
5.3 Emergency Operation 77
5.4 Manual Swing Override 78
5.5 Emergency Towing Procedures 78
5.6 ClearSky Smart Fleet™ - Locked Out State 79
5.7 Machine Safety System Override (MSSO) (If Equipped) 80

SECTION 6
ACCESSORIES 81

6.1 Available Accessories and Relationship Table 81
6.2 Bolt-On External Fall Arrest 84
6.3 Cable Ladder Carrier 86
6.4 Pipe Racks 87
6.5 Platform Work Lights 89
6.6 Platform Work Surface 90
6.7 SkyGlazier® 91
6.8 SkyPower® 7.5 kW and Generator 4 kW 93
6.9 SkySense® 94
6.10 SkySense® Platform Bumper Padding 99
6.11 Soft Touch 99
6.12 Soft Touch (Work Load Capacity) 100

SECTION 7
GENERAL SPECIFICATIONS AND OPERATOR MAINTENANCE 101

7.1 General 101
7.2 Serial Number Location 101
7.3 Operating Specifications 101
7.4 Hydraulic Oil Specifications 104
7.5 Hydraulic Oil Operating Temperature Specifications 106
7.6 Deutz D2011 Engine Oil Operating Temperature Specifications 107
7.7 Deutz (T4F/Stage V) Engine Oil Operating Temperature Specifications 107
7.8 Operator Maintenance and Lubrication Diagram 108
7.9 Operator Maintenance 108
7.10 Tires and Wheels 115
7.11 Radio Frequency (RF) Information 118
7.12 Supplemental Information Only Applicable to CE/UKCA Machines 119
7.13 EC Declaration of Conformity 120
7.14 UKCA Declaration of Conformity 121

This Page is intentionally left blank

SECTION 1
Safety Precautions

1.1 GENERAL

This section outlines the necessary precautions for proper and safe machine usage and maintenance. It is mandatory that a daily routine is established based on the content of this manual to promote proper machine usage. A maintenance program, using the information provided in this manual and the Service & Maintenance Manual, must also be established by a qualified person and must be followed to ensure that the machine is safe to operate.

The owner/user/operator/lessor/lessee of the machine must not accept operating responsibility until this manual has been read, training is accomplished, and operation of the machine has been completed under the supervision of an experienced and qualified operator.

This section contains the responsibilities of the owner, user, operator, lessor, and lessee concerning safety, training, inspection, maintenance, application, and operation. If there are any questions with regard to safety, training, inspection, maintenance, application, and operation, please contact JLG Industries, Inc. (“JLG”).

⚠ WARNING

Failure to comply with the safety precautions listed in this manual could result in machine damage, property damage, personal injury or death.

1.2 PRE-OPERATION

1.2.1 Operator Training and Knowledge

- Read, understand, and study the Operation and Safety Manual in its entirety before operating the machine. For clarification, questions, or additional information regarding any portions of this manual, contact JLG Industries, Inc.

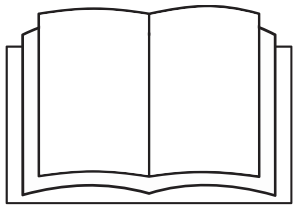

- Only personnel who have received proper training regarding the inspection, application and operation of MEWPs (including recognizing and avoiding hazards associated with their operation) shall be authorized to operate a MEWP.

- Only properly trained personnel who have received unit-specific familiarization shall operate a MEWP. The user shall determine if personnel are qualified to operate the MEWP prior to operation.
- Read, understand, and obey all DANGERS, WARNINGS, CAUTIONS, and operating instructions on the machine and in this manual.
- Ensure that the machine is to be used in a manner which is within the scope of its intended application as determined by JLG.
- All operating personnel must have a thorough understanding of the intended purpose and function of the MEWP controls, including platform, ground and emergency descent controls.
- Read, understand, and obey all applicable employer, local, and governmental regulations as they pertain to your utilization and application of the machine.

1.2.2 Workplace Inspection

- Precautions to avoid all hazards in the work area must be taken by the user before and during operation of the machine.
- Do not operate or raise the platform from a position on trucks, trailers, railway cars, floating vessels, scaffolds or other equipment unless the application is approved in writing by JLG.
- Before operation, check work area for overhead hazards such as electric lines, bridge cranes, and other potential overhead obstructions.
- Check operating surfaces for holes, bumps, drop-offs, obstructions, debris, concealed holes, and other potential hazards.
- Check the work area for hazardous locations. Do not operate the machine in hazardous environments unless approved for that purpose by JLG.
- Ensure that the ground conditions are adequate to support the maximum tire load indicated on the tire load decals located on the chassis adjacent to each wheel. Do not travel on unsupported surfaces.

1.2.3 Machine Inspection

- Do not operate this machine until the inspections and functional checks as specified in the User Responsibilities, Machine Preparation, and Inspection Section of this manual have been performed.
- Do not operate this machine until it has been serviced and maintained according to the maintenance and inspection requirements as specified in the machine's Service Manual.
- Ensure all safety devices are operating properly. Modification of these devices is a safety violation.

⚠ WARNING

Modification of a MEWP shall be made only with prior written permission from the manufacturer.

- Do not operate any machine on which the safety or instruction placards or decals are missing or illegible.
- Check the machine for modifications to original components. Ensure that any modifications have been approved by JLG.
- Avoid accumulation of debris on platform floor. Keep mud, oil, grease, and other slippery substances from footwear and platform floor.

1.3 OPERATION

1.3.1 General

- Machine operation requires your full attention. Bring the machine to a full stop before using any device, i.e. cell phones, two-way radios, etc. that will distract your attention from safely operating the machine.
- Do not use the machine for any purpose other than positioning personnel, their tools, and equipment.
- Before operation, the user must be familiar with the machine capabilities and operating characteristics of all functions.
- Never operate a malfunctioning machine. If a malfunction occurs, shut down the machine. Remove the unit from service and notify the proper authorities.
- Do not remove, modify, or disable any safety devices.
- Never slam a control switch or lever through neutral to an opposite direction. Always return switch to neutral and stop before moving the switch to the next function. Operate controls with slow and even pressure.
- Do not allow personnel to tamper with or operate the machine from the ground with personnel in the platform, except in an emergency.
- Do not carry materials directly on platform railing unless approved by JLG.
- When two or more persons are in the platform, the operator shall be responsible for all machine operations.
- Always ensure that power tools are properly stowed and never left hanging by their cord from the platform work area.
- When driving, always position boom over rear axle in line with the direction of travel. Remember, if boom is over the front axle, steer and drive functions will be reversed.
- Do not assist a stuck or disabled machine by pushing or pulling except by pulling at the chassis tie-down lugs.

- Fully lower platform and shut off all power before leaving machine.
- Remove all rings, watches, and jewelry when operating machine. Do not wear loose fitting clothing or long hair unrestrained which may become caught or entangled in equipment.
- Persons under the influence of drugs or alcohol or who are subject to seizures, dizziness or loss of physical control must not operate this machine.
- Hydraulic cylinders are subject to thermal expansion and contraction. This may result in changes to the platform position while the machine is stationary. Factors affecting thermal movement can include the length of time the machine will remain stationary, hydraulic oil temperature, ambient air temperature, and platform position.

1.3.2 Trip and Fall Hazards

- Before operating the machine, ensure all gates are closed and fastened in their proper position.

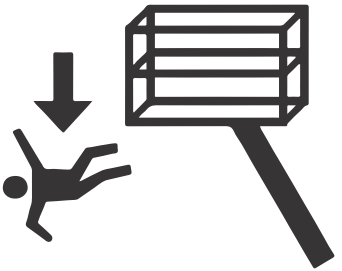

- During operation, occupants in the platform must wear a full body harness with a lanyard attached to an authorized lanyard anchorage point. Attach only one (1) lanyard per lanyard anchorage point.

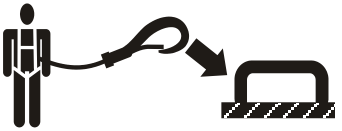

- Enter and exit only through gate area. Use extreme caution when entering or leaving platform. Ensure that the platform assembly is fully lowered. Face the platform when entering or leaving the platform. Always maintain “three point contact” with the machine, using two hands and one foot or two feet and one hand at all times during entry and exit.

- Keep both feet firmly positioned on the platform floor at all times. Never position ladders, boxes, steps, planks, or similar items on unit to provide additional reach for any purpose.
- Keep oil, mud, and slippery substances cleaned from footwear and the platform floor.

1.3.3 Electrocution Hazards

- This machine is not insulated and does not provide protection from contact with or proximity to electrical current.
- It is not recommended to use the machine during lightning. To prevent injury or machine damage if lightning occurs during operation, lower the boom and shut down the machine in a safe and secure location.

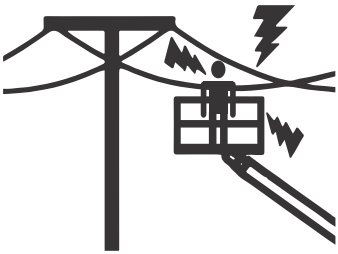

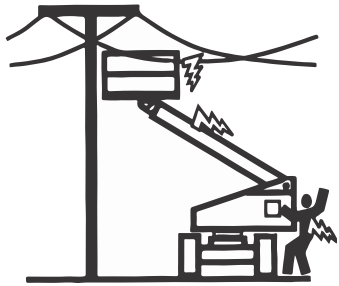

- Maintain distance from electrical lines, apparatus, or any energized (exposed or insulated) parts according to the Minimum Approach Distance (MAD) as shown in *Table — Minimum Approach Distances (MAD), page 17*.
- Allow for machine movement and electrical line swaying.

Table 1. Minimum Approach Distances (MAD)

Voltage Range (Phase to Phase)	Minimum Approach Distance in Feet (Meters)
0 to 50 KV	10 (3)
Over 50K V to 200 KV	15 (5)
Over 200 KV to 350 KV	20 (6)
Over 350 KV to 500 KV	25 (8)
Over 500 KV to 750 KV	35 (11)
Over 750 KV to 1000 KV	45 (14)
Note: This requirement shall apply except where employer, local or governmental regulations are more stringent.	

- Maintain a clearance of at least 10 ft (3m) between any part of the machine and its occupants, their tools, and their equipment from any electrical line or apparatus carrying up to 50,000 volts. One foot additional clearance is required for every additional 30,000 volts or less.
- The MAD may be reduced if insulating barriers are installed to prevent contact, and the barriers are rated for the voltage of the line being guarded. These barriers shall not be part of (or attached to) the machine.
- The MAD shall be reduced to a distance within the designed working dimensions of the insulating barrier. This determination shall be made by a qualified person with respect to electrical transmission and distribution in accordance with the employer, local, or governmental requirements for work practices near energized equipment.

⚠ DANGER

Do not maneuver machine or personnel inside prohibited zone (MAD). Assume all electrical parts and wiring are energized unless known otherwise.

1.3.4 Tipping Hazards

- Ensure that the ground conditions are adequate to support the maximum tire load indicated on the tire load decals located on the chassis adjacent to each wheel. Do not travel on unsupported surfaces.
- The user must be familiar with the operating surface before driving. Do not exceed the allowable side slope and grade while driving.

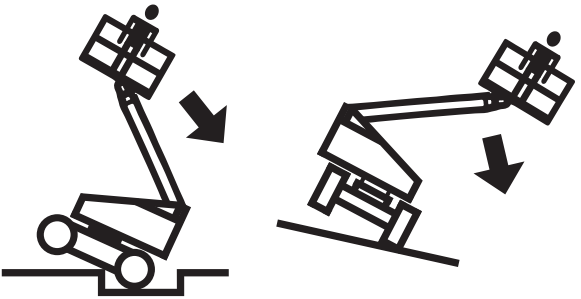

- Do not elevate platform or drive with platform elevated while on or near a sloping, uneven, or soft surface.
- Ensure machine is positioned on a smooth, firm surface within the limits of the maximum operating slope before elevating platform or driving with the platform in the elevated position.
- Before driving on floors, bridges, trucks, and other surfaces, check allowable capacity of the surfaces.
- Never exceed the maximum platform capacity as specified on the platform. Keep all loads within the confines of the platform, unless authorized by JLG.

- Keep the chassis of the machine a minimum of 2 ft (0.6m) from holes, bumps, drop-offs, obstructions, debris, concealed holes, and other potential hazards at the ground level.
- Do not push or pull any object with the boom.
- Never attempt to use the machine as a crane. Do not tie-off machine to any adjacent structure. Never attach wire, cable, or any similar items to platform.
- If boom assembly or platform is in a position that one or more wheels are off the ground, all persons must be removed before attempting to stabilize the machine. Use cranes, forklift trucks, or other appropriate equipment to stabilize machine.
- Do not operate the machine when wind conditions, including gusts, exceed 28 mph (12.5 m/s). Refer to *Table — Beaufort Scale (For Reference Only), page 20*. Factors affecting wind speed are; platform elevation, surrounding structures, local weather events, and approaching storms.
- Wind speed can be significantly greater at height than at ground level.
- Wind speed can change rapidly. Always consider approaching weather events, the time required to lower the platform, and methods to monitor current and potential wind conditions.
- Do not cover or increase surface area of the platform or the load. Do not carry large surface area items in the platform when operating outdoors. The addition of such items increases the exposed wind area of the machine. Increased areas exposed to wind will decrease stability.
- Do not increase the platform size with unauthorized modifications or attachments.

⚠ WARNING

Do not operate the machine when wind conditions exceed specifications shown in the General Specifications section of this manual or as shown on the capacity placard on the platform billboard.

Table 2. Beaufort Scale (For Reference Only)

Beaufort Number	Wind Speed		Description	Land Conditions
	mph	m/s		
0	0	0-0.2	Calm	Calm. Smoke rises vertically
1	1-3	0.3-1.5	Light air	Wind motion visible in smoke
2	4-7	1.6-3.3	Light breeze	Wind felt on exposed skin. Leaves rustle
3	8-12	3.4-5.4	Gentle breeze	Leaves and smaller twigs in constant motion
4	13-18	5.5-7.9	Moderate breeze	Dust and loose paper raised. Small branches begin to move.
5	19-24	8.0-10.7	Fresh breeze	Smaller trees sway.
6	25-31	10.8-13.8	Strong breeze	Large branches in motion. Flags waving near horizontal. Umbrella use becomes difficult.
7	32-38	13.9-17.1	Near Gale/ Moderate Gale	Whole trees in motion. Effort needed to walk against the wind.
8	39-46	17.2-20.7	Fresh Gale	Twigs broken from trees. Cars veer on road.
9	47-54	20.8-24.4	Strong Gale	Light structure damage.

1.3.5 Crushing and Collision Hazards

- Approved head gear must be worn by all operating and ground personnel.
- Watch for obstructions around machine and overhead when driving. Check clearances above, on sides, and bottom of platform during all operations.

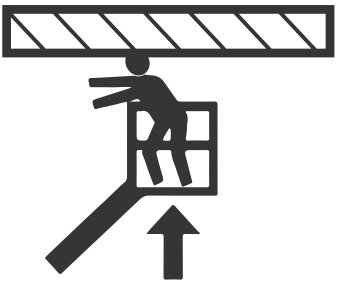

- During operation, keep all body parts inside platform railing.
- Use the boom functions, not the drive function, to position the platform close to obstacles.

- Always post a lookout when driving in areas where vision is obstructed.
- Keep non-operating personnel at least 6 ft (1.8 m) away from machine during all operations.
- Under all travel conditions, the operator must limit travel speed according to conditions of ground surface, congestion, visibility, slope, location of personnel, and other factors.
- Be aware of stopping distances in all drive speeds. When driving in high speed, reduce drive speed before stopping. Travel grades in low speed only.
- Do not use high speed drive in restricted or close quarters or when driving in reverse.
- Exercise extreme caution at all times to prevent obstacles from striking or interfering with operating controls and persons in the platform.
- Ensure that operators of other overhead and floor level machines are aware of the MEWP's presence. Disconnect power to overhead cranes. Barricade floor area if necessary.
- Do not operate over ground personnel. Warn personnel not to work, stand, or walk under a raised boom or platform. Position barricades on floor if necessary.

1.4 TOWING, LIFTING, AND HAULING

- Never allow personnel in platform while towing, lifting, or hauling.
- This machine should not be towed, except in the event of emergency, malfunction, power failure, or loading/unloading. Refer to the Emergency Procedures section of this manual for emergency towing procedures.
- Ensure boom is in the stowed position and, if equipped, the turntable locked prior to towing, lifting or hauling. The platform must be completely empty of tools.
- When lifting machine, lift only at designated areas of the machine. Lift the unit with equipment of adequate capacity.
- Refer to the Machine Operation section of this manual for lifting information.

1.5 MAINTENANCE

This sub-section contains general safety precautions which must be observed during maintenance of this machine. Additional precautions to be observed during machine maintenance are inserted at the appropriate points in this manual and in the Service and Maintenance Manual. It is of utmost importance that maintenance personnel pay strict attention to these precautions to avoid possible injury to personnel or damage to the machine or property. A maintenance program must be established by a qualified person and must be followed to ensure that the machine is safe.

1.5.1 Maintenance Hazards

- Shut off power to all controls and ensure that all moving parts are secured from inadvertent motion prior to performing any adjustments or repairs.
- Never work under an elevated platform until it has been fully lowered to the full down position, if possible, or otherwise supported and restrained from movement with appropriate safety props, blocking, or overhead supports.
- DO NOT attempt to repair or tighten any hydraulic hoses or fittings while the machine is powered on or when the hydraulic system is under pressure.
- Always relieve hydraulic pressure from all hydraulic circuits before loosening or removing hydraulic components.
- DO NOT use your hand to check for leaks. Use a piece of cardboard or paper to search for leaks. Wear gloves to help protect hands from spraying fluid.



- Use only replacement parts or components that are approved by JLG. To be considered approved, replacement parts or components must be identical or equivalent to original parts or components.
- Never attempt to move heavy parts without the aid of a mechanical device. Do not allow heavy objects to rest in an unstable position. Ensure adequate support is provided when raising components of the machine.
- Do not use machine as a ground for welding.
- When performing welding or metal cutting operations, precautions must be taken to protect the chassis from direct exposure to weld and metal cutting spatter.
- Do not refuel combustion engine-powered machines with the engine running.
- Use only approved non-flammable cleaning solvents.
- Do not replace items critical to stability, such as batteries or solid tires, with items of different weight or specification. Do not modify the MEWP in any way to affect stability.
- Refer to the Service & Maintenance Manual for the weights of critical stability items.

⚠ WARNING

Modification of a MEWP shall be made only with prior written permission from the manufacturer.

1.5.2 Battery Hazards

- Always disconnect batteries when servicing electrical components or when performing welding on the machine.
- Do not allow smoking, open flame, or sparks near battery during charging or servicing.
- Do not contact tools or other metal objects across the battery terminals.
- Always wear hand, eye, and face protection when servicing batteries. Ensure that battery acid does not come in contact with skin or clothing.

⚠ CAUTION

Battery fluid is highly corrosive. Avoid contact with skin and clothing at all times. Immediately rinse any contacted area with clean water and seek medical attention.

- Charge batteries only in a well ventilated area.
- Avoid overfilling the battery fluid level. Add distilled water to batteries only after the batteries are fully charged.

This Page is intentionally left blank

SECTION 2
User Responsibilities, Machine Preparation, and Inspection

2.1 PERSONNEL TRAINING

The Mobile Elevating Work Platform (MEWP) is a personnel handling device, so it is necessary that it be operated and maintained only by trained personnel.

2.1.1 Operator Training

Operator training must cover:

1. Reading and understanding the Operation and Safety Manual.
2. Thorough understanding of the intended purpose and function of the MEWP controls, including platform, ground, and emergency descent controls.
3. Control labels, instructions, and warnings on the machine.
4. Applicable regulations, standards, and safety rules.
5. Use of approved fall protection equipment.
6. Enough knowledge of the mechanical operation of the machine to recognize a malfunction or potential malfunction.
7. The safest means to operate the machine where overhead obstructions, other moving equipment, and obstacles, depressions, holes, and drop-offs exist.
8. Means to avoid the hazards of unprotected electrical conductors.
9. Selection of the appropriate MEWP and available options for the work to be performed considering specific job requirements, with involvement from the MEWP owner, user, and/ or supervisor.
10. The responsibility of the operator to ensure all platform occupants have a basic level of knowledge to work safely on the MEWP, and to inform them of applicable regulations, standards, and safety rules.
11. The requirement for familiarization in addition to training.

2.1.2 Training Supervision

Training must be delivered by a qualified person in an open area free of hazards until the trainee has demonstrated the ability to safely control and operate the machine.

2.1.3 Operator Responsibility

The operator must be instructed that they have the responsibility and authority to shut down the machine in case of a malfunction or other unsafe condition of either the machine or the job site.

2.1.4 Machine Familiarization

Note: Responsibilities for familiarization may vary by region.

Only properly trained personnel who have received unit-specific familiarization shall operate a MEWP. The user shall determine if personnel are qualified to operate the MEWP prior to operation. The user shall ensure that after familiarization, the operator operates the MEWP for a sufficient period of time to achieve proficiency. When authorized by the user, self-familiarization can be achieved, if authorized, by a properly trained operator reading, understanding and following the manufacturer's operator's manual.

Prior to user's authorization of an operator to use a specific model of MEWP, the user shall ensure the operator is familiarized on the following:

1. Location of the manual storage compartment and the requirement to ensure the required manual(s) are present on the MEWP;
2. Purpose and function of the machine controls and indicators at the platform and ground control stations;
3. Purpose, location, and function of the emergency controls;
4. Operating characteristics and limitations;
5. Features and devices;
6. Accessories and optional equipment.

2.2 PREPARATION, INSPECTION, AND MAINTENANCE

The following table covers machine inspections and maintenance required by JLG Industries, Inc. Consult local regulations for further requirements for MEWPs. The frequency of inspections and maintenance must be increased as necessary when the machine is used in a harsh or hostile environment, if the machine is used with increased frequency, or if the machine is used in a severe manner.

Table 3. Inspection and Maintenance Table

Type	Frequency	Primary Responsibility	Service Qualification	Reference
Pre-Start Inspection	Before using each day; or whenever there is an Operator change	User or Operator	User or Operator	Operation & Safety Manual
Pre-Delivery Inspection (See Note)	Before each sale, lease, or rental delivery	Owner, Dealer, or User	Qualified JLG Mechanic	Service & Maintenance Manual and applicable JLG inspection form
Frequent Inspection (See Note)	In service for 3 months or 150 hours, whichever comes first or Out of service for a period of more than 3 months or Purchased used	Owner, Dealer, or User	Qualified JLG Mechanic	Service & Maintenance Manual and applicable JLG inspection form
Annual Machine Inspection (See Note)	Annually, no later than 13 months from the date of prior inspection	Owner, Dealer, or User	Factory Trained Service Technician (Recommended)	Service & Maintenance Manual and applicable JLG inspection form
Preventive Maintenance	At intervals as specified in the Service & Maintenance Manual	Owner, Dealer, or User	Qualified JLG Mechanic	Service & Maintenance Manual
Note: Inspection forms are available from JLG. Use the Service & Maintenance Manual to perform inspections.				

NOTICE

JLG Industries, Inc. recognizes a factory trained service technician as a person who has successfully completed the JLG Service Training School for the specified JLG product model.

2.3 MACHINE COMPONENTS

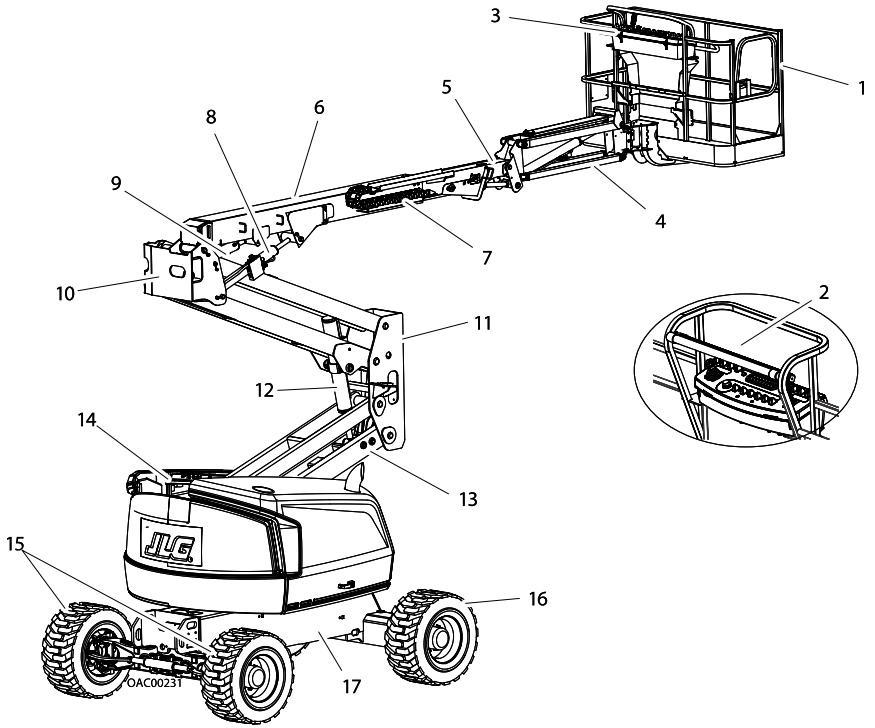

Figure 1. Basic Nomenclature

1. Platform
2. SkyGuard
3. Platform Control Console
4. Jib (If Equipped)
5. Fly Boom Section
6. Base Boom Section
7. Powertrack
8. Main Lift Cylinder
9. Master Cylinder
10. Upper Upright
11. Lower Upright
12. Tower Lift Cylinder
13. Tower Boom
14. Turntable
15. Front Drive/Steer Wheels
16. Rear Drive Wheels
17. Frame

2.4 PRE-START INSPECTION

The Pre-Start Inspection should include each of the following:

1. **Cleanliness** — Check all surfaces for leakage (oil, fuel, or battery fluid) or foreign objects. Report any leakage to the proper maintenance personnel.

2. **Structure** — Inspect the machine structure for dents, damage, weld or parent metal cracks or other discrepancies.

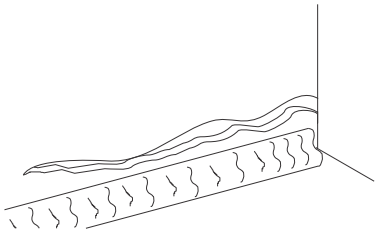

Figure 2. Parent Metal Crack

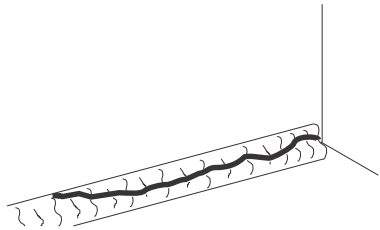

Figure 3. Weld Crack

3. **Decals and Placards** — Check all for cleanliness and legibility. Make sure none of the decals and placards are missing. Make sure all illegible decals and placards are cleaned or replaced.

4. **Operation and Safety Manuals** — Make sure a copy of the Operation & Safety Manual, AEM Safety Manual (ANSI markets only), and ANSI Manual of Responsibilities (ANSI markets only) are enclosed in the weather resistant storage container.

5. **Walk-Around Inspection** — Perform as instructed.

6. **Battery** — Charge as required.

7. **Fuel (Combustion Engine Powered Machines)** — Add the proper fuel as necessary.

8. **Engine Oil Supply** — Ensure the engine oil level is at the Full mark on the dipstick and the filler cap is secure.

9. **Hydraulic Oil** — Check the hydraulic oil level. Ensure hydraulic oil is added as required.

10. **Accessories/Attachments** — Refer to the Accessories section in this manual or accessory installed upon the machine for specific inspection, operation, and maintenance instructions.

11. **Function Check** — Once the Walk-Around Inspection is complete, perform a functional check of all systems in an area free of overhead and ground level obstructions. Refer to *Section — Machine Operation* for more specific instructions.

12. **Platform Gate** — Keep gate and surrounding area clean and unobstructed. Verify the gate closes properly and is not bent or damaged. Keep gate closed at all times except when entering/exiting the platform and loading/unloading materials.

13. **Lanyard Attach Points** — During operation, occupants in the platform must wear a full body harness with a lanyard attached to an authorized lanyard anchorage point. Attach only one (1) lanyard per lanyard anchorage point.

⚠ WARNING

If the machine does not operate properly, turn off the machine immediately! Report the problem to the proper maintenance personnel. Do not operate the machine until it is declared safe for operation.

2.5 WALK-AROUND INSPECTION

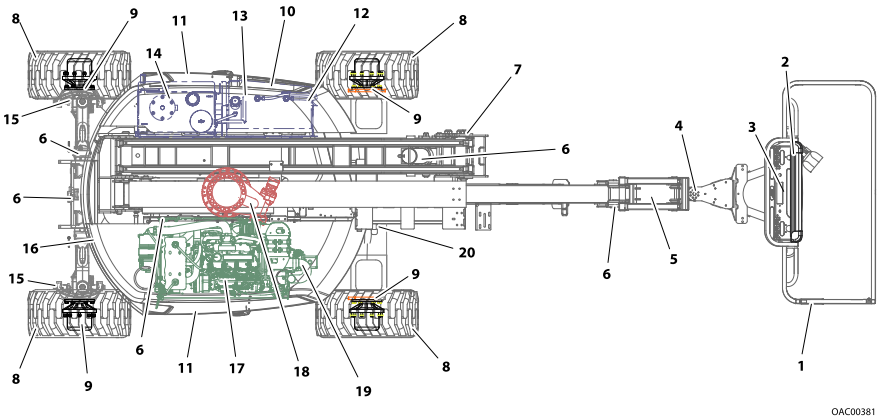

2.5.1 General

Begin the Walk-Around Inspection at Item 1, as noted on the diagram. Continue checking each item in sequence for the conditions listed in the following checklist.

⚠ WARNING

To avoid possible injury, be sure machine power is off. Do not operate machine until all malfunctions have been corrected.

NOTICE

Do not overlook visual inspection of chassis underside. Checking this area may result in discovery of conditions which could cause extensive machine damage.

INSPECTION NOTE: On all components, make sure there are no loose or missing parts, all parts are securely fastened, and no visible damage, leaks, or excessive wear exists in addition to any other criteria mentioned.

1. **Platform Assembly and Gate** - Footswitch works properly, not modified, disabled or blocked. Gate latches and hinges in working condition.

2. **SkyGuard** - See Inspection Note.
3. **Platform Control Console** - Switches and levers return to neutral when activated and released, decals/placards secure and legible, control markings legible.
4. **Platform Rotator** - See Inspection Note.
5. **Jib Assembly and Jib Rotator** - See Inspection Note.
6. **All Hydraulic Cylinders** - No visible damage; pivot pins and hydraulic hoses undamaged, not leaking.
7. **Boom Sections/Uprights/Turntable** - See Inspection Note.
8. **Wheel/Tire Assemblies** - Properly secured, no missing lug nuts. Inspect for worn tread, cuts, tears or other discrepancies. Inspect wheels for damage and corrosion.
9. **Drive Motor, Brake, and Hub** - No evidence of leakage
10. **Ground Control Console** - Switches and levers return to neutral when activated and released, decals/placards secure and legible, control markings legible.
11. **Hood Assemblies** - See Inspection Note.
12. **Fuel Tank** - See Inspection Note
13. **Turntable Bearing** - Evidence of proper lubrication. No evidence of loose bolts or looseness between bearing and machine.
14. **Hydraulic Reservoir** - See Inspection Note.
15. **Tie Rod Ends and Steering Spindles** - See Inspection Note
16. **Counterweight** - No evidence of damage.
17. **Engine** - See Inspection Note.
18. **Swing Motor and Worm Gear** - No evidence of damage.
19. **Hydraulic Pump** - See Inspection Note.
20. **Battery Compartment** - Batteries have proper electrolyte level; cables tight; no visible damage or corrosion.

2.6 FUNCTION CHECK

Perform the Function Check as follows:

1. From the ground control panel with no load in the platform:
    a. Ensure that all machine functions are disabled when the Emergency Stop Button is pushed in.
    b. Ensure all functions stop when the function switch is released.
    c. Operate all functions and check all limiting and cut-out switches to ensure proper operation.
    d. Check auxiliary power and ensure proper operation.
2. From the platform control console:
    a. Ensure that the control console is firmly secured in the proper location.
    b. Check that all guards protecting the switches or locks are in place.
    c. Ensure that all machine functions are disabled when the Emergency Stop Button is pushed in.
    d. Ensure that all machine functions stop when the footswitch is released.
    e. Operate all functions and check all limit and cutout switches to ensure proper operation.
3. With the platform in the transport (stowed) position:
    a. Drive the machine on a grade, not to exceed the rated gradeability, and stop to ensure the brakes hold.
    b. Check the tilt indicator is illuminated to ensure proper operation.
4. Swing the boom over either of the rear tires and ensure that the Drive Orientation indicator illuminates and the Drive Orientation Override switch must be used for the drive function to operate.
5. Place the machine in Transport Mode. Ensure the machine is positioned on a smooth, firm surface with tower boom down and fully retracted. Elevate the main boom beyond 5° horizontal. Drive the machine forward and ensure the drive speed is reduced while operating.

2.7 SKYGUARD® FUNCTION CHECK

From the Platform Control Station in an area free from obstructions:

1. Operate the telescope-out function.
2. Activate the **SkyGuard SkyLine®** sensor by pressing rod to break connection between the rod and the right bracket.

3. Once the sensor has been activated, verify the following conditions:
   a. Telescope-out function stops and telescope-in function operates for a short duration.
   b. The horn sounds.
   c. If equipped with a configured ClearSky CS550 or SkyGuard beacon, the beacon illuminates.

Note: If SkyGuard is enabled with the Soft Touch system, functions will cut out instead of reversing.

4. Release controls, reattach the rod to the right bracket and recycle the foot switch. Make sure normal operation is available.

If SkyGuard remains activated after function reversal or cutout, press and hold the SkyGuard Override Switch to allow normal use of machine functions until the sensor is deactivated.

Refer to the SkyGuard Activation/Deactivation section for additional information.

2.8 OSCILLATING AXLE LOCKOUT TEST

NOTICE

Lockout system test must be performed quarterly, any time a system component is replaced, or when improper system operation is suspected.

Note: Ensure boom is fully retracted, lowered, and centered between rear wheels prior to beginning lockout cylinder test.

1. Place a 6 inch (15.2 cm) high block with ascension ramp in front of left front wheel.
2. From platform control console, start engine.
3. Place the Drive control lever to the forward position and carefully drive machine up ascension ramp until left front wheel is on top of block.
4. Carefully activate Swing control lever and position boom over right side of machine or raise the main boom enough to get it out of the transport position.
5. Place Drive control lever to Reverse and drive machine off of block and ramp.
6. Have an assistant check to see that left front or right rear wheel remains elevated in position off of ground.
7. Carefully return boom to stowed position (centered between rear wheels if swung or fully lowered if raised). When boom reaches stowed position, lockout cylinders should release and allow wheel to rest on ground, it may be necessary to activate Drive to release cylinders.

8. Place the 6 inch (15.2 cm) high block with ascension ramp in front of right front wheel.
9. Place Drive control lever to Forward and carefully drive machine up ascension ramp until right front wheel is on top of block.
10. Repeat steps 4 thru 7 to check the opposite side of the oscillating axle.
11. If lockout cylinders do not function properly, have qualified personnel correct the malfunction prior to any further operation.

SECTION 3
Machine Controls and Indicators

3.1 GENERAL

NOTICE

The manufacturer has no direct control over machine application and operation. The user and operator are responsible for conforming with good safety practices.

This section provides the necessary information needed to understand control functions.

3.2 CONTROLS AND INDICATORS

Note: The indicator panels use different shaped symbols to alert the operator to different types of operational situations that could arise. The meaning of those symbols are explained below.



Indicates a potentially hazardous situation, which if not corrected, could result in serious injury or death. This indicator will be red.



Indicates an abnormal operating condition, which if not corrected, may result in machine interruption or damage. This indicator will be yellow.



Indicates important information regarding the operating condition, i.e. procedures essential for safe operation. This indicator will be green with the exception of the capacity indicator which will be yellow.

3.3 GROUND CONTROL STATION

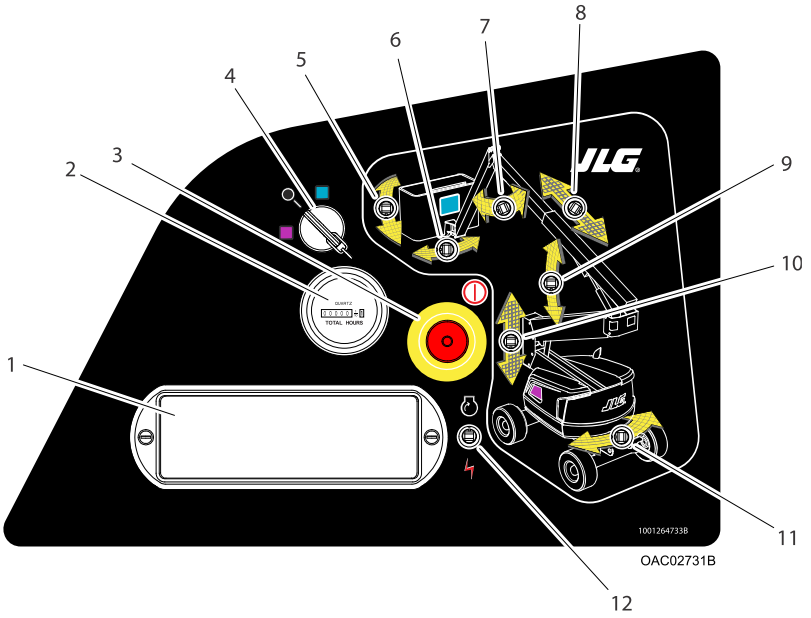

Ground Control Station without MSSO

1. Indicator Panel
2. Hourmeter
3. Power/Emergency Stop
4. Platform/Ground Select Switch
5. Platform Level
6. Platform Rotate
7. Jib Lift (If Equipped)
8. Telescope
9. Main Boom Lift
10. Tower Boom Lift
11. Swing
12. Engine Start/Auxiliary Power

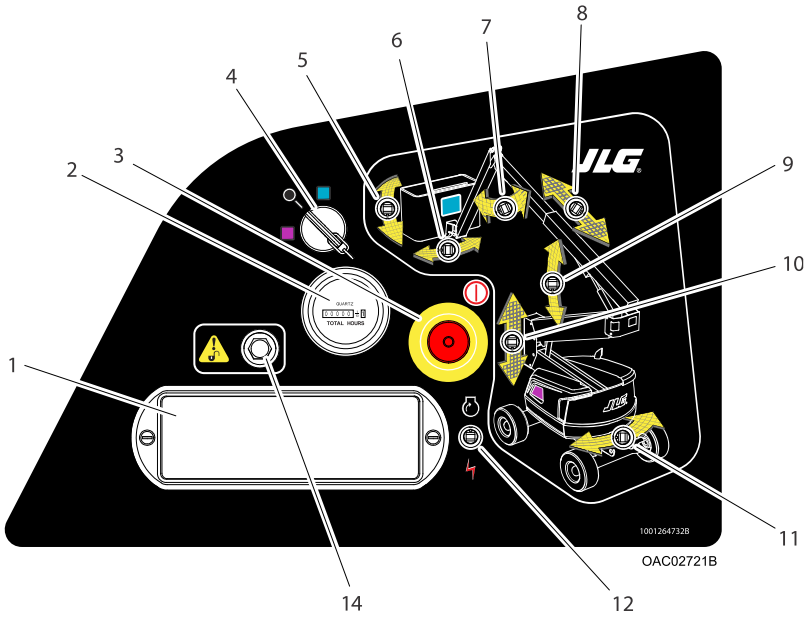

Ground Control Station with MSSO

1. Indicator Panel
2. Hourmeter
3. Power/Emergency Stop
4. Platform/Ground Select Switch
5. Platform Level
6. Platform Rotate
7. Jib Lift (If Equipped)
8. Telescope
9. Main Boom Lift
10. Tower Boom Lift
11. Swing
12. Engine Start/Auxiliary Power
13. Not Used
14. Machine Safety System Override (MSSO)

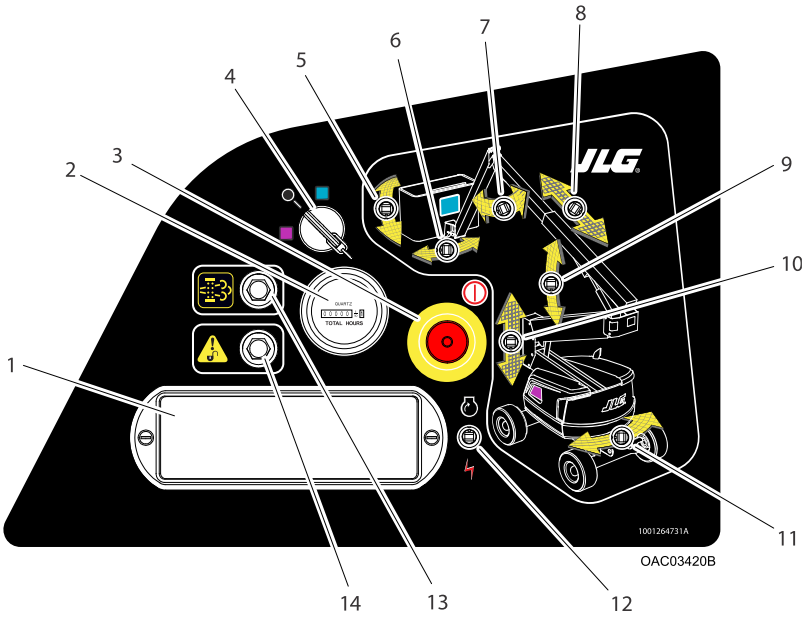

Ground Control Station with MSSO and DPF

1. Indicator Panel
2. Hourmeter
3. Power/Emergency Stop
4. Platform/Ground Select Switch
5. Platform Level
6. Platform Rotate
7. Jib Lift (If Equipped)
8. Telescope
9. Main Boom Lift
10. Tower Boom Lift
11. Swing
12. Engine Start/Auxiliary Power
13. Diesel Particulate Filter (DPF)
14. Machine Safety System Override (MSSO)

3.3.1 Ground Control Station Functions

⚠ WARNING

When operating the boom ensure there are no personnel around or under platform.

⚠ WARNING

To avoid serious injury, do not operate machine if any control levers or toggle switches controlling platform movement do not return to the off or neutral position when released.

Note: When machine is shut down the Platform/ Ground Select switch and Emergency Stop must be positioned to Off.
To operate machine from the platform, the Platform/Ground Select switch must be turned to the blue square.
To operate the machine from the ground, the Platform/Ground Select switch must be turned to the purple square.



Diesel Particulate Filter (DPF) (If Equipped)
This button initiates the standstill exhaust system cleaning.



Engine Start / Auxiliary Power Switch
To start the engine, the switch must be held up until the engine starts.



Note: When the glow plug indicator is illuminated on machines equipped with diesel engines, wait until the light goes out before cranking the engine.

To use auxiliary power, the switch must be held down for the duration of auxiliary pump use.



⚠ CAUTION

When operating on auxiliary power, do not operate more than one function at a time. Simultaneous operation can overload the auxiliary pump motor.

Hourmeter
Registers the amount of time the machine has been in use with the engine running. By connecting into the oil pressure circuit of the engine, only engine hours are recorded. The hourmeter registers up to 9,999.9 hours and cannot be reset.



Indicator Panel
The Indicator Panel contains indicator lights which signal problem conditions or functions operating during machine operation.



Jib Lift (If equipped)
Provides raising and lowering of the jib.



Machine Safety System Override (MSSO) (If Equipped)
Provides emergency override of function controls that are locked out in the event of Load Sense System activation.



Main Boom Lift
Provides raising and lowering of the main boom.



Main Boom Telescope
Provides extension and retraction of the main boom.



Platform Leveling Override Switch
A three position switch allows the operator to adjust the automatic self leveling system. This switch is used to adjust platform level in situations such as ascending/descending a grade.



⚠ WARNING

Only use the platform leveling override function for slight leveling of the platform. Incorrect use could cause the load/occupant to shift or fall. Failure to do so could result in death or serious injury.

Platform Rotate
Provides rotation of the platform.



Platform / Ground Select Switch
The three position, key operated switch supplies power to the platform control console when positioned to Platform. With the switch key turned to the Ground position only ground controls are operable.



Note: When the Platform/Ground Select Switch is in the center position, power is shut off to the controls at both operating stations. Remove the key to prevent the controls from being actuated.



Power / Emergency Stop Switch
A two-position red mushroom shaped switch supplies power to Platform/Ground Select switch when pulled out (On position). When pushed in (Off position), power is shut off to the Platform/Ground Select switch.



Note: When Power/Emergency Stop switch is in the On position and engine is not running, an alarm will sound, indicating the ignition power is On.

NOTICE

Always position emergency stop switch to the Off position (pushed in) when machine is not in use.

Swing
Provides 355 degrees non-continuous turntable rotation.



Tower Boom Lift
This switch provides raising and lowering of the tower boom.



3.4 GROUND CONTROL INDICATOR PANEL

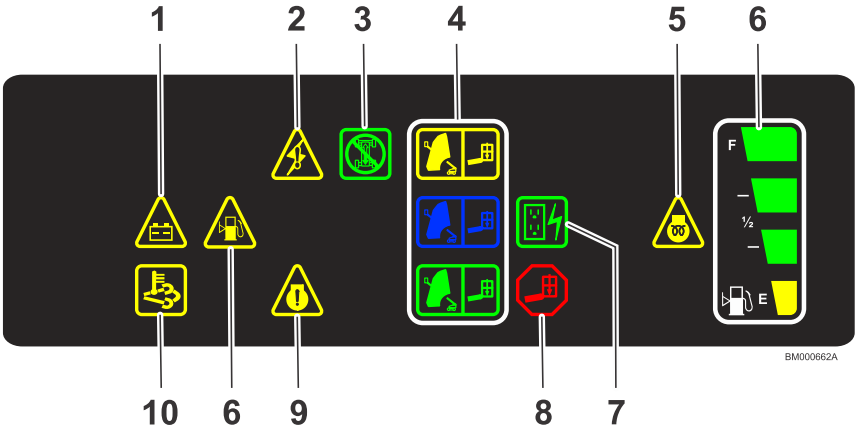

1. Battery Charge
2. System Distress
3. Drive and Steer Disable
4. Capacity Zone Indicator
5. Glow Plug
6. Fuel Indicator
7. AC Generator
8. Platform Overload
9. Engine Error
10. Emissions Temperature

3.4.1 Ground Control Indicator Panel Functions

AC Generator
Indicates the generator is in operation.



Battery Charge
Indicates a problem in the battery or charging circuit, and service is required.



Capacity Zone Indicator
Indicates the platform capacity zone for the current position of the platform. Restricted capacities are permitted at restricted platform positions (shorter boom lengths and higher boom angles).



Note: Refer to the capacity decals on the machine for restricted and unrestricted platform capacities.

Drive and Steer Disable
Indicates the Drive and Steer Disable function has been activated.



Emissions Temperature
Icon illuminates when the engine emissions control sensor reaches a high temperature.



Engine Error
Indicates a fault with the engine and service is required or is requesting a cleaning sequence.



Fuel Indicator*(2 Options)*

Fuel Level
Indicates the level of the fuel in the fuel tank.



Low Fuel Warning
Indicates the fuel in the fuel tank is low.



Glow Plug
Indicates the glow plugs are on. The glow plugs are automatically turned on with the ignition circuit and remain on for approximately seven seconds. Start the engine only after the light goes out.



Platform Overload
Indicates the platform has been overloaded.



System Distress
Indicates the JLG Control System has detected an abnormal condition and a Diagnostic Trouble Code has been set in the system memory. Refer to the Service Manual for instructions concerning the trouble codes and trouble code retrieval.
The system distress indicator light will illuminate for 2-3 seconds when the key is positioned to the On position to act as a self test.



3.5 PLATFORM CONTROL STATION

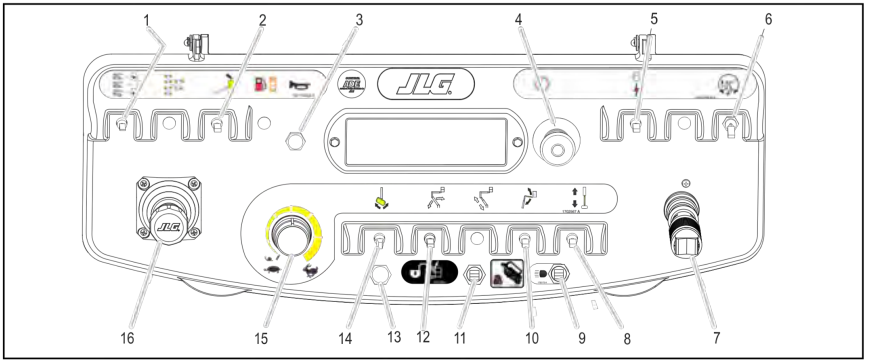

1. Drive Speed/Torque Select
2. Platform Level Override
3. Horn
4. Power / Emergency Stop
5. Engine Start/Auxiliary Power
6. Drive Orientation Override
7. Drive / Steer
8. Main Boom Telescope
9. Lights (If equipped)
10. Jib Lift (If equipped)
11. SkyGuard / SkySense Override
12. Tower Boom Lift
13. SkyGuard / SkySense Indicator
14. Platform Rotate
15. Function Speed Control
16. Main Lift / Swing

3.5.1 Platform Control Station Functions

⚠ WARNING

To avoid serious injury, do not operate machine if any control levers or toggle switches controlling platform movement do not return to the off or neutral position when released.

Drive Orientation Override



When the boom is swung over the rear tires or further in either direction, the Drive Orientation indicator will illuminate when the drive function is selected. Push and release the switch, and within 3 seconds move the Drive/Steer control to activate drive or steer. Before driving, locate the black/white orientation arrows on both the chassis and the platform controls. Move the drive controls in a direction matching the directional arrows for the intended direction of travel.

Note: Lift, Swing, and Drive control levers are spring-loaded and will automatically return to neutral (off) position when released.

Note: To operate the Drive joystick, pull up on the locking ring below the handle.



Note: The Drive joystick is spring loaded and will automatically return to neutral (off) position when released.

Drive Speed / Torque Select
The forward position gives maximum drive speed. The back position gives maximum torque for rough terrain and climbing grades. The center position allows the machine to be driven as quietly as possible.



⚠ CAUTION

Do not operate machine if drive speed /torque select switch operates when boom is above horizontal.

Drive / Steer
Push forward to drive forward, pull back to drive in reverse. Steering is accomplished via a thumb-activated rocker switch on the end of the steer handle.



Engine Start / Auxiliary Power
When pushed forward, the switch energizes the starter motor to start the engine.



The Auxiliary Power control switch energizes the electrically operated hydraulic pump. (Switch must be held on for duration of auxiliary pump use.)
The auxiliary pump functions to provide sufficient oil flow to operate the basic machine functions should the main pump or engine fail. The auxiliary pump will operate tower boom lift, tower telescope, main boom lift, main telescope and swing.



Function Speed Control
This control knob affects the speed of Telescope, Tower Lift, Jib Lift (if equipped), and Platform Rotate.



Note: During platform rotation, a speed difference may not be noticeable to the operator.

Turning the knob all the way counterclockwise until it clicks puts the machine into Creep Mode. Creep Mode puts the functions listed above, as well as Drive/Steer and Main Lift/ Swing functions into the slowest speed setting.

⚠ CAUTION

Do not operate machine if function speed switch operates when boom is above horizontal.

Horn
A push-type Horn switch supplies electrical power to an audible warning device when pressed.



Jib Lift (If equipped)
Provides raising and lowering of the jib.



Lights (If Equipped)
This switch operates the accessory lights package if the machine is so equipped.



Main Boom Telescope
Provides extension and retraction of the main boom.



Main Lift / Swing
Provides main lift and swing. Push forward to lift up, pull backward to boom down. Move right to swing right, move left to swing left.



Note: To operate the Main Boom Lift/Swing joystick, pull up on the locking ring below the handle.



Note: The Main Boom Lift/Swing joystick is spring loaded and will automatically return to neutral (Off) position when released.

⚠ WARNING

Only use the platform leveling override function for slight leveling of the platform. Incorrect use could cause the load/occupants to shift or fall. Failure to do so could result in death or serious injury.

Platform Level Override
A three position switch allows the operator to adjust the automatic self leveling system. This switch is used to adjust platform level in situations such as ascending/descending a grade.



Platform Rotate
Provides rotation of the platform.



Power / Emergency Stop
A two-position red mushroom shaped switch furnishes power to Platform Controls when pulled out (On). When pushed in (Off), power is shut off to the platform functions.



SkyGuard / SkySense Indicator
Indicates the SkyGuard sensor has been activated. All controls are cut out until the override button is pushed. Sky- Guard, controls will work normally. When SkyGuard is active, the indicator will flash, and the horn will sound continuously.
If machine is equipped with SkySense, the switch will mute the SkySense speakers.

SkyGuard / SkySense Override
For machines equipped with SkyGuard:
The SkyGuard override switch enables functions cut out by the SkyGuard system to be operated again, allowing the operator to resume use of machine functions.



For machines equipped with both SkyGuard and SkySense:
The switch operates like the SkyGuard override switch as described above. The switch also enables the functions cut out by the SkySense system to operate again at creep speed, allowing the operator to move the platform closer to the obstacle that caused the shutdown situation if desired.



Tower Lift
This switch provides for raising and lowering of the Tower Boom.



3.6 PLATFORM CONTROL INDICATOR PANEL

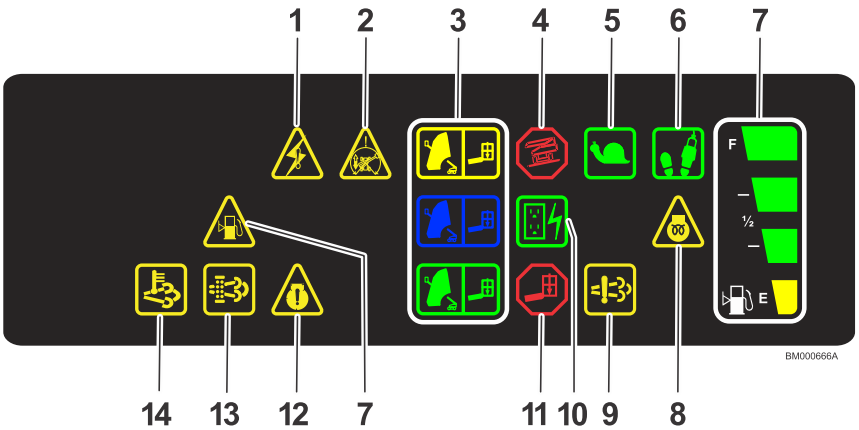

1. System Distress
2. Drive Orientation
3. Capacity Zone Indicator
4. Tilt Alarm / Warning
5. Creep Speed
6. Footswitch Enable
7. Fuel Indicator
8. Glow Plug
9. Engine Emissions System Failure
10. AC Generator
11. Platform Overload
12. Engine Error
13. Diesel Particulate Filter
14. Emissions Temperature

3.6.1 Platform Control Indicator Panel Functions

AC Generator
Indicates the generator is in operation.



Capacity Zone
Indicates the platform capacity zone for the current position of the platform. Restricted capacities are permitted at restricted platform positions (shorter boom lengths and higher boom angles).



Note: Refer to the capacity decals on the machine for restricted and unrestricted platform capacities.

Creep Speed
When the Function Speed Control is turned to the creep position, the indicator acts as a reminder that all functions are set to the slowest speed.



Diesel Particulate Filter
Icon will illuminate when standstill exhaust system cleaning is required.



Drive Orientation
When the boom is swung beyond the rear drive tires or further in either direction, the Drive Orientation indicator will illuminate when the drive function is selected. This is a signal for the operator to verify that the drive control is being operated in the proper direction (i.e. controls reversed situations).



Emissions Temperature
Icon illuminates when the engine emissions control sensor reaches a high temperature.



Engine Emissions System Failure
Icon illuminates when there is a fault with the Emissions After Treatment system.



Engine Error
Indicates a fault with the engine and service is required.



Footswitch Enable
To operate any function, the footswitch must be pressed down and the function selected within seven seconds. The enable indicator shows that the controls are enabled. If a function is not selected within seven seconds, or if a seven second lapse between ending one function and beginning the next function, the enable light will go out and the footswitch must be released and pressed again to enable the controls.
Releasing the footswitch removes power from all controls and applies the drive brakes.



⚠ WARNING

To avoid serious injury, do not remove, modify or disable the footswitch by blocking or any other means.

Fuel Indicator*(2 Options)*

Fuel Level
Indicates the level of the fuel in the fuel tank.



Low Fuel Warning
Indicates the fuel in the fuel tank is low.



Glow Plug
Indicates the glow plugs are operating. After turning on ignition, wait until light goes out before cranking engine.



System Distress
The light indicates that the JLG Control System has detected an abnormal condition and a Diagnostic Trouble Code has been set in the system memory. Refer to the Service Manual for instructions concerning the trouble codes and trouble code retrieval.



Tilt Warning Light and Alarm
This red illuminator indicates that the chassis is on a slope. If the boom is above horizontal and the machine is on a slope, the tilt alarm warning light will illuminate, an alarm will sound, available functions are placed in Creep speed, and drive is cut out in direction of travel. Drive in the opposite direction may be allowed under certain conditions.



⚠ WARNING

If tilt warning light is illuminated when boom is raised or extended, retract and lower to below horizontal then reposition machine so that it is within the limits of the maximum operating slope before extending boom or raising boom above horizontal.

Tilt Angle	Market
5°	All Markets

3.7 BEACONS

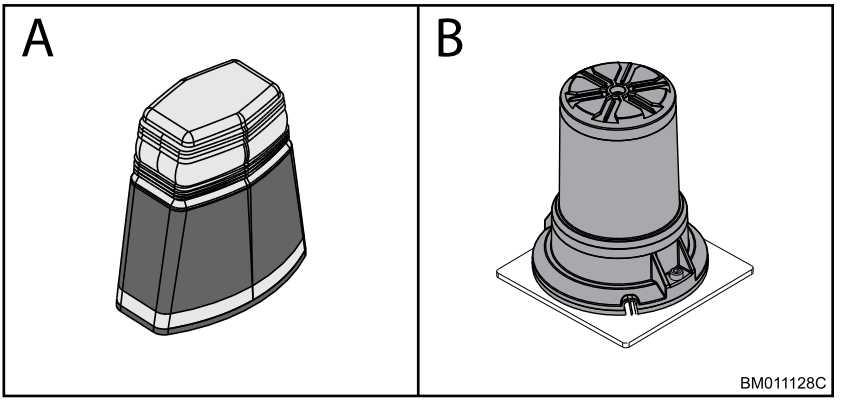

A. LED Motion / Amber Beacon (CS550) B. Beacon

Note: Image for reference only. Beacon design may vary based on beacon type, machine model and installation location.

3.7.1 ClearSky® LED Motion / Amber Beacon (CS550)

The ClearSky® CS550 is installed on ClearSky Smart Fleet™ equipped machines.

The CS550 can function as a machine beacon using multiple colors and flash patterns for communication and identification purposes. In addition to amber, colors include: red, blue, green, cyan, and white. The ClearSky Smart Fleet mobile app can command visual alerts or audible alarms to assist in machine identification. Where applicable, the CS550 can also be configured to function as a SkyGuard Beacon (see below).

The CS550 also functions as a visible connectivity point for ClearSky Smart Fleet. Refer to the ClearSky Smart Fleet section for more information.

3.7.2 Amber Beacon

This amber-colored beacon flashes in a consistent pattern to alert those nearby that the machine power is on. The device may also use different flash patterns to identify specific machine alerts.

3.7.3 Blue or Red SkyGuard® Beacon

The SkyGuard beacon is available in blue or red lamp options. The beacon will flash in conjunction with an audible alarm when the SkyGuard sensor is activated.

Refer to the SkyGuard Operation section for more information.

SECTION 4
Machine Operation

4.1 GENERAL

This machine is a Mobile Elevating Work Platform (MEWP) used to position personnel, along with their necessary tools and materials at work locations.

The primary operator control station is in the platform. From this control station, the operator can drive and steer the machine in both forward and reverse directions. The operator can raise or lower the main or tower boom or swing the boom to the left or right.

Standard boom swing is 355° non-continuous left and right of the stowed position. The machine has a Ground Control Station which will override the Platform Control Station. Ground Controls operate all functions except drive and steer. Except for performing inspections and the Function Check, the ground controls are to be used in an emergency to lower the platform to the ground should the operator in the platform be unable to do so.

4.2 OPERATING CHARACTERISTICS AND LIMITATIONS

4.2.1 Operating Conditions

The boom can be raised above horizontal with or without any load in platform, if:

1. Machine is positioned on a smooth, firm surface within the limits of the maximum operating slope.
2. Load is within manufacturer's rated capacity.
3. All machine systems are functioning properly.
4. Machine is as originally equipped from JLG.

4.2.2 Platform Load Sensing System (LSS)

The Platform Load Sensing System (LSS) measures platform load from a sensor in the platform support.

If the LSS senses an overload condition, the overload alarm will sound, the overload indicator will light up at both the platform control and the ground control stations, and all boom functions will be disabled. To regain boom control, reduce the load in the platform to not exceed the rated workload indicated on the capacity decal. If unable to resolve the overload condition, auxiliary power may be used to return the platform to a safe working condition. See Emergency Operation section.

4.2.3 Capacity Zones (Triple Capacity)

This machine is equipped with a Triple Capacity System with one unrestricted and two restricted capacity zones. The control system will light the applicable capacity zone indicator in both the platform control and the ground control stations based on the location of and load on the platform.

When platform load is equal to or less than 660 lb (299 kg ANSI/300 kg CE), the platform position is unrestricted within the full machine envelope boundary. When platform load is between 660 lb (299 kg ANSI/300 kg CE) and 750 lb (340 kg) the platform position is restricted within a smaller working envelope boundary. When platform load is between 750 lb (340 kg) and 1,000 lb (454 kg ANSI/450 kg CE) the platform position is further restricted to the smallest working envelope.

If the operator attempts to cross a boundary into a zone of lesser or no restriction with a greater load than allowed, the machine will stop at the boundary.

4.3 STABILITY

Machine stability is based on two positions which are called FORWARD and BACKWARD stability. The machine's position of least FORWARD stability is shown in *Section — Position of Least Forward Stability* , and its position of least BACKWARD stability is shown in *Section — Position of Least Backward Stability* .

⚠ WARNING

To avoid forward or backward tipping, do not overload machine or operate the machine beyond the limit of the maximum operating slope.

1. *Machine will tip over in this direction if overloaded or operated beyond the limits of the maximum operating slope.*
2. *Platform rotated 90 degrees.*
3. *Main boom fully elevated.*
4. *Tower boom fully elevated.*

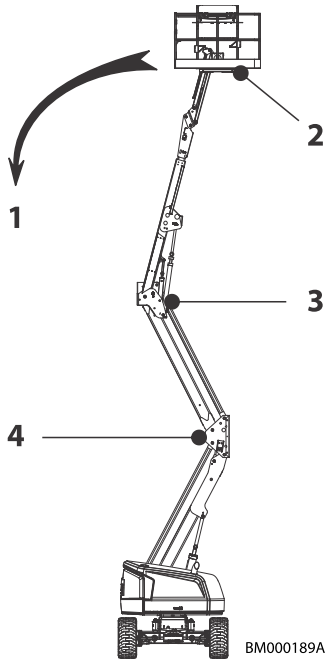

Figure 4. Position of Least Backward Stability

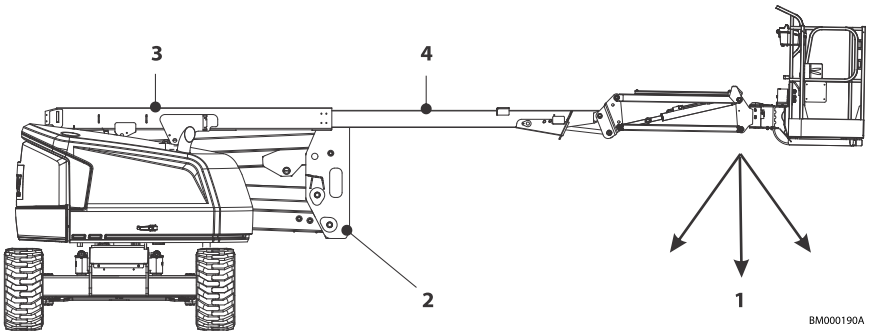

Figure 5. Position of Least Forward Stability

1. *Machine will tip over in this direction if overloaded or operated beyond the limits of the maximum operating slope.*
2. *Tower boom in stowed position.*
3. *Main boom and jib horizontal.*
4. *Telescope fully extended.*

4.4 520AJ HC3 REACH CHART

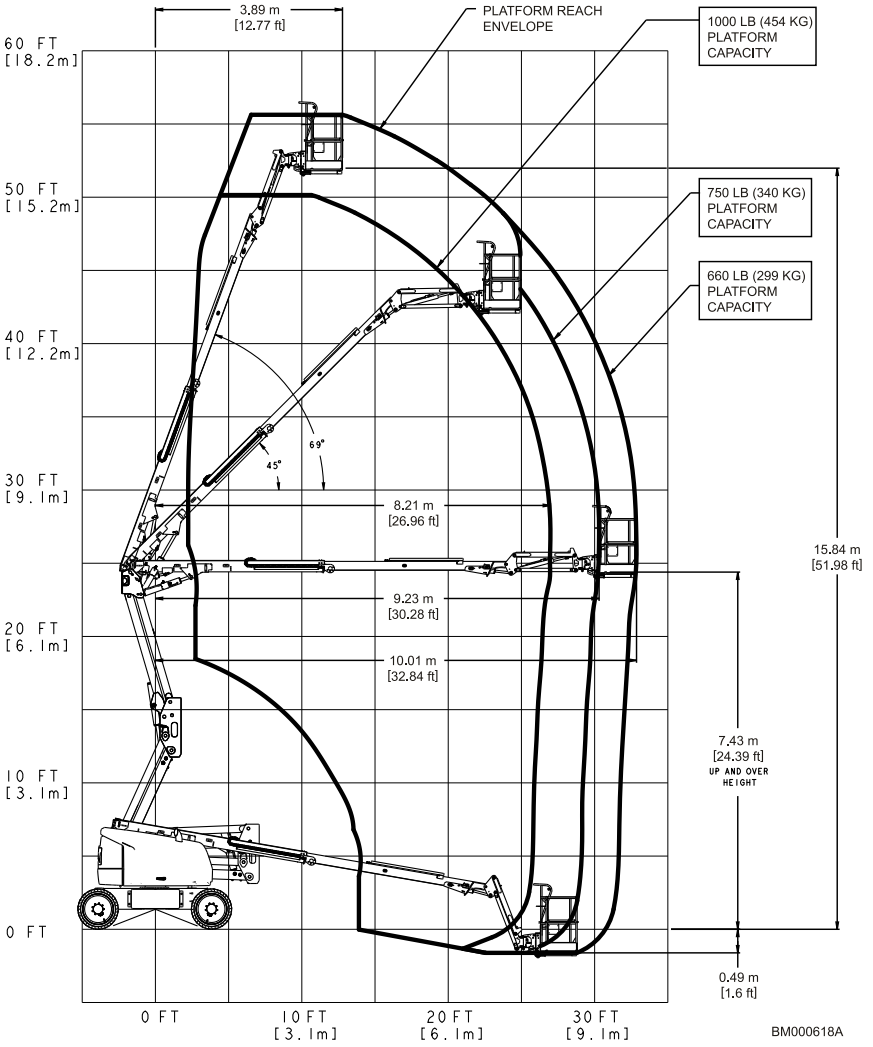

Figure 6. 520AJ HC3 Platform Reach Chart

4.5 ENGINE OPERATION

Note: When operating a machine at high altitudes, a decrease in machine performance may occur due to a decrease in air density.

Note: When operating a machine at high ambient temperatures, a decrease in machine performance and an increase in engine coolant temperature may occur.

Note: Avoid repeated, low intensity, or periodic machine operation and extended engine idle times in cold weather environments.

⚠ CAUTION

For every 8 hours of low intensity machine operation or extended engine idle time, drive the machine continuously for 15 minutes.

Note: Contact JLG Customer Service for operation under abnormal conditions.

4.5.1 Starting Procedure

Note: Initial starting should always be performed from the Ground Control station. Make sure to perform a ground control function check prior to platform operation.

⚠ CAUTION

If engine fails to start promptly, do not crank for an extended time. Should engine fail to start again, allow starter to cool off for 2-3 minutes. If engine fails after several attempts, refer to engine maintenance manual.

Note: Diesel engines only: After turning on ignition power, operator must wait until glow plug indicator light goes out before cranking engine.



1. Turn key of Platform/Ground Select switch to Ground.



2. Pull the Power/Emergency Stop switch to On.



3. Push the Engine Start switch until engine starts.



⚠ CAUTION

Allow engine to warm-up for a few minutes at low speed before applying any load.

4. After engine has had sufficient time to warm up, push in the Power/ Emergency Stop switch and shut engine off.



5. Turn Platform/Ground Select switch to Platform.



6. From Ground Control Console, pull Power/ Emergency Stop switch out.



7. From Platform, pull Power/Emergency Stop switch out.



8. Push the Engine Start switch until engine starts.



Note: Footswitch must be released in the up position before starter will operate. If starter operates with footswitch in the down position, do not operate the machine.

⚠ CAUTION

Do not idle or operate the engine under light load or no-load conditions for extended periods of time. Doing so may cause wet stacking, which may result in premature wear of engine or engine failure.

4.5.2 Shutdown Procedure

⚠ CAUTION

If an engine malfunction causes an unscheduled shutdown, determine the cause and correct it before restarting the engine.

1. Remove all load and allow engine to operate at low speed for 3-5 minutes; this allows further reduction of internal engine temperature.
2. Push Power/Emergency Stop switch in.



3. Turn Platform/Ground Select switch to Off.



Note: Refer to Engine Manufacturer's manual for detailed information.

4.6 FUEL RESERVE / SHUT-OFF SYSTEM

Note: Reference the Service and Maintenance Manual along with a qualified JLG Mechanic to verify your machine setup.

The Fuel Shutoff System monitors the fuel in the tank and senses when the fuel level is getting low. The JLG Control System automatically shuts the engine down before the fuel tank is emptied unless the machine is set up for Engine Restart.

If fuel level reaches the Empty range, the Low Fuel Indicator or remaining level of the Fuel Gauge will begin to flash once a second and there will be approximately 60 minutes of engine run time left. If the system is in this condition and automatically shuts down the engine or if the operator manually shuts down the engine before the 60 minute run time is complete, the Low Fuel Indicator or remaining level of the Fuel Gauge light will flash 10 times a second and the engine will react according to machine setup. Setup options are as follows:

- Engine One Restart - When the engine shuts down, the operator will be permitted to cycle power and restart the engine once with approximately 2 minutes of run time. After the 2 minute run time is complete or if the engine is shut down by the operator prior to the completion of the 2 minute run time, it cannot be restarted until fuel is added to the tank.
- Engine Restart - When the engine shuts down, the operator will be permitted to cycle power and restart the engine for approximately 2 minutes of run time. After the 2 minutes of run time is complete, the operator may cycle power and restart the engine for an additional 2 minutes of run time. The operator can repeat this process until there is no more fuel available.

NOTICE

Contact a qualified JLG mechanic if the machine needs restarted after no more fuel is available.

- Engine Stop - When the engine shuts down, no restarts will be permitted until fuel is added to the tank.

4.7 DIESEL PARTICULATE FILTER (IF EQUIPPED)

Diesel Particulate Filter (DPF) is an emissions control system used in diesel engines and requires operator interaction to ensure proper operation of the system.

For peak operation, the DPF system must be cleaned using one of two methods, Standstill Cleaning and Maintenance Standstill Cleaning. Standstill Cleaning is any cleaning requested by the engine outside of the regular maintenance window (for example, if the system detects excessive soot in the DPF canister). Maintenance Standstill Cleaning is cleaning requested by the engine on the regular maintenance interval.

Note: The system will reset the maintenance interval back to zero hours after Standstill or Maintenance Standstill Cleaning events are performed.

Note: For Standstill Cleaning procedures, please refer to the Service & Maintenance manual associated with this model.

4.8 TRAVELING (DRIVING)

Note: When the main boom is raised approximately 5 degrees above horizontal, the high drive function will automatically be in low drive.

⚠ WARNING

Do not drive with boom above horizontal except on a smooth, firm surface within the limits of the maximum operating slope.

Be sure the turntable lock (if equipped) is engaged before any extended traveling.

⚠ WARNING

Do not drive on side slopes which exceed 5 degrees.

To avoid loss of travel control or tip over, do not drive machine on grades exceeding those specified in the operating specifications section of this manual.

⚠ WARNING

Use extreme caution when driving in reverse and at all times when the platform is elevated.

Before driving, locate the black/white orientation arrows on both the chassis and the platform controls. Move the drive controls in a direction matching the directional arrows for the intended direction of travel.

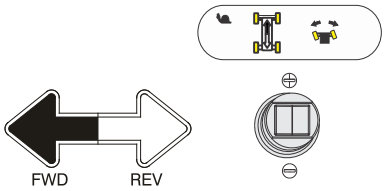

4.8.1 Traveling Forward and Reverse

1. At Platform Controls, pull out Emergency Stop switch, start engine, and activate footswitch.



2. Position Drive controller to Forward or Reverse as desired.

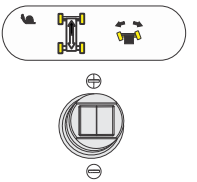

This machine is equipped with a Drive Orientation Indicator. The yellow light on the platform control console indicates that the boom is swung beyond the rear drive tires and the machine may Drive/Steer in the opposite direction from the movement of the controls. If the indicator is illuminated, operate the Drive function in the following manner:

1. Match the black and white direction arrows on both platform control panel and the chassis to determine the direction the machine will travel.

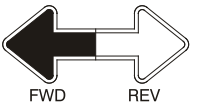

2. Push and release the Drive Orientation Override switch. Within 3 seconds, slowly move the Drive control toward the arrow matching the intended direction of machine travel. The indicator light will flash during the 3 second interval until the drive function is selected.



4.9 TRAVELING (GRADE/SIDE SLOPE)

See *Figure — Grade and Side Slope*

Note: Refer to the Operating Specifications table for gradeability and side slope ratings.

All ratings for gradeability and side slope are based upon the machine's boom being in the stowed position, fully lowered, and retracted.

Traveling is limited by two factors:

1. Gradeability, which is the percent of grade of the incline the machine can climb.
2. Side slope, which is the angle of the slope the machine can be driven across.

4.9.1 Traveling on a Grade

When traveling a grade, maximum braking and traction are obtained with the boom stowed, in position over the rear (drive) axle, and in line with the direction of travel. Drive the machine forward when climbing a grade, and in reverse when descending a grade. Do not exceed the machine's maximum rated gradeability.

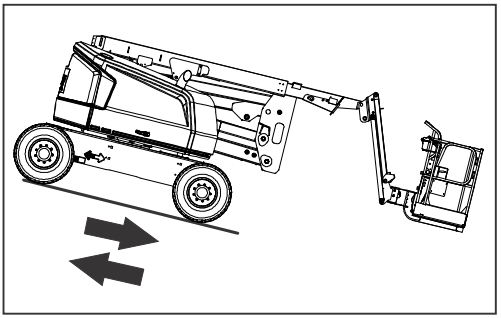

Figure 7. Traveling on a Grade

NOTICE

If the boom is over the front (steer) axle, direction of steer and drive movement will be opposite from the movement of the controls.

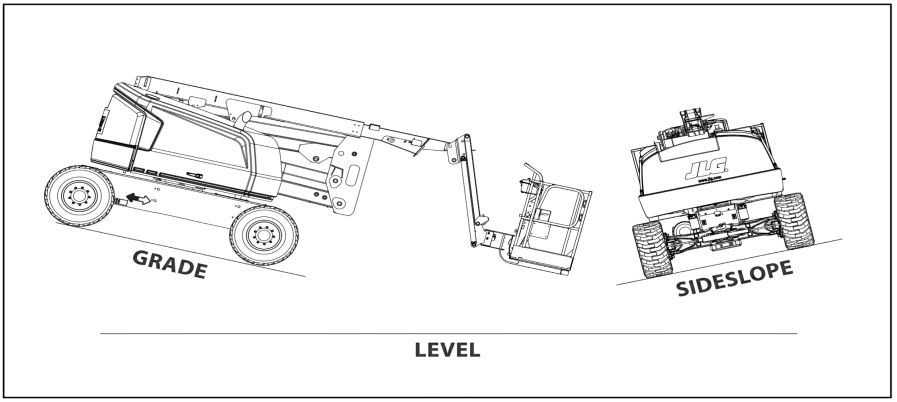

Figure 8. Grade and Side Slope

4.10 STEERING

Press footswitch. Position thumb switch on Drive/Steer controller to Right for steering right, or to Left for steering left.



4.11 PLATFORM

JLG offers multiple platform sizes to accommodate a variety of applications. Refer to the Illustrated Parts Manual for available platforms.

Not all platform options may be of adequate size to allow for the maximum number of rated occupants shown on the machine's capacity decal. The number of platform occupants may never exceed the number of available lanyard anchorage points. Attach only one (1) lanyard per lanyard anchorage point.

4.11.1 Platform Level Adjustment

⚠ WARNING

Only use the platform leveling override function for slight leveling of the platform. Incorrect use could cause the load/occupants to shift or fall. Failure to do so could result in death or serious injury.

During normal operation of the machine, the platform will automatically maintain its position. To manually level up or down, position the platform/level control switch up or down and hold until the platform is level.

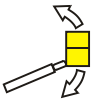

4.11.2 Platform Rotation

To rotate the platform to the left or right, use the platform rotate control switch to select the direction and hold until the desired position is reached.



4.12 BOOM

⚠ WARNING

A red tilt warning light is located on the control console which lights when the chassis is on an excessive slope. Do not swing or raise boom above horizontal when indicator is lit.

Do not depend on the tilt warning light as a level indicator for the chassis. The tilt warning light indicates chassis is on an excessive slope. Chassis must be level before swinging or raising boom above horizontal or driving with the boom elevated.

To avoid tip over if red tilt warning light lights when the boom is raised above horizontal, lower platform to ground level. Then reposition machine so that chassis is level before raising boom.

If the platform does not stop when a control switch or lever is released, remove foot from footswitch or use emergency stop switch to stop the machine.

⚠ WARNING

To avoid serious injury, do not operate machine if any control lever or toggle switch controlling platform movement does not return to the ‘off’ or neutral position when released.

⚠ CAUTION

To avoid a collision and injury if platform does not stop when a control switch or lever is released, remove foot from footswitch or use emergency stop switch to stop the machine.

4.12.1 Swinging the Boom

To swing boom, use Swing control switch to select Right or Left direction.



NOTICE

When swinging the boom make sure there is ample room for the boom to clear surrounding walls, partitions and equipment.

Note: On CE/UKCA Market machines, when boom functions are being operated there is an interlock that prevents the use of Drive and Steer functions.

4.12.2 Raising and Lowering the Tower Boom

To raise or lower the Tower Boom, position Tower Boom Lift switch to Up or Down until desired height is reached.

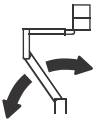

4.12.3 Raising and Lowering the Main Boom

To raise or lower the Main Boom, position the Main Boom Lift switch to Up or Down until the desired height is reached.



4.12.4 Telescoping the Main Boom

To extend or retract the main boom, use the Main Telescope Control Switch to select In or Out movement.

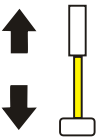

4.13 FUNCTION SPEED CONTROL

This control affects the speed of Telescope, Tower Boom Lift, Jib Lift, and Platform Rotate functions.

Note: During platform rotation, a speed difference may not be noticeable to the operator.



Turning the knob all the way counterclockwise until it clicks puts the machine into Creep Mode. Creep Mode puts the functions listed above, as well as the Drive/Steer and Main Lift/Swing functions into the slowest speed setting.

4.14 USB CHARGING PORT

The machine is equipped with a USB charging port for the operator.

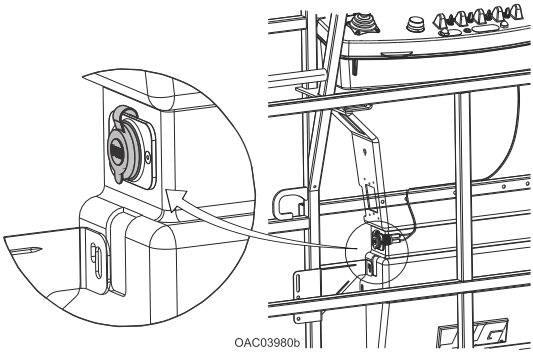

4.15 CLEARSKY SMART FLEET™

ClearSky Smart Fleet™ integrates on-machine hardware with web-based software and a mobile app to provide fleet management data and analytics. Personnel with the appropriate permissions can access telematics and machine identification data using a dashboard visible in the ClearSky Smart Fleet web portal or the ClearSky Smart Fleet mobile app. (Navigation and visual configuration may vary between the web portal or mobile app.)

Features include machine monitoring such as fuel level and battery charge, remote analyzer tasks including diagnostic trouble codes or system alerts, and access control (if available) restrictions.

Refer to the Access Control and Beacons sections of this manual for more information. Visit the ClearSky section of the JLG website for more resources and information about accessing web portal or mobile app data.

4.16 ACCESS CONTROL - CLEARSKY SMART FLEET™ (IF EQUIPPED)

NOTICE

Operator access to the machine may be placed into a restricted state remotely.

If a modification to a restricted state is required, contact the ClearSky Smart Fleet™ account owner. Only authorized personnel can make changes from within the web portal or mobile app.

This machine may be equipped with ClearSky Smart Fleet Access Control. Using the ClearSky Smart Fleet mobile app or web portal (remotely or locally), the machine can be placed into restricted states that limit machine functionality for all operators.

By using this machine, the operator acknowledges Access Control functionality, including restricted states, and accounts for it in their safe use plan.

Restricted states may include:

1. Speed Restricted — Machine is in Creep mode. See Operation section for more information on machine mode.
2. Speed and Function Restricted — Machine is in Creep mode and boom movement is restricted to transport position. In this state, once the boom reaches the transport position, it is not permitted to leave that defined position.
3. Locked Out — Machine has been locked out and will not operate (including engine start and auxiliary power, if applicable).

⚠ CAUTION

The Locked Out state will override the machine capability to use auxiliary power.

Note: Restricted functionality may occur if the CS550 (ClearSky® LED Motion / Amber Beacon) is damaged or removed. A protective cage is available through JLG.

Machines equipped with ClearSky Smart Fleet Access Control are also equipped with the CS550. Refer to the ClearSky Smart Fleet and Beacons sections of this manual for more information.

At time of publication, Access Control is not available for CE/UKCA markets.

4.17 MACHINE SAFETY SYSTEM OVERRIDE (MSSO) (IF EQUIPPED)

The Machine Safety System Override (MSSO) is used to override function controls for Emergency Platform Retrieval only. Refer to Emergency Procedures Section for Machine Safety System Override operating procedures (if equipped).



4.18 SKYGUARD ACTIVATION/DEACTIVATION

SkyGuard provides enhanced protection at the Platform Control Station. When the SkyGuard sensor is activated, functions in use at the time of actuation will reverse or cutout. See SkyGuard Function Table.

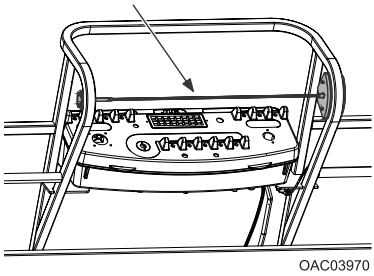

Figure 9. SkyGuard - SkyLine

To activate SkyGuard, the rod is pressed breaking the connection between the rod and right bracket.

During activation, the horn will sound and (if equipped and configured) a beacon will illuminate until sensor is reattached and footswitch is disengaged.

If SkyGuard activates inadvertently, release controls, reattach the rod to the right bracket and recycle the foot switch. Normal operation should resume.

If SkyGuard remains activated after rod reattachment, press and hold the SkyGuard Override Switch to allow functions to return the operator to the ground. Do not operate machine until the machine is inspected and any malfunctions are corrected.

Table 4. SkyGuard Function Table

Function	Reversal / Cutout
Drive Forward	R * / C **
Drive Reverse	R
Steer	C
Swing	R
Tower Lift Up	R
Tower Lift Down	C
Tower Telescope Out	C
Tower Telescope In	C
Boom Lift Up	R
Boom Lift Down	R
Boom Telescope Out	R
Boom Telescope In	C
Jib Lift (If equipped)	C
Platform Level	C

Table 4. SkyGuard Function Table (continued)

Function	Reversal / Cutout
Platform Rotate	C

R = Indicates Reversal is Activated; **C** = Indicates Cutout is Activated
* DOS (Drive Orientation System) Enabled
** DOS Not Enabled, machine is driving straight without steering, and any other hydraulic function is active
Note: If SkyGuard is enabled with the Soft Touch system, functions will cut out instead of reversing.

4.19 SHUT DOWN AND PARK

The preferred procedures to shut down and park the machine are as follows:

1. Drive machine to a reasonably well protected area.
2. Ensure boom is fully retracted and lowered over rear axle.
3. Shut down Emergency Stop at Platform Controls.
4. Shut down Emergency Stop at Ground Controls. Position Platform/Ground Select switch to center OFF (center position).
5. If necessary, cover Platform Controls to protect instruction placards, warning decals, and operating controls from hostile environment.

NOTICE

If parking a MEWP with the boom elevated in an effort to conserve space, booms may be elevated, but shall not be extended. It is the operator's responsibility to ensure all safety precautions in Section 1 of this manual are followed for each unique situation.

4.20 LIFTING AND TIE DOWN

4.20.1 Lifting

1. Refer to the Machine Serial Number Plate, call JLG Industries, or weigh the individual unit to find out the Gross Vehicle Weight.
2. Place the boom in the stowed position.
3. Remove all loose items from the machine.
4. Properly adjust the rigging to prevent damage to the machine and so the machine remains level.

4.20.2 Tie Down

NOTICE

When transporting the machine, the boom must be fully lowered into the boom rest.

1. Place the boom in the stowed position.
2. Remove all loose items from the machine.
3. Secure the chassis using straps or chains of adequate strength.
4. Ensure the platform is lowered so the wear pad on the bottom rests on the surface of the transportation vehicle.

Note: Secure through the tie downs on the boom using straps or chains of adequate strength.

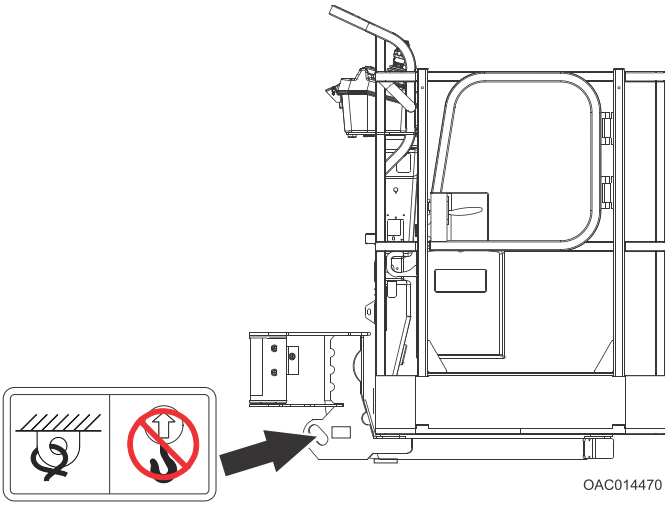

NOTICE

Secure turntable with turntable lock (if equipped) before traveling long distances or hauling machine on truck/trailer.

4.21 LIFTING AND TIE DOWN CHART

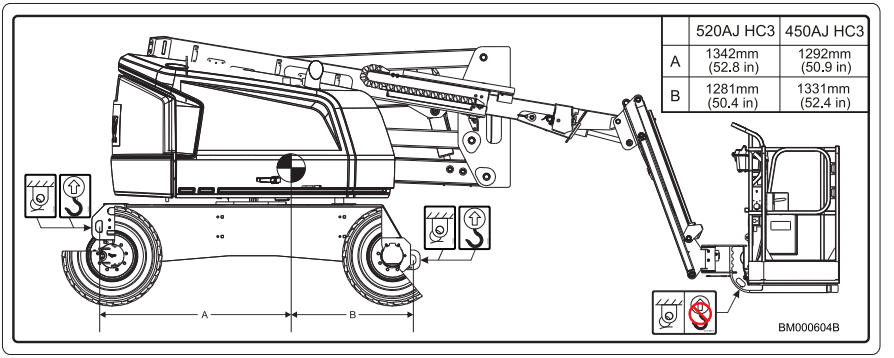

Figure 10. 450AJ HC3 / 520AJ HC3 Lifting Chart

4.22 SAFETY DECAL LOCATIONS

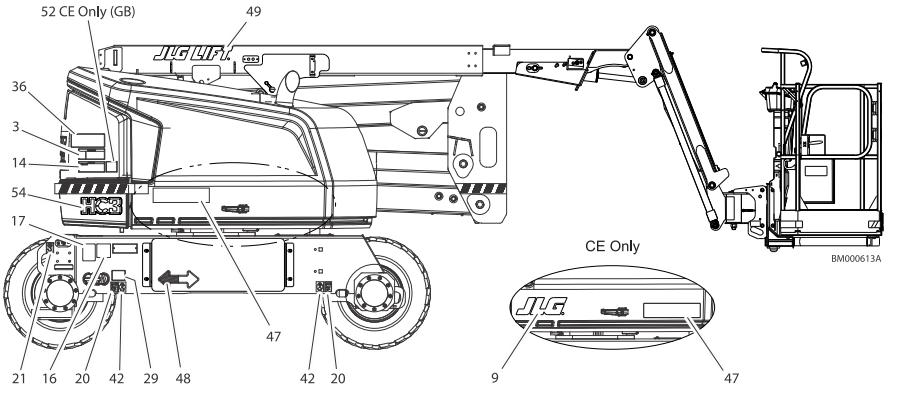

Figure 11. 520AJ HC3 Decal Installation - 1 of 5

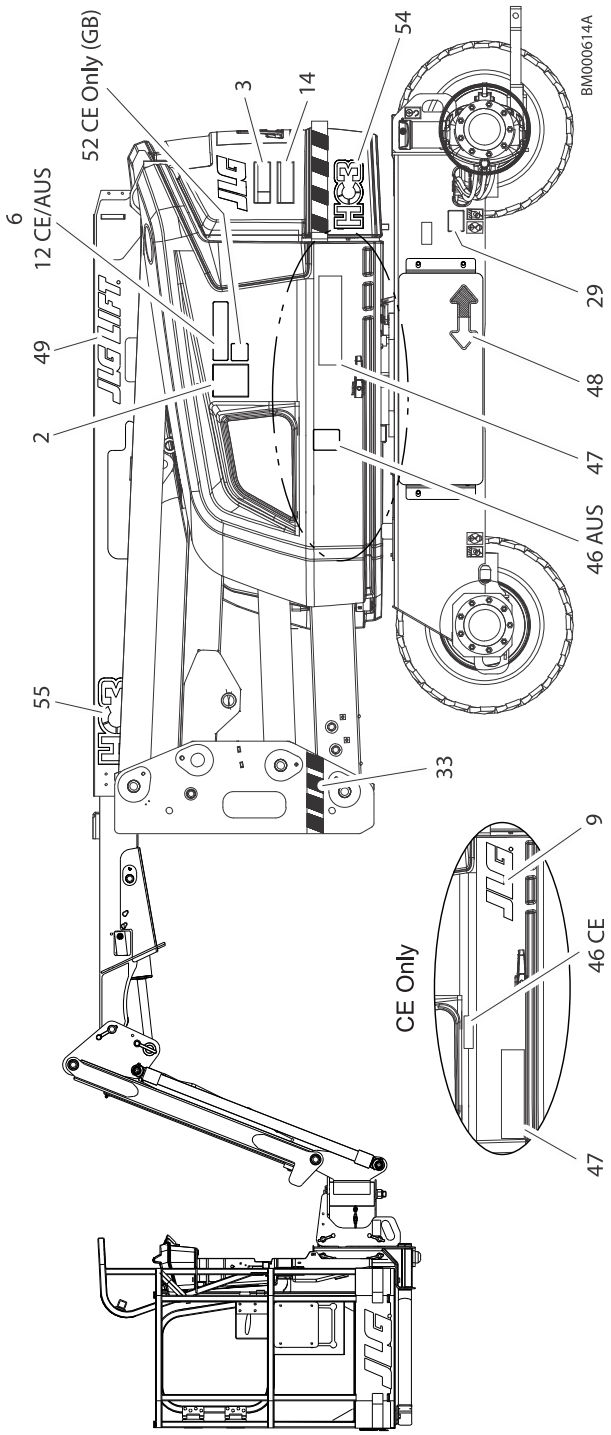

Figure 12. 520AJ HC3 Decal Installation - 2 of 5

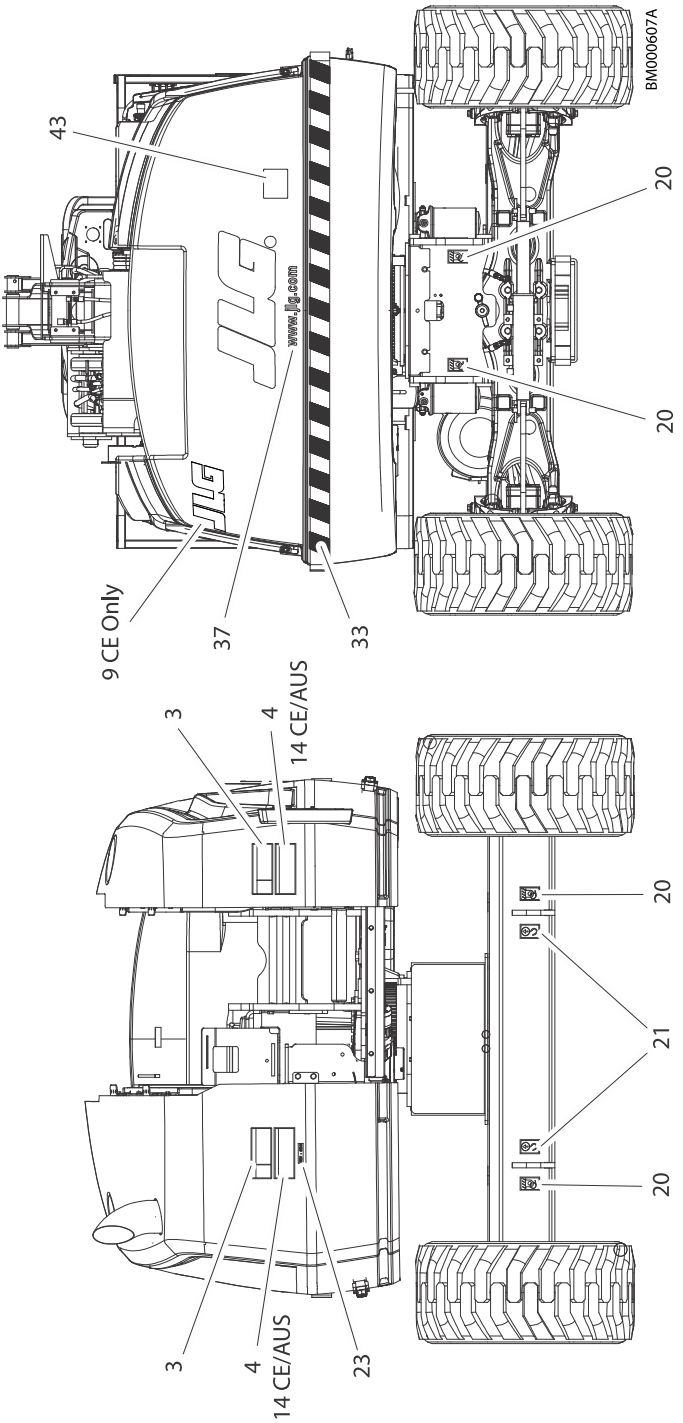

Figure 13. 520AJ HC3 Decal Installation - 3 of 5

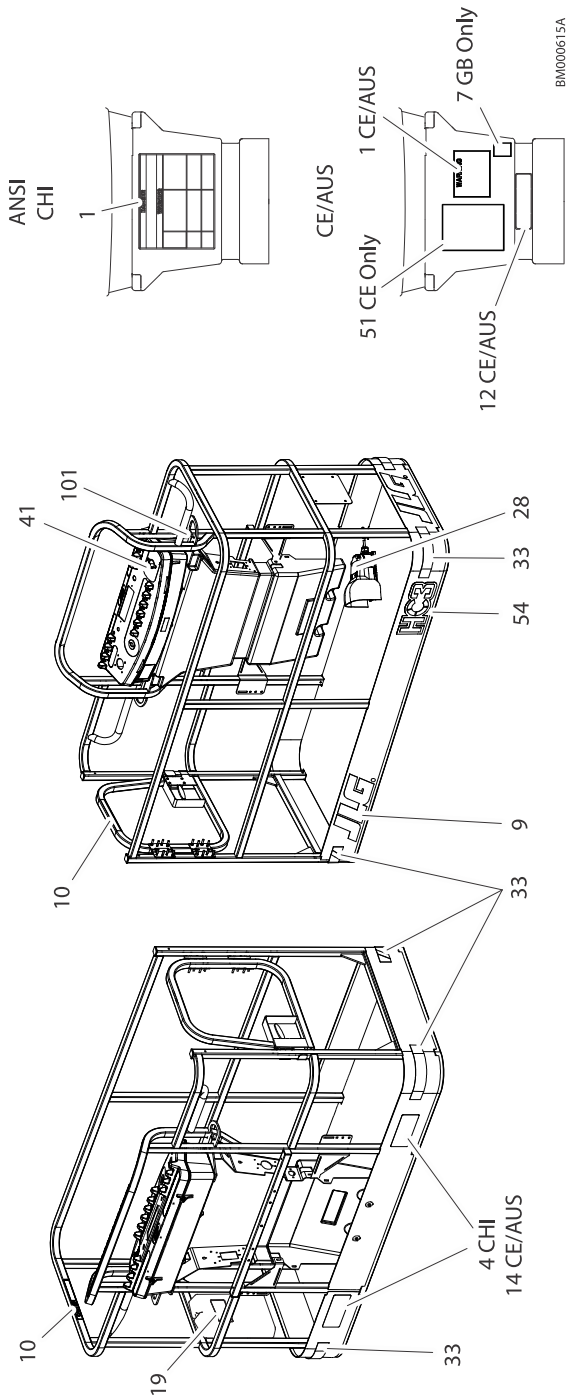

Figure 14. 520AJ HC3 Decal Installation - 4 of 5

Figure 15. 520AJ HC3 Decal Installation - 5 of 5

Table 5. 520AJ HC3 Decal Legend

Item #	CE/UKCA & GB 1001254307-B	Australia 1001254301-B	Chinese 1001254305-B
1	1001162429	1001162429	1703925
2	1705822	1705822	1001116849
3	1705961	1705961	1703937
4	- -	- -	1703949
5	- -	- -	1001256733
6	- -	- -	1001256734
7	1001244301 (GB)	- -	- -
9	1702773	1702773	1702773
10	- -	- -	1705968
12	1001256726	1001256726	- -
14	1701518	1701518	1703943
15	1701504	1701504	1701504
16	1702631	1702631	1702631
19	1701509	1701509	1701509
20	1702300	1702300	1702300
21	1701500	1701500	1701500
22	1703687	1703687	1703687
28	1705828	1705828	1703982
29	1001255849	1001255849	1001255849
33	4420051	4420051	4420051
35	1704412	1704412	1704412
36	1001172217	1001172217	1001172217
37	- -	1704885	1704885
41	- -	- -	1705430
42	1701499	1701499	1701499
43	1001204510/ 1001130492	1001204510	- -
46	1001189882	1001112551	- -
47	1001267310	1001267310	1001267310

Table 5. 520AJ HC3 Decal Legend (continued)

Item #	CE/UKCA & GB 1001254307-B	Australia 1001254301-B	Chinese 1001254305-B
48	1701529	1701529	1701529
49	- -	1701550	1701550
50	1001143852	1001143852	- -
51	1001181145	- -	1001224050
52	1001244298 (GB)	- -	- -
54	1001244212	1001244212	1001244212
55	1001256906	1001256906	1001256906
101	1704277	1704277	1704277

SECTION 5
Emergency Procedures

5.1 GENERAL

This section explains the steps to be taken in case of an emergency situation during operation.

5.2 INCIDENT NOTIFICATION

JLG Industries, Inc. must be notified immediately of any incident involving a JLG product. Even if no injury or property damage is evident, the factory should be contacted by telephone and provided with all necessary details.

- USA: 877-JLG-SAFE (554-7233)
- EUROPE: (32) 0 89 84 82 20
- AUSTRALIA: (61) 2 65 811111
- E-mail: ProductSafety@JLG.com

Failure to notify the manufacturer of an incident involving a JLG Industries product within 48 hours of such an occurrence may void any warranty consideration on that particular machine.

NOTICE

Following any incident, thoroughly inspect the machine and test all functions first from the ground controls, then from the platform controls. Do not lift above 3 m (10 ft.) until you are sure that all damage has been repaired, if required, and that all controls are operating correctly.

5.3 EMERGENCY OPERATION

5.3.1 Operator Unable to Control Machine

If the platform operator is pinned, trapped or unable to operate or control machine, do the following:

1. Other personnel should operate the machine from ground controls only as required.

2. Other qualified personnel on the platform may use the platform controls.

⚠ WARNING

Do not continue operation if controls do not function properly.

3. Cranes, forklift trucks or other equipment can be used to remove platform occupants and stabilize motion of the machine.

5.3.2 Platform or Boom Caught Overhead

If the platform or boom becomes jammed or snagged in overhead structures or equipment, do the following:

1. Shut off the machine.
2. Rescue all people in the platform before freeing the machine. Personnel must be out of the platform before operating any controls on the machine.
3. Use cranes, forklifts, or other equipment to stabilize motion of the machine to prevent a tip over as required.
4. From the ground controls, use the Auxiliary Power System (if equipped) to carefully free the platform or boom from the object.
5. Once clear, restart the machine and return the platform to a safe position.
6. Inspect the machine for damage. If the machine is damaged or does not operate properly, turn off the machine immediately. Report the problem to the proper maintenance personnel. Do not operate the machine until it is declared safe for operation.

5.4 MANUAL SWING OVERRIDE

The manual swing override is used to manually swing the boom and turntable assembly in the event of a total power failure when the platform is positioned over a structure or obstacle. To operate the manual swing override, proceed as follows:

1. Using a 7/8 inch socket and ratchet wrench, locate nut on swing worm gear on left side of machine.
2. Install wrench on nut and ratchet in the direction desired.

5.5 EMERGENCY TOWING PROCEDURES

Towing this machine is prohibited, unless properly equipped. However, provisions for moving the machine, in case of a malfunction or power failure, have been incorporated. The following procedures are to be used ONLY for emergency movement to a suitable maintenance area.

NOTICE

The allowable towing speed is 1.9 mph (3 km/h). The maximum allowable towing distance is 0.6 miles (1 km).

1. Chock wheels securely.
2. Engage the mechanical release on both drive hubs by loosening the cap bolts, completely reversing the cap, and tightening the two bolts on each hub.
3. Connect suitable equipment, remove chocks, and move machine.

After moving machine, complete the following procedure:

1. Position machine on a firm level surface.
2. Chock wheels securely.
3. Disengage the mechanical release on both drive hubs by loosening the cap bolts, completely reversing the cap, and tightening the two bolts on each hub.
4. Remove chocks from wheels as desired.

5.6 CLEARSKY SMART FLEET™ - LOCKED OUT STATE

The machine may be placed into a Locked Out state remotely through ClearSky Smart Fleet.

If the CS550 (ClearSky® LED Motion / Amber Beacon) is removed from a machine or disconnected from the control system through damage, the machine may also be placed into a Locked Out state.

NOTICE

Contact the ClearSky Smart Fleet™ account owner if the machine is in a Locked Out state.

5.7 MACHINE SAFETY SYSTEM OVERRIDE (MSSO) (IF EQUIPPED)

The Machine Safety System Override (MSSO) is only to be used to retrieve an operator that is pinned, trapped, or unable to operate the machine. The MSSO will override function controls that are locked out from the platform and ground consoles. An example of this would be in the case of Load Sense System activation.



Note: If the MSSO functionality is used, a fault indicator is set with a fault code in the JLG Control System which must be reset by a qualified JLG Service Technician.

Note: No functional checks of the MSSO system are necessary. The JLG Control System will set a Diagnostic Trouble Code if the control switch is faulty.

Note: If the engine is not running, MSSO will function through the Auxiliary Power system.

To operate the MSSO, perform the following:

1. From the Ground Control Console, place the Platform/Ground Select switch into the Ground position.
2. Pull out the Power/Emergency Stop control switch.
3. Start the engine.
4. Press and hold the MSSO switch and the control switch for the desired function.

SECTION 6
Accessories

6.1 AVAILABLE ACCESSORIES AND RELATIONSHIP TABLE

Table 6. Available Accessories Table

Accessory					
	ANSI	CE/UKCA	AUS	GB (China)	EAC
Cable Ladder Carrier			✓		
Bolt-On External Fall Arrest (30” x 48”) (30” x 60”)	✓		✓	✓ (30” x 60” only)	
Fabric Mesh to Mid Rail			✓		
Pipe Racks	✓		✓	✓	✓
Platform Top Rail Extension (30” x 72”)	✓				
Platform Work Lights	✓	✓	✓	✓	✓
Platform Work Surface	✓	✓	✓	✓	✓
SkyGlazier®			✓		
SkyPower® - 7.5 kW	✓		✓		
Generator - 4 kW	✓	✓	✓		
SkySense®	✓	✓	✓	✓	✓
SkySense® Platform Bumper Padding	✓			✓	✓
Soft Touch	✓			✓	✓
Storage Tray	✓	✓	✓	✓	✓

Table 7. Accessories/Options Relationship Table

Accessory	Required Item	Compatible With (Note 1)	Incompatible With	Interchangeable With (Note 2)
Cable Ladder Carrier			Platform Bumper Padding, Platform MTR**, Top Rail Extension	
Pipe Racks		SkyPower	Platform MMR*, Platform MTR**, SkySense, Soft Touch	SkyCutter, SkyGlazier, SkyWelder
SkyAir	SkyPower	SkyCutter, SkyGlazier, SkyWelder		
SkyCutter	SkyPower	SkyWelder	Pipe Racks, 4 ft Platform, Platform Bumper Padding, Platform/Fabric MMR*, Platform/Fabric MTR**, SkySense, Soft Touch	SkyGlazier
SkyGlazier		SkyPower	Pipe Racks, 4 ft Platform, Platform Bumper Padding, Platform/Fabric MMR*, Platform/Fabric MTR**, SkySense, Soft Touch, Top Rail Extension	SkyCutter, SkyWelder
SkyPower		SkyCutter, SkyGlazier, SkyWelder	SkySense	
SkySense			Pipe Racks, Platform MMR*, Platform MTR**, SkyGlazier, SkyPower, SkyWelder, Soft Touch, Top Rail Extension	
SkySense Platform Bumper Padding		SkySense	Cable Ladder Carrier, SkyWelder, Platform/Fabric MTR, Platform/Fabric MMR, Soft Touch, Storage Tray, Sky Glazier, Platform Work Surface	
SkyWelder	SkyPower	SkyCutter	Pipe Racks, 4 ft Platform, Platform/Fabric MMR*, Platform/Fabric MTR**, Platform Bumper Padding, Soft Touch	SkyGlazier
Soft Touch		SkyPower	Pipe Racks, Platform Bumper Padding, SkyCutter, SkyGlazier, SkySense, SkyWelder	

Note: 1. Any non - "Sky" accessory not listed under "Incompatible With" is assumed to be compatible.

Table 7. Accessories/Options Relationship Table (continued)

Accessory	Required Item	Compatible With (Note 1)	Incompatible With	Interchangeable With (Note 2)
Note: 2. Can be used on the same unit but not simultaneously.				
* MMR = Mesh to Mid Rail; ** MTR = Mesh to Top Rail				

6.2 BOLT-ON EXTERNAL FALL ARREST

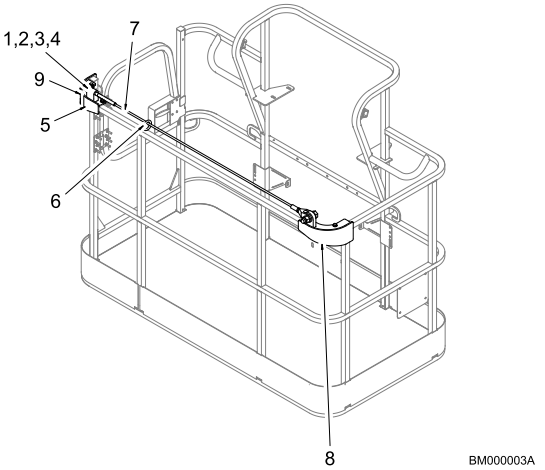

Figure 16. Bolt-On External Fall Arrest System

1. Belleville Washer
2. Washer
3. Hex Nut
4. Jam Nut
5. LH Bracket
6. Attachment Ring
7. Cable
8. RH Bracket
9. Decal

The bolt-on external fall arrest system is designed to provide a lanyard attach point while allowing the operator to access areas outside the platform. Exit/Enter the platform through the gate area only. The system is designed for use by one person.

Personnel must use fall protection at all times. A full body harness is required with lanyard not to exceed 6 ft (1.8 m) in length, that limits the maximum arrest force to 900 lb (408 kg).

External Fall Arrest System capacity is 310 lb (140 kg) - one (1) person maximum.

Do not move platform during use of the external fall arrest system.

⚠ WARNING

Do not operate any machine functions while outside of platform. Be careful when entering/exiting the platform at elevation.

⚠ WARNING

If the external fall arrest system is used to arrest a fall or is otherwise damaged, the entire system must be replaced and the platform fully inspected before returning to service. Refer to the service manual for removal and installation procedures.

NOTICE

The external fall arrest system requires an annual inspection and certification. The annual inspection and certification must be performed by a qualified person other than the user.

6.2.1 Inspection Before Use

The external fall arrest system must be inspected before each use of the machine. Replace components if there are any signs of wear or damage.

Before each use, perform a visual inspection of the following components:

- Cable: Inspect cable for proper tension, broken strands, kinks, or any signs of corrosion.

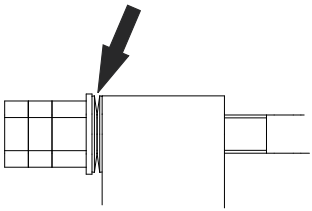

Figure 17. Incorrect Gap

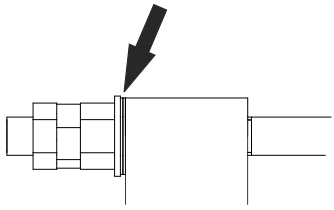

Figure 18. Correct Gap

Note: There should be no visible gap between the two Belleville washers when setting proper cable tension. If any gap is shown between the two Belleville washers, the cable tension is incorrect.

- Fittings & Brackets: Ensure all fittings are tight and there are no signs of fractures. Inspect brackets for any damage.
- Attachment Ring: No cracks or signs of wear are acceptable. Any signs of corrosion requires replacement.
- Attaching Hardware: Inspect all attaching hardware to ensure there are no missing components and hardware is properly tightened.
- Platform Rails: No visible damage is acceptable.

6.3 CABLE LADDER CARRIER

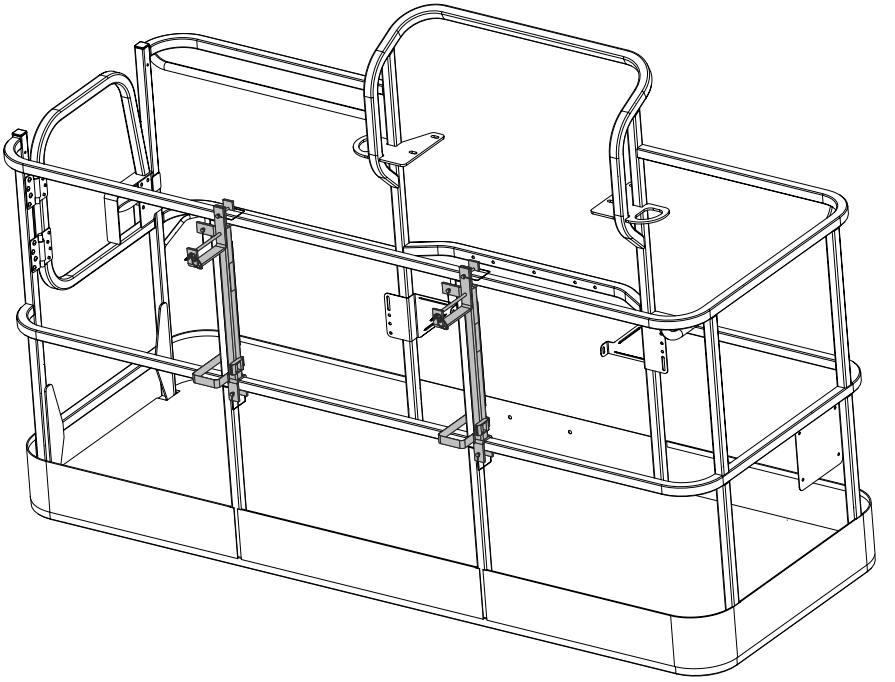

Figure 19. Cable Ladder Carrier

The Cable Ladder Carrier accessory consists of two vertical brackets mounted to the outside of the platform used to carry a “ladder” style cable tray.

6.4 PIPE RACKS

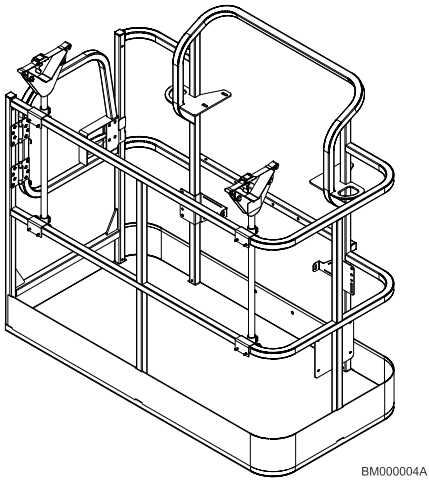

Figure 20. Pipe Racks

Pipe Racks provide a way to store pipe or conduit inside the platform in order to prevent rail damage and optimize platform utility. This accessory consists of two racks with adjustable straps to secure the load in place.

6.4.1 Capacity Specifications (Australia Only)

Max. Capacity in Racks	Max. Platform Capacity (With Max. Weight in Racks)
80 kg	184 kg
Max. Length of Material in Racks: 6.0 m **Min. Length of Material in Racks**: 2.4 m	

6.4.2 Safety Precautions

⚠ WARNING

Reduce platform capacity by 100 lb (45.5 kg) when installed.

⚠ WARNING

Weight in racks plus weight in platform must not exceed rated capacity.

NOTICE

The maximum load in the racks is 180 lb (80 kg) evenly distributed between the two racks.

NOTICE

The maximum length of material in racks is 20 ft (6.1 m).

- Ensure no personnel are beneath the platform.
- Do not exit platform over rails or stand on rails.
- Do not drive machine without material secured.
- Return racks to the stowed position when not in use.
- Use this option only on approved models.

6.4.3 Preparation and Inspection

- Ensure racks are secured to the platform rails.
- Replace torn or frayed tie-down straps.

6.4.4 Operation

1. To prepare racks for loading, remove locking pins, rotate each rack 90 degrees from stowed to working position, then secure with locking pins.
2. Loosen and remove tie-down straps. Place material on racks with weight evenly distributed between both racks.
3. Route the tie-down straps at each end across loaded material and tighten.
4. To remove material, loosen and remove tie-down straps, then carefully remove material from racks.

Note: Reinstall tie-down straps across any remaining material before continuing machine operations.

6.5 PLATFORM WORK LIGHTS

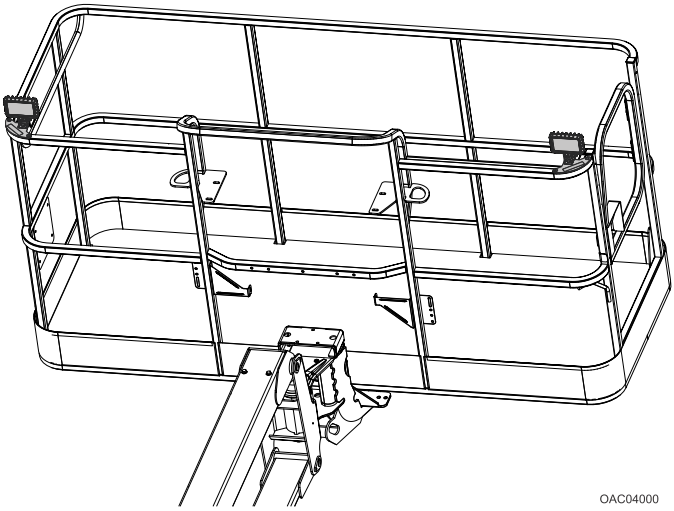

Figure 21. Platform Work Lights

The Platform Work Lights accessory consists of two 12V lights mounted to the platform railing.

6.6 PLATFORM WORK SURFACE

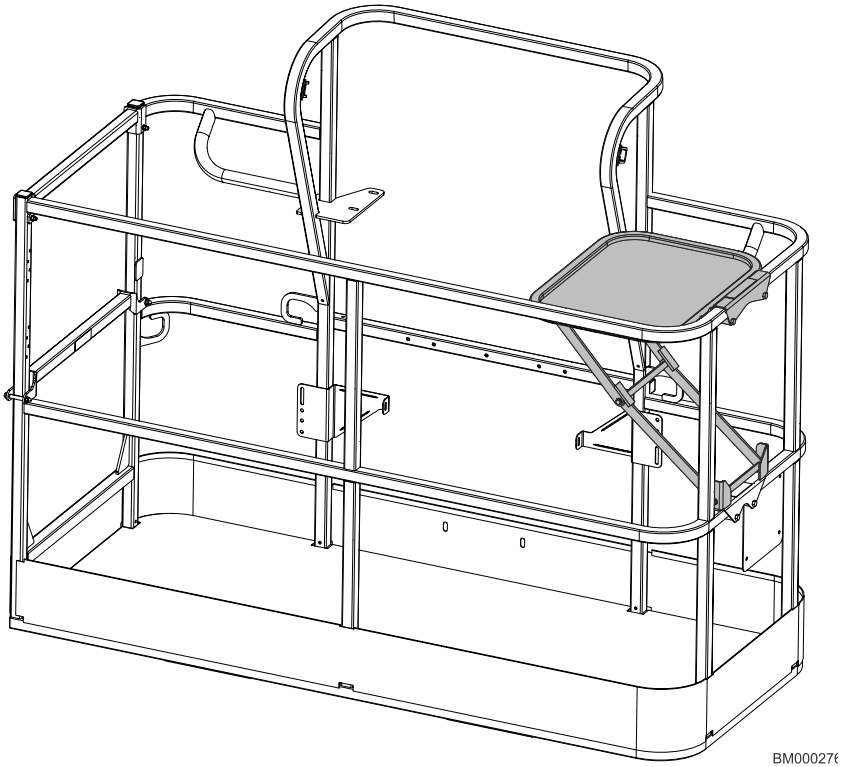

Figure 22. Platform Work Surface

The platform work surface option consists of a corner tray bolted onto the top and mid rails of the platform.

6.7 SKYGLAZIER®

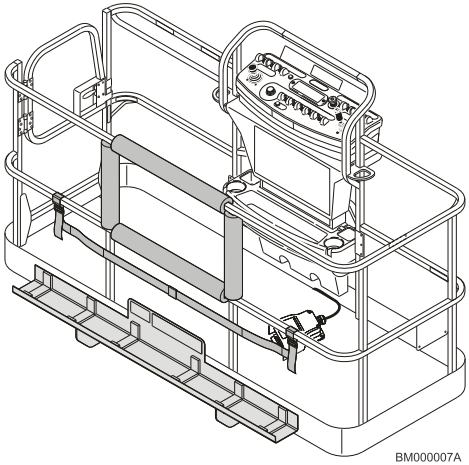

Figure 23. SkyGlazier System

SkyGlazier allows glaziers to position panels efficiently. The glazier package consists of a tray that attaches to the bottom of the platform. The panel rests on the tray and against top-rail of the platform, which is padded to prevent damage. SkyGlazier includes a strap to secure the panel to the platform rail.

6.7.1 Capacity Specifications

Capacity Zone *	Max. Tray Capacity	Max. Platform Capacity With Max. Weight in Tray
500 lb (227 kg/230 kg)	150 lb (68 kg)	250 lb (113 kg)
550 lb (249 kg/250 kg)	150 lb (68 kg)	250 lb (113 kg)
600 lb (270 kg/272 kg)	150 lb (68 kg)	250 lb (113 kg)
660 lb (299 kg/300 kg)	150 lb (68 kg)	350 lb (160 kg)
750 lb (340 kg)	150 lb (68 kg)	440 lb (200 kg)
1000 lb (450 kg/454 kg)	250 lb (113 kg)	500 lb (227 kg)
* Refer to the capacity decals installed on the machine for capacity zone information.		
Required Platform Type: Side-Entry		
Maximum Dimensions of Panel: 32 sq ft (3 sq m)		
Maximum Wind Speed: 20 mph (32 kph)		

6.7.2 Safety Precautions

⚠ WARNING

Ensure panel is secured with strap.

⚠ WARNING

Do not overload tray or platform. Total machine capacity is reduced when tray is installed.

⚠ WARNING

With SkyGlazier installed, the original platform capacity ratings are reduced as specified in the specifications table above. Do not exceed the new platform capacity rating. Refer to capacity decal located on tray.

⚠ WARNING

An increase of the area exposed to the wind will decrease stability. Limit panel area to 32 sq ft (3 sq m). Maximum allowable wind speed is 20 mph (32 kph).

- Ensure no personnel are beneath platform.
- Do not exit platform over rails or stand on rails.
- Remove tray when not in use.
- Use this option only on approved models.

6.7.3 Preparation and Inspection

- Check for cracked welds and damage to tray.
- Ensure tray is properly secured to platform.
- Ensure strap is not torn or frayed.

6.7.4 Operation

1. Load SkyGlazier tray with panel.
2. Position panel to its desired location on the tray.
3. Route the adjustable strap around the panel and tighten until secure.

6.8 SKYPOWER® 7.5 KW AND GENERATOR 4 KW

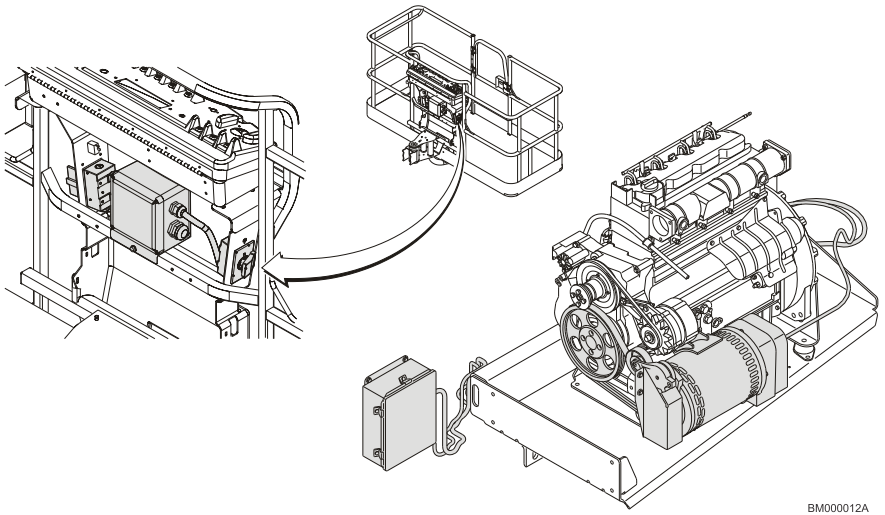

Figure 24. SkyPower and Generator Systems

The SkyPower and generator systems supply AC power to the platform through an AC receptacle to run tools, lights, cutting, and welding equipment.

All power regulation components are located in a watertight box connected by cable to the generator. The generator supplies power when running at the specified speed with the power switch on (switch is located on platform). A two-pole, 20 A (4 kW) or a three-pole, 30 A (7.5 kW) circuit breaker protects the generator from overload.

6.8.1 Output

SkyPower 7.5 kW Specifications:

- 3-phase: 240 V, 60 Hz, 7.5 kW (Peak: 8.5 kW)
- 1-phase: 240 V / 120 V, 60 Hz, 6 kW (Peak: 6 kW)

Generator 4 kW Specifications:

- 1-phase: 240 V / 120 V, 60 Hz, 4 kW
- 1-phase: 230 V / 115 V, 50 Hz, 4 kW

6.8.2 Safety Precautions

⚠ WARNING

Do not overload platform.

- Ensure no personnel are beneath platform.
- This factory-installed option is available only on specified models.
- Keep lanyard attached at all times.
- Do not use electrical tools in water.
- Use correct voltage for tool being used.
- Do not overload circuit.

6.8.3 Preparation and Inspection

- Ensure generator is secure.
- Check condition of belt and wiring.

6.8.4 Operation

Start the engine, then turn on the generator.

Refer to the Miller Generator Technical Manual (PN 3121677) for more information.

6.9 SKYSENSE®

⚠ WARNING

SkySense is not intended to replace or reduce the need for the operator to be aware of the environment around the machine. Hazards that will cause serious injury or death may not be prevented or reduced by SkySense. The operator must always look in the direction of travel, avoid power lines, avoid obstacles that could strike the machine or persons in the platform, and follow all instructions, decals, and other warnings provided with this machine.

The operator must not rely on SkySense as a substitute for following the instructions and warnings contained in the manuals and placards provided with this machine.

SkySense is intended to assist the operator. SkySense may not detect certain objects depending on shape, type of material, or orientation of the object to the sensors. It is the operator's responsibility to be aware of their surroundings at all times.

⚠ WARNING

De-rate the platform by 10 lb (4.5 kg) per bar when installed on the platform (20 lb (9 kg) or 30 lb (14 kg) total).

Note: SkySense is not active when operating the machine from the ground controls.

6.9.1 Preparation and Inspection

Pre-Operation Inspection:

1. Inspect each of the SkySense tubes for dents, cracks, or other damage.
2. Inspect each SkySense sensor for any damage to the housing or sensor.

To test the SkySense system:

1. In an area free of obstructions, ensure the machine is on a smooth, firm surface within the limits of the maximum operating slope.
2. From the platform control console, elevate the boom until the bottom of the platform is at least 6 feet off the ground.
3. Continue to elevate the platform.
4. While elevating, hold your hand 6 inches to 12 inches above one of the upward facing sensors. The machine should stop, and the LED corresponding to that sensor (left LED for left sensor bar; right LED for right sensor bar; both LEDs for center sensor bar or overhead sensor) should be red.
5. Recycle the footswitch and press the override button on the platform control console.
6. Ensure the area below the platform is clear of obstructions and lower the platform. The machine should slow down, (SkySense Status LED will blink yellow with increasing frequency) and stop, (SkySense Status LED will be illuminated solid red) when the bottom of the platform is approximately 12 inches from the ground. The alarm should sound if it is not muted (refer to SkySense Alarm).
7. Recycle the footswitch and press the override button on the platform control console.
8. Continue to lower the platform. The machine should move in the elevated drive speed mode (SkySense Status LED will remain red).

Note: The SkySense system will not stop machine operation while in Creep.

6.9.2 Operation

SkySense slows a machine's function to creep speed when it is a certain distance away from an object, known as the "warning zone." If the machine continues to approach the object and moves into the "stop zone," SkySense stops all machine functions.

For proportional functions activated by the joystick, the size of the warning zone varies based on the amount of joystick activation. The stop zone always activates at the same distance from the object regardless of the joystick's position.

If the function has reached the warning zone, normal drive speed will resume when a function is activated in the opposite direction. If the machine has reached the SkySense stop zone, release the function and recycle the footswitch to activate a function in the opposite direction.

SkySense is active during the following functions:

- Lift Up/Down (including jib functions)
- Platform Rotate (including jib rotate)
- Telescope Out
- Swing
- Reverse Drive

Note: During active DOS (Drive Orientation System), SkySense is active when driving in both forward and reverse directions.

There are two LED indicators on the platform control box that signal SkySense activity.

- **No LED**: Normal operation.
- **LED Flashing Yellow**: Machine is in SkySense warning zone and will reduce function speed to creep. Flash frequency correlates to proximity of object.
- **LED Red**: Machine is in SkySense stop zone and all machine functions will cease.
- **LED Flashing Red**: SkySense sensor is obstructed or damaged. Obstructions must be removed and proper function verified. Damaged sensors must be replaced.

6.9.3 SkySense Platform Panel Indicators

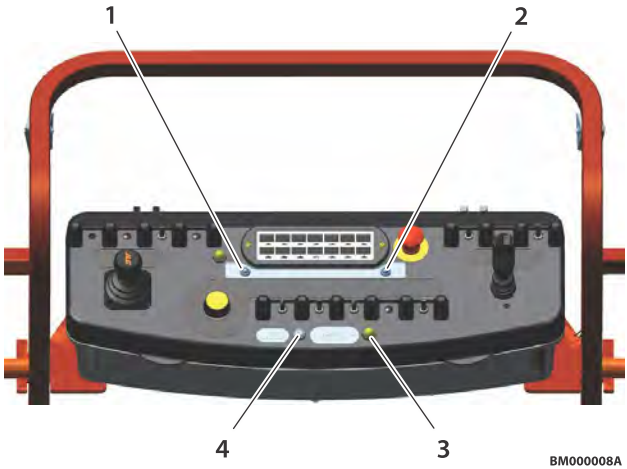

1. LED Indicator Light
2. LED Indicator Light
3. Override Button
4. Mute Speaker Button

6.9.4 SkySense Alarm

Activation of SkySense is signaled by an audible alarm and the LEDs on the platform console that indicate SkySense activity when reaching the warning or stop zones.

In the warning zone, the audible alarm will pulse and increase in frequency as the machine moves closer to the object. In the stop zone, the alarm will sound a continuous tone.

Additionally, when the machine is in the stop zone, the platform control panel audible alarm will sound. The system may be reset by recycling the footswitch.

The audible SkySense alarms can be muted by a button on the platform control console, although LEDs will continue to light. The platform control panel alarm will sound when the machine enters the SkySense stop zone even when muted.

6.9.5 SkySense Override Button

The yellow override button allows operators to bypass normal SkySense operation in order to move closer to an object in the stop zone.

When the operator overrides the SkySense via the override button to get closer to a work surface, the machine will maintain creep speed and flash the appropriate indicator color based on location in either the warning or stop zones.

Note: Override is only required to be engaged if the operator desires to move the platform closer to an object that is in or entering the stop zone.

NOTICE

SkyGuard operation is affected when SkySense is installed on a machine. If SkySense activation occurs prior to SkyGuard activation, SkyGuard will only cut out functions if activated. If SkyGuard activation occurs prior to SkySense activation, SkyGuard will function normally.

6.9.6 SkySense Coverage Areas

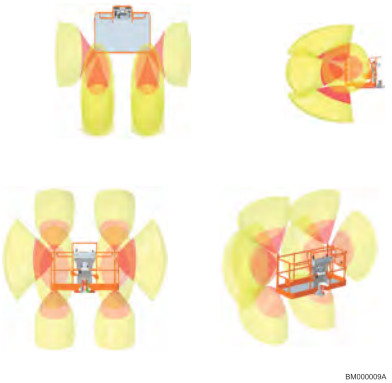

Figure 25. SkySense Coverage Level 1 Areas (2– Bar)



Figure 26. SkySense Coverage Level 2 Areas (3 — Bar)

Note: Sensor Cones shown are approximations for reference only.

6.10 SKYSENSE® PLATFORM BUMPER PADDING

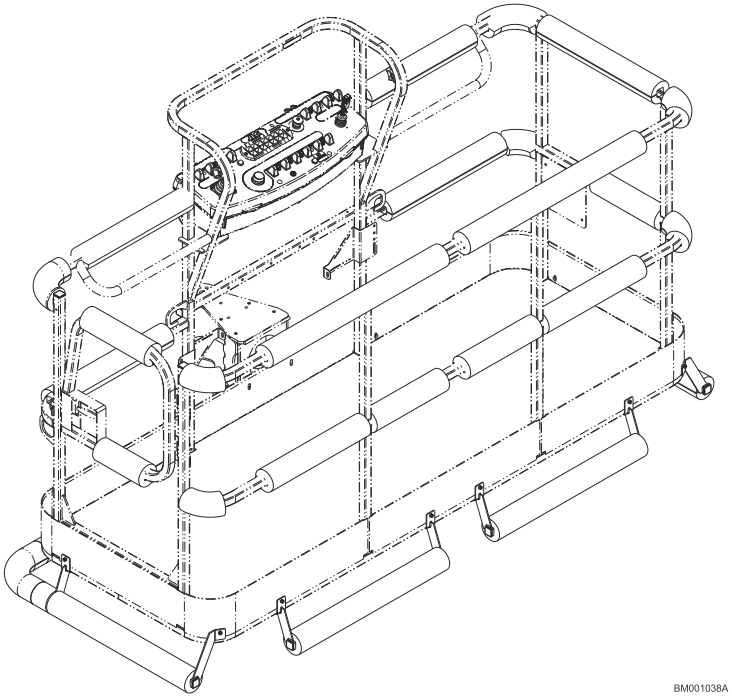

Figure 27. Platform Bumper Padding

This accessory outfits machines equipped with the SkySense accessory additional padding for the platform.

6.11 SOFT TOUCH

A padding kit is mounted to the platform rails and to a frame suspended below the platform. Limit switches deactivate platform functions when the padded framework contacts an adjacent structure. A button on the platform console allows override of the system.

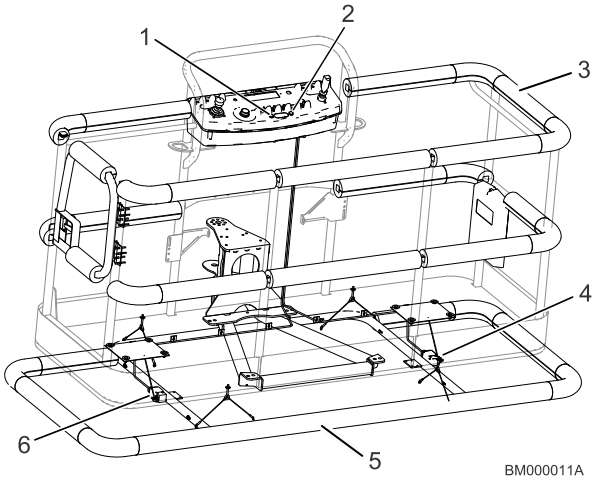

Figure 28. Soft Touch System

1. Override Indicator Light
2. Override Button
3. Rail Bumper
4. Limit Switch
5. Suspended Frame and Rail Bumper
6. Limit Switch

6.12 SOFT TOUCH (WORK LOAD CAPACITY)

Table 8. Maximum Work Load Capacity with Soft Touch

Machine Model	Weight
Maximum Work Load (Capacity) - 520AJ HC3 ANSI/GB	
Unrestricted: Restricted: Restricted:	588 lb (266 kg) 678 lb (307 kg) 928 lb (421 kg)

SECTION 7
General Specifications and Operator Maintenance

7.1 GENERAL

This section of the manual provides additional necessary information to the operator for proper operation and maintenance of this machine.

The maintenance portion of this section is intended as information to assist the machine operator to perform daily maintenance tasks only and does not replace the more thorough Preventive Maintenance and Inspection Schedule included in the Service & Maintenance Manual.

7.2 SERIAL NUMBER LOCATION

A serial number plate is affixed to the left side of the frame. If the serial number plate is damaged or missing, the machine serial number is stamped on the left side of the frame.

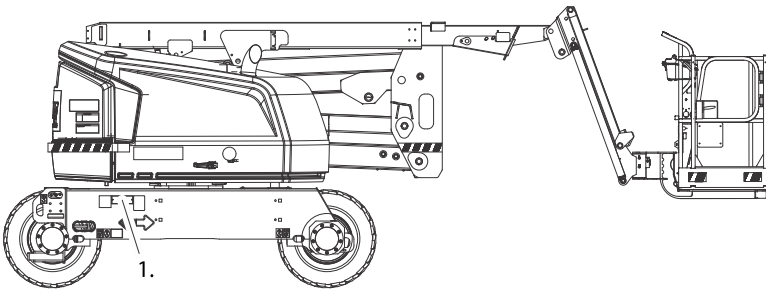

1. Serial Number Plate

7.3 OPERATING SPECIFICATIONS

Table 9. Operating Specifications

Maximum Work Load (Capacity):	
Unrestricted: ANSI	660 lb (299 kg)
Unrestricted: CE/UKCA, AS/NZS, GB, EAC	660 lb (300 kg)
Restricted: ANSI	750 lb (340 kg)
Restricted: CE/UKCA, AS/NZS, GB, EAC	750 lb (340 kg)
Restricted: ANSI	1000 lb (454 kg)
Restricted: CE/UKCA, AS/NZS, GB, EAC	1000 lb (450 kg)

Table 9. Operating Specifications (continued)

Maximum Operating Slope	5°
Maximum Travel Grade, Stowed Position Gradeability Side Slope	 45% 5°
Maximum Manual Force	400 N
Drive Speed - Stowed	4.25 mph (6.8 km/h)
Gross Machine Weight - Approximate	19,000 lb (8,618 kg)
Maximum Ground Bearing Pressure	102.6 psi (7.2 kg/cm^2)
Maximum Wind Speed	28 mph (12.5 m/s)
Max. Tire Load	10,460 lb (4745 kg)
System Voltage	12V DC
Maximum Main Relief Hyd. Pressure	4060 psi (280 Bar)
Average Fuel Consumption	0.65 gph (2.46 lph)

7.3.1 Dimensional Data

Table 10. Dimensional Data

Turning Radius (Inside) Turning Radius (Outside)	6'9" (2.06 m) 15'8" (4.78 m)
Machine Height (stowed)	89.3" (2269 mm)
Machine Length (stowed)	305.8" (7768 mm)
Up and Over Platform Height	24' (7.3 m)
Horizontal Reach	32.8' (10 m)
Machine Width	92.6" (2353 m)
Wheel Base	93.0" (2362 mm)
Platform Height	52'6" (16 m)
Ground Clearance	16.5" (419 mm)

7.3.2 Capacities

Table 11. Capacities

Hydraulic System	17.3 gal. (65.5 L)
Hydraulic Oil Tank (to Full Level)	15 Gal. (56.8 L)

Table 11. Capacities (continued)

Drive Hub	24 oz. (0.7 L)
Drive Brake	2.7 oz. (0.08 L)

7.3.3 Engine Data

Table 12. Deutz D2011 L03

Fuel	Diesel
No. of Cylinders	3
Bore	3.7 in (94 mm)
Stroke	4.4 in (112 mm)
Displacement	142 cu. in (2331 cm³)
Oil Capacity Crankcase Cooler Total capacity	 6.3 qt (6 L) 3.7 qt (3.5 L) 10 qt (9.5 L)
Low RPM	1200
Mid RPM Tower Lift, Upper Lift, Tele Swing, Basket Level, Basket Rotate, Jib Lift	 1800 1500
High RPM	2800

7.3.4 Tires

Table 13. Tires

Size	Type	Pressure	Weight
33x12-20	Solid	N/A	285lb (129 kg)
33x12 D610	Foam-Filled	80 psi	268 lb (121.7 kg)
14 x 17.5	Foam-Filled	90 psi	440 lb (200 kg)

7.4 HYDRAULIC OIL SPECIFICATIONS

Table 14. Hydraulic Oil SAE Viscosity Grade Operating Temperature Ranges

Hydraulic System Operating Temperature Range	SAE Viscosity Grade
+0° to + 180° F (-18° to +83° C)	10W
+0° to + 210° F (-18° to + 99° C)	10W–20, 10W–30
+50° to + 210° F (+10° to + 99° C)	20W–20

Note: Hydraulic oils require anti-wear qualities at least to API Service Classification GL-3 and sufficient chemical stability for mobile hydraulic system service. JLG Industries recommends standard UTTO.

Note: Aside from JLG recommendations, it is not advisable to mix oils of different brands or types, as they may not contain the same required additives or be of comparable viscosities. If use of hydraulic oil other than standard UTTO is desired, contact JLG Industries for proper recommendations.

Note: Machine operation using non-JLG approved hydraulic fluids or operation outside of the temperature boundaries outlined in the hydraulic fluid operation charts may result in premature wear or damage to components of the hydraulic system.

Note: Machines may be equipped with standard UTTO biodegradable and non-toxic hydraulic oil. This is a fully synthetic hydraulic oil that possesses the same anti-wear and rust protection characteristics as mineral oils, but will not adversely affect the ground water or the environment when spilled or leaked in small amounts.

Note: When temperatures remain consistently below 20° F (-7° C), JLG Industries recommends the use of a premium “cold weather” hydraulic fluid (Viscosity Gr. 32).

Table 15. Hydraulic Oil Properties and Classifications

Fluid	Properties		Base				Classifications		
Description	Viscosity at 40° C *	Viscosity Index	Mineral Oils	Vegetable Oils	Synthetic	Synthetic Polyol Esters	Readily Biodegradable**	Virtually Non-toxic †	Fire Resistant ‡
Shell Spirax S4 TXM — Recommended	**67**	**146**	**X**						
Mobilfluid 424 — ***Optional***	60	134	X						
Shell Tellus S2 VX32 — Recommended	**32**	**142**	**X**						
Mobil DTE 10 Excel 32 — ***Optional***	32	164	X						
Shell Tellus S4 VX32 — Recommended	**32**	**296**	**X**						
Univis HVI 26 — ***Optional***	26	376	X						
Shell Naturelle HF-E32 — Recommended	**31**	**192**		**X**			**X**	**X**	
Mobil EAL Envirosyn H32 — ***Optional***	34	146		X			X	X	
Shell Naturelle HF-E46 — Recommended	**46**	**193**			**X**		**X**	**X**	
Mobil EAL Envirosyn H46 — ***Optional***	49	145			X		X	X	
Quintolubric 888-46	48	190				X	X	X	X
Hydrolube HP-5046D	46	192				X	X	X	X

* cSt, Typical

** Readily biodegradeable classification indicates one of the following:

CO2 Conversion > 60% per EPA 560/6-82-003
CO2 Conversion > 80% per CEC-L-33-A-93

† Virtually Non-toxic classification indicates a LC50 > 5000 ppm per OECD 203

‡ Fire Resistant classification indicates Factory Mutual Research Corp. (FMRC) Approval

7.5 HYDRAULIC OIL OPERATING TEMPERATURE SPECIFICATIONS

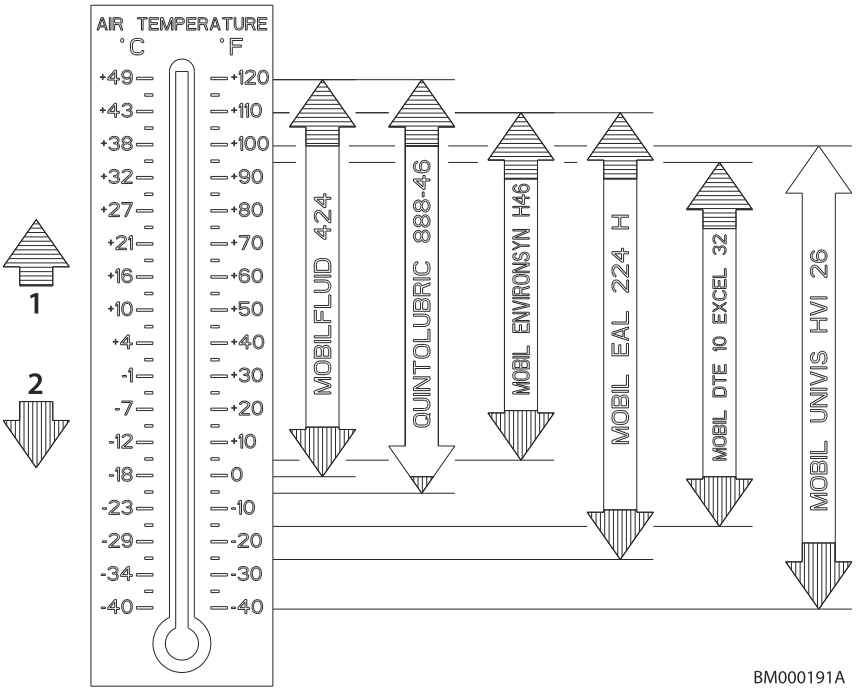

1. The addition of a hydraulic oil cooler is highly recommended for prolonged operation in this temperature range (Consult JLG Service).

2. Operation in this temperature range should include the use of hydraulic system heating aids (Consult JLG Service). The addition of a hydraulic oil cooler is not recommended for operation in this temperature range.

7.6 DEUTZ D2011 ENGINE OIL OPERATING TEMPERATURE SPECIFICATIONS

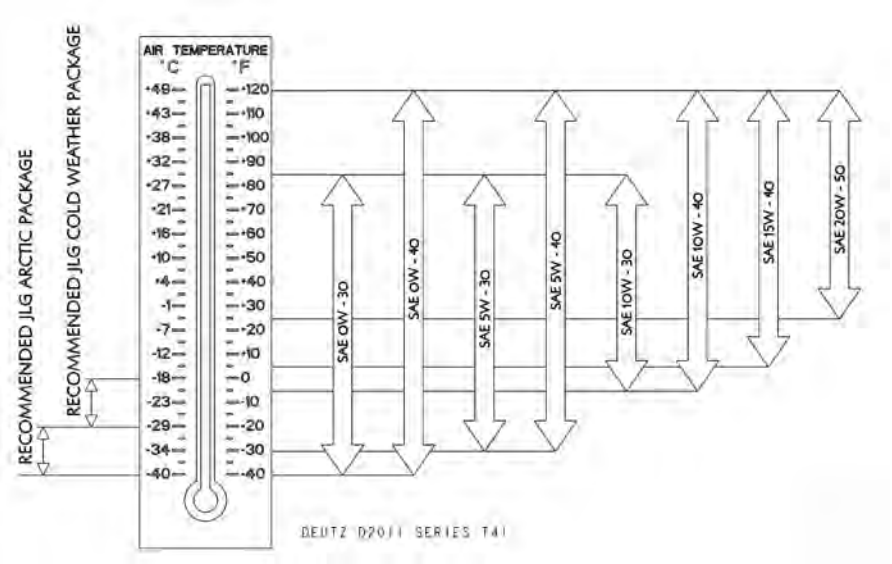

7.7 DEUTZ (T4F/STAGE V) ENGINE OIL OPERATING TEMPERATURE SPECIFICATIONS

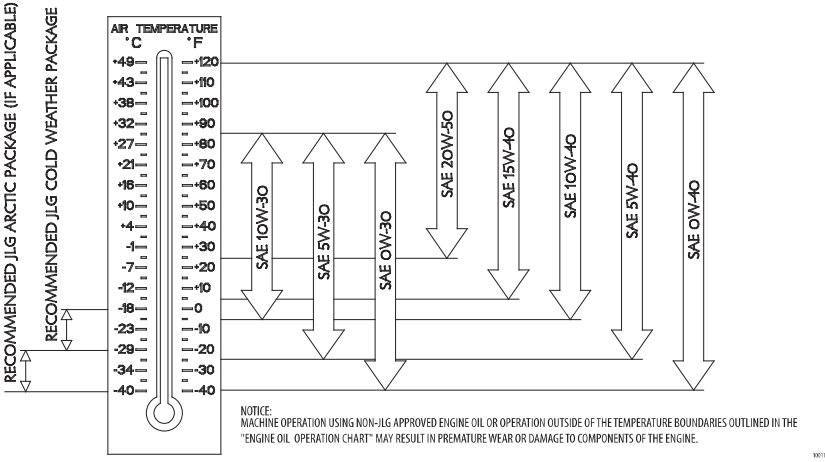

7.8 OPERATOR MAINTENANCE AND LUBRICATION DIAGRAM

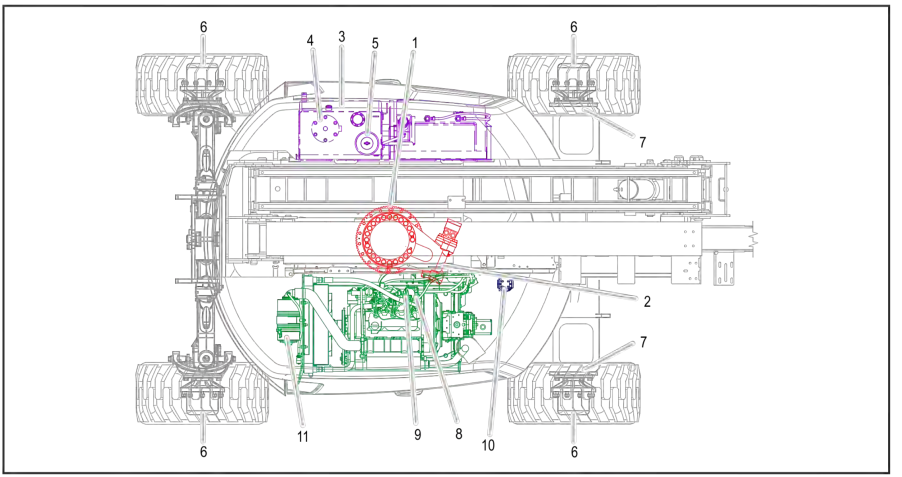

7.9 OPERATOR MAINTENANCE

Note: The following numbers correspond to those in Figure — Operator Maintenance and Lubrication Diagram.

Table 16. Lubrication Specifications.

KEY	SPECIFICATIONS
BG*	Bearing Grease (JLG Part No. 3020029) Mobilith SHC 460.
HO	Hydraulic Oil. API service classification GL-4, e.g. Standard UTTO.
EPGL	Extreme Pressure Gear Lube (oil) meeting API Service Classification GL-5 or Mil-Spec Mil-L-2105.
MPG	Multipurpose Grease having a minimum dripping point of 350° F (177° C). Excellent water resistance and adhesive qualities, and being of extreme pressure type. (Timken OK 40 pounds minimum.)
EO	Engine (crankcase). Gas (5W30)- API SN, -Arctic ACEA AI/BI, A5/B5 - API SM, SL, SJ, EC, CF, CD - ILSAC GF-4. Diesel (15W40, 5W30 Arctic) - API CJ-4.
*MPG may be substituted for these lubricants, if necessary, but service intervals will be reduced.	

NOTICE

Lubrication intervals are based on machine operation under normal conditions. For machines used in multi-shift operations and/or exposed to hostile environments or conditions, lubrication frequencies must be increased accordingly.

1. Swing Bearing
   Lube Point(s) - Fitting
   Capacity - A/R
   Lube - BG
   Interval - Every 3 months or 150 hrs of operation
   Comments - Apply grease and rotate in 90 degree intervals until bearing is completely lubricated

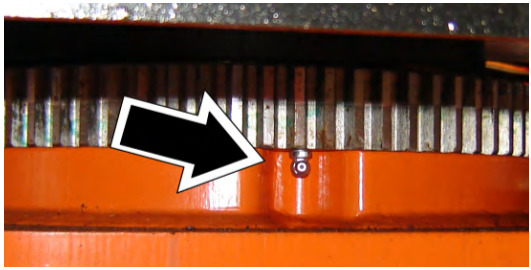

2. Swing Bearing/Worm Gear Teeth
   Lube Point(s) - Grease Fitting
   Capacity - A/R
   Lube - Lubriplate 930-AAA
   Interval - A/R

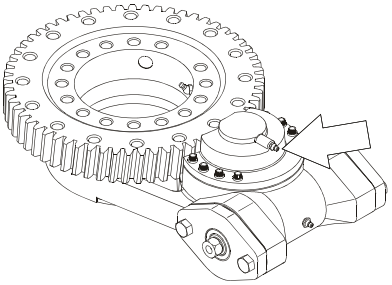

   Lube Point(s) - Grease Fitting
   Capacity - A/R
   Lube - Mobil SHC 007
   Interval - A/R

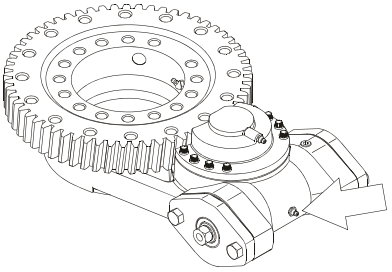

⚠ CAUTION

Do not overgrease bearings. Overgreasing bearings will result in damage to outer seal in housing.

3. Hydraulic Tank
   Lube Point(s) - Fill Cap
   Capacity - 15 Gal. (57 L) to Full Level
   Lube - HO
   Interval - Check Level daily; Change every 2 years or 1200 hours of operation.
   Comments - On new machines, those recently overhauled, or after changing hydraulic oil, operate all systems a minimum of two complete cycles and recheck oil level in reservoir.

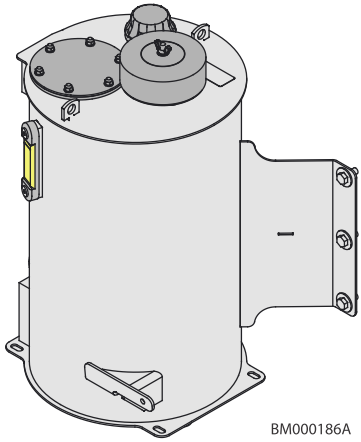

4. Hydraulic Return Filter
   Lube Point(s) - Replaceable Element
   Interval - Change after first 50 hours and every 6 months or 300 hours thereafter



5. Hydraulic Tank Breather
   Interval - Change after first 50 hrs. and every 6 months or 300 hrs. thereafter.
   Comments - Remove wing nut and cover to replace. Under certain conditions, it may be necessary to replace on a more frequent basis.



6. Wheel Drive Hub
   Lube Point(s) - Level/Fill Plug
   Capacity - 24 oz. (0.8 L)(1/2 Full)
   Lube - EPGL
   Interval - Check level every 3 months or 150 hrs of operation; change every 2 years or 1200 hours of operation

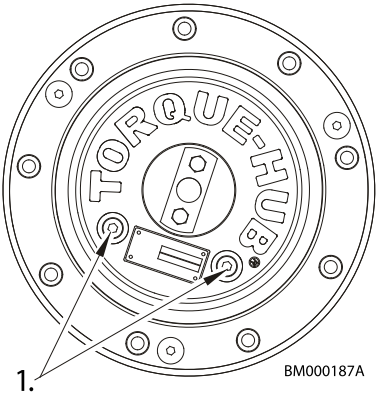

1. Oil Level Check And Fill

7. Drive Brake
   Lube Point(s) - Fill Plug
   Capacity - 2.7 oz. (89 mL)
   Lube - DTE-13M
   Interval - Change as necessary

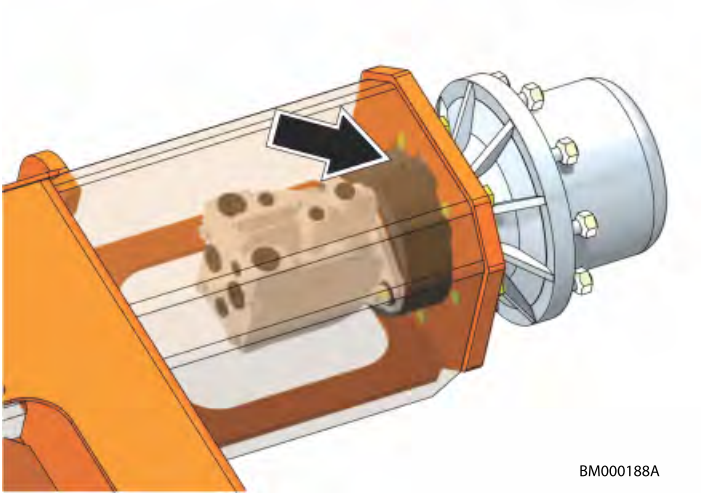

8. Oil Change with Filter - Deutz 2.3L (D2011 L03)
   Lube Point(s) - Fill Cap/Spin-on Element
   Capacity - 10 Quarts (9.5 L) with Filter
   Lube - EO
   Interval - Check level daily; change every 500 hours or six months, whichever comes first. Adjust final oil level by mark on dipstick.

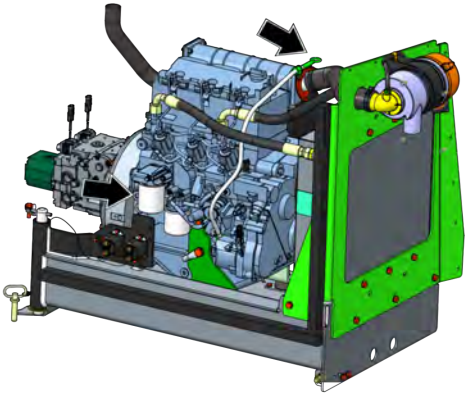

9. Fuel Filter/Water Separator - Deutz 2.3L (D2011 L03)
   Lube Point(s) - Replaceable Element
   Interval - Every year or 500 hours of operation

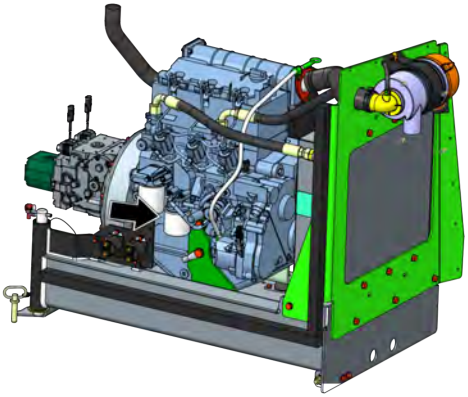

10. Charge Filter
    Interval - Change after first 50 hrs. and every 6 months or 300 hrs. thereafter.
    Comments - Remove the engine tray retaining bolt and pull out engine tray to gain access.



11. Air Filter
    Lube Point(s) - Replaceable Element
    Interval - Every 6 months or 300 hours of operation or as indicated by the condition indicator
    Comments - Check Dust Valve daily



7.10 TIRES AND WHEELS

7.10.1 Tire Damage

For polyurethane foam filled tires, JLG Industries, Inc. recommends that when any of the following are discovered, measures must be taken to remove the JLG product from service immediately and arrangements must be made for replacement of the tire or tire assembly.

- a smooth, even cut through the cord plies which exceeds 3 inches (7.5 cm) in total length
- any tears or rips (ragged edges) in the cord plies which exceed 1 inch (2.5 cm) in any direction
- any punctures which exceed 1 inch in diameter
- any damage to the bead area cords of the tire

If a tire is damaged but is within the above noted criteria, the tire must be inspected on a daily basis to insure the damage has not propagated beyond the allowable criteria.

7.10.2 Tire Replacement

JLG recommends a replacement tire be the same size, ply and brand as originally installed on the machine. Please refer to the JLG Parts Manual for the part number of the approved tires for a particular machine model. If not using a JLG approved replacement tire, we recommend that replacement tires have the following characteristics:

- Equal or greater ply/load rating and size of original

- Tire tread contact width equal or greater than original
- Wheel diameter, width, and offset dimensions equal to the original
- Approved for the application by the tire manufacturer (including inflation pressure and maximum tire load)

Unless specifically approved by JLG Industries Inc. do not replace a foam filled or ballast filled tire assembly with a pneumatic tire. When selecting and installing a replacement tire, ensure that all tires are inflated to the pressure recommended by JLG. Due to size variations between tire brands, both tires on the same axle should be the same.

7.10.3 Wheel Replacement

The rims installed on each product model have been designed for stability requirements which consist of track width and load capacity. Size changes such as rim width, center piece location, larger or smaller diameter, etc., without written factory recommendations, may result in an unsafe condition regarding stability.

7.10.4 Wheel Installation

It is extremely important to apply and maintain proper wheel mounting torque.

⚠ WARNING

Wheel nuts must be installed and maintained at the proper torque to prevent loose wheels, broken studs, and possible dangerous separation of wheel from the axle. Be sure to use only the nuts matched to the cone angle of the wheel.

Tighten the lug nuts to the proper torque to prevent wheels from coming loose. Use a torque wrench to tighten the fasteners. If you do not have a torque wrench, tighten the fasteners with a lug wrench, then immediately have a service garage or dealer tighten the lug nuts to the proper torque. Over-tightening will result in breaking the studs or permanently deforming the mounting stud holes in the wheels. The proper procedure for attaching wheels is as follows:

1. Start all nuts by hand to prevent cross threading. DO NOT use a lubricant on threads or nuts.

2. Tighten nuts in the following sequence:

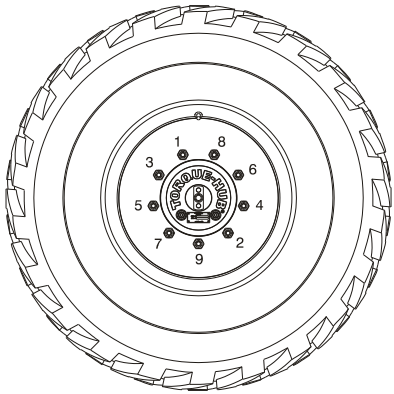

3. The tightening of the nuts should be done in stages. Following the recommended sequence, tighten nuts per wheel torque chart.

4. Wheel nuts should be torqued after first 50 hours of operation and after each wheel removal. Check torque every 3 months or 150 hours of operation.

Table 17. Wheel Torque Chart

TORQUE SEQUENCE		
1st Stage	2nd Stage	3rd Stage
40 ft. lbs. (55 Nm)	95 ft. lbs. (130 Nm)	170 ft. lbs. (230 Nm)

7.11 RADIO FREQUENCY (RF) INFORMATION

Note: The ClearSky® CS550 connectivity module antenna is internal to the assembly.

7.11.1 Federal Communications Commission (FCC)

FCC Interference Statement

ClearSky CS550 has been tested and found to comply with the limits for a Class B digital device, pursuant to Part 15 of the FCC Rules. These limits are designed to provide reasonable protection against harmful interference in a residential installation. This equipment generates, uses and can radiate radio frequency energy and, if not installed and used in accordance with the instructions, may cause harmful interference to radio communications. However, there is no guarantee that interference will not occur in a particular installation.

This device complies with part 15 of the FCC Rules. Operation is subject to the following two conditions:

> (1) This device may not cause harmful interference, and (2) this device must accept any interference received, including interference that may cause undesired operation.

Changes or modifications not expressly approved by the party responsible for compliance could void the user's authority to operate the equipment.

Notice Regarding Radio Frequency Radiation Exposure

ClearSky CS550 complies with the FCC radio frequency exposure limits prescribed for mobile use (i.e,. antennas are greater than 20 cm from a person's body) in an uncontrolled environment. Consequently, a person within 20 cm (8 in) of a CS550 that is connected to machine battery power could expose that person to RF energy in excess of what has been established by the FCC RF exposure guidelines.

7.11.2 Innovation, Science and Economic Development (ISED)

Radio Frequency Interference Requirements

The ClearSky CS550 Class B digital apparatus complies with Canadian ICES-003. [Canada Compliance Label: CAN ICES-3 (B)/NMB-3(B)]

This device complies with Industry Canada license-exempt RSS standard (s). Operation is subject to the following two conditions:

> (1) This device may not cause harmful interference, and (2) this device must accept any interference received, including interference that may cause undesired operation.

Notice Regarding Radio Frequency Radiation Exposure

ClearSky CS550 complies with the ISED radio frequency exposure limits prescribed for mobile use (i.e,. antennas are greater than 20 cm from a person's body) in an uncontrolled environment. Consequently, a person within 20 cm (8 inches) of a CS550 that is connected to machine battery power could expose that person to RF energy in excess of what has been established by the ISED RF exposure guidelines.

7.12 SUPPLEMENTAL INFORMATION ONLY APPLICABLE TO CE/UKCA MACHINES

The following information is provided in accordance with the requirements of the European Machinery Directive 2006/42/EC or Supply of Machinery (Safety) Regulations 2008 No. 1597.

For electric powered machines, the A-Weighted emission sound pressure level at the work platform is less than 70dB(A).

The guaranteed Sound Power Level (LWA) per European Directive 2000/14/EC (Noise Emission in the Environment by Equipment for Use Outdoors) or Noise Emission in the Environment by Equipment for use Outdoors Regulations 2001 No. 1701 based on test methods in accordance with Annex III, Part B, Method 1 and 0 of the directive, is 102 dB(A) for machines equipped with Stage IIIA engines and 105 dB (A) for machines equipped with Stage V engines.

The vibration total value to which the hand-arm system is subjected does not exceed 2,5 m/s^2. The highest root mean square value of weighted acceleration to which the whole body is subjected does not exceed 0,5 m/s^2.

7.13 EC DECLARATION OF CONFORMITY

Manufacturer
JLG Industries, Inc.

Address
1 JLG Drive
McConnellsburg, PA 17233 USA

Technical File
JLG EMEA B.V.
Polaris avenue 63,
2132 JH Hoofddorp
The Netherlands

Contact/Position
Senior Manager — Product Safety & Reliability

Date/Place
Hoofddorp, Netherlands

Machine Type
Mobile Elevating Work Platform

Model Type
450AJ, 450AJ HC3, 520AJ, 520AJ HC3

EC-Number
2842

Certificate Number
KCEC4441

Notified Body
Kuiper Certificering b.v.

Address
Van Slingelandtstsraat 75, 7331 NM
Apeldoorn, The Netherlands

Reference Standards

- EN 55011:2009/A1:2010
- EN 61000-6-2:2005
- EN 60204-1:2018
- EN 280:2013+ A1:2015
- EN ISO 12100:2010

JLG Industries, Inc. hereby declares that the above mentioned machine conforms with the requirements of:

- 2006/42/EC — Machinery Directive
- 2014/30/EU — EMC Directive
- 2014/53/EU — RED Directive (If fitted with optional equipment)
- 2000/14/EC — Outdoor Noise Directive

Note: This declaration conforms with the requirements of annex II-A of the council directive 2006/42/EC. Any modification of the above described machine violates the validity of this declaration.

7.14 UKCA DECLARATION OF CONFORMITY

Manufacturer
JLG Industries, Inc.

Address
1 JLG Drive
McConnellsburg, PA 17233 USA

Technical File
JLG Industries UK Ltd
Braunstone Frith Industrial Estate
Unit 3 Sunningdale Road
Leicester, LE3 1UX
United Kingdom

Contact/Position
Director of Engineering — Europe

Date/Place
Leicester, United Kingdom

Machine Type
Mobile Elevating Work Platform

Model Type
450AJ, 450AJ HC3, 520AJ, 520AJ HC3

AB-Number
0463

Certificate Number
AVUK4441

Approved Body
Amtri Veritas

Address
Pierce Street, Macclesfield, SK11 6ER, England

Reference Standards

- EN 55011:2009/A1:2010
- EN 61000-6-2:2005
- EN 60204-1:2018
- EN 280:2013+ A1:2015
- EN ISO 12100:2010

JLG Industries, Inc. hereby declares that the above mentioned machine conforms with the requirements of:

- 2008 No. 1597 - Supply of Machinery (Safety) Regulations 2008
- 2016 No. 1091 - Electromagnetic Compatibility Regulations 20165
- 2017 No. 1206 - Radio Equipment Regulations 2017 (if fitted with optional equipment)
- 2001 No. 1701 - Noise Emission in the Environment by Equipment for use Outdoors Regulations 2001

Note: This declaration conforms with the requirements of annex II-A of the Regulations 2008 No. 1597. Any modification of the above described machine violates the validity of this declaration.

This Page is intentionally left blank

Serial Number _____

Date	Comments



Corporate Office
JLG Industries, Inc.
1 JLG Drive
McConnellsburg, PA 17233-9533 USA
(717) 485-5161 (Corporate)
(877) 554-5438 (Customer Support)
(717) 485-6417

Visit our website for JLG Worldwide Locations.
www.jlg.com



OSHKOSH™