Operation & Safety Manual

Original Instructions -
Keep this manual with the machine at all times.

Model 1230ES

PVC 2202

31219982

February 14, 2022 - Rev A

ANSI CE UK CA
AZ/NZS MOL70

An Oshkosh Corporation Company

⚠ WARNING

Operating, servicing and maintaining this vehicle or equipment can expose you to chemicals including engine exhaust, carbon monoxide, phthalates, and lead, which are known to the State of California to cause cancer and birth defects or other reproductive harm. To minimize exposure, avoid breathing exhaust, do not idle the engine except as necessary, service your vehicle or equipment in a well-ventilated area and wear gloves or wash your hands frequently when servicing. For more information go to www.P65Warnings.ca.gov.

FOREWORD

The Mobile Elevating Work Platform (MEWP) models covered in this manual are designed and tested to meet or exceed various compliance standards. Please refer to the manufacturer's nameplate affixed to the subject MEWP for specific standard compliance information.

This manual is a very important tool! Keep it with the machine at all times.

The purpose of this manual is to provide owners, users, operators, lessors, and lessees with the precautions and operating procedures essential for the safe and proper machine operation for its intended purpose.

Due to continuous product improvements, JLG Industries, Inc. reserves the right to make specification changes without prior notification. Contact JLG Industries, Inc. for updated information.

Refer to www.JLG.com for Warranty, Product Registration, and other machine-related documentation.

SAFETY ALERT SYMBOLS AND SAFETY SIGNAL WORDS



This is the Safety Alert Symbol. It is used to alert you to the potential personal injury hazards. Obey all safety messages that follow this symbol to avoid possible injury or death.

⚠ DANGER

Indicates an imminently hazardous situation. If not avoided, will result in serious injury or death. This decal will have a red background.

⚠ WARNING

Indicates a potentially hazardous situation. If not avoided, could result in serious injury or death. This decal will have an orange background.

⚠ CAUTION

Indicates a potentially hazardous situation. If not avoided, may result in minor or moderate injury. It may also alert against unsafe practices. This decal will have a yellow background.

NOTICE

Indicates information or a company policy that relates directly or indirectly to the safety of personnel or protection of property.

⚠ WARNING

This product must comply with all safety related bulletins. Contact JLG Industries, Inc. or the local authorized JLG representative for information regarding safety related bulletins which may have been issued for this product.

NOTICE

JLG Industries, Inc. sends safety related bulletins to the owner of record of this machine. Contact JLG Industries, Inc. to ensure that the current owner records are updated and accurate.

NOTICE

JLG Industries, Inc. must be notified immediately in all instances where JLG products have been involved in an accident involving bodily injury or death or when substantial damage has occurred to personal property or the JLG product.

For:

- Accident Reporting
- Product Safety Publications
- Current Owner Updates
- Questions Regarding Product Safety
- Standards and Regulations Compliance Information
- Questions Regarding Special Product Applications
- Questions Regarding Product Modifications

Contact:

Product Safety and Reliability Department
JLG Industries, Inc.
13224 Fountainhead Plaza
Hagerstown, MD 21742
USA
or Visit www.jlg.com to find your local JLG office.

In USA:

Toll Free: 877-JLG-SAFE (877-554-7233)

Outside USA:

Phone: 240-420-2661
Fax: 301-745-3713
E-mail: ProductSafety@JLG.com

REVISION LOG

DATE	REVISION	DESCRIPTION
February 14, 2022	A	Original Issue

This Page is intentionally left blank

SECTION CONTENTS

Section	Subject	Page
FOREWORD		**3**
REVISION LOG		**7**
SECTION 1		
SAFETY PRECAUTIONS		**11**
1.1	General	11
1.2	Pre-Operation	11
1.3	Operation	13
1.4	Towing, Lifting, and Hauling	19
1.5	Maintenance	19
SECTION 2		
USER RESPONSIBILITIES, MACHINE PREPARATION, AND INSPECTION		**23**
2.1	Personnel Training	23
2.2	Preparation, Inspection, and Maintenance	25
2.3	Pre-Start Inspection	25
2.4	Walk-Around Inspection	27
2.5	Function Check	28
SECTION 3		
MACHINE CONTROLS AND INDICATORS		**31**
3.1	General	31
3.2	Controls and Indicators	31
3.3	Decal Installation	40
SECTION 4		
MACHINE OPERATION		**43**
4.1	Description	43
4.2	Operating Characteristics and Limitations	43
4.3	Platform Loading	43
4.4	Battery Charging	44
4.5	AC Inverter Operation (Option)	45

4.6 Operation 46
4.7 Raising and Lowering Platform 47
4.8 Steering and Traveling 50
4.9 Tie Down/Lift Lugs 52
4.10 Towing 54
4.11 Programmable Security Lock (PSL™) (Option) 56

SECTION 5
EMERGENCY PROCEDURES 59

5.1 General Information 59
5.2 Emergency Operation 59
5.3 Platform Manual Descent 60
5.4 Incident Notification 61

SECTION 6
GENERAL SPECIFICATIONS AND OPERATOR MAINTENANCE 63

6.1 Introduction 63
6.2 Other Publications Available 63
6.3 Operating Specifications 63
6.4 Lubrication 66
6.5 Operator Maintenance 68
6.6 Battery Maintenance 70
6.7 Tires and Wheels 70
6.8 Diagnostic Trouble Codes (DTC) 72
6.9 Diagnostic Trouble Codes (DTC) Check Tables 72
6.10 Supplemental Information Only Applicable to CE/UKCA Machines 86
6.11 EC Declaration of Conformity 87
6.12 UKCA Declaration of Conformity 88

SECTION 1
Safety Precautions

1.1 GENERAL

This section outlines the necessary precautions for proper and safe machine usage and maintenance. In order to promote proper machine usage, it is mandatory that a daily routine is established based on the content of this manual. A maintenance program, using the information provided in this manual and the Service and Maintenance Manual, must also be established by a qualified person and must be followed to ensure that the machine is safe to operate.

The owner/user/operator/lessor/lessee of the machine should not accept operating responsibility until this manual has been read, training is accomplished, and operation of the machine has been completed under the supervision of an experienced and qualified operator.

These sections contain the responsibilities of the owner, user, operator, lessor, and lessee concerning safety, training, inspection, maintenance, application, and operation. If there are any questions with regard to safety, training, inspection, maintenance, application, and operation, please contact JLG Industries, Inc. ("JLG").

⚠ WARNING

Failure to comply with the safety precautions listed in this manual could result in machine damage, property damage, personal injury or death.

1.2 PRE-OPERATION

1.2.1 Operator Training and Knowledge

- Read, understand, and study the Operation and Safety Manual in its entirety before operating the machine. For clarification, questions, or additional information regarding any portions of this manual, contact JLG Industries, Inc.

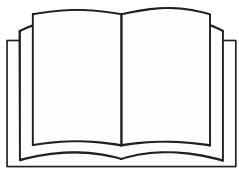

- Only personnel who have received proper training regarding the inspection, application and operation of MEWPs (including recognition and avoiding hazards associated with their operation) shall be authorized to operate a MEWP.
- Only properly trained personnel who have received unit specific familiarization shall operate a MEWP. The user shall determine if personnel are qualified to operate the MEWP prior to operation.

- Read, understand, and obey all DANGERS, WARNINGS, CAUTIONS, and operating instructions on the machine and in this manual.
- Ensure that the machine is to be used in a manner which is within the scope of its intended application as determined by JLG.
- All operating personnel must have a thorough understanding of the intended purpose and function of the MEWP controls, including platform, ground and emergency descent controls.
- Read, understand, and obey all applicable employer, local, and governmental regulations as they pertain to your utilization and application of the machine.

1.2.2 Workplace Inspection

- Precautions to avoid all hazards in the work area must be taken by the user before and during operation of the machine.
- Do not operate or raise the platform from a position on trucks, trailers, railway cars, floating vessels, scaffolds or other equipment unless the application is approved in writing by JLG.
- Before operation, check work area for overhead hazards such as electric lines, bridge cranes, and other potential overhead obstructions.
- Check operating surfaces for holes, bumps, drop-offs, obstructions, debris, concealed holes, and other potential hazards.
- Check the work area for hazardous locations. Do not operate the machine in hazardous environments unless approved for that purpose by JLG.
- Ensure that the ground conditions are adequate to support the maximum tire load indicated on the tire load decals located on the chassis adjacent to each wheel. Do not travel on unsupported surfaces.
- This machine can be operated in nominal ambient temperatures of 0° F to 104° F (-20° C to 40° C). Consult JLG to optimize operation outside of this temperature range.

1.2.3 Machine Inspection

- Do not operate this machine until the inspections and functional checks have been performed as specified in *Section — User Responsibilities, Machine Preparation And Inspection* of this manual.
- Do not operate this machine until it has been serviced and maintained according to the maintenance and inspection requirements as specified in the machine's Service and Maintenance Manual.
- Ensure all safety devices are operating properly. Modification of these devices is a safety violation.

⚠ WARNING

Modification or alteration of a MEWP shall be made only with prior written permission from the manufacturer.

- Do not operate any machine on which the safety or instruction placards or decals are missing or illegible.
- Check the machine for modifications to original components. Ensure that any modifications have been approved by JLG.
- Avoid accumulation of debris on platform floor. Keep mud, oil, grease, and other slippery substances from footwear and platform floor.

1.3 OPERATION

1.3.1 General

- Do not use the machine for any purpose other than positioning personnel, their tools, and equipment.
- Before operation, the user must be familiar with the machine capabilities and operating characteristics of all functions.
- Never operate a malfunctioning machine. If a malfunction occurs, shut down the machine. Remove the unit from service and notify the proper authorities.
- Do not remove, modify, or disable any safety devices.
- Never slam a control switch or lever through neutral to an opposite direction. Always return switch to neutral and stop before moving the switch to the next function. Operate controls with slow and even pressure.
- Hydraulic cylinders, other than the outrigger cylinders, should never be left at end of travel (fully extended or fully retracted) before shutdown or for long periods of time. Always "bump" control in opposite direction slightly when function reaches end of travel. This applies both to machines in operation or in the stowed position.
- Do not allow personnel to tamper with or operate the machine from the ground with personnel in the platform, except in an emergency.
- Do not carry materials directly on platform railing unless approved by JLG.
- When two or more persons are in the platform, the operator shall be responsible for all machine operations.
- Always ensure that power tools are properly stowed and never left hanging by their cord from the platform work area.
- Do not assist a stuck or disabled machine by pushing or pulling except by pulling at the chassis tie-down lugs.
- Stow platform assembly and shut off all power before leaving machine.

1.3.2 Trip and Fall Hazards

- JLG Industries, Inc. recommends that all persons in the platform wear a full body harness with a lanyard attached to an authorized lanyard anchorage point while operating this machine. For further information regarding fall protection requirements on JLG products, contact JLG Industries, Inc.



- Prior to operation, ensure all gates and rails are fastened and secured in their proper position. Identify the designated lanyard anchorage point (s) at the platform and securely attach the lanyard. Attach only one (1) lanyard per lanyard anchorage point
- Use extreme caution when entering or leaving platform. Ensure that the platform assembly is fully lowered. Face the machine when entering or leaving the platform. Always maintain “three point contact” with the machine, using two hands and one foot or two feet and one hand at all times during entry and exit.

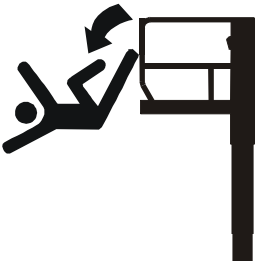

- Keep both feet firmly positioned on the platform floor at all times. Never position ladders, boxes, steps, planks, or similar items on unit to provide additional reach for any purpose.
- Keep oil, mud, and slippery substances cleaned from footwear and the platform floor.

1.3.3 Electrocution Hazards

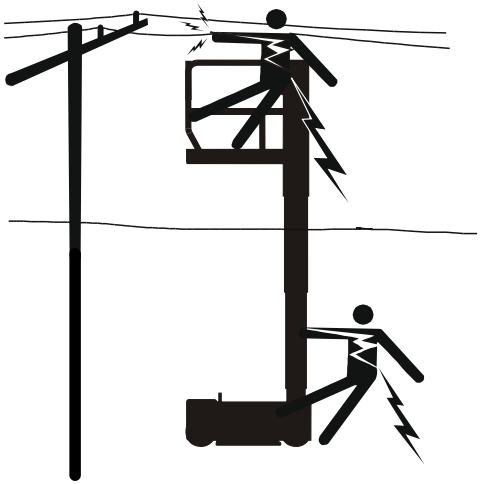

- This machine is not insulated and does not provide protection from contact or proximity to electrical current.
- It is not recommended to use the machine during lightning. To prevent injury or machine damage if lightning occurs during operation, lower the platform and shut down the machine in a safe and secure location.
- Maintain distance from electrical lines, apparatus, or any energized (exposed or insulated) parts according to the Minimum Approach Distance (MAD) as shown in *Table — Minimum Approach Distances (M.A.D.), page 15*.
- Allow for machine movement and electrical line swaying.

Table 1. Minimum Approach Distances (M.A.D.)

Voltage Range (Phase to Phase)	MINIMUM APPROACH DISTANCE in Feet (Meters)
0 to 50 KV	10 (3)
Over 50KV to 200 KV	15 (5)
Over 200 KV to 350 KV	20 (6)
Over 350 KV to 500 KV	25 (8)
Over 500 KV to 750 KV	35 (11)
Over 750 KV to 1000 KV	45 (14)
Note: This requirement shall apply except where employer, local or govern- mental regulations are more stringent.	

- Maintain a clearance of at least 10 ft. (3m) between any part of the machine and its occupants, their tools, and their equipment from any electrical line or apparatus carrying up to 50,000 volts. One foot additional clearance is required for every additional 30,000 volts or less.
- The minimum approach distance may be reduced if insulating barriers are installed to prevent contact, and the barriers are rated for the voltage of the line being guarded. These barriers shall not be part of (or attached to) the machine. The minimum approach distance shall be reduced to a distance within the designed working dimensions of the insulating barrier. This determination shall be made by a qualified person with respect to electrical transmission and distribution in accordance with the employer, local, or governmental requirements for work practices near energized equipment.

⚠ DANGER

Do not maneuver machine or personnel inside prohibited zone (MAD). Assume all electrical parts and wiring are energized unless known otherwise.

1.3.4 Tipping Hazards

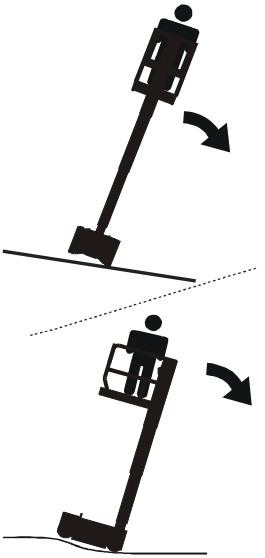

- Ensure that the ground conditions are adequate to support the maximum tire load indicated on the tire load decals located on the chassis adjacent to each wheel. Do not travel on unsupported surfaces.
- The user should be familiar with the operating surface before driving. Do not exceed the allowable side slope and grade while driving.

- Do not elevate platform or drive with platform elevated while on or near a sloping, uneven, or soft surface. Ensure machine is positioned on a smooth, firm surface within the limits of the maximum operating slope before elevating platform or driving with the platform in the elevated position.
- Before driving on floors, bridges, trucks, and other surfaces, check allowable capacity of the surfaces.
- Never exceed the maximum work load as specified on the platform. Keep all loads within the confines of the platform, unless authorized by JLG.
- Keep the chassis of the machine a minimum of 2 ft (0.6 m) from holes, bumps, drop-offs, obstructions, debris, concealed holes, and other potential hazards at the ground level.
- Never attempt to use the machine as a crane. Do not tie-off machine to any adjacent structure. Never attach wire, cable, or any similar items to platform.
- Do not operate the machine when wind conditions, including gusts, exceed specifications shown in the Machine Specifications and Operator Maintenance section. Refer to *Table — Beaufort Scale (For Reference Only), page 17*. Factors affecting wind speed are platform elevation, surrounding structures, local weather events, and approaching storms.
- Do not cover the platform sides or carry large surface-area items in the platform when operating outdoors. The addition of such items increases the exposed wind area of the machine.
- Do not increase the platform size with unauthorized deck extensions or attachments.
- If mast assembly or platform is caught so that one or more wheels are off the ground, all persons must be removed before attempting to free the machine. Use cranes, forklift trucks, or other appropriate equipment to stabilize machine and remove personnel.

Table 2. Beaufort Scale (For Reference Only)

Beaufort Number	Wind Speed		Description	Land Conditions
	mph	m/s		
0	0	0-0.2	Calm	Calm. Smoke rises vertically
1	1-3	0.3-1.5	Light air	Wind motion visible in smoke
2	4-7	1.6-3.3	Light breeze	Wind felt on exposed skin. Leaves rustle
3	8-12	3.4-5.4	Gentle breeze	Leaves and smaller twigs in constant motion
4	13-18	5.5-7.9	Moderate breeze	Dust and loose paper raised. Small branches begin to move.
5	19-24	8.0-10.7	Fresh breeze	Smaller trees sway.
6	25-31	10.8-13.8	Strong breeze	Large branches in motion. Flags waving near horizontal. Umbrella use becomes difficult.

Table 2. Beaufort Scale (For Reference Only) (continued)

Beaufort Number	Wind Speed		Description	Land Conditions
	mph	m/s		
7	32-38	13.9-17.1	Near Gale/Moderate Gale	Whole trees in motion. Effort needed to walk against the wind.
8	39-46	17.2-20.7	Fresh Gale	Twigs broken from trees. Cars veer on road.
9	47-54	20.8-24.4	Strong Gale	Light structure damage.

1.3.5 Crushing and Collision Hazards

- Approved head gear must be worn by all operating and ground personnel.
- Keep hands and limbs off of the mast assembly during operation.
- Watch for obstructions around machine and overhead when driving. Check clearances above, on sides, and bottom of platform when lifting or lowering platform.



- During operation, keep all body parts inside platform railing.
- Always post a lookout when driving in areas where vision is obstructed.
- Keep non-operating personnel at least 6 ft. (1.8m) away from machine during all driving operations.
- Under all travel conditions, the operator must limit travel speed according to conditions of ground surface, congestion, visibility, slope, location of personnel, and other factors causing hazards of collision or injury to personnel.
- Be aware of stopping distances in all drive speeds. When driving in high speed, switch to low speed before stopping. Travel grades in low speed only.
- Do not use high speed drive in restricted or close quarters or when driving in reverse.

- Exercise extreme caution at all times to prevent obstacles from striking or interfering with operating controls and persons in the platform.
- Ensure that operators of other overhead and floor level machines are aware of the MEWP's presence. Disconnect power to overhead cranes.
- Avoid operating over ground personnel. Warn personnel not to work, stand, or walk under a raised platform. Position barricades on floor as necessary.

1.4 TOWING, LIFTING, AND HAULING

- Never allow personnel in platform while towing, lifting, or hauling.
- This machine should not be towed, except in the event of emergency, malfunction, power failure, or loading/unloading. Refer to emergency towing procedures.
- Ensure platform is fully retracted and completely empty of tools prior to towing, lifting or hauling.
- When lifting machine with a forklift, position forks only at designated areas of the machine. Lift with a forklift of adequate capacity.
- Refer to *Section — Machine Operation* for lifting information.

1.5 MAINTENANCE

This sub-section contains general safety precautions which must be observed during maintenance of this machine. Additional precautions to be observed during machine maintenance are inserted at the appropriate points in this manual and in the Service and Maintenance Manual. It is of utmost importance that maintenance personnel pay strict attention to these precautions to avoid possible injury to personnel or damage to the machine or property. A maintenance program must be established by a qualified person and must be followed to ensure that the machine is safe.

1.5.1 Maintenance Hazards

- Shut off power to all controls and ensure that all moving parts are secured from inadvertent motion prior to performing any adjustments or repairs.
- Never work under an elevated platform until it has been fully lowered to the full down position, if possible, or otherwise supported and restrained from movement with appropriate safety props, blocking, or overhead supports.
- Always relieve hydraulic pressure from all hydraulic circuits before loosening or removing hydraulic components.
- DO NOT attempt to repair or tighten any hydraulic hoses or fittings while the machine is powered on or when the hydraulic system is under pressure.

- DO NOT use your hand to check for leaks. Use a piece of cardboard or paper to search for leaks. Wear gloves to help protect hands from spraying fluid.

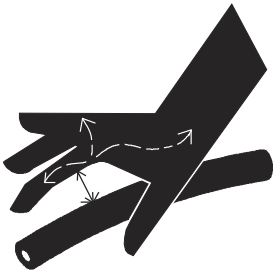

- Use only replacement parts or components that are approved by JLG. To be considered approved, replacement parts or components must be identical or equivalent to original parts or components.
- Never attempt to move heavy parts without the aid of a mechanical device. Do not allow heavy objects to rest in an unstable position. Ensure adequate support is provided when raising components of the machine. Use only approved non-flammable cleaning solvents.
- Use only approved non-flammable cleaning solvents.
- Do not replace items critical to stability, such as batteries or solid tires, with items of different weight or specification. Do not modify the MEWP in any way to affect stability.
- Refer to the Service and Maintenance Manual for the weights of critical stability items.

⚠ WARNING

Modification or alteration of a MEWP shall be made only with prior written permission from the manufacturer.

1.5.2 Battery Hazards

- Always disconnect batteries when servicing electrical components or when performing welding on the machine.
- Do not allow smoking, open flame, or sparks near battery during charging or servicing.
- Do not contact tools or other metal objects across the battery terminals.
- Always wear hand, eye, and face protection when servicing batteries. Ensure that battery acid does not come in contact with skin or clothing.

⚠ CAUTION

Battery fluid is highly corrosive. Avoid contact with skin and clothing at all times. Immediately rinse any contacted area with clean water and seek medical attention.

- Charge batteries only in a well ventilated area.
- Avoid overfilling the battery fluid level. Add distilled water to batteries only after the batteries are fully charged.

This Page is intentionally left blank

SECTION 2
User Responsibilities, Machine Preparation, and Inspection

2.1 PERSONNEL TRAINING

The Mobile Elevating Work Platform (MEWP) is a personnel handling device; so it is necessary that it be operated and maintained only by trained personnel.

Persons under the influence of drugs or alcohol or who are subject to seizures, dizziness or loss of physical control must not operate this machine.

2.1.1 Operator Training

Operator training must cover:

1. Reading and understanding the Operation and Safety Manual.
2. Thorough understanding of the intended purpose and function of the MEWP controls, including platform, ground, and emergency descent controls.
3. Control labels, instructions, and warnings on the machine.
4. Applicable regulations, standards, and safety rules.
5. Use of approved fall protection equipment.
6. Enough knowledge of the mechanical operation of the machine to recognize a malfunction or potential malfunction.
7. The safest means to operate the machine where overhead obstructions, other moving equipment, and obstacles, depressions, holes, and drop-offs exist.
8. Selection of the appropriate MEWP and available options for the work to be performed considering specific job requirements, with involvement from the MEWP owner, user, and/or supervisor.
9. The responsibility of the operator to ensure all platform occupants have a basic level of knowledge to work safely on the MEWP, and to inform them of applicable regulations, standards, and safety rules.
10. The requirement for familiarization in addition to training.

2.1.2 Training Supervision

Training must be delivered by a qualified person in an open area, free of hazards until the trainee has demonstrated the ability to safely control and operate the machine.

2.1.3 Operator Responsibility

The operator must be instructed that they have the responsibility and authority to shut down the machine in case of a malfunction or other unsafe condition of either the machine or the job site.

2.1.4 Machine Familiarization

Note: Responsibilities for familiarization may vary by region.

Only properly trained personnel who have received unit-specific familiarization shall operate a MEWP. The user shall determine if personnel are qualified to operate the MEWP prior to operation. The user shall ensure that after familiarization, the operator operates the MEWP for a sufficient period of time to achieve proficiency. When authorized by the user, self-familiarization can be achieved, if authorized, by a properly trained operator reading, understanding and following the manufacturer's operator's manual.

Prior to users authorization of an operator to use a specific model of MEWP, the user shall ensure the operator is familiarized on the following:

1. Location of the manual storage compartment and the requirement to ensure the required manual(s) are present on the MEWP;
2. Purpose and function of the machine controls and indicators at the platform and ground control stations;
3. Purpose, location, and function of the emergency controls;
4. Operating characteristics and limitations;
5. Features and devices;
6. Accessories and optional equipment.

2.2 PREPARATION, INSPECTION, AND MAINTENANCE

The following table covers the machine inspections and maintenance recommended by JLG Industries, Inc. Consult local regulations for further requirements for MEWPs. Frequency of inspections and maintenance must be increased as necessary when machine is used in a harsh or hostile environment, if machine is used with increased frequency, or if machine is used in a severe manner.

Table 3. Inspection and Maintenance Table

TYPE	FREQUENCY	PRIMARY RESPONSIBILITY	SERVICE QUALIFICATION	REFERENCE
Pre-Start Inspection	Before using each day; or whenever there's an Operator change.	User or Operator	User or Operator	Operation and Safety Manual
Pre-Delivery Inspection (See *Note* Below)	Before each sale, lease, or rental delivery.	Owner, Dealer, or User	Qualified JLG Mechanic	Service and Maintenance Manual and applicable JLG inspection form
Frequent Inspection	In service for 3 months or 150 hours, whichever comes first; or Out of service for a period of more than 3 months; or Purchased used.	Owner, Dealer, or User	Qualified JLG Mechanic	Service and Maintenance Manual and applicable JLG inspection form
Annual Machine Inspection	Annually, no later than 13 months from the date of prior inspection.	Owner, Dealer, or User	Factory-Trained Service Technician (Recommended)	Service and Maintenance Manual and applicable JLG inspection form
Preventative Maintenance	At intervals as specified in the Service and Maintenance Manual.	Owner, Dealer, or User	Qualified JLG Mechanic	Service and Maintenance Manual

Note: Inspection forms are available from JLG. Use the Service and Maintenance Manual to perform inspections.

NOTICE

JLG Industries, Inc. recognizes a factory trained service technician as a person who has successfully completed the JLG service training school for the specific JLG product model.

2.3 PRE-START INSPECTION

The Pre-Start Inspection should include each of the following:

1. **Cleanliness** – Check all surfaces for leakage (oil or battery fluid) or foreign objects. Report any leakage to the proper maintenance personnel.

2. **Structure** - Inspect the machine structure for dents, damage, weld or parent metal cracks or other discrepancies.

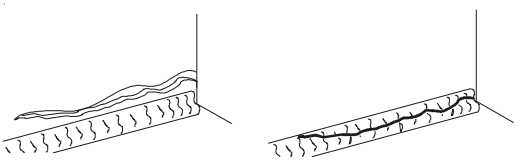

Parent Metal Crack Weld Crack

3. **Decals and Placards** – Check all for cleanliness and legibility. Make sure none of the decals and placards are missing. Make sure all illegible decals and placards are cleaned or replaced.

4. **Operators and Safety Manuals** - Check that a copy of the Operator and Safety Manual is enclosed in the weather resistant storage container.

5. **"Walk-Around" Inspection** – Refer to *Figure — Daily Walk-Around Inspection (Shown Top View Cutaway)*.

6. **Battery** – Charge as required.

7. **Fluid Levels** - Check the hydraulic oil level in the pump reservoir.

8. **Accessories/Attachments** - Reference the Operator and Safety Manual of each attachment or accessory installed upon the machine for specific inspection, operation, and maintenance instructions.

9. **Function Check** – Once the "Walk-Around" Inspection is complete, perform a functional check of all systems in an area free of overhead and ground level obstructions. Refer to *Section — Machine Operation* for more specific instructions on the operation of each function.

2.4 WALK-AROUND INSPECTION

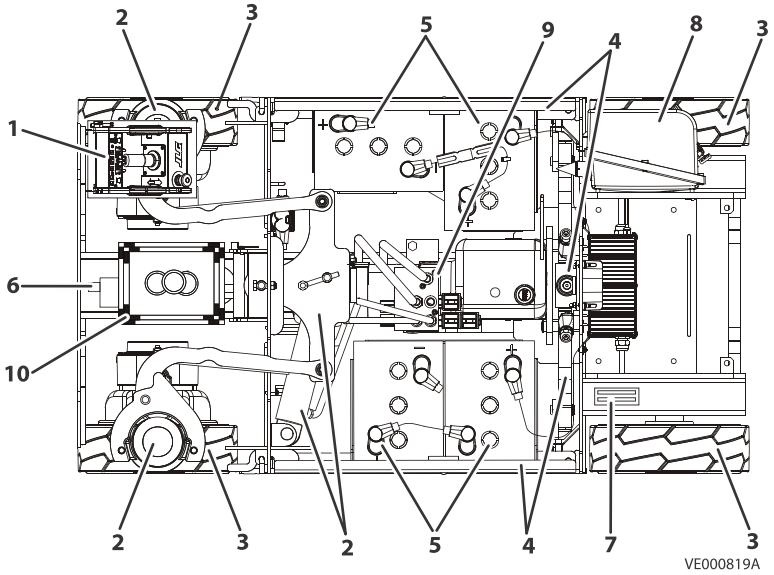

Begin the Walk-Around Inspection at Item 1, as noted on the diagram. Continue checking each item in sequence for the conditions listed in the following checklist.

⚠ WARNING

To avoid possible injury, be sure machine power is off.

Do not operate until all malfunctions have been corrected.

NOTICE

Do not overlook visual inspection of chassis underside. Checking this area often results in discovery of conditions which could cause extensive machine damage.

INSPECTION NOTE: On all components, make sure there are no loose or missing parts, that they are securely fastened, and that no visible damage, leaks or excessive wear exists in addition to any other criteria mentioned.

1. **Platform Control Console** - Placard secure and legible, control lever and switches return to neutral, and emergency stop switch function properly, manual in storage box.

2. **Front Wheel** - Drive motor, steer linkage, and steer cylinder - (open side access door) - Refer to Inspection Note.

3. **Wheels and Tires** - Properly secured, no missing lug nuts. Refer to *Section — Tires And Wheels*. Inspect wheels for damage and corrosion.
4. **Pothole Protection System** - Refer to Inspection Note.
5. **Battery Compartment** - Refer to Inspection Note.
6. **Manual Descent** - Refer to Inspection Note.
7. **Beacon** - Refer to Inspection Note.
8. **Ground Controls** - Placard secure and legible, control switches return to neutral position, emergency stop switch functions properly. Control markings legible.
9. **Hydraulic Pump/Motor, Control Valve Installation** - No unsupported wires or hoses; no damaged or broken wires - Refer to Inspection Note.
10. **Mast Assembly** - Refer to Inspection Note.
11. **Platform/Handrail/Gate Installation** (Not Shown) - Refer to Inspection Note.

2.5 FUNCTION CHECK

Perform the Function Check as follows:

1. From the **Ground Control Panel** with no load in the platform:
   a. Check if the platform/off/ground selector switch and the platform lift-up/lift-down switch operate properly.
   b. Check that Pot-Hole-Protection system operates properly, platform raised - bars down, platform down - bars up.

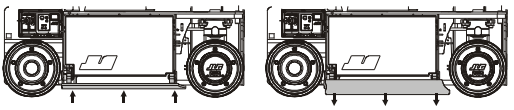

   c. Ensure that all machine functions are disabled when the Emergency Stop Button is depressed.
   d. With platform raised a few feet (meters), check if the manual descent valve (located at the base of the mast on the front of the machine), lowers the platform properly.

2. From the **Platform Control Console:**
   a. Ensure that the control console is firmly secured in the proper location.
   b. Check that all guards protecting switches are in place.
   c. Operate all functions, drive/lift mode select switch, horn button, enable trigger, and joystick functions to ensure proper operation.
   d. With the platform elevated 23 in. to 26 in. (58cm to 66cm) or more on a smooth, firm, and level surface, drive the machine to check if the high drive cutout speed-limit is engaged. Drive speed will be reduced from a top speed of 3mph (4.8 kph) to 0.5 mph (0.8 kph).
   e. Ensure that all machine functions are disabled when the Emergency Stop Button depressed.
3. With the platform in the transport (stowed) position.
   a. Drive the machine on a grade, not to exceed the rated gradeability, and stop to ensure the brakes hold.
   b. Check the tilt indicator light/alarm to ensure proper operation. The light/alarm should be activated when tilted at or beyond the values in *Table — Tilt Cutout Settings, page 29*.

Table 4. Tilt Cutout Settings

1230ES	Tilt Setting (front to back)	Tilt Setting (side to side)
ANSI/CSA	3°	1.5°
AUS	3°	1.5°
CE/UKCA	3.4°	3.4°

Note: For Japanese specification machines labeled “Ministry of Labor Notification #70,” the Tilt Setting is 5 degrees (front to back and side to side) regardless of elevated platform height.

Note: When the tilt indicator warning is activated the following functions are affected; **ANSI/CE/UKCA/CSA/AUS Spec.** - Drive and Lift functions are disabled, platform must be lowered (stowed) to drive out of tilt condition.

This Page is intentionally left blank

SECTION 3
Machine Controls and Indicators

3.1 GENERAL

NOTICE

The manufacturer has no direct control over machine application and operation. The user and operator are responsible for conforming with good safety practices.

This section provides the necessary information needed to understand control functions.

3.2 CONTROLS AND INDICATORS

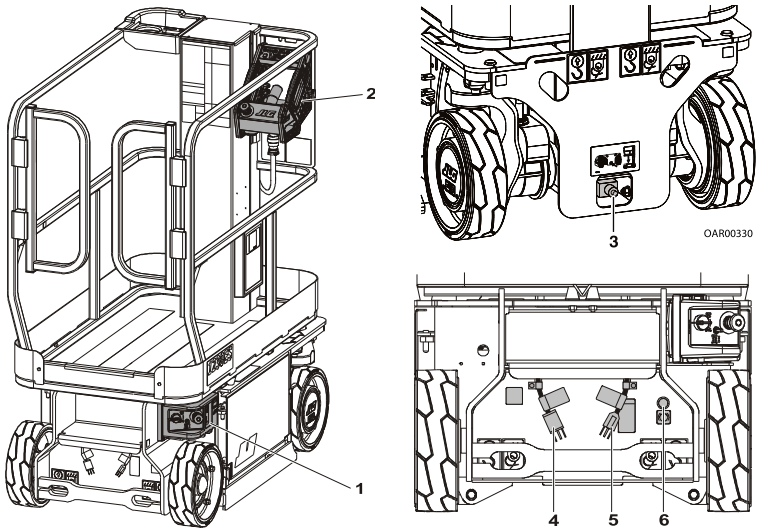

Figure 1. Location of Machine Controls.

1. Ground Control Station	3. Platform Manual Descent Valve	5. AC Plug - Battery Charger Input Plug
2. Platform Control Station	4. *AC Plug - To Platform AC Receptacle Outlet Box	6. Brake Release Button

* When equipped with the inverter/charger option, the AC plug (4) to the platform AC receptacle box outlet will be eliminated from the rear panel. The platform AC receptacle box outlet will be plugged directly into the inverter/charger internally. Also an inverter ON/STANDBY toggle switch will be mounted on the rear panel.

3.2.1 Ground Control Station

⚠ WARNING

Do not operate from ground control station with personnel in the platform except in an emergency.

To avoid serious injury, do not operate machine if platform lift/ lower switch does not return to the off or neutral position when released.

Perform as many pre-operational checks and inspections from the ground control station as possible.

NOTICE

When the machine is shut down for overnight parking or battery charging, the emergency stop and power select switches must be positioned to off to prevent draining the batteries.

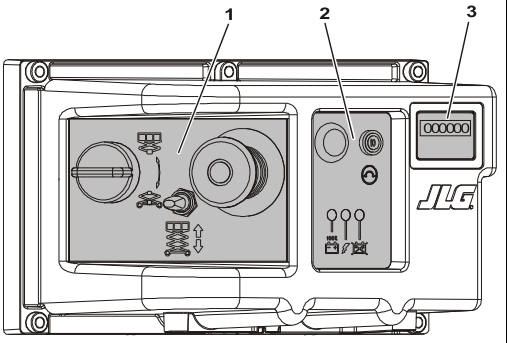

Figure 2. Ground Control Station

1. Ground Controls	2. Battery Charging - Status Indicators and Circuit Breaker	3. Hour Meter

3.2.2 Ground Controls

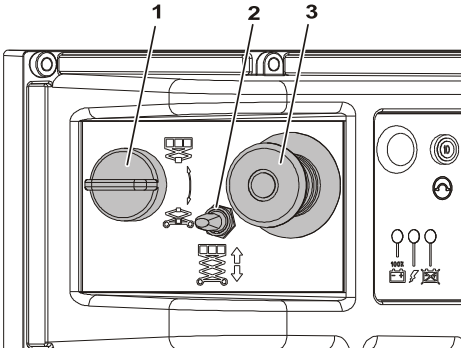

Figure 3. Ground Controls

1. Platform/Off/Ground Selector Switch	2. Platform Lift/Lower Switch	3. Emergency Stop Switch

1. **Platform/Off/Ground Selector Switch** - A three position, key-operated power select switch supplies operating power to the platform or ground controls and powers machine down in the off position.

2. **Platform Lift/Lower Switch** - A three position, momentary contact lift control switch provides raising and lowering of the platform when positioned to up or down.

3. **Emergency Stop Switch** - A two-position, red, mushroom- shaped emergency stop switch, when positioned to ON with the power selector switch positioned to ground, furnishes operating power to the ground control station. In addition, the switch can be used to turn off power to the function controls in the event of an emergency. Power is turned on by pulling the switch out, and is turned off by depressing switch.

3.2.3 Battery Charger/Hour Meter Indicators

1. **Battery Charger Status** - This panel, located to the right of the ground control box, is designed to give the operator an accurate read on the status of the battery charger.



GREEN - Charge Complete



YELLOW - Charging in Process



RED - Charging Abnormal

2. **10 Amp Circuit Breaker** - This circuit breaker protects the Ground Control Station in case of a short circuit or other malfunction in the ground controls circuit.

3. **Hour Meter** - The hour meter shows the total amount of lift operation time accumulated.

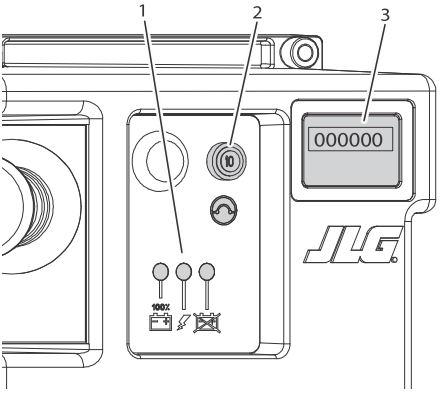

Figure 4. Battery Charger and Hour Meter Indicators

1. Battery Charging Status - GREEN/YELLOW/RED Indicators	2. 10 Amp Circuit Breaker	3. Hour Meter

Platform Manual Descent Valve

The platform manual descent valve is used in the event of total power failure to retract and lower the platform using gravity. The manual descent valve is located at the bottom of the mast assembly on the front of the machine inside an access hole. Look for the instruction decal located just above the access hole.

The procedure is as follows:

1. Locate the **manual descent valve (1)** on the front of the machine at the base of the mast.

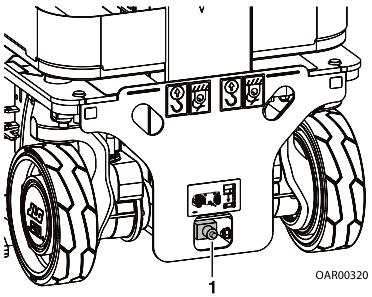

Figure 5. Location of Manual Descent Valve (Front of Machine)

⚠ WARNING

Keep hands and arms out of the path of the mast and platform while lowering.

2. Press and hold the RED button on the manual descent valve, release the button when the platform is lowered to desired level.

Brake Release Switch

Note: If the machine's batteries are completely depleted of electrical charge the brakes cannot be released electrically. The brakes must be released mechanically, see *Mechanical Brake Release*.

⚠ WARNING

Do not manually disengage the brakes unless the machine is setting on a level surface or the machine is fully restrained.

1. The **brake release switch (1)** is located on the **lower rear panel (2)** on the machine.

2. The machine must be powered ON to GROUND CONTROL MODE at the Platform/Off/Ground Selector Switch on the **Ground Control Station (3)** to operate the brake release switch.

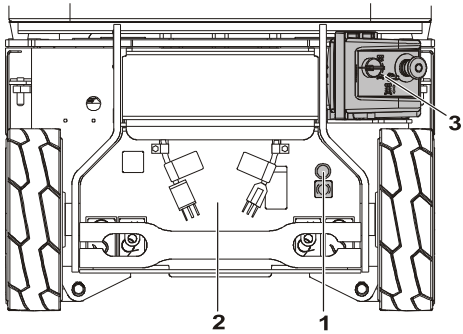

Figure 6. Location of Brake Release Switch (Rear of Machine)

3.2.4 Platform Control Station

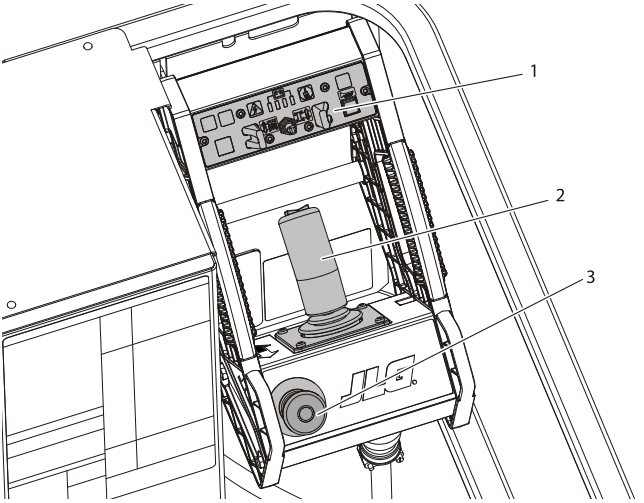

Figure 7. Platform Control Station.

1. Platform Control and Indicator Panel	2. Drive/Lift/Steer Joystick Control	3. Emergency Stop Switch

3.2.5 Platform Control and Indicator Panel

Note: The platform control and indicator panel uses different shaped symbols to alert the operator to different types of operational situations that could arise. The meaning of those symbols are explained below.



Tilt Indicator Warning Light Indicates a potentially hazardous situation, which if not corrected, could result in serious injury or death. This indicator will be red.



System Distress Indicator - Indicates an abnormal operating condition, which if not corrected, may result in machine interruption or damage. This indicator will be yellow. *(SEE *NOTE* BELOW)

Note: * This lamp when activated is flashing a DTC (Diagnostic Troubleshooting Code). For an explanation of these codes and items the Operator can or cannot correct, see *Section — General Specifications And Operator Maintenance*; *Sub - Section — Diagnostic Trouble Codes (DTC)*.

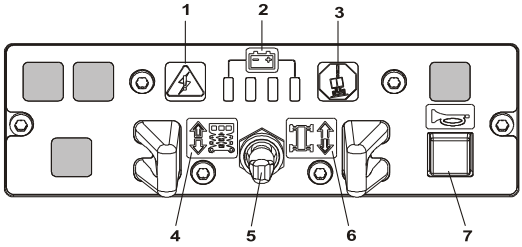

Figure 8. Platform Control/Indicator Panel

1. System Distress Indicator	4. Platform Lift Mode Indicator	7. Horn Button
2. Battery Discharge Indicator (BDI)	5. Lift or Drive Select Switch	
3. Tilt Indicator Warning Light	6. Drive Mode Indicator	

Note: The button and indicators shown shaded on the indicator panel are currently not used on the 1230ES machine.

⚠ WARNING

To avoid serious injury, do not operate machine if any control levers or toggle switches controlling any machine functions do not return to the off or neutral position when released.

1. **System Distress Indicator** - This indicator will light up with a fault flash code that indicate where a problem within the system exists.

2. **Battery Discharge Indicator (BDI)** - This set of lights is designed to let the operator know the condition of the batteries.

3. **Tilt Indicator Warning Light and Alarm** - A red warning light on the control panel illuminates and an audible alarm sounds when the chassis is at or beyond the permitted amount of slope.

⚠ WARNING

If The Tilt Indicator Warning Light/Alarm Is Activated When Platform Is Raised Lower Platform And Drive To A Firm Level Surface.

4. 5. 6. **Lift/Drive Select** - This toggle switch is used to select either drive or lift. After selecting a function, the controller must be moved in the proper direction in order to activate that function. This function must be selected with the joystick in the neutral position. Otherwise, the function select will not occur.

7. **Horn** - This push-button switch, when activated, permits the operator to warn job-site personnel when the machine is operating in the area

3.2.6 Drive/Lift/Steer Joystick Control

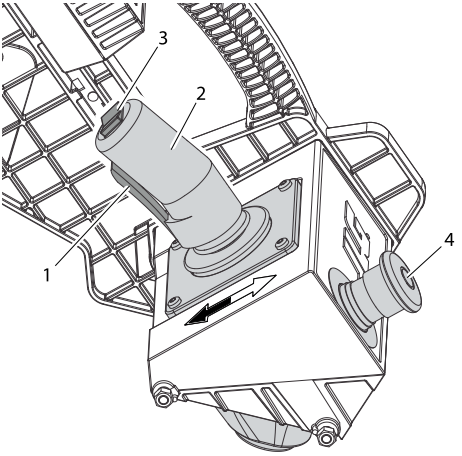

Figure 9. Platform Control Components

1. Trigger Switch	3. Steer Switch
2. Joystick Controller	4. Emergency Stop Switch

1. **Trigger Switch** - This switch is located on the front of the joystick controller. The trigger switch acts as an enable and must be depressed before operating the drive, steer and lift functions. When released, the function being operated will stop.

2. **Joystick Controller** - The control handle controls three functions: drive, lift, and steer.

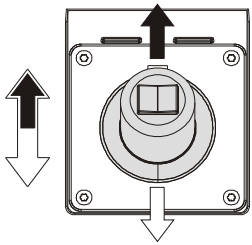

Drive - The drive function must be selected using the drive/lift selector switch (items 5 and 6 on the *Figure – Platform Control/Indicator panel , page 37*), prior to moving the control handle. After selecting the drive function, engage the trigger switch lever, then move the control handle forward to drive the machine forward or move the control handle backwards to drive the machine backward.
Lift - After selecting the lift function using the drive/ lift selector switch (item 4 and 5 on the *Figure — Platform Control/ Indicator panel, page 36*), engage the trigger switch lever, moving the control handle backward to raise the platform and moving the control handle forward will lower the platform.
The speed on all selected functions is proportionally controlled by the distance of travel of the hand controller from the center position.
Steer - The thumb-operated steer switch on top of the control handle activates the steer wheels in the direction activated (right or left).

3. **Steer Switch** - The steer switch is a thumb operated switch located at the top of the control handle. Depressing the switch to the right will steer the wheels to the right. Depressing the switch to the left will steer the wheels to the left.

4. **Emergency Stop Switch** - A two-position, red, mushroom- shaped emergency stop switch functions to provide power to the platform control station and also to turn off power to the platform function controls in the event of an emergency. With the Power selector switch positioned to platform, power is turned on by pulling the switch out (on), and is turned off by pushing the switch in (off).

3.3 DECAL INSTALLATION

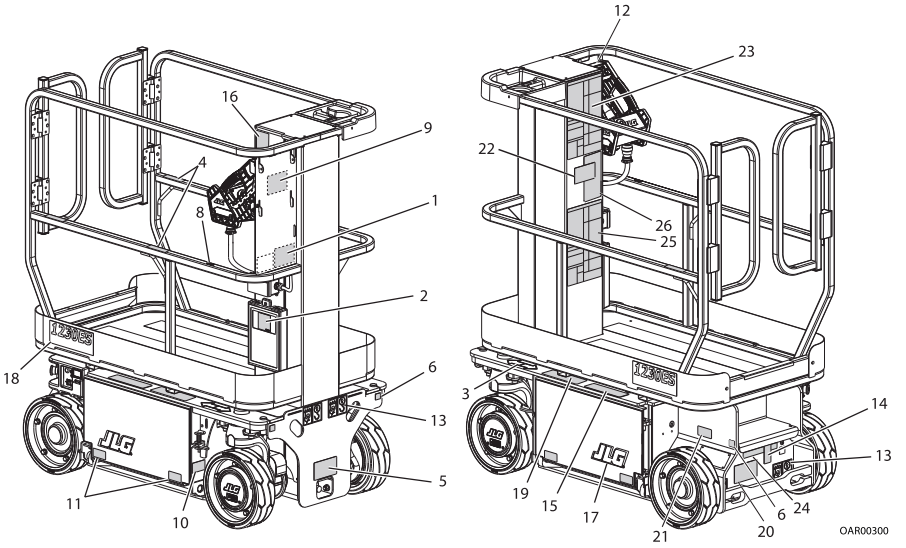

Figure 10. 1230ES - Decal Installation.

Table 5. 1230ES - Decal Installation Chart (See Figure — 1230ES - Decal Installation.)

ITEM	ANSI (ENG)	ANSI (ENG)/ (SPA)	ANSI (POR)/(SPA	(JPN)	ANSI (ENG)/ (CHI)	ANSI (ENG)/(KOR)	CE/UKCA	AUS	CSA (ENG)(FRE)
1	1001131270	1001131270	1001131270	1001131270	1001131270	1001131270	1001131270	1001131270	1001131270
2	1701640	1701640	1701640	1701640	1701640	1701640	1701640	1701640	1701640
3*	1703687	1703687	1703687	1703687	1703687	1703687	1703687	1703687	1703687
4*	1704277	1704277	1704277	1704277	1704277	1704277	1704277	1704277	1704277
5	1706670	1706670	1706670	1706670	1706670	1706670	1706670	1706670	1706670
6*	1706671	1706671	1706671	1706671	1706671	1706671	1706671	1706671	1706671
7	1706679	1706679	1706679	1706679	1706679	1706679	1706679	1706679	1706679
8	1703819	1703819	1703819	1703819	1703819	1703819	1703819	1703819	1703819
9	1705692	1705692	1705692	1705692	1705692	1705692	1705692	1705692	1705692
10	1706740	1706740	1706740	1706740	1706740	1706740	1706740	1706740	1706740
11*	1704016	1704016	1704016	1704016	1704016	1704016	1704016	1704016	1704016
12	1001092907	1001092907	1001092907	1001092907	1001092907	1001092907	1001092907	1001092907	1001092907
13	4110226	4110226	4110226	4110226	4110226	4110226	4110226	4110226	4110226
14	1703785	—	—	1705803	—	—	1705803	1705803	—
15*	1703786	1707143	1707144	1705099	1707146	1707158	1705099	1705099	1707145
16	1705686	1705720	1705726	—	1705946	1706057	—	—	1705723
17*	1705781	1705781	1705781	1705781	1705781	1705781	1705781	1705781	1705781
18*	1001271759	1001271759	1001271759	1001271759	1001271759	1001271759	1001271759	1001271759	1001271759

Table 5. 1230ES - Decal Installation Chart (See Figure — 1230ES - Decal Installation.) (continued)

ITEM	ANSI (ENG)	ANSI (ENG)/ (SPA)	ANSI (POR)/(SPA	(JPN)	ANSI (ENG)/ (CHI)	ANSI (ENG)/(KOR)	CE/UKCA	AUS	CSA (ENG)(FRE)
19*	1706832	1707140	1707139	1706078	1707142	1707157	1706078	1706078	1707141
20	1001223055	1001224049	1001224052	1001224053	1001224050	1001224048	—	—	1001223971
21	1001228370	—	—	—	—	—	—	—	1001228370
22	1001231801	—	—	—	—	—	—	—	1001254206
23	1001254206	1001254206	1001254208	1706686	1001254206	1001254206	1706686	—	—
24	—	1704339	1704341	—	1704344	1707022	—	—	1704340
25	—	1001254208	1001254209	—	1001254210	1001254211	—	—	1001254207
26	—	—	—	—	—	—	—	1001216596	—

* Identical item mounted on opposite side of the machine.

SECTION 4
Machine Operation

4.1 DESCRIPTION

This machine is a Mobile Elevating Work Platform (MEWP) on top of an elevating mast mechanism. The Lift's intended purpose is to position personnel with their tools and supplies at positions above ground level. The machine can be used to reach work areas located above machinery or equipment positioned at ground level.

This JLG Lift has a primary operator Control Station in the platform. From this Control Station, the operator can drive and steer the machine in both forward and reverse directions, raise and lower the platform. The machine is also equipped with a Ground Control Station which will override the Platform Control Station. Ground Controls operate lift up, down and emergency stop. Ground Controls are to be used only in an emergency to lower the platform to the ground should the operator in the platform be unable to do so.

4.2 OPERATING CHARACTERISTICS AND LIMITATIONS

4.2.1 General

A thorough knowledge of the operating characteristics and limitations of the machine is always the first requirement for any user, regardless of user's experience with similar types of equipment.

4.2.2 Placards

Important points to remember during operation are provided at the control stations by DANGER, WARNING, CAUTION, IMPORTANT, NOTICE, and INSTRUCTION placards. This information is placed at various locations for the express purpose of alerting personnel of potential hazards constituted by the operating characteristics and limitations of the machine. See foreword for definitions of placard safety signal words.

4.3 PLATFORM LOADING

The platform maximum rated load capacity is shown on a placard located on the platform and is based upon the machine positioned on a smooth, firm, and level surface. Refer to *Section — General Specifications and Operator Maintenance* specifications for the maximum platform capacity.

The platform is entered through the gates at the rear of the machine. The gates push inward when entering.

Note: **Australia machines** include a gate latch on both entry gates, press down on the latch release handles to open the gates, release handles to latch gates when closed.

Note: It is important to remember that the load should be evenly distributed on the platform. The load should be placed near the center of the platform when possible.

4.4 BATTERY CHARGING

Note: Be sure that machine is parked in a well ventilated area before charging begins.

⚠ DANGER

Only plug the charger into a properly installed and grounded outlet. Do not use ground adaptors or modify plug. Do not touch non-insulated portion of output connector or non-insulated battery terminal.

Do not operate charger if the AC supply cord is damaged or if the charger has received a sharp blow, been dropped, or otherwise damaged in any way.

Always disconnect the AC supply before making or breaking the (pos/neg) connections to the battery.

Do not open or disassemble charger.

1. The battery charger **AC input plug (1)** is located on the panel at the **lower rear of the machine (2)** just behind the tie-down bar.

2. Connect the charger **AC input plug (1)** to a grounded outlet using a 3 wire 12 AWG extension cord. (Maximum charger current draw is 12A RMA @ 108 VAC.)

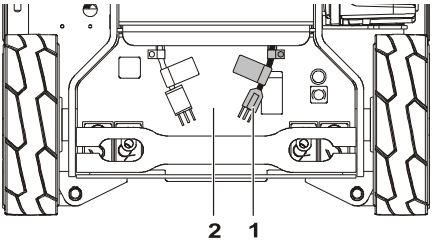

Figure 11. Location of Battery Charger AC Input Plug

3. When powered up the charger will go through a short LED indicator self-test. The battery charger light's on the Ground Control Station will flash in sequence for two seconds.

4. The batteries are fully charged when the green light on the battery charger status panel (Ground Control Station) is illuminated.

Note: If the charger is left plugged in, the charger will automatically restart a complete charge cycle if the batteries voltage drops below a minimum voltage or 30 days has elapsed.

4.4.1 Battery Charger Fault Codes

If a fault occurred during charging, the red "Fault" LED (located on the Ground Control Station panel) will flash with a code corresponding to the error. Refer to the table following for the flash codes and their removal.

If required, further general and troubleshooting information about the battery charger can be found in the charger manufacturers Owner's Guide included in the manual storage box mounted on the machine.

Table 6. Battery Charger Fault Codes

FLASH(s)	FAULT	MODE(S) AFFECTED	REMEDY
1	High battery voltage	Invert or Charge	Discharge battery, unit will auto start.
2	Low battery voltage	Invert or Charge	Connect qualified external AC to charge batteries.
3	Charge time is greater than 20 hrs.	Charge	Remove DC loads or replace batteries.
4	Shorted battery	Charge	Replace Battery.
5	Over-temperature	Invert	Turn the toggle switch to Standby and allow inverter/charger to cool.
6	Over load Over current	Invert or Charge	Remove excessive AC loads and reset unit by turning the toggle switch to Standby they ON.

4.5 AC INVERTER OPERATION (OPTION)

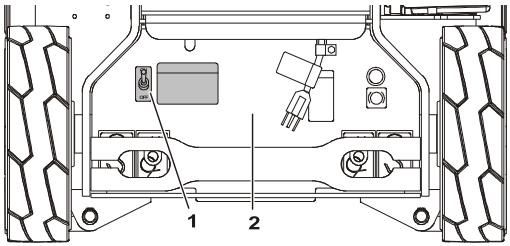

Figure 12. Location of AC Inverter ON/OFF - Toggle Switch

Note: The inverter automatically turns to OFF if it has not detected any AC loads for 2 hours, or if the loads are so small the unit cannot detect them, such as a cell phone charger. To continue inverter operation after an automatic shut-down, cycle the inverter ON/OFF toggle switch to OFF then back to ON.

1. The AC inverter ON/OFF **toggle switch (1)** is located on the **lower rear panel (2)** of the machine.

2. When the toggle switch is set to the ON position this will allow AC current from the inverter to flow to the AC receptacle box in the platform.

Note: Connect devices one at a time to the AC receptacle box. Do not connect to many high-surge devices at once.

3. To turn off the AC current to the platform AC receptacle box, set the inverter toggle switch to the OFF position.

Note: Further General and Troubleshooting information about the Inverter/Charger can be found in the manufacturers Owner's Guide included in the manual storage box mounted on the machine.

4.6 OPERATION

4.6.1 Platform/Ground Select Switch

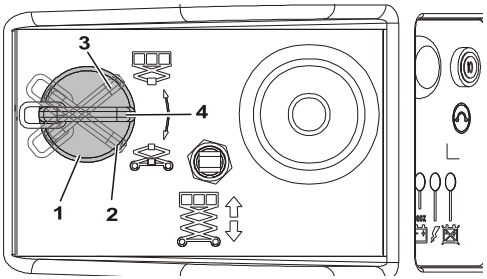

Figure 13. Platform/Ground Select Switch

The **power selector switch (1) on the Ground Control Station** functions to direct electrical power to the desired control station. With the switch in the **ground position (2)**, power is supplied to the emergency stop switch at the ground control station. When the switch is in the **platform position (3)**, power is supplied to the emergency stop switch at the platform control station. The switch should be in the **off position (4)** when parking the machine overnight.

4.6.2 Emergency Stop Switch

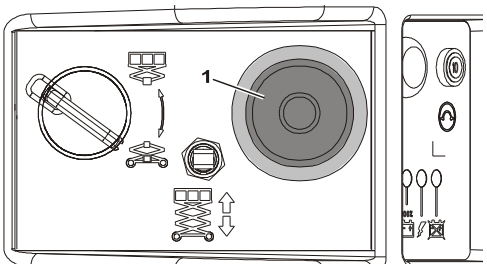

Figure 14. Ground Control - Emergency Stop Switch

This **emergency stop switch (1)**, when in the on (out) position, provides electrical power to the ground controls or platform controls, as applicable. In addition, the switch can be used to turn off power (push the switch IN) to the function controls in the event of an emergency.

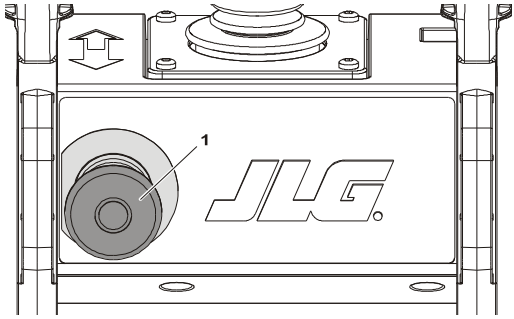

Figure 15. Platform Control - Emergency Stop Switch

The platform **emergency stop switch (1)**, when in the on (out) position, provides electrical power to the platform controls. Push the switch (in) to turn off power to the platform function controls in the event of an emergency.

4.7 RAISING AND LOWERING PLATFORM

⚠ WARNING

Do not raise platform except on a smooth, firm and level surface free of obstructions and holes.

To avoid serious injury, do not operate machine if any control levers or toggle switches controlling platform movement does not return to the off or neutral position when released.

If the platform does not stop when a control switch or lever is released, use the emergency stop switch to stop the machine.

Note: On the platform controller, when selecting between the Lift/Drive functions the joystick controller must be in the neutral position for 3 seconds before the function change is effective. The machine is inoperable before this time.

4.7.1 Raising Platform

1. If the machine is shut down, place the platform/ ground select switch to the desired position (platform or ground).

2. Position both the ground control station and platform control station emergency stop switches to the on position.

From Ground Control Station

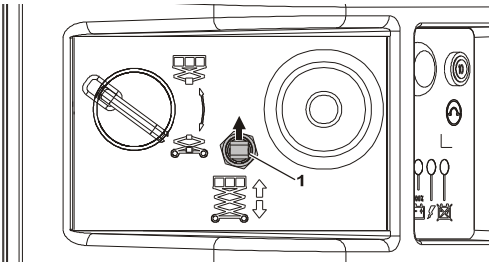

Figure 16. Raising Platform From Ground Control

1. **If operating from the ground controls -**
   Position the **lift switch (1)** to up and hold until desired elevation is achieved.

⚠ WARNING

Do not operate from ground control station with personnel in the platform except in an emergency.

From Platform Control Station

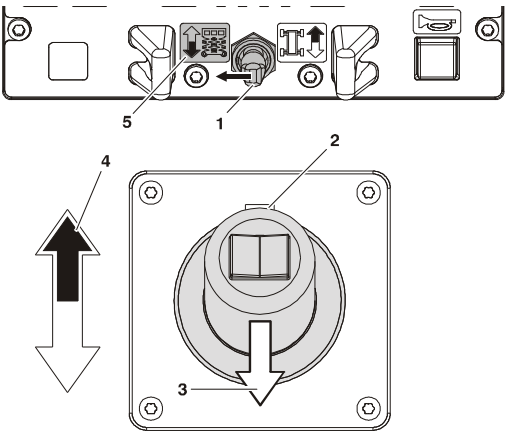

Figure 17. Raising Platform From Platform Control

1. **If operating from the platform controls -** Set the **lift/drive select switch to lift (1)**, squeeze and hold the **red trigger switch (2)**, move the **joystick backward (3)** (platform up) and hold until desired elevation is reached. Releasing the red trigger switch or moving the joystick back to it's centered position will stop the function being operated.

Note: To ensure proper orientation of the desired platform function, match the color (black/white) of the directional arrow (4), to the lift/lower arrow (5) on the platform control indicator panel.

4.7.2 Lowering Platform

⚠ WARNING

Ensure the area beneath the platform is free of personnel prior to lowering.

Note: The machine is equipped with a descent alarm which will sound as the platform is being lowered (optional on CE/UKCA units).

From Ground Control Station

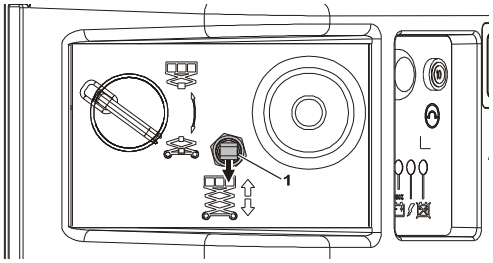

Figure 18. Lowering Platform From Ground Control

1. **If operating from the ground controls -**
   Position the **lift switch (1)** to down and hold until desired elevation is achieved or until platform is fully lowered.

⚠ WARNING

Do not operate from ground control station with personnel in the platform except in an emergency.

From Platform Control Station

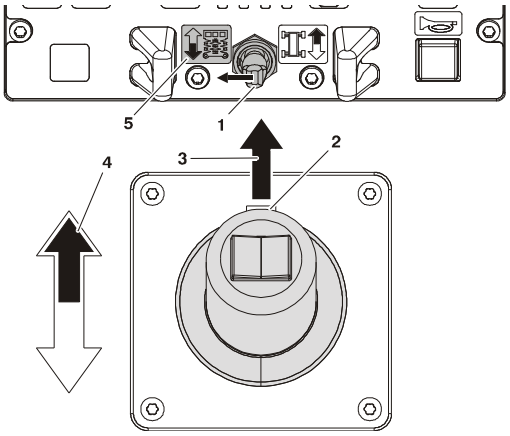

Figure 19. Lowering Platform From Platform Control

1. **If operating from the platform controls -**
   Set the **lift/drive select switch to lift (1)** squeeze the **red trigger switch (2)** and push the **joystick forward (3)** (platform down) and hold until desired elevation is reached or until platform is fully lowered. Releasing the red trigger switch or moving the joystick back to it's centered position will stop the function being operated.

Note: To ensure proper orientation of the desired platform function, match the color (black/white) of the directional arrow (4), to the lift/lower arrow (5) on the platform control indicator panel.

4.8 STEERING AND TRAVELING

⚠ WARNING

Do not drive with platform raised except on a smooth, firm and level surface free of obstructions and holes.

Do not attempt to drive the machine with the platform raised unless the pot hole protection system bars have been fully lowered.

To avoid loss of travel control or upset on grades and sideslopes, do not drive machine on grades or sideslopes exceeding those specified. Reference *Figure — Grade and Side-Slope Definition, page 51*. and *Table — Operating Specification*.

1. Place power selector switch at the ground control station to platform.
2. Position emergency stop switch at platform control station to the on position.

4.8.1 Steering

On the platform control station, set the **lift/drive select switch (1)** to the drive position.

To steer the machine, the thumb operated **steer control switch (2)** on the joystick handle is positioned to the **right (3)** for traveling right, or to the **left (4)** for traveling left. When released, the switch will return to the center-off position and the wheels will remain in the previously selected position. To return the wheels to the straightened position, the switch must be activated in the opposite direction until the wheels are centered.

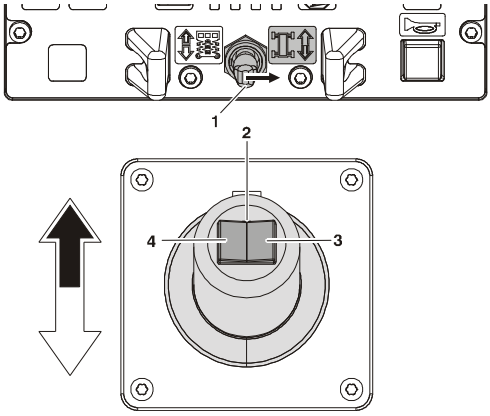

Figure 20. Steering from Platform Control

4.8.2 Driving Forward and Reverse

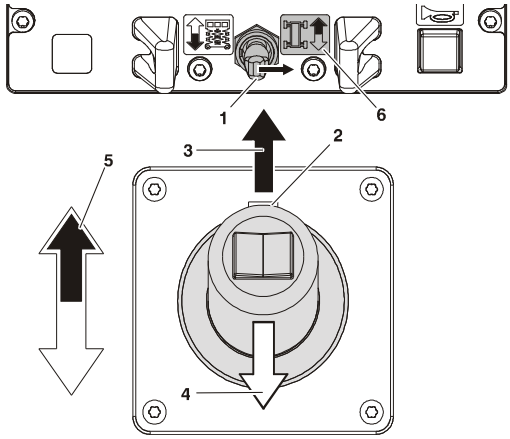

Figure 21. Driving Forward from Platform Control

Set the **lift/drive selector switch (1)** to drive mode. Squeeze the **red trigger switch (2)** on front of the joystick, and move the joystick **forward (3)** to drive forward or **backward (4)** to drive in reverse. The drive system is proportional so for additional drive speed, push the joystick further in the direction of travel. Releasing the red trigger switch or returning the joystick to center will stop the function being operated.

Note: To ensure proper orientation of the desired platform function, match the color (black/white) of the directional arrow (5), to the lift/lower arrow (6) on the platform control indicator panel.

⚠ WARNING

If the tilt indicator warning light/alarm is activated while driving with platform raised, lower platform completely and drive to a firm level surface.

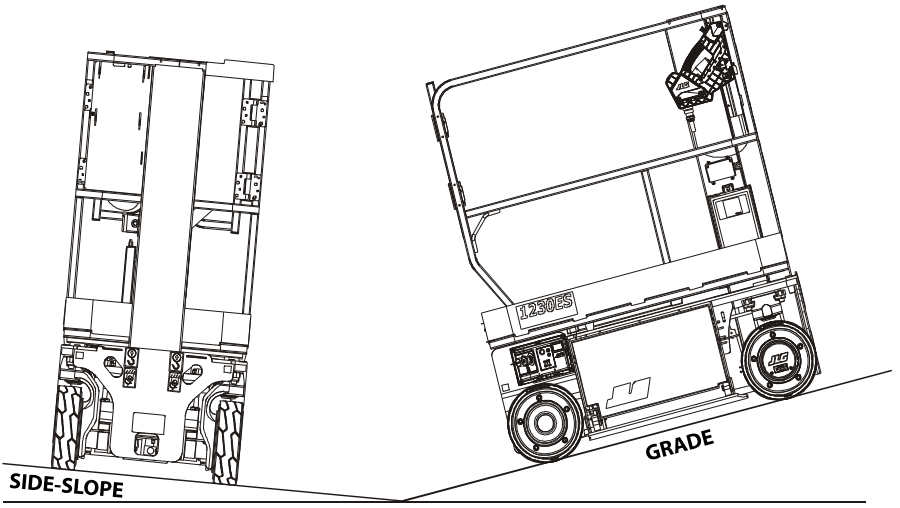

Figure 22. Grade and Side-Slope Definition

4.9 TIE DOWN/LIFT LUGS

See *Figure — Lifting Using Spreader Bar, page 54*.

4.9.1 Tie Down

When transporting the machine, the platform must be fully lowered in the stowed position with the machine securely tied down to the truck or trailer deck. There are two tie-down/lift lugs located at the front and rear of the machine for tieing down.

4.9.2 Lifting

Reference *Figure — Lifting Using Spreader Bar, page 54*. for proper locations when lifting machine. The machine can be lifted using a proper spreader bar and straps/chains only, see *Figure — Lifting Using Spreader Bar, page 54*.

The machine may also be lifted using a fork truck. Lift only with the platform in the stowed position (pot hole protection bars in the up position). Adjust the spread of the **fork truck lifting tines (1)** to just inside the machines front and rear wheels, see below.

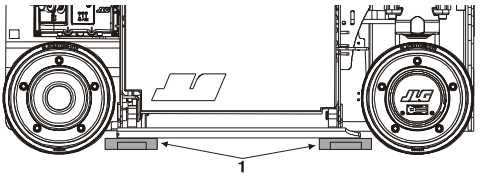

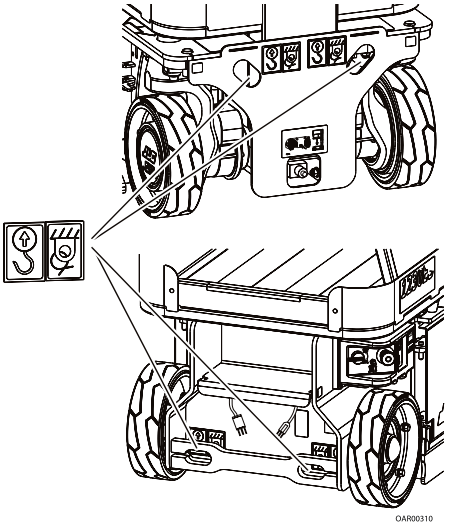

Figure 23. Tie Down and Lift Lug Locations

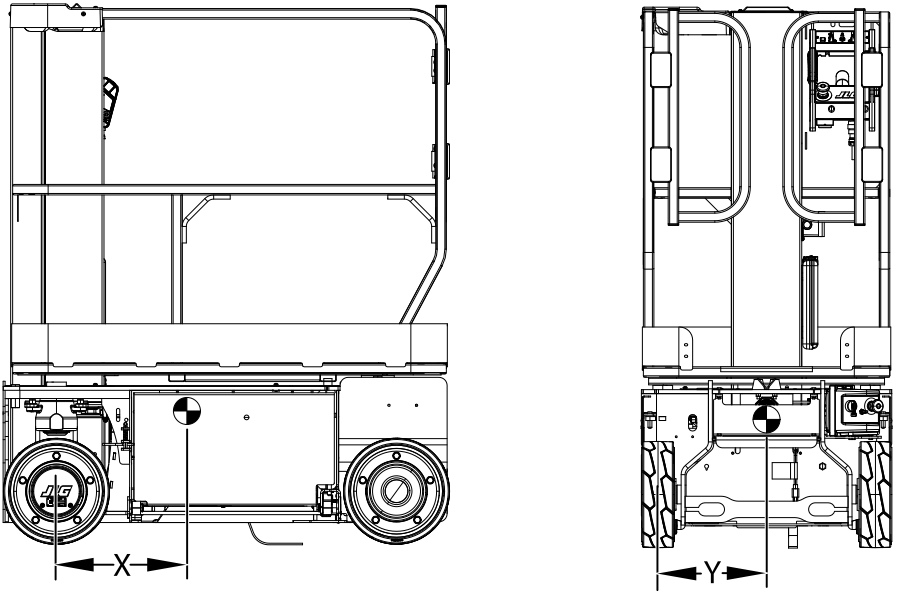

Model	Wheelbase	X	Y
1230ES	41 in. (104cm)	13.38 in (34cm)	11 in. (28cm)

Figure 24. Lifting and Tie-Down Chart.

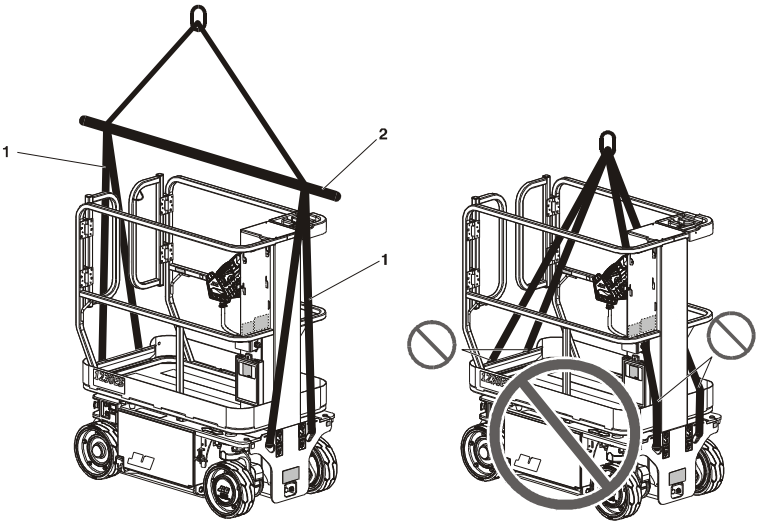

Figure 25. Lifting Using Spreader Bar.

1. Lifting Strap or Chains	2. Spreader Bar Assembly

4.10 TOWING

It is not recommended that this machine be towed, except in the event of an emergency such as a machine malfunction or a total machine power failure.

4.10.1 Electric Brake Release

(See *Figure – Electric Brake Release, page 55*).

Note: Electrical release of the brakes requires enough battery power to hold the brakes in released mode until destination is reached.

1. Chock wheels or secure machine with tow vehicle.
2. Power up machine in ground mode on the **ground control station (1).**
3. The **brake release switch (2)** is located on the **lower rear panel (3).**
4. Depress the brake release switch once to release brakes.
5. When finished towing depress brake release switch again or power machine down at the ground control station to re-engage the brakes.

Note: Any action to remove electrical power from the brakes such as, depressing the ground control emergency stop switch, or switching the key switch to OFF or PLATFORM MODE will re-engage the brakes.

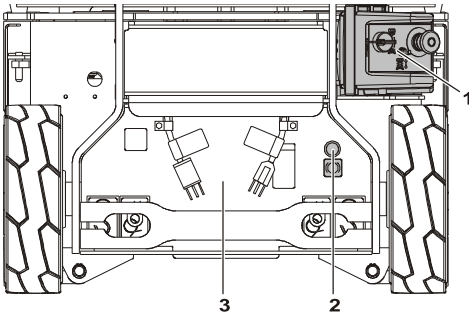

Figure 26. Electric Brake Release.

4.10.2 Mechanical Brake Release

(See *Figure – Brake - Manual Disengage, page 56*).

1. Chock wheels or secure machine with tow vehicle.
2. At the ground control station power machine down by pressing the E-Stop switch in.
3. Remove the **two cover bolts (1), cover (2), and cover o-ring seal (3)** from the back of drive motor unit.
4. Insert the cover bolts into the **two disengage holes in the brake housing (4)**, see Item 4 in *Figure — Brake - Manual Disengage, page 56*.
5. Tighten down the cover bolts in the disengage holes and the brake on that drive motor will disengage.
6. Repeat this procedure on opposite wheel drive. With both drive motor brakes now disengaged the machine can be moved manually.
7. After towing is complete, chock wheels and remove cover bolts from disengage holes.
8. Reinstall cover - before installation check the cover oring seal for damage, replace if necessary.

⚠ CAUTION

After the machine is towed the disengage bolts must be removed from the brake disengage holes. The brakes cannot be engaged if the disengage bolts are left in the disengage holes. This will cause the machine to roll when parked on an incline.

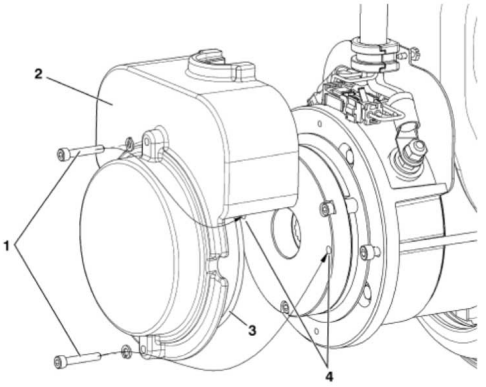

Figure 27. Brake - Manual Disengage.

4.11 PROGRAMMABLE SECURITY LOCK (PSL™) (OPTION)

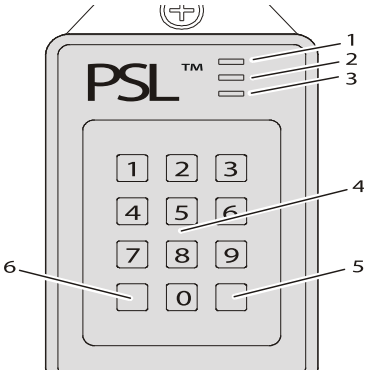

Figure 28. PSL™ Controls & Indicators

1. ON (Green LED)	3. PROGRAM (Red LED)	5. OFF Switch
2. ACCEPT (Amber LED)	4. Key Pad	6. ON Switch

The optional keyless Programmable Security Lock switch can be programmed with a four-digit Operator's Code to allow only those persons with the code to power-up and operate the machine.

The PSL™ is located on the side of the mast near the bottom. On some machines, it may be located on the front of the mast in the platform.

4.11.1 Machine Power Up

Note: When entering the Operator's Code on the keypad, a short beep indicates a properly depressed key. A long beep indicates an error in depressing key. If an error occurs, restart the code entry process again.

1. Enter the programmed four digit Operator's Code on the key pad. The ACCEPT - AMBER LED indicator will be lit if the code is correct.

2. Press the keypad ON button. The ON - GREEN LED indicator will light and power will be supplied to the Ground Control Station.

3. At the ground control station, turn the main power selector switch from OFF to either Platform Control Mode or Ground Control Mode. At the Platform Control Console set the key switch to the ON position.

4. The machine will now operate normally.

4.11.2 Machine Power Down

1. At the Ground Control Station set the main power selector switch to the OFF position.

2. Press the OFF button on the PSL™ keypad. No LEDs on the PSL™ box will be lit.

4.11.3 Changing the Operator's Code

The Operator's Code can be changed should the need occur. A separate Permanent Code matched to the serial number of the PSL™ box is included on a sheet in the PSL™ user manual supplied with the machine.

1. Enter the Permanent Code on the key pad. The PROGRAM - RED LED will be lit if correct code is entered.

Note: ON or OFF cannot be one of the four digits of the new Operator's code.

2. Enter a new four digit Operator's Code on the keypad. The ACCEPT - AMBER LED will light up if the new Operator's Code is accepted.

3. Press the OFF button on the keypad to activate the new Operator's Code.

Note: The new Operator's Code will remain in the PSL™ even when power is removed from the equipment, or until that code is changed again using the Permanent Code.

This Page is intentionally left blank

SECTION 5
Emergency Procedures

5.1 GENERAL INFORMATION

This section explains the steps to be taken in case of an emergency situation during operation.

5.2 EMERGENCY OPERATION

5.2.1 Operator Unable to Control Machine

IF THE PLATFORM OPERATOR IS PINNED, TRAPPED OR UNABLE TO OPERATE OR CONTROL THE MACHINE:

1. Other personnel should operate the machine from ground controls only as required.
2. Only qualified personnel in the platform may use the platform controls. DO NOT CONTINUE OPERATION IF CONTROLS DO NOT FUNCTION PROPERLY.
3. Rescue equipment can be used to remove the platform occupant. Cranes and forklifts can be used to stabilize motion of the machine.

5.2.2 Platform Caught Overhead

If the platform becomes jammed or snagged in overhead structures or equipment, do the following:

1. Shut off the machine.
2. Rescue all people in the platform before freeing the machine. Personnel must be out of the platform before operating any controls on the machine.
3. Use cranes, forklifts or other equipment to stabilize motion of the machine to prevent a tip over as required.
4. From the ground controls, carefully free the platform from the object.
5. Once clear, restart the machine and return the platform to a safe position.
6. Inspect the machine for damage. If the machine is damaged or does not operate properly, turn off the machine immediately. Report the problem to the proper maintenance personnel. Do not operate the machine until it is declared safe for operation.

5.3 PLATFORM MANUAL DESCENT

The platform manual descent valve is used in the event of total power failure to retract and lower the platform using gravity. The manual descent valve is located at the bottom of the mast assembly on the front of the machine inside an access hole. Look for the instruction decal located just above the access hole. (See *Figure — Location of Manual Descent Valve (Front of Machine), page 60*.)

The procedure is as follows:

1. Locate the manual descent valve on the front of the machine at the base of the mast.

⚠ WARNING

Keep hands and arms out of the path of the mast and platform while lowering.

2. Press and hold the RED button on the manual descent valve, release the button when the platform is lowered to desired level.

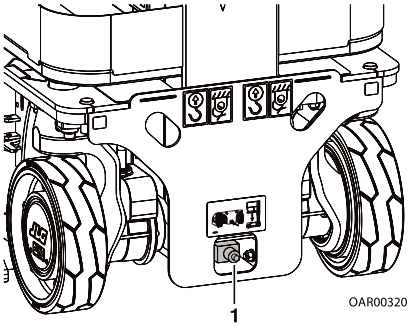

Figure 29. Location of Manual Descent Valve (Front of Machine)

5.4 INCIDENT NOTIFICATION

JLG Industries, Inc. must be notified immediately of any incident involving a JLG product. Even if no injury or property damage is evident, the factory should be contacted by telephone and provided with all necessary details.

- USA: 877-JLG-SAFE (554-7233)
- EUROPE: (44) 1 698 811005
- AUSTRALIA: (61) 2 65 811111
- E-mail: productsafety@jlg.com

Failure to notify the manufacturer of an incident involving a JLG Industries product within 48 hours of such an occurrence may void any warranty consideration on that particular machine.

NOTICE

Following any accident, thoroughly inspect the machine and test all functions first from the ground control station, then from the platform control console. Do not elevate platform until you are sure that all damage has been repaired, if required, and that all controls are operating correctly.

This Page is intentionally left blank

SECTION 6
General Specifications and Operator Maintenance

6.1 INTRODUCTION

This section of the manual provides additional necessary information to the operator for proper operation and maintenance of this machine.

The maintenance portion of this section is intended as information to assist the machine operator to perform daily maintenance tasks only. It does not replace the more thorough Preventive Maintenance and Inspection Schedule included in the Service and Maintenance Manual.

6.2 OTHER PUBLICATIONS AVAILABLE

Service and Maintenance Manual

GLOBAL 31219983

Illustrated Parts Manual

GLOBAL 31219984

6.3 OPERATING SPECIFICATIONS

Table 7. Operating Specification

DESCRIPTION		MODEL 1230ES
PLATFORM		
Maximum Platform Height		12 ft. (3.66 m)
DRIVING		
Maximum Drive Speed	Stowed	3 mph (4.8 kph)
	Elevated	0.5 mph (0.8 kph)
Maximum **Stowed** Travel Grade (Gradeability) (Reference Figure — Grade and Side-Slope Definition)		25% (14°)
Maximum **Stowed** Travel Grade (Sideslope) (Reference Figure — Grade and Side-Slope Definition)		5°
Maximum **Elevated** Travel Grade - (Gradeability)		3° - ANSI/AUS w/CWT, 3.4° - CE/UKCA
Maximum **Elevated** Travel Grade - (Sideslope)		1.5° - ANSI/AUS w/CWT, 3.4° - CE/UKCA

Table 7. Operating Specification (continued)

DESCRIPTION	MODEL 1230ES
Inside Turning Radius	4.4 in. (11.2 cm)
Outside Turning Radius	57.6 in. (1.46 m)
CHASSIS	
Approximate Gross Machine Weight- ANSI/CSA/CE/UKCA/AUS	1765lb. (800.6 kg) 2360 lb. (1070 kg) - AUS w/CWT
Maximum Tire Load (per wheel)	880 lb. (400 kg) 1050 lb. (520 kg) - AUS w/CWT
Ground Bearing Pressure	123 PSI (8.7 kg/cm^2) 160 PSI (11.2 kg/cm^2) - AUS w/CWT
Ground Clearance - (pot hole protection system up) (pot hole protection system down)	 2.6 in (66 mm) 0.5 in (12.2 mm)
Maximum Operating Wind Speed	AUS w/CWT - 28 mph(12.5 m/s) ANSI/CSA/CE/UKCA/AUS - 0 m/s - Indoor Use Only
Maximum Horizontal Manual Side Force: (Platform fully extended with Maximum load)	**ANSI/CSA - Indoor Only** 45 lb force - (200 N) **CE/UKCA/AUS- Indoor Only** 45 lb. force - 200 N **AUS w/CWT - Indoor** 89 lb. force - 400 N **AUS w/CWT - Outdoor** 45 lb. force - 200 N
Maximum Hydraulic Pressure	1600psi (110 bar)
Electrical System Voltage (DC)	24V

6.3.1 Dimensional Data

Table 8. Dimensions

DESCRIPTION	MODEL 1230ES	
Platform Height - Elevated	12 ft.	3.66 m
Platform Height - Stowed	22 in.	56 cm
Working Height	18 ft.	5.48 m
Overall Stowed Machine Height	65.39 in. 68.6 in. - AUS w/CWT	166 cm 174.2 cm- AUS w/CWT
Rail Height (From platform floor)	43.8 in.	111.2 cm
Overall Machine Width	30 in.	76 cm
Overall Machine Length	53.5 in.	1.36 m
Platform Size - Length	2 ft 9 in.	0.84m
Platform Size - Width	27 in.	0.69 m
Wheelbase	40.75 in.	103.5 cm

6.3.2 Platform Capacities

Table 9. Platform Capacities

MACHINE MODEL	SPECIFICATION	MAXIMUM PLATFORM CAPACITY	MAXIMUM PERSONS ALLOWED IN PLATFORM	MAX. SIDE FORCE (Platform Fully Extended @ Max. Capacity)	MAXIMUM OPERATING WIND SPEED
1230ES	ANSI/CSA	500 lb. (227 Kg)	Indoor - 1 Persons + 150 Kg	45lb. (200 N)	0 m/s
	CE/UKCA/AUS (Indoor Only)	230 Kg	Indoor - 1 Persons + 150 Kg	200 N	0 m/s
	AUS w/CWT	500 lb. (230 Kg)	Indoor - 2 Persons + 70 Kg	400 N	0 m/s
		500 lb. (230 Kg)	Outdoor - 1 Person + 150 Kg	200 N	28 mph (12.5 m/s)

6.3.3 Tires

Table 10. Tire Specifications

DESCRIPTION	MODEL 1230ES
Size	12.72 in. x 3.937 in. (323mmx 100mm)
Wheel Bolt Torque	120 ft lb (163 Nm)

6.3.4 Batteries

Table 11. Battery Specifications

DESCRIPTION	MODEL 1230ES
Voltage (24V System - Series)	6 V per battery
Amp Hour - (Std Battery)	220 Amp Hour@ 20 Hr. Rate
Reserve Capacity - (Std Battery)	447 Minutes
Amp Hour - (AGM Battery)	213 Amp Hour@ 20 Hr. Rate
Reserve Capacity - (AGM Battery)	492 Minutes

6.4 LUBRICATION

6.4.1 Lubrication Capacities

Table 12. Capacities

COMPONENT	MODEL 1230ES
Hydraulic Tank	0.8 Gal. (3 L)
Hydraulic System (Including Tank)	1.75 Gal (4.1 L)

6.4.2 Hydraulic Oil

Table 13. Hydraulic Oil

HYDRAULIC SYSTEM OPERATING TEMPERATURE RANGE	SAE VISCOSITY GRADE
0° F to +23° F (-18° C to -5° C)	10W
0° F to 210° F (-18° C to+ 99° C)	10W-20, 10W-30
50° F to 210° F (+10° C to +210° C)	20W-20

Note: Hydraulic oils require anti-wear qualities at least API Service Classification GL-3, and sufficient chemical stability for mobile hydraulic system service. JLG Industries recommends the use of standard UTTO.

Note: Machines may be equipped with biodegradable and non-toxic hydraulic oil. This is a fully synthetic hydraulic oil that possesses the same anti-wear and rust protection characteristics as mineral oils, but will not adversely affect the ground water or the environment when spilled or leaked in small amounts.

Note: Aside from JLG recommendations, it is not advisable to mix oils of different brands or types, as they may not contain the same required additives or be of comparable viscosities. If use of hydraulic oil other than standard UTTO is desired, contact JLG Industries for proper recommendations.

6.4.3 Lubrication Specifications

Table 14. Lubrication Specifications

KEY	SPECIFICATIONS
MPG	Multipurpose Grease having a minimum dripping point of 350° F. Excellent water resistance and adhesive qualities, and being of extreme pressure type. (Timken OK 40 pounds minimum.)
EPGL	Extreme Pressure Gear Lube (oil) meeting API service classification GL-5 or MIL-Spec MIL-L-2105.
HO	Hydraulic Oil. API Service Classification GL-3.

	Shell Naturelle HF-E32 ***(Recommended)***	**Mobil™ EAL Envirosyn H32** ***(Optional)***	**Shell Tellus S2 VX 15** ***(Recommended)***	**Mobil DTE 10 Excel 15** ***(Optional)***
SAE Grade	**—**	—	**—**	—
Specific Gravity	**.918**	.869	**.872**	.837
Pour Point, Max.	**–38°F (-39°C)**	–38°F (-39°C)	**–44°F (-42°C)**	–565°F (–54°C)
Flash Point, Min.	**475°F (246°C)**	514°F (268°C)	**392°F (200°C)**	360°F (182°C)

Viscosity Information				
ISO VG	**32**	32	**15**	15
at 40°C	**31 cSt**	34 cSt	**15.14 cSt**	15.60 cSt

Viscosity Information				
at 100°C	**6.85 cSt**	9.41 cSt	**3.70 cSt**	4.04 cSt
Viscosity Index	**192**	146	**135**	169

Fluid	Properties		Base			Classifications		
Description	Viscosity at 40°C (cSt, Typical)	Viscosity Index	Mineral Oils	Synthetic	Synthetic Polyol Esters	Readily Biodegradable*	Virtually Non-toxic**	Fire Resistant***
Shell Naturelle HF-E32 *(Recommended)*	**32**	**192**		**X**		**X**	**X**	
Mobil™ EAL Envirosyn H32 *(Optional)*	32	146		X		X	X	
Shell Tellus S2 VX 15 *(Recommended)*	**15**	**135**	**X**					**X**
Mobil DTE 10 Excel 15 *(Optional)*	16	169	X					X

*Readily biodegradable classification indicates one of the following:

C02 Conversion>60% per EPA 560/6–82–003

C02 Conversion>80% per CEC–L-33–A-93

**Virtually Non-toxic classification indicates an LC50>5000 ppm per OECD 203

***Fire Resistant classification indicates Factory Mutual Research Corp. (FMRC) Approval

6.5 OPERATOR MAINTENANCE

6.5.1 Oil Check Procedure

- Lube Point(s) - Hydraulic Reservoir
- Reservoir Capacity: 0.80 Gal. (3 L)
- Lube - Hydraulic Oil
- Interval - Check Daily

Note: Be certain the hydraulic oil has warmed to operating temperature before checking the oil level in the reservoir.

1. From either side of the machine, open the **side access door on the base frame (1)**. Locate the **hydraulic oil reservoir (2)** on the **pump unit (3)**. Check the oil level in the hydraulic reservoir by looking at the markings on the side of the tank. The reservoir is marked with **MIN (minimum) and MAX (maximum) markings (4)**. The oil level must be within these markings to operate properly.

2. If additional oil is required, wipe all dirt and debris from the **filler/breather cap (5)** area, add proper grade of oil by using a funnel with a flexible spout or a plastic squeeze bottle. Fill until oil level is between the **MIN and MAX markings (4).**

Note: Care should be taken not to introduce any impurities (dirt, water etc.) while cap is removed.

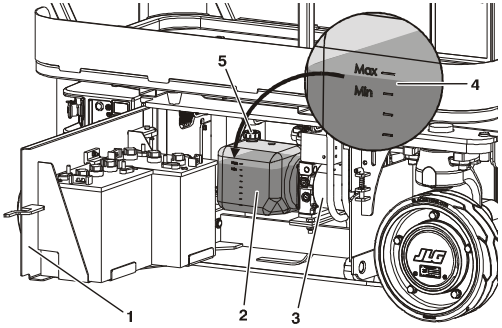

Figure 30. Hydraulic Oil Check Procedure

Note: Recommended lubricating intervals are based on machine operations under normal conditions. For machines used in multi-shift operations and/or exposed to hostile environments or conditions, lubrication frequencies must be increased accordingly.

6.6 BATTERY MAINTENANCE

6.6.1 Battery Maintenance and Safety Practices

⚠ CAUTION

Ensure that battery acid does not come into contact with skin or clothing. Wear protective clothing and eyewear when working with batteries. Neutralize any battery acid spills with baking soda and water.

Battery acid releases an explosive gas while charging, allow no open flames, sparks or lighted tobacco products in the area while charging batteries. Charge batteries only in a well ventilated area.

Add only distilled water to batteries. When adding distilled water to the batteries, a non-metallic container and/or funnel must be used.

As with any wet cell battery, check the electrolyte level of the batteries often, adding only distilled water when required. When fully charged, battery fluid level should be 1/8" below vent tubes. (See *Figure — Battery Fluid Level, page 70*).

- DO NOT fill to bottom of vent tubes.
- DO NOT allow fluid level to go below the top of the plates when charging or operating.

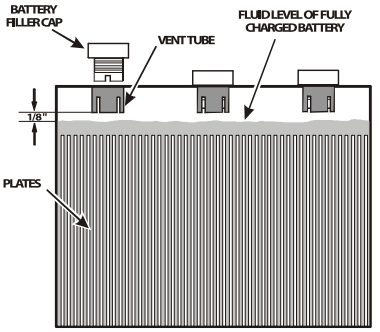

Figure 31. Battery Fluid Level.

6.7 TIRES AND WHEELS

6.7.1 Tire Wear and Damage

Inspect tires periodically for wear or damage. Tires with worn edges or distorted profiles require replacement. Tires with significant damage in the tread area or side wall, require immediate evaluation before replacing the machine into service.

6.7.2 Wheel and Tire Replacement

Replacement wheels must have the same diameter and profile as the original. Replacement tires must be the same size and rating as the tire being replaced.

6.7.3 Wheel Installation

It is extremely important to apply and maintain proper wheel mounting torque.

⚠ WARNING

Wheel lug nuts must be installed and maintained at the proper torque to prevent loose wheels, broken lug nuts, and possible separation of wheel from the axle. Be sure to use only the lug nuts matched to the cone angle of the wheel.

Tighten the lug nuts to the proper torque to prevent wheels from coming loose. Use a torque wrench to tighten the fasteners. If you do not have a torque wrench, tighten the fasteners with a lug wrench, then immediately have a service garage or dealer tighten the lug nuts to the proper torque. Over-tightening will result in breaking the lug nuts or permanently deforming the mounting holes in the wheels. The proper procedure for attaching wheels is as follows:

1. Start all lug nuts by hand to prevent cross threading. DO NOT use a lubricant on threads or nuts.

2. Tighten lug nuts in the following sequence.

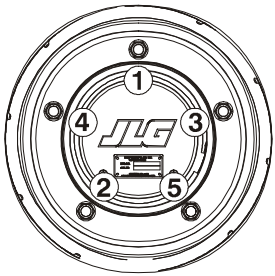

Figure 32. Wheel Lug Nut Tightening Sequence

3. Tightening of the lug nuts should be done in stages. Following the recommended sequence, tighten lug nuts per wheel torque.

Table 15. Wheel Torque Chart

TORQUE SEQUENCE		
1st Stage	2nd Stage	3rd Stage
20-30 ft lbs (28 - 42 Nm)	65-80 ft lbs (91 - 112 Nm)	105 -120 ft lbs (142 - 163 Nm)

4. Wheel lug nuts should be torqued after the first 50 hours of operation and after each wheel removal. Check torque every 3 months or 150 hours of operation.

6.8 DIAGNOSTIC TROUBLE CODES (DTC)

The DTC tables following are sorted in groups by the first two digits, these digits represent the number of flashes the system distress indicator lamp will flash on the platform indicator panel when a fault occurs.

For example: a *2-1 Power-Up* would be indicated by 2 flashes, a pause, then 1 flash, a pause, then would keep repeating until the fault is cleared.

The more detailed three digit code numbers in the DTC column of the following tables are only indicated on a JLG handheld diagnostic analyzer.

To troubleshoot multiple DTCs, start with the DTC with the higher first two digits. **If a correction is made during a check, conclude the check by cycling the machine power off then back on, using the emergency stop switch.**

NOTICE

Should a fault occur which cannot be corrected at the operator's level, the problem must be referred to a mechanic qualified to repair this model of JLG lift.

6.9 DIAGNOSTIC TROUBLE CODES (DTC) CHECK TABLES

6.9.1 0-0 Help Comments

DTC	FAULT MESSAGE	DESCRIPTION	CHECK
001	EVERYTHING OK	The normal help message in platform mode. Displays on the analyzer only.	
002	GROUND MODE OK	The normal help message in ground mode. Displays on the analyzer only.	

DTC	FAULT MESSAGE	DESCRIPTION	CHECK
003	ALARM SOUNDING - TILTED & ABOVE ELEVATION	Control system senses that the platform is elevated and the vehicle is tilted, and the machine not configured to cutout.	• Check that the machine is tilted. If so, lower the platform and reposition the machine to a level surface. • Fully stow the platform. • The tilt sensor is part of the ground control box. Check that the ground control box is secured to the machine. • Check that the pothole protection switches are securely mounted. • Check that the elevation angle sensor is securely mounted. Refer problem to a qualified JLG mechanic.
004	DRIVING AT CUTBACK - ABOVE ELEVATION	The platform is elevated and the machine is driving.	• Fully stow the platform. • Check that the elevation angle sensor is securely mounted. • Check that the pothole protection switches are securely mounted. Refer problem to a qualified JLG mechanic.
005	DRIVE & LIFT UP PREVENTED- TILTED & ELEVATED	Driving is not possible since the platform is elevated and the chassis is not level.	• Check that the machine is tilted. If so, lower the platform and reposition the machine to a level surface. • Fully stow the platform. • The tilt sensor is part of the ground control box. Check that the ground control box is secured to the machine. • Check that the pothole protection switches are securely mounted. • Check that the elevation angle sensor is securely mounted. Refer problem to a qualified JLG mechanic.

DTC	FAULT MESSAGE	DESCRIPTION	CHECK
006	LIFT UP PREVENTED - MAX HEIGHT ZONE A	The vehicle has reached the maximum height and further lift up motion is not possible. Applicable to 2630ES or 3246ES.	• Check that the zone is set appropriately for the platform load. • Check that the platform height is at the rated maximum height specification (20′ for 2630 or 26′ for the 3246). • Check that the elevation angle sensor is securely mounted. • If there are any elevation sensor faults (DTC 251, 252, 2511, or 2512), troubleshoot those first. Refer problem to a qualified JLG mechanic.
007	DRIVING AT CUTBACK - POTHOLE STILL ENGAGED	While stowed, drive speed is reduced since the control system detected pothole protection mechanism failed to retract.	• Check for obstructions around the pot-hole protection mechanisms. • Check that the PHP switches are securely mounted. Refer problem to a qualified JLG mechanic.
008	FUNCTIONS LOCKED OUT - SYSTEM POWERED DOWN	After 2 hours without activity, the control system enters a low-power state to preserve battery charge.	• Normal operation should resume after power is cycled off then back on. • Check batteries charge, condition, etc. Refer problem to a qualified JLG mechanic.
009	DRIVE PREVENTED - ELEVATED ABOVE DRIVE CUT-OUT HEIGHT	The platform is elevated above the calibrated cut-out height.	• Check that the elevation angle sensor is securely mounted. Refer problem to a qualified JLG mechanic.

6.9.2 2-1 Power-Up

DTC	FAULT MESSAGE	DESCRIPTION	CHECK
211	POWER CYCLE	This help message is issued at each power cycle. Displays on the analyzer only.	Normal operation. No check necessary.
212	KEYSWITCH FAULTY	Both platform and ground modes are selected simultaneously. Defaults to ground mode.	Refer problem to a qualified JLG mechanic.

6.9.3 2-2 Platform Controls

DTC	FAULT MESSAGE	DESCRIPTION	CHECK
221	FUNCTION PROBLEM - HORN PERMANENTLY SELECTED	The horn switch was closed during power-up platform mode.	• Check if the horn switch is damaged, obstructed or jammed. Refer problem to a qualified JLG mechanic.
222	FUNCTION PROBLEM - INDOOR / OUT- DOOR PERMANENTLY SELECTED	The indoor / outdoor (zone A / zone B) switch was closed during power-up in platform mode.	• Check if the indoor/outdoor (zone A / zone B) capacity switch is damaged, obstructed or jammed. Refer problem to a qualified JLG mechanic.
223	FUNCTION PROBLEM - DRIVE & LIFT ACTIVE TOGETHER	The drive and lift inputs are closed simultaneously in platform mode.	• Check drive/lift switch for visible damage. Refer problem to a qualified JLG mechanic.
224	FUNCTION PROBLEM - STEER LEFT PERMANENTLY SELECTED	The steer left switch was closed during power-up in platform mode.	• Check if the steer left switch is obstructed or jammed. Refer problem to a qualified JLG mechanic.
225	FUNCTION PROBLEM - STEER RIGHT PERMANENTLY SELECTED	The steer right switch was closed during power-up in platform mode.	• Check if the steer right switch is obstructed or jammed. Refer problem to a qualified JLG mechanic.
226	ACCELERATOR FAULTY -WIPER OUT OF RANGE	There is a problem with the joystick.	• Center joystick and check to see if a power cycle will clear DTC. Refer problem to a qualified JLG mechanic.

DTC	FAULT MESSAGE	DESCRIPTION	CHECK
227	STEER SWITCHES FAULTY	The steer left and steer right inputs were closed simultaneously.	• Check if the steer switches are damaged, obstructed or jammed. Refer problem to a qualified JLG mechanic.
228	FUNCTION LOCKED OUT - ACCELERATOR NOT CENTERED	The joystick was not centered at power-up.	• Release joystick and allow to center. • Check if the joystick is obstructed or jammed. Refer problem to a qualified JLG mechanic.
229	FUNCTION PROBLEM - TRIGGER PERMANENTLY CLOSED	The trigger switch was closed during power-up in platform mode.	• Check if the trigger switch is obstructed or jammed. Refer problem to a qualified JLG mechanic.
2210	TRIGGER CLOSED TOO LONG WHILE IN NEUTRAL	The trigger switch was closed for more than five seconds while the joystick was centered.	• Check if the trigger switch is obstructed or jammed. Refer problem to a qualified JLG mechanic.
2232	FUNCTION PROBLEM - DRIVE & LIFT BOTH OPEN	The drive and lift inputs are both de-energized in platform mode.	• Check if either function is active, if Yes; Refer problem to a qualified JLG mechanic.

6.9.4 2-3 Ground Controls

DTC	FAULT MESSAGE	DESCRIPTION	CHECK
231	FUNCTION PROBLEM - LIFT PERMANENTLY SELECTED	The ground control box lift switch was closed up or down, during power-up in ground mode.	• Check if the lift switch is obstructed or jammed. Refer problem to a qualified JLG mechanic.
232	GROUND LIFT UP / DOWN ACTIVE TOGETHER	The lift up / down inputs are closed simultaneously.	• Check if the lift switch is obstructed or jammed. Refer problem to a qualified JLG mechanic.
233	FUNCTION PROBLEM - BRAKE RELEASE PERMANENTLY SELECTED	The manual brake release switch was closed during power-up.	• Check if the brake release switch is obstructed or jammed. Refer problem to a qualified JLG mechanic.

6.9.5 2-5 Function Prevented

DTC	FAULT MESSAGE	DESCRIPTION	CHECK
251	ELEV ANGLE SENSOR FAULTY - VOLTAGE OUT OF RANGE	There is a problem with the elevation angle sensor input.	• Check that the platform elevation sensor is securely mounted and undamaged. Refer problem to a qualified JLG mechanic.
252	ELEV ANGLE SENSOR HAS NOT BEEN CALIBRATED	The elevation angle sensor has not been calibrated	Refer problem to a qualified JLG mechanic.
253	DRIVE PREVENTED-CHARGER CONNECTED	Driving is not possible while the vehicle is charging.	• Check if the charger is connected to off board power source and disconnect if desired. Refer problem to a qualified JLG mechanic.
254	DRIVE & LIFT UP PREVENTED- CHARGER CONNECTED	Drive or lift is not possible while the vehicle is charging AND is configured to prevent all motion.	• Check if the charger is connected to off board power source and disconnect if desired. Refer problem to a qualified JLG mechanic.

DTC	FAULT MESSAGE	DESCRIPTION	CHECK
255	PLATFORM OVERLOADED	The load sensing system measured platform load is excessive.	• Remove excess weight from the platform. • Check that the platform is not caught on something, preventing up or down movement. Refer problem to a qualified JLG mechanic.
256	DRIVE PREVENTED- POT-HOLE NOT ENGAGED	Driving is not possible while elevated since the pot-hole protection system failed to deploy.	• Check for obstructions or mechanical problems around the pot-hole protection mechanisms. • Check that the PHP switches are securely mounted. Refer problem to a qualified JLG mechanic.
257	ELEV PROX PERMANENTLY CLOSED - CHECK PROX AND ANGLE ADJUSTMENT	The elevation proximity switch shows the platform to be stowed, while the elevation angle sensor shows the platform to be raised. The elevation proximity switch is only found on certain older lifts. This switch is not used on current machines so this DTC should not occur.	Refer problem to a qualified JLG mechanic.
258	DRIVE & LIFT PREVENTED - BRAKES ELECTRICALLY RELEASED FOR TOWING	Manual brake release mode is activated with the switch in the battery box near the ground control box. Drive or lift is not possible.	• Push manual brake release switch again or cycle power to clear manual brake release mode. • Check if the brake release switch is obstructed or jammed. Refer problem to a qualified JLG mechanic.
259	MODEL CHANGED - HY-DRAULICS SUSPENDED - CYCLE EMS	The model selection has been changed.	Refer problem to a qualified JLG mechanic.
2510	DRIVE PREVENTED-BRAKES NOT RELEASING	There is a problem with the drive or brake system.	• Ensure vehicle is not stuck on something preventing movement. Refer problem to a qualified JLG mechanic.

DTC	FAULT MESSAGE	DESCRIPTION	CHECK
2511	ELEV ANGLE SENSOR FAULTY - NOT MOUNTED	The input voltage from the elevation angle sensor indicates the elevation angle sensor is not mounted.	• Check that the elevation angle sensor is securely mounted. Refer problem to a qualified JLG mechanic.
2512	ELEV ANGLE SENSOR NOT DETECTING CHANGE	The input voltage from the elevation angle sensor did not change while vehicle was lifting up.	• Check that the elevation angle sensor is securely mounted. Refer problem to a qualified JLG mechanic.

6.9.6 3-1 Line Contactor Open Circuit

DTC	FAULT MESSAGE	DESCRIPTION	CHECK
311	OPEN CIRCUIT LINE CONTACTOR	There is a problem with the line contactor.	Refer problem to a qualified JLG mechanic.
312	CONTACTOR DRIVER PERMANENTLY OFF	There is a problem with the power module line contactor control.	Refer problem to a qualified JLG mechanic.

6.9.7 3-2 Line Contactor Short Circuit

DTC	FAULT MESSAGE	DESCRIPTION	CHECK
321	LINE CONTACTOR MISWIRED ON OR WELDED	There is a problem with the line contactor.	Refer problem to a qualified JLG mechanic.
322	CONTACTOR DRIVER PERMANENTLY ON	There is a problem with the power module line contactor control.	Refer problem to a qualified JLG mechanic.
326	AUXILIARY RELAY - SHORT TO BATTERY	There is a problem with the auxiliary relay contacts or wiring.	Refer problem to a qualified JLG mechanic.

6.9.8 3-3 Ground Output Driver

DTC	FAULT MESSAGE	DESCRIPTION	CHECK
331	BRAKE SHORT TO BATTERY	A problem has been detected in this function.	Refer problem to a qualified JLG mechanic.
332	BRAKE OPEN CIRCUIT	A problem has been detected in this function.	Refer problem to a qualified JLG mechanic.
333	LIFT UP SHORT TO BATTERY	A problem has been detected in this function.	Refer problem to a qualified JLG mechanic.
334	LIFT UP OPEN CIRCUIT	A problem has been detected in this function.	Refer problem to a qualified JLG mechanic.

DTC	FAULT MESSAGE	DESCRIPTION	CHECK
335	LIFT DN SHORT TO BATTERY	A problem has been detected in this function.	Refer problem to a qualified JLG mechanic.
336	LIFT DN OPEN CIRCUIT	A problem has been detected in this function.	Refer problem to a qualified JLG mechanic.
337	STEER LEFT SHORT TO BATTERY	A problem has been detected in this function.	Refer problem to a qualified JLG mechanic.
338	STEER LEFT OPEN CIRCUIT	A problem has been detected in this function.	Refer problem to a qualified JLG mechanic.
339	STEER RIGHT SHORT TO BATTERY	A problem has been detected in this function.	Refer problem to a qualified JLG mechanic.
3310	STEER RIGHT OPEN CIRCUIT	A problem has been detected in this function.	Refer problem to a qualified JLG mechanic.
3311	GROUND ALARM SHORT TO BATTERY	A problem has been detected in this function.	Refer problem to a qualified JLG mechanic.
3312	LEFT BRAKE SHORT TO BATTERY	A problem has been detected in this function.	Refer problem to a qualified JLG mechanic.
3313	RIGHT BRAKE SHORT TO BATTERY	A problem has been detected in this function.	Refer problem to a qualified JLG mechanic.
3314	LEFT BRAKE OPEN CIRCUIT	A problem has been detected in this function.	Refer problem to a qualified JLG mechanic.
3315	RIGHT BRAKE OPEN CIRCUIT	A problem has been detected in this function.	Refer problem to a qualified JLG mechanic.
33297	LEFT BRAKE - SHORT TO GROUND	A problem has been detected in this function.	Refer problem to a qualified JLG mechanic.
33298	STEER LEFT VALVE - SHORT TO GROUND	A problem has been detected in this function.	Refer problem to a qualified JLG mechanic.
33299	LINE CONTACTOR COIL - SHORT TO BATTERY	A problem has been detected in this function.	Refer problem to a qualified JLG mechanic.
33302	NEGATIVE SUPPLY - SHORT TO BATTERY	A problem has been detected in this function.	Refer problem to a qualified JLG mechanic.
33303	NEGATIVE SUPPLY - SHORT TO GROUND	A problem has been detected in this function.	Refer problem to a qualified JLG mechanic.
33304	RIGHT BRAKE - SHORT TO GROUND	A problem has been detected in this function.	Refer problem to a qualified JLG mechanic.
33305	STEER RIGHT VALVE - SHORT TO GROUND	A problem has been detected in this function.	Refer problem to a qualified JLG mechanic.
33406	LIFT UP VALVE - SHORT TO GROUND	A problem has been detected in this function.	Refer problem to a qualified JLG mechanic.
33407	LIFT DN VALVE - SHORT TO GROUND	A problem has been detected in this function.	Refer problem to a qualified JLG mechanic.

6.9.9 4-2 Thermal Limit (SOA)

DTC	FAULT MESSAGE	DESCRIPTION	CHECK
421	POWER MODULE TOO HOT - PLEASE WAIT	The power module has reached thermal cutout.	• Power down and allow to cool. • Do not operate in ambients over 140° F (60° C). Refer problem to a qualified JLG mechanic.
422	DRIVING AT CUTBACK - POWER MODULE CURRENT LIMIT	The drive portion of the power module has reached thermal limit.	Refer problem to a qualified JLG mechanic.
423	LIFT UP AT CUTBACK - POWER MODULE CURRENT LIMIT	The lift up portion of the power module has reached thermal limit.	Refer problem to a qualified JLG mechanic.

6.9.10 4-4 Battery Supply

DTC	FAULT MESSAGE	DESCRIPTION	CHECK
441	BATTERY VOLTAGE TOO LOW - SYSTEM SHUTDOWN	A problem has been detected with the batteries or power module.	• Recharge batteries or check for damaged batteries. • Check battery charger function. Refer problem to a qualified JLG mechanic.
442	BATTERY VOLTAGE TOO HIGH - SYSTEM SHUTDOWN	A problem has been detected with the batteries or power module.	• May be due to improper battery charging or incorrect voltage batteries being used. Refer problem to a qualified JLG mechanic.
443	LSS BATTERY VOLTAGE TOO HIGH	A problem has been detected with the load sense system.	• May be due to improper battery charging or incorrect voltage batteries being used. Refer problem to a qualified JLG mechanic.
444	LSS BATTERY VOLTAGE TOO LOW	A problem has been detected with the load sense system.	• Recharge batteries or check for damaged batteries. Refer problem to a qualified JLG mechanic.

DTC	FAULT MESSAGE	DESCRIPTION	CHECK
446 4421 4422	LOGIC SUPPLY VOLTAGE OUT OF RANGE	The System Module logic supply voltage was measured to be out of normal operating range.	• Check for severely discharged battery, loose cables or for damaged bat- tery; otherwise; • Refer problem to a qualified JLG mechanic.

6.9.11 6-6 Communication

DTC	FAULT MESSAGE	DESCRIPTION	CHECK
661	CANBUS FAILURE- POWER MODULE	The control system failed to receive messages from the power module.	Refer problem to a qualified JLG mechanic.
662	CANBUS FAILURE- PLATFORM MODULE	In platform mode, the control system failed to receive messages from the platform board.	Refer problem to a qualified JLG mechanic.
663	CANBUS FAILURE - LOAD SENSING SYSTEM MODULE	With load sensing system enabled, the control system failed to receive messages from the load sensing system module.	Refer problem to a qualified JLG mechanic.
664	CANBUS FAILURE- ACCESSORY MODULE	An accessory module has stopped communication.	• See accessory module documentation for troubleshooting. Refer problem to a qualified JLG mechanic.
6635	CANBUS FAILURE - CHASSIS TILT SENSOR	Machine control system lost communication with the machines' tilt sensor.	• Refer problem to a qualified JLG mechanic.

6.9.12 6-7 Accessory

DTC	FAULT MESSAGE	DESCRIPTION	CHECK
671	ACCESSORY FAULT	An accessory module is reporting a fault.	• See accessory module documentation for troubleshooting. Refer problem to a qualified JLG mechanic.

6.9.13 7-7 Electric Motor

DTC	FAULT MESSAGE	DESCRIPTION	CHECK
771	OPEN CIRCUIT DRIVE MOTOR WIRING	The power module detected a problem in the drive motors' power circuit wiring.	Refer problem to a qualified JLG mechanic.
772	STALLED TRACTION MOTOR OR POWER WIRING ERROR	The power module detected a problem in the drive motors' power circuit wiring.	Refer problem to a qualified JLG mechanic.
773	CAPACITOR BANK FAULT - CHECK POWER CIRCUITS	The power module detected a problem in the pump or drive motors' power circuit wiring.	Refer problem to a qualified JLG mechanic.
774	SHORT CIRCUIT FIELD WIRING	The power module detected a problem in the drive motors' power circuit wiring.	Refer problem to a qualified JLG mechanic.
775	OPEN CIRCUIT FIELD WIRING	The power module detected a problem in the drive motors' power circuit wiring.	Refer problem to a qualified JLG mechanic.
776	STALLED PUMP MOTOR OR POWER WIRING ERROR	The power module detected a problem in the drive motors' power circuit wiring.	Refer problem to a qualified JLG mechanic.
777	OPEN CIRCUIT PUMP MOTOR WIRING	The power module detected a problem in the drive motors' power circuit wiring.	Refer problem to a qualified JLG mechanic.
778	TRACTION T HIGH - CHECK POWER CIRCUITS	The power module detected a problem in the drive motors' power circuit wiring.	Refer problem to a qualified JLG mechanic.
779	TRACTION T LOW - CHECK POWER CIRCUITS	The power module detected a problem in the drive motors' power circuit wiring.	Refer problem to a qualified JLG mechanic.
7710	PUMP P HIGH - CHECK POWER CIRCUITS	The power module detected a problem in the drive motors' power circuit wiring.	Refer problem to a qualified JLG mechanic.

DTC	FAULT MESSAGE	DESCRIPTION	CHECK
7711	PUMP P LOW - CHECK POWER CIRCUITS	The power module detected a problem in the drive motors' power circuit wiring.	Refer problem to a qualified JLG mechanic.
7741	ARMATURE BRAKING CURRENT TOO HIGH	The power module has detected excessive braking current .	This can be caused by transporting an excessive load on a steep grade.
7742	FIELD VOLTAGE IMPROPER	The power module detected a problem in the drive motors' power circuit wiring.	Recycle power on/off, if problem persists; Refer problem to a qualified JLG mechanic.

6.9.14 8-1 Tilt Sensor

DTC	FAULT MESSAGE	DESCRIPTION	CHECK
811	TILT SENSOR NOT CALIBRATED	The tilt sensor calibration has not been performed.	Refer problem to a qualified JLG mechanic.
812	NO DATA FROM TILT SENSOR - NOT CONNECTED OR FAULTY	No signal from tilt sensor.	Refer problem to a qualified JLG mechanic.

6.9.15 9-9 Hardware

DTC	FAULT MESSAGE	DESCRIPTION	CHECK
995	POWER MODULE FAILURE-PERSONALITY RANGE ERROR	A problem has been detected with the power module.	Refer problem to a qualified JLG mechanic.
996	POWER MODULE FAILURE-INTERNAL ERROR	A problem has been detected with the power module.	Refer problem to a qualified JLG mechanic.
997	POWER MODULE FAILURE - CHECK POWER CIRCUITS OR MOSFET SHORT CIRCUIT	A problem has been detected with the power module.	Refer problem to a qualified JLG mechanic.
998	EEPROM FAILURE- CHECK ALL SETTINGS	A problem has been detected with the ground board.	Refer problem to a qualified JLG mechanic.
999	FUNCTION LOCKED OUT - POWER MODULE SOFTWARE VERSION IMPROPER	The power module software version is not compatible with the rest of the system.	Refer problem to a qualified JLG mechanic.

DTC	FAULT MESSAGE	DESCRIPTION	CHECK
9910	FUNCTION LOCKED OUT - PLATFORM MODULE SOFTWARE VERSION IMPROPER	The platform board software version is not compatible with the rest of the system.	Refer problem to a qualified JLG mechanic.
9911	FUNCTION LOCKED OUT - LSS MODULE SOFTWARE VERSION IMPROPER	The load sensing system module software version is not compatible with the rest of the system.	Refer problem to a qualified JLG mechanic.
9912	POWER MODULE FAILURE - SYSTEM MONITOR	A problem has been detected with the power module.	Refer problem to a qualified JLG mechanic.
9924	FUNCTIONS LOCKED OUT - MACHINE NOT CONFIGURED	Anew ground board was installed but not configured.	Refer problem to a qualified JLG mechanic.

DTC	FAULT MESSAGE	DESCRIPTION	CHECK
9950 9951 9952 9953 9954 9955 9956 9957 9958 9960 9962 9963 9964 9969 9971 9970 99143 99144 99145 99146 99147 99148 99149	POWER MODULE FAILURE-INTERNAL ERROR	A problem has been detected with the power module	Cycle machine power on /off a few times if this doesn't clear the DTC, refer problem to a qualified JLG mechanic.

6.10 SUPPLEMENTAL INFORMATION ONLY APPLICABLE TO CE/UKCA MACHINES

The following information is provided in accordance with the requirements of the European Machinery Directive 2006/42/EC or Supply of Machinery (Safety) Regulations 2008 No. 1597.

The A-Weighted emission sound pressure level at the work platform is less than 70dB(A).

The vibration total value to which the hand-arm system is subjected does not exceed 2,5 m/s^2. The highest root mean square value of weighted acceleration to which the whole body is subjected does not exceed 0.5 m/s^2.

6.11 EC DECLARATION OF CONFORMITY

Manufacturer
JLG Industries, Inc.

Address
1 JLG Drive
McConnellsburg, PA 17233 USA

Technical File
JLG EMEA B.V.
Polaris avenue 63,
2132 JH Hoofddorp
The Netherlands

Contact/Position
Senior Manager — Product Safety & Reliability

Date/Place
Hoofddorp, Netherlands

Machine Type
Mobile Elevating Work Platform

Model Type
1230ES

EC-Number
2842

Certificate Number
KCEC4427

Notified Body
Kuiper Certificering b.v.

Address
Van Slingelandtstsraat 75, 7331 NM
Apeldoorn, The Netherlands

Reference Standards

- EN 55011:2009/A1:2010
- EN 61000-6-2:2005
- EN 60204-1:2018
- EN 280:2013+ A1:2015
- EN ISO 12100:2010

JLG Industries, Inc. hereby declares that the above mentioned machine conforms with the requirements of:

- 2006/42/EC — Machinery Directive
- 2014/30/EU — EMC Directive
- 2014/53/EU — RED Directive (If fitted with optional equipment)

Note: This declaration conforms with the requirements of annex II-A of the council directive 2006/42/EC. Any modification of the above described machine violates the validity of this declaration.

6.12 UKCA DECLARATION OF CONFORMITY

Manufacturer
JLG Industries, Inc.

Address
1 JLG Drive
McConnellsburg, PA 17233 USA

Technical File
JLG Industries UK Ltd
Braunstone Frith Industrial Estate
Unit 3 Sunningdale Road
Leicester, LE3 1UX
United Kingdom

Contact/Position
Director of Engineering — Europe

Date/Place
Leicester, United Kingdom

Machine Type
Mobile Elevating Work Platform

Model Type
1230ES

AB-Number
0463

Certificate Number
AVUK4427

Approved Body
Amtri Veritas

Address
Pierce Street, Macclesfield, SK11 6ER, England

Reference Standards

- EN 55011:2009/A1:2010
- EN 61000-6-2:2005
- EN 60204-1:2018
- EN 280:2013+ A1:2015
- EN ISO 12100:2010

JLG Industries, Inc. hereby declares that the above mentioned machine conforms with the requirements of:

- 2008 No. 1597 - Supply of Machinery (Safety) Regulations 2008
- 2016 No. 1091 - Electromagnetic Compatibility Regulations 20165
- 2017 No. 1206 - Radio Equipment Regulations 2017 (if fitted with optional equipment)

Note: This declaration conforms with the requirements of annex II-A of the Regulations 2008 No. 1597. Any modification of the above described machine violates the validity of this declaration.

Serial Number _____

Date	Comments



Corporate Office
JLG Industries, Inc.
1 JLG Drive
McConnellsburg, PA 17233-9533 USA
(717) 485-5161 (Corporate)
(877) 554-5438 (Customer Support)
(717) 485-6417

Visit our website for JLG Worldwide Locations.
www.jlg.com



OSHKOSH™