Operation & Safety Manual

Original Instructions -
Keep this manual with the machine at all times.

Model ES1330L, ES1530L

PVC 2204

31220308

April 11, 2022 - Rev A

ANSI ***AS/NZS MOL70 GB***

An Oshkosh Corporation Company

⚠ WARNING

Operating, servicing and maintaining this vehicle or equipment can expose you to chemicals including engine exhaust, carbon monoxide, phthalates, and lead, which are known to the State of California to cause cancer and birth defects or other reproductive harm. To minimize exposure, avoid breathing exhaust, do not idle the engine except as necessary, service your vehicle or equipment in a well-ventilated area and wear gloves or wash your hands frequently when servicing. For more information go to www.P65Warnings.ca.gov.

FOREWORD

The Mobile Elevating Work Platform (MEWP) models covered in this manual are designed and tested to meet or exceed various compliance standards. Please refer to the manufacturer's nameplate affixed to the subject MEWP for specific standard compliance information.

This manual is a very important tool! Keep it with the machine at all times.

The purpose of this manual is to provide owners, users, operators, lessors, and lessees with the precautions and operating procedures essential for the safe and proper machine operation for its intended purpose.

Due to continuous product improvements, JLG Industries, Inc. reserves the right to make specification changes without prior notification. Contact JLG Industries, Inc. for updated information.

Refer to www.JLG.com for Warranty, Product Registration, and other machine-related documentation.

SAFETY ALERT SYMBOLS AND SAFETY SIGNAL WORDS



This is the Safety Alert Symbol. It is used to alert you to the potential personal injury hazards. Obey all safety messages that follow this symbol to avoid possible injury or death.

⚠ DANGER

Indicates an imminently hazardous situation. If not avoided, will result in serious injury or death. This decal will have a red background.

⚠ WARNING

Indicates a potentially hazardous situation. If not avoided, could result in serious injury or death. This decal will have an orange background.

⚠ CAUTION

Indicates a potentially hazardous situation. If not avoided, may result in minor or moderate injury. It may also alert against unsafe practices. This decal will have a yellow background.

NOTICE

Indicates information or a company policy that relates directly or indirectly to the safety of personnel or protection of property.

⚠ WARNING

This product must comply with all safety related bulletins. Contact JLG Industries, Inc. or the local authorized JLG representative for information regarding safety related bulletins which may have been issued for this product.

NOTICE

JLG Industries, Inc. sends safety related bulletins to the owner of record of this machine. Contact JLG Industries, Inc. to ensure that the current owner records are updated and accurate.

NOTICE

JLG Industries, Inc. must be notified immediately in all instances where JLG products have been involved in an accident involving bodily injury or death or when substantial damage has occurred to personal property or the JLG product.

For:

- Accident Reporting
- Product Safety Publications
- Current Owner Updates
- Questions Regarding Product Safety
- Standards and Regulations Compliance Information
- Questions Regarding Special Product Applications
- Questions Regarding Product Modifications

Contact:

Product Safety and Reliability Department
JLG Industries, Inc.
13224 Fountainhead Plaza
Hagerstown, MD 21742
USA
or Visit www.jlg.com to find your local JLG office.

In USA:

Toll Free: 877-JLG-SAFE (877-554-7233)

Outside USA:

Phone: 240-420-2661
Fax: 301-745-3713
E-mail: ProductSafety@JLG.com

REVISION LOG

DATE	REVISION	DESCRIPTION
April 11, 2022	A	Original Issue

This Page is intentionally left blank

SECTION CONTENTS

Section	Subject	Page
FOREWORD		**3**
REVISION LOG		**7**
SECTION 1		
SAFETY PRECAUTIONS		**13**
1.1	General	13
1.2	Pre-Operation	13
1.3	Operation	15
1.4	Towing, Lifting, and Hauling	21
1.5	Maintenance	22
SECTION 2		
USER RESPONSIBILITIES, MACHINE PREPARATION, AND INSPECTION		**25**
2.1	Personnel Training	25
2.2	Preparation, Inspection, and Maintenance	26
2.3	Pre-Start Inspection	27
2.4	Walk-Around Inspection	29
2.5	Function Check	31
SECTION 3		
MACHINE CONTROLS, INDICATORS, AND OPERATION		**35**
3.1	General	35
3.2	Description	35
3.3	Operating Characteristics and Limitations	36
3.4	Platform Loading	36
3.5	Machine Control Locations	37
3.6	Battery Charging	37
3.7	Ground Control Station	38
3.8	Platform Control Station	41
3.9	Platform Manual Descent	46
3.10	Grade And Side Slope	47
3.11	Platform Extension	47

3.12 Parking and Stowing Machine....48
3.13 Platform Rails Fold-Down Procedure (If Equipped)....50
3.14 Machine Lifting And Tie Down....51
3.15 Towing....53
3.16 Safety Decal Locations....54
3.17 Safety Decal Legend....55

SECTION 4
EMERGENCY PROCEDURES....59

4.1 General....59
4.2 Incident Notification....59
4.3 Emergency Operation....59
4.4 Platform Manual Descent....60

SECTION 5
ACCESSORIES....63

5.1 Available Accessories....63
5.2 Anti-Vandalism Package....64
5.3 DC/AC Power Inverter....65
5.4 Footswitch....67
5.5 JLG Mobile Control®....67
5.6 Magnetic Gate Latch....69
5.7 SkySense®....70

SECTION 6
GENERAL SPECIFICATIONS AND OPERATOR MAINTENANCE....75

6.1 General....75
6.2 Other Publications Available....75
6.3 Serial Number Identification....75
6.4 Machine Specifications....76
6.5 Lubrication....79
6.6 Hydraulic Oil Check Procedure....81
6.7 Scissor Arm — Safety Prop....82
6.8 Battery Maintenance and Charging....83
6.9 Battery Quick-Disconnect....86
6.10 Tires and Wheels....86
6.11 Diagnostic Trouble Codes (DTC)....88
6.12 Supplemental Information Only Applicable to CE/UKCA Machines....98

6.13 EC Declaration of Conformity 99
6.14 UKCA Declaration of Conformity 100

This Page is intentionally left blank

SECTION 1
Safety Precautions

1.1 GENERAL

This section outlines the necessary precautions for proper and safe machine usage and maintenance. It is mandatory that a daily routine is established based on the content of this manual to promote proper machine usage. A maintenance program, using the information provided in this manual and the Service & Maintenance Manual, must also be established by a qualified person and must be followed to ensure that the machine is safe to operate.

The owner/user/operator/lessor/lessee of the machine must not accept operating responsibility until this manual has been read, training is accomplished, and operation of the machine has been completed under the supervision of an experienced and qualified operator.

This section contains the responsibilities of the owner, user, operator, lessor, and lessee concerning safety, training, inspection, maintenance, application, and operation. If there are any questions with regard to safety, training, inspection, maintenance, application, and operation, please contact JLG Industries, Inc. ("JLG").

⚠ WARNING

Failure to comply with the safety precautions listed in this manual could result in machine damage, property damage, personal injury or death.

1.2 PRE-OPERATION

1.2.1 Operator Training and Knowledge

- Read, understand, and study the Operation & Safety Manual in its entirety before operating the machine. For clarification, questions, or additional information regarding any portions of this manual, contact JLG Industries, Inc.

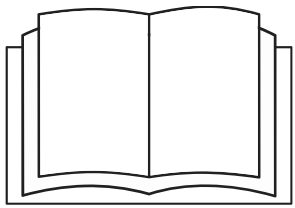

- Only personnel who have received proper training regarding the inspection, application and operation of MEWPs (including recognizing and avoiding hazards associated with their operation) shall be authorized to operate a MEWP.

- Only properly trained personnel who have received unit-specific familiarization shall operate a MEWP. The user shall determine if personnel are qualified to operate the MEWP prior to operation.
- Read, understand, and obey all DANGERS, WARNINGS, CAUTIONS, and operating instructions on the machine and in this manual.
- Ensure that the machine is to be used in a manner which is within the scope of its intended application as determined by JLG.
- All operating personnel must have a thorough understanding of the intended purpose and function of the MEWP controls, including platform, ground and emergency descent controls.
- Read, understand, and obey all applicable employer, local, and governmental regulations as they pertain to your utilization and application of the machine.

1.2.2 Workplace Inspection

- Precautions to avoid all hazards in the work area must be taken by the user before and during operation of the machine.
- Do not operate or raise the platform from a position on trucks, trailers, railway cars, floating vessels, scaffolds or other equipment unless the application is approved in writing by JLG.
- Before operation, check work area for overhead hazards such as electric lines, bridge cranes, and other potential overhead obstructions.
- Check operating surfaces for holes, bumps, drop-offs, obstructions, debris, concealed holes, and other potential hazards.
- Check the work area for hazardous locations. Do not operate the machine in hazardous environments unless approved for that purpose by JLG.
- Ensure that the ground conditions are adequate to support the maximum tire load indicated on the tire load decals located on the chassis adjacent to each wheel. Do not travel on unsupported surfaces.
- This machine can be operated in nominal ambient temperatures of 0° F to 104° F (-20° C to 40° C). Consult JLG to optimize operation outside of this temperature range.

1.2.3 Machine Inspection

- Do not operate this machine until the inspections and functional checks as specified in the User Responsibilities, Machine Preparation, and Inspection Section of this manual have been performed.
- Do not operate this machine until it has been serviced and maintained according to the maintenance and inspection requirements as specified in the machine's Service & Maintenance Manual.
- Ensure all safety devices are operating properly. Modification of these devices is a safety violation.

⚠ WARNING

Modification or alteration of a MEWP shall be made only with prior written permission from the manufacturer.

- Do not operate any machine on which the safety or instruction placards or decals are missing or illegible.
- Check the machine for modifications to original components. Ensure that any modifications have been approved by JLG.
- Avoid accumulation of debris on platform floor. Keep mud, oil, grease, and other slippery substances from footwear and platform floor.

1.3 OPERATION

1.3.1 General

- Machine operation requires your full attention. Bring the machine to a full stop before using any device, i.e. cell phones, two-way radios, etc. that will distract your attention from safely operating the machine.
- Do not use the machine for any purpose other than positioning personnel, their tools, and equipment.
- Before operation, the user must be familiar with the machine capabilities and operating characteristics of all functions.
- Never operate a malfunctioning machine. If a malfunction occurs, shut down the machine. Remove the unit from service and notify the proper authorities.
- Do not remove, modify, or disable any safety devices.
- Never slam a control switch or lever through neutral to an opposite direction. Always return switch to neutral and stop before moving the switch to the next function. Operate controls with slow and even pressure.
- Do not allow personnel to tamper with or operate the machine from the ground with personnel in the platform, except in an emergency.
- Do not carry materials directly on platform railing unless approved by JLG.
- When two or more persons are in the platform, the operator shall be responsible for all machine operations.
- Always ensure that power tools are properly stowed and never left hanging by their cord from the platform work area.
- Do not assist a stuck or disabled machine by pushing or pulling except by pulling at the chassis tie-down lugs.
- Fully lower platform and shut off all power before leaving machine.

- Remove all rings, watches, and jewelry when operating machine. Do not wear loose fitting clothing or long hair unrestrained which may become caught or entangled in equipment.
- Persons under the influence of drugs or alcohol or who are subject to seizures, dizziness or loss of physical control must not operate this machine.
- Hydraulic cylinders are subject to thermal expansion and contraction. This may result in changes to the platform position while the machine is stationary. Factors affecting thermal movement can include the length of time the machine will remain stationary, hydraulic oil temperature, ambient air temperature, and platform position.

1.3.2 Trip and Fall Hazards

- Prior to operation, ensure all gates and rails are fastened and secured in their proper position.

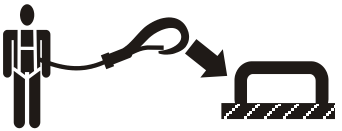

- JLG Industries, Inc. recommends that all persons in the platform wear a full body harness with a lanyard attached to an authorized lanyard anchorage point while operating this machine. For further information regarding fall protection requirements on JLG products, contact JLG Industries, Inc.
- Identify the designated lanyard anchorage point (s) at the platform and securely attach the lanyard. Attach only one (1) lanyard per lanyard anchorage point.
- Enter and exit only through gate area. Use extreme caution when entering or leaving platform. Ensure that the platform assembly is fully lowered. Face the machine when entering or leaving the platform. Always maintain “three point contact” with the machine, using two hands and one foot or two feet and one hand at all times during entry and exit.

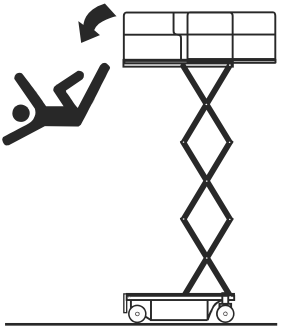

- Keep both feet firmly positioned on the platform floor at all times. Never position ladders, boxes, steps, planks, or similar items on unit to provide additional reach for any purpose.

- Never use the scissor arm assembly to gain access to or leave the platform.
- Keep oil, mud, and slippery substances cleaned from footwear and the platform floor.

1.3.3 Electrocution Hazards

- This machine is not insulated and does not provide protection from contact with or proximity to electrical current.
- It is not recommended to use the machine during lightning. To prevent injury or machine damage if lightning occurs during operation, lower the boom and shut down the machine in a safe and secure location.

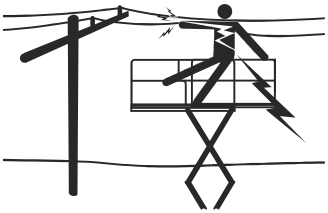

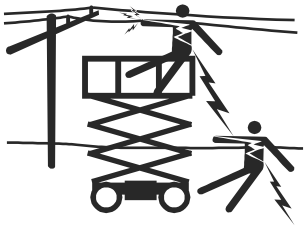

- Maintain distance from electrical lines, apparatus, or any energized (exposed or insulated) parts according to the Minimum Approach Distance (MAD) as shown in *Table — Minimum Approach Distances (MAD), page 17*.
- Allow for machine movement and electrical line swaying.

Table 1. Minimum Approach Distances (MAD)

Voltage Range (Phase to Phase)	Minimum Approach Distance in Feet (Meters)
0 to 50 KV	10 (3)
Over 50K V to 200 KV	15 (5)
Over 200 KV to 350 KV	20 (6)
Over 350 KV to 500 KV	25 (8)
Over 500 KV to 750 KV	35 (11)
Over 750 KV to 1000 KV	45 (14)
Note: This requirement shall apply except where employer, local or governmental regulations are more stringent.	

- Maintain a clearance of at least 10 ft (3m) between any part of the machine and its occupants, their tools, and their equipment from any electrical line or apparatus carrying up to 50,000 volts. One foot additional clearance is required for every additional 30,000 volts or less.

- The MAD may be reduced if insulating barriers are installed to prevent contact, and the barriers are rated for the voltage of the line being guarded. These barriers shall not be part of (or attached to) the machine.
- The MAD shall be reduced to a distance within the designed working dimensions of the insulating barrier. This determination shall be made by a qualified person with respect to electrical transmission and distribution in accordance with the employer, local, or governmental requirements for work practices near energized equipment.

⚠ DANGER

Do not maneuver machine or personnel inside prohibited zone (MAD). Assume all electrical parts and wiring are energized unless known otherwise.

1.3.4 Tipping Hazards

- Ensure that the ground conditions are adequate to support the maximum tire load indicated on the tire load decals located on the chassis adjacent to each wheel. Do not travel on unsupported surfaces.
- The user must be familiar with the operating surface before driving. Do not exceed the allowable side slope and grade while driving.

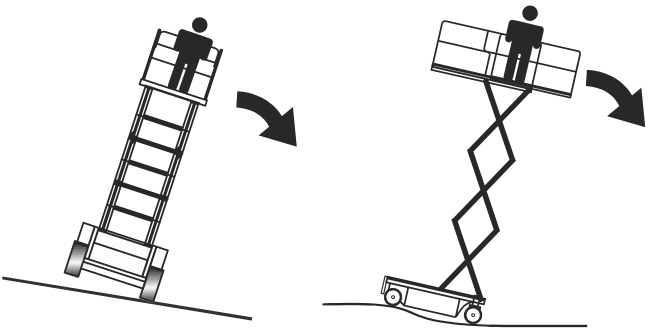

- Do not elevate platform or drive with platform elevated while on or near a sloping, uneven, or soft surface.
- Ensure machine is positioned on a smooth, firm surface within the limits of the maximum operating slope before elevating platform or driving with the platform in the elevated position.
- Before driving on floors, bridges, trucks, and other surfaces, check allowable capacity of the surfaces.
- Never exceed the maximum platform capacity as specified on the platform. Keep all loads within the confines of the platform, unless authorized by JLG.
- Keep the chassis of the machine a minimum of 2 ft (0.6m) from holes, bumps, drop-offs, obstructions, debris, concealed holes, and other potential hazards at the ground level.

- Do not push or pull any object with the machine.
- Never attempt to use the machine as a crane. Do not tie-off machine to any adjacent structure. Never attach wire, cable, or any similar items to platform.
- If the scissor arm assembly or platform is caught so that one or more wheels are off the ground, all persons must be removed before attempting to free the machine. Use cranes, forklift trucks, or other appropriate equipment to stabilize machine.
- Do not operate the machine when wind conditions, including gusts, exceed specifications shown in the Machine Specifications and Operator Maintenance section. Refer to *Table — Beaufort Scale (For Reference Only), page 20*. Factors affecting wind speed are; platform elevation, surrounding structures, local weather events, and approaching storms.
- Wind speed can be significantly greater at height than at ground level.
- Wind speed can change rapidly. Always consider approaching weather events, the time required to lower the platform, and methods to monitor current and potential wind conditions.
- Do not cover or increase surface area of the platform or the load. Do not carry large surface area items in the platform when operating outdoors. The addition of such items increases the exposed wind area of the machine. Increased areas exposed to wind will decrease stability.
- Do not increase the platform size with unauthorized modifications, deck extensions, or attachments.

⚠ WARNING

Do not operate the machine when wind conditions exceed specifications shown in the General Specifications section of this manual or as shown on the capacity placard on the platform billboard.

Table 2. Beaufort Scale (For Reference Only)

Beaufort Number	Wind Speed		Description	Land Conditions
	mph	m/s		
0	0	0-0.2	Calm	Calm. Smoke rises vertically
1	1-3	0.3-1.5	Light air	Wind motion visible in smoke
2	4-7	1.6-3.3	Light breeze	Wind felt on exposed skin. Leaves rustle
3	8-12	3.4-5.4	Gentle breeze	Leaves and smaller twigs in constant motion
4	13-18	5.5-7.9	Moderate breeze	Dust and loose paper raised. Small branches begin to move.
5	19-24	8.0-10.7	Fresh breeze	Smaller trees sway.
6	25-31	10.8-13.8	Strong breeze	Large branches in motion. Flags waving near horizontal. Umbrella use becomes difficult.
7	32-38	13.9-17.1	Near Gale/Moderate Gale	Whole trees in motion. Effort needed to walk against the wind.
8	39-46	17.2-20.7	Fresh Gale	Twigs broken from trees. Cars veer on road.
9	47-54	20.8-24.4	Strong Gale	Light structure damage.

1.3.5 Crushing and Collision Hazards

- Approved head gear must be worn by all operating and ground personnel.
- Watch for obstructions around machine and overhead when driving. Check clearances above, on sides, and bottom of platform during all operations.

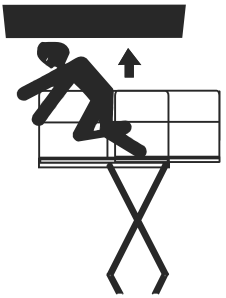

- During operation, keep all body parts inside platform railing.
- Keep hands and limbs out of the scissor arm assembly during operation and when elevated without safety prop engaged.
- Always post a lookout when driving in areas where vision is obstructed.

- Keep non-operating personnel at least 6 ft (1.8 m) away from machine during all operations.
- Under all travel conditions, the operator must limit travel speed according to conditions of ground surface, congestion, visibility, slope, location of personnel, and other factors.
- Be aware of stopping distances in all drive speeds. When driving in high speed, reduce drive speed before stopping. Travel grades in low speed only.
- Do not use high speed drive in restricted or close quarters or when driving in reverse.
- Exercise extreme caution at all times to prevent obstacles from striking or interfering with operating controls and persons in the platform.
- Ensure that operators of other overhead and floor level machines are aware of the MEWP's presence. Disconnect power to overhead cranes. Barricade floor area if necessary.
- Do not operate over ground personnel. Warn personnel not to work, stand, or walk under a raised boom or platform. Position barricades on floor if necessary.

⚠ WARNING

If driving machine with the platform control station from ground, do not hang the control box on any part of the machine while driving. Hold the control box and keep at least 3 ft (1 m) distance from machine.

1.4 TOWING, LIFTING, AND HAULING

- Never allow personnel in platform while towing, lifting, or hauling.
- This machine should not be towed, except in the event of emergency, malfunction, power failure, or loading/unloading. Refer to the Emergency Procedures section of this manual for emergency towing procedures.
- Ensure platform is fully retracted and completely empty of tools prior to towing, lifting or hauling.
- When lifting machine with a forklift, position forks only at designated areas of the machine. Lift with a forklift of adequate capacity.
- Refer to the Machine Operation section of this manual for lifting information.

1.5 MAINTENANCE

This sub-section contains general safety precautions which must be observed during maintenance of this machine. Additional precautions to be observed during machine maintenance are inserted at the appropriate points in this manual and in the Service and Maintenance Manual. It is of utmost importance that maintenance personnel pay strict attention to these precautions to avoid possible injury to personnel or damage to the machine or property. A maintenance program must be established by a qualified person and must be followed to ensure that the machine is safe.

1.5.1 Maintenance Hazards

- Shut off power to all controls and ensure that all moving parts are secured from inadvertent motion prior to performing any adjustments or repairs.
- Never work under an elevated platform until it has been fully lowered to the full down position, if possible, or otherwise supported and restrained from movement with appropriate safety props, blocking, or overhead supports.
- DO NOT attempt to repair or tighten any hydraulic hoses or fittings while the machine is powered on or when the hydraulic system is under pressure.
- Always relieve hydraulic pressure from all hydraulic circuits before loosening or removing hydraulic components.
- DO NOT use your hand to check for leaks. Use a piece of cardboard or paper to search for leaks. Wear gloves to help protect hands from spraying fluid.



- Use only replacement parts or components that are approved by JLG. To be considered approved, replacement parts or components must be identical or equivalent to original parts or components.
- Never attempt to move heavy parts without the aid of a mechanical device. Do not allow heavy objects to rest in an unstable position. Ensure adequate support is provided when raising components of the machine.
- Use only approved non-flammable cleaning solvents.
- Do not replace items critical to stability, such as batteries or solid tires, with items of different weight or specification. Do not modify the MEWP in any way to affect stability.
- Refer to the Service & Maintenance Manual for the weights of critical stability items.

⚠ WARNING

Modification or alteration of a MEWP shall be made only with prior written permission from the manufacturer.

1.5.2 Battery Hazards

- Always disconnect batteries when servicing electrical components or when performing welding on the machine.
- Do not allow smoking, open flame, or sparks near battery during charging or servicing.
- Do not contact tools or other metal objects across the battery terminals.
- Always wear hand, eye, and face protection when servicing batteries. Ensure that battery acid does not come in contact with skin or clothing.

⚠ CAUTION

Battery fluid is highly corrosive. Avoid contact with skin and clothing at all times. Immediately rinse any contacted area with clean water and seek medical attention.

- Charge batteries only in a well ventilated area.
- Avoid overfilling the battery fluid level. Add distilled water to batteries only after the batteries are fully charged.

This Page is intentionally left blank

SECTION 2
User Responsibilities, Machine Preparation, and Inspection

2.1 PERSONNEL TRAINING

The Mobile Elevating Work Platform (MEWP) is a personnel handling device, so it is necessary that it be operated and maintained only by trained personnel.

2.1.1 Operator Training

Operator training must cover:

1. Reading and understanding the Operation and Safety Manual.
2. Thorough understanding of the intended purpose and function of the MEWP controls, including platform, ground, and emergency descent controls.
3. Control labels, instructions, and warnings on the machine.
4. Applicable regulations, standards, and safety rules.
5. Use of approved fall protection equipment.
6. Enough knowledge of the mechanical operation of the machine to recognize a malfunction or potential malfunction.
7. The safest means to operate the machine where overhead obstructions, other moving equipment, and obstacles, depressions, holes, and drop-offs exist.
8. Means to avoid the hazards of unprotected electrical conductors.
9. Selection of the appropriate MEWP and available options for the work to be performed considering specific job requirements, with involvement from the MEWP owner, user, and/ or supervisor.
10. The responsibility of the operator to ensure all platform occupants have a basic level of knowledge to work safely on the MEWP, and to inform them of applicable regulations, standards, and safety rules.
11. The requirement for familiarization in addition to training.

2.1.2 Training Supervision

Training must be delivered by a qualified person in an open area free of hazards until the trainee has demonstrated the ability to safely control and operate the machine.

2.1.3 Operator Responsibility

The operator must be instructed that they have the responsibility and authority to shut down the machine in case of a malfunction or other unsafe condition of either the machine or the job site.

2.1.4 Machine Familiarization

Note: Responsibilities for familiarization may vary by region.

Only properly trained personnel who have received unit-specific familiarization shall operate a MEWP. The user shall determine if personnel are qualified to operate the MEWP prior to operation. The user shall ensure that after familiarization, the operator operates the MEWP for a sufficient period of time to achieve proficiency. When authorized by the user, self-familiarization can be achieved, if authorized, by a properly trained operator reading, understanding and following the manufacturer's operator's manual.

Prior to user's authorization of an operator to use a specific model of MEWP, the user shall ensure the operator is familiarized on the following:

1. Location of the manual storage compartment and the requirement to ensure the required manual(s) are present on the MEWP;
2. Purpose and function of the machine controls and indicators at the platform and ground control stations;
3. Purpose, location, and function of the emergency controls;
4. Operating characteristics and limitations;
5. Features and devices;
6. Accessories and optional equipment.

2.2 PREPARATION, INSPECTION, AND MAINTENANCE

The following table covers machine inspections and maintenance required by JLG Industries, Inc. Consult local regulations for further requirements for MEWPs. The frequency of inspections and maintenance must be increased as necessary when the machine is used in a harsh or hostile environment, if the machine is used with increased frequency, or if the machine is used in a severe manner.

Table 3. Inspection and Maintenance Table

Type	Frequency	Primary Responsibility	Service Qualification	Reference
Pre-Start Inspection	Before using each day; or whenever there is an Operator change	User or Operator	User or Operator	Operation & Safety Manual
Pre-Delivery Inspection (See Note)	Before each sale, lease, or rental delivery	Owner, Dealer, or User	Qualified JLG Mechanic	Service & Maintenance Manual and applicable JLG inspection form
Frequent Inspection (See Note)	In service for 3 months or 150 hours, whichever comes first or Out of service for a period of more than 3 months or Purchased used	Owner, Dealer, or User	Qualified JLG Mechanic	Service & Maintenance Manual and applicable JLG inspection form
Annual Machine Inspection (See Note)	Annually, no later than 13 months from the date of prior inspection	Owner, Dealer, or User	Factory Trained Service Technician (Recommended)	Service & Maintenance Manual and applicable JLG inspection form
Preventive Maintenance	At intervals as specified in the Service & Maintenance Manual	Owner, Dealer, or User	Qualified JLG Mechanic	Service & Maintenance Manual
Note: Inspection forms are available from JLG. Use the Service & Maintenance Manual to perform inspections.				

NOTICE

JLG Industries, Inc. recognizes a factory trained service technician as a person who has successfully completed the JLG Service Training School for the specified JLG product model.

2.3 PRE-START INSPECTION

The Pre-Start Inspection should include each of the following:

1. **Cleanliness** – Check all surfaces for leakage (oil, fuel, or battery fluid) or foreign objects. Report any leakage to the proper maintenance personnel.

2. **Structure** – Inspect the machine structure for dents, damage, weld or parent metal cracks or other discrepancies.
   Report this to the proper maintenance personnel.

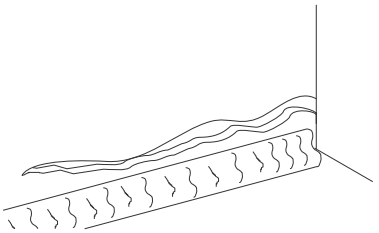

Figure 1. Parent Metal Crack

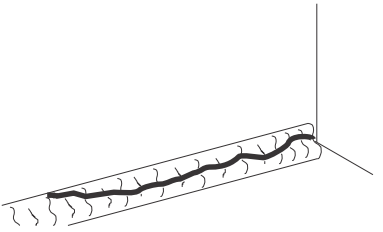

Figure 2. Weld Crack

3. **Decals and Placards** – Check all for cleanliness and legibility. Ensure none of the decals and placards are missing. Ensure all illegible decals and placards are cleaned or replaced (refer to *Section – Decal Installation*).

4. **Operation & Safety Manuals** – Ensure that a copy of the Operation & Safety Manual, AEM Safety Manual (ANSI markets only), and ANSI Manual of Responsibilities (ANSI markets only) is enclosed in the weather resistant storage container.

5. **Walk-Around Inspection** – Perform as instructed in *Section – Walk-Around Inspection*.

6. **Battery** – Charge as required.

7. **Hydraulic Oil** – Check the hydraulic oil level in the pump reservoir, add as required (refer to *Section – Operator Maintenance*).

8. **Accessories/Attachments** – Refer to the Accessories section in this manual or the accessory installed upon the machine for specific inspection, operation, and maintenance instructions.

9. **Function Check** – Once the Walk-Around Inspection is complete, perform a functional check of all systems in an area free of overhead and ground level obstructions. Refer to *Section – Machine Controls, Indicators, And Operation* for more specific instructions on the operation of each function.

10. **Platform Gate** – Keep gate and surrounding area clean and unobstructed. Ensure the gate closes properly and is not bent or damaged. Keep gate closed at all times except when entering/exiting the platform and loading/unloading materials.

11. **Lanyard Attach Points** – JLG Industries, Inc. recommends personnel in the platform wear a full body harness with a lanyard attached to an authorized lanyard anchorage point.

⚠ WARNING

If the machine does not operate properly, turn off the machine immediately! Report the problem to the proper maintenance personnel. Do not operate the machine until it is declared safe for operation.

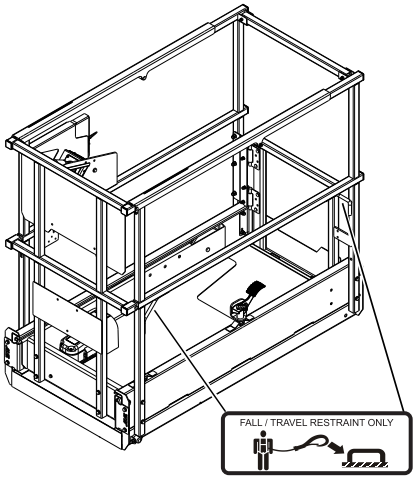

Figure 3. MOL70 Market (Fall/Travel Restraint Only)

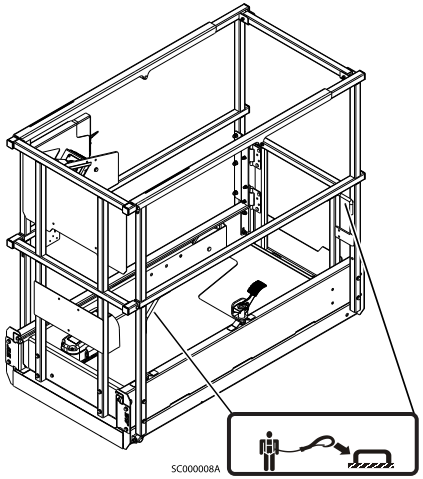

Figure 4. All Other Markets

2.4 WALK-AROUND INSPECTION

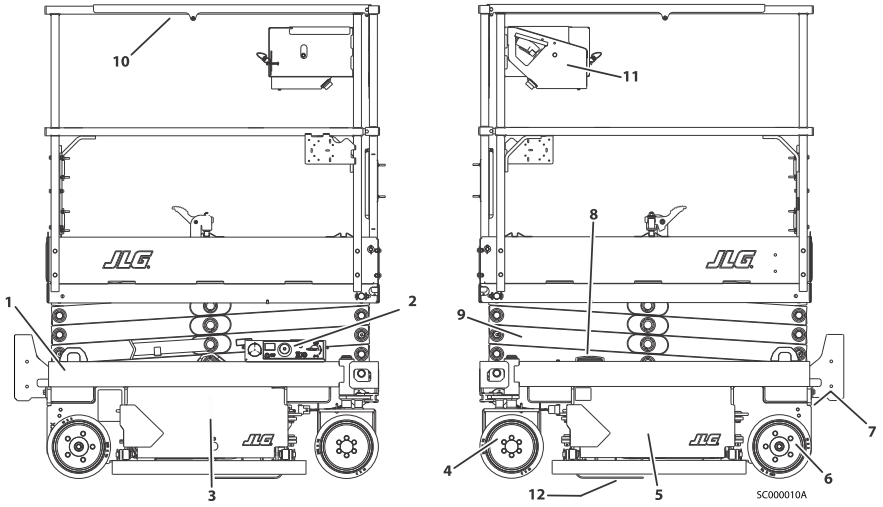

2.4.1 General

Begin the Walk-Around Inspection at Item 1, as noted on the diagram. Continue checking each item in sequence for the conditions listed in the following checklist.

⚠ WARNING

To avoid possible injury, be sure machine power is off. Do not operate machine until all malfunctions have been corrected.

NOTICE

Do not overlook visual inspection of chassis underside. Checking this area may result in discovery of conditions which could cause extensive machine damage.

INSPECTION NOTE: On all components, make sure there are no loose or missing parts, all parts are securely fastened, and no visible damage, leaks, or excessive wear exists in addition to any other criteria mentioned.

1. **Frame/Chassis/Ladder** – See Inspection Note. Ensure that pothole protection (PHP) components on frame are in place, undamaged, not bent or worn. Side compartment doors open and close properly.

2. **Ground Controls** – Placard secure and legible, control switches return to neutral position when activated and released, emergency stop switch functions properly. Control markings legible.

3. **Hydraulic Pump/Motor, Control Valve Installation** – No unsupported wires or hoses; no damaged or broken wires. See Inspection Note.

4. **Front Wheels and Tires** – Wheel bolts properly secured. (refer to wheel and tire information section). Inspect wheels, steer linkage, and steer cylinder for damage and corrosion. See Inspection Note.

5. **Battery Compartment** – See Inspection Note.

6. **Rear Wheels, Tires, Steer Linkage, and Steer Cylinder** – Wheel bolts properly secured (refer to wheel and tire information in *Section — Operator Maintenance*). Inspect wheels, steer linkage, and steer cylinder for damage and corrosion. See Inspection Note.

7. **Manual Descent Control** – See Inspection Note.

8. **Beacon(s) (If Equipped)** – See Inspection Note.

9. **Scissor Arms, Pivot Pins, Sliding Wear Pads, Lift Cylinder** – See Inspection Note.

10. **Platform/Rail Gate Assembly** – Deck extension slides in and out and locks in place properly. Gate closes properly. All fold-down rail pins (if equipped) in place and secure. See Inspection Note.

11. **Platform Control Console** – Ensure that the control console is firmly secured in the proper location. Placards secure and legible, control lever and switches return to neutral when activated and released, and emergency stop switch function properly, required manuals in storage box.

12. **Static Strap** – See Inspection Note.

2.5 FUNCTION CHECK

Perform the Function Check as follows:

1. From the **Ground Control Panel** with no load in the platform:
   a. Ensure that the key selector switch and the platform lift switch operates properly.
   b. Ensure that all machine functions are disabled when the Emergency Stop Button is depressed.
   c. With platform raised a few feet (1 m), ensure that the manual descent control (T-handle located at the left rear of the machine, next to the battery charger) lowers the platform properly.
   d. Check that Pothole Protection system bars are fully lowered when the platform is raised.

Platform Fully Lowered
Pothole Bars Raised

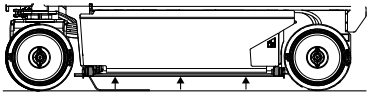

Platform Elevated
Pothole Bars Fully Lowered



2. From the **Platform Control Console:**
   a. Ensure that the control console is firmly secured in the proper location.
   b. Ensure that all guards protecting switches are in place.
   c. Operate all switch functions, drive/lift mode select switch, and horn button.
   d. Operate all platform joystick functions to ensure proper operation of drive, lift, steer, and enable trigger switch operation.
   e. Ensure that all machine functions are disabled when the platform Emergency Stop Button is depressed.
   f. Ensure all machine functions stop when function control is released or when joystick trigger is released.
   g. With the platform elevated on a smooth, firm, level surface with no overhead obstructions, drive the machine to check if the high drive cutout speed limit is engaged at the height indicated in *Table – High Drive Cutout Height, page 32*. Ensure drive speed is reduced from a high speed to a slower speed.

Table 4. High Drive Cutout Height

MODEL	HIGH DRIVE SPEED CUTOUT HEIGHT	DRIVE SPEED REDUCTION
ES1330L ES1530L	37.4 in (0.95 m)	2.0 mph to 0.5 mph (3.2 kph to 0.8 kph)

Note: For MOL70 specification machines, the machine will not drive when elevated above 1.9 m.

3. With the **platform in the transport (stowed) position:**
   a. Drive the machine on a grade, not to exceed the rated gradeability, and stop to ensure the drive motor brakes hold.
   b. Check the tilt indicator light to ensure proper operation. The light should be illuminated if tilted beyond allowed settings in *Table – Tilt Activation Setting, page 33*

Note: When the tilt indicator warning is activated, drive and lift up functions are disabled and the platform must be fully lowered (stowed) to drive

Table 5. Tilt Activation Setting

MODEL	TILT SETTING		Maximum Platform Elevation
	(front to back)	(side to side)	
ES1330L (AUS Market)	3°	1.5° - indoor	37.4 in - 11 ft (0.95 m - 3.35 m)
			11 - 13 ft (3.35 - 3.96 m)
		1.5° - outdoor	37.4 in - 13 ft (0.95 m - 3.96 m)
ES1330L (All Other Markets)	3°	2.25° - indoor	37.4 in - 11 ft (0.95 m - 3.35 m)
		1.75° - indoor	11 - 13 ft (3.35 - 3.96 m)
		1.5° - outdoor	37.4 in - 13 ft (0.95 m - 3.96 m)
ES1530L	3°	3.25° - indoor	37.4 in - 11 ft (0.95 m - 3.35 m)
			11 - 13 ft (3.35 - 3.96 m)
		2.5° - indoor	13 - 15 ft (3.96 - 4.57 m)
		1.5° - outdoor	37.4 in - 10 ft (0.95 m - 3.05 m)

Note: ES1330L is not available in the MOL70 market.

Note: ES1530L is rated for INDOOR USE only in MOL70 and AUS markets.

This Page is intentionally left blank

SECTION 3
Machine Controls, Indicators, and Operation

3.1 GENERAL

NOTICE

The manufacturer has no direct control over machine application and operation, the user and operator are responsible for conforming with good safety practices.

This section provides the necessary information needed to understand machine controls and indicators.

⚠ WARNING

Do not raise platform unless the machine is on a smooth, firm surface, within the limits of the maximum operating slope, free of obstructions and holes.

To avoid serious injury, do not operate machine if any control levers or toggle switches controlling platform movement do not return to the off or neutral position when released.

If the platform does not stop when a control switch or lever is released, use the emergency stop switch to stop the machine.

3.2 DESCRIPTION

This machine is a Mobile Elevating Work Platform (MEWP) used to position personnel along with their necessary tools and materials at work locations. The machine can be used to reach work areas located above machinery or equipment positioned at ground level.

This machine has a primary operator control station in the platform. From this control station, the operator can drive and steer the machine in both forward and reverse directions and raise and lower the platform.

The machine can be driven on a smooth, firm surface within the limits of the maximum operating slope from an elevated platform position. Refer to Steering And Traveling for specific requirements.

The machine also has a ground control station which can override the platform control station. Ground controls operate lift up and down. Except for performing inspections and function checks, ground controls are to be used only in an emergency to lower the platform to the ground should the operator in the platform be unable to do so.

3.3 OPERATING CHARACTERISTICS AND LIMITATIONS

3.3.1 Placards

Important points to remember during operation are provided at the control stations by DANGER, WARNING, CAUTION, NOTICE, IMPORTANT and INSTRUCTION placards. This information is placed at various locations for the express purpose of alerting personnel of potential hazards constituted by the operating characteristics and limitations of the machine. See foreword for definitions of placard safety signal words.

3.3.2 Capacities

Raising platform above horizontal with or without any load in platform is based on the following criteria:

1. Machine is positioned on a smooth, firm surface within the limits of the maximum operating slope.
2. Load is within manufacturer's rated capacity.
3. All machine systems are functioning properly.

3.3.3 Stability

This machine, as originally manufactured by JLG and operated within its rated capacity on a smooth, firm surface, within the limits of the maximum operating slope, provides a stable aerial platform for all platform positions.

3.4 PLATFORM LOADING

The platform maximum rated load capacity is shown on a placard located on the platform billboard and ground control station and is based upon the machine positioned on a smooth, firm surface within the limits of the maximum operating slope. Refer to *Section – Machine Specifications* for the maximum platform capacity.

The platform is entered through an entry gate at the rear of the platform. Keep entry gate closed at all times except when entering/exiting the platform and loading/unloading materials.

Note: It is important to remember that the load should be evenly distributed on the platform. The load should be placed near the center of the platform when possible.

3.5 MACHINE CONTROL LOCATIONS

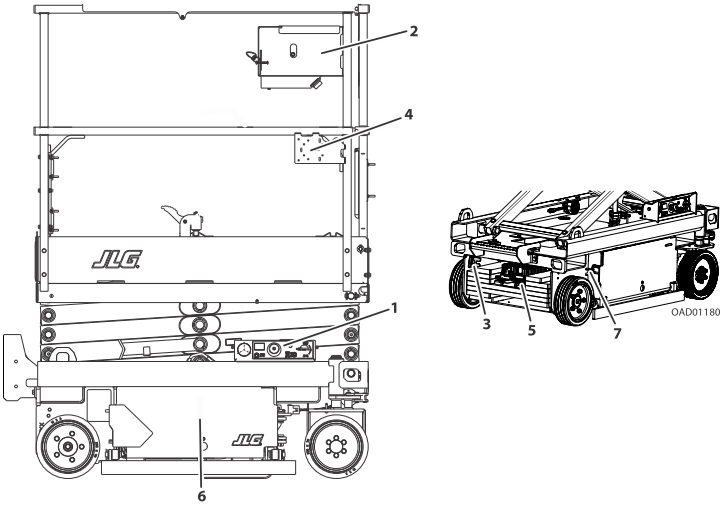

1. Ground Control Station
2. Platform Control Station
3. Platform Manual Descent Control (T-Handle)
4. AC Plug (for Platform AC Receptacle Outlet Box)
5. AC Plug (Battery Charger Input)
6. Side Compartment Doors (Both Sides)
7. Side Compartment Door Latch Location (Both Sides)

3.6 BATTERY CHARGING

Note: Park the machine in a well ventilated area before charging.

⚠ CAUTION

Only plug the charger into a properly installed and grounded outlet. Do not use ground adaptors or modify plug. Do not touch non-insulated portion of output connector or non-insulated battery terminal.

Do not operate charger if the AC supply cord is damaged or if the charger has received a sharp blow, been dropped, or otherwise damaged in anyway.

Always disconnect the charger AC supply before making or breaking the (POS/NEG) connections to the battery.

Do not open or disassemble charger.

The battery charger AC input plug is located inside the frame at the left rear of the machine next to the battery charger. See charger specific information in *Section — General Specifications and Maintenance*.

1. Connect the charger AC input plug to a grounded outlet using a 3 wire heavy duty extension cord.

2. After connecting the charger to an AC outlet at the start of the charging cycle, verify normal operation of the LED indicators on the charger (refer to *Section — Operator Maintenance*).

Note: Current battery charge state can also be seen on the platform control station panel LEDs or the MDI indicator (if equipped) on the ground control station when machine is powered up.

3. The batteries are fully charged when all three GREEN LED indicators on the platform control station or MDI battery charger status panel are illuminated.

Note: If the charger is left plugged in, the charger will automatically restart a complete charge cycle if the battery voltage drops below a minimum voltage, or if 30 days has elapsed.

3.7 GROUND CONTROL STATION

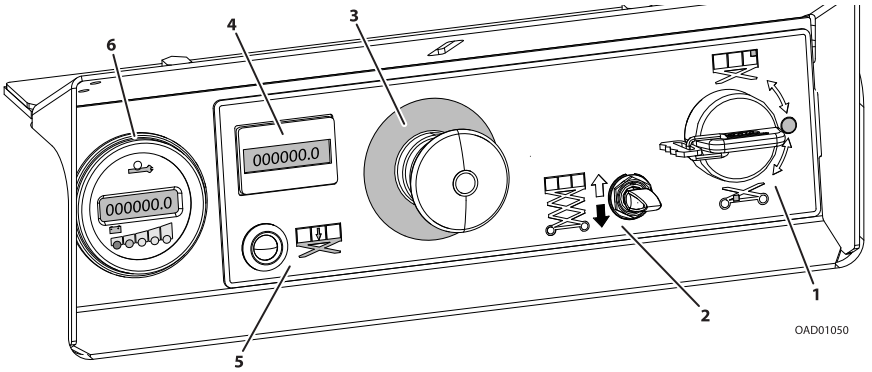

1. Ground/Platform/OFF Key Selector Switch
2. Platform Lift/Lower Switch
3. Ground Emergency Stop Button
4. Hourmeter
5. Overload Indicator
6. MDI Indicator (If Equipped)

3.7.1 Ground Control Station Functions

Ground Emergency Stop Switch
Power is turned on by pulling the switch out, and is turned off by depressing switch. A two-position, red, mushroom-shaped emergency stop switch, when positioned to ON with the key selector switch positioned to ground, furnishes operating power to the ground control station key switch. In addition, the switch can be used to turn off power to the function controls in the event of an emergency.



⚠ WARNING

Do not operate from ground control station with personnel in the platform except in an emergency.

Ground/Platform/OFF Key Selector Switch

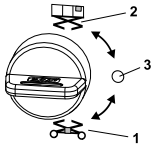

The key selector switch on the Ground Control Station functions to direct electrical power to the desired control station.

With the switch turned to the ground position (1), power is supplied to the controls at the Ground Control Station. When the switch is turned to the platform position (2), power is supplied to the controls at the Platform Control Station. The switch should be set to the off position (3) when not using machine or parking the machine overnight.

Hourmeter

The machine is equipped with an hour meter to indicate the number of hours the machine has been operated.

000000
HOURS

MDI Indicator (If Equipped)

The Multifunction Digital Indicator (MDI) displays a Battery Discharge Indicator (BDI), a LCD display showing the current hourmeter reading, a system distress LED, and Diagnostic Trouble Codes (DTC) when a functional problem occurs with the machine.

When a problem occurs and a DTC Code displayed:

- A LED wrench icon (1) LED illuminates.
- A three to five digit DTC code will display on the DTC LCD display (2) below the wrench icon.

Note: When more than one DTC exists, each DTC will be displayed on the LCD for three seconds before changing to the next DTC. Once the last active DTC is displayed, the display will recycle indefinitely until the DTCs are corrected. For DTCs and descriptions, refer to Diagnostic Trouble Codes.

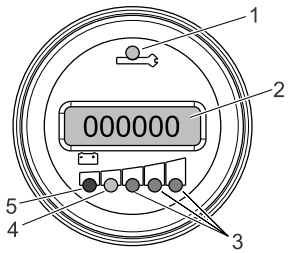

1. System Fault LED Indicator (RED LED)
2. Hourmeter/DTC Code Display
3. 100% Battery Charge Indicator (GREEN AREA)
4. Battery Charge LOW Indicator (YELLOW AREA)
5. Battery Re-Charge Indicator (RED AREA)

Also located on the MDI are Battery Discharge Indicators (BDI) (3, 4, 5). The three green LEDs indicate the level of charge (voltage) remaining in the batteries.

Note: When the battery voltage is low and will need a charge soon, the yellow LED (4) begin to flash.

BDIs and the hourmeter display under normal operating conditions. When a DTC exists other than 00x DTCs, the BDI LEDs and hourmeter are not be displayed. Additionally, when the platform is elevated and the machine is driving in creep mode, the turtle icon is displayed.

Overload Indicator (LSS)

The Overload Indicator indicates when the platform has been overloaded. An audible alarm will also signal when the platform is overloaded.

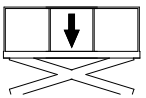

Note: If the Overload Indicator is illuminated, further elevation will be prevented. Reduce the weight in the platform to not exceed the rated workload indicated on the capacity decal, then the controls will work again.

Note: When ambient temperatures are below freezing, the LSS will have a reduction in available capacity. This will trigger the LSS before achieving the maximum allowable capacity.

Platform Lift/Lower Switch

A three position, momentary contact lift control switch provides raising and lowering of the platform from the Ground Control Station.

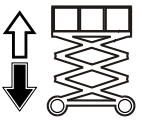

Note: There will be a brief delay between switch activation and movement of the platform.

When operating platform from the ground controls, activate the Lift/Lower switch to up position and hold to raise platform, or down position and hold to lower an elevated platform. Release to stop all movement.

3.8 PLATFORM CONTROL STATION

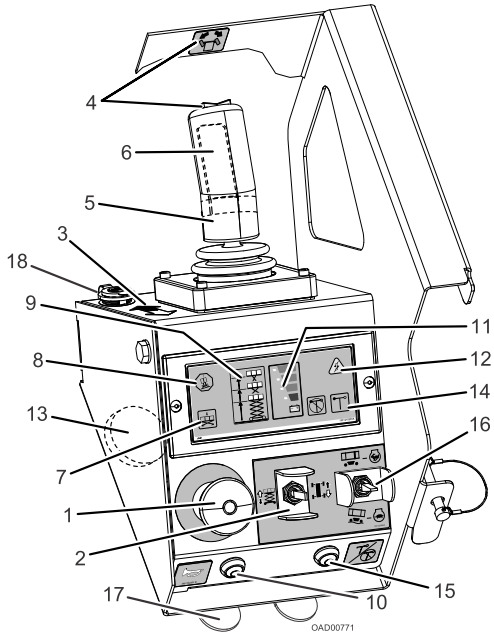

1. Emergency Stop Switch
2. Lift/Drive Select Switch
3. Forward/Reverse/Lift/Lower Directional Arrow
4. Steer Control Switch and Decal
5. Joystick Controller
6. Trigger (Enable) Switch
7. Overload Indicator (LSS)
8. Tilt Indicator
9. Variable Tilt - Platform Restricted Height Indicator
10. Horn Button
11. Battery Charge Indicator
12. System Fault Indicator
13. Alarm
14. Indoor/Outdoor Operation Indicator
15. Indoor/Outdoor Operation Mode Switch
16. Drive Speed Select Switch
17. Mobile Phone Cradle (If Equipped)
18. USB Port (If Equipped)

Note: Machines with this platform control box are rated for Indoor/Outdoor functionality, except the ES1530L machine in MOL70 and AUS markets. ES1530L machines in MOL70 and AUS markets are rated for INDOOR USE only.

3.8.1 Platform Control Station Functions

Alarm
This alarm mounted on the front of the platform control station will sound for various machine conditions or warnings such as, system ready chirp or if the machine tilt warning is activated.

Arm Guards (If Equipped)
If the machine is equipped with electronic arm guards, the platform will stop lowering at a predetermined height and the machine's beacons will flash at a different rate to warn ground personnel. The machine can continue lowering after a three (3) second delay and re-engaging the lowering function. Once the lowering function is re-engaged an audible alarm will sound. After a three second delay, the platform will continue lowering.

Battery Charge Indicator
The battery charge indicator displays the current charge status of the onboard batteries.

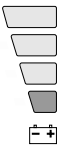

- RED LED flashing = batteries depleted
- RED LED ON solid = batteries low
- RED LED ON and GREEN LEDs ON = batteries FULL charge

Drive/Lift/Steer Joystick Control
Trigger (Enable) Switch - This trigger switch is located on the front of the joystick controller. It acts as an enable and must be depressed before operating the drive, steer, and lift functions. When released, the function in operation will stop.
The speed on all selected functions is proportionally controlled by the distance from the neutral (center) position of the joystick controller.

Note: Once the trigger switch is pressed, the operator has (5) seconds to begin operating a function. After 5 seconds, the trigger switch must be released and pressed again to operate a joystick function.

Note: If the machine is also equipped with a footswitch, depress the footswitch in conjunction with the trigger (enable) switch located on the joystick controller. Power is removed from the platform controls when the footswitch is released.

Steer Switch - The steer switch is a thumb-operated switch located at the top of the joystick controller handle. Depressing the switch to the right will steer the wheels to the right. Depressing the switch to the left will steer the wheels to the left.
Joystick Controller - This controls drive and lift.

Drive Speed Select Switch
The two-position speed switch controls high or low range drive speed. Use high speed in unobstructed open, flat, and level work areas. Use low speed in close work areas with obstacles, other machinery or personnel to avoid.

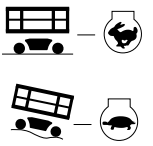

Note: Drive speed automatically reduces to low drive when the platform is raised above the stowed position, regardless of speed switch position.

Emergency Stop Switch

Note: Both the ground and platform emergency stop buttons must be set to ON in order to operate the machine.

When power is directed to the platform from the ground control station, the platform emergency stop switch is turned on by pulling the switch out (on), and is turned off by pushing the switch in (off). The two-position, red, mushroom-shaped emergency stop switch functions to provide power to the platform control station and also to turn off power to machine functions in the event of an emergency.

NOTICE

Always position emergency stop switch to off position (pushed in) when machine is not in use.

Forward/Reverse/Lift/Lower Direction Arrow

This decal indicates the proper direction to mount the platform control box, with the black arrow pointing to the front of the machine. The black/white arrow also indicates the direction to move the joystick control per the lift/drive selector switch decal for the lift and the drive select functions.

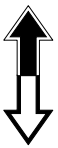

Horn

This push-button switch, when pressed, permits the operator to warn job site personnel when the machine is operating in the area.



Indoor/Outdoor Operation Indicator

The Indoor (GREEN) indicator and the Outdoor (YELLOW) indicator displays which mode the machine is currently set to operate in.

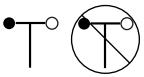

Note: In the MOL70 and AUS markets, ES1530L is rated for INDOOR USE only.

Indoor/Outdoor Operation Mode Switch

This button will toggle between the indoor/outdoor operation modes.

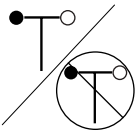

Note: In the MOL70 and AUS markets, ES1530L is rated for INDOOR USE only.
If the Indoor/Outdoor operation mode switch is activated on machines with INDOOR ONLY functionality, the Indoor Operation Indicator will flash and the machine will remain in indoor mode.

Lift/Drive Select Switch

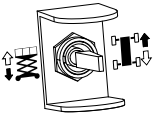

Note: When selecting between the lift and drive functions the joystick control must be returned to the neutral position for approximately 1/2 second before the function change is operable.

This toggle switch is used to select operation of either the drive or lift function. After selecting a function, the joystick controller must be used in order to activate that function. Only change the function selected, with the joystick in the neutral position. Otherwise, the function selected will not change until the joystick is returned to the neutral position.

Mobile Phone Cradle (If Equipped)

Provides an enclosed area for mobile phones in the platform.

Overload Indicator (LSS)

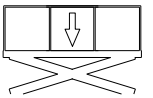

The Overload Indicator indicates when the platform has been overloaded. An audible alarm will also signal when the platform is overloaded.

Note: If the Overload Indicator is illuminated, further elevation will be prevented. Reduce the weight in the platform to not exceed the rated workload indicated on the capacity decal, then the controls will work again.

Note: When ambient temperatures are below freezing, the LSS will have a reduction in available capacity. This will trigger the LSS before achieving the maximum allowable capacity.

Raising And Lowering Platform

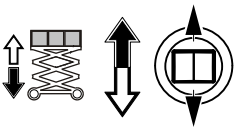

1. If the machine was shut down, place the key selector switch to the platform position.
2. Position both emergency stop switches, to the ON position.
3. Position the lift/drive select switch to lift.
4. Squeeze and hold the trigger switch, and move the joystick back (platform up - white arrow direction) or move the joystick forward (platform down - black arrow direction) and hold until desired elevation is reached. Releasing the trigger switch or moving the joystick back to its center position will stop the function being operated.

Steering

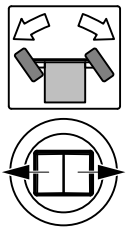

On the platform control station, position the lift/drive select switch to the drive position. To steer the machine, engage trigger switch and the thumb operated steer rocker-switch on the joystick handle. Press to the right for steering right, or to the left for steering left. When released, the switch will return to the center-off position and the wheels will remain in the previously selected position.
To return the wheels to the center position, the switch must be activated in the opposite direction until the wheels are centered.

Steering And Traveling

1. Place key selector switch at the ground control station to platform operation.
2. Position emergency stop switches, one at the platform and one at the ground control station to the ON position.

⚠ WARNING

Do not drive with platform raised except on a smooth, firm surface, within the limits of the maximum operating slope, free of obstructions and holes.

To avoid loss of travel control or upset on grades and side slopes, do not drive machine on grades or side slopes exceeding those specified in Section 6.

Before driving, locate the decals with the black/white orientation arrows on the chassis and the platform controls. Move the joystick in the direction of the black or white arrow that matches the color of the arrow on the chassis for the intended direction of travel.

If the tilt indicator warning light/alarm is activated while driving with platform raised, lower platform completely and drive to a smooth, firm surface, within the limits of the maximum operating slope.

System Fault Indicator

When this indicator light is flashing, a system fault has occurred, possibly stopping machine operation.
Check the MDI Indicator (if equipped) on the Ground Control Station to see if a DTC is displayed.
If the code cannot be cleared by the operator, the machine will require service by a qualified JLG mechanic.



Tilt Indicator Warning Light and Alarm

A red warning light on the control panel illuminates and an audible alarm sounds when the chassis is at or beyond the tilt cutout settings.



⚠ WARNING

If the tilt indicator warning light/alarm is activated when platform is raised, lower platform and drive to a smooth, firm surface, within the limits of the maximum operating slope.

Traveling Forward And Reverse
Position the platform lift/drive select switch to drive/steer position. Squeeze the trigger switch on front of the joystick and move the joystick forward to drive forward, or backward to drive in reverse.
The drive system is proportional: for additional drive speed, push the joystick further from the neutral position in the direction of travel. Releasing the trigger switch or returning the joystick to center will stop machine movement.

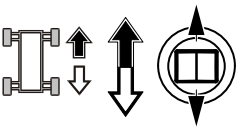

Note: To ensure proper operation of the desired platform function, move the joystick in the direction of the black or white arrow that matches the color of the arrow on the chassis for the intended direction of travel.

USB Port (If Equipped)
Provides a USB port in the platform.

Variable Tilt - Platform Restricted Height Indicator
This indicator shows the maximum allowable platform elevation when the machine is within the limits of the variable tilt envelope. When activated, allowable platform height will be shown in one of three height ranges, depending on the amount of tilt detected by the machine's tilt sensor. See tables in Section 2 for tilt angle - platform operating height restrictions.

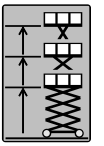

3.9 PLATFORM MANUAL DESCENT

Use the Platform Manual Descent in the event of total power failure to lower the platform using gravity. The manual descent control T-handle is located on the left rear of the machine, just below the platform ladder. Look for the instruction decal located beside the release handle.

The lowering procedure is as follows:

1. Locate the **manual descent control T-handle**.

⚠ WARNING

Keep hands and arms out of the path of the scissor arms and platform while lowering.

2. Grasp the T-handle and slowly pull out to lower the scissor arms/platform. When the platform is lowered to the desired level, allow the T-handle to return to its closed position.

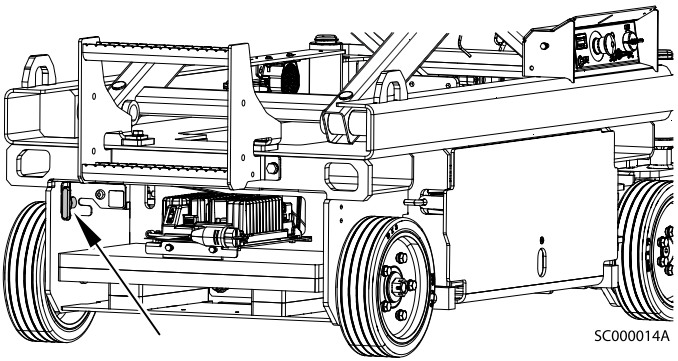

3.10 GRADE AND SIDE SLOPE

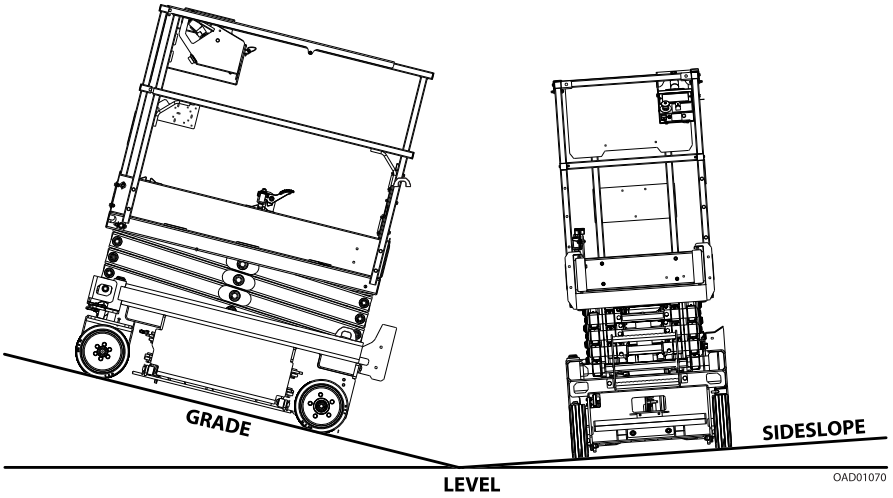

3.11 PLATFORM EXTENSION

This machine is equipped with an extension deck that allows the operator better access to certain work areas. The deck extension adds length to the front of the platform.

⚠ WARNING

For maximum capacity of the deck extension see Machine Specifications section or refer to the capacity placard on the platform billboard.

⚠ CAUTION

Do not lower without completely retracting the platform extension.

To extend the deck:

1. Press foot down on locking mechanism lever (**1**) until it clears the rear platform extension lock (**3**).
2. While holding the lever, grasp the top handrails (**2**) and push forward until the locking mechanism pin locks into the forward platform extension lock (**4** or **5**).

To retract the deck:

1. Press foot down on locking mechanism lever (**1**) until it clears the forward platform extension lock (**4** or **5**).
2. Grasp the top handrails (**2**) and pull back until it the locking mechanism pin locks into the rear platform extension lock (**3**).

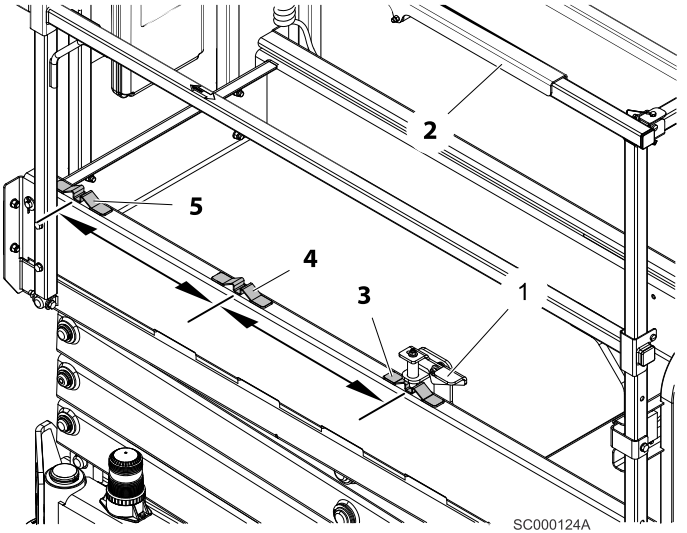

3.12 PARKING AND STOWING MACHINE

1. Drive the machine to a well-protected and well-ventilated area.

2. Ensure the platform is fully lowered.

NOTICE

When the machine is shut down for overnight parking or battery charging, the emergency stop and power select switches must be positioned to off to prevent draining the batteries.

3. At the ground control station, turn the platform - ground selector key switch to OFF and remove the key to disable the machine and prevent unauthorized use.

Note: For added protection, the platform control station can be secured to its mounting plate.
Additionally, the side compartment doors can be secured by placing a padlock through the holes provided just below the door latch on each door.

4. At the ground control station, depress emergency stop switch to the off position.

5. If necessary, cover the platform control box, instruction placards, caution and warning decals so that they will be protected from hostile environment.

6. Chock at least two wheels when parking the machine for an extended period of time.

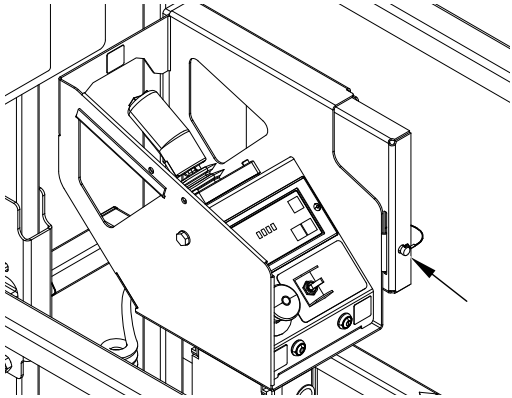

To prevent unauthorized removal, the platform control station can be secured to its mount by replacing the lock pin located on its mounting tab with a keyed or combination lock.

3.13 PLATFORM RAILS FOLD-DOWN PROCEDURE (IF EQUIPPED)

3.13.1 Platform with Dual Rail Extension Deck

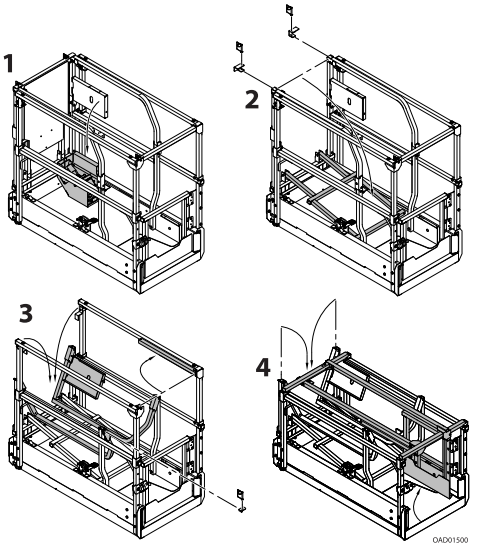

⚠ WARNING

Only fold down the rails when the machine is in the stowed (platform fully lowered) position. Do not raise the platform with the rails folded down. The rails must be in the upright position and properly pinned when raising the platform.

1. Remove platform control box and place on platform deck.
2. Remove two pins at the top front rails, then fold down the front rail panel to the platform floor.
3. Fold down inner extension rails to the platform floor. Remove rail pin at top rear rail and fold in against the right side top rail.
4. Fold down outer platform rails towards the platform floor

To raise rails back to the upright position, unfold the rails in the reverse sequence they were folded and replace the rail pins into the rails.

⚠ WARNING

After the rails have been folded down, use extreme caution when exiting and entering the platform. Enter and exit platform only at the gate area and ladder provided.

⚠ WARNING

If driving machine with the platform control station from ground, do not hang the control box on any part of the machine while driving. Hold the control box and keep at least 3 ft (1 m) distance from machine.

3.14 MACHINE LIFTING AND TIE DOWN

3.14.1 Lifting

The machine may be lifted using a forklift truck. Lift only using the built-in forklift pockets on the side of the machine and only with the platform in the stowed position. First adjust the width of the lifting tines to fit the machine forklift pockets (**1, 2**). Then slide the lifting tines into the forklift pockets and carefully lift machine.

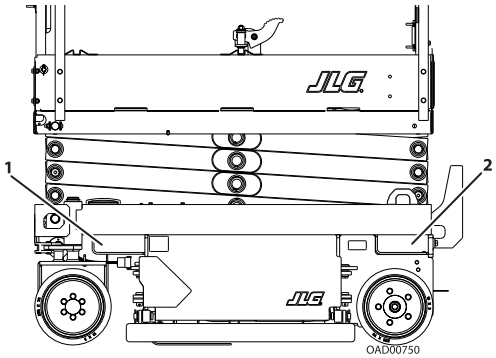

1. Forklift Pocket
2. Forklift Pocket

The machine can also be lifted using a spreader bar and four equal length straps or chains capable of supporting the full gross weight of the machine. Lift only using the two lift lugs at the rear of the frame and the two tie-down/lift lugs at the front of the machine.

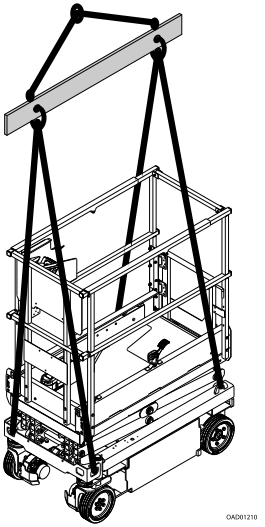

3.14.2 Tie Down

When transporting the machine, fully lower the platform (stowed position) and secure the machine to the truck or trailer deck. There are two tie-down/lift up lugs at the front of the machine and two tie-down lugs at rear of the machine.

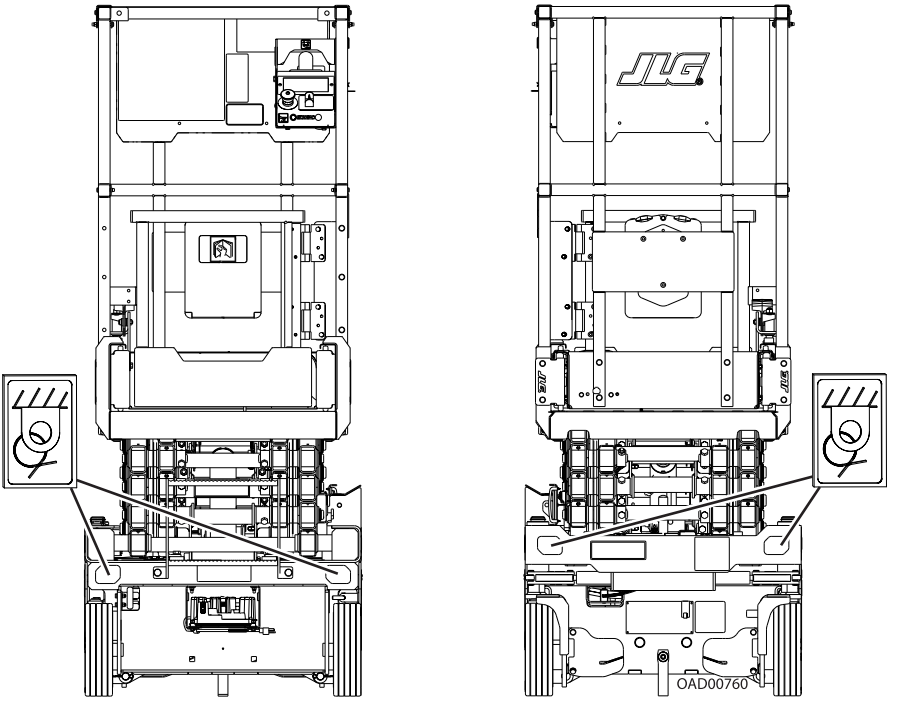

3.15 TOWING

It is not recommended that this machine be towed except in the event of an emergency, such as a machine malfunction or a total machine power failure.

If the machine must be towed, the machine is equipped with a push button to electrically release the brakes. Look for the yellow button in the hydraulic compartment.

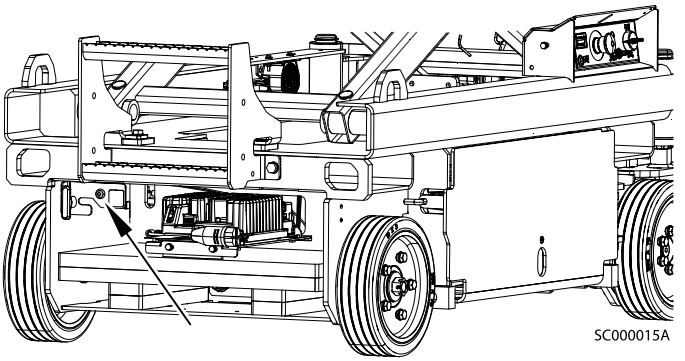

Note: Some components removed for clarity.

1. Chock wheels or secure machine with tow vehicle.

2. Pull out the emergency stop switch and position the keyswitch to ground mode.
3. Press and hold the yellow button for one second to release the brakes. The alarm will sound.
4. To reset the brakes, push the yellow button again, recycle power to the machine, or position the keyswitch to platform mode.

⚠ WARNING

Runaway vehicle/machine hazard. Machine has no towing brakes. Towing vehicle must be able to control machine at all times. On-highway towing is not permitted. Failure to follow instructions could cause serious injury or death.

Maximum towing speed is 2.2 mph (3.5 kph) for no further than 60 feet (18 m).

Maximum towing grade 25%.

3.16 SAFETY DECAL LOCATIONS

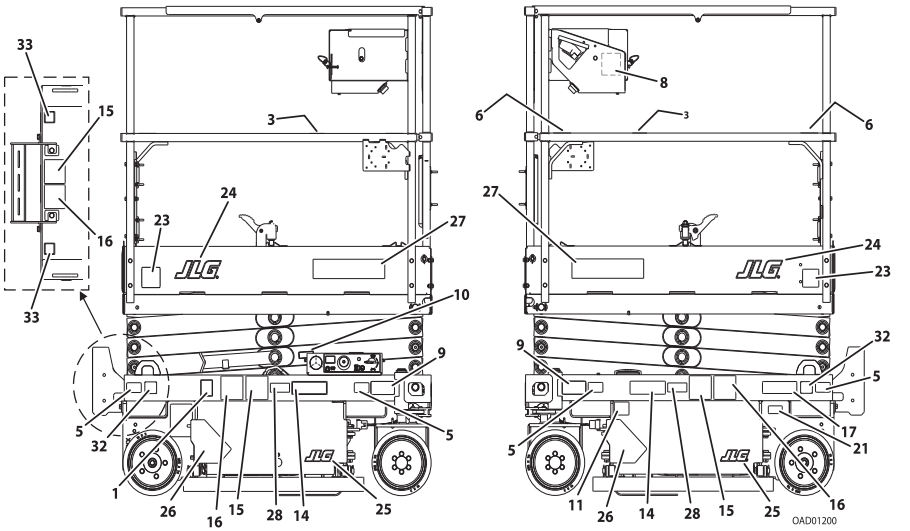

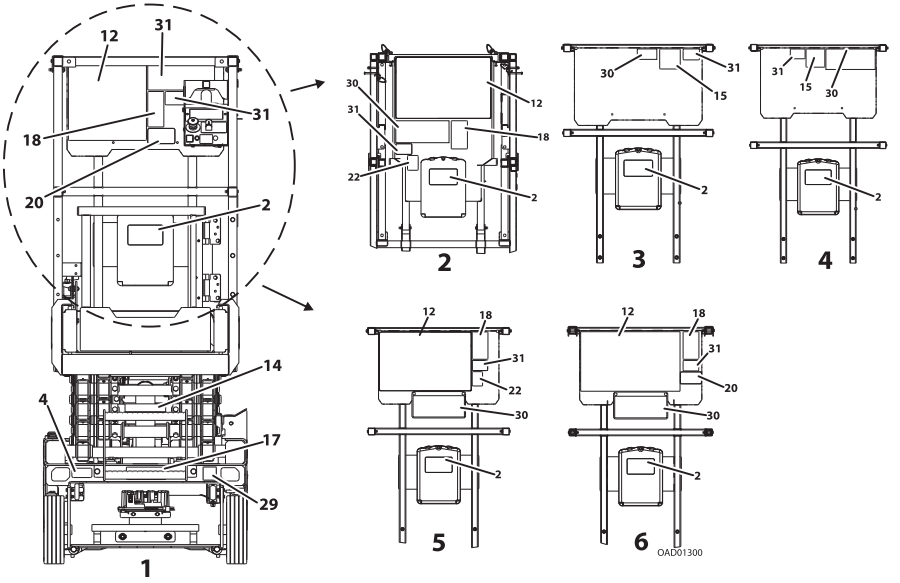

1. ANSI
2. China, Korea (Dual Rails)
3. MOL70, AUS
4. CE/UKCA
5. China, Korea (Fixed Rails)
6. CSA

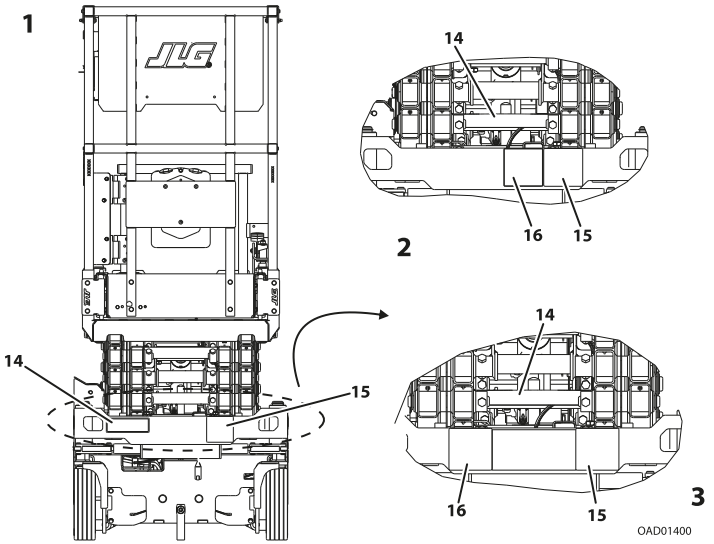

1. ANSI, CE/UKCA, MOL70, AUS
2. China
3. Korea, CSA

3.17 SAFETY DECAL LEGEND

Table 6. ES1330L, ES1530L Decal Legend

ITEM	ENGLISH (1001247301-D)	CSA (1001254501-C)	ENG/KOR (1001247302-D)	ENG/CHI (GB) (1001247303-D)	MOL70 (1001247304-D)	CE/UKCA (1001247305-D)	AUS (1001256628-A)
1	1701504	1701504	1701504	1701504	1701504	1701504	1701504
2	1701640	1701640	1701640	1701640	1701640	1701640	1701640
3	1703819	1703819	1703819	1703819	1703819	1703819	1703819
4	1001248126	1001248126	1001248126	1001248126	1001248126	1001248126	1001248126
5	1704016	1704016	1704016	1704016	1704016	1704016	1704016
6	1704277	1704277	1704277	1704277	1001213582	1704277	1704277
7	1704412	1704412	1704412	1704412	1704412	1704412	1704412
8	1001132359	1001132359	1001132359	1001132359	1001132359	1001132359	1001132359
9	1001162864	1001162864	1001162864	1001162864	1001162864	1001162864	1001162864
10	1001220430	1001220430	1001220430	1001220430	1001220430	1001220430	1001220430
11	1702155	1702155	1702155	1702155	1702155	1702155	1702155
12	1703816	1704684	1001247309	1001247311	–	–	–
13	1001146794	1001146794	1001146794	1001146794	1001146794	–	1001146794
14	1001211777	1705311	1001249893	1001249894	1001219172	1001219172	1001219172
15	1001211779	1001211779	1001211779	1001211779	1001219171	1001219171	1001219171
16	–	1001215749	–	–	–	–	–
17	1703813	1704340	1707022	1704344	1705670	–	1705670

Table 6. ES1330L, ES1530L Decal Legend (continued)

ITEM	ENGLISH (1001247301-D)	CSA (1001254501-C)	ENG/KOR (1001247302-D)	ENG/CHI (GB) (1001247303-D)	MOL70 (1001247304-D)	CE/UKCA (1001247305-D)	AUS (1001256628-A)
18	–	–	–	–	–	–	–
19	1001223055	1001223971	1001224048	1001224051	–	–	–
20	1001231801	1001231801	–	–	–	–	–
21	1001228370	1001228370	–	–	–	–	–
22	–	–	–	1001244301	–	–	–
23	–	–	–	1001244298	–	–	–
24	1001256675	1001256675	1001256675	1001256675	1001256675	1001256675	1001256675
25	1001256676	1001256676	1001256676	1001256676	1001256676	1001256676	1001256676
26	1001249939 (ES1330L) 1001246682 (ES1530L)	1001249939 (ES1330L) 1001246682 (ES1530L)	1001249939 (ES1330L) 1001246682 (ES1530L)	1001249939 (ES1330L) 1001246682 (ES1530L)	1001249939 (ES1330L) 1001246682 (ES1530L)	1001249939 (ES1330L) 1001246682 (ES1530L)	1001249939 (ES1330L) 1001246682 (ES1530L)
27	1001246681 (ES1330L) 1001246682 (ES1530L)	1001246681 (ES1330L) 1001246682 (ES1530L)	1001246681 (ES1330L) 1001246682 (ES1530L)	1001246681 (ES1330L) 1001246682 (ES1530L)	1001246681 (ES1330L) 1001246682 (ES1530L)	1001246681 (ES1330L) 1001246682 (ES1530L)	1001246681 (ES1330L) 1001246682 (ES1530L)
28	1001247660	1001247660	1001247660	1001247660	1001247660	1001247660	1001247660
29	–	–	–	–	–	1001173703	–
30	–	–	–	–	1001246679	–	1001246679

Table 6. ES1330L, ES1530L Decal Legend (continued)

ITEM	ENGLISH (1001247301-D)	CSA (1001254501-C)	ENG/KOR (1001247302-D)	ENG/CHI (GB) (1001247303-D)	MOL70 (1001247304-D)	CE/UKCA (1001247305-D)	AUS (1001256628-A)
31	1001092071	1001092580	–	–	–	–	1001092071
32	1001212290	1001212290	1001212290	1001212290	1001212290	1001212290	1001212290
33	1001212291	1001212291	1001212291	1001212291	1001212291	1001212291	1001212291

SECTION 4
Emergency Procedures

4.1 GENERAL

This section explains the steps to be taken in case of an emergency situation during operation.

4.2 INCIDENT NOTIFICATION

JLG Industries, Inc. must be notified immediately of any incident involving a JLG product. Even if no injury or property damage is evident, JLG must be contacted by telephone and provided with all necessary details.

- USA: 877-JLG-SAFE (554-7233)
- EUROPE: (32) 0 89 84 82 20
- AUSTRALIA: (61) 2 65 811111
- E-mail: productsafety@jlg.com

Failure to notify the manufacturer of an incident involving a JLG Industries product within 48 hours of such an occurrence may void any warranty consideration on that particular machine.

NOTICE

Following any incident, thoroughly inspect the machine. Do not elevate the platform until it is certain that all damage has been repaired and that all controls are operating correctly. Test all functions first from the ground control station then from the platform control console.

4.3 EMERGENCY OPERATION

4.3.1 Use of Ground Controls

NOTICE

Know how to use the ground controls in an emergency situation.

Ground personnel must be thoroughly familiar with the machine operating characteristics and the ground control functions. Training should include operation of the machine, review and understanding of this section and hands-on operation of the controls in simulated emergencies.

4.3.2 Operator Unable to Control Machine

If the platform operator is unable to operate or control the machine:

1. Other personnel should operate the machine from ground controls only as required.
2. Only qualified personnel on the platform may use the platform controls. DO NOT CONTINUE OPERATION IF CONTROLS DO NOT FUNCTION NORMALLY.
3. Rescue equipment can be used to remove the platform occupant(s). Cranes and forklifts can be used to stabilize motion of the machine.

4.3.3 Platform Caught Overhead

If the platform becomes jammed or snagged in overhead structures or equipment, do the following:

1. Shut off the machine.
2. Rescue all people in the platform before freeing the machine. Personnel must be out of the platform before operating any controls on the machine.
3. Use cranes, forklifts or other equipment to stabilize motion of the machine to prevent a tip over as required.
4. From the ground controls, carefully free the platform from the object.
5. Once clear, restart the machine and return the platform to a safe position.
6. Inspect the machine for damage. If the machine is damaged or does not operate properly, turn off the machine immediately. Report the problem to the proper maintenance personnel. Do not operate the machine until it is declared safe for operation.

4.3.4 Righting of Tipped Machine

A fork truck of suitable capacity or equivalent equipment should be placed under the elevated side of the chassis, with a crane or other suitable lifting equipment used to lift the platform while the chassis is lowered by the forklift or other equipment.

4.4 PLATFORM MANUAL DESCENT

Use the Platform Manual Descent in the event of total power failure to lower the platform using gravity. The manual descent control T-handle is located on the left rear of the machine, just below the platform ladder. Look for the instruction decal located beside the release handle.

The lowering procedure is as follows:

1. Locate the **manual descent control T-handle**.

⚠ WARNING

Keep hands and arms out of the path of the scissor arms and platform while lowering.

2. Grasp the T-handle and slowly pull out to lower the scissor arms/platform. When the platform is lowered to the desired level, allow the T-handle to return to its closed position.

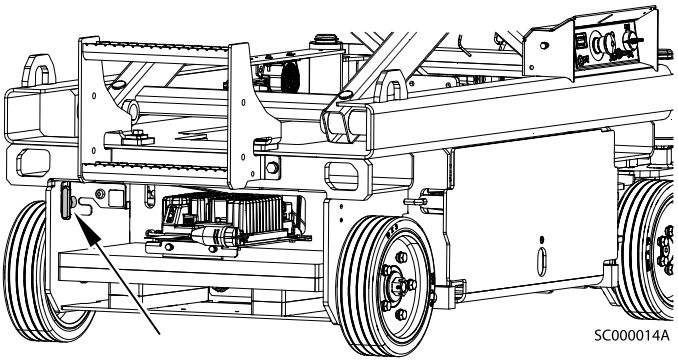

This Page is intentionally left blank

SECTION 5
Accessories

5.1 AVAILABLE ACCESSORIES

Table 7. ES1330L, ES1530L - Available Accessories

ACCESSORY	Market							
	ANSI (USA Only)	ANSI	CSA	Korea	CE/ UKCA	MOL70	China (GB)	AUS
Anti-Vandalism Package	✓	✓	✓	✓	✓	✓	✓	✓
Footswitch				✓		✓		
DC/AC Power Inverter	✓							
JLG Mobile Control®	✓		✓		✓	✓		✓
Magnetic Gate Latch	✓	✓	✓	✓	✓	✓	✓	✓
SkySense®	✓	✓	✓	✓	✓	✓	✓	✓

Table 8. ES1330L, ES1530L - Options/Accessories Relationship Table

ACCESSORY	COMPATIBLE WITH (Note 1)	INCOMPATIBLE WITH
Anti-Vandalism Package	All	None
Footswitch	All	None
DC/AC Power Inverter	All	None
JLG Mobile Control®	All	None
Magnetic Gate Latch	All	None
SkySense®	All	None
Note 1: Any accessory not listed under "COMPATIBLE WITH" is assumed to be incompatible.		

5.2 ANTI-VANDALISM PACKAGE

The Anti-Vandalism Package consists of two lockable covers for the Platform and Ground Control Stations that prevent unauthorized use of the machine. Locks are not provided with this kit. This accessory is available for both control stations.

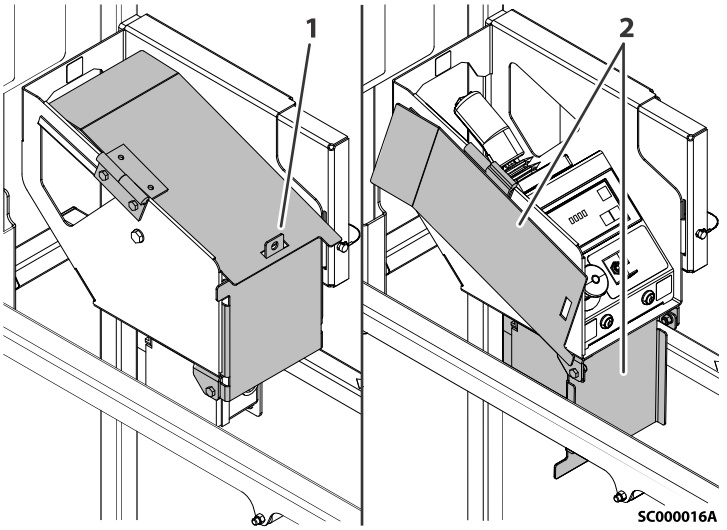

Figure 5. Platform Control Station

1. Lock Position (Covers Closed)
2. Covers Open

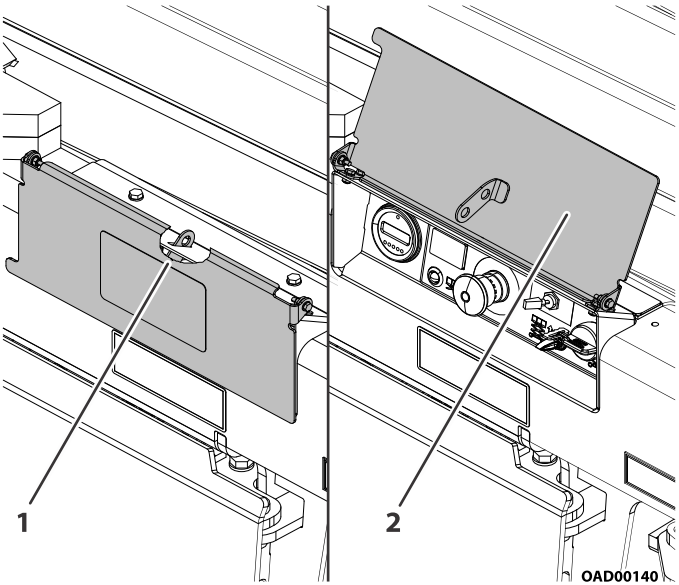

Figure 6. Ground Control Station

1. Lock Position (Cover Closed)
2. Cover Open

5.3 DC/AC POWER INVERTER

The DC to AC Power Inverter converts DC voltage from the onboard system batteries to AC voltage for use at the platform AC output receptacle.

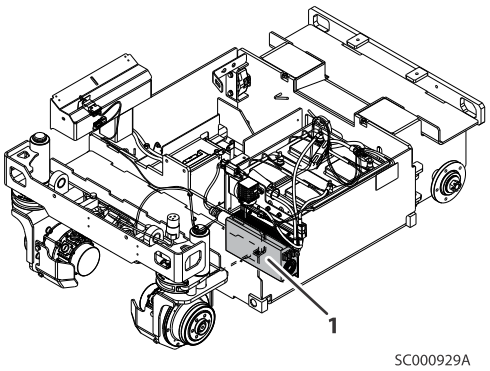

1. Inverter Module

Note: Some components removed for clarity.

5.3.1 Specifications

DESCRIPTION		SPECIFICATION
Electrical System Voltage (DC)		24V
Power Inverter:		Power Bright
DC Input:	DC Input Voltage: Operating Temperature:	20 to 30 VDC -4° F (-20° C) to 113° F (+45° C)
AC Output:	Output Power (Continuous): Output Power (Surge): Output Power (AC): Output Voltage (AC): Output Frequency: Type:	900W 1800W 7.5A 117V+/– 10% 60 Hz Modified Sine Wave
Protection:	Output Reverse DC Polarity:	3 X 25A Replaceable Fuse

5.3.2 Safety Precautions

⚠ DANGER

This accessory may cause shock or electrocution if used improperly. Treat inverter output the same as commercial AC power.

- This inverter will only operate from a 24V power source. Do not attempt to connect the inverter to any other power source, including any AC power source.
- Do not allow water or other liquids to contact the inverter.
- Do not use appliances with damaged or wet cords.
- Route appliance cords and extension cords to prevent accidental pinching, crushing, abrading, and tripping hazards.
- Do not use the inverter near flammable materials or in any locations that may accumulate flammable fumes or gases. This is an electrical device that can briefly spark when electrical connections are made or broken.

5.3.3 Operation

1. Set the inverter ON/OFF switch to the ON position at the ground control station.
2. Only plug in tools or appliances rated within the maximum output wattage at the platform AC receptacle mounted on the platform.

5.4 FOOTSWITCH

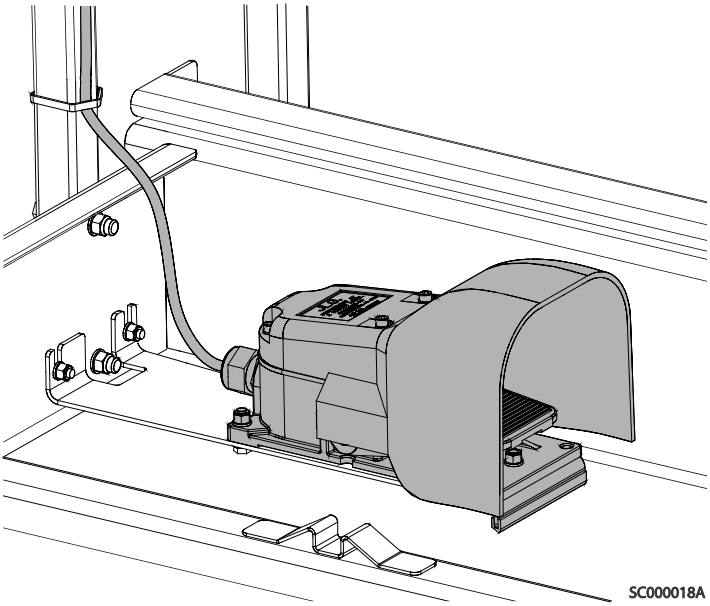

The footswitch serves as another enable switch in the function control circuit. It must be depressed in sequence with the platform control joystick trigger switch to enable operation of machine functions when using the platform controls. Power is removed from the platform controls when the footswitch is released.

Note: This accessory is only available in MOL70 and Korean markets.

5.4.1 Operation

To operate a function, engage the footswitch and joystick trigger in any sequence before operating a function.

5.5 JLG MOBILE CONTROL®

The JLG Mobile Control application allows machine operators to drive remotely from a Bluetooth® equipped hand-held mobile device.

Prior to operation, the operator must scan the QR code on the machine with a mobile device equipped with the JLG Mobile Control application. This pairs the Mobile Control module on the machine with the mobile device to allow remote operation.

Note: The Bluetooth word mark and logos are registered trademarks owned by Bluetooth SIG, Inc. and any use of such marks by JLG is under license. Other trademarks and trade names are those of their respective owners.

5.5.1 Download

Visit the Apple Store®, Google Play®, or **https://www.JLG.com/mobilecontrol** in order to download the JLG Mobile Control application.



OAD00850

5.5.2 Operation

Download, read, and understand the JLG Mobile Control Supplement Manual from **https://www.JLG.com/mobilecontrol** prior to using the JLG Mobile Control.

⚠ WARNING

Never drive the machine using JLG Mobile Control while standing in the platform, or without clear line-of-sight between the machine and its travel path, as serious injury could occur to operator or bystander.

5.5.3 Document Resources

Access to application related documentation.

1. Select Settings (**a.**) from the Home Screen
2. Select either:
   b. JLG Mobile Control Supplement manual
   c. Legal Statements (FCC, ISED)
   d. Regulatory Statements (EULAs, DoC)

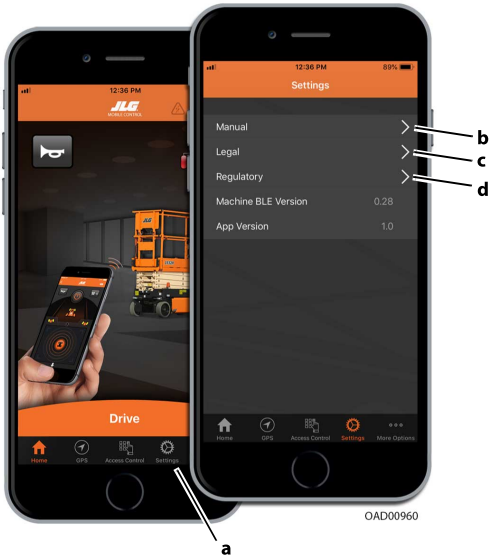

5.6 MAGNETIC GATE LATCH

The Magnetic Gate Latch ensures the platform gate latches securely when closed.

5.6.1 Operation

Grasp handle and swing gate open.

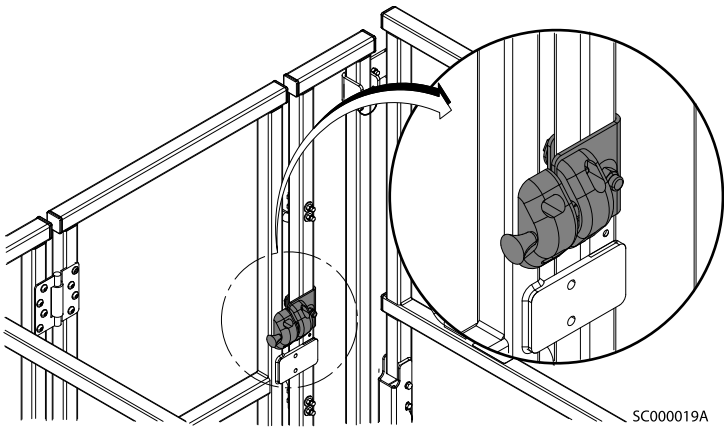

Figure 7. Magnetic Gate Latch Assembly

5.7 SKYSENSE®

5.7.1 General Information

⚠ WARNING

SkySense is not intended to replace or reduce the need for the operator to be aware of the environment around the machine. Hazards that will cause serious injury or death may not be prevented or reduced by SkySense. The operator must always look in the direction of travel, avoid power lines, avoid obstacles that could strike the machine or persons in the platform, and follow all instructions on machine placards and in this manual.

The operator must not rely on SkySense as a substitute for following the instructions and warnings on machine placards and in this manual.

NOTICE

Read and understand these instructions in their entirety before operating the machine.

NOTICE

SkySense is intended to assist the operator. SkySense may not detect certain objects depending on shape, type of material, or orientation of the object to the sensors. It is the operator's responsibility to be aware of their surroundings at all times.

Note: SkySense is not active when operating the machine from the ground controls.

5.7.2 Preparation and Inspection

Pre-Operation Inspection:

1. Inspect each of the SkySense tubes for dents, cracks, or other damage.
2. Inspect each SkySense sensor for any damage to the housing or sensor.

To test the SkySense system:

1. Ensure there are no obstructions within 10 feet around or above the platform and the machine is on a smooth, firm surface within the limits of the maximum operating slope.
2. From the platform control console, lift and lower the platform.
3. Place a hand or object above one of the sensors, then lift up the platform. Platform movement should stop, the LED indicator should be red, and the alarm should sound. If the alarm is muted, the mute button light should be red.

4. Release the joystick and enable switch.
5. Place a hand or object above one of the sensors. Press the override button on the notification unit and lift the platform. The platform should lift, the LED indicator should be red, and the alarm should sound. If the alarm is muted, the mute button light should be red.
6. Remove hand or object from the sensor zone, then release the joystick and enable switch. Lower the platform to stowed.
7. Lift the platform with no hand or object above the sensor. The platform should lift without interruption.
8. Lower the platform to stowed.

5.7.3 Operation

SkySense slows a machine's function speed to creep speed when it is a certain distance away from an object, known as the "warning zone." If the machine continues to approach the object and moves into the "stop zone," SkySense stops all machine functions.

For proportional functions that are activated by the joystick, the size of the warning zone varies based on the amount of joystick activation. The stop zone always activates at the same distance from the object regardless of the joystick's position.

SkySense is active during the following functions:

- Lift Up
- Drive Forward
- Drive Reverse

5.7.4 Notification Assembly

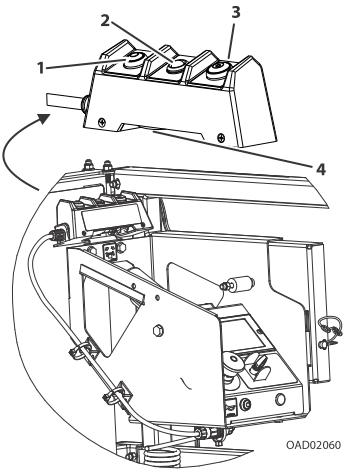

1. Override Button
2. Bi-color LED
3. Indicator Speaker OFF
4. Indicator Speaker (Underneath Unit)

5.7.5 LED Indicator

A bi-color LED indicator on the platform control box signals Sky- Sense activity.

- **No LED:** Normal operation.
- **LED Flashing Yellow:** Machine is in SkySense warning zone and will reduce to elevated drive height speed. Flash frequency correlates to closeness of the object.
- **LED Red:** Machine is in SkySense stop zone and all machine functions will cease.
- **LED Flashing Red:** SkySense sensor is obstructed or damaged. Obstructions must be removed and proper function verified. Damaged sensors must be replaced.

5.7.6 SkySense Alarm

Activation of SkySense is also signalled by an audible alarm that indicates SkySense activity when reaching the warning or stop zones.

In the warning zone, the audible alarm will pulse and increase in frequency as the machine moves closer to the object. In the stop zone, the alarm will sound a continuous tone.

Additionally, when the machine is in the stop zone, the platform control panel audible alarm will sound, indicating activation of the SoftTouch system. Reset the system by releasing the trigger switch.

Audible SkySense alarms can be muted, although LEDs will continue to light.

5.7.7 Override Button

The yellow override button allows operators to bypass normal SkySense operation in order to move closer to an object within the stop zone.

When the operator overrides SkySense via the override button to get closer to a work surface, the machine will maintain creep speed and flash the appropriate indicator color based on location in either the warning or stop zones.

5.7.8 SkySense Coverage Areas

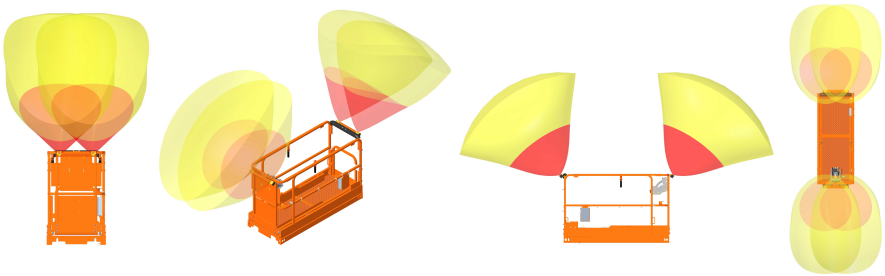

Level One

Note: Sensor Cones shown are approximations for reference only.

This Page is intentionally left blank

SECTION 6
General Specifications and Operator Maintenance

6.1 GENERAL

This section of the manual provides additional necessary information to the operator for proper operation and maintenance of this machine.

The maintenance portion of this section is intended as information to assist the machine operator to perform daily maintenance tasks only and does not replace the more thorough Preventive Maintenance and Inspection Schedule included in the Service & Maintenance Manual.

6.2 OTHER PUBLICATIONS AVAILABLE

Service & Maintenance Manual	31220309
Illustrated Parts Manual	ES1330L — 31220310 ES1530L — 31220311

6.3 SERIAL NUMBER IDENTIFICATION

The serial number plate is fixed to the frame on the front of the machine. Exact size and placement of the plate may vary depending upon market.

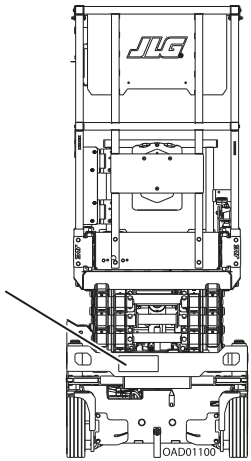

6.4 MACHINE SPECIFICATIONS

6.4.1 Operating Specifications

DESCRIPTION		ES1330L	ES1530L
Gross Vehicle Weight	MOL70 All Other Markets	– 1,975 lb (896 kg)	1,745 lb (792 kg) 1,935 lb (878 kg)
Lift Up Time	No Load Rated Load	11 - 17 sec 14 - 20 sec	13 - 19 sec 16 - 22 sec
Lift Down Time	No Load Rated Load	11 - 17 sec 10 - 16 sec	13 - 19 sec 11 - 17 sec
Ground Clearance	PHP Deployed PHP Retracted Breakover Angle	0.78 in (20 mm) 2.4 in (60 mm) 11.8°	
Electronic Arm Guard Pause Height (CE/UKCA, GB Only)		41 in (1.04 m)	51 in (1.3 m)
High Drive Speed	Rabbit Turtle	2.5 mph (4 kph) 1.25 mph (2 kph)	
Elevated Drive Platform Height		37.4 in (0.95 m)	
Elevated Drive Speed	Rabbit Turtle	0.5 mph (0.8 kph) 0.25 mph (0.4 kph)	
Max. Tire Load		1,365 lb (620 kg)	
Occupied Floor Area		10.98 ft2 (1.02 m2)	
Ground Bearing Pressure	MOL70 All Other Markets	– 119 psi	114 psi 126 psi
Max. Stowed Travel Grade (Gradeability)		25% (14°)	
Max. Stowed Travel Grade (Side Slope)		8.75% (5°)	
Max. Allowable Operating Slope (Elevated)			
	Front to Back	3°	3°
	Side to Side (Indoor - AUS Market Only)	1.5°	2.5°
	Side to Side (Indoor - All Other Markets)	1.75°	2.5°
	Side to Side (Outdoor) *	1.5°	1.5°
* In the MOL70 and AUS markets, ES1530L is rated for INDOOR USE only.			

6.4.2 Platform Capacities

DESCRIPTION	ES1330L	ES1530L
Operating Personnel	2 persons (Indoor) 1 person (Outdoor)	1 person
Platform Rated Load	500 lb (227 kg)	
Extension Deck Rated Load	254 lb (115 kg)	
Maximum Operating Wind Speed Indoor Outdoor	0 mph (0 m/s) 28 mph (12.5 m/s)	
Maximum Horizontal Side Force (Indoor) MOL70 All Other Markets	— 90 lb (400 N)	40 lb (180 N) 45 lb (200 N)
Maximum Horizontal Side Force (Outdoor)	45 lb (200 N)	

Note: INDOOR USE is use of a MEWP in areas shielded from wind so that there is no wind. OUTDOOR USE is use of a MEWP in an environment that can be exposed to wind.
Note: In the MOL70 and AUS markets, ES1530L is rated for INDOOR USE only.

6.4.3 Machine Dimensions

DESCRIPTION	ES1330L	ES1530L (MOL70)	ES1530L (All Other Markets)
Maximum Working Height	18.4 ft (5.6 m)	20.8 ft (6.3 m)	20.8 ft (6.3 m)
Overall Machine Height (Stowed)	71.8 in (182.4 cm)	70.8 in (180 cm)	70.8 in (180 cm) — Fixed Rails 74.8 in (190.1 cm) — Dual Rails
Overall Machine Height (Elevated)	16 ft (4.9 m)	18.2 ft (5.55 m)	18.2 ft (5.55 m) — Fixed Rails 18.5 ft (5.64 m) — Dual Rails
Platform Height (Ground to Platform Floor)			
Stowed	28.1 in (71.4 cm)	31.1 in (79 cm)	31.1 in (79 cm)
Elevated	12.5 ft (3.81 m)	14.9 ft (4.5 m)	14.9 ft (4.5 m)
Safety Prop Engaged	61.8 in (157 cm)	76.2 in (193.5 cm)	76.2 in (193.5 cm)
Rail Height (Platform Floor to Top of Rail)	43.8 in (111.3 cm)	39.9 in (101.3 cm)	43.8 in (111.3 cm) — Fixed Rails 44 in (111.7 cm) —Dual Rails
Overall Machine Width	29.9 in (76 cm)	29.9 in (76 cm)	29.9 in (76 cm)
Overall Machine Length	57.5 in (146.1 cm)	57.5 in (146.1 cm)	57.5 in (146.1 cm)
Extension Deck Length	21.7 in (55.1 cm)	21.7 in (55.1 cm)	21.7 in (55.1 cm)
Wheelbase	42.3 in (107.4 cm)	42.3 in (107.4 cm)	42.3 in (107.4 cm)

6.4.4 Tires

DESCRIPTION	ES1330L, ES1530L
Size	10 in x 3 in (255 mm x 76 mm)
Wheel Bolt Torque (M10 x 1.5 Bolt)	43 ft.lb. (58 Nm)

6.4.5 Batteries

DESCRIPTION	Lead Acid	AGM
Voltage (24V System - Series)	12V per battery	
Amp Hour Rating (@ 20 hr)	130 Ah	115 Ah
Reserve Capacity (@ 25 A)	225 min	235 min
Weight	66.1 lb (30 kg)	

6.5 LUBRICATION

6.5.1 Lubrication Specifications

KEY	SPECIFICATIONS
MPG	Multipurpose Grease having a minimum dripping point of 350° F. Excellent water resistance and adhesive qualities, and being of extreme pressure type. (Timken OK40 pounds minimum.)
EPGL	Extreme Pressure Gear Lube (oil) meeting API service classification GL-5 or MIL-Spec MIL-L-2105.
HO	JLG Recommends - Mobil - Mobilfluid 424 Mobil EAL ENVIRONSYN H 32 Mobil SHC HYDRAULIC EAL 32 EAL and SHC are compatible with each other.

6.5.2 Hydraulic Oil

HYDRAULIC SYSTEM OPERATING TEMPERATURE RANGE	SAE VISCOSITY GRADE
0° F to +23° F (-18° C to -5° C)	10W
0° F to 210° F (-18° C to + 99° C)	10W-20, 10W-30
50° F to 210° F (+10° C to +99° C)	20W-20

Note: Aside from JLG recommendations, it is not advisable to mix oils of different brands or types, as they may not contain the same required additives or be of comparable viscosities.

6.5.3 Lubrication Capacities

COMPONENT	ES1330L, ES1530L
Hydraulic Reservoir (at Full mark)	1.32 gal (5 L)
Hydraulic System (Including Reservoir)	1.45 gal (5.5 L)

6.5.4 Hydraulic Oil Specifications

SPECIFICATION	MOBIL DTE10 EXCEL 15	MOBIL EAL ENVIRONSYN H 32
ISO Viscosity Grade	#15	#32
Spec Gravity API	–	0.950
Pour Point, Max	-65° F (-54° C)	-38° F (-39° C)
Flash Point, Min.	360° F (182° C)	514° F (268° C)
VISCOSITY SPECIFICATIONS		
at 40° C	55 cSt	33.1 cSt
at 100° C	9.3 cSt	6.36 cSt
at 100° F	80 SUS	–
at 210° F	43 SUS	–
cp at -18°C	2700	–
Viscosity Index	168	147
Operating Temperature	–	-20° F (-29° C) to 200° F (93° C)

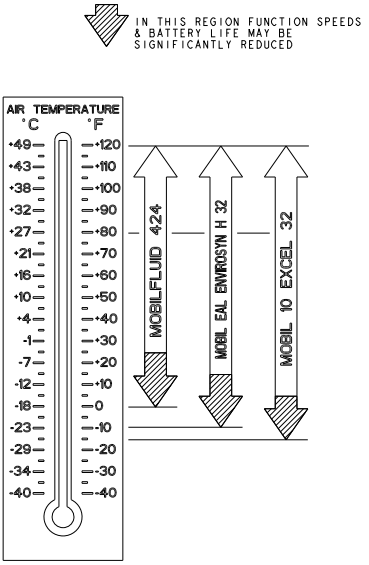

Fluid	Properties		Base				Classification		
Description	Viscosity @ 40°C (cSt, Typical)	Visc Index	Mineral Oils	Vegetable Oils	Synthetic	Synthetic Polyol Esters	Readily Biodegradeable*	Virtually Non-toxic**	Fire Resistant***
Mobilfluid 424	55	145	X						
Mobil EAL Envirosyn H 32	33	147			X		X		
Mobil 10 Excel 32	32	164	X					X	

* Readily biodegradable classification indicates one of the following:
CO2 Conversion>60% per EPA 560/6-82-003
CO2 Conversion>80% per CEC-L-33-A-93
** Virtually Non-toxic classification indicates an LC50>5000 ppm per OECD 203
*** Fire Resistant classification indicates Factory Mutual Research Corp. (FMRC) Approval

NOTICE:
MACHINE OPERATION USING NON-JLG APPROVED HYDRAULIC FLUIDS OR OPERATION OUTSIDE OF THE TEMPERATURE BOUNDARIES OUTLINED IN THE "HYDRAULIC FLUID OPERATION CHART" MAY RESULT IN PREMATURE WEAR OR DAMAGE TO COMPONENTS OF THE HYDRAULIC SYSTEM.

SOME FLUIDS MAY NOT BE AVAILABLE FROM THE FACTORY

1001219909-E
OAD00812

Figure 8. Hydraulic Oil Operating Temperature Chart

6.6 HYDRAULIC OIL CHECK PROCEDURE

Check the hydraulic oil level only when the machine is in the stowed position. Ensure the hydraulic oil has warmed to operating temperature before checking the reservoir.

1. Open the hydraulic compartment door and locate the hydraulic reservoir (**1**).
2. Locate the lines indicating the maximum and minimum levels of hydraulic oil (**2** & **3**) in the reservoir. Ensure the level of oil is between the two lines.
3. If the level of oil in the reservoir is below the minimum level (**3**), more oil is needed. Wipe all dirt and debris from the filler cap (**4**) and surrounding area.
4. Remove filler cap and add proper grade of oil. Fill until oil level is close to the maximum level. Do not overfill.

Note: Take precautions so impurities (dirt, water, etc.) cannot enter the hydraulic system while filter/filter cap is removed.

Note: Recommended lubricating intervals are based on machine operations under normal conditions. For machines used in multi-shift operations and/or exposed to hostile environments or conditions, lubrication frequencies must be increased accordingly.

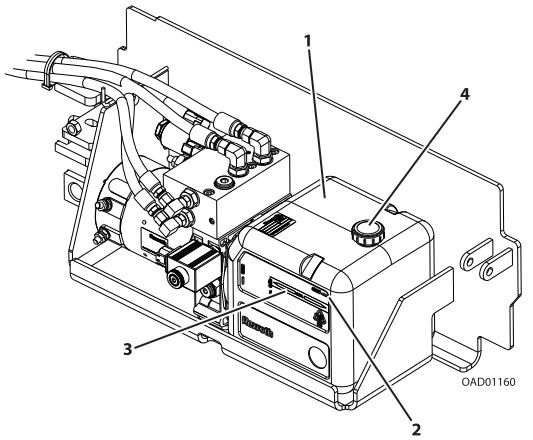

1. Hydraulic Reservoir
2. Maximum Level
3. Minimum Level
4. Filler Cap

6.7 SCISSOR ARM — SAFETY PROP

⚠ WARNING

Never work under an elevated platform until it has been restrained from movement with the safety prop, blocking or overhead sling.

⚠ CAUTION

The safety prop must be used whenever maintenance performed on the machine requires the scissor arms to be raised and only with no load in the platform

The safety prop is located on the side of the scissor arms on the right side of the machine.

To engage the safety prop:

1. From the Ground Control Station, raise the platform far enough to allow the safety prop to be engaged.
2. Rotate the prop assembly clockwise until it hangs vertically on the side of the scissor arms.
3. Lower the platform until the prop rests against the prop stop on the arm set below it, stopping all downward movement of the platform/scissor arm assembly.

4. Turn off machine power by pressing the emergency stop switch at the Ground Control Station.

To disengage the safety prop:

1. Pull out the emergency stop switch at the ground and raise the platform enough to release the prop off the prop stop.

2. Rotate the prop assembly counterclockwise until it is resting on the arm prop holder plate on the side of the scissor arm assembly.

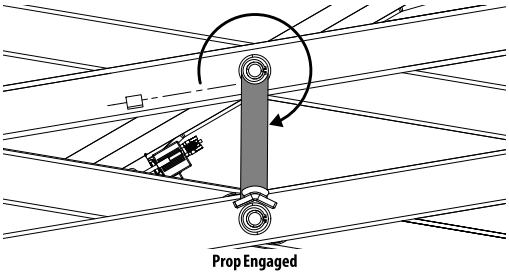

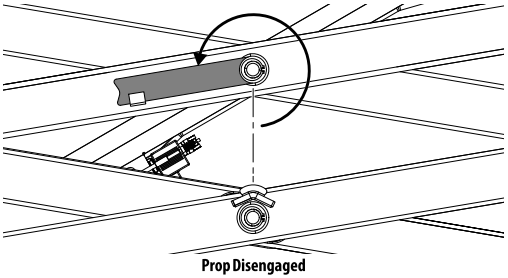

6.8 BATTERY MAINTENANCE AND CHARGING

6.8.1 Battery Maintenance and Safety Practices

Note: These instructions are for unsealed (wet) batteries only.
If machine is equipped with sealed batteries, no maintenance other than cleaning corroded battery terminals is required.

⚠ CAUTION

Ensure that battery acid does not come into contact with skin or clothing. Wear protective clothing and eyewear when working with batteries. Neutralize any battery acid spills with baking soda and water.

Battery acid releases an explosive gas while charging, allow no open flames, sparks or lighted tobacco products in the area while charging batteries. Charge batteries only in a well ventilated area.

Add only distilled water to batteries. When adding distilled water to the batteries, a non-metallic container and/or funnel must be used.

Check the electrolyte level of the batteries often, adding only distilled water when required. When fully charged, battery fluid level should be 1/8" below vent tubes.

- DO NOT fill to bottom of vent tubes.
- DO NOT allow fluid level to go below the top of the plates when charging or operating.

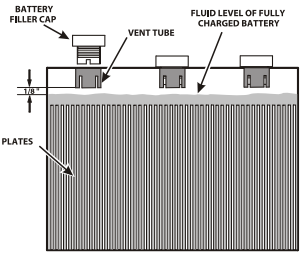

6.8.2 Delta-Q - Battery Charger

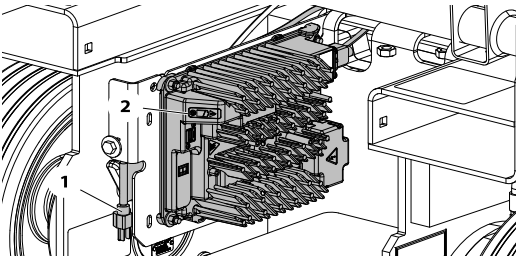

1. AC Voltage Input Plug
2. Charge Indicator LEDs

Note: Rear cross member and ladder shown removed for illustration purposes only.

- **AC Power On** - BLUE LED ON
- **Low State of Charge** - (Bottom Panel - GREEN LED Flashing) - (Top Panel - GREEN LED OFF)

- **High State of Charge** - (Bottom Panel - GREEN LED ON) - (Top Panel - GREEN LED Flashing)
- **Charge Complete** - (Bottom Panel - GREEN LED ON) - (Top Panel - GREEN LED ON)
- **Fault Indicator** - (RED LED ON)
- **External Error Condition Caution** - (AMBER LED Flashing)

6.8.3 Green Power - Battery Charger (China Only)

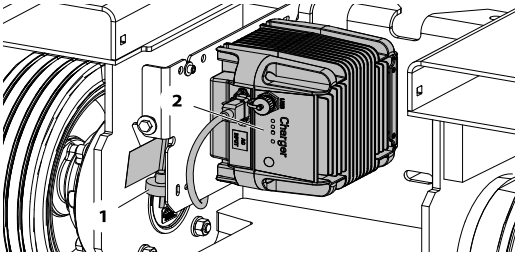

1. AC Voltage Input Cable
2. Charge Indicator LEDs

Note: Rear crossmember and ladder shown removed for illustration purposes only.

- **Battery Charging** - (YELLOW LED - AGM - Flashes Quickly /FLOODED - Remains ON/ AGM-FLOODED - Flashes Slowly)
- **Charge Complete** - (GREEN LED ON)
- **Fault Indicator** - (RED LED ON)
- **Performing Self-Diagnostic -** (YELLOW and GREEN LEDs Flashing Simultaneously)

6.8.4 Eagle Performance - Battery Charger

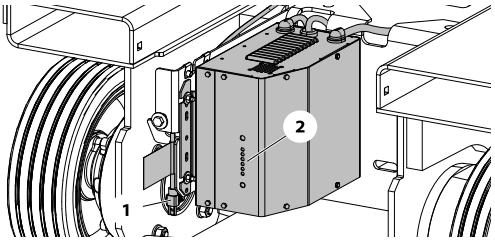

1. AC Voltage Input Cable
2. Charge Indicator LEDs

Note: Rear crossmember and ladder shown removed for illustration purposes only.

- **Battery Type Indicator** - (YELLOW LED ON)

- **Battery Charging** - (30%-60%-90% RED LED ON)
- **Charge Complete** - (GREEN LED ON)
- **No Battery Detected** - (30% RED Blinking)
- **Overall Timer Shutdown** - (30-60-90% RED LEDs Blinking)
- **Internal OverTemp Shutdown** - (30 - 90% RED LEDs Blinking)

6.9 BATTERY QUICK-DISCONNECT

Machines equipped with the battery quick disconnect allow all machine power to be easily disconnected at the battery without removing battery cables from the battery posts. To disconnect power, locate the RED quick-disconnect connector on top of the batteries inside the battery compartment and pull halves apart.



6.10 TIRES AND WHEELS

6.10.1 Tire Wear and Damage

The tire and rim assemblies installed on machines have been approved by the tire manufacturer for applications in which those products are intended to be used. The tire and rims installed on each product model have been designed for stability requirements, which consist of track width, tire compound, and load capacity. Tire changes such as rim width, centerpiece location, larger or smaller diameter, tire compound, etc., without written manufacturers approval, could result in an unsafe condition regarding stability.

The tires and rims installed on machines are to be inspected daily as part of the daily walk-around inspection. JLG requires that the daily walk-around inspection be performed at each operator change during a shift and at each shift change.

6.10.2 Wheel and Tire Replacement

JLG recommends that any replacement tire be the same size and brand as originally installed on the machine or offered by JLG as an approved replacement. Please refer to the JLG Parts Manual for the part number of the approved tires for a particular machine model.

If any of the following is discovered during tire inspection, measures must be taken to remove the JLG product from service immediately. Arrangements must be made for replacement of the tire(s) or tire assembly(s). Both tires/wheels on the same axle must be replaced:

- If the overall diameter of the tire is less than one of the following: 76 x 255 Tire – 9.5 in (243 mm) minimum

- If any uneven wear is discovered.

A tire with significant damage in the tread area or sidewall requires immediate evaluation before placing the machine into service. If a cut, tear, chunk, or other discrepancy exceeds any one or more of the following dimensions, the tire must be replaced:

3.0 in. (76 mm) long

0.75 in. (19 mm) wide

0.75 in. (19 mm) deep

- If the metal wheel is visible at any point through the tread area of the tire.
- If more than one discrepancy exists in any quadrant of the wheel (within 90 degrees of one another).

6.10.3 Wheel Installation

It is extremely important to apply and maintain proper wheel mounting torque.

⚠ WARNING

Wheel bolts must be installed and maintained at the proper torque to prevent loose wheels, a broken bolt, and possible separation of wheel from the axle.

Tighten the wheel mounting bolts to the proper torque to prevent wheels from coming loose. Use a torque wrench to tighten.

1. Install wheel (**1**) onto hub (**2**).
2. Start mounting bolts (**3**) by hand to prevent cross threading. DO NOT use a lubricant on threads.
3. Tighten bolts in the following sequence:

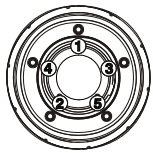

4. Tighten bolts in stages. Following the recommended sequence, tighten each bolt per wheel torque of 58 Nm (43 ft.lb.).
5. Wheel mounting bolts should be torqued after the first 50 hours of operation and after each wheel removal. Check torque every 3 months or 150 hours of operation.

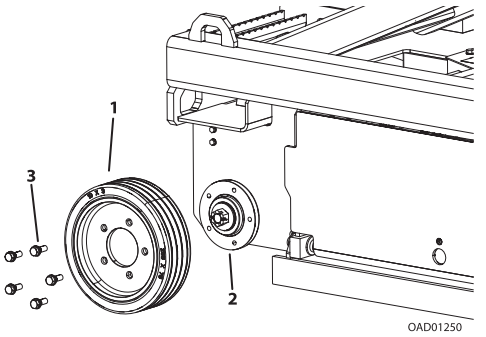

1. Wheel and Tire Assembly 2. Hub 3. Wheel Mounting Bolts (5)

6.11 DIAGNOSTIC TROUBLE CODES (DTC)

NOTICE

The DTC codes listed in the following table are not a complete listing of machine DTC codes. This listing shows only those DTC's which an operator may be able to correct due to operating error.

The DTC table following is sorted in groups by the first two digits, these digits represent the number of flashes the system distress indicator lamp will flash on the platform indicator panel when a fault occurs.

The more detailed three to five digit code numbers in the DTC column of the following tables are only indicated on a JLG handheld diagnostic analyzer connected to the machine, or on the Ground Control Station - MDI indicator, if equipped.

To troubleshoot multiple DTC's, start with the DTC with the higher first two digits.

If a correction is made during a check, conclude the check by cycling the machine power off then back on, using the emergency stop switch.

NOTICE

Should a fault occur which cannot be corrected by the operator, the problem must be referred to a mechanic qualified to repair this model of JLG lift.

DTC	Help Message	Alarm	Flash Code	Action	Trigger
001	EVERYTHING OK	None	None	• No Motion restrictions	• Platform Mode and no Faults are active.
002	GROUND MODE OK	None	None	• No Motion restrictions	• Ground Mode and no Faults are active.
003	ALARM SOUNDING – TILTED & ABOVE ELEVATION	PF: Continuous	None	• No Motion restrictions	• Platform is elevated and chassis is not level
004	DRIVING AT CUTBACK – ABOVE ELEVATION	None	None	• Drive State = CREEP	• Platform is elevated and the machine is in the drive mode of operation
005	DRIVE & LIFT UP PREVENTED TILTED & ELEVATED	PF: Continuous	None	• Drive State = PREVENTED Lift Up State = PREVENTED	• Driving and lift up are not possible since the platform is elevated and the chassis is not level.
006	LIFT UP PREVENTED – MAX HEIGHT ZONE A	None	None	• Lift Up State = PREVENTED	• The vehicle has reached the maximum height allowed by the Indoor/ Outdoor selection and further lift up motion is not possible.
007	DRIVING AT CUTBACK – POTHOLE STILL ENGAGED	None	None	• Drive State = CREEP	• While stowed, drive speed is reduced (due to lower ground clearance) since the control system detected that the pot-hole protection mechanism is deployed (failed to retract). • Clear the obstacle blocking the pot-hole protection mechanism, repair the mechanical problem, re-adjust the pot-hole limit switches, or re-pair the wiring to correct the problem. • Alternately, there may be difficulty with the Elevation Angle Sensor that causes the Control System to improperly believe the platform is stowed.

DTC	Help Message	Alarm	Flash Code	Action	Trigger
008	FUNCTIONS LOCKED OUT – SYSTEM POWERED DOWN	None	None	• Enter Safe Mode Lift Down State = PREVENTED	• A period of time elapsed without activity and the Control System entered a low-power state to preserve battery charge (2 hours). Cycle the Ground EMS in Ground Mode or the Platform EMS in Platform Mode to re-enable the vehicle. • Two hours without Drive Forward, Drive Reverse, Lift Up, Lift Down, Steer Left, or Steer Right. • Timer resets if user changes Platform Mode / Ground Mode
009	DRIVE PREVENTED – ELEVATED ABOVE DRIVE CUTOUT HEIGHT	None	None	• DriveState = PREVENTED	• The Drive Cutout functionality is enabled, and the Platform is Elevated above the Calibrated Cutout Height.
211	POWER CYCLE	None	2_1	• No Motion restrictions	• This Help Message is issued at each power-up. This serves to indicate which messages have been recorded in the failure log since the last power-up event.
212	KEYSWITCH FAULTY	None	2_1	• Force to GroundMode	• Both the Ground Select and Platform Select signals are energized, which means there is an issue with the keyswitch or one of the lines are shorted to battery.
221	FUNCTION PROBLEM – HORN PERMANENTLY SELECTED	None	2_2	• Horn Prevented	• Horn Switch in the Platform Control Box was closed during power-up. Release or repair the switch to clear the message.
2210	TRIGGER CLOSED TOO LONG WHILE IN NEUTRAL	None	2_2	• TriggerState = FALSE therefore • DriveState = PREVENTED • LiftUpState = PREVENTED • LiftDownState = PREVENTED	• Trigger Switch on the Platform Control Box was closed for more than five seconds while the Joystick (accelerator) was in the neutral position (centered). Release switch or repair the switch / wiring to clear the difficulty.

DTC	Help Message	Alarm	Flash Code	Action	Trigger
222	FUNCTION PROBLEM – INDOOR / OUTDOOR PERMANENTLY SELECTED	None	2_2	• Previously selected Indoor / Outdoor Mode maintained	• Indoor / Outdoor Switch in the Platform Control Box was closed during power-up. Release or repair the switch to clear the message.
223	FUNCTION PROBLEM – DRIVE & LIFT ACTIVE TOGETHER	None	2_2	• MoveState = LIFT • DriveState = PREVENTED • LiftUpState = PREVENTED • LiftDownState = PREVENTED	• The Drive - Lift Selector Switch indicates that both functions are selected simultaneously. Repair the wiring or switch to clear the message.
2232	FUNCTION PROBLEM – DRIVE & LIFT BOTH OPEN	None	2_2	• MoveState = LIFT • DriveState = PREVENTED • LiftUpState = PREVENTED • LiftDownState = PREVENTED	• In PlatformMode, the Drive - Lift Selector Switch indicates that neither function is selected. Repair the wiring or switch to clear the message.
224	FUNCTION PROBLEM – STEER LEFT PERMANENTLY SELECTED	None	2_2	• DriveState = PREVENTED	• Steer Left Switch in the Platform Control Box was closed during power-up. Release or repair the switch to clear the message.
225	FUNCTION PROBLEM – STEER RIGHT PERMANENTLY SELECTED	None	2_2	• DriveState = PREVENTED	• Steer Right Switch in the Platform Control Box was closed during power-up. Release or repair the switch to clear the message.
228	FUNCTION LOCKED OUT – ACCELERATOR NOT CENTERED	None	2_2	• DriveState = PREVENTED • LiftUpState = PREVENTED • LiftDownState = PREVENTED	• Selected function (Drive or Lift) is not allowed because the joystick (accelerator) was not centered at power-up. Return joystick to center momentarily.
229	FUNCTION PROBLEM – TRIGGER PERMANENTLY CLOSED	None	2_2	DriveState = PREVENTED LiftUpState = PREVENTED LiftDownState = PREVENTED	• Trigger Switch in the Platform Control Box was closed at power-up. Release switch or repair the switch / wiring to clear the difficulty.

DTC	Help Message	Alarm	Flash Code	Action	Trigger
231	FUNCTION PROBLEM – LIFT PERMANENTLY SELECTED	None	2_3	In GroundMode then • LiftUpState = PREVENTED • LiftDownState = PREVENTED	• Lift Switch (Up or Down) in the Ground Control Box was closed during power-up. Release or repair the switch to clear the message.
232	GROUND LIFT UP/DOWN ACTIVE TOGETHER	None	2_3	In GroundMode • then LiftUpState = PREVENTED • LiftDownState = PREVENTED	• In GroundMode, the control system has detected the Lift Up and Down are active simultaneously. Check the Lift Switch and associated wiring in the Ground Control Box.
242	AMBIENT TEMPERATURE SENSOR – OUT OF RANGE HIGH	PF: Continuous	2_4	• Drive and Lift Restrictions	• The temperature as communicated by the temperature/tilt sensor is greater than 185° F (85° C).
253	DRIVE PREVENTED – CHARGER CONNECTED	None	2_5	• DriveState = PREVENTED	• Driving is not possible since the vehicle is charging.
254	DRIVE & LIFT UP PREVENTED – CHARGER CONNECTED	None	2_5	• DriveState = PREVENTED • LiftUpState = PREVENTED	• Driving and Lifting are not possible since the vehicle is charging and it is configured to prevent all motion.

DTC	Help Message	Alarm	Flash Code	Action	Trigger
255	PLATFORM OVERLOADED	PF: 5000ms ON/ 2000ms OFF GND: 5000msON/ 2000ms OFF	2_5	• DriveState = PREVENTED if {TRANSPORT STATE = FALSE} • DriveState = CREEP if {MACHINE SETUP —> MARKET = JAPAN} AND {TRANSPORT STATE = TRUE} • LiftUpState = PREVENTED if {(PlatformMode = TRUE) OR (GroundMode = TRUE AND MACHINE SETUP — > LOAD = CUTOUT ALL)} • LiftDownState = PREVENTED if {(PlatformMode = TRUE) OR (GroundMode = TRUE AND MACHINE SETUP — > LOAD = CUTOUT ALL)} AND {(MACHINE SETUP —> MARKET = GB) OR (MACHINE SETUP —> MARKET = KOREA)}	• Triggers when OverloadState = TRUE • Clears when OverloadState = FALSE • While the Load Sensing System is enabled, the Platform Load measured by the Load Sensing System is excessive. Lift Up is Prevented, as well as drive above transport height. For the GB and KOREA markets, lift down is also prevented above a certain height. For the Japanese Market, Drive is limited to CREEP speeds in transport. • Refer to LSS functionality for Lift and Drive restrictions. • This fault shall be suppressed if technician navigates to the CALIBRATIONS menu of the ANALYZER.
256	DRIVE PREVENTED – POTHOLE NOT ENGAGED	PF: 500ms On/ 500ms Off GND: 500ms On/500ms Off	2_5	• DriveState = PREVENTED	• While elevated, driving is not possible since the control system detected that the pot-hole protection mechanism failed to deploy. Clear the obstacle blocking the pot-hole protection mechanism, repair the mechanical problem, re-adjust the pot-hole limit switches, or repair the wiring to correct the problem. • Alternately, there may be difficulty with the Elevation Angle Sensor that causes the Control System to improperly believe the platform is elevated.

DTC	Help Message	Alarm	Flash Code	Action	Trigger
2568	TEMPERATURE CUTOUT ACTIVE - AMBIENT TEMPERATURE TOO LOW	If Transport Mode= TRUE PF: Continuous If Transport Mode= FALSE PF: OFF	2_5	• Drive and Lift Restrictions	• The temperature as communicated by the temperature sensor located on the temperature/tilt sensor is less than or equal to {PERSONALITIES->TEMP CUTOUT->CUTOUT SET} • (See Low Temperature Cutout Functionality) • This DTC shall not be displayed in GroundMode, and no restrictions shall be implemented.
421	POWER MODULE TOO HOT - PLEASE WAIT	None	4_2	• DriveState = PREVENTED • LiftUpState = PREVENTED	• Heatsink temperature above 203°F (95° C). • **Possible Cause:** • Controller is operating in an extreme environment. • Excessive load on vehicle. • Improper mounting of controller
4235	POWER MODULE TOO HOT - REDUCED OPERATION	None	4_2	• DriveState =CREEP • LiftUpState = CREEP	• Heatsink temperature exceeded 185° F (85° C). • **Effect:** Reduced drive and brake torque. • **Possible Cause:** • Controller is performance-limited at this temperature. • Controller is operating in an extreme environment. • Excessive load on vehicle • Improper mounting of controller.

DTC	Help Message	Alarm	Flash Code	Action	Trigger
4236	POWER MODULE TOO COLD - MODULE SHUT- DOWN	None	4_2	• DriveState = PREVENTED • LiftUpState = PREVENTED	• Heatsink temperature below -40° F(-40°C). • **Possible Cause:** • Controller is operating in an extreme environment.
426	MASTER MODULE TEMPERATURE – OUT OF RANGE	None	4_2	• Normal operation	• The Ground Module's internal temperature sensor is out of range. (<104° F (40° C) or > 302° F (150° C)
441	BATTERY VOLTAGE TOO LOW – SYSTEM SHUTDOWN	None	4_4	• SafeMode • LiftDownState = PREVENTED	• Battery Voltage (VBAT) momentarily dropped below 14.5V when using flooded lead-acid batteries, or 16.0V when using AGM batteries. With a low battery charge, this can occur during heavy current demand due to Drive, Steer, or Lift Up. Recharge batteries or check for damaged batteries, sulfated batteries, or poor power connections.
442	BATTERY VOLTAGE TOO HIGH – SYSTEM SHUTDOWN	None	4_4	• Enter SafeMode • LiftDownState = MAX	• The Ground Module measured excessively high battery voltage (VBAT) (>32.0V) and de-energized the Main Line Contactor and Battery Relay to protect system devices and was unable to bring voltage down to normal operating range. This may be due to improper battery charging or incorrect voltage batteries being used.
4421	LOGIC SUPPLY VOLTAGE OUT OF RANGE HIGH	None	4_4	• Enter SafeMode • LiftDownState = MAX	• The Ground Module's VSW voltage was measured to be more than 32V. This may be caused by loose battery terminal, severely discharged batteries, a damaged battery, or an improper wire harness connection.

DTC	Help Message	Alarm	Flash Code	Action	Trigger
4424	POWER MODULE VOLTAGE TOO LOW - MODULE SHUTDOWN	None	4_4	• DriveState = PREVENTED • LiftUpState = PREVENTED	• **Severe B+ Under voltage Set:** Capacitor bank voltage dropped below Severe Under voltage limit with FET bridge enabled. • **Effect:** Reduced Drive Torque • **Possible Cause:** • Battery menu parameters are misadjusted • Non-controller system drain on battery • Battery resistance too high • Battery disconnected while driving • Blown B+ fuse or main contactor not closed
4475	POWER MODULE - BDI FAULT	None	4_4	• DriveState = PREVENTED • LiftUpState = PREVENTED	• **Pump BDI Fault Set:** BDI Percentage charge at 0% when the pump was activated. • **Effect:** ShutdownPump • Possible Cause: • Battery is fully discharged • BDI parameters are mistuned

DTC	Help Message	Alarm	Flash Code	Action	Trigger
4476	BATTERY VOLTAGE TOO HIGH – UNPLUG CHARGER	None	4_4	• Enter SafeMode • LiftDownState = MAX	• The Ground Module momentarily measured excessively high battery voltage (VBAT) (>32.0V) and entered SafeMode to protect system devices. This may be due to improper battery charging or incorrect voltage batteries being used.
4477	BATTERY VOLTAGE TOO HIGH – FORCING DISCHARGE	None	4_4	Lift Down = PREVENTED Lift Up = PREVENTED Drive = PREVENTED	• The Ground Module momentarily measured excessively high battery voltage (VBAT) (>32.0V) and entered SafeMode. This may be due to improper battery charging or incorrect voltage batteries being used.

6.12 SUPPLEMENTAL INFORMATION ONLY APPLICABLE TO CE/UKCA MACHINES

The following information is provided in accordance with the requirements of the European Machinery Directive 2006/42/EC or Supply of Machinery (Safety) Regulations 2008 No. 1597.

For electric powered machines, the equivalent continuous A-Weighted sound pressure level at the work platform is less than 70 dB(A).

The vibration total value to which the hand-arm system is subjected does not exceed 2,5 m/s^2. The highest root mean square value of weighted acceleration to which the whole body is subjected does not exceed 0,5 m/s^2.

6.13 EC DECLARATION OF CONFORMITY

Manufacturer
JLG Industries, Inc.

Address
1 JLG Drive
McConnellsburg, PA 17233 USA

Technical File
JLG EMEA B.V.
Polaris avenue 63,
2132 JH Hoofddorp
The Netherlands

Contact/Position
Senior Manager — Product Safety & Reliability

Date/Place
Hoofddorp, Netherlands

Machine Type
Mobile Elevating Work Platform

Model Type
ES1330L, ES1530L

EC-Number
2842

Certificate Number
KCEC4365

Notified Body
Kuiper Certificering b.v.

Address
Van Slingelandtstsraat 75, 7331 NM
Apeldoorn, The Netherlands

Reference Standards

- EN 55011:2009/A1:2010
- EN 61000-6-2:2005
- EN 60204-1:2018
- EN 280:2013+ A1:2015
- EN ISO 12100:2010

JLG Industries, Inc. hereby declares that the above mentioned machine conforms with the requirements of:

- 2006/42/EC — Machinery Directive
- 2014/30/EU — EMC Directive
- 2014/53/EU — RED Directive (If fitted with optional equipment)

Note: This declaration conforms with the requirements of annex II-A of the council directive 2006/42/EC. Any modification of the above described machine violates the validity of this declaration.

6.14 UKCA DECLARATION OF CONFORMITY

Manufacturer
JLG Industries, Inc.

Address
1 JLG Drive
McConnellsburg, PA 17233 USA

Technical File
JLG Industries UK Ltd
Braunstone Frith Industrial Estate
Unit 3 Sunningdale Road
Leicester, LE3 1UX
United Kingdom

Contact/Position
Director of Engineering — Europe

Date/Place
Leicester, United Kingdom

Machine Type
Mobile Elevating Work Platform

Model Type
ES1330L, ES1530L

AB-Number
0463

Certificate Number
AVUK4365

Approved Body
Amtri Veritas

Address
Pierce Street, Macclesfield, SK11 6ER, England

Reference Standards

- EN 55011:2009/A1:2010
- EN 61000-6-2:2005
- EN 60204-1:2018
- EN 280:2013+ A1:2015
- EN ISO 12100:2010

JLG Industries, Inc. hereby declares that the above mentioned machine conforms with the requirements of:

- 2008 No. 1597 - Supply of Machinery (Safety) Regulations 2008
- 2016 No. 1091 - Electromagnetic Compatibility Regulations 20165
- 2017 No. 1206 - Radio Equipment Regulations 2017 (if fitted with optional equipment)

Note: This declaration conforms with the requirements of annex II-A of the Regulations 2008 No. 1597. Any modification of the above described machine violates the validity of this declaration.

Serial Number _____

Date	Comments



Corporate Office
JLG Industries, Inc.
1 JLG Drive
McConnellsburg, PA 17233-9533 USA
(717) 485-5161 (Corporate)
(877) 554-5438 (Customer Support)
(717) 485-6417

Visit our website for JLG Worldwide Locations.
www.jlg.com



OSHKOSH™